2018 SERVICE MANUAL











SUBARU

BRZ

G4450BE

Summary

How to read the repair manual
General items IN-2

Working precautions and notes
Precautions IN-6

Setting procedures at parts replacement and removal / installation
List of procedures IN-10

Oils / Coolants
Specified oils and amounts IN-11

Specifications
FA20 engine mechanical IN-12
FA20 fuel IN-15
FA20 cooling IN-16
FA20 lubrication IN-16
FA20 starting IN-16
TX6A automatic transmission / transaxle IN-16
Clutch IN-18
TL70 manual transmission / transaxle IN-18
Drive shaft / propeller shaft IN-22
Axle and differential IN-22
Alignment / handling diagnosis IN-24
Tire / wheel IN-24
Brake system (other) IN-24
Brake (front) IN-25
Brake (rear) IN-25
Parking brake IN-25
Steering column IN-25
Steering gear / linkage IN-25
FA20 battery / charging IN-26
Heating / air conditioning IN-26

Troubleshooting procedures for ECM control system
Explanation of basic diagnostic procedures IN-27
Malfunction analysis using check list for interview IN-28
Malfunction symptoms and DTC check IN-30
Procedures for malfunction phenomenon simulation IN-32
List of diagnostic codes IN-33
Symptom table IN-34
Inspection flow by DTC system IN-35
Inspection procedures for electrical circuits and how to perform IN-36

Terminology list
Abbreviations IN-43

How to read the repair manual

General items

1. Explanation scope of repair procedures
   (1) The repair procedures are divided into the following three main types of procedures: [Diagnosis], [Removal/Installation, Replacement, Disassembly/Assembly and Inspection/Adjustment], and [Final Inspection].
   (2) Although a description of the following elemental procedures has been omitted from this manual, they should be performed with the actual procedures.
      (a)Jacking and lifting procedures
      (b)Cleaning of removed parts as necessary
      (c)Visual inspection
2. Preparation items
   (1) The preparation items that should be prepared before starting the procedures, such as SSTs, general tools and lubricant are listed in the preparation items section. However, preparation items that are considered to be of general use for repair procedures (such as tool stands, jacks and rigid racks) are omitted.
3. Procedures
   (1) The exploded view shows the corresponding sections and titles as necessary.
   (2) The exploded view includes descriptions of non-reusable parts, grease application locations, pre-coated bolts and tightening torques.

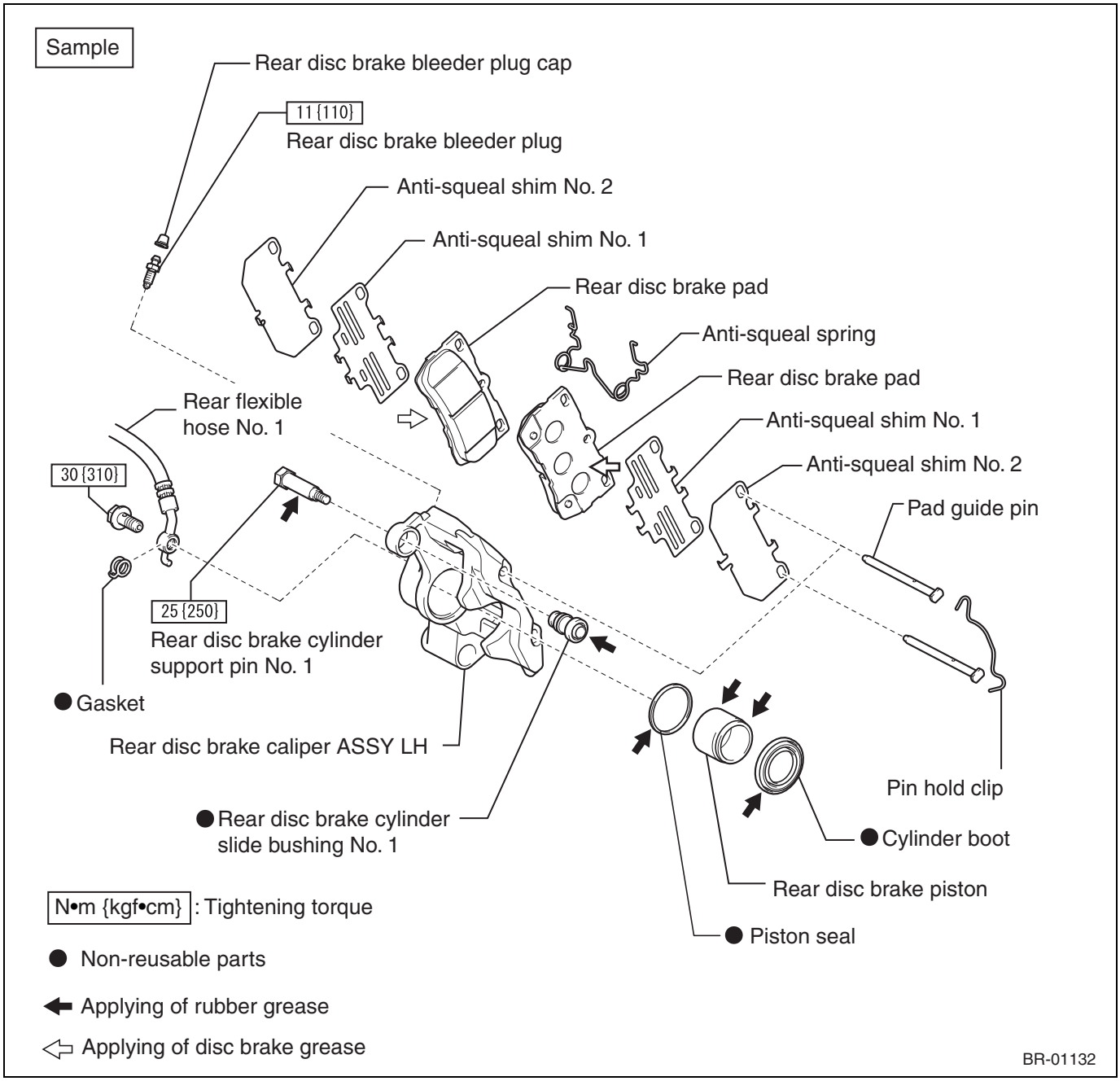

(3) Tightening torque, lubrication locations and non-reusable parts are described as the essential points of the procedures.
CAUTION:
If the above items can only be indicated in an illustration, an exploded view with these essentials is included. In such cases, all information such as torque and lubrication is included within the illustration.

(4) Procedures only describe essential items, with the location and contents of procedures included in an illustration, as well as detailed procedures, standard values, or precautions explained using text.

(5) In some cases, a single illustration is common to various similar models. For that reason, the actual vehicle may differ in their exact details.

Sample

Illustration: Target part and work

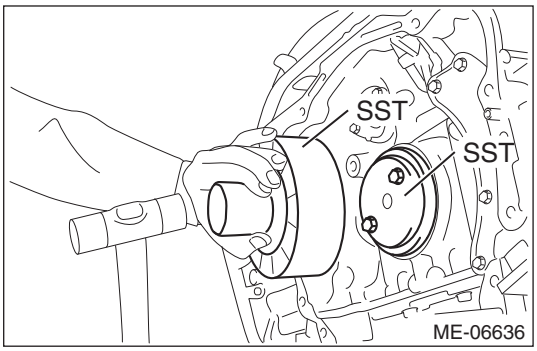

Description: Details of work method

Work item

1. Engine rear oil seal: seal installation
   (1) Clean the contact surface of the crankshaft oil seal.
   (2) Apply slight engine oil to the lip of a new engine rear oil seal.
   (3) Using SST, strike in the new engine rear oil seal so that it is flush with the end surface of the engine rear oil seal retainer.

SST 18671AA020, 18657AA030
<Caution> ← SST part number

- Do not strike in the engine rear oil seal obliquely.
- Do not deform the engine rear oil seal.
- Do not strike in the engine rear oil seal excessively.

<Note>
At striking in, the protrusion length of the engine rear oil seal is allowed 0 to -0.5 mm from the end surface of the engine rear oil seal retainer.

IN-03274

4. How to read the repair standard values
   (1) Standard values and limits are printed in bold text.
5. Definitions of terms

Standard value	Indicates the tolerance range during inspection and adjustment.
Limit	Indicates the maximum or minimum value that cannot be surpassed during inspection and adjustment.
Reference value	If the measurement method for determining the standard value is quite difficult, this indicates a standard value for an easy measurement method when there is no possibility that a malfunction will occur.
<Warning>	Used to indicate that there is a danger of injury to the personnel performing the procedures or other personnel, and indicate that there is a danger of injury or accident if the instructions are not followed.
<Caution>	Used to indicate special precautions that must be taken regarding items and procedures that must be performed because failure to perform them will result in damage to the vehicle or parts.
<Note>	Used to indicate supplemental explanations separate from the current text in order to make procedures easier to perform/understand.

6. SI units
   (1) The units used in this manual are SI units (International System of Units), and are as described in the following format of meters and yards/pounds.
   (Ex.)
   Standard value:T=28N·m {286kgf·cm} {20.7ft·lbf}

SI units conversion factors table

Item	SI unit	Traditional unit	SI unit conversion factor
Speed	m/s^2	G	9.80665
Torque, moment	N·m	kgf/cm	0.0980665
Power	N	kgf	9.80665
Pressure	MPa	kgf/cm^2	0.0980665
	kPa	mmHg	0.133322
Power (work rate), work efficiency	kW	PS	0.735499
	W	kcal/h	1.16279
Cubic volume	cm^3	cc	1
Spring constant	N/mm	kgf/mm	9.80665

SI prefixes

M (mega)	10^6	d (deci)	10^{-1}=0.1
K (kilo)	10^3	c (centi)	10^{-2}=0.01
H (hecto)	10^2	m (milli)	10^{-3}=0.001

Da (deca)	10^{1}	μ(micro)	10^{-6}=0.000001

Working precautions and notes

Precautions

1. SRS airbags and seat-belt pretensioner
   (1) Precautions for handling and procedures
      (a) Failure to properly perform work according to procedures for the SRS airbag and pretensioner system can result in these components operating while handling them and cause a serious life-threatening accident. Additionally, failure to repair this system correctly can result in the inability to function properly. Read the following items carefully before servicing a vehicle (removal/installation, inspection, or replacement of parts) and perform the proper procedures as described in this manual.
   (2) Disconnection of the battery ground terminal
      CAUTION:
      Power windows have an index function that slightly opens/closes window glass when a door is opened/closed. Disconnect the battery ground (negative) terminal with the driver's and passenger's doors opened (window glass lowered to a position where door opening/closing is not a problem). The molding will be damaged if the battery ground terminal is disconnected with the window glass completely closed and a door is opened/closed.
      (a) Procedures consist of checking the diagnostic code, turning the key to IG OFF, disconnecting the battery ground terminal, and waiting 60 seconds or more before starting any other procedure.
         1. An airbag could operate if any procedures are performed within 60 seconds of disconnecting the battery ground terminal because the SRS airbag and pretensioner system is equipped with a backup power source.
         2. Make note of the memory contents of each system before disconnecting the battery ground terminal as the memory of some systems might be deleted when disconnected. Restore the system setting after the service procedure.
   (3) General precautions regarding the SRS airbag and pretensioner system
      (a) Use an electrical tester for electrical inspections.
      (b) Precautions for system surroundings are as indicated on corresponding labels.
      (c) Never disassemble this system.
      (d) Replace any parts with new genuine parts if they have been dropped, cracked, dented, chipped or deformed in any way.
      (e) Never use SRS airbag and pretensioner parts from other vehicles. Be sure to always replace with new parts if replacement is necessary.
      (f) Do not directly expose to high heat or open flame.
      (g) Always inspect using diagnostics even if SRS airbag and pretensioner parts have not operated in a collision.
      (h) Do not allow grease, cleanser, oil, water or other substances to adhere to system parts. If any substance adheres, wipe off immediately using a dry soft cloth.
      (i) Store and handle in locations not subject to high temperature (85°C {185°F} or more) or high humidity, and where less affected by electrical noise.
      (j) Always use the SSTs to make SRS airbag and pretensioner operate when disposing of a vehicle or individual parts.
         NOTE:
         - Disposal of driver's airbag module
         - Disposal of passenger's airbag module
         - Disposal of curtain airbag module
         - Disposal of side airbag module
         - Disposal of seat-belt pretensioner
      (k) Never measure the resistance of SRS airbag and pretensioner parts.
         WARNING:
         Doing so is extremely dangerous as the tester current could result in SRS airbag and pretensioner operation.
      (l) Always inspect the airbag warning light after inspecting, removing/installing or replacing SRS airbags and sensors.
   (4) Precautions regarding disposal of SRS airbag and pretensioner (before operating)
      (a) Never dispose of any parts that have not operated.
      (b) Perform SRS airbag and pretensioner operations outdoors on level ground where safety can be ensured. Try to avoid performing operations in residential and similar areas.
      (c) Before operating, advise all persons nearby as operation of an SRS airbag and pretensioner results in a loud noise.
      (d) Use the corresponding SSTs if operating an SRS airbag and pretensioner, and remain at a distance of five meters or more from the SRS airbag and pretensioner.

(e)Before performing procedures, touch a water pipe or steel frame with a bare hand to discharge any static electricity as it could cause the SRS airbag and pretensioner to operate.
(f) Be careful to prevent the deploying side of an airbag to be operated to face downward.

(5) Precautions regarding disposal of SRS airbag and pretensioner (after operating)
(a)Leave an operated SRS airbag and pretensioner as is for 30 minutes or more as some parts can reach extremely high temperatures (few hundred C° or more).
(b)Do not sprinkle water or otherwise try to cool an operated SRS airbag and pretensioner.
(c)Wear dustproof safety goggles and gloves when handling an operated SRS airbag and pretensioner.
(d)Place an operated SRS airbag and pretensioner in a strong clear vinyl bag and seal the bag before disposal.
(e)Be sure to always wash your hands after performing disposal procedures.

(6) Precautions for driver's, passenger's, side and curtain airbag modules
(a)Always maintain removed airbags with the deployment side facing upward even if removed for a short time.
WARNING:
Operation of an airbag for any reason with the deployment side facing downward can result in a serious life-threatening accident.
(b)When storing, do not place anything on top of an airbag and do not stack airbags on top of each other.

(7) Precautions for seatbelt pretensioners
(a)Do not touch the area around the belt winding parts even if removed for a short time.
WARNING:
Operation of a pretensioner for any reason can cause the belt to be wound resulting in a serious life-threatening accident.
(b)When storing, do not place anything on top of a pretensioner and do not stack pretensioners on top of each other.

(8) Precautions for roll connectors
(a)Always perform roll connector centering when installing a roll connector or removing/installing the steering wheel.
CAUTION:
The roll connector could suffer an open circuit if the steering wheel is operated without performing centering.

(9) Precautions for airbag CM, front sub-sensor, side airbag sensor ASSY, airbag door sensor, side airbag sensor and satellite safing sensor
(a)Always replace the sensor ASSY (airbag CM, front sub-sensor, side airbag sensor and satellite safing sensor) if an SRS airbag and pretensioner have operated (including if only the SRS airbag or pretensioner has operated) due to collision.

(10) Precautions for wire harnesses and connectors
(a)Wire harnesses have a uniform yellow color except for hidden portion in the engine room.
(b)Be very careful when handling special connectors that have been adopted.

(11) Handling of vehicles that have been in crashes or otherwise subjected to collision
(a)If using electrical welding equipment, remove the SRS airbags and pretensioners before performing any work.
(b)Remove the airbag CM, front sub-sensor, side airbag sensor and satellite safing sensor before performing work if these might be subject an impact.
(c)Do not expose the airbag CM, front sub-sensor, side airbag sensor and satellite safing sensor to high temperatures.
(d)Check surrounding wire harnesses and connectors for damage and melt as an SRS airbag and pretensioner become extremely hot (few hundred °C or more) in some parts when operated.

(12) Cases where it is necessary to inspect an SRS airbag and pretensioner
(a)If a vehicle has been damaged such as due to a collision including cases where the SRS airbags and pretensioners have not operated.
(b)Cases where a diagnostic code for the SRS airbag system has been output.

2. Basic items
(1) Battery terminal removal/installation
CAUTION:
Power windows have an index function that slightly opens/closes window glass when a door is opened/closed. Disconnect the battery ground (negative) terminal with the driver's and passenger's doors opened (window glass lowered to a position where door opening/closing is not a problem). The molding will be damaged if the battery ground terminal is disconnected with the window glass completely closed and a door is opened/closed.

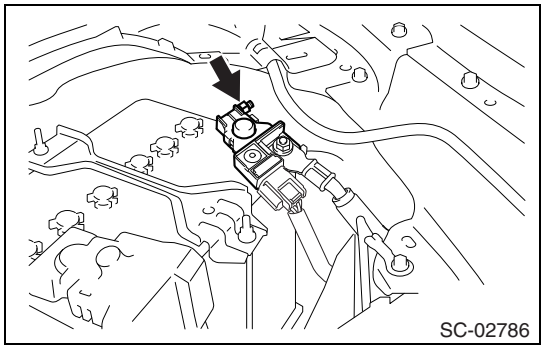

(a)If performing any electric system procedures, disconnect the battery ground terminal before starting in order to prevent burn out caused by short circuit.

(b)If removing/installing the battery ground terminal, turn the key to IG OFF and the lighting switch to OFF, and completely loosen the terminal nut so as not to pry the terminal.

(c)Make note of the memory contents before disconnect the battery ground terminal as doing so deletes the memory of the diagnostic and other systems.

(d)Reconnect the battery ground terminal.

Standard value:T=6.0N·m {61kgf·cm} {4.4 ft·lbf}

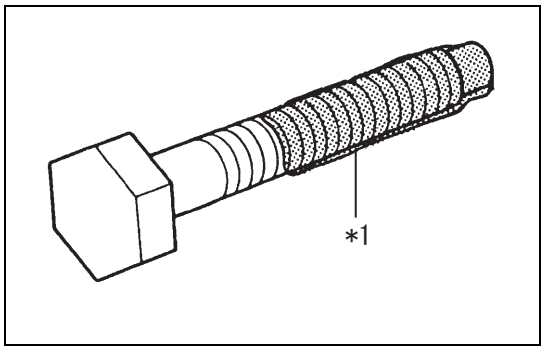

(2) Pre-coated bolts

(a)Pre-coated bolts are bolts to which a thread-locking agent has been applied on the bolt thread.

Captions in illustration

*1	Thread-locking agent

(b)Use the specified adhesive to pre-coat a bolt when re-tightening, loosening or otherwise moving one.

CAUTION:

A torque check is performed using the lower limit value of the tightening torque tolerance range.

(c)If reusing a pre-coated part, remove all old adhesive from bolts and threaded holes, degrease, and dry using compressed air. Apply the specified thread-locking agent to the bolt thread and tighten to the specified torque.

(d)Depending on the thread-locking agent that is applied, some time might be required to allow the agent to harden.

(3) Gasket

(a)Use sealant with gaskets as necessary to prevent leakage.

(4) Bolts, nuts and screws

(a)Check the tightening torques of bolts, nuts and screws, and always use a torque wrench to tighten.

(b)Check for foreign material (such as burrs or film) on the tightening seating surface.

(5) Tightening when using a torque wrench extension

(a)If the overall length when tightening is increased due to using a torque wrench in combination with an SST or other tool, the actual torque will be excessive if you tighten it to the specified torque shown on the torque wrench.

(b)This manual only indicates the specified tightening torque. If using an SST or extension, it is necessary to use the following formula to calculate the proper torque wrench reading.

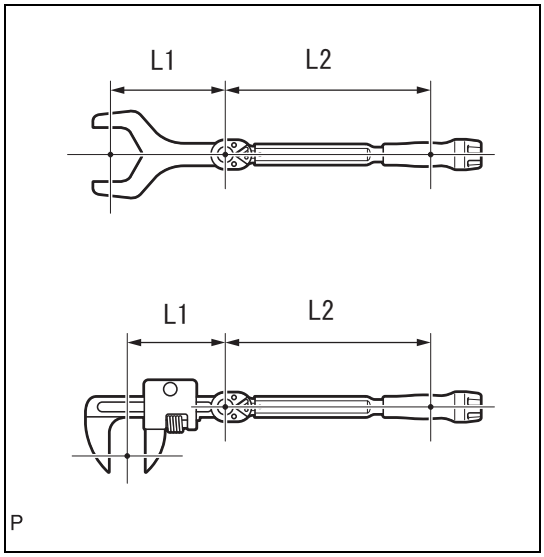

(c) Formula T'=T×L2/(L1+L2)

T'	Torque wrench reading [N·m{kgf/cm}]
T	Specified tightening torque [N·m{kgf/cm}]
L1	Length of SST or tool [cm]
L2	Torque wrench length [cm]

(6) Removal/Installation of fuel system parts

(a) Location for removal/installation of fuel system parts

1. Perform procedures in a location with good ventilation, and where there are no sources of flame/sparks present nearby such as welding equipment, grinders, drill, electric motors or heaters.
2. Do not perform procedures in or near a pit as it can become filled with vaporized fuel.

(b) Removal/Installation of fuel system parts

1. Prepare a fire extinguisher before starting procedures.
2. In order to prevent static electricity discharge, attach a grounding wire to the fuel changer, vehicle, fuel tank or similar part and sprinkle a small amount of water underfoot (not enough to be slippery)
3. Do not use electrical equipment such as an electric pump or work lights, as these can generate sparks or cause high temperature.
4. Do not use a steel hammer or similar tool as these can generate sparks.
5. Keep cloths with fuel adhered separate from other cloths, and then dispose properly.

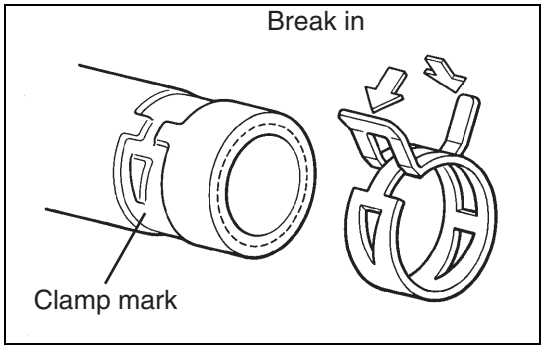

(7) Hose clamp handling

(a) Before removing a hose, check the hose insertion depth and clamp position so that it can be securely restored.

(b) Replace any deformed or deteriorated clamps with a new part.

(c) After installation of a plate-spring clamp, apply force in the directions of the arrows to make the clamp well fitted.

Setting procedures at parts replacement and removal / installation

List of procedures

1. List of replacement procedures

Replaced parts and procedures	Required procedures	Possible phenomena/unavailable functions (unless required procedure is performed)	Reference pages
Engine control computer	1. ID code registration	• Engine start inoperable	Refer to "Registration manual for immobilizer" for registration procedures.
• Transmission control computer ASSY • Automatic transmission ASSY • Transmission valve body ASSY • Transmission wire • Each solenoid • Engine ASSY	1. AT learning values initialization	• High revving of engine • Large shift shock	AT - 19
• Brake actuator ASSY • Steering sensor • Steering column ASSY • Rack & pinion power steering gear ASSY • Front wheel alignment adjustment	1. VSC sensor mid point setting	• VSC system does not operate normally (warning light is illuminated)	BC - 15
Power steering computer ASSY	1. Steering zero point calibration.	• P/S warning light illumination • EPS control	PA - 12
Steering column ASSY	1. Steering zero point calibration.	• Different left/right steering control force	PA - 12
With smart entry • Electrical key transmitter SUB-ASSY • ID CODE BOX (IMMOBILIZER CODE ECU) • Smart key computer ASSY (collation ECM) • Steering lock actuator ASSY (steering lock ECM)	1. ID code registration	• Wireless function • Smart function • Engine start inoperable	Refer to "Registration manual for immobilizer" for registration procedures.
No smart entry • Key • Main body ECM (network gateway computer) • TRANSPONDER KEY ECM • Combination meter ASSY	1. ID code registration	• Engine start inoperable	Refer to "Registration manual for immobilizer" for registration procedures.
• Power window regulator motor ASSY (RH, LH) • Front door window regulator SUB-ASSY RH (RH, LH) • Front door glass SUB-ASSY (RH, LH), front door frame SUB-ASSY RR LWR (RH, LH) or front door sash (RH, LH) • Front door opening trim weather strip (RH, LH)	1. Power window system initialization	• Door glass automatic opening/closing function • Anti-pinching function • Operating functions after key OFF (IG OFF) • Seat remote operation using driver's seat switch	WS - 5
• Main body ECM (network gateway computer)	1. Customize	• Functions are inoperable	PD - 23

Oils / Coolants

Specified oils and amounts

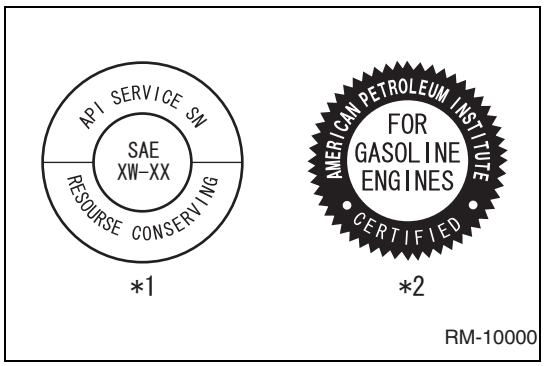

1. Engine oil
   (1) Specified oil

Viscosity grade	Quality grade
0W-20 (synthetic oil)	For API certified: Products with SN "Resource Conserving" logos.
	For ILSAC certified: Products with GF-5 "Starburst mark" displayed on the container.

Captions in illustration

*1	API mark
*2	Starburst mark

CAUTION:
- Use 0W-20 (synthetic oil).
- When replacing the oil, it is acceptable to use a different brand oil but Subaru-specified engine oil should be used.

   (2) Amount

Engine type	Only replacing oil Filling amount (L {US qt, Imp qt})	Oil and oil filter Filling amount at oil replacement (L {US qt, Imp qt})
FA20	5.2 {5.5, 4.6}	5.4 {5.7, 4.8}

NOTE:
The filling amount at engine oil replacement is the value when oil is drained from the drain plug.

2. Oils/Coolants other than engine oil

CAUTION:
- For AT, using any ATF other than recommended product may cause malfunctions. Be sure to use the recommended product.
- Using a substitute product as the transmission gear oil may cause the function and performance of the transmission to deteriorate.

Item [Type]	Amount (L {US qt, Imp qt}) (reference value)	Recommended product	Substitute product
Coolant [FA20]	7.5 {7.9, 6.6} (AT)	SUBARU Super Coolant (Diluted type)	-
	7.2 {7.6, 6.3} (MT)		
Automatic transmission fluid [TX6A]	7.5 {7.9, 6.6}	Auto fluid WS	-
Manual transmission oil [TL70]	2.2 {2.3, 1.9}	MG gear oil special II (API GL-3, SAE 75W-90)	GL-3 or later (75W-90)
Rear differential oil	1.1 to 1.2 {1.1 to 1.3, 1.0 to 1.1}	Differential gear oil LX (API GL-5, SAE 75W-85)	GL-5 (75W-85 or 75W-90)
Clutch fluid	-	FMVSS No.116 DOT3 or DOT4	-
Brake fluid	-	FMVSS No.116 DOT3 or DOT4	-
A/C compressor oil	-	ND-OIL8	-

SPECIFICATIONS

FA20 ENGINE MECHANICAL

SERVICE DATA

Ignition timing	2 to 22° BTDC at idle (Transmission in neutral)		
Idle speed	Automatic transmission (in neutral)		600 to 800 r/min
	Manual transmission		550 to 750 r/min
Compression	Compression pressure	1150 to 1750 kPa (11.7 to 17.8 kgf/cm2, 167 to 254 psi)	
	Difference between each cylinder	200 kPa (2.0 kgf/cm^2, 29 psi) or less	
Cam clearance	Standard (Cold)	Intake	0.10 to 0.15 mm (0.0039 to 0.0059 in.)
		Exhaust	0.20 to 0.24 mm (0.0079 to 0.0094 in.)
Camshaft	Circle runout	Maximum	0.020 mm (0.00079 in.)
	Cam lobe height	Intake	40.40 to 40.50 mm (1.5905 to 1.5945 in.)
		Exhaust	40.72 to 40.82 mm (1.6031 to 1.6071 in.)
		For fuel pump	38.95 to 39.05 mm (1.5335 to 1.5374 in.)
	Cam base circle	Intake	34.0 mm (1.3386 in.)
		Exhaust	34.0 mm (1.3386 in.)
	Journal diameter		25.946 to 25.963 mm (1.02149 to 1.02216 in.)
	Thrust clearance		0.068 to 0.116 mm (0.00027 to 0.00457 in.)
	Oil clearance		0.037 to 0.072 mm (0.00146 to 0.00283 in.)
Cylinder head sub-assembly	Warpage	Maximum	0.020 mm (0.00079 in.)
	Cylinder head height	Standard	98.5 mm (3.878 in.)
		Minimum	98.4 mm (3.874 in.)
Intake valve	Overall length		104.95 mm (4.1319 in.)
	Margin thickness		0.8 to 1.2 mm (0.0315 to 0.0472 in.)
	Valve stem diameter		5.455 to 5.470 mm (0.2148 to 0.2154 in.)
	Valve seat width		0.8 to 1.6 mm (0.032 to 0.063 in.)
Exhaust valve	Overall length		97.57 mm (3.8413 in.)
	Margin thickness		1.0 to 1.4 mm (0.039 to 0.055 in.)
	Valve stem diameter		5.445 to 5.460 mm (0.21437 to 0.21496 in.)
	Valve seat width		1.1 to 1.7 mm (0.043 to 0.067 in.)
Intake valve guide bush	Inside diameter		5.500 to 5.512 mm (0.21654 to 0.21701 in.)
	Oil clearance		0.030 to 0.057 mm (0.00118 to 0.00224 in.)
	Protrusion height		11.4 to 11.8 mm (0.449 to 0.466 in.)
Exhaust valve guide bush	Inside diameter		5.500 to 5.512 mm (0.21654 to 0.21701 in.)
	Oil clearance		0.040 to 0.067 mm (0.00157 to 0.00264 in.)
	Protrusion height		11.4 to 11.8 mm (0.449 to 0.466 in.)

Valve adjusting shim	Valve stem end diameter	Intake	5.455 to 5.470 mm (0.21476 to 0.21535 in.)
		Exhaust	5.445 to 5.460 mm (0.21437 to 0.21496 in.)
	Valve adjusting shim inside diameter		5.500 to 5.560 mm (0.21654 to 0.21890 in.)
	Oil clearance	Intake	0.030 to 0.105 mm (0.00118 to 0.00413 in.)
		Exhaust	0.040 to 0.115 mm (0.00157 to 0.00453 in.)
Valve spring	Free length		41.06 mm (1.617 in.)
	Deviation	Maximum	Less than 1.8 mm (0.0710 in.)
	Angle	Maximum	2.5°
Cylinder block	Warpage	Maximum	0.025 mm (0.00098 in.)
	Cylinder block height	Standard	205.0 mm (8.071 in.)
		Minimum	204.9 mm (8.067 in.)
	Cylinder bore diameter	Mark A	86.005 to 86.015 mm (3.38602 to 3.38641 in.)
		Mark B	85.995 to 86.005 mm (3.38562 to 3.38602 in.)
		Maximum (When boring)	86.505 mm (3.40570 in.)
Cylinder bore	Cylindricity		0.030 mm (0.00118 in.)
	Circularity		0.030 mm (0.00118 in.)
Piston	Piston diameter	Distance from piston head	39.4 mm (1.551 in.)
		A grade	85.985 to 85.995 mm (3.38523 to 3.38562 in.)
		B grade	85.975 to 85.985 mm (3.38484 to 3.38523 in.)
		0.25 mm (0.0098 in.) over size	86.225 to 86.245 mm (3.39468 to 3.39547 in.)
		0.50 mm (0.0197 in.) over size	86.475 to 86.495 mm (3.40452 to 3.40531 in.)
	Oil clearance		0.010 to 0.030 mm (0.00039 to 0.00118 in.)
Piston pin	Piston pin oil clearance		0.004 to 0.008 mm (0.00016 to 0.00031 in.)
	Connecting rod bushing oil clearance		0.006 to 0.026 mm (0.00024 to 0.00102 in.)
Piston ring	Piston ring end gap	No. 1	0.20 to 0.25 mm (0.00784 to 0.00984 in.)
		No. 2	0.60 to 0.70 mm (0.02362 to 0.02756 in.)
		Oil ring	0.10 to 0.35 mm (0.00394 to 0.01378 in.)
	Groove clearance	No. 1	0.030 to 0.080 mm (0.00118 to 0.00315 in.)
		No. 2	0.030 to 0.070 mm (0.00118 to 0.00276 in.)

IN

Connecting rod	Bend	Maximum	0.10 mm (0.0039 in.) per 100 mm (3.937 in.) in length
	Twist	Maximum	0.10 mm (0.0039 in.) per 100 mm (3.937 in.) in length
	Thrust clearance		0.070 to 0.330 mm (0.00276 to 0.01299 in.)
	Oil clearance		0.025 to 0.055 mm (0.00098 to 0.00217 in.)
	Bearing size (Thickness at center)	Standard	1.492 to 1.508 mm (0.05874 to 0.05937 in.)
		0.03 mm (0.0012 in.) Undersize	1.511 to 1.515 mm (0.05949 to 0.05965 in.)
		0.05 mm (0.0020 in.) Undersize	1.521 to 1.525 mm (0.05988 to 0.06004 in.)
		0.25 mm (0.0098 in.) Undersize	1.621 to 1.625 mm (0.06382 to 0.06398 in.)
	Crank pin diameter	Standard	49.976 to 50.000 mm (1.96756 to 1.96850 in.)
		0.03 mm (0.0012 in.) Undersize	49.946 to 49.970 mm (1.96637 to 1.96732 in.)
		0.05 mm (0.0020 in.) Undersize	49.926 to 49.950 mm (1.96559 to 1.96653 in.)
		0.25 mm (0.0098 in.) Undersize	49.726 to 49.750 mm (1.95771 to 1.95866 in.)

Crankshaft	Circle runout	Maximum	0.035 mm (0.00138 in.)
	Crank pin taper	Maximum	0.006 mm (0.00024 in.)
	Crank pin out-of-runout	Maximum	0.005 mm (0.00020 in.)
	Crankshaft journal taper	Maximum	0.006 mm (0.00024 in.)
	Crankshaft journal out-of-runout	Maximum	0.005 mm (0.00020 in.)
	Crank pin diameter	Minimum	49.726 mm (1.9577 in.)
	Crankshaft journal diameter	Minimum	67.735 mm (2.66673 in.)
	Connecting rod bearing thickness (at center)	Standard	1.492 to 1.508 mm (0.05874 to 0.05937 in.)
		0.03 mm (0.0012 in.) Undersize	1.511 to 1.515 mm (0.05949 to 0.05965 in.)
		0.05 mm (0.0020 in.) Undersize	1.521 to 1.525 mm (0.05988 to 0.06004 in.)
		0.25 mm (0.0098 in.) Undersize	1.621 to 1.625 mm (0.06382 to 0.06398 in.)
	No. 1 to No. 4 crank bearing thickness (at center)	Standard	2.498 to 2.513 mm (0.09835 to 0.09894 in.)
		0.03 mm (0.0012 in.) Undersize	2.519 to 2.522 mm (0.09917 to 0.09929 in.)
		0.05 mm (0.0020 in.) Undersize	2.529 to 2.532 mm (0.09957 to 0.09968 in.)
		0.25 mm (0.0098 in.) Undersize	2.629 to 2.632 mm (0.10350 to 0.10362 in.)
	No. 5 crank bearing thickness (at center)	Standard	2.496 to 2.511 mm (0.09827 to 0.09886 in.)
		0.03 mm (0.0012 in.) Undersize	2.517 to 2.520 mm (0.09909 to 0.09921 in.)
		0.05 mm (0.0020 in.) Undersize	2.527 to 2.530 mm (0.09949 to 0.09961 in.)
		0.25 mm (0.0098 in.) Undersize	2.627 to 2.630 mm (0.10342 to 0.10354 in.)
	Crank pin outer diameter	Standard	49.976 to 50.000 mm (1.96756 to 1.96850 in.)
		0.03 mm (0.0012 in.) Undersize	49.946 to 49.970 mm (1.96637 to 1.96734 in.)
		0.05 mm (0.0020 in.) Undersize	49.926 to 49.950 mm (1.96559 to 1.96653 in.)
		0.25 mm (0.0098 in.) Undersize	49.726 to 49.750 mm (1.95771 to 1.95866 in.)
	Crankshaft journal diameter	Standard	67.985 to 68.003 mm (2.67657 to 2.67728 in.)
		0.03 mm (0.0012 in.) Undersize	67.955 to 67.979 mm (2.67539 to 2.67633 in.)
		0.05 mm (0.0020 in.) Undersize	67.935 to 67.959 mm (2.67460 to 2.67555 in.)
		0.25 mm (0.0098 in.) Undersize	67.735 to 67.759 mm (2.66673 to 2.66767 in.)
	Thrust clearance		0.130 to 0.308 mm (0.00512 to 0.01213 in.)
	Oil clearance		0.013 to 0.031 mm (0.00051 to 0.00122 in.)

FA20 FUEL

SERVICE DATA

Fuel pressure	350 to 500 kPa (4.0 to 5.0 kgf/cm^2, 51 to 72 psi)
Fuel tank capacity	50L (13.2 US gal, 11.0 Imp gal)

IN

FA20 COOLING

SERVICE DATA

Radiator Cap	Pumping speed: 1 pump per second Standard valve (for brand-new cap): 93 to 123 kPa (0.95 to 1.25 kgf/cm^2, 14 to 18 psi) Minimum standard valve (after suing cap): 83 kPa (0.85 kgf/cm^2, 12 psi)
Thermostat (for Engine Coolant)	Valve opening temperature: 86 to 90°C (187 to 194°F)
	Valve lift: 8 mm (0.315 in.) or more at 95°C (203°F)
Thermostat (for Automatic Transmission)	Valve opening temperature: 48 to 52°C (118 to 126°F)
	Valve lift: 6.0 mm (0.236 in.) or more at 63°C (145°F)

FA20 LUBRICATION

SERVICE DATA

Oil pressure	Idle: 50 kPa (0.5 kgf/cm2, 7.3 psi) or more at 80°C (176°F)
	6000 rpm: 350 kPa (3.6 kgf/cm2 , 51 psi) or more at 80°C (176°F)

FA20 STARTING

SERVICE DATA

Starter assembly	Standard current		Below 90 A at 11.5 V
Starter armature assembly	Standard runout	for Manual Transmission	0.05 mm (0.002 in.)
		for Automatic Transmission	0.02 mm (0.0008 in.)
	Maximum runout	for Manual Transmission	0.10 mm (0.004 in.)
		for Automatic Transmission	0.05 mm (0.002 in.)
	Standard depth Segment - Mold	for Manual Transmission	0.05 mm (0.002 in.)
		for Automatic Transmission	0.7 mm (0.0276 in.)
	Minimum depth Segment - Mold	for Automatic Transmission	0.20 mm (0.0079 in.)
	Standard diameter	for Automatic Transmission	29 mm (1.1417 in.)
	Minimum diameter	for Automatic Transmission	28 mm (1.1024 in.)
Brush length	Standard length	for Manual Transmission	12.3 mm (0.484 in.)
		for Automatic Transmission	14.4 mm (0.5669 in.)
	Minimum length	for Manual Transmission	7.0 mm (0.276 in.)
		for Automatic Transmission	9.0 mm (0.3543 in.)
	Standard brush spring force	for Manual Transmission	15.9 to 19.5 N (1.6 to 2.0 kgf, 3.6 to 4.4 lbf)
	Minimum brush spring force	for Manual Transmission	2.5 N (0.3 kgf, 0.6 lbf)

TX6A AUTOMATIC TRANSMISSION / TRANSAXLE

SERVICE DATA

Line pressure (Fluid temperature): 50 to 80°C (122 to 176°F) Engine idling	D position	350 to 430 kPa (3.6 to 4.4 kgf/cm^2, 51 to 62 psi)
	R position	760 to 950 kPa (7.7 to 9.7 kgf/cm^2, 110 to 138 psi)
Line pressure (Fluid temperature): 50 to 80°C (122 to 176°F) At stall speed (Throttle valve fully open)	D position	1200 to 1380 kPa (12.5 to 14.0 kgf/cm^2, 174 to 200 psi)
	R position	1410 to 1630 kPa (14.4 to 16.6 kgf/cm^2, 204 to 236 psi)
Engine stall speed	D position	2350 +/- 250 r/min
Time lag	N →D position	Less than 1.2 seconds
	N →R position	Less than 1.5 seconds
Drive plate runout	Maximum	0.30 mm (0.0118 in.)

SERVICE DATA (Automatic Transmission Unit:)

1st and reverse return spring free length	Standard: 23.74 mm (0.935 in.)
Rear planetary gear pinion thrust clearance	Standard: 0.2 to 0.6 mm (0.00788 to 0.0236 in.)
Rear planetary gear bushing inside diameter	Standard: 18.025 mm (0.710 in.)

1st and reverse brake pack clearance	0.5 to 0.8 mm (0.0197 to 0.0315 in.)
Flange thickness (1st and reverse brake)	Mark 0: 0 mm (0 in.) Mark 1: 0.17 mm (0.00669 in.) Mark 3: 0.31 mm (0.0122 in.) Mark 4: 0.45 mm (0.0177 in.) Mark 5: 0.59 mm (0.0232 in.) Mark 7: 0.73 mm (0.0287 in.) Mark 8: 0.87 mm (0.0342 in.) Mark 10: 1.01 mm (0.0397 in.) Mark 11: 1.15 mm (0.0452 in.) Mark 12: 1.29 mm (0.0507 in.)
Intermediate shaft runout	Standard: 0.03 mm (0.00118 in.)
Intermediate shaft diameter	Standard A: 22.962 to 22.975 mm (0.9041 to 0.9045 in.) Standard B: 27.759 to 27.775 mm (1.0929 to 1.0935 in.)
Center planetary gear pinion thrust clearance	Standard: 0.12 to 0.68 mm (0.00473 to 0.0267 in.)
No. 2 brake pinion return spring free length	Standard: 22.66 mm (0.892 in.)
No. 2 brake piston piston stroke	0.6 to 0.9 mm (0.0237 to 0.0354 in.)
Flange thickness (No. 2 brake piston)	Mark 0: 2.0 mm (0.0787 in.) Mark 1: 2.1 mm (0.0827 in.) Mark 2: 2.2 mm (0.0866 in.) Mark 3: 2.3 mm (0.0906 in.) Mark 4: 2.4 mm (0.0945 in.) Mark 5: 2.5 mm (0.0984 in.) Mark 6: 2.6 mm (0.102 in.) Mark 7: 2.7 mm (0.106 in.)
Brake piston return spring free length	Standard: 17.05 mm (0.671 in.)
Front planetary gear pinion thrust clearance	Standard: 0.20 to 0.60 mm (0.00788 to 0.0236 in.)
Front planetary gear bushing inside diameter	Standard: 48.78 mm (1.92 in.)
No. 1 brake piston piston stroke	0.42 to 0.72 mm (0.0166 to 0.0283 in.)
No. 3 brake piston return spring free length	Standard: 15.72 mm (0.619 in.)
Flange thickness (No. 1 brake piston)	Mark 0: 2.0 mm (0.0787 in.) Mark 1: 2.2 mm (0.0866 in.) Mark 2: 2.4 mm (0.0945 in.) Mark 3: 2.6 mm (0.102 in.)

SERVICE DATA (Clutch Drum And Input Shaft:)

Direct clutch return spring free length	Standard: 20.02 mm (0.788 in.)
Reverse clutch return spring free length	Standard: 21.03 mm (0.828 in.)
Direct clutch pack clearance	0.5 to 0.8 mm (0.0197 to 0.0314 in.)
Flange thickness (Direct clutch)	Mark 0: 3.0 mm (0.118 in.) Mark 1: 3.1 mm (0.122 in.) Mark 2: 3.2 mm (0.126 in.) Mark 3: 3.3 mm (0.130 in.) Mark 4: 3.4 mm (0.134 in.) Mark 5: 3.5 mm (0.138 in.) Mark 6: 3.6 mm (0.142 in.) Mark 7: 3.7 mm (0.146 in.) Mark 8: 3.8 mm (0.150 in.)
Reverse clutch pack clearance	0.4 to 0.7 mm (0.0158 to 0.0275 in.)
Flange thickness (Reverse clutch)	Mark 0: 2.4 mm (0.0945 in.) Mark 1: 2.5 mm (0.0984 in.) Mark 2: 2.6 mm (0.102 in.) Mark 3: 2.7 mm (0.106 in.) Mark 4: 2.8 mm (0.110 in.) Mark 5: 2.9 mm (0.114 in.) Mark 6: 3.0 mm (0.118 in.) Mark 7: 3.1 mm (0.122 in.) Mark 8: 3.2 mm (0.126 in.) Mark 9: 3.3 mm (0.130 in.) Mark A: 3.4 mm (0.134 in.) Mark B: 3.5 mm (0.138 in.)
Forward clutch return spring free length	Standard: 26.29 mm (1.04 in.)
Forward clutch pack clearance	0.56 to 0.86 mm (0.0221 to 0.0338 in.)

IN

Flange thickness (Forward clutch)	Mark 0: 3.0 mm (0.118 in.) Mark 1: 3.1 mm (0.122 in.) Mark 2: 3.2 mm (0.126 in.) Mark 3: 3.3 mm (0.130 in.) Mark 4: 3.4 mm (0.134 in.) Mark 5: 3.5 mm (0.138 in.) Mark 6: 3.6 mm (0.142 in.) Mark 7: 3.7 mm (0.146 in.) Mark 8: 3.8 mm (0.150 in.) Mark 9: 3.9 mm (0.154 in.)
Coast clutch pack clearance	0.4 to 0.7 mm (0.0158 to 0.0275 in.)
Flange thickness (Coast clutch)	Mark 0: 3.0 mm (0.118 in.) Mark 1: 3.1 mm (0.122 in.) Mark 2: 3.2 mm (0.126 in.) Mark 3: 3.3 mm (0.130 in.) Mark 4: 3.4 mm (0.134 in.) Mark 5: 3.5 mm (0.138 in.) Mark 6: 3.6 mm (0.142 in.) Mark 7: 3.7 mm (0.146 in.) Mark 8: 3.8 mm (0.150 in.) Mark 9: 3.9 mm (0.154 in.)
Forward clutch hub inside diameter	Standard: 23.037 to 23.062 mm (0.9070 to 0.9079 in.)
Reverse clutch hub inside diameter	Standard: 33.312 to 33.337 mm (1.3115 to 1.3125 in.)

SERVICE DATA (Accumulator:)

Spring	Free Length/Outer diameter mm (in.)	Color
B_1 (Outer)	46.36 (1.825)/17.10 (0.673)	Natural
C_2	65.07 (2.562)/16.2 (0.638)	Pink
B_3	70.5 (2.776)/19.7 (0.776)	Purple
C_3 (Inner)	44.0 (1.732)/14.0 (0.551)	Yellow
C_3 (Outer)	76.65 (3.0178)/20.10 (0.7913)	White

SERVICE DATA (Output Shaft Bearing:)

Clearance	0.02 to 0.12 mm (0.000787 to 0.00472 in.)
Flange thickness	No. 1: 3.80 mm (0.150 in.) No. 2: 3.85 mm (0.152 in.) No. 3: 3.90 mm (0.154 in.) No. 4: 3.95 mm (0.156 in.) No. 5: 4.00 mm (0.157 in.) No. 6: 4.05 mm (0.159 in.) No. 7: 4.10 mm (0.161 in.) No. 8: 4.15 mm (0.163 in.) No. 9: 4.20 mm (0.165 in.) No. 10: 4.25 mm (0.167 in.) No. 11: 4.30 mm (0.169 in.) No. 12: 4.35 mm (0.171 in.)

CLUTCH

SERVICE DATA (Clutch Pedal)

Pedal play	4.0 (0.158 in.)
Pedal stroke (Reference)	110 to 115 mm (4.331 to 4.528 in.)

SERVICE DATA (Clutch Unit)

Clutch disc rivet depth	Minimum	0.8 mm (0.031 in.)
Clutch disc runout	Maximum	0.7 mm (0.028 in.)

TL70 MANUAL TRANSMISSION / TRANSAXLE

SERVICE DATA

Manual transmission extension housing oil seal installation depth	-	0.1 to 1.1 mm (0.00394 to 0.0433 in.)
Reverse idler gear radial clearance	Standard Maximum	0.040 to 0.082 mm (0.00157 to 0.00323 in.) 0.082 mm (0.00323 in.)
No. 1 gear shift head slotted spring pin drive in depth	-	0 mm (0 in.) (from the end surface of the No. 1 gear shift head)

No. 2 gear shift head slotted spring pin drive in depth	-	0 mm (0 in.) (from the end surface of the No. 2 gear shift head)
No. 3 gear shift head slotted spring pin drive in depth	-	0 mm (0 in.) (from the end surface of the No. 3 gear shift head)
Transmission front bearing retainer oil seal installation depth	-	11.1 to 11.9 mm (0.437 to 0.469 in.)
Extension housing rear oil seal installation depth	-	1.0 to 2.0 mm (0.0394 to 0.0787 in.)
Counter shaft 6th gear thrust clearance	Standard Maximum	0.10 to 0.40 mm (0.00394 to 0.0157 in.) 0.40 mm (0.0157 in.)
Counter shaft 6th gear radial clearance	Standard Maximum	0.015 to 0.068 mm (0.000590 to 0.00268 in.) 0.068 mm (0.00268 in.)
Input shaft radial clearance	Standard Maximum	0.029 to 0.072 mm (0.00114 to 0.00283 in.) 0.072 mm (0.00283 in.)
1st gear thrust clearance	Standard Maximum	0.15 to 0.40 (0.00590 to 0.0157 in.) 0.40 (0.0157 in.)
1st gear radial clearance	Standard Maximum	0.015 to 0.066 (0.000590 to 0.00260 in.) 0.066 (0.00260 in.)
2nd gear thrust clearance	Standard Maximum	0.10 to 0.45 (0.000394 to 0.0177 in.) 0.45 (0.0177 in.)
2nd gear radial clearance	Standard Maximum	0.015 to 0.066 (0.000590 to 0.00260 in.) 0.066 (0.00260 in.)
Reverse gear thrust clearance	Standard Maximum	0.10 to 0.45 (0.000394 to 0.0177 in.) 0.45 (0.0177 in.)
Reverse gear radial clearance	Standard Maximum	0.015 to 0.066 (0.000590 to 0.00260 in.) 0.066 (0.00260 in.)
Counter shaft 3rd gear thrust clearance	Standard Maximum	0.10 to 0.35 (0.00394 to 0.0138 in.) 0.35 (0.0138 in.)
Counter shaft 3rd gear radial clearance	Standard Maximum	0.015 to 0.068 (0.000590 to 0.00268 in.) 0.068 (0.00268 in.)
Counter shaft 4th gear thrust clearance	Standard Maximum	0.10 to 0.35 (0.00394 to 0.0138 in.) 0.35 (0.0138 in.)
Counter shaft 4th gear radial clearance	Standard Maximum	0.065 to 0.115 (0.002559 to 0.00453 in.) 0.115 (0.00453 in.)
No. 1 gear shift head clearance	Standard Maximum	15.2 to 15.4 mm (0.59843 to 0.60630 in.) 15.4 mm (0.60630 in.)
No. 2 gear shift head clearance	Standard Maximum	15.2 to 15.4 mm (0.59843 to 0.60630 in.) 15.4 mm (0.60630 in.)
No. 3 gear shift head clearance	Standard Maximum	15.2 to 15.4 mm (0.59843 to 0.60630 in.) 15.4 mm (0.60630 in.)
Shift shaft	Standard width Minimum width	14.8 to 15.0 mm (0.583 to 0.591 in.) 14.8 mm (0.583 in.)
No. 1 shift inter lock block	Standard width Minimum width	14.8 to 15.0 mm (0.583 to 0.591 in.) 14.8 mm (0.583 in.)
No. 4 gear shift fork	Standard Maximum	15.2 to 15.4 mm (0.59843 to 0.60630 in.) 15.4 mm (0.60630 in.)
5th shift head	Standard Maximum	15.2 to 15.4 mm (0.59843 to 0.60630 in.) 15.4 mm (0.60630 in.)
No. 2 synchronizer ring and counter shaft 6th gear clearance	Standard Minimum	0.88 to 1.52 mm (0.0346 to 0.0598 in.) 0.88 mm (0.0346 in.)
Counter shaft 6th gear inside diameter	Standard Maximum	34.015 to 34.040 mm (1.33917 to 1.34016 in.) 34.040 mm (1.34016 in.)
No. 4 gear shift fork claw	Standard Minimum	7.9 to 8.0 mm (0.311 to 0.315 in.) 7.9 mm (0.311 in.)
No. 4 gear shift fork claw and glove of the No. 4 transmission hub sleeve clearance	Standard Maximum	0.15 to 0.35 mm (0.00590 to 0.0138 in.) 0.35 mm (0.0138 in.)
Reverse idler gear inside diameter	Standard Maximum	22.040 to 22.061mm (0.86771 to 0.86854 in.) 22.061mm (0.86854 in.)
Reverse idler gear shaft outer diameter	Standard Minimum	21.979 to 22.000 mm (0.86531 to 0.86614 in.) 21.979 mm (0.86531 in.)

IN

No. 4 transmission clutch hub shaft snap ring	Mark A	2.80 mm (0.11023 in.)
	B	2.85 mm (0.11220 in.)
	C	2.90 mm (0.11417 in.)
	D	2.95 mm (0.11614 in.)
	E	3.00 mm (0.11811 in.)
	F	3.05 mm (0.12007 in.)
No. 2 synchronizer ring and 3rd gear clearance	Standard Minimum	0.8 to 1.6 mm (0.0314 to 0.0629 in.) 0.8 mm (0.0314 in.)
Front input shaft bearing shaft snap ring thickness	Standard Maximum	0 mm (0 in.) 0.1 mm (0.00394 in.)
Front input shaft bearing shaft snap ring	Mark 0	1.95 mm (0.07677 in.)
	1	2.00 mm (0.07874 in.)
	2	2.05 mm (0.08070 in.)
	3	2.10 mm (0.08267 in.)
	4	2.15 mm (0.08464 in.)
	5	2.20 mm (0.08661 in.)
Output shaft outer diameter	Standard A	31.984 to 32.000 mm (1.25921 to 1.25984 in.)
	B	42.984 to 43.000 mm (1.69228 to 1.69291 in.)
	C	40.984 to 41.000 mm (1.61354 to 1.61417 in.)
	Minimum A	31.984 mm (1.25921 in.)
	B	42.984 mm (1.69228 in.)
	C	40.984 mm (1.61354 in.)
Output shaft runout	Standard	0.03 mm (0.00118 in.) or less
Reverse gear inside diameter	Standard Maximum	47.015 to 47.040 mm (1.85098 to 1.85197 in.) 47.040 mm (1.85197 in.)
1st gear inside diameter	Standard Maximum	46.315 to 46.340 mm (1.82343 to 1.82441 in.) 46.340 mm (1.82441 in.)
2nd gear inside diameter	Standard Maximum	49.015 to 49.040 mm (1.92972 to 1.93071 in.) 49.040 mm (1.93071 in.)
1st gear bearing inner race outer diameter	Standard Minimum	40.284 to 40.300 mm (1.58598 to 1.58661 in.) 40.284 mm (1.58598 in.)
No. 1 gear shift fork claw	Standard Minimum	7.9 to 8.0 mm (0.311 to 0.315 in.) 7.9 mm (0.311 in.)
No. 1 gear shift fork claw and glove of the No. 1 transmission hub sleeve clearance	Standard Maximum	0.15 to 0.35 mm (0.00590 to 0.0138 in.) 0.35 mm (0.0138 in.)
No. 3 gear shift fork claw	Standard Minimum	7.9 to 8.0 mm (0.311 to 0.315 in.) 7.9 mm (0.311 in.)
No. 3 gear shift fork claw and glove of the No. 3 transmission hub sleeve clearance	Standard Maximum	0.15 to 0.35 mm (0.00590 to 0.0138 in.) 0.35 mm (0.0138 in.)
No. 1 synchronizer ring set and 1st gear clearance	Standard inner	0.48 to 1.12 mm (0.0189 to 0.0441 in.)
	Middle	0.38 to 1.22 mm (0.0150 to 0.0480 in.)
	Outer	0.8 to 1.8 mm (0.0315 to 0.0709 in.)
No. 1 synchronizer ring set and 2nd gear clearance	Standard inner	0.48 to 1.12 mm (0.0189 to 0.0441 in.)
	Middle	0.38 to 1.22 mm (0.0150 to 0.0480 in.)
	Outer	0.8 to 1.8 mm (0.0315 to 0.0709 in.)
No. 3 transmission clutch hub shaft snap ring thickness	Standard	0 to 0.1 mm (0 to 0.00394 in.)
No. 3 transmission clutch hub shaft snap ring	Mark A	1.80 mm (0.07086 in.)
	B	1.85 mm (0.07283 in.)
	C	1.90 mm (0.07480 in.)
	D	1.95 mm (0.07677 in.)
	E	2.00 mm (0.07874 in.)
	F	2.05 mm (0.08070 in.)
6th gear shaft snap ring thickness	Standard	0.1 to 0.11 mm (0.00394 to 0.00433 in.)

6th gear shaft snap ring	Mark A	2.67 mm (0.10511 in.)
	B	2.73 mm (0.10748 in.)
	C	2.79 mm (0.10984 in.)
	D	2.85 mm (0.11220 in.)
	E	2.91 mm (0.11456 in.)
	F	2.97 mm (0.11692 in.)
	G	3.03 mm (0.11929 in.)
	H	3.09 mm (0.12165 in.)
	J	3.15 mm (0.12401 in.)
	K	3.21 mm (0.01053 in.)
	L	3.27 mm (0.12874 in.)
No. 2 gear shift fork claw	Standard Minimum	7.9 to 8.0 mm (0.311 to 0.315 in.) 7.9 mm (0.311 in.)
No. 2 gear shift fork claw and glove of the No. 2 transmission hub sleeve clearance	Standard Maximum	0.15 to 0.35 mm (0.00590 to 0.0138 in.) 0.35 mm (0.0138 in.)
No. 1 synchronizer ring and 4rd gear clearance	Standard Minimum	0.8 to 1.6 mm (0.0314 to 0.0629 in.) 0.8 mm (0.0314 in.)
No. 3 synchronizer ring set and counter shaft 3rd gear clearance	Standard inner	0.4 to 1.2 mm (0.0157 to 0.0472 in.)
	Middle	0.3 to 1.3 mm (0.0118 to 0.0512 in.)
	Outer	0.8 to 1.8 mm (0.0315 to 0.0709 in.)
Counter shaft outer diameter	Standard A	39.284 to 39.300 mm (1.54661 to 1.54721 in.)
	B	37.984 to 38.000 mm (1.49543 to 1.49606 in.)
	C	24.987 to 25.000 mm (0.98374 to 0.98425 in.)
	Minimum A	39.284 mm (1.54661 in.)
	B	37.984 mm (1.49543 in.)
	C	24.987 mm (0.98374 in.)
Counter shaft runout	Standard	0.03 mm (0.00118 in.) or less
Counter shaft 3rd gear inside diameter	Standard Maximum	43.015 to 43.040 mm (1.69350 to 1.69448 in.) 43.040 mm (1.69448 in.)
Counter shaft 4th gear inside diameter	Standard Maximum	46.315 to 46.340 mm (1.82425 to 1.82441 in.) 46.340 mm (1.82441 in.)
4th gear bearing inner race outer diameter	Standard Minimum	46.225 to 46.250 mm (1.81988 to 1.82087 in.) 46.225 mm (1.81988 in.)
4th inner race thrust washer thickness	Standard	0 to 0.1 mm (0 to 0.00394 in.)
4th inner race thrust washer	Mark A	3.75 mm (0.14763 in.)
	B	3.80 mm (0.14960 in.)
	C	3.85 mm (0.15157 in.)
	D	3.90 mm (0.15354 in.)
	E	3.95 mm (0.15551 in.)
	F	4.00 mm (0.15748 in.)
	G	4.05 mm (0.15944 in.)
	H	4.10 mm (0.16141 in.)
Counter drive gear shaft snap ring thickness	Standard	0 to 0.1 mm (0 to 0.00394 in.)
Counter drive gear shaft snap ring	Mark A	1.80 mm (0.07086 in.)
	B	1.85 mm (0.07283 in.)
	C	1.90 mm (0.07480 in.)
	D	1.95 mm (0.07677 in.)
	E	2.00 mm (0.07874 in.)
	F	2.05 mm (0.08070 in.)
Front counter gear bearing shaft snap ring thickness	Standard	0 to 0.1 mm (0 to 0.00394 in.)
Front counter gear bearing shaft snap ring	Mark 1	2.05 mm (0.08070 in.)
	2	2.10 mm (0.08267 in.)
	3	2.15 mm (0.08464 in.)
	4	2.20 mm (0.08661 in.)
	5	2.25 mm (0.08858 in.)
	6	2.30 mm (0.09055 in.)

DRIVE SHAFT / PROPELLER SHAFT

SERVICE DATA (Propeller Shaft)

Propeller shaft with center bearing shaft assembly runout	Maximum runout: 0.6 mm (0.0236 in.)

AXLE AND DIFFERENTIAL

SERVICE DATA (Axle)

Front axle hub bearing looseness	Maximum: 0.05 mm (0.00196 in.)
Front axle hub runout	Maximum: 0.05 mm (0.00196 in.)
Rear axle hub bearing looseness	Maximum: 0.05 mm (0.00196 in.)
Rear axle hub runout	Maximum: 0.05 mm (0.00196 in.)

SERVICE DATA (Differential)

Rear differential carrier oil seal drive in depth	1.55 to 2.45 mm (0.062 to 0.098 in.)
Rear differential side gear shaft oil seal drive in depth	-0.5 to 0.5 mm (-0.02 to 0.02 in.)
Differential ring gear runout	Maximum: 0.07 mm (0.003 in.)
Rear differential case sub-assembly runout	Maximum: 0.07 mm (0.003 in.)
Differential ring gear backlash	0.13 to 0.18 mm (0.005 to 0.007 in.)
Differential side gear backlash	0 mm (0 in.)
Rear drive pinion companion flange runout	Maximum: 0.09 mm (0.004 in.)
Differential drive pinion preload (at starting)	New bearing: 1.87 to 2.24 N*m (19.1 to 22.8 kgf*cm, 1.38 to 1.65 ft*lbf) Reused bearing: 1.87 to 2.17 N*m (19.1 to 22.1 kgf*cm, 1.38 to 1.60 ft*lbf)
Total preload (Drive pinion preload plus)	New differential case bearing x New rear drive pinion tapered roller bearing: 2.27 to 2.87 N*m (23.1 to 29.3 kgf*cm, 1.67 to 2.12 ft*lbf) New differential case bearing x Reused rear drive pinion tapered roller bearing: 2.27 to 2.80 N*m (23.1 to 28.6 kgf*cm, 1.67 to 2.07 ft*lbf) Reused differential case bearing x New rear drive pinion tapered roller bearing: 2.19 to 2.77 N*m (22.3 to 28.2 kgf*cm, 1.62 to 2.04 ft*lbf) Reused differential case bearing x Reused rear drive pinion tapered roller bearing: 2.19 to 2.70 N*m (22.3 to 27.5 kgf*cm, 1.62 to 1.99 ft*lbf)

Rear differential side gear shaft plate washer thickness mm (in.)	2.57 to 2.59 (0.1012 to 0.1020) 2.59 to 2.61 (0.1020 to 0.1028) 2.61 to 2.63 (0.1028 to 0.1035) 2.63 to 2.65 (0.1035 to 0.1043) 2.65 to 2.67 (0.1043 to 0.1051) 2.67 to 2.69 (0.1051 to 0.1059) 2.69 to 2.71 (0.1059 to 0.1067) 2.71 to 2.73 (0.1067 to 0.1075) 2.73 to 2.75 (0.1075 to 0.1083) 2.75 to 2.77 (0.1083 to 0.1091) 2.77 to 2.79 (0.1091 to 0.1098) 2.79 to 2.81 (0.1098 to 0.1106) 2.81 to 2.83 (0.1106 to 0.1114) 2.83 to 2.85 (0.1114 to 0.1122) 2.85 to 2.87 (0.1122 to 0.1130) 2.87 to 2.89 (0.1130 to 0.1138) 2.89 to 2.91 (0.1138 to 0.1146) 2.91 to 2.93 (0.1146 to 0.1154) 2.93 to 2.95 (0.1154 to 0.1161) 2.95 to 2.97 (0.1161 to 0.1169) 2.97 to 2.99 (0.1169 to 0.1177) 2.99 to 3.01 (0.1177 to 0.1185) 3.01 to 3.03 (0.1185 to 0.1193) 3.03 to 3.05 (0.1193 to 0.1201) 3.05 to 3.07 (0.1201 to 0.1209) 3.07 to 3.09 (0.1209 to 0.1217) 3.09 to 3.11 (0.1217 to 0.1224) 3.11 to 3.13 (0.1224 to 0.1232) 3.13 to 3.15 (0.1232 to 0.1240) 3.15 to 3.17 (0.1240 to 0.1248) 3.17 to 3.19 (0.1248 to 0.1256) 3.19 to 3.21 (0.1256 to 0.1264) 3.21 to 3.23 (0.1264 to 0.1272) 3.23 to 3.25 (0.1272 to 0.1280) 3.25 to 3.27 (0.1280 to 0.1287) 3.27 to 3.29 (0.1287 to 0.1295) 3.29 to 3.31 (0.1295 to 0.1303) 3.31 to 3.33 (0.1303 to 0.1311) 3.33 to 3.35 (0.1311 to 0.1319) 3.35 to 3.37 (0.1319 to 0.1327) 3.37 to 3.39 (0.1327 to 0.1335) 3.39 to 3.41 (0.1335 to 0.1343) 3.41 to 3.43 (0.1343 to 0.1350) 3.43 to 3.45 (0.1350 to 0.1358) 3.45 to 3.47 (0.1358 to 0.1366) 3.47 to 3.49 (0.1366 to 0.1374)
Rear differential drive pinion plate washer thickness mm (in.)	1.69 to 1.71 (0.0665 to 0.0673) 1.72 to 1.74 (0.0677 to 0.0685) 1.75 to 1.77 (0.0689 to 0.0697) 1.78 to 1.80 (0.0701 to 0.0709) 1.81 to 1.83 (0.0713 to 0.0720) 1.84 to 1.86 (0.0724 to 0.0732) 1.87 to 1.89 (0.0736 to 0.0744) 1.90 to 1.92 (0.0748 to 0.0756) 1.93 to 1.95 (0.0760 to 0.0768) 1.96 to 1.98 (0.0772 to 0.0780) 1.99 to 2.01 (0.0783 to 0.0791) 2.02 to 2.04 (0.0795 to 0.0803) 2.05 to 2.07 (0.0807 to 0.0815) 2.08 to 2.10 (0.0819 to 0.0827) 2.11 to 2.13 (0.0831 to 0.0839) 2.14 to 2.16 (0.0843 to 0.0850) 2.17 to 2.19 (0.0854 to 0.0862) 2.20 to 2.22 (0.0866 to 0.0874) 2.23 to 2.25 (0.0878 to 0.0886) 2.26 to 2.28 (0.0890 to 0.0898) 2.29 to 2.31 (0.0902 to 0.0909) 2.32 to 2.34 (0.0913 to 0.0921)

ALIGNMENT / HANDLING DIAGNOSIS

SERVICE DATA (Vehicle Height (Unloaded Vehicle))

Dimension A - Dimension B (mm {in})	Dimension C - Dimension D (mm {in})
146 (5.75)	110 (4.33)

IN

Measurement points:

A: Dimension A…Center of the front wheel

A: Dimension B…Center of the tip of the front arm ASSY front side bushing mounting bolt

A: Dimension C…Center of the rear wheel

A: Dimension D…Center of the rear end of the rear lower arm No.2 bushing mounting bolt threaded portion

SERVICE DATA (Camber (Unloaded Vehicle))

-	Camber Inclination	Right-left Difference
Front	0 +/- 45'	30' or less
Rear	-1°10' +/- 45'	45' or less

SERVICE DATA (Caster (Unloaded Vehicle))

-	Caster Inclination (Reference)
Front	5°55' (5.90°)

SERVICE DATA (Wheel Turning Angle (Unloaded Vehicle))

-	Inside Wheel (Reference)	Outside Wheel (Reference)
Front	36°54'	31°12'

SERVICE DATA (Toe-in (Unloaded Vehicle))

-	Specified Condition
Front	Toe angle (sum of wheels) : 0°00' +/- 0°15' (0.00° +/- 0.25°)
	0 +/- 3.0 mm (0 +/- 0.12 in.)
Rear	Toe angle (sum of wheels) : 0°10' +/- 0°15' (0.16° +/- 0.25°)
	2.0 +/- 3.0 mm(0.08 +/- 0.12 in.)

SERVICE DATA (Distance between the centers of the 2 installation bolts of the rear No. 2 suspension arm assembly LH and RH)

-	Standard distance
Rear	457.5 +/- 3 mm (18.01 +/- 0.12 in.)

SERVICE DATA (Distance between the centers of the 2 installation bolts of the rear No. 2 suspension arm assembly)

-	Standard distance
Rear	450.9 +/- 2 mm (17.75 +/- 0.08 in.)

TIRE / WHEEL

SERVICE DATA (Cold Tire Inflation Pressure)

Tire Size	Cold Tire Inflation Pressure kPa (kgf/cm^2, psi)	
215/45R17 87W	240 (2.4, 35)	240 (2.4, 35)
215/40R18 85Y	240 (2.4, 35)	240 (2.4, 35)
T135/80D 16 101M	420 (4.2, 60)	420 (4.2, 60)
T145/70D 17 106M	420 (4.2, 60)	420 (4.2, 60)

Maximum wheel runout	Steel wheel	1.5 mm (0.059 in.) (Vertical and lateral)
	Aluminum wheel	1.0 mm (0.039 in.) (Vertical and lateral)

Maximum wheel imbalance after adjustment	10.0 g (0.35 oz)

BRAKE SYSTEM (OTHER)

SERVICE DATA

Brake pedal height from floor mat	for Manual Transmission	145mm (5.709in.)
	for Automatic Transmission	150mm (5.906in.)
Brake pedal free play (when the brake pedal is pushed to move with a force of less than 10 N (1 kgf, 2.2 lbf).)		0.5 mm (0.02in.) to 2.7mm (0.106in.) or less

Brake pedal reserve distance from asphalt sheet at 490 N (50 kgf, 110 lbf)	for Manual Transmission	More than 55 mm (2.165 in.)
	for Automatic Transmission	More than 55 mm (2.165 in.)
Vacuum of the vacuum pump assembly	With the engine idling	More than 93 kPa (698 mmHg, 13.5 psi) of vacuum

BRAKE (FRONT)

SERVICE DATA (normal type)

Pad lining thickness	Standard	11.0 mm (0.433 in.)
	Minimum	1.5 mm (0.0591 in.)
Disc thickness	Standard	24.0 mm (0.945 in.)
	Minimum	22.0 mm (0.866 in.)
Disc runout	Maximum	0.05 mm (0.002 in.)

SERVICE DATA (brembo type)

Pad lining thickness	Standard	8.9 mm (0.350 in.)
	Minimum	1.2 mm (0.047 in.)
Disc thickness	Standard	30.0 mm (1.181 in.)
	Minimum	28.0 mm (1.102 in.)
Disc runout	Maximum	0.075 mm (0.003 in.)

BRAKE (REAR)

SERVICE DATA (normal type)

Pad lining thickness	Standard	11.0 mm (0.433 in.)
	Minimum	1.5 mm (0.059 in.)
Disc thickness	Standard	18.0 mm (0.709 in.)
	Minimum	16.0 mm (0.630 in.)
Disc runout	Maximum	0.05 mm (0.002 in.)

SERVICE DATA (brembo type)

Pad lining thickness	Standard	9.0 mm (0.354 in.)
	Minimum	1.2 mm (0.047 in.)
Disc thickness	Standard	20.0 mm (0.787 in.)
	Minimum	18.0 mm (0.709 in.)
Disc runout	Maximum	0.07 mm (0.003 in.)

PARKING BRAKE

SERVICE DATA

Parking brake lever travel at 200 N (20 kgf, 45.0 lbf)		7 to 8 notches
Brake disc inside diameter	Standard	190 mm (7.48 in.)
	Maximum	191 mm (7.52 in.)
Parking brake shoe lining thickness	Standard	3.5 mm (0.138 in.)
	Minimum	1.5 mm (0.059 in.)

STEERING COLUMN

SERVICE DATA

Maximum steering free play	30 mm (1.18 in.)
Steering column assembly preload	1.7 N*m (1.8 kgf*cm, 1.3 ft*lbf) or less
Steering intermediate shaft assembly turn torque (rack and pinion power steering gear assembly side)	6.6 N (0.67 kgf, 1.48 lbf) or less
Steering intermediate shaft assembly turn torque (steering column assembly side)	6.0 N (0.61 kgf, 1.35 lbf) or less

STEERING GEAR / LINKAGE

SERVICE DATA

Rack and pinion steering gear assembly total preload (turning)	0.9 to 1.6 N*m (9.2 to 16.3 kgf*cm, 0.66 to 1.18 ft*lbf)

FA20 BATTERY / CHARGING

SERVICE DATA

Charging circuit without load	Standard amperage: 10 A or less Standard voltage: 10.6 to 16.0 V
Charging circuit with load	Standard amperage: 30 A or higher
Brush length	Standard length: 22.5 mm (0.885 in.) Minimum exposed length: 5.0 mm (0.196 in.)
Battery type	55D23L/75D23L

HEATING / AIR CONDITIONING

SERVICE DATA

Refrigerant charge volume	Standard: 390 +/-50 g(13.76 +/-1.76 oz)

Troubleshooting procedures for ECM control system

Explanation of basic diagnostic procedures

NOTE:

Perform troubleshooting according to the following diagnostic procedures. Only the basic procedures are shown here. For details, refer to the most effective procedures for each circuit as described in each system section. Before beginning troubleshooting of the corresponding circuit, check the troubleshooting procedures first.

1	Bring in the car

Next

2	Customer interview and malfunction analysis

(1) Check with the customer regarding the status and conditions when the malfunction occurred, and create an check list for interview.

Next

3	Malfunction phenomenon check and diagnostic code (including freeze frame data) inspection

(1) Measure the battery voltage.
Voltage: 11 to 14 V (engine stopped)
(2) Visually check for any blown out fuses, open or short circuit in the wiring harness, or poor contact of the connectors.
(3) Check the malfunction phenomenon and conditions, and inspect the diagnostic code according to the corresponding chart.
Diagnostic code is present.: Refer to list of diagnostic codes.
No diagnostic code: Refer to symptoms table.

Next

4	Ascertaining vehicle conditions

(1) As some systems return to the initial conditions when parts are replaced, it is necessary to ascertain the vehicle setting conditions before repairing.
NOTE:
Setting procedures at parts removal ·installation (refer to IN - 10)

Next

5	Circuit/Parts inspection

(1) Use the list of diagnostic codes or symptom table to check which system circuits and parts should be inspected.

Next

6	Repair malfunction location

(1) According to Step 5, repair the system or part where the malfunction is found.

Next

7	Confirmation test

(1) After repair, confirm that the malfunction no longer exists. (If the malfunction recurs, perform the confirmation test again under the same environment and conditions in which the malfunction initially occurred.)
(2) For malfunctions containing diagnostic codes, confirm the results of the diagnostic judgement.

Next

8	Vehicle restoration

(1) Return all vehicle settings to the vehicle conditions checked in Step 4.
NOTE:
It is necessary to inform the customer of any locations that could not be returned to the original setting.

Next

Complete

Malfunction analysis using check list for interview

1. In order to identify the malfunction phenomenon correctly and make an appropriate decision, it is important not to introduce any bias into the troubleshooting process. In order to check the malfunction phenomenon, it is extremely important to ask the customer about the conditions when the malfunction occurred.
2. The following five items are valuable points in performing malfunction analysis. Sometimes, malfunction or repair history that seems not related to the current malfunction is useful. When performing troubleshooting, it is necessary to gather such information as much as possible and to correctly know how these troubles are related to the current one. Fill in each system diagnosis section of the check list for interview.

- What: Vehicle model, system name
- When: Date/Time, frequency
- Where: Route conditions
- Conditions: Driving conditions, weather
- What was happening when the malfunction occurred?: Malfunction phenomena

NOTE:
The following is a sample check list for interview.

IN

Engine Diagnosis Checklist for Interview

Vehicle model		Date of vehicle bring-in		History of bring-in	No / Yes (times)
Frame No.		Registration date		Registration No.	
		Occurrence date		Odometer reading km	
Vehicle equipment					

Vehicle you used in the past	Main area for use / purpose
Customer's characteristics	
Customer specified content Warning light illumination On / Off ( )	

Interview result	System condition	Driving condition	Road surface	Others	Frequency of occurrence
	Occurrence speed ( ) km/h	☐ Start moving	☐ Flat	Accel. opening angle	☐ Always
	Shift position ( ) range	☐ Cruising	☐ Uphill ☐ Downhill	( ) %	☐ Only once
	☐ Starting	☐ Accelerating	☐ Dry paved road	Ambient temp.	☐ Sometimes
	☐ After starting	☐ Decelerating	☐ Wet paved road	( ) °C (°F)	
	☐ For ( ) min. after starting	☐ Braking	☐ Unpaved road	Weather	☐ ( ) times/day
	☐ For ( ) min. driving	☐ Turning	Rough foad	( )	☐ ( ) times/week
	☐ When cold	☐ Parking	☐ Snow road, icy road	Gasoline	☐ ( ) times/month
	☐ When warm	☐ No relation	☐ Bumps, manhole etc.,	☐ High octane	
	☐ When rotating	☐ Others	☐ Others	☐ Regular	
	☐ Others ( )	( )	( )		
	Additional remarks				

Inspection result			
	Confirmation of diagnostic code		
	Illumination ☐ Off ☐ On	☐ Diagnostic code normal ☐ Diagnostic code abnormal (Fill-in all code.)	Fuel pressure during engine stop Fuel pressure for one minute after engine stop
	Detail of phenomenon	Driving condition and place when phenomenon occurred/recurred	
	Status of recurrence ☐ Always ☐ Sometimes ☐ Continues for a while if once recurred ☐ Not recurred		

Dealer name	Shop name	Front	Engineer

NT-00470

Malfunction symptoms and DTC check

NOTE:

The diagnostic system has various functions. When a malfunction occurs in the signal circuit to the ECM, the corresponding code is stored in the ECM memory, and this is output as a diagnostic code during troubleshooting. This diagnostic function has been included so that you can freely use it to rapidly narrow down the scope of the malfunction and perform effective troubleshooting.

IN

It is extremely important to check diagnostic codes in order to determine if the malfunction indicated by the diagnostic code is still occurring, or if the malfunction occurred in the past but now operation has returned to normal. Additionally, it is necessary to check using malfunction phenomenon inspection to determine if the malfunction indicated by the diagnostic code is directly related to the malfunction phenomenon.

For this reason, it is necessary to check the diagnostic code before and after checking the malfunction phenomenon in order to determine the current conditions. Failure to do this results in, depending on the conditions, having to perform unnecessary troubleshooting of systems that might be operating normally, making it difficult to locate the malfunction location and the performance of repairs unrelated to the malfunction. For this reason, it is necessary to always check diagnostic codes in the correct order of the procedure.

NOTE:

- The following is a flowchart that shows how to perform troubleshooting using diagnostic code checking.
- This flowchart indicates how to effectively use diagnostic code checking, and procedures for performing diagnostic code and malfunction phenomenon troubleshooting by carefully checking the results of the diagnostic code check.

1	Malfunction identification (Interview)

Next

2	DTC check

(1) Read out all DTCs.

Result

Result	Go to
Diagnostic code is present.	A
Cannot read out from all connected ECMs.	B
No diagnostic code	C

B → Bus (communication lines) failure (Refer to NW - 30for CAN bus failure and to NW - 5LIN failure.)

C → Go to Step 7.

A

3	Save diagnostic codes and freeze frame data

(1) Save output diagnostic codes and freeze frame data.

CAUTION:

- Do not delete before saving. Deleting these will result in the deletion of all diagnostic codes, freeze frame data and history data.
- Write down the panel diagnosis information as it cannot be saved.

NOTE:

- When multiple codes are output, identify the main cause by all diagnostic codes.
- For systems in which ECM data can be checked, use input-period estimation data (data monitor).

- There are output diagnostic codes even if there is no malfunction. (Such as air conditioning sunload sensor and learning not performed after battery disconnection.)

Result

Result	Go to
Communication diagnostics and other diagnostics are present	A
Other than communication diagnostics	B
Communication diagnostics only	C

B → Go to Step 5.

C → Bus (communication lines) failure (Refer to NW - 30for CAN bus failure and to NW - 5LIN failure.)

A

4	Isolate malfunction cause

(1) From all the diagnostic codes, determine whether main cause is in parts or bus (communication line).

NOTE:

It is possible to be tailgating output of communication diagnostics due to a parts malfunction.

Result

Result	Go to
Part failure	A
Bus (communication line) failure	B

B → Bus (communication lines) failure troubleshooting (Refer to NW - 30for CAN communication system and to NW - 5for the large-scale multiplex communication system for vehicle body [LIN].)

A

5	Clear diagnostic codes and freeze frame data.

Next

6	Driving test, DTC check

Result

Result	Go to
No diagnostic code	A
Diagnostic code is present.	B

B → Perform troubleshooting according to the flowchart by diagnostic code.

A

Perform simulation test using the simulation procedures of the malfunction phenomenon.

IN

7	Check malfunction phenomenon

(1) Use the interview results and data monitor to determine whether the customer's indications are malfunction.

NG → Perform troubleshooting according to the flowchart by symptom.

OK

System normal

Procedures for malfunction phenomenon simulation

NOTE:

- The most difficult thing in troubleshooting is when there is no appearance of a malfunction phenomenon. In such cases, it is necessary to thoroughly analyze the malfunction information provided by the customer, and recreate the same conditions/ environment of the customer's vehicle that existed when the malfunction occurred. Performing troubleshooting without confirming the malfunction phenomenon results in overlooking important points of repair procedures and making mistakes such that, ultimately, troubleshooting reaches a dead end.
- For example, checking a malfunction that occurs when starting a cold engine with the engine already warmed-up, or checking for a vibration that occurs while driving on the road with the vehicle stopped limit the amount of checking and makes it impossible to identify the malfunction location.
- Although there are malfunction with causes that cannot be reproduced, such as vibration, heat or entrance of water (moisture), the procedures indicated here for malfunction phenomenon reproduction are effective means in terms of providing for external causes when a vehicle is stopped.

Important points of malfunction simulation test

Although it is necessary to check the malfunction phenomenon using malfunction phenomenon reproduction procedures, it is necessary to also find the malfunction scope/location. Doing this requires you to narrow down the circuits containing the malfunction based on the malfunction phenomenon before performing tests and connect the tester beforehand. Afterwards, perform the malfunction reproduction procedures, and determine the circuits that are faulty and those that are normal during the testing while also checking the malfunction phenomenon. Refer to the malfunction phenomenon list for each system to narrow down the cause of the malfunction phenomenon. It is also necessary to use reproduction procedures that are according to the corresponding detection conditions/time of the corresponding diagnostic code in order to reproduce diagnostic code output.

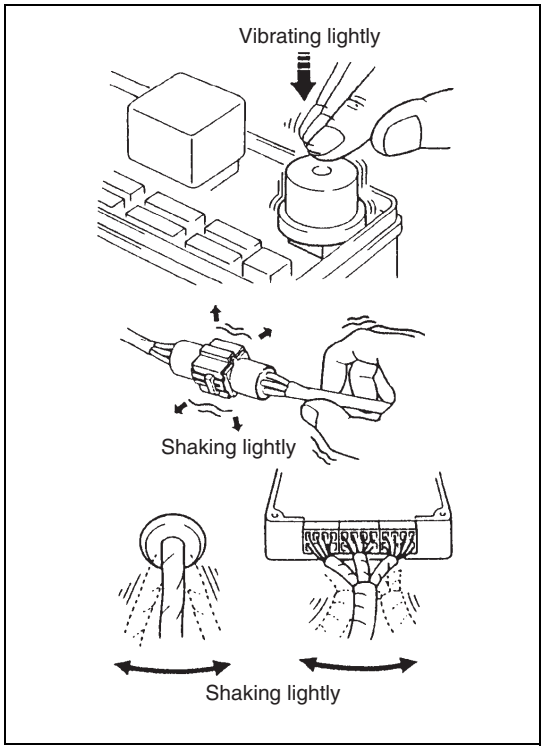

1. Vibration method: For malfunctions thought to be caused by vibration
   (1) Parts and sensors
      (a)Lightly tap by hand on the probable malfunctioning parts or use a similar method to vibrate them, and check if any malfunction occurs.
      NOTE:
      Subjecting relays to a strong impact can cause their points to open.
   (2) Connectors
      (a)Lightly shake the connectors up/down and right/left.
   (3) Wire harnesses
      (a)Lightly shake the wire harnesses up/down and left/right, and check if any malfunction occurs.
      NOTE:
      It is especially important to check the connector bases, vibration fulcrums and areas passing through the body.

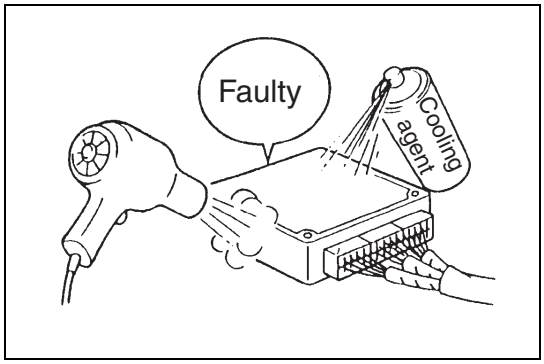

2. Cooling/Heating method: For malfunctions thought to occur when cooled or heated
   (1) Heat up or cool down (using a hair drier or coolant) the probable malfunctioning parts, and check if any malfunction occurs.
      CAUTION:
      - If heating: Do not heat by +60°C (can be touched by hand) or more.
      - Do not heat or cool with the cover of the ECM or similar parts open so as to not directly heat or cool any electrical parts.

      NOTE:
      Coolant can be purchased at electrical parts stores.

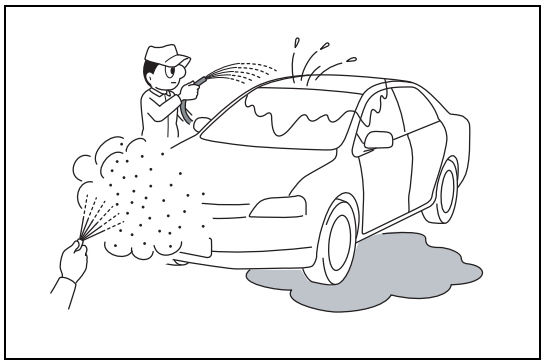

3. Water sprinkling method: For malfunctions thought to occur during rain or high temperature
   (1) Sprinkle water on the vehicle and check if any malfunction occurs.
      CAUTION:
      - Do not sprinkle water directly on the engine room. Spray a fine mist of water to the front surface of the radiator to indirectly change the temperature and humidity.
      - Do not sprinkle water directly on electrical parts.

4. Other: For malfunctions thought to be caused during excessive electrical load
   (1) Create an excessive electrical load by operating various electrical parts such as the heater blower, headlights and rear defogger, and check if any malfunction occurs.

List of diagnostic codes

This diagnostic codes list is for use with the diagnostic code displayed during diagnostic code checking and allows you to perform accurate and effective troubleshooting. Troubleshooting must be performed based on the inspection procedures of the diagnostic table corresponding to the displayed diagnostic code. Below is an example of the diagnostic codes list of the EFI system.

IN

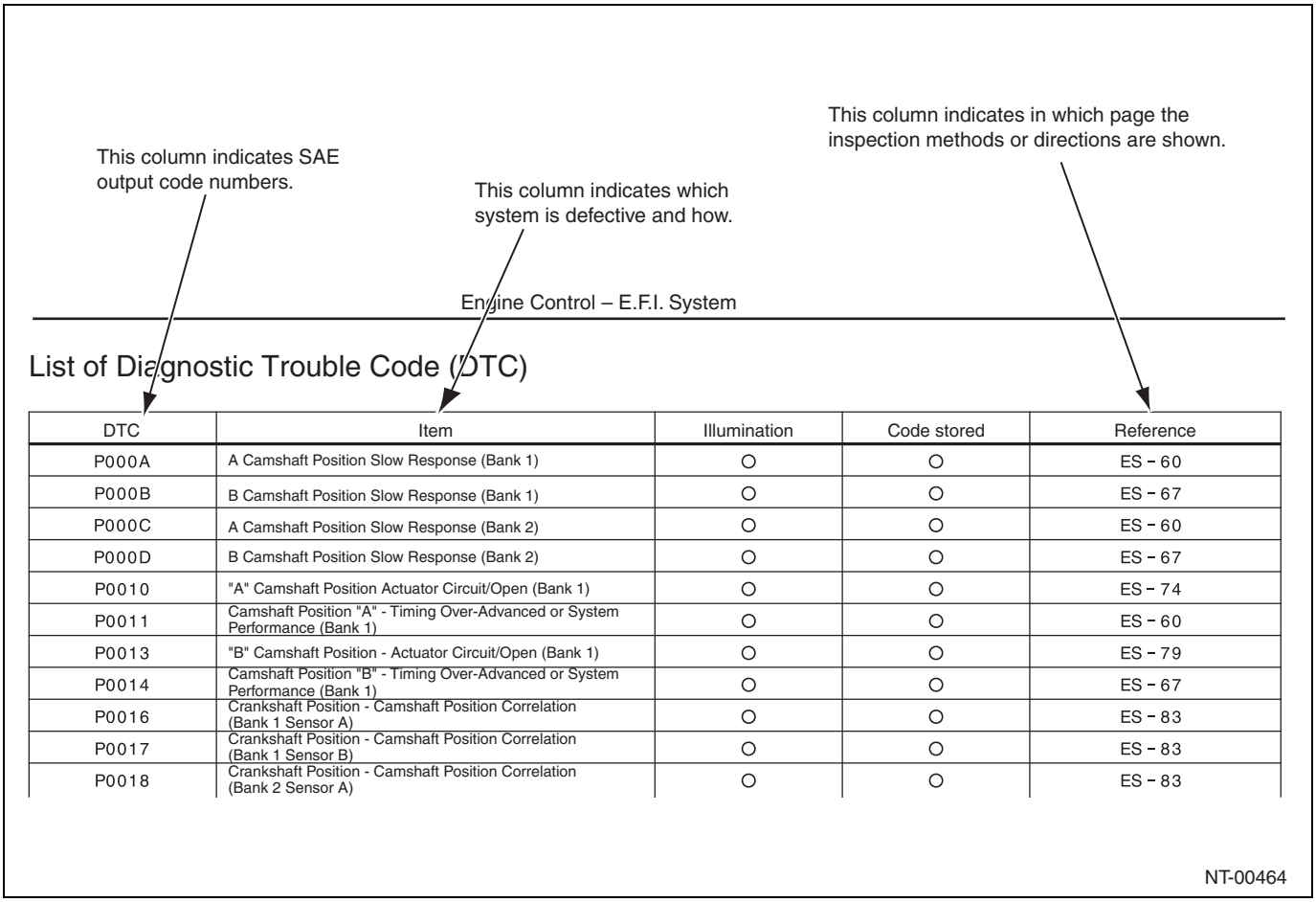

Symptom table

The probable malfunctioning circuit and parts corresponding to each malfunction phenomenon are shown below. This table is used for performing troubleshooting when a malfunction is still present although normal codes are displayed during DTC checking. The probable malfunction location indicates the inspection items of circuits and parts that must be checked.

NOTE:

If a malfunction is not detected by the diagnostic system although malfunction symptoms are present, it is thought that the malfunction has occurred in a location outside of the detection scope of the diagnostic system, or in a system other than the diagnostic system.

This column indicates the symptoms except that DTC numbers are shown.

This column indicates the circuits or part names to be inspected according to each faulty condition.

This column indicates the pages that have the flow charts for each circuit and the inspection methods.

Symptom Table

Symptoms	Locations to be inspected	Reference
No cranking	Starter and starter relay	06 – 82
	Neutral start switch system	06 – 61
Engine start failure (no initial combustion)	ECM power supply system	06 – 82
	Igniter system	06 – 64
	Fuel pump system	06 – 78
	Fuel injector	06 – 78
	Crank angle sensor system	06 – 52
Engine start failure (insufficient combustion)	Fuel pump system	06 – 78
	Igniter system	06 – 64
	Fuel injector	06 – 82
	Crank angle sensor system	06 – 52
Engine start failure (normal cranking)	Starter system	06 – 76
	ISCV system	06 – 61
	Fuel pump system	06 – 78
	Igniter system	06 – 64
	Spark plug	06 – 64

H

Inspection flow by DTC system

How to read and use each page is described below.

- Troubleshooting is shown in order of DTC, and separated by systems and symptoms in order to make it easier to diagnose malfunctions and investigate the cause.
- Troubleshooting procedures are described in sections with the following headings: "DTC", "Circuit description", "Detecting conditions", "Circuit figure", and "Inspection steps".

IN

DTC

DTC name

DTC	P0115/22	Engine coolant temp.

Circuit outline
The resistance value of the thermistor in E.F.I. water temperature changes according to coolant temperature changing. How to connect E.F.I water temperature to engine control computer is the same as the inlet air temperature sensor.

DTC No.	DTC detection condition 1. Diagnostic condition 2. Abnormal status 3. Period of abnormality 4. others	Part to be inspected
P0115/22	1. Ignition switch ON 2. Open or short circuit in E.F.I. water temperature sensor 3. 0.5 sec. or more 4. 1 trip	• Wiring harness or connector • E.F.I. water temperature sensor • Engine control computer

Condition for detection

Circuit diagram

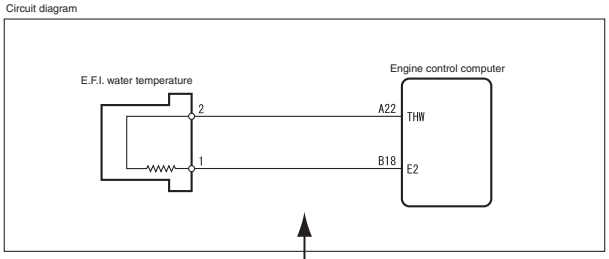

Related circuit diagram

Used to determine whether the circuit is normal or not. If not normal, refer here to locate the faulty location among the sensor, actuator, wiring harness or ECM.

<Note>
- If DTC P0110/24 (Intake air temperature sensor), P0115/22 (Engine coolant temp.) P0120/41 (Throttle sensor) are sequentially output, open circuit in E2 (ground lines) may occur.
- Read the freeze frame data using SST (TaSCAN). Freeze frame data has some records of the engine start condition at occurrence of malfunction. These records help troubleshooting.

1 TaSCAN data reading (engine coolant temperature)

SST 09991-70200
(1) Turn the ignition switch to ON to stop the engine, and read the coolant temperature displayed on SST (TaSCAN).

A	B	C
-40° C	140° C	Equivalent to actual coolant temp.

B → Go to step 4.

C → Inspection for occasional trouble

A

2 TaSCAN data reading (engine coolant temperature)

SST 09991-70200, 09843-18040

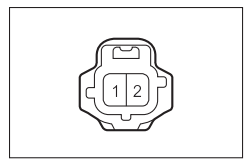

(1) Disconnect the E.F.I. water temperature sensor connector.
(2) Using SST (diagnosis check wire No. 2), short the vehicle connector terminals of E.F.I. water temperature.
(3) Turn the ignition switch to ON.
(4) Read the coolant temperature displayed on SST (TaSCAN).
Displayed temperature: 140°C or more

NG → Go to step 3.

OK

Replacement of E.F.I. water temperature

3 TaSCAN data reading (engine coolant temperature)

SST 09991-70200, 09843-18040

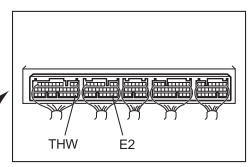

(1) Using SST (diagnosis check wire No. 2), short the circuit between the engine control computer connector A22 (THW) terminal and B18 (E2) terminal. (For terminal arrangement, refer to 06 - 13)
(2) Turn the ignition switch to ON.
(3) Read the coolant temperature displayed on SST (TaSCAN).
Displayed temperature: 140°C or more

NG → Inspection and replacement of engine control computer

OK

Repair or replacement of wiring harness or connector

Indicates the condition of the inspected ECM connector.

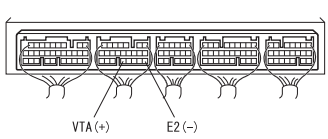

(+), (-) suffixed to terminal names indicates the destination of tester connector. During inspection, connectors are being connected.

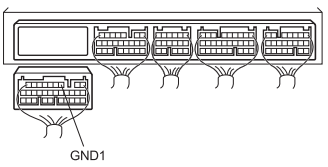

In inspection using chassis ground, ground side is not displayed. During inspection, connectors are being disconnected.

Inspection procedures for electrical circuits and how to perform

1. Basic inspection
   (1) Resistance inspection conditions for electrical parts

(a)Unless otherwise specified, all resistances are measured under an ambient temperature of 20°C. Wait until the engine has cooled after driving. If measuring right after driving a vehicle at a high ambient temperature, the resistance will not be at the specified value.

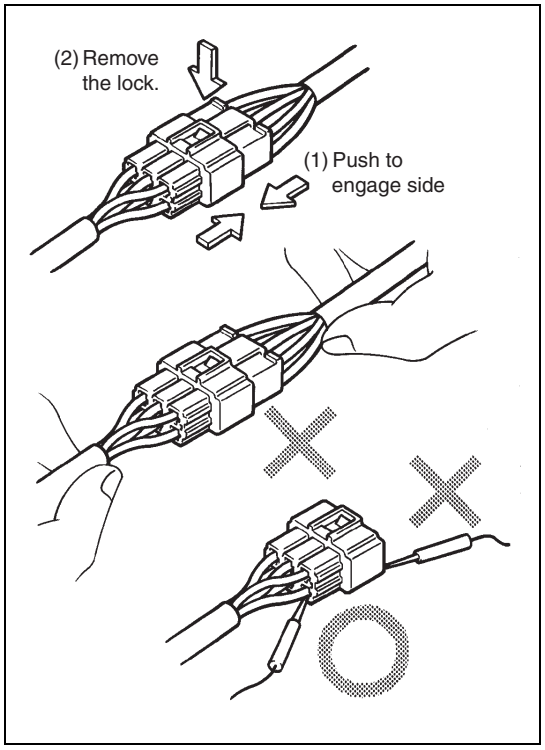

(2) Connector handling

(a)To disconnect a connector with a lock, press the connector in the joining direction until the lock tab can be easily moved and release the lock.

(b)When disconnecting a connector, hold the connector only (not pulling the harness).

(c)Before connecting a connector, check that the terminals are not deformed, damaged, missing or similarly defective.

(d)When connecting a connector with a lock, insert securely until a locking sound is heard.

(e)If checking the connector with an electrical tester, use a mini test lead and measure from the rear of the connector (harness side).

CAUTION:

- For waterproof connectors, connect directly to the sub-harness to measure as the measurement is not possible from the rear of a waterproof connector.
- Do not excessively move the inserted tester probe and be careful not to damage any terminals.

(3) Connector inspection procedures

(a)With the connector connected, grasp the connector housing and check the insertion status and lock effectiveness. (engagement status)

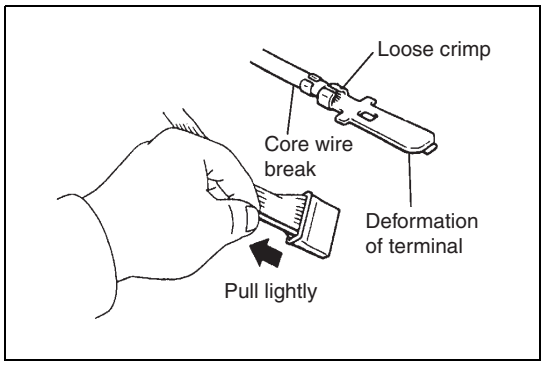

(b)With the connector separated, lightly pull on the wire harness. (missing terminals, terminal swage conditions, broken core) Visually check for presence of rust, metallic fragments, water and bent terminals. (Corrosion, foreign material, terminal deformation)

CAUTION:

If testing female gold-plated terminals, always use a male gold-plated terminal.

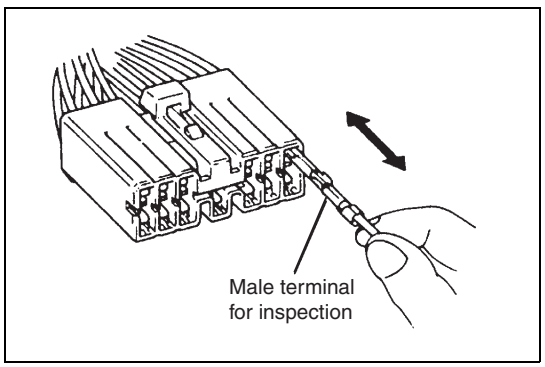

(c)Prepare a terminal similar to the male terminal and insert into the female terminal, and check the terminal contact pressure, engagement status and sliding weight.

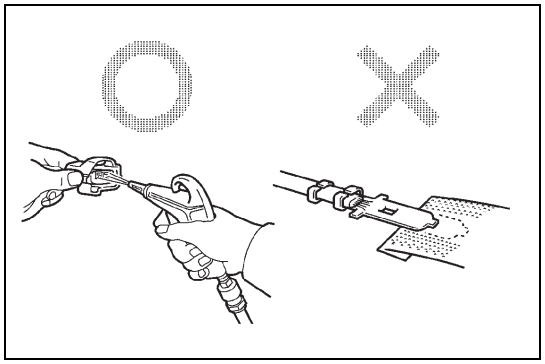

(4) Connector terminal repair procedures
(a) If contacts are dirty, clean using an airgun or soft cloth. Never use sandpaper or similar material to polish the contacts as such material will cause the plating to come off if used to polish such parts.
(b) If contact pressure is not normal, replace the female terminals. At this time, use gold-plated terminals for the female terminals if the male terminals of the corresponding part are gold plated (gold color), and use tin-plated if the male terminals are tin-plated (silver color).
(c) If contacts are normal, clean contacts using an airgun or similar method and apply connector grease. (This is to prevent contact oxidation and wear.)



(5) Connector grease
(a) Connectors in locations likely to contact water such as the alternator and headlights are filled with grease (white) that prevents corrosion of terminals.
(b) Fill female terminals with connector grease if the connector grease is insufficient or terminals have been repaired.
CAUTION:
- Make sure that no dust or other foreign material is adhering.
- Do not use a screwdriver or similar tool to fill grease.

(c) Although there is no problem if grease adheres to waterproof connector O-rings and rubber plugs, grease adhering to other rubber parts (such as weather stripping and grommets for wire harnesses) can result in deterioration and discoloration. If grease adheres to such parts, immediately wipe off the grease.

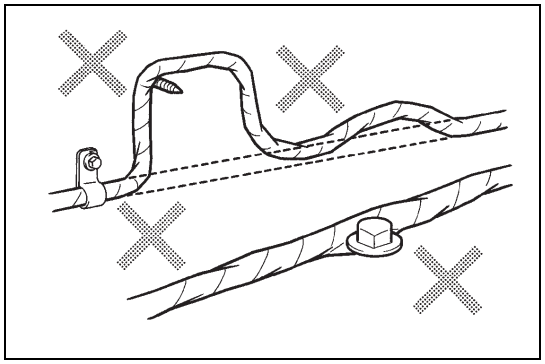

(6) Wire harness handling
(a) If the harness is removed, check wiring and clamp conditions before performing the procedures so that it can be securely restored.
(b) Do not twist or pull harnesses, and allow no more slack than necessary.
(c) Do not allow harnesses to be interfered with by any high-temperature locations, rotating parts, sliding parts, vibrating parts, or parts with sharp angles (such as panel edges and screw tips).
(d) Make sure that harnesses are not pinched when installing parts.
(e) Harness covering must not be damaged. If damaged, replace or repair thoroughly using vinyl tape.

Figure 1

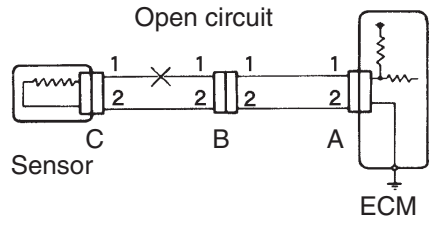

2. Open circuit inspection
   (1) Perform a resistance or voltage test for the open circuits of the wire harness shown in Fig. 1 to determine the location of the cause.

Figure 2

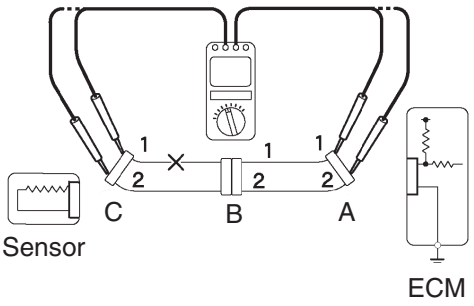

   (2) Measure the resistance.
      (a) Disconnect connectors A and C, and measure the resistance between them.
      Standard value: Less than 1 Ω
      NOTE:
      Measure the resistance while lightly shaking the wire harnesses up/down and left/right.
      (b) For cases shown in Fig. 2, there is an open circuit between terminals 1 of connectors A and C if the resistance between terminals 1 of connectors A and C is 10 kΩ or more (open circuit), and the resistance between terminals 2 of connectors A and C is less than 1 Ω.

Figure 3

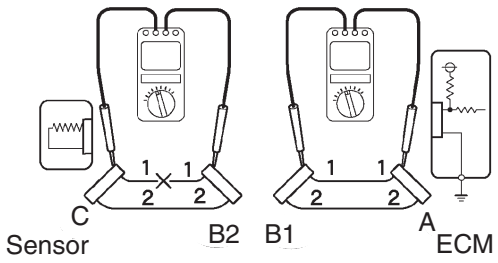

      (c) Disconnect connector B, and measure the resistance between connectors.
      (d) For cases shown in Fig. 3, there is an open circuit between terminals 1 of connectors B2 and C if the resistance between terminals 1 of connectors A and B1 is less than 1 Ω, and the resistance between terminals 1 of connectors B2 and C is 10 kΩ or more (open circuit).

Figure 4

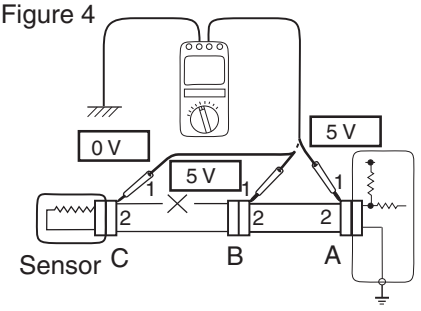

(3) Measure the voltage.
(a) A voltage test is performed to check for open circuits in circuits where voltage is applied to ECM connector terminals.
(b) As shown in Fig. 4, measure the voltage for ECM 5-V output terminal in the following order with all connectors connected. Between chassis ground and terminals 1 of connector A, connector B, and then connector C.
(c) There is an open circuit in the wire harness circuit between terminals 1 of B and C if the measurement results are as follows.
Criteria: Between terminal 1 of connector A and chassis ground: 5 V
Between terminal 1 of connector B and chassis ground: 5 V
Between terminal 1 of connector C and chassis ground: 0 V

Figure 5

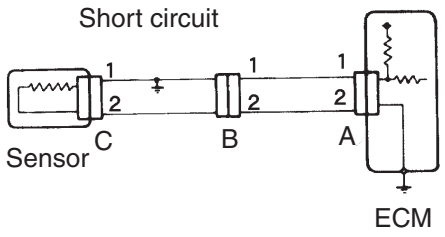

3. Short circuit inspection
(1) As shown in Fig. 5, a "Ground resistance inspection" is performed if there is a short circuit of a wire harness ground to determine the location of the cause.

Figure 6

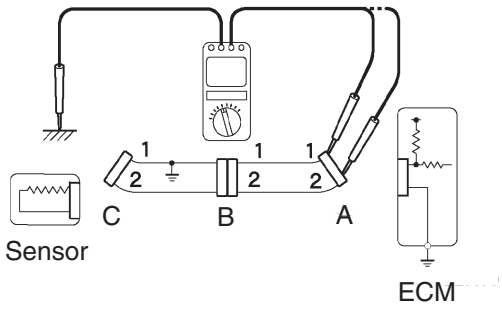

(2) Ground resistance inspection
(a) Disconnect connectors A and C, and measure the resistance between terminals 1 and 2 of connector A, and chassis ground.
Standard value: 10 k Ωor more
NOTE:
Measure the resistance while lightly shaking the wire harnesses up/down and left/right.
(b) For cases shown in Fig. 6, there is a short circuit between terminals 1 of connectors A and C if the resistance is less than 1 Ω(short circuit) between terminal 1 of connector A and chassis ground, and the resistance between terminal 2 of connector A and chassis ground is 10 kΩ or more.

Figure 7

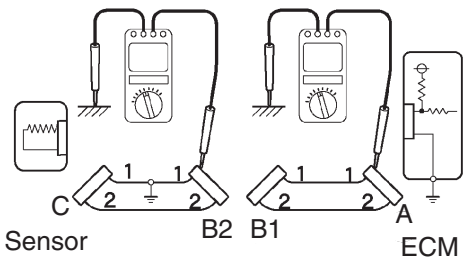

(c) Disconnect connector B, and measure the resistance between terminal 1 of connector A and chassis ground, and between terminal 1 of connector B2 and chassis ground. There is a short circuit between terminals 1 of connectors B2 and C if the resistance is 10 kΩ or more between terminal 1 of connector A and chassis ground, and the resistance between terminal 1 of connector B2 and chassis ground is less than 1 Ω(short circuit).

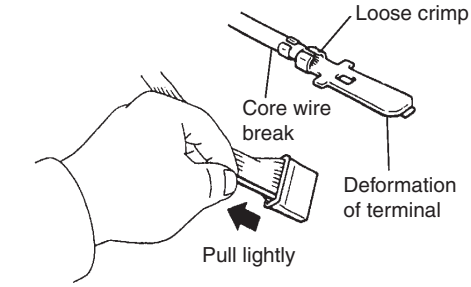

4. Visual and contact pressure inspection
   (1) Disconnect the connectors on both sides.
   (2) Check that there is no rust or foreign material adhering to the connector terminals.
   (3) Check that rounded parts are not loose or damaged, and that the terminal is firmly secured in the lock position.
   NOTE:
   Make sure that the terminal does not release when slightly pulled from the rear.
   (4) Insert a male test terminal into the female terminal and pull it out.
   NOTE:
   If it easier to pull out the test terminal in comparison with other terminals, this indicates that the contact of this part is poor.

5. ECM inspection and replacement
   CAUTION:
   - With the connector connected to the ECM, check from the rear of the connector on the wire harness side.
   - Inspections for which no inspection conditions are indicated, perform with the engine stopped and with IG ON.

Sample:

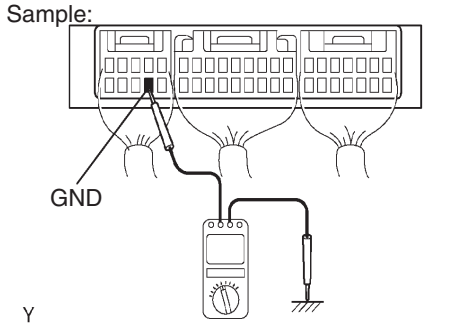

(1) First test the ECM ground circuit and repair if there is any fault. If normal, it indicates that the ECM is faulty. Replace with a normal ECM and check if there are any malfunction phenomenon present.
(a) Measure the resistance between the ECM ground terminal and chassis ground.
Standard value: Less than 1 Ω

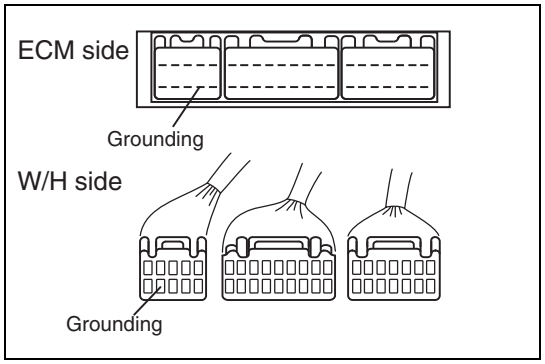

(b)Disconnect the ECM connector, check that there is no bending of the ground terminals on the ECM and wire harness sides, and measure the contact pressure.

Terminology list

Abbreviations

Abbreviation	Unabbreviated word(s)	Description
ABS	Antilock Brake System	Antilock brake system
A/C	Air Conditioner	Air conditioner
ACC	Accessory	Accessory
ACIS	Acoustic Control Induction System	Variable induction system (acoustic oscillation availability type)
ACM	Active Control Engine Mount	Active control engine mount
ACSD	Automatic Cold Start Device	Automatic cold start device
ACV	Air Control Valve	Air control valve
ADD	Automatic Disconnecting Differential	Automatic disconnecting differential
A/F	Air-Fuel Ratio	Air / fuel ratio
AFS	Adaptive Front-Lighting System	Adaptive front-lighting system
AHC	Active Height Control Suspension	Active height control suspension
AI	Artificial Intelligence	Artificial intelligence
ALT	Alternator	Alternator
AMP	Amplifier	Amplifier
ANT	Antenna	Antenna
API	American Petroleum Institute	American Petroleum Institute
ASL	Automatic Sound Levelizer	Automatic sound levelizer
ASSY	Assembly	Assembly
ASV	Air Switching Valve	Air switching valve
A/T	Automatic Transmission (Transaxle)	Automatic transmission, automatic transaxle
ATF	Automatic Transmission Fluid	Automatic transmission fluid
AV	Audio & Visual	Audio & Visual
AVC-LAN	Audio Visual Communication-Local Area Network	Audio visual communication - local area network
AVCS	Active Valve Control System	Active valve control system
AVS	Adaptive Variable Suspension System	Adaptive variable suspension system
AWD	All Wheel Drive	All wheel drive
+B	Battery Plus	Battery positive
BA	Brake Assist	Brake assist
BEAN	Body Electronics Area Network	Large-scale multiplex communication system for vehicle body
BTDC	Before Top Dead Center	Before top dead center
BVSV	Bimetallic Vacuum Switching Valve	Bimetallic vacuum switching valve
CAN	Controller Area Network	Controller area network
CB	Circuit Breaker	Circuit breaker
CCD	Charge Coupled Device	Charge coupled device
CD	Compact Disc	Compact disc
CRAWL	Crawl Control	Crawl control
CRT	Cathode-Ray Tube	Cathode-ray tube
CRS	Child Restraint System	Child restraint seat anchorage
CTR	Center	Center
CVT	Continuously Variable Transmission	Continuously variable transmission
DCM	Data Communication Module	Data communication module
DLC	Data Link Connector	Data link connector
DLI	Distributorless Ignition	Distributorless ignition
DSP	Digital Sound Processor	Digital sound processor
DTC	Diagnostic Trouble Code	Diagnostic codes
DVD	Digital Versatile Disc	Digital versatile disc
D-4S	Direct injection 4stroke gasoline engine Superior version	Direct injection engine
EACV	Electric Air Control Valve	Electric air control valve
EBD	Electronic Brake force Distribution	Electronic brake force distribution
ECB	Electronically Controlled Brake System	Electronically controlled brake system

Abbreviation	Unabbreviated word(s)	Description
ECT	Electronic Controlled Automatic Transmission	Electronic control transmission
ECM	Electronic Control Module	Electronic control module
EDU	Electronic Driver Unit	Electronic driver unit
EFI	Electronic Fuel Injection	Electronic fuel injection
EGR	Exhaust Gas Recirculation	Exhaust gas recirculation system
ELR	Emergency Locking Retractor	Emergency locking retractor
EMV	Electro Multi Vision System	Electro multi-vision system
EPS	Electric Power Steering	Electric power steering
ESA	Electronic Spark Advance	Electronic spark advance
ETC	Electronic Toll Collection System	Electronic toll collection system
ETCS-i	Electronic Throttle Control System-intelligent	Electronically controlled throttle system
EX	Exhaust	Exhaust
FIPG	Formed In Place Gasket	Formed in place gasket
FL	Fusible Link	Fusible link
FP	Fuel Pump	Fuel pump
FR	Front	Front
GPS	Global Positioning System	Global positioning system
HCV	Heat Control Valve	Heat control valve
HDD	Hard Disc Drive	Hard disc drive
HIC	Hot Idle Compensator	Hot idle compensator
HID	High Intensity Discharge (Headlight)	High intensity discharge headlight
HUD	Head-Up Display	Head-up display
HV	Hybrid Vehicle	Hybrid vehicle
IACV	Intake Air Control Valve	Intake air control valve
IC	Integrated Circuit	Integrated circuit
IG	Ignition	Ignition
IN	Intake	Intake
IPA	Intelligent Parking Assist	Intelligent parking assist
I/P	Instrument Panel	Instrument panel
IRS	Independent Rear Suspension	Independent rear suspension
ISC	Idle Speed Control	Idle speed control device
ISCV	Idle Speed Control Valve	Idle speed control valve
J/B	Junction Block	Junction block
J/C	Junction Connector	Junction connector
LAN	Local Area Network	Local area network
LED	Light-Emitting Diode	Light-emitting diode
LH	Left Hand	Left hand
LIN	Local Interconnect Network	Local interconnect network
LKA	Lane Keeping Assist	Lane keeping assist
LLC	Long-Life Coolant	Long life coolant
LSD	Limited Slip Differential	Limited slip differential
LSP & BV	Load Sensing Proportioning and Bypass Valve	Load sensing proportioning & bypass valve
LSPV	Load Sensing Proportioning Valve	Load sensing proportioning valve
MPX	Multiplex Communication System	Multiplex network (multiplex communication system for vehicle body)
M/T	Manual Transmission (Transaxle)	Manual transmission, manual transaxle
OCV	Oil Control Valve	Oil control valve
O/D	Overdrive	Overdrive
OPT	Option	Option
O/S	Oversize	Oversize
PCS	Pre Crash Safety	Pre-crash safety
PCV	Positive Crankcase Ventilation	Positive crankcase ventilation
PKB	Parking Brake	Parking brake
PPS	Progressive Power Steering	Progressive power steering

Abbreviation	Unabbreviated word(s)	Description
PRV	Pressure Regulator Valve	Pressure regulator valve
P/S	Power Steering	Power steering
P/W	Power Window	Power window
R & P	Rack and Pinion	Rack & pinion
R/B	Relay Block	Relay block
RAM	Random Access Memory	Random access memory
RH	Right Hand	Right hand
ROM	Read-Only Memory	Read-only memory
RR	Rear	Rear
SAE	Society of Automotive Engineers	Society of Automotive Engineers
SCV	Swirl Control Valve	Swirl control valve
S/D	Sport Drive	Sport drive
SOC	State Of Charge	State of charge
SPV	Spill Control Valve	Spill control valve
SRS	Supplemental Restraint System	Supplemental restraint system
SSM4	Subaru Select Monitor 4	Subaru Select Monitor 4
SST	Special Service Tool	Special service tool
STD	Standard	Standard
SW	Switch	Switch
T=	Torque	Tightening torque
TDC	Top Dead Center	Top dead center
TRC	Traction Control	Traction control
U/S	Undersize	Undersize
VCV	Vacuum Control Valve	Vacuum control valve
VDIM	Vehicle Dynamics Integrated Management	Vehicle dynamics integrated management
VGRS	Variable Gear Ratio Steering	Continuously variable gear ratio steering mechanism
VICS	Vehicle Information and Communication System	Vehicle information and communication system
VSC	Vehicle Stability Control	Vehicle stability control
VSV	Vacuum Switching Valve	Vacuum switching valve
VTV	Vacuum Transmitting Valve	Vacuum transmitting valve
VVT-i	Variable Valve Timing-intelligent	Continuously variable valve timing mechanism
W/	With	With (A W/B: A including B)
W/H	Wire Harness	Wire harness

IN

Preparation items

Engine control
SST PP-5
General tool PP-6
Lubricant, etc. PP-6

Engine mechanical
SST PP-7
General tool PP-10
Lubricant, etc. PP-10

Fuel
SST PP-12
General tool PP-13
Lubricant, etc. PP-13

Emission control
SST PP-14
General tool PP-14
Lubricant, etc. PP-14

Intake / exhaust
SST PP-15

Cooling
SST PP-17
General tool PP-17
Lubricant, etc. PP-17

Lubrication
SST PP-18
General tool PP-18
Lubricant, etc. PP-18

Starting
SST PP-19
General tool PP-19

Cruise control
SST PP-20
General tool PP-20

Automatic transmission / transaxle
SST PP-21
General tool PP-28
Lubricant, etc. PP-28

Clutch
SST PP-29
General tool PP-29
Lubricant, etc. PP-29

Manual transmission / transaxle
SST PP-30

Lubricant, etc. PP-30

Drive shaft / propeller shaft
SST PP-31
General tool PP-31
Lubricant, etc. PP-32

Axle / differential
SST PP-33
General tool PP-49
Lubricant, etc. PP-49

Wheel alignment
General tool PP-50

Front suspension
SST PP-51
General tool PP-52

Rear suspension
SST PP-53
General tool PP-54

Tire pressure monitoring
SST PP-55
General tool PP-55

Wheel & tire
General tool PP-56

Brake control
SST PP-57
General tool PP-57

Brake system / pedal / brake booster device
General tool PP-58
Lubricant, etc. PP-58

Front brake
SST PP-59
General tool PP-59
Lubricant, etc. PP-59

Rear brake
General tool PP-60
Lubricant, etc. PP-60

Parking brake
General tool PP-61
Lubricant, etc. PP-61

Power assisted system
SST PP-62
General tool PP-62

Steering column
SST PP-63
General tool PP-63

Steering gear / linkage
SST PP-64
General tool PP-64

Lubricant, etc. PP-65

Audio system / visual system
General tool PP-66

Battery / charging
SST PP-67
General tool PP-67

Power supply & wire harness
SST PP-68
General tool PP-68

Network / communication system
SST PP-69
General tool PP-69

Door lock
SST PP-70
General tool PP-70
Lubricant, etc. PP-70

Anti-theft system / smart entry & start system
SST PP-71
General tool PP-71

Lighting (interior)
SST PP-72
General tool PP-72

Meter
SST PP-73
General tool PP-73

SRS airbag
SST PP-74
General tool PP-78

Seat
General tool PP-79

Seat belt
SST PP-80
General tool PP-80

Air conditioner
SST PP-81
General tool PP-81
Lubricant, etc. PP-82

Instrument panel / body interior
General tool PP-83

Glass & window
SST PP-84
General tool PP-84
Lubricant, etc. PP-84

Door / trunk
SST PP-85
General tool PP-85
Lubricant, etc. PP-85

Outer mirror
General tool PP-86

Wipers & washers
General tool PP-87
Lubricant, etc. PP-87

Lighting (exterior)
SST PP-88
General tool PP-88

Horn
General tool PP-89

Body exterior
General tool PP-90
Lubricant, etc. PP-90

Engine control

SST

Illustration	Tool number	Name	Remarks
 STSSM4	—	Subaru Select Monitor 4	Used for various settings and diagnosing electrical system failure. NOTE: For detailed operation procedures of the Subaru Select Monitor 4, refer to "PC application help".
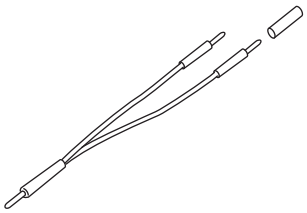 LI-01624	09843-18040	Diagnostic check wire No. 2	Used for inspection of intake air flow meter SUB-ASSY.
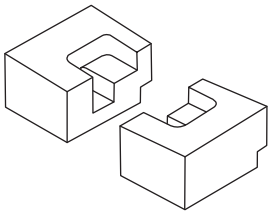 ST18632AA020	18632AA020	STAND ASSY	• Used for removing and installing ignition coil ASSY. • Used for removing and installing spark plug.
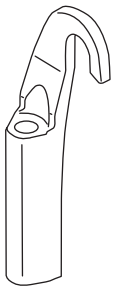 ST1228138150	12281-38150	ENGINE HANGER NO. 1	• Used for removing and installing ignition coil ASSY. • Used for removing and installing spark plug.

PP

PP

Illustration	Tool number	Name	Remarks
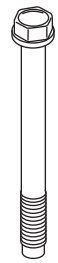 ST9011914120	90119-14120	BOLT	• Used for removing and installing ignition coil ASSY. • Used for removing and installing spark plug.
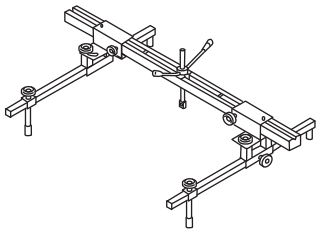 ST99099AJ000	99099AJ000	ENGINE HANGER	• Used for removing and installing ignition coil ASSY. • Used for removing and installing spark plug.
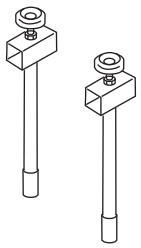 ST18679AA020	18679AA020	ADJUSTER	• Used for removing and installing ignition coil ASSY. • Used for removing and installing spark plug.

General tool

Tool name	Remarks
Circuit tester	Used for measuring resistance, voltage and current.
Union nut wrench (19 mm) {0.748 in}	Used for removing and installing engine water temperature sensor.
Deep socket wrench (19 mm) {0.748 in}	Used for removing and installing engine oil temperature sensor.
DST-i	Used with the Subaru Select Monitor 4.

Lubricant, etc.

Name	Part number	Location of use
Rope	—	Ignition coil ASSY
SUBARU Super Coolant (dilution type)	K0670Y0001	Coolant
Cooling system conditioner	S0A345001	—
Thermometer	—	Engine water temperature sensor, engine oil temperature sensor

Engine mechanical

SST

Illustration	Tool number	Name	Remarks
 STSSM4	—	Subaru Select Monitor 4	Used for various settings and diagnosing electrical system failure. NOTE: For detailed operation procedures of the Subaru Select Monitor 4, refer to "PC application help".
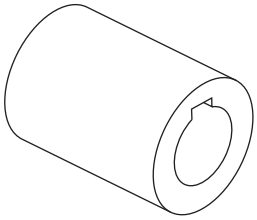 ST18252AA000	18252AA000	CRANKSHAFT SOCKET	Used for rotating crankshaft.
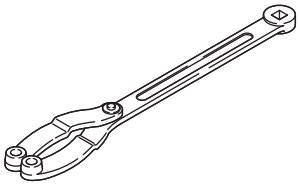 ST18355AA000	18355AA000	PULLEY WRENCH	• Used for removing and installing crankshaft pulley. • Used for removing and installing water pump pulley. • Used for removing and installing cam sprocket.
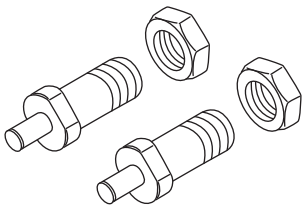 ST18334AA020	18334AA020	PULLEY WRENCH PIN SET	Used for removing and installing cam sprocket.

PP

Illustration	Tool number	Name	Remarks
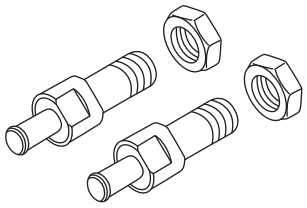 ST18334AA030	18334AA030	PULLEY WRENCH PIN SET	Used for removing and installing water pump pulley.
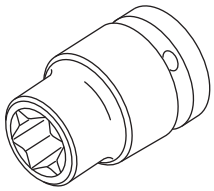 ST18270KA010	18270KA010	SOCKET	Used for removing and installing intake cam sprocket and exhaust cam sprocket.
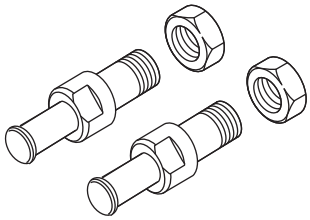 ST18334AA000	18334AA000	PULLEY WRENCH PIN SET	• Used for removing and installing crankshaft pulley. • Used for removing and installing drive plate & ring gear SUB-ASSY and flywheel SUB-ASSY.
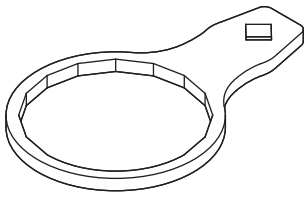 ST18332AA020	18332AA020	OIL FILTER WRENCH	Used for removing and installing oil filter.

Illustration	Tool number	Name	Remarks
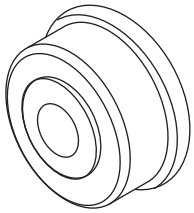 ST41399FG020	41399FG020	SPECIAL TOOL B	Used for installing chain cover oil seal.
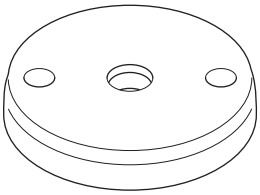 ST18671AA020	18671AA020	OIL SEAL GUIDE	Used for installing engine rear oil seal.
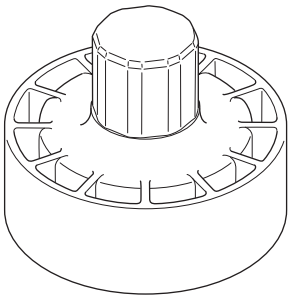 ST18657AA030	18657AA030	OIL SEAL INSTALLER	Used for installing engine rear oil seal.
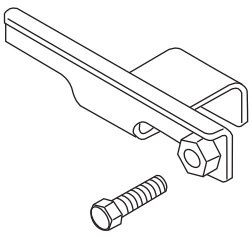 ST18750AA010	18750AA010	STOPPER	Used for securing torque converter.

PP

Illustration	Tool number	Name	Remarks
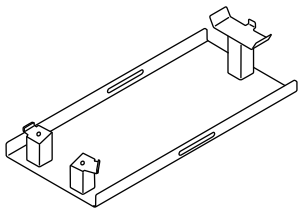 ST18632AA010	18632AA010	STAND ASSY	Used for removing and installing engine ASSY.
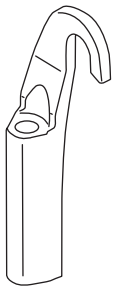 ST1228138150	12281-38150	ENGINE HANGER NO. 1	Used for removing and installing engine ASSY.
 ST9011914120	90119-14120	BOLT	Used for removing and installing engine ASSY.

General tool

Tool name	Remarks
Compression gauge	Used for measuring compression.
Compression gauge attachment	Used for measuring compression.
Thickness gauge	Used for measuring camshaft clearance.
Micrometer	Used for measuring camshaft clearance.
ANGLE GAUGE	Used for angle tightening.
Hexagon wrench (diameter: 2.5 mm {0.0984 in})	Used for securing chain tensioner NO. 1.
Socket hexagon (5 mm {0.197 in})	Used for removing and installing chain guide.
Torx® bit T45	Used for removing and installing oil pan upper.
Torx Plus® socket wrench 40IP	Used for removing and installing fuel pump ASSY.
Oil pan seal cutter	Used for removing oil pan.
DST-i	Used with the Subaru Select Monitor 4.

Lubricant, etc.

Name	Part number	Location of use
Wire (diameter: approx. 1.3mm {0.05 in})	—	Chain tensioner NO. 2

Name	Part number	Location of use
THREE BOND 1217G, THREE BOND 1217H, or equivalent	K0877Y0100 (THREE BOND 1217G)	• Front camshaft cap, intake rear camshaft cap, and exhaust rear camshaft cap • Cam carrier • Cylinder head gasket NO. 2 • Rocker cover RH and rocker cover LH • Cylinder head plate RR • Vacuum pump ASSY • Oil pan upper • Oil pan
Rope	—	Exhaust pipe ASSY FR
Compressor oil (ND-OIL8)	—	Compressor ASSY, suction hose SUB-ASSY

Fuel

SST

Illustration	Tool number	Name	Remarks
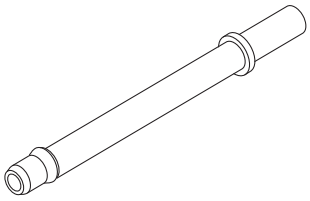 ST18471AA000	18471AA000	FUEL PIPE ADAPTER	Used for removing fuel.
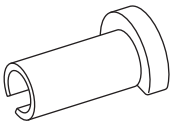 ST42099AE000	42099AE000	QUICK CONNECTOR RELEASE	Used for disconnecting fuel hose.
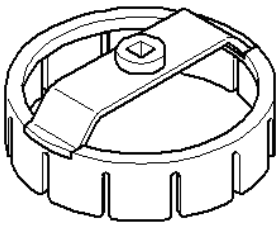 ST42099CA000	42099CA000	ST FUEL PUMP	• Used for removing and installing fuel pump ASSY. • Used for removing and installing fuel sender gauge ASSY.
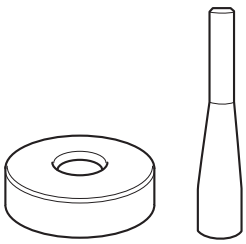 ST0926039020	09260-39020	INJECTOR TOOL SET	Used for installing fuel injector seal.

Illustration	Tool number	Name	Remarks
 STSSM4	—	Subaru Select Monitor 4	Used for various settings and diagnosing electrical system failure. NOTE: For detailed operation procedures of the Subaru Select Monitor 4, refer to "PC application help".

General tool

Tool name	Remarks
Fuel pressure meter	Used for measuring fuel pressure.
Circuit tester	Used for measuring resistance, voltage and current.
Union nut wrench (17 mm {0.669 in})	Used for removing and installing fuel delivery pipe and fuel delivery pipe NO. 2.
Torx Plus® socket wrench 40IP	Used for removing and installing fuel pump ASSY.
Socket hexagon (6mm {0.236in})	Used for removing and installing pump drive case ASSY.
Transmission jack	Used for removing and installing fuel tank.
DST-i	Used with the Subaru Select Monitor 4.

Lubricant, etc.

Name	Part number	Location of use
THREE BOND 1217G, THREE BOND 1217H, or equivalent	K0877Y0100 (THREE BOND 1217G)	Pump drive case ASSY
Butyl tape	—	Rear floor service hole cover, rear floor service hole cover NO. 2

Emission control

SST

Illustration	Tool number	Name	Remarks
 STSSM4	—	Subaru Select Monitor 4	Used for various settings and diagnosing electrical system failure. NOTE: For detailed operation procedures of the Subaru Select Monitor 4, refer to "PC application help".

General tool

Tool name	Remarks
Mightyvac	Used for inspecting fuel outlet valve ASSY.
Circuit tester	Used for measuring resistance, voltage and current.
Deep socket wrench (19 mm {0.748 in})	Used for removing and installing PCV valve.
DST-i	Used with the Subaru Select Monitor 4.

Lubricant, etc.

Name	Part number	Location of use
THREE BOND 1324 or equivalent	004403042	PCV valve

Intake / exhaust

SST

Illustration	Tool number	Name	Remarks
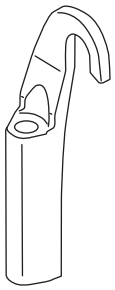 ST1228138150	12281-38150	ENGINE HANGER NO. 1	Used for removing and installing exhaust pipe SUB-ASSY FR.
 ST9011914120	90119-14120	BOLT	Used for removing and installing exhaust pipe SUB-ASSY FR.
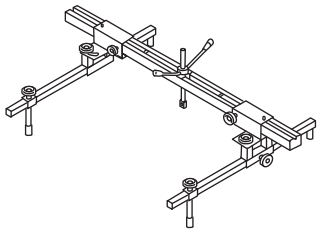 ST99099AJ000	99099AJ000	ENGINE HANGER	Used for removing and installing exhaust pipe SUB-ASSY FR.
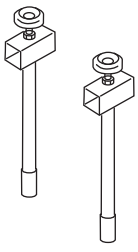 ST18679AA020	18679AA020	ADJUSTER	Used for removing and installing exhaust pipe SUB-ASSY FR.

Illustration	Tool number	Name	Remarks
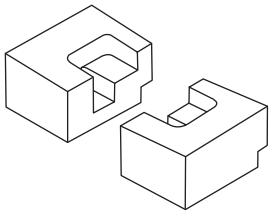 ST18632AA020	18632AA020	STAND ASSY	Used for removing and installing exhaust pipe SUB-ASSY FR.

Cooling

SST

Illustration	Tool number	Name	Remarks
 STSSM4	—	Subaru Select Monitor 4	Used for various settings and diagnosing electrical system failure. NOTE: For detailed operation procedures of the Subaru Select Monitor 4, refer to "PC application help".
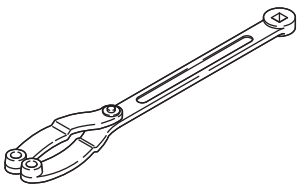 ST18355AA000	18355AA000	PULLEY WRENCH	Used for removing and installing water pump pulley.
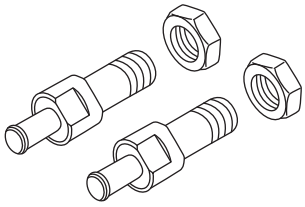 ST18334AA030	18334AA030	PULLEY WRENCH PIN SET	Used for removing and installing water pump pulley.

General tool

Tool name	Remarks
Radiator cap tester	Used for inspecting radiator and radiator cap.
Circuit tester	Used for measuring resistance, voltage and current.
DST-i	Used with the Subaru Select Monitor 4.

Lubricant, etc.

Name	Part number	Location of use
SUBARU Super Coolant (concentration type)	—	Coolant
SUBARU Super Coolant (dilution type)	K0670Y0001	Coolant
Water for dilution (distilled water)	—	Coolant
Cooling system conditioner	S0A345001	—
Thermometer	—	Thermostat
Caliper gauge	—	Thermostat

Lubrication

SST

Illustration	Tool number	Name	Remarks
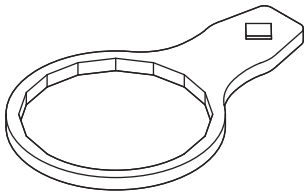 ST18332AA020	18332AA020	OIL FILTER WRENCH	Used for removing and installing oil filter.

PP

General tool

Tool name	Remarks
Oil pressure gauge	Used for measuring oil pressure.
Deep socket wrench (24mm {0.945in})	Used for removing and installing engine oil pressure switch ASSY.
Deep socket wrench (19 mm {0.748 in})	Used for removing and installing engine oil temperature sensor.

Lubricant, etc.

Name	Part number	Location of use
THREE BOND 1324 or equivalent	004403042	Engine oil pressure switch ASSY
THREE BOND 1217G, THREE BOND 1217H, or equivalent	K0877Y0100 (THREE BOND 1217G)	Chain cover

Starting

SST

Illustration	Tool number	Name	Remarks
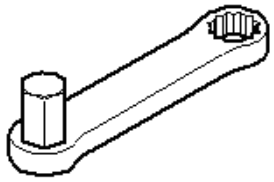 ST18283AA000	18283AA000	ADAPTER WRENCH	Used for tightening upper mounting bolt of starter ASSY.

General tool

Tool name	Remarks
AC/DC probe 400A	Used for measuring starter driving current.
Circuit tester	Used for measuring resistance, voltage and current.

Cruise control

SST

Illustration	Tool number	Name	Remarks
 STSSM4	—	Subaru Select Monitor 4	Used for various settings and diagnosing electrical system failure. NOTE: For detailed operation procedures of the Subaru Select Monitor 4, refer to "PC application help".

General tool

Tool name	Remarks
Circuit tester	Used for measuring resistance, voltage and current.
DST-i	Used with the Subaru Select Monitor 4.

Automatic transmission / transaxle

SST

Illustration	Tool number	Name	Remarks
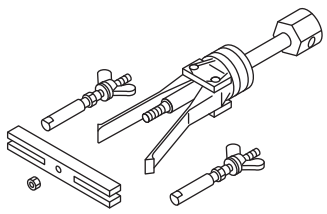 ST-398527700	398527700	PULLER ASSY	Used for removing extension housing rear oil seal.
 ST0932540010	09325-40010	TRANSMISSION OIL PLUG	Used for installing extension housing rear oil seal.
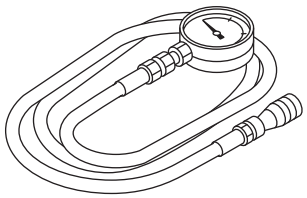 ST-498575400	498575400	PRESSURE GAUGE ADAPTER	Used when measuring hydraulic pressure for line pressure.
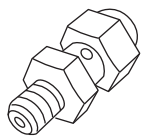 ST18681AA040	18681AA040	OIL PRESSURE GAUGE ADAPTER	Used when measuring hydraulic pressure for line pressure.

PP

PP

Illustration	Tool number	Name	Remarks
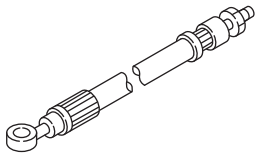 ST-498897700	498897700	PRESSURE GAUGE ADAPTER SET	Used when measuring hydraulic pressure for line pressure.
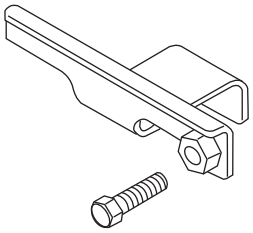 ST18750AA010	18750AA010	STOPPER	• Used for removing automatic transmission ASSY from engine and installing it to engine. • Used for preventing torque converter from falling.
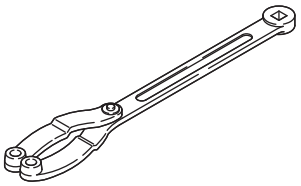 ST18355AA000	18355AA000	PULLEY WRENCH	Used for securing crank pulley.
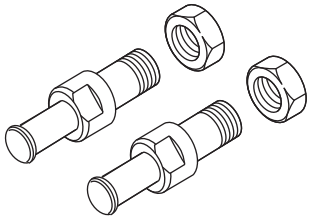 ST18334AA000	18334AA000	PIN SET	Used for securing crank pulley.

Illustration	Tool number	Name	Remarks
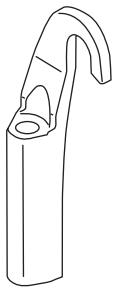 ST1228138150	12281-38150	ENGINE HANGER	Used for removing and installing automatic transmission ASSY.
 ST9011914120	90119-14120	BOLT	Used for removing and installing automatic transmission ASSY.
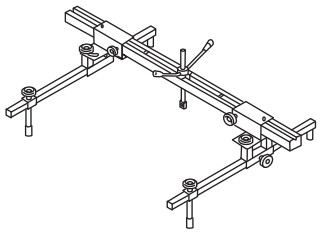 ST99099AJ000	99099AJ000	ENGINE HANGER	Used for removing and installing automatic transmission ASSY.
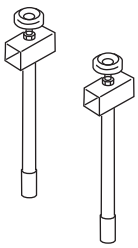 ST18679AA020	18679AA020	ADJUSTER	Used for removing and installing automatic transmission ASSY.

PP

Illustration	Tool number	Name	Remarks
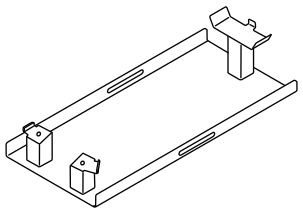 ST18632AA010	18632AA010	STAND ASSY	Used for removing and installing automatic transmission ASSY.
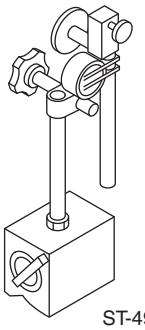 ST-498247001	498247001	MAGNET BASE	Used for measuring runout, etc.
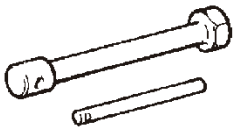 ST0935132010	09351-32010	TOOL ONE-WAY CLUTCH TEST	Used for unit inspection of torque converter.
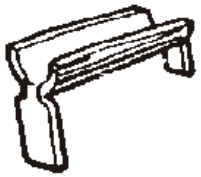 ST0935132020	09351-32020	STOPPER STATOR	Used for unit inspection of torque converter.

Illustration	Tool number	Name	Remarks
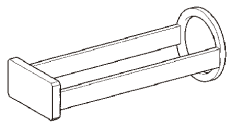 ST0938700110	09387-00110	CLUTCH COMPRESSION WRENCH	Used for removing and installing NO. 1 clutch balancer.
 ST0932089010	09320-89010	COMPRESSOR TRANSFER CLUTCH SPR	Used for removing and installing direct clutch piston SUB-ASSY.
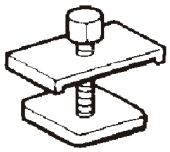 ST0935007050	09350-07050	COMPRESSOR PISTON SPR NO. 3	Used for removing and installing 1st & reverse brake return spring SUB-ASSY.
 ST0935007080	09350-07080	PULLER BRAKE REACTION SLEEVE	Used for removing brake reaction sleeve.

PP

Illustration	Tool number	Name	Remarks
 ST0935007090	09350-07090	BRAKE NO. 1 PISTON PULLER	Used for removing NO. 4 brake piston.
 ST0935006120	09350-06120	MEASURE TERMINAL NO. 2	Used for measuring piston stroke of NO. 2 brake.
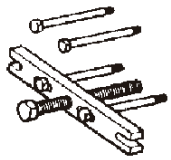 ST0935007020	09350-07020	OIL PUMP PULLER	Used for installing NO. 2 brake piston return spring SUB-ASSY.
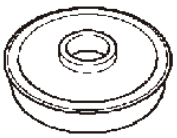 ST0935104020	09351-04020	SPRING COMPRESSOR NO. 1	Used for installing brake piston return spring SUB-ASSY.

Illustration	Tool number	Name	Remarks
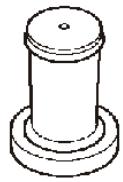 ST0935104010	09351-04010	PIPE	Used for installing brake piston return spring SUB-ASSY.
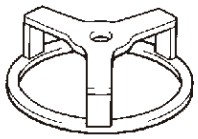 ST0938700070	09387-00070	WRENCH 1st & Rev BRAKE	Used for installing No. 3 clutch balancer.
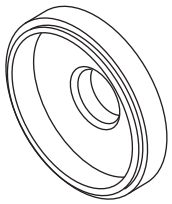 ST18762AA020	18762AA020	COMPRESSOR SPECIAL TOOL	Used when assembling NO. 2 brake.
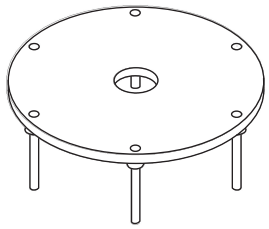 ST18762AA030	18762AA030	COMPRESSOR SPECIAL TOOL	Used for disassembling NO. 3 brake cylinder ASSY.

Illustration	Tool number	Name	Remarks
 STSSM4	—	Subaru Select Monitor 4	Used for various settings and diagnosing electrical system failure. NOTE: For detailed operation procedures of the Subaru Select Monitor 4, refer to "PC application help".

General tool

Tool name	Remarks
Thickness gauge	Used for adjusting select lever.
Socket hexagon	Used for adjusting and replacing automatic transmission fluid.
Dial gauge	Used for measuring runout, etc.
Roller probe	Used for measuring runout, etc.
Caliper gauge	Used for measuring clearance of each part, etc.
Screw shackle	Automatic transmission ASSY
Circuit tester	Used for measuring resistance, voltage and current.
DST-i	Used with the Subaru Select Monitor 4.

Lubricant, etc.

Name	Part number	Location of use
Auto fluid WS	—	• Automatic transmission • O-ring • Oil seal
Paint	—	Automatic transmission ASSY
THREE BOND 1281 or equivalent	—	Extension housing
THREE BOND 1344 or equivalent	—	• Fixing bolt for extension housing • Fixing bolt for automatic transmission housing • Fixing bolt for neutral start switch ASSY

Clutch

SST

Illustration	Tool number	Name	Remarks
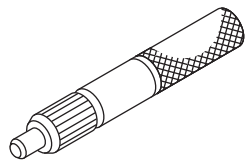 ST-499747100	499747100	CLUTCH DISC GUIDE	Used for installing clutch disc.

General tool

Tool name	Remarks
Depth gauge	Used for measuring clutch disc wear.
Dial gauge	Used for measuring clutch disc runout.
Circuit tester	Used for measuring resistance, voltage and current.
Caliper gauge	Used for measuring facing.

Lubricant, etc.

Name	Part number	Location of use
FMVSS No.116 DOT3 or equivalent	K0579GA100	Clutch system
NICHIMOLY N-130 or equivalent	K0879Y0501	• Clutch release fork • Release fork support
NIGTIGHT LYW No.2 or equivalent	—	• Clutch pedal • Push rod clevis pin
SILICONE GREASE G40M or equivalent	004404003	Clutch master cylinder ASSY

Manual transmission / transaxle

SST

Illustration	Tool number	Name	Remarks
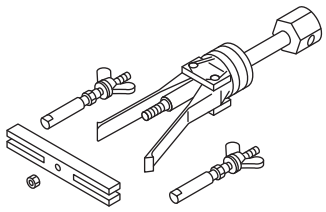 ST-398527700	398527700	PULLER ASSY	Used for removing transmission extension housing oil seal.
 ST0932520010	09325-20010	TRANSMISSION OIL PLUG	• Used for installing transmission extension housing oil seal (MTM). • Used for installing transmission extension housing oil seal.

Lubricant, etc.

Name	Part number	Location of use	Substitute product
MG GEAR OIL SPECIAL-II	0888501513	Used for replacing manual transmission oil.	GL-3 or later (75W-90)

Drive shaft / propeller shaft

SST

Illustration	Tool number	Name	Remarks
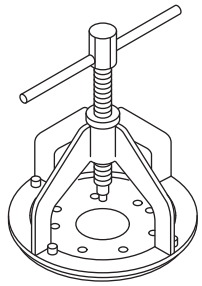 ST-926470000	926470000	AXLE SHAFT PULLER	Used for removing axle shaft.
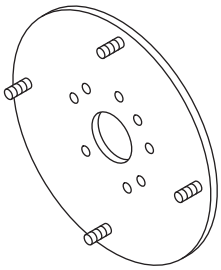 ST28099PA110	28099PA110	AXLE SHAFT PULLER PLATE	Used for removing axle shaft.
 ST0932520010	09325-20010	TRANSMISSION OIL PLUG	Used for removing propeller shaft W/center bearing ASSY.
 ST0932540010	09325-40010	TRANSMISSION OIL PLUG	Used for removing propeller shaft ASSY.

General tool

Tool name	Remarks
Crowbar	Used for removing drive shaft.
Plastic hammer	Used for installing joint boot clamp.
Transmission jack	Used for installing rear differential carrier ASSY.

Tool name	Remarks
Dial gauge	Used for inspecting propeller shaft runout.

Lubricant, etc.

Name	Part number	Location of use
GREASE NKG106 or equivalent	—	Inside of EBJ boot
GREASE NKG814 or equivalent	—	• Inside of EDJ outer race • Shaft and entire inner surface of boot

Axle / differential

SST

Illustration	Tool number	Name	Remarks
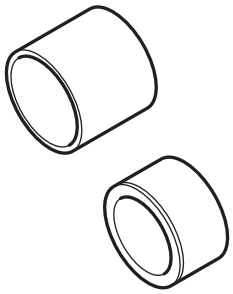 ST20099PA010	20099PA010	INSTALLER & REMOVER	• Used for replacing rear axle carrier bushing. • Used with BUSHING REMOVER.
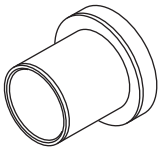 ST20099FG000	20099FG000	BUSHING REMOVER	• Used for replacing rear axle carrier bushing. • Used with INSTALLER & REMOVER.
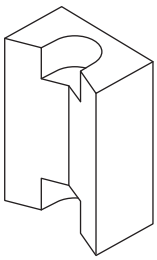 ST28399AG000	28399AG000	HUB STAND	Used for removing hub bolt.
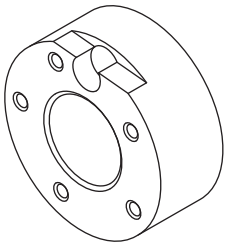 ST-927080000	927080000	HUB STAND	Used for assembling hub bolt.

PP

PP

Illustration	Tool number	Name	Remarks
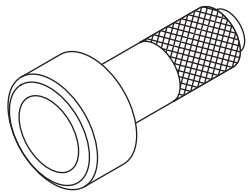 ST-498447120	498447120	INSTALLER	Used for installing rear differential carrier oil seal.
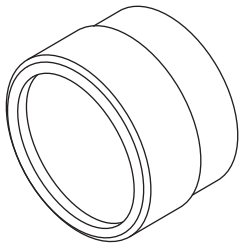 ST-499755502	499755502	PRESS	Used for installing rear differential carrier oil seal.
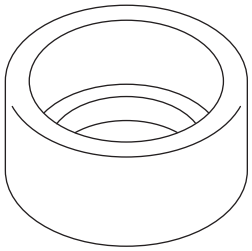 ST20299AG010	20299AG010	PRESS SNAP RING	Used for installing rear differential side gear shaft oil seal.
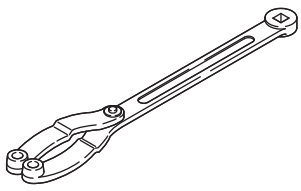 ST18355AA000	18355AA000	PULLEY WRENCH	Used for securing companion flange RR.

Illustration	Tool number	Name	Remarks
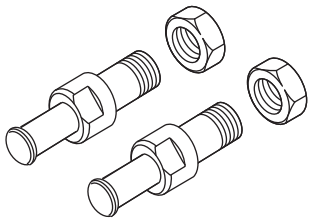 ST18334AA000	18334AA000	PULLEY WRENCH PIN SET	Used for securing companion flange RR.
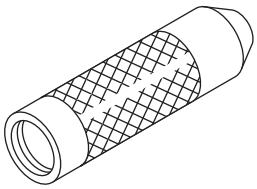 ST-499877000	499877000	RACE 4-5 INSTALLER	Used for removing rear differential dust deflector.
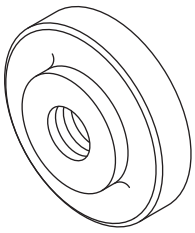 ST-398477702	398477702	DRIFT	Used for installing rear differential case bearing.
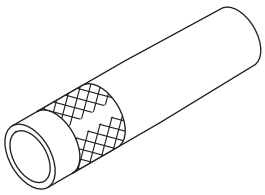 ST-499277200	499277200	INSTALLER	Used for installing rear differential dust deflector.

PP

Illustration	Tool number	Name	Remarks
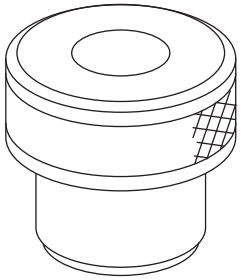 ST-499225500	499225500	GAUGE	Used for installing rear differential dust deflector.
 ST0950422012	09504-22012	DIFFERENTIAL SIDE WASHER REMOVER & REPLACER	Used for removing and installing rear differential side washer.
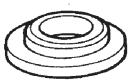 ST0950630012	09506-30012	DIFFERENTIAL DRIVE PINION REAR BEARING CONE REPLACER	Used for installing rear drive pinion tapered roller bearing RR.
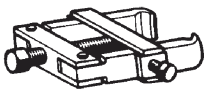 ST0955622010	09556-22010	DRIVE PINION FRONT BEARING REMOVER	Used for removing rear drive pinion tapered roller bearing FR.

Illustration	Tool number	Name	Remarks
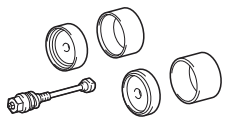 ST41399CA000	41399CA000	REAR DIFFERENTIAL MOUNT CUSHION REMOVER AND REPLACER	Used for removing and installing rear differential mount cushion NO. 2.
 ST41399CA010	(41399CA010)	REMOVER	Used for removing rear differential mount cushion NO. 2.
 ST41399CA020	(41399CA020)	BASE NO. 1	Used for removing rear differential mount cushion NO. 2.
 ST41399CA030	(41399CA030)	BASE NO. 2	Used for installing rear differential mount cushion NO. 2.

PP

Illustration	Tool number	Name	Remarks
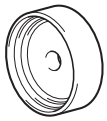 ST41399CA040	(41399CA040)	REPLACER	Used for installing rear differential mount cushion NO. 2.
 ST41399FG050	(41399FG050)	SLEEVE	Used for removing and installing rear differential mount cushion NO. 2.
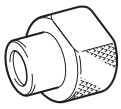 ST41399FG061	(41399FG061)	RING	Used for removing and installing rear differential mount cushion NO. 2.
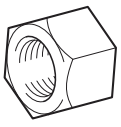 ST41399FG070	(41399FG070)	NUT	Used for removing and installing rear differential mount cushion NO. 2.

Illustration	Tool number	Name	Remarks
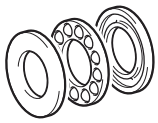 ST41399FG080	(41399FG080)	BEARING	Used for removing and installing rear differential mount cushion NO. 2.
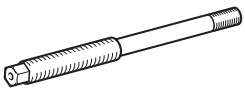 ST41399FG091	(41399FG091)	SHAFT	Used for removing and installing rear differential mount cushion NO. 2.
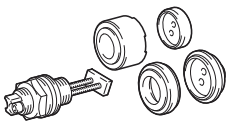 ST41399CA050	41399CA050	REAR DIFFERENTIAL MOUNT CUSHION REMOVER AND REPLACER	Used for removing and installing rear differential mount cushion NO. 1.
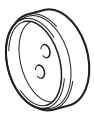 ST41399CA060	(41399CA060)	REMOVER	Used for removing rear differential mount cushion NO. 1.

PP

PP

Illustration	Tool number	Name	Remarks
 ST41399CA070	(41399CA070)	BASE NO. 1	Used for removing rear differential mount cushion NO. 1.
 ST41399CA080	(41399CA080)	BASE NO. 2	Used for installing rear differential mount cushion NO. 1.
 ST41399CA090	(41399CA090)	REPLACER	Used for installing rear differential mount cushion NO. 1.
 ST41399CA100	(41399CA100)	SLEEVE	Used for removing and installing rear differential mount cushion NO. 1.

Illustration	Tool number	Name	Remarks
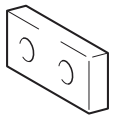 ST41399CA110	(41399CA110)	PLATE	Used for removing and installing rear differential mount cushion NO. 1.
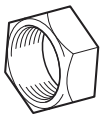 ST41399CA120	(41399CA120)	NUT	Used for removing and installing rear differential mount cushion NO. 1.
 ST41399CA130	(41399CA130)	BEARING	Used for removing and installing rear differential mount cushion NO. 1.
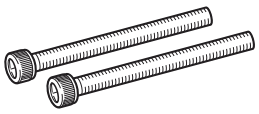 ST41399CA140	(41399CA140)	BOLT	Used for removing and installing rear differential mount cushion NO. 1.

PP

Illustration	Tool number	Name	Remarks
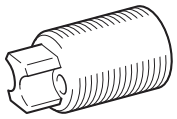 ST41399CA150	(41399CA150)	SHAFT	Used for removing and installing rear differential mount cushion NO. 1.
 ST0971030012	09710-30012	REAR SUSPENSION BUSHING TOOL SET	Used for installing rear differential case bearing.
 ST0971004081	(09710-04081)	BASE	Used for installing rear differential case bearing.
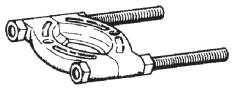 ST0995000020	09950-00020	BEARING REMOVER	• Used for removing rear differential dust deflector. • Used for removing rear drive pinion tapered roller bearing RR.

Illustration	Tool number	Name	Remarks
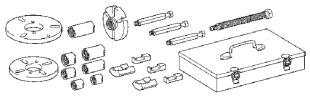 ST0995030012	09950-30012	PULLER A SET	Used for removing and installing rear drive pinion companion flange RR.
 ST0995103010	(09951-03010)	UPPER PLATE	Used for removing and installing rear drive pinion companion flange RR.
 ST0995303010	(09953-03010)	CENTER BOLT	Used for removing and installing rear drive pinion companion flange RR.
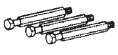 ST0995403010	(09954-03010)	ARM	Used for removing and installing rear drive pinion companion flange RR.

PP

Illustration	Tool number	Name	Remarks
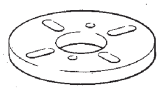 ST0995503030	(09955-03030)	LOWER PLATE 130	Used for removing and installing rear drive pinion companion flange RR.
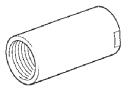 ST0995603030	(09956-03030)	ADAPTER 20	Used for removing and installing rear drive pinion companion flange RR.
 ST0995040011	09950-40011	PULLER B SET	Used for removing rear differential case bearing.
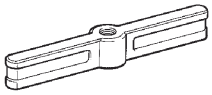 ST0995104020	(09951-04020)	HANGER 200	Used for removing rear differential case bearing.

Illustration	Tool number	Name	Remarks
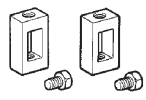 ST0995204010	(09952-04010)	SLIDE ARM	Used for removing rear differential case bearing.
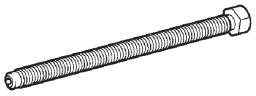 ST0995304030	(09953-04030)	CENTER BOLT 200	Used for removing rear differential case bearing.
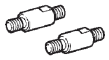 ST0995404010	(09954-04010)	ARM 25	Used for removing rear differential case bearing.
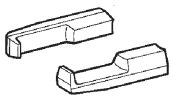 ST0995504061	(09955-04061)	CLAW NO. 6	Used for removing rear differential case bearing.

PP

Illustration	Tool number	Name	Remarks
 ST0995704010	(09957-04010)	ATTACHMENT	Used for removing rear differential case bearing.
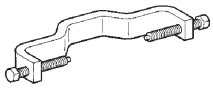 ST0995804011	(09958-04011)	HOLDER	Used for removing rear differential case bearing.
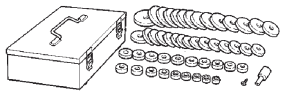 ST0995060010	09950-60010	REPLACER SET	Used for removing rear differential case bearing.
 ST0995100350	(09951-00350)	REPLACER 35	Used for removing rear differential case bearing.

Illustration	Tool number	Name	Remarks
 ST0995100480	(09951-00480)	REPLACER 48	Used for removing rear differential case bearing.
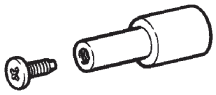 ST0995206010	(09952-06010)	ADAPTER	Used for removing rear differential case bearing.
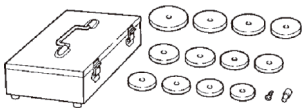 ST0995060020	09950-60020	REPLACER SET NO. 2	• Used for installing rear drive pinion tapered roller bearing FR. • Used for installing rear drive pinion tapered roller bearing RR.
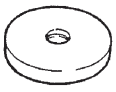 ST0995100720	(09951-00720)	REPLACER 72	Used for installing rear drive pinion tapered roller bearing FR.

PP

PP

Illustration	Tool number	Name	Remarks
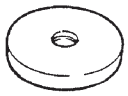 ST0995100890	(09951-00890)	REPLACER 89	Used for installing rear drive pinion tapered roller bearing RR.
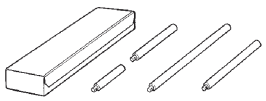 ST0995070010	09950-70010	HANDLE SET	• Used for installing rear drive pinion tapered roller bearing FR. • Used for installing rear drive pinion tapered roller bearing RR.
 ST0995107100	(09951-07100)	HANDLE 100	Used for installing rear drive pinion tapered roller bearing FR.
 ST0995107200	(09951-07200)	HANDLE 200	Used for installing rear drive pinion tapered roller bearing RR.

Illustration	Tool number	Name	Remarks
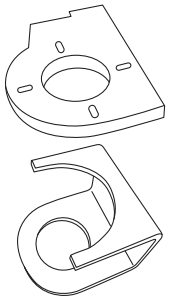 ST41399CA170	41399CA170	SPECIAL TOOL ASSY	Used for installing differential carrier ASSY.

General tool

Tool name	Remarks
Tall transmission jack	Used for removing and installing rear differential carrier ASSY.
Hexagon wrench	Used for removing and installing filler plug and drain plug.
Tire lever	Used for removing rear drive shaft.
Overhaul stand (engine stand)	Used for securing rear differential carrier ASSY.
Tie-rod ball joint puller	Used for disconnecting each joint.
Dial gauge	Used for inspecting axle hub & bearing ASSY.

Lubricant, etc.

Name	Part number	Location of use	Substitute product
Differential gear oil LX (API GL-5, SAE 75W-85)	0888502606	Rear differential carrier ASSY	GL-5 75W-85 or GL-5 75W-90
SHINMYOTAN	—	Hypoid gear	—
THREE BOND 1281 or equivalent	—	Rear differential carrier ASSY	—

Wheel alignment

General tool

Tool name	Remarks
Wheel alignment gauge	Used for measuring wheel alignment.
Wheel alignment gauge adapter	Used for measuring wheel alignment.
Turning radius gauge	Used for measuring wheel alignment.
Side slip tester	Used for measuring side slip.
Toe-in gauge	Used for measuring toe-in.

Front suspension

SST

Illustration	Tool number	Name	Remarks
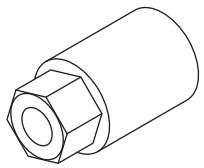 ST20399AG000	20399AG000	STRUT MOUNT SOCKET	Used for disassembling and assembling front suspension support.
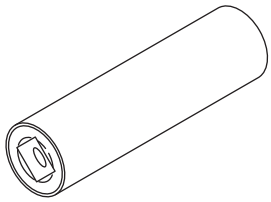 ST20299AG020	20299AG020	STUD BOLT SOCKET	Used for removing and installing front suspension lower arm bolt.
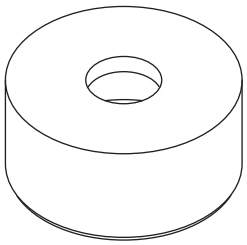 ST20299AG000	20299AG000	REMOVER	Used for replacing front lower arm bushing.
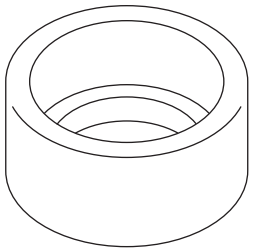 ST20299AG010	20299AG010	BASE	Used for replacing front lower arm bushing.

PP

Illustration	Tool number	Name	Remarks
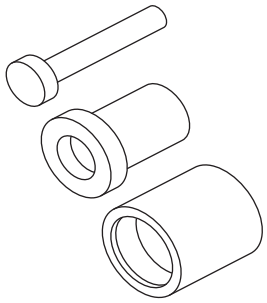 ST-927680000	927680000	INSTALLER & REMOVER SET	Used for replacing front lower arm bushing.

PP

General tool

Tool name	Remarks
Socket hexagon	Used for removing and installing front stabilizer link ASSY.
Deep socket hexagon	Used for disassembling and assembling front suspension.
Coil spring compressor	Used for disassembling and assembling shock absorber.

Rear suspension

SST

Illustration	Tool number	Name	Remarks
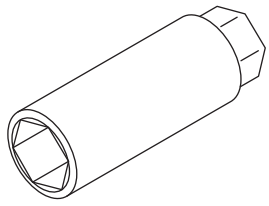 ST20399FG000	20399FG000	STRUT MOUNT SOCKET	Used for disassembling and assembling rear suspension support.
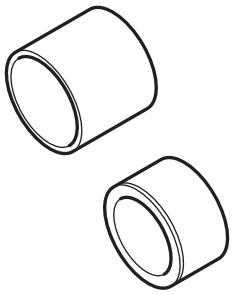 ST20099PA010	20099PA010	INSTALLER & REMOVER	Used for replacing rear suspension arm bushing.
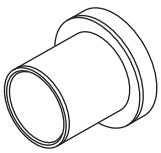 ST20099FG000	20099FG000	BUSHING REMOVER	Used for replacing rear suspension arm bushing.
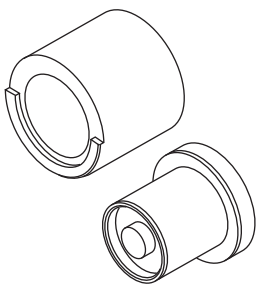 ST20099AE000	20099AE000	INSTALLER & REMOVER	Used for replacing toe control link bushing.

PP

Illustration	Tool number	Name	Remarks
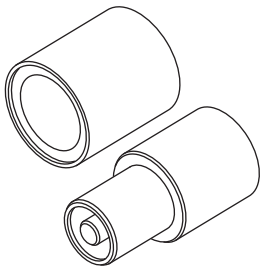 ST20099AE010	20099AE010	INSTALLER & REMOVER	Used for replacing rear lateral link bushing.

General tool

Tool name	Remarks
Coil spring compressor	Used for disassembling and assembling shock absorber.
Deep socket hexagon	Used for disassembling and assembling rear suspension.
Crowfoot wrench	Used for installing rear support to rear shock absorber nut.

TIRE PRESSURE MONITORING

SST

Illustration	Tool number	Name	Remarks
 STSSM4	—	Subaru Select Monitor 4	Used for various settings and diagnosing electrical system failure. NOTE: For detailed operation procedures of the Subaru Select Monitor 4, refer to "PC application help".

General tool

Tool name	Remarks
Circuit tester	Used for measuring resistance, voltage and current.
DST-i	Used with the Subaru Select Monitor 4.

Wheel & tire

General tool

Tool name	Remarks
Dial gauge	Used for measuring wheel runout.
Magnetic base	Used for measuring wheel runout.
Air pressure gauge	Used for measuring tire pressure.

Brake control

SST

Illustration	Tool number	Name	Remarks
 STSSM4	—	Subaru Select Monitor 4	Used for various settings and diagnosing electrical system failure. NOTE: For detailed operation procedures of the Subaru Select Monitor 4, refer to "PC application help".

General tool

Tool name	Remarks
Flare-nut wrench	Used for disconnecting and installing brake tube.
Circuit tester	Used for measuring resistance, voltage and current.
DST-i	Used with the Subaru Select Monitor 4.

Brake system / pedal / brake booster device

General tool

Tool name	Remarks
Pressure gauge	Used for inspecting brake booster function.
Vacuum gauge	Used for inspecting brake booster function and vacuum pump ASSY function.
Pedal force gauge	Used for inspecting brake booster function.
Flare-nut wrench	Used for disconnecting and connecting brake tube.

Lubricant, etc.

Name	Part number	Location of use
NIGTIGHT LYW No.2 or equivalent	—	• Side of brake pedal shaft collar and side of brake pedal return spring • Periphery of push rod pin
Seal gasket 1217G or equivalent	—	Cam carrier (vacuum pump)

Front brake

SST

Illustration	Tool number	Name	Remarks
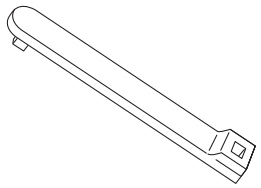 ST0996101270	0996101270	Adapter-torque	Used for installing caliper body ASSY.

General tool

Tool name	Remarks
Flare-nut wrench	Used for disconnecting and connecting brake tube.
Caliper gauge	Used for inspecting brake pad thickness.
Micrometer	Used for inspecting front disc thickness.
Dial gauge	Used for inspecting disc runout.
Magnetic base	Used for inspecting disc runout.

Lubricant, etc.

Name	Part number	Location of use
Rubber grease (RENOLIT rubber grease JP) or equivalent	—	Front disc brake piston
Rubber grease (NIGLUBE RX-2) or equivalent	—	All around the contacting surface of front disc brake cylinder slide pin
MP grease No.2 or equivalent	—	Contact area between brake pad and spring
Disc brake grease II or equivalent	—	Both sides of shim when installing front disc brake pad

Rear brake

General tool

Tool name	Remarks
Flare-nut wrench	Used for disconnecting and connecting brake tube.
Caliper gauge	Used for inspecting brake pad thickness.
Micrometer	Used for inspecting disc thickness.
Dial gauge	Used for inspecting disc runout.
Magnetic base	Used for inspecting disc runout.

Lubricant, etc.

Name	Part number	Location of use
Rubber grease (RENOLIT rubber grease JP) or equivalent	—	Disc brake piston
Rubber grease (NIGLUBE RX-2) or equivalent	—	All around the contacting surface of disc brake cylinder slide pin
MP grease No.2 or equivalent	—	Contact area between brake pad and spring
Disc brake grease II or equivalent	—	Both sides of shim when installing disc brake pad

Parking brake

General tool

Tool name	Remarks
Caliper gauge	Used for inspecting rear disc inner diameter and parking brake shoe lining thickness.
Circuit tester	Used for measuring resistance, voltage and current.

Lubricant, etc.

Name	Part number	Location of use
Brake grease (Molykote 44MA) or equivalent	26648FJ000	• Backing plate • Threaded portion and piece-attaching part of parking brake shoe adjusting screw set

Power assisted system

SST

Illustration	Tool number	Name	Remarks
 STSSM4	—	Subaru Select Monitor 4	Used for various settings and diagnosing electrical system failure. NOTE: For detailed operation procedures of the Subaru Select Monitor 4, refer to "PC application help".

General tool

Tool name	Remarks
Circuit tester	Used for measuring resistance, voltage and current.
DST-i	Used with the Subaru Select Monitor 4.

Steering column

SST

Illustration	Tool number	Name	Remarks
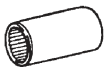 ST0961600011	09616-00011	STEERING WORM BEARING ADJUSTING SOCKET	Used for checking preload.
 STSSM4	—	Subaru Select Monitor 4	Used for various settings and diagnosing electrical system failure. NOTE: For detailed operation procedures of the Subaru Select Monitor 4, refer to "PC application help".

General tool

Tool name	Remarks
Push-pull gauge	Used for measuring folding torque.
Drill	Used for making a hole for the steering lock set bolt.
Reverse tap	Used for removing the steering lock set bolt.
Circuit tester	Used for measuring resistance, voltage and current.
DST-i	Used with the Subaru Select Monitor 4.

Steering gear / linkage

SST

Illustration	Tool number	Name	Remarks
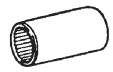 ST0961600011	09616-00011	STEERING WORM BEARING ADJUSTING SOCKET	Used for checking total preload.
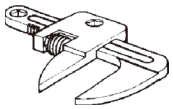 ST0992210010	09922-10010	VARIABLE OPEN WRENCH	Used for removing steering rack end SUB-ASSY and steering rack guide spring cap lock nut.
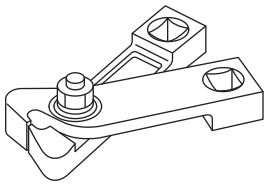 ST28099AC000	28099AC000	BOOT BAND PLIERS	Used for installing steering rack boot clamp NO. 1.
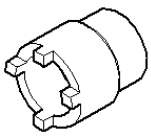 ST34299CA000	34299CA000	SPECIAL TOOL	Used for removing, installing, and adjusting steering gear box yoke plug.

General tool

Tool name	Remarks
Socket hexagon	Used for disconnecting and installing stabilizer link.
Ball joint puller	Used for disconnecting tie-rod end SUB-ASSY.

Lubricant, etc.

Name	Part number	Location of use
THREE BOND 1141G /1102 or equivalent	—	Threaded portion of steering rack guide spring cap
Toshiba silicone TSM650, Idemitsu Autorex A or equivalent	—	Inside of the smaller opening of steering rack boot NO. 1
Multemp AC-P grease or equivalent	—	• Back surface of the steering rack guide • Steering rack guide spring

Audio system / visual system

General tool

Tool name	Remarks
Circuit tester	Used for measuring resistance, voltage and current.

Battery / charging

SST

Illustration	Tool number	Name	Remarks
 STSSM4	—	Subaru Select Monitor 4	Used for various settings and diagnosing electrical system failure. NOTE: For detailed operation procedures of the Subaru Select Monitor 4, refer to "PC application help".

General tool

Tool name	Remarks
AC/DC 400 A probe	Used for measuring charging circuit.
Circuit tester	Used for measuring resistance, voltage and current.
DST-i	Used with the Subaru Select Monitor 4.

Power supply & wire harness

SST

Illustration	Tool number	Name	Remarks
 STSSM4	—	Subaru Select Monitor 4	Used for various settings and diagnosing electrical system failure. NOTE: For detailed operation procedures of the Subaru Select Monitor 4, refer to "PC application help".

General tool

Tool name	Remarks
Circuit tester	Used for measuring resistance, voltage and current.
Clip remover	Used for removing trim.
DST-i	Used with the Subaru Select Monitor 4.

Network / communication system

SST

Illustration	Tool number	Name	Remarks
 STSSM4	—	Subaru Select Monitor 4	Used for various settings and diagnosing electrical system failure. NOTE: For detailed operation procedures of the Subaru Select Monitor 4, refer to "PC application help".

General tool

Tool name	Remarks
Circuit tester	Used for measuring resistance, voltage and current.
DST-i	Used with the Subaru Select Monitor 4.

Door lock

SST

Illustration	Tool number	Name	Remarks
 STSSM4	—	Subaru Select Monitor 4	Used for various settings and diagnosing electrical system failure. NOTE: For detailed operation procedures of the Subaru Select Monitor 4, refer to "PC application help".

General tool

Tool name	Remarks
Circuit tester	Used for measuring resistance, voltage and current.
DST-i	Used with the Subaru Select Monitor 4.

Lubricant, etc.

Name	Part number	Location of use
Body grease	—	• Sliding part of front door lock ASSY (with motor) • Luggage compartment door lock cylinder ASSY

Anti-theft system / smart entry & start system

SST

Illustration	Tool number	Name	Remarks
 STSSM4	—	Subaru Select Monitor 4	Used for various settings and diagnosing electrical system failure. NOTE: For detailed operation procedures of the Subaru Select Monitor 4, refer to "PC application help".

General tool

Tool name	Remarks
Circuit tester	Used for measuring resistance, voltage and current.
DST-i	Used with the Subaru Select Monitor 4.

Lighting (interior)

SST

Illustration	Tool number	Name	Remarks
 STSSM4	—	Subaru Select Monitor 4	Used for various settings and diagnosing electrical system failure. NOTE: For detailed operation procedures of the Subaru Select Monitor 4, refer to "PC application help".

General tool

Tool name	Remarks
Circuit tester	Used for measuring resistance, voltage and current.
DST-i	Used with the Subaru Select Monitor 4.

Meter

SST

Illustration	Tool number	Name	Remarks
 STSSM4	—	Subaru Select Monitor 4	Used for various settings and diagnosing electrical system failure. NOTE: For detailed operation procedures of the Subaru Select Monitor 4, refer to "PC application help".

General tool

Tool name	Remarks
Circuit tester	Used for measuring resistance, voltage and current.
DST-i	Used with the Subaru Select Monitor 4.

SRS airbag

SST

Illustration	Tool number	Name	Remarks
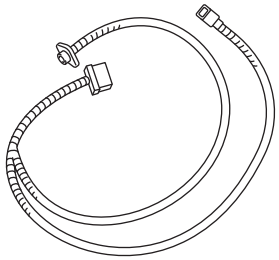 ST98299FA030	98299FA030	TEST HARNESS H	Used when measuring voltage and resistance of front sub sensor and airbag door sensor.
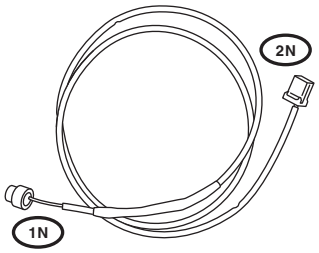 ST98299SA000	98299SA000	TEST HARNESS N	Used when measuring voltage and resistance of driver's airbag module, seat belt pretensioner, and curtain airbag module.
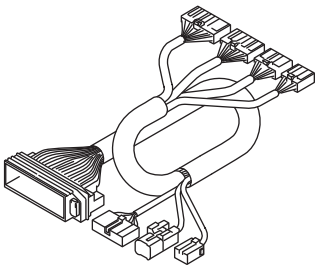 ST98299AG070	98299AG070	TEST HARNESS AG	Used when measuring voltage and resistance of air-bag control module.
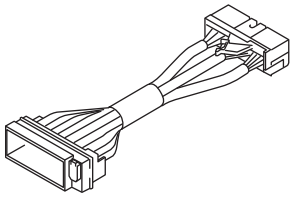 ST98299AG080	98299AG080	TEST HARNESS AH	Used together with test harness AG when measuring voltage and resistance of airbag control module.

Illustration	Tool number	Name	Remarks
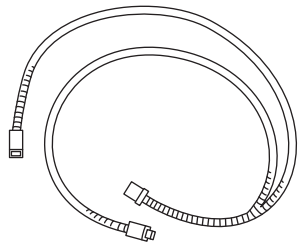 ST98299AG010	98299AG010	TEST HARNESS V	Used when measuring voltage and resistance of side airbag sensor and curtain airbag sensor.
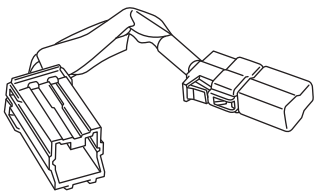 ST98299PA040	98299PA040	AIRBAG RESISTOR	Used in replacement of airbag module because the resistance is the same.
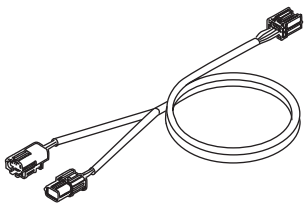 ST98299FG000	98299FG000	TEST HARNESS AJ	Used when measuring power supply and resistance of side airbag harness.
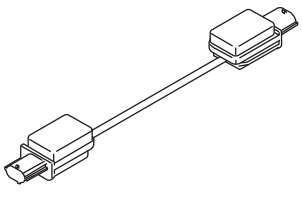 ST98299AG090	98299AG090	TEST HARNESS AI	Used when diagnosing side airbag sensor failure and curtain airbag sensor failure.

PP

Illustration	Tool number	Name	Remarks
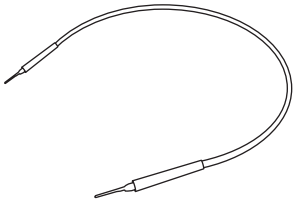 ST98299CA020	98299CA020	TEST HARNESS AT	Used when measuring power supply and resistance of side airbag harness.
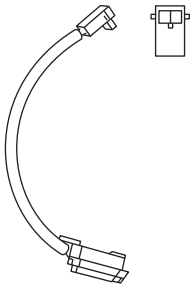 ST98299SA010	98299SA010	TEST HARNESS ADAPTER D	• Used for operation process of driver's airbag module. • Used for operation process of curtain airbag module. • Before reuse, replace the repair connector (98299FJ010). • Used for operation process of pretensioner.
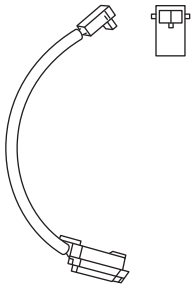 ST98299SA050	98299SA050	TEST HARNESS ADAPTER F	Used for operation process of pretensioner.
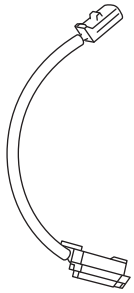 ST98299FJ000	98299FJ000	TEST HARNESS ADAPTER AM	Used for operation process of passenger's airbag module.

Illustration	Tool number	Name	Remarks
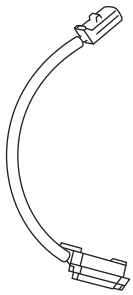 ST98299CA000	98299CA000	TEST HARNESS ADAPTER AR	Used for operation process of side airbag module.
 ST98299PA030	98299PA030	AIRBAG DEPLOYMENT TOOL	Used for operation process of airbag module and pre-tensioner.
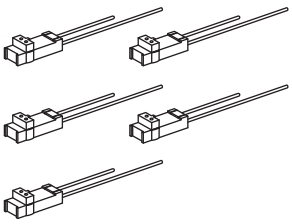 ST98299FJ010	98299FJ010	TEST HARNESS ADAPTER AN	Repair kit for replacing the melted connector of test harness adapter D.
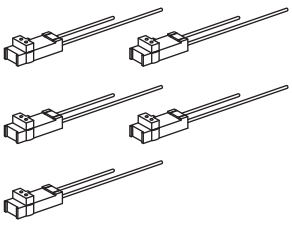 ST98299FJ020	98299FJ020	Test harness adapter AO	Repair kit for replacing the melted connector of test harness adapter F.

Illustration	Tool number	Name	Remarks
 STSSM4	—	Subaru Select Monitor 4	Used for various settings and diagnosing electrical system failure. NOTE: For detailed operation procedures of the Subaru Select Monitor 4, refer to "PC application help".

General tool

Tool name	Remarks
Circuit tester	Used for measuring resistance, voltage and current.
Probe	Used when measuring voltage and resistance of passenger's airbag module.
Wire harness with cross-sectoinal area of core (A in the figure) is 1.25 mm2 or more	Used for operation process of airbag module.
Wire with a diameter of 1.8 mm or more	Used for operation process of airbag module.
Tire with disc wheel x1	Used for operation process of airbag module.
Tire x3	Used for operation process of airbag module.
DST-i	Used with the Subaru Select Monitor 4.

Seat

General tool

Tool name	Remarks
Circuit tester	Used for measuring resistance, voltage and current.
Hog ring pliers	Used for installing seat cushion pad.

Seat belt

SST

Illustration	Tool number	Name	Remarks
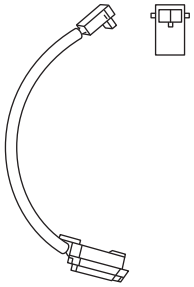 ST98299SA010	98299SA010	TEST HARNESS ADAPTER D	Used for operation process of pretensioner.
 ST98299PA030	98299PA030	Airbag deployment tool	Used for operation process of pretensioner.
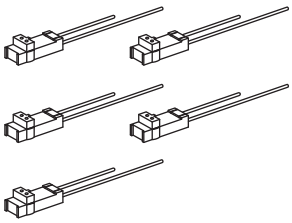 ST98299FJ010	98299FJ010	TEST HARNESS ADAPTER AN	Repair kit for replacing the melted connector of test harness adapter D.
 STSSM4	—	Subaru Select Monitor 4	Used for various settings and diagnosing electrical system failure. NOTE: For detailed operation procedures of the Subaru Select Monitor 4, refer to "PC application help".

General tool

Tool name	Remarks
Circuit tester	Used for measuring resistance, voltage and current.
Hog ring pliers	Used for installing seat cushion pad.
DST-i	Used with the Subaru Select Monitor 4.

Air conditioner

SST

Illustration	Tool number	Name	Remarks
 STSSM4	—	Subaru Select Monitor 4	Used for various settings and diagnosing electrical system failure. NOTE: For detailed operation procedures of the Subaru Select Monitor 4, refer to "PC application help".
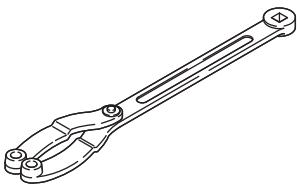 ST18355AA000	18355AA000	PULLEY WRENCH	Used for removing and installing magnet clutch ASSY.
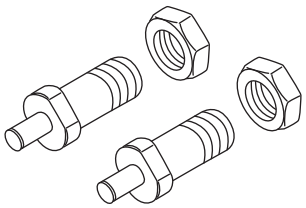 ST18334AA020	18334AA020	PULLEY WRENCH PIN SET	Used for removing and installing magnet clutch ASSY.

General tool

Tool name	Remarks
Circuit tester	Used for measuring resistance, voltage and current.
Molding remover	Used for disconnecting defroster nozzle garnish.
Wrench	When servicing A/C system, various wrenches are required. These include torque wrenches 7 - 40 N·m (0.7 - 4.1 kgf-m, 5 - 30 ft-lb) and various crowfoot wrenches. To secure a pipe joint or a hose joint, an open-end wrench or a flare-nut wrench is required.
Application bottle	Using small application bottles is recommended when applying compressor oil to various parts. These bottles can be purchased at hardware stores, etc.
Manifold gauge set (air conditioner tool set)	Manifold gauge set (with hose) can be purchased from coolant suppliers or vehicle parts suppliers.
Refrigerant recovery system	Refrigerant recovery system removes contaminants and moisture from refrigerant, and then recover and recycle the refrigerant for the A/C system.
Syringe	To replenish oil into the system, a calibrated plastic syringe is required. Syringes can be purchased at pharmacies, etc.
Vacuum pump	A vacuum pump is required to provide good working environment. It can be purchased from coolant suppliers or vehicle parts suppliers.
Can tap	A can tap can be purchased from vehicle parts suppliers.

Tool name	Remarks
Wet-and-dry-bulb thermometer	A wet-and-dry-bulb thermometer can be purchased at industrial hardware stores or from coolant suppliers.
Electronic leak detector	An electronic leak detector can be purchased from specialty tool suppliers or A/C equipment suppliers.
Measuring apparatus	When using a refrigerant receptacle of 13.6 kg (30 lb), a measuring apparatus such as an electronic measure or a scale with digital display is required.

Lubricant, etc.

Name	Part number	Location of use
Refrigerant HFC-134a (R134a)	—	Cooling system
Compressor oil (ND-OIL8)	—	Cooling system
SUBARU genuine grease	72129AJ000	Main link of air conditioner damper servo SUB-ASSY No. 3 and lever pin No. 1

Instrument panel / body interior

General tool

Tool name	Remarks
Molding remover	Used for removing instrument panel speaker panel.

Glass & window

SST

Illustration	Tool number	Name	Remarks
 STSSM4	—	Subaru Select Monitor 4	Used for various settings and diagnosing electrical system failure. NOTE: For detailed operation procedures of the Subaru Select Monitor 4, refer to "PC application help".

General tool

Tool name	Remarks
Circuit tester	Used for measuring resistance, voltage and current.
Windshield knife	Used for cutting adhesive.
Air drill	Used for drilling holes in installation surface.
Scraper	Used for scraping off adhesive or double-sided tape.
DST-i	Used with the Subaru Select Monitor 4.

Lubricant, etc.

Name	Part number	Location of use
Plastic protective plate	—	Windshield glass
3M GT7110 (double-sided tape)	—	Quarter window glass
Dow Automotive U-401, U-402 or equivalent (primer)	—	• Windshield glass • Back window glass • Quarter window glass
3M N-200, SUNSTAR #GP402 or equivalent (primer)	—	• Windshield outside molding • Back window outside molding UPR NO. 1
Dow Automotive U-413 or equivalent (primer)	—	• Body surface for installing windshield glass • Body surface for installing back window glass • Body surface for installing quarter window glass
Dow Automotive ESSEX U-400HV or equivalent (adhesive)	—	• Windshield glass • Back window glass • Quarter window glass

Door / trunk

SST

Illustration	Tool number	Name	Remarks
 STSSM4	—	Subaru Select Monitor 4	Used for various settings and diagnosing electrical system failure. NOTE: For detailed operation procedures of the Subaru Select Monitor 4, refer to "PC application help".
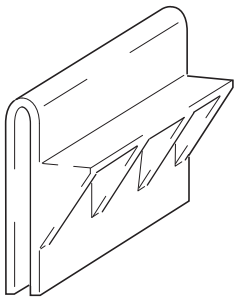 ST61299CA000	61299CA000	Special tool door	Used for adjusting door class.
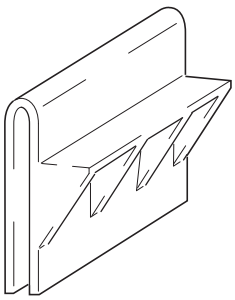 ST61299CA010	61299CA010	Special tool door	Used for adjusting door class.

General tool

Tool name	Remarks
Clip remover	• Used for removing hood insulator. • Used for removing seal ASSY front hood.
Air drill	Used for removing front door glass weather strip INN.
Circuit tester	Used for measuring resistance, voltage and current.
Torx socket wrench	Used for removing front door outside handle.
Air riveter	Used for installing front door glass weather strip INN.
DST-i	Used with the Subaru Select Monitor 4.

Lubricant, etc.

Name	Part number	Location of use
Body grease	—	Sliding sections of the following parts: front door window regulator, front door check ASSY RH, front door outside handle frame SUB-ASSY RH, and front door lock ASSY RH

Outer mirror

General tool

Tool name	Remarks
Circuit tester	Used for measuring resistance, voltage and current.
Molding remover	Used for removing outer mirror.

Wipers & washers

General tool

Tool name	Remarks
Circuit tester	Used for measuring resistance, voltage and current.

Lubricant, etc.

Name	Part number	Location of use
Plastic brush	—	Washer nozzle
Multemp SA grease or equivalent	—	Crank arm pivot of front wiper crank SUB-ASSY
Wire brush	—	Wiper pivot serration section
Receptacle	—	Draining washer fluid

Lighting (exterior)

SST

Illustration	Tool number	Name	Remarks
 STSSM4	—	Subaru Select Monitor 4	Used for various settings and diagnosing electrical system failure. NOTE: For detailed operation procedures of the Subaru Select Monitor 4, refer to "PC application help".

General tool

Tool name	Remarks
Circuit tester	Used for measuring resistance, voltage and current.
DST-i	Used with the Subaru Select Monitor 4.

Horn

General tool

Tool name	Remarks
Circuit tester	Used for measuring resistance, voltage and current.

Body exterior

General tool

Tool name	Remarks
Clip remover	Used for removing clip.
Winch	Used for removing ornament emblem.
Molding remover	Used for removing front fender garnish (front fender molding).

Lubricant, etc.

Name	Part number	Location of use
Appropriate detergent	—	Used for cleaning adhesive surface.
Heat light	—	• Front ornament emblem • Rear ornament emblem • Front fender garnish (front fender molding)
Piano wire	—	Used for cutting adhesive part of double-sided tape.
Acrylic foam tape	—	• Front ornament emblem • Rear ornament emblem • Front fender garnish (front fender molding)
Primer (3M DP-100)	—	Roof drip side finish molding clip
Adhesive 1324 or equivalent	V93500114	Rear bolt mounting bolt (except for tS model)

Engine control

EFI system (FA20)

Precautions ES-7
Basic inspection ES-7
Parts location ES-8
DTC table ES-12
Symptom table ES-16
How to troubleshoot ES-19
Monitor status check ES-24
Check list for interview ES-26
Checking / clearing DTC ES-28
Freeze frame data ES-28
Inspection for problems that do not normally occur ES-28
Circuit figure ES-29
ECM terminal arrangement ES-36
Data monitor / active test ES-43
VVT initial position learning value display ES-82
Failsafe list ES-83
P000A ES-85
P000C ES-85
P0011 . . . . . ES-85
P0021 . . . . . ES-85
P000B ES-98
P000D ES-98
P0014 . . . . . ES-98
P0024 . . . . . ES-98
P0010 . . . . . ES-112
P0020 . . . . . ES-112
P0013 . . . . . ES-116
P0023 . . . . . ES-116
P0016 . . . . . ES-120
P0017 . . . . . ES-120
P0018 . . . . . ES-120
P0019 . . . . . ES-120
P0030 . . . . . ES-131
P0031 . . . . . ES-131
P0032 . . . . . ES-131
P0037 . . . . . ES-138
P0038 . . . . . ES-138
P0141 . . . . . ES-138
P0068 . . . . . ES-145
P0071 . . . . . ES-148
P0072 . . . . . ES-150
P0073 . . . . . ES-151
P0087 . . . . . ES-152
P0088 . . . . . ES-160
P0101 . . . . . ES-163
P0102 . . . . . ES-167
P0103 . . . . . ES-167
P0107 . . . . . ES-173

P0108 . . . . . ES-173
P0111 . . . . . ES-177
P0112 . . . . . ES-181
P0113 . . . . . ES-181
P0116 . . . . . ES-185
P0117 . . . . . ES-188
P0118 . . . . . ES-188
P0122 . . . . . ES-192
P0123 . . . . . ES-192
P0222 . . . . . ES-192
P0223 . . . . . ES-192
P2135 . . . . . ES-192
P0125 . . . . . ES-198
P0128 . . . . . ES-201
P0131 . . . . . ES-205
P0132 . . . . . ES-205
P0134 . . . . . ES-205
P0137 . . . . . ES-209
P0138 . . . . . ES-212
P013A ES-216
P013B ES-216
P013E ES-216
P013F ES-216
P014C ES-225
P014D ES-225
P015A ES-225
P015B ES-225
P0171 . . . . . ES-233
P0172 . . . . . ES-233
P1170 . . . . . ES-233
P117B ES-233
P0191 . . . . . ES-255
P0192 . . . . . ES-257
P0193 . . . . . ES-259
P1192 . . . . . ES-263
P1193 . . . . . ES-266
P0196 . . . . . ES-270
P0197 . . . . . ES-273
P0198 . . . . . ES-273
P0201 . . . . . ES-277
P0202 . . . . . ES-277
P0203 . . . . . ES-277
P0204 . . . . . ES-277
P0230 . . . . . ES-282
P0300 . . . . . ES-287
P0301 . . . . . ES-287
P0302 . . . . . ES-287
P0303 . . . . . ES-287
P0304 . . . . . ES-287
P0327 . . . . . ES-301
P0328 . . . . . ES-301
P0332 . . . . . ES-301
P0333 . . . . . ES-301
P0335 . . . . . ES-306
P0336 . . . . . ES-306

P0340 . . . . . ES-311
P0341 . . . . . ES-311
P0345 . . . . . ES-311
P0346 . . . . . ES-311
P0351 . . . . . ES-317
P0352 . . . . . ES-317
P0353 . . . . . ES-317
P0354 . . . . . ES-317
P0365 . . . . . ES-323
P0366 . . . . . ES-323
P0390 . . . . . ES-323
P0391 . . . . . ES-323
P0420 . . . . . ES-329
P0441 . . . . . ES-337
P0451 . . . . . ES-343
P0452 . . . . . ES-343
P0453 . . . . . ES-343
P0455 . . . . . ES-351
P0456 . . . . . ES-351
P1451 . . . . . ES-351
P2404 . . . . . ES-351
P0458 . . . . . ES-365
P0459 . . . . . ES-365
P2158 . . . . . ES-370
P0506 . . . . . ES-374
P0507 . . . . . ES-374
P050A ES-378
P050B ES-378
P0512 . . . . . ES-384
P0616 . . . . . ES-384
P0617 . . . . . ES-384
P081A ES-384
P0560 . . . . . ES-390
P0604 . . . . . ES-393
P0605 . . . . . ES-393
P0606 . . . . . ES-393
P060A ES-393
P060B ES-393
P062F ES-393
P062D ES-397
P1261 . . . . . ES-397
P1262 . . . . . ES-397
P1263 . . . . . ES-397
P1264 . . . . . ES-397
P0685 . . . . . ES-405
P0700 . . . . . ES-406
P0851 . . . . . ES-409
P0852 . . . . . ES-409
P1109 . . . . . ES-415
P2109 . . . . . ES-415
P1160 . . . . . ES-417
P2119 . . . . . ES-417
P119E ES-422
P119F ES-422
P219A ES-422

P1235 . . . . . ES-429
P1449 . . . . . ES-435
P1603 . . . . . ES-438
P1604 . . . . . ES-481
P2096 . . . . . ES-538
P2097 . . . . . ES-538
P2101 . . . . . ES-552
P2102 . . . . . ES-552
P2103 . . . . . ES-552
P2122 . . . . . ES-559
P2123 . . . . . ES-559
P2127 . . . . . ES-559
P2128 . . . . . ES-559
P2138 . . . . . ES-559
P2195 . . . . . ES-564
P2196 . . . . . ES-564
P2270 . . . . . ES-573
P2271 . . . . . ES-577
P2401 . . . . . ES-581
P2402 . . . . . ES-581
P2419 . . . . . ES-581
P2420 . . . . . ES-581
P2530 . . . . . ES-587
P2610 . . . . . ES-589
U0073 . . . . . ES-592
U0101 . . . . . ES-592
U0122 . . . . . ES-592
U0155 . . . . . ES-592
U0402 . . . . . ES-592
U0416 . . . . . ES-592
U0423 . . . . . ES-592
EVAP system. ES-595
Fuel pump control system ES-602
Starter system (models with smart entry & start system) ES-610
Starter system (models without smart entry & start system) ES-620
Brake override system. ES-629
MIL circuit ES-631
Fuel injector circuit. ES-633
VC power supply circuit ES-636
ECM power supply system ES-642

Ignition system (FA20)

Parts location. ES-650
Circuit figure ES-652
On-vehicle inspection ES-652

Cam timing oil control valve ASSY (FA20)

Exploded view ES-659
Removal ES-660
Installation ES-662
Unit inspection ES-663

Throttle body ASSY (FA20)

Exploded view ES-664
Removal ES-666
Installation ES-667

On-vehicle inspection. ES-667
Unit inspection ES-668

Engine control computer (FA20)
Exploded view ES-669
Removal. ES-670
Installation ES-671

Accelerator pedal rod ASSY (FA20)
Exploded view ES-673
Removal. ES-673
Installation ES-673
On-vehicle inspection. ES-674

Intake air flow meter S/A (FA20)
Exploded view ES-675
Removal. ES-675
Installation ES-675
On-vehicle inspection. ES-676
Unit inspection ES-676

Camshaft position sensor (FA20)
Exploded view ES-677
Removal. ES-678
Installation ES-679

Crankshaft position sensor (FA20)
Exploded view ES-681
Removal. ES-681
Installation ES-682

Ignition coil and spark plug (FA20)
Exploded view ES-683
Removal. ES-687
Installation ES-692

Engine coolant temperature sensor (FA20)
Exploded view ES-695
Removal. ES-695
Installation ES-696
Unit inspection ES-696

Engine oil temperature sensor (FA20)
Exploded view ES-698
Removal. ES-698
Installation ES-699
Unit inspection ES-699

Knock control sensor (FA20)
Exploded view ES-700
Removal. ES-700
Installation ES-701
Unit inspection ES-702

Vacuum sensor ASSY (FA20)
Exploded view ES-703
Removal. ES-704
Installation ES-706
On-vehicle inspection. ES-706

Air / fuel ratio sensor (FA20)
Exploded view ES-707
Removal ES-707
Installation ES-708
Unit inspection ES-708

Oxygen sensor (FA20)
Exploded view ES-709
Removal ES-710
Installation ES-712
Unit inspection ES-712

Relay
Unit inspection ES-713

EFI system (FA20)

Precautions

1. Precautions

   WARNING:

   Observe the following items for the safe usage of SSM4.

   - Before using the SSM4, read the operation manual.
   - When running the vehicle with the SSM4 connected to the DLC3, be careful not to let the cable contact the pedal, shift lever or steering wheel.
   - When running the vehicle with the SSM4 connected to the DLC3, always work in a team of two to avoid driving while operating tools and obey traffic regulations.

   CAUTION:

   - When replacing the engine control computer, perform registration of the identification code. (For registration procedure, refer to "REGISTRATION MANUAL FOR IMMOBILIZER.")
   - After turning the ignition switch to OFF, you may have to wait for a while before disconnecting the battery terminals. Check appropriate precautions for battery terminal disconnection before proceeding. (Refer to IN - 6)

Basic inspection

CAUTION:

When it is impossible to locate the defective part after troubleshooting, perform the following basic inspection to determine the problem.

1. Battery check
   (1) Check the battery condition. (Refer to BH - 3)
2. Cranking operation inspection
   (1) Check that the engine is cranked.
   NOTE:
   If not, refer to symptom table. (Refer to ES - 16)
3. Engine starting inspection
   (1) Check that the engine starts.
   NOTE:
   If not, refer to symptom table. (Refer to ES - 16)
4. Air filter inspection
   (1) Check the air filter.
   NOTE:
   When the air filter is dirty, clean or replace it.
5. Idle speed check
   (1) Check the idle speed. (Refer to EM - 2)
6. Ignition timing inspection
   (1) Check the ignition timing. (Refer to EM - 2)
7. Fuel pressure check
   (1) Check the fuel pressure. (Refer to FU - 9)
8. Spark Inspection
   (1) Check the spark. (Refer to ES - 653)
9. Compression inspection
   (1) Check the compression. (Refer to EM - 2)

Parts location

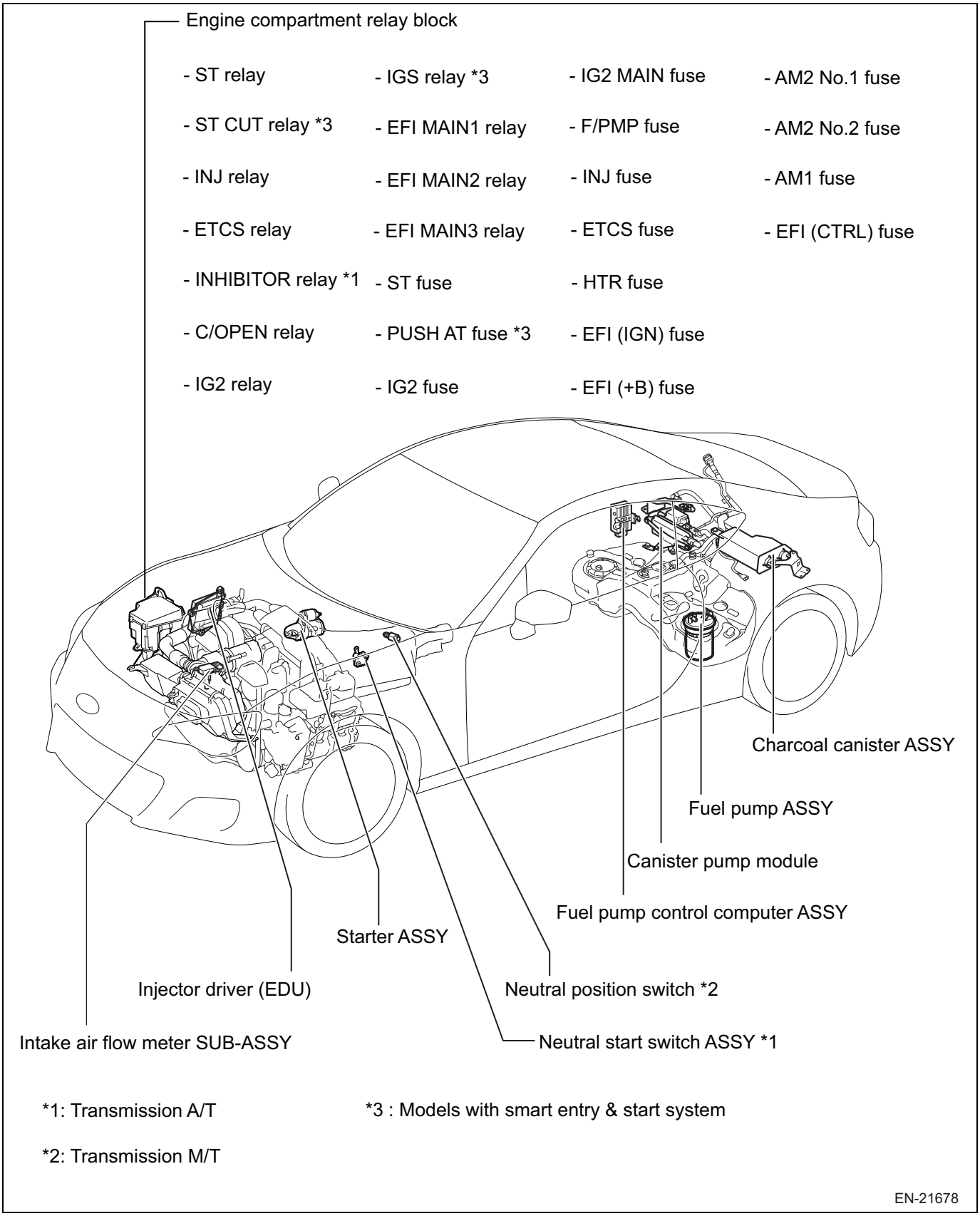

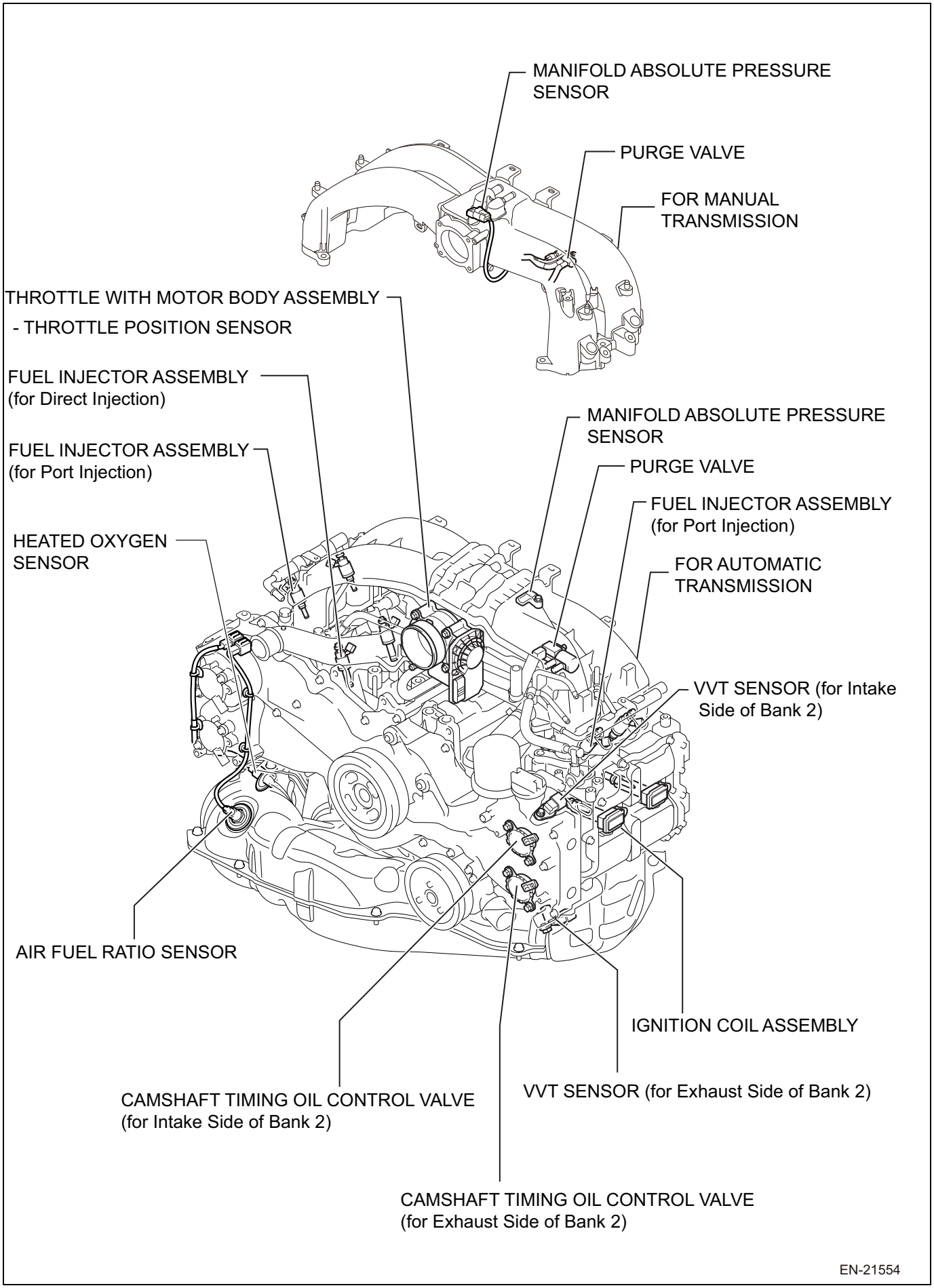
MANIFOLD ABSOLUTE PRESSURE SENSOR
PURGE VALVE
FOR MANUAL TRANSMISSION
THROTTLE WITH MOTOR BODY ASSEMBLY
- THROTTLE POSITION SENSOR
FUEL INJECTOR ASSEMBLY (for Direct Injection)
FUEL INJECTOR ASSEMBLY (for Port Injection)
HEATED OXYGEN SENSOR
MANIFOLD ABSOLUTE PRESSURE SENSOR
PURGE VALVE
FUEL INJECTOR ASSEMBLY (for Port Injection)
FOR AUTOMATIC TRANSMISSION
VVT SENSOR (for Intake Side of Bank 2)
AIR FUEL RATIO SENSOR
IGNITION COIL ASSEMBLY
CAMSHAFT TIMING OIL CONTROL VALVE (for Intake Side of Bank 2)
VVT SENSOR (for Exhaust Side of Bank 2)
CAMSHAFT TIMING OIL CONTROL VALVE (for Exhaust Side of Bank 2)
EN-21554

ES

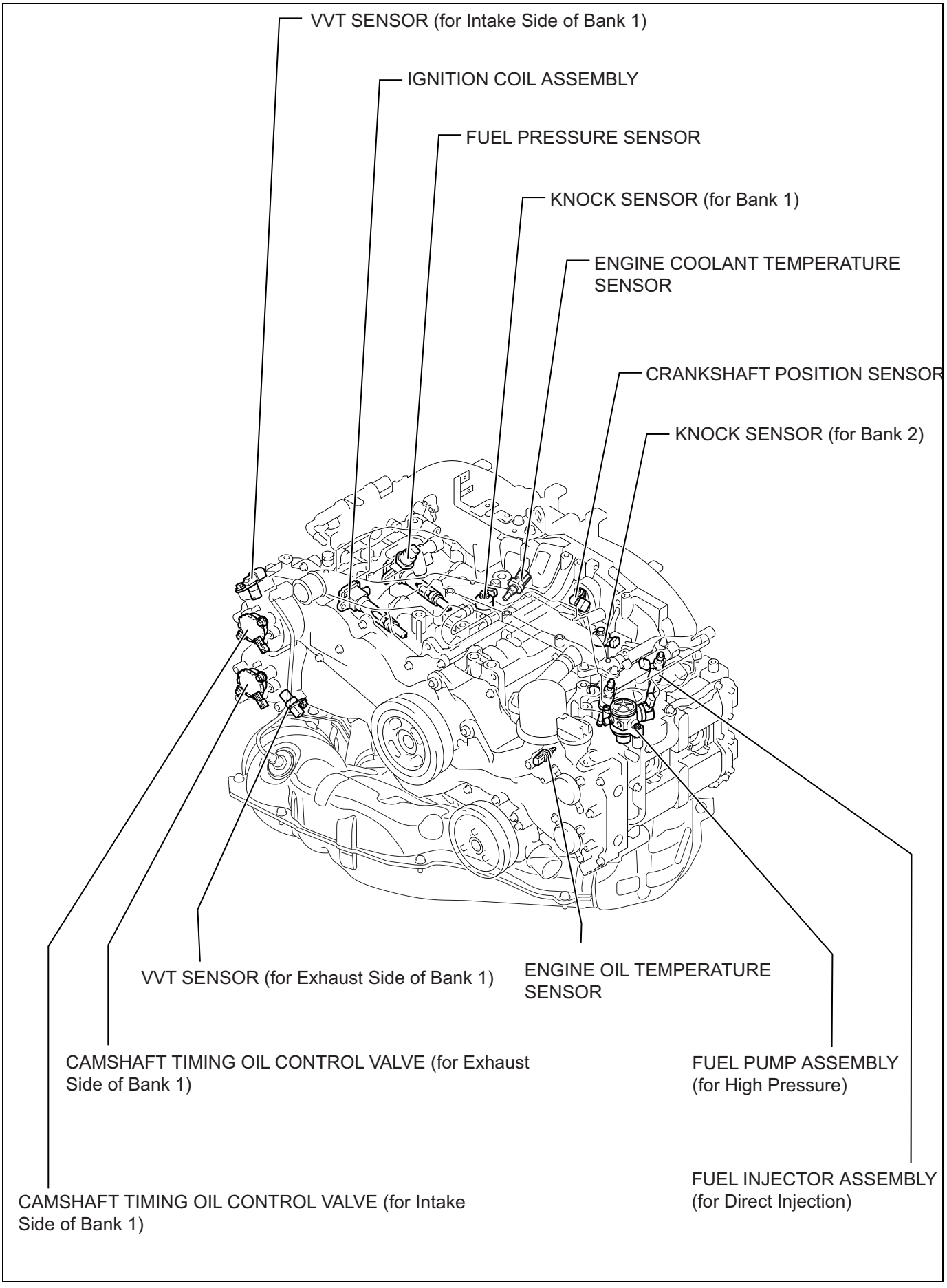
VVT SENSOR (for Intake Side of Bank 1)
IGNITION COIL ASSEMBLY
FUEL PRESSURE SENSOR
KNOCK SENSOR (for Bank 1)
ENGINE COOLANT TEMPERATURE SENSOR
CRANKSHAFT POSITION SENSOR
KNOCK SENSOR (for Bank 2)
VVT SENSOR (for Exhaust Side of Bank 1)
ENGINE OIL TEMPERATURE SENSOR
CAMSHAFT TIMING OIL CONTROL VALVE (for Exhaust Side of Bank 1)
FUEL PUMP ASSEMBLY (for High Pressure)
FUEL INJECTOR ASSEMBLY (for Direct Injection)
CAMSHAFT TIMING OIL CONTROL VALVE (for Intake Side of Bank 1)

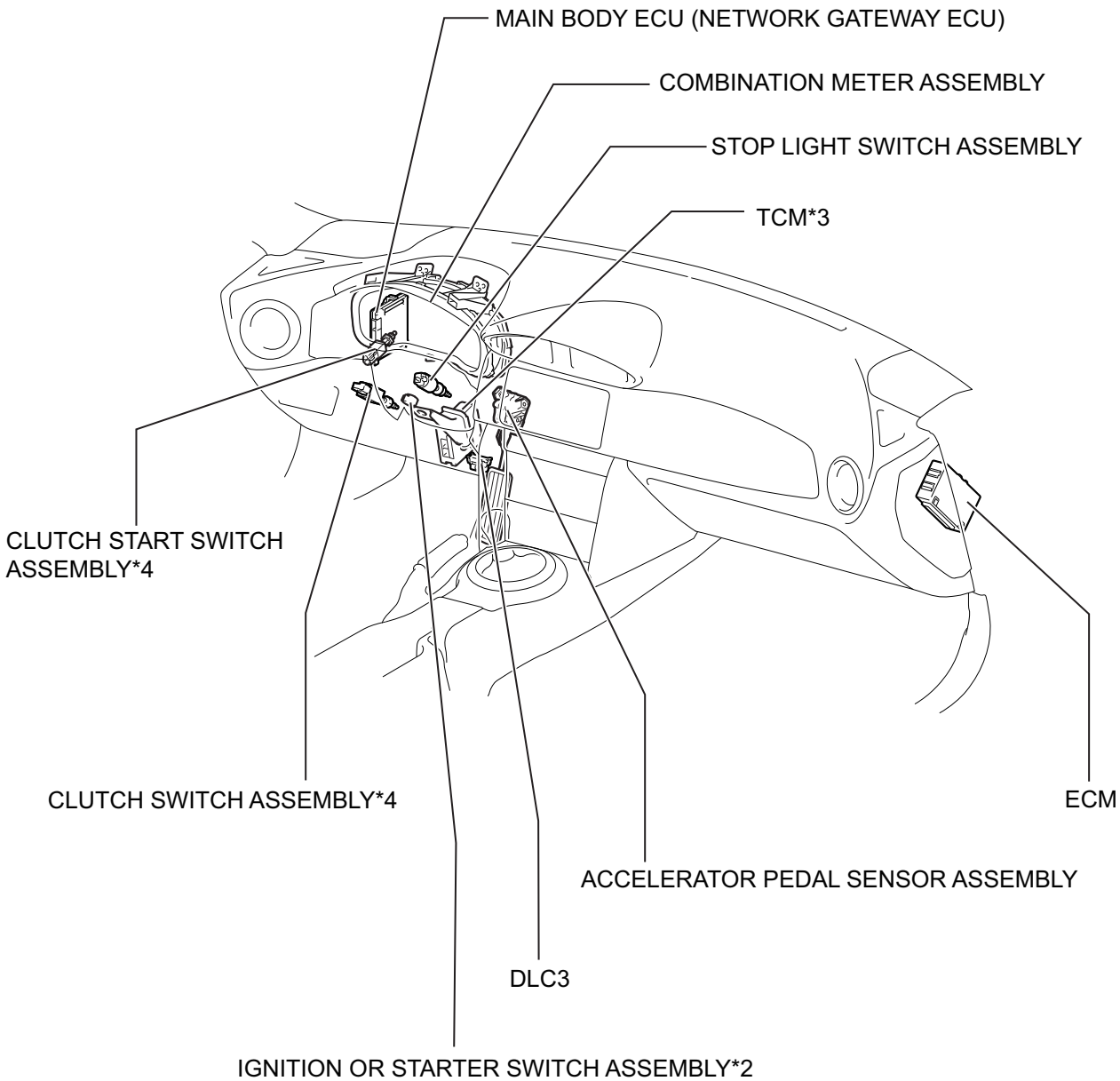

ID CODE BOX (IMMOBILISER CODE ECU)*5

CERTIFICATION ECU (SMART KEY ECU ASSEMBLY)

REFER TO THE “REGISTRATION MANUAL FOR IMMOBILIZER” FOR ATTACHMENT POSITION.

*1: w/ Entry and Start System

*2: w/o Entry and Start System

*3: for Automatic Transmission

*4: for Manual Transmission

*5: w/ ID Code Box

EN-10081

DTC table

DTC	Diagnostic items	Light on	Code recording	Reference pages
P000A	[A Camshaft Position Slow Response (Bank 1)]	0	0	ES - 85
P000B	[B Camshaft Position Slow Response (Bank 1)]	0	0	ES - 98
P000C	[A Camshaft Position Slow Response (Bank 2)]	0	0	ES - 85
P000D	[B Camshaft Position Slow Response (Bank 2)]	0	0	ES - 98
P0010	[A Camshaft Position Actuator Circuit/Open (Bank 1)]	0	0	ES - 112
P0011	[Camshaft Position "A" - Timing Over-Advanced or System Performance (Bank 1)]	0	0	ES - 85
P0013	[B Camshaft Position - Actuator Circuit/Open (Bank 1)]	0	0	ES - 116
P0014	[Camshaft Position "B" - Timing Over-Advanced or System Performance (Bank 1)]	0	0	ES - 98
P0016	[Crankshaft Position - Camshaft Position Correlation (Bank 1 Sensor A)]	0	0	ES - 120
P0017	[Crankshaft Position - Camshaft Position Correlation (Bank 1 Sensor B)]	0	0	ES - 120
P0018	[Crankshaft Position - Camshaft Position Correlation (Bank 2 Sensor A)]	0	0	ES - 120
P0019	[Crankshaft Position - Camshaft Position Correlation (Bank 2 Sensor B)]	0	0	ES - 120
P0020	[A Camshaft Position Actuator Circuit/Open (Bank 2)]	0	0	ES - 112
P0021	[Camshaft Position "A" - Timing Over-Advanced or System Performance (Bank 2)]	0	0	ES - 85
P0023	[B Camshaft Position - Actuator Circuit/Open (Bank 2)]	0	0	ES - 116
P0024	[Camshaft Position "B" - Timing Over-Advanced or System Performance (Bank 2)]	0	0	ES - 98
P0030	[Oxygen Sensor Heater Control Circuit (Bank 1 Sensor 1)]	0	0	ES - 131
P0031	[Oxygen (A/F) Sensor Heater Control Circuit Low (Bank 1 Sensor 1)]	0	0	ES - 131
P0032	[Oxygen (A/F) Sensor Heater Control Circuit High (Bank 1 Sensor 1)]	0	0	ES - 138
P0037	[Oxygen Sensor Heater Control Circuit Low (Bank 1 Sensor 2)]	0	0	ES - 138
P0038	[Oxygen Sensor Heater Control Circuit High (Bank 1 Sensor 2)]	0	0	ES - 138
P0068	[Manifold Pressure Sensor Range/Performance]	0	0	ES - 145
P0071	[Ambient Air Temperature Sensor Circuit "A" Range/Performance]	0	0	ES - 148
P0072	[Ambient Air Temperature Sensor Circuit "A" Low]	0	0	ES - 150
P0073	[Ambient Air Temperature Sensor Circuit "A" High]	0	0	ES - 151
P0087	[Fuel Rail/System Pressure - Too Low]	0	0	ES - 152
P0088	[Fuel Rail/System Pressure - Too High]	0	0	ES - 160
P0101	[Mass Air Flow Circuit Range/Performance Problem]	0	0	ES - 163
P0102	[Mass Air Flow Circuit Low]	0	0	ES - 167
P0103	[Mass Air Flow Circuit High]	0	0	ES - 167
P0107	[Manifold Absolute Pressure/Barometric Pressure Circuit Low Input]	0	0	ES - 173
P0108	[Manifold Absolute Pressure/Barometric Pressure Circuit High Input]	0	0	ES - 173
P0111	[Intake Air Temperature Circuit Range/Performance]	0	0	ES - 177
P0112	[Intake Air Temperature Circuit Low Input]	0	0	ES - 181
P0113	[Intake Air Temperature Circuit High Input]	0	0	ES - 181
P0116	[Engine Coolant Temperature Sensor 1 Circuit Range/Performance]	0	0	ES - 185
P0117	[Engine Coolant Temperature Circuit Low Input]	0	0	ES - 188
P0118	[Engine Coolant Temperature Circuit High Input]	0	0	ES - 188

DTC	Diagnostic items	Light on	Code recording	Reference pages
P0122	[Throttle/Pedal Position Sensor/Switch "A" Circuit Low Input]	0	0	ES - 192
P0123	[Throttle/Pedal Position Sensor/Switch "A" Circuit High Input]	0	0	ES - 192
P0125	[Insufficient Coolant Temperature for Closed Loop Fuel Control]	0	0	ES - 198
P0128	[Coolant Thermostat (Coolant Temperature Below Thermostat Regulating Temperature)]	0	0	ES - 201
P0131	[Oxygen Sensor Circuit Low Voltage (Bank 1 Sensor 1)]	0	0	ES - 205
P0132	[Oxygen Sensor Circuit High Voltage (Bank 1 Sensor 1)]	0	0	ES - 205
P0134	[Oxygen Sensor Circuit No Activity Detected (Bank 1 Sensor 1)]	0	0	ES - 205
P0137	[Oxygen Sensor Circuit Low Voltage (Bank 1 Sensor 2)]	0	0	ES - 216
P0138	[Oxygen Sensor Circuit High Voltage (Bank 1 Sensor 2)]	0	0	ES - 216
P013A	[O2 Sensor Slow Response - Rich to Lean (Bank 1 Sensor 2)]	0	0	ES - 216
P013B	[O2 Sensor Slow Response - Lean to Rich (Bank 1 Sensor 2)]	0	0	ES - 216
P013E	[O2 Sensor Delayed Response - Rich to Lean (Bank 1 Sensor 2)]	0	0	ES - 216
P013F	[O2 Sensor Delayed Response - Lean to Rich (Bank 1 Sensor 2)]	0	0	ES - 216
P0141	[Oxygen Sensor Heater Circuit (Bank 1 Sensor 2)]	0	0	ES - 138
P014C	[O2 Sensor Slow Response - Rich to Lean (Bank 1 Sensor 1)]	0	0	ES - 225
P014D	[O2 Sensor Slow Response - Lean to Rich (Bank 1 Sensor 1)]	0	0	ES - 225
P015A	[O2 Sensor Delayed Response - Rich to Lean (Bank 1 Sensor 1)]	0	0	ES - 225
P015B	[O2 Sensor Delayed Response - Lean to Rich (Bank 1 Sensor 1)]	0	0	ES - 225
P0171	[System too Lean (Bank 1)]	0	0	ES - 233
P0172	[System too Rich (Bank 1)]	0	0	ES - 233
P0191	[Fuel Rail Pressure Sensor "A" Circuit Range/Performance]	0	0	ES - 255
P0192	[Fuel Rail Pressure Sensor Circuit Low Input]	0	0	ES - 255
P0193	[Fuel Rail Pressure Sensor Circuit High Input]	0	0	ES - 255
P0196	[Engine Oil Temperature Sensor Range/Performance]	0	0	ES - 270
P0197	[Engine Oil Temperature Sensor Low]	0	0	ES - 273
P0198	[Engine Oil Temperature Sensor High]	0	0	ES - 273
P0201	[Injector Circuit / Open - (Cylinder 1)]	0	0	ES - 255
P0202	[Injector Circuit / Open - (Cylinder 2)]	0	0	ES - 277
P0203	[Injector Circuit / Open - (Cylinder 3)]	0	0	ES - 277
P0204	[Injector Circuit / Open - (Cylinder 4)]	0	0	ES - 277
P0222	[Throttle/Pedal Position Sensor/Switch "B" Circuit Low Input]	0	0	ES - 192
P0223	[Throttle/Pedal Position Sensor/Switch "B" Circuit High Input]	0	0	ES - 192
P0230	[Fuel Pump Primary Circuit]	0	0	ES - 282
P0300	[Random/Multiple Cylinder Misfire Detected]	On/blink	0	ES - 287
P0301	[Cylinder 1 Misfire Detected]	On/blink	0	ES - 287
P0302	[Cylinder 2 Misfire Detected]	On/blink	0	ES - 287
P0303	[Cylinder 3 Misfire Detected]	On/blink	0	ES - 287
P0304	[Cylinder 4 Misfire Detected]	On/blink	0	ES - 287
P0327	[Knock Sensor 1 Circuit Low Input (Bank 1 or Single Sensor)]	0	0	ES - 301

ES

DTC	Diagnostic items	Light on	Code recording	Reference pages
P0328	[Knock Sensor 1 Circuit High Input (Bank 1 or Single Sensor)]	0	0	ES - 301
P0332	[Knock Sensor 2 Circuit Low (Bank 2)]	0	0	ES - 301
P0333	[Knock Sensor 2 Circuit High (Bank 2)]	0	0	ES - 301
P0335	[Crankshaft Position Sensor "A" Circuit]	0	0	ES - 306
P0336	[Crankshaft Position Sensor "A" Circuit Range/Performance]	0	0	ES - 306
P0340	[Camshaft Position Sensor "A" Circuit (Bank 1 or Single Sensor)]	0	0	ES - 311
P0341	[Camshaft Position Sensor "A" Circuit Range/Performance (Bank 1 or Single Sensor)]	0	0	ES - 311
P0345	[Camshaft Position Sensor "A" Circuit (Bank 2)]	0	0	ES - 311
P0346	[Camshaft Position Sensor "A" Circuit Range/Performance (Bank 2)]	0	0	ES - 311
P0351	[Ignition Coil "A" Primary/Secondary Circuit]	0	0	ES - 317
P0352	[Ignition Coil "B" Primary/Secondary Circuit]	0	0	ES - 317
P0353	[Ignition Coil "C" Primary/Secondary Circuit]	0	0	ES - 317
P0354	[Ignition Coil "D" Primary/Secondary Circuit]	0	0	ES - 317
P0365	[Camshaft Position Sensor "B" Circuit (Bank 1)]	0	0	ES - 323
P0366	[Camshaft Position Sensor "B" Circuit Range/Performance (Bank 1)]	0	0	ES - 323
P0390	[Camshaft Position Sensor "B" Circuit (Bank 2)]	0	0	ES - 323
P0391	[Camshaft Position Sensor "B" Circuit Range/Performance (Bank 2)]	0	0	ES - 323
P0420	[Catalyst System Efficiency Below Threshold (Bank 1)]	0	0	ES - 329
P0441	[Purge Flow]	0	0	ES - 337
P0451	[Evaporative Emission Control System Pressure Sensor/Switch Range/Performance]	0	0	ES - 343
P0452	[Evaporative Emission Control System Pressure Sensor/Switch Low Input]	0	0	ES - 343
P0453	[Evaporative Emission Control System Pressure Sensor/Switch High Input]	0	0	ES - 343
P0455	[Evaporative Emission Control System Leak Detected (gross leak)]	0	0	ES - 351
P0456	[Evaporative Emission Control System Leak Detected (very small leak)]	0	0	ES - 351
P0458	[Evaporative Emission System Purge Control Valve Circuit Low]	0	0	ES - 365
P0459	[Evaporative Emission System Purge Control Valve Circuit High]	0	0	ES - 365
P0506	[Idle Air Control System RPM Lower Than Expected]	0	0	ES - 374
P0507	[Idle Air Control System RPM Higher Than Expected]	0	0	ES - 374
P050A	[Cold Start Idle Air Control System Performance]	0	0	ES - 378
P050B	[Cold Start Ignition Timing Performance]	0	0	ES - 378
P0512	[Starter Switch Circuit High input]	0	0	ES - 384
P0560	[Back-up Voltage Circuit Malfunction]	0	0	ES - 390
P0604	[Internal Control Module Random Access Memory (RAM) Error]	0	0	ES - 393
P0605	[Internal Control Module Read Only Memory (ROM) Error]	0	0	ES - 393
P0606	[Control Module Processor]	0	0	ES - 393
P060A	[Internal Control Module Monitoring Processor Performance]	0	0	ES - 393
P060B	[Internal Control Module A/D Processing Performance]	0	0	ES - 393
P0616	[Starter Relay Circuit Low]	0	0	ES - 384
P0617	[Starter Relay Circuit High]	0	0	ES - 384
P062D	[Fuel Injector Driver Circuit Performance (Bank 1)]	0	0	ES - 397

DTC	Diagnostic items	Light on	Code recording	Reference pages
P062F	[Failure EEPROM]	0	0	ES - 393
P0685	[Main Relay ON Stuck]	0	0	ES - 405
P0700	[Transmission Control System (MIL Request)]	0	0	ES - 406
P081A	[Starter cut relay system circuit (Low)]	0	0	ES - 384
P0851	[Neutral switch circuit Low (MT model)]	0	0	ES - 409
P0852	[Neutral switch circuit High (MT model)]	0	0	ES - 409
P1109	[Detected Throttle Deposit]	×	0	ES - 415
P1160	[Return Spring Failure]	0	0	ES - 417
P1170	[Fuel System Abnormal (Port)]	×	0	ES - 233
P117B	[Fuel System Abnormal (Di)]	×	0	ES - 233
P1192	[Fuel Rail Pressure Sensor "B" Circuit Low]	0	0	ES - 263
P1193	[Fuel Rail Pressure Sensor "B" Circuit High]	0	0	ES - 266
P119E	[Air-Fuel Ratio Imbalance for Port Injection (Bank1 fluctuation engine speed)]	0	0	ES - 422
P119F	[Air-Fuel Ratio Imbalance for Direct Injection (Bank1 fluctuation engine speed)]	0	0	ES - 422
P1235	[High Pressure Fuel Pump Circuit]	0	0	ES - 429
P1261	[DI Injector Circuit / Open - (Cylinder 1)]	0	0	ES - 397
P1262	[DI Injector Circuit / Open - (Cylinder 2)]	0	0	ES - 397
P1263	[DI Injector Circuit / Open - (Cylinder 3)]	0	0	ES - 397
P1264	[DI Injector Circuit / Open - (Cylinder 4)]	0	0	ES - 397
P1449	[Vent control filter clogging]	0	0	ES - 435
P1451	[Fuel Tank Pressure Sensor Range/Performance]	0	0	ES - 351
P1603	[Engine Stall History]	×	0	ES - 438
P1604	[Startability Malfunction]	×	0	ES - 481
P2096	[Post Catalyst Fuel Trim System Too Lean (Bank 1)]	0	0	ES - 538
P2097	[Post Catalyst Fuel Trim System Too Rich (Bank 1)]	0	0	ES - 538
P2101	[Throttle Actuator Control Motor Circuit Range/Performance]	0	0	ES - 552
P2102	[Throttle Actuator Control Motor Circuit Low]	0	0	ES - 552
P2103	[Throttle Actuator Control Motor Circuit High]	0	0	ES - 552
P2109	[Throttle/Pedal Position Sensor "A" Minimum Stop Performance]	0	0	ES - 415
P2119	[Throttle Actuator Control Throttle Body Range/Performance]	0	0	ES - 417
P2122	[Throttle/Pedal Position Sensor/Switch "D" Circuit Low Input]	0	0	ES - 559
P2123	[Throttle/Pedal Position Sensor/Switch "D" Circuit High Input]	0	0	ES - 559
P2127	[Throttle/Pedal Position Sensor/Switch "E" Circuit Low Input]	0	0	ES - 559
P2128	[Throttle/Pedal Position Sensor/Switch "E" Circuit High Input]	0	0	ES - 559
P2135	[Throttle/Pedal Position Sensor/Switch "A" / "B" Voltage Correlation]	0	0	ES - 192
P2138	[Throttle/Pedal Position Sensor/Switch "D" / "E" Voltage Correlation]	0	0	ES - 559
P2158	[Vehicle Speed Sensor "A"]	0	0	ES - 370
P2195	[O2 Sensor Signal Biased/Stuck Lean (Bank 1 Sensor 1)]	0	0	ES - 564
P2196	[O2 Sensor Signal Biased/Stuck Rich (Bank 1 Sensor 1)]	0	0	ES - 564
P219A	[Air-Fuel Ratio Imbalance (Bank 1)]	0	0	ES - 422
P2270	[O2 Sensor Circuit Range/Performance Lean (Bank1 Sensor2)]	0	0	ES - 573
P2271	[O2 Sensor Circuit Range/Performance Rich (Bank1 Sensor2)]	0	0	ES - 577

DTC	Diagnostic items	Light on	Code recording	Reference pages
P2401	[Evaporative Emission Leak Detection Pump Stuck OFF]	0	0	ES - 581
P2402	[Evaporative Emission Leak Detection Pump Stuck ON]	0	0	ES - 581
P2404	[Evaporative Emission System Leak Detection Pump Sense Circuit Range/Performance]	0	0	ES - 351
P2419	[Evaporate Emission System Switching Valve Control Circuit Low]	0	0	ES - 581
P2420	[Evaporate Emission System Switching Valve Control Circuit High]	0	0	ES - 581
P2530	[Ignition Switch Run Position Circuit]	0	0	ES - 587
P2610	[ECM/PCM Internal Engine Off Timer Performance]	0	0	ES - 589
U0073	[Control Module Communication Bus "A" Off]	0	0	ES - 592
U0101	[Lost Communication With TCM]	0	0	ES - 592
U0122	[Lost Communication With Vehicle Dynamics Control Module]	0	0	ES - 592
U0155	[Lost Communication With Instrument Panel Cluster (IPC) Control Module]	0	0	ES - 592
U0402	[Invalid Data Received From TCM]	0	0	ES - 592
U0416	[Invalid Data Received From Vehicle Dynamics Control Module]	0	0	ES - 592
U0423	[Invalid Data Received From Instrument Panel Cluster Control Module]	0	0	ES - 592

Symptom table

Symptom	Suspected Area	See page
Engine does not crank (Does not start)	Battery	BH - 3
	Starter	ST - 3
	Park/neutral position switch assembly*1	AT - 189
	Clutch start switch assembly*2	CL - 30
	Starter signal circuit	ES - 610, ES - 620
No initial combustion (Does not start)	ECM power source circuit	ES - 642
	Crankshaft position sensor	ES - 681
	Ignition system	ES - 652
	Fuel pump control circuit	ES - 602
	Fuel pump	FU - 56
	Fuel injector circuit	ES - 633
	Valve timing	EM - 13
	VC output circuit (ECM 5 V output)	ES - 636
	VVT sensor (for intake side)	ES - 314
	VVT sensor (for exhaust side)	ES - 326
	Starter signal circuit	ES - 610, ES - 620
	Engine immobiliser system	TD - 237
	ECM	ES - 670

Symptom	Suspected Area	See page
Engine cranks normally but difficult to start	Fuel pump control circuit	ES - 602
	Fuel pump (for high pressure)	FU - 61
	Fuel injector circuit	ES - 633
	Fuel injector assembly (for port injection)	FU - 29
	Fuel injector assembly (for direct injection)	FU - 39
	ECM power source circuit	ES - 642
	Starter signal circuit	ES - 610, ES - 620
	Engine coolant temperature sensor	ES - 696
	Intake system	IE - 4
	Ignition system	ES - 652
	Spark plug	ES - 658
	Throttle with motor body assembly	ES - 667
	Compression	EM - 2
Incomplete intermittent combustion occurs (Does not start)	Fuel pump control circuit	ES - 602
	Fuel line	FU - 9
	Ignition circuit	ES - 321
	Ignition system	ES - 652
	Fuel injector circuit	ES - 633
	Fuel injector assembly (for port injection)	FU - 29
	Fuel injector assembly (for direct injection)	FU - 39
	ECM power source circuit	ES - 642
	Starter signal circuit	ES - 610, ES - 620
	Crankshaft position sensor	ES - 681
	VVT sensor (for intake side)	ES - 314
	VVT sensor (for exhaust side)	ES - 326
	Valve timing	EM - 13
High engine idle speed	Throttle with motor body assembly	ES - 667
	Intake system	IE - 4
	A/C signal circuit	AC - 28
	ECM power source circuit	ES - 642
	Engine coolant temperature sensor	ES - 696
	PCV valve and hose	EC - 3
Low engine idle speed (Poor idling)	Throttle with motor body assembly	ES - 667
	A/C signal circuit	AC - 28
	Fuel pump control circuit	ES - 602
	Fuel pump	FU - 56
	Intake system	IE - 4
	PCV valve and hose	EC - 3

ES

Symptom	Suspected Area	See page
Rough idling	Compression	EM - 2
	Ignition system	ES - 652
	Spark plug	ES - 658
	Fuel injector circuit	ES - 633
	ECM power source circuit	ES - 642
	Fuel pump control circuit	ES - 602
	Fuel injector assembly (for port injection)	FU - 29
	Fuel injector assembly (for direct injection)	FU - 39
	Fuel pump (for high pressure)	FU - 61
	Fuel line	FU - 9
	Throttle with motor body assembly	ES - 667
	Intake system	IE - 4
	Purge valve	EC - 22
	PCV valve and hose	EC - 3
	Air fuel ratio sensor	ES - 708
	Heated oxygen sensor	ES - 712
	Mass air flow meter	ES - 676
	Knock sensor	ES - 702
Hunting (Poor idling)	Throttle with motor body assembly	ES - 667
	Intake system	IE - 4
	PCV valve and hose	EC - 3
	Air fuel ratio sensor	ES - 708
	Mass air flow meter	ES - 676
Hesitation/poor acceleration	Fuel pump control circuit	ES - 602
	Fuel pump (for high pressure)	FU - 61
	Fuel line	FU - 9
	Spark plug	ES - 658
	Ignition system	ES - 652
	Fuel injector circuit	ES - 633
	Fuel injector assembly (for port injection)	FU - 29
	Fuel injector assembly (for direct injection)	FU - 39
	ECM power source circuit	ES - 642
	Knock sensor	ES - 702
	Mass air flow meter	ES - 676
	Throttle with motor body assembly	ES - 667
	Intake system	IE - 4
	Valve timing	EM - 13
	Compression	EM - 2
	Brake override system	ES - 629
Surging (Poor driveability)	Spark plug	ES - 658
	Fuel pump control circuit	ES - 602
	Fuel pump (for high pressure)	FU - 61
	Ignition system	ES - 652
	Fuel injector circuit	ES - 633
	Fuel injector assembly (for port injection)	FU - 29
	Fuel injector assembly (for direct injection)	FU - 39
	ECM power source circuit	ES - 642
	Mass air flow meter	ES - 676
	Variable Valve Timing (VVT) system	ES - 663
	Compression	EM - 2

Symptom	Suspected Area	See page
Engine stalls soon after starting	Fuel pump control circuit	ES - 602
	Fuel pump (for high pressure)	FU - 61
	Spark plug	ES - 658
	Ignition system	ES - 652
	Fuel injector circuit	ES - 633
	Fuel injector assembly (for port injection)	FU - 29
	Fuel injector assembly (for direct injection)	FU - 39
	ECM power source circuit	ES - 642
	Mass air flow meter	ES - 676
	Variable Valve Timing (VVT) system	ES - 663
	Throttle with motor body assembly	ES - 667
	Intake system	IE - 4
	Engine immobiliser system	TD - 237
	PCV valve and hose	EC - 3
	Compression	EM - 2
Engine stalls only during A/C operation	A/C signal circuit	AC - 28
	ECM	ES - 670
Unable/difficult to refuel	Fuel system (canister, refueling valve, roll over valve, fuel tank, etc.)	-

*1: for Automatic Transmission

*2: for Manual Transmission

How to troubleshoot

1	Bring in the car

Next

2	Interview and phenomenon check

Next

3	Read DTC

(1) Check the DTC(s) related to engine and CAN communication system and the freeze frame data.

(2) When DTC is output or freeze frame data is displayed, store it.
CAUTION:
When clearing the DTC and/or freeze frame data, be sure to store the data before clearing it.

Result

Result	Go to
When DTC not related to CAN communication system is output.	A
When no DTC is output.	B
When DTC related to CAN communication system is output.	C

B	Go to Step 12.
C	Go to CAN communication section. (Refer to NW - 30)

A

4	Check repeatability of malfunction

(1) Perform repeatability test, referring to the result of the interview.

Result

Result	Go to
When malfunction is repeated	A
When malfunction is not repeated	B

ES

B → Go to Step 9.

A

5	List of diagnostic codes (main inspection parts) or troubleshooting for DTC

(1) Refer to list of diagnostic codes, and perform troubleshooting for DTC. (Refer to ES - 12)

Result

Result	Go to
When faulty points are not determined.	A
When faulty points are determined.	B

B → Go to Step 7.

A

6	System circuit inspection

(1) If the faulty parts are not specified after the diagnosis according to the inspection procedure, refer to the inspection method of the electrical circuit, and perform the circuit inspection again. (For system circuit figure, refer to ES - 29.)

Next

7	Repair faulty points

Next

8	Read DTC (Refer to ES - 28)

Next

Complete

9	Inspection for problems that do not normally occur (Refer to ES - 28)

Next

10	Repair faulty points

Next

11	Read DTC (Refer to ES - 28)

Next

Complete

12	Check repeatability of malfunction

(1) Perform repeatability test, referring to the result of the interview.

Result

Result	Go to
When malfunction is repeated	A
When malfunction is not repeated	B

B → Go to Step 19.

A

13	Symptom table

(1) Estimate the location of the faulty points from the result of the interview, and perform necessary inspection. (Refer to ES - 16)

Result

Result	Go to
Faulty points are not determined.	A
Faulty points are determined.	B

B → Go to Step 17.

A

14	Basic inspection

(1) Estimate the location of the faulty points from the result of the interview, and perform necessary inspection. (Refer to ES - 16)

Result

Result	Go to
Faulty points are not determined.	A
Faulty points are determined.	B

B → Go to Step 17.

A

15	Inspection with SSM4

(1) Check the data monitor and perform the active test. (Refer to ES - 43)

Result

Result	Go to
Faulty points are not determined.	A
Faulty points are determined.	B

B → Go to Step 17.

A

16	System circuit inspection

(1) If any defective point is not located in the areas outside of the engine control computer after diagnosis according to the inspection procedure, refer to the inspection method of the electrical circuit, and perform the circuit inspection again. (For system circuit figure, refer to ES - 29.)

Next

17	Repair faulty points

Next

18	Check trouble phenomenon

(1) Perform driving test referring to the result of the interview, and check that the malfunction does not recur.

Next

Complete

19	Symptom table

(1) Estimate the location of the faulty points from the result of the interview, and perform necessary inspection. (Refer to ES - 16)

Result

Result	Go to
Faulty points are not determined.	A
Faulty points are determined.	B

B → Go to Step 24.

A

20	Basic inspection

(1) Estimate the location of the faulty points from the result of the interview, and perform necessary inspection. (Refer to ES - 7)

Result

Result	Go to
When faulty points are not determined.	A
When faulty points are determined.	B

B → Go to Step 24.

A

21	Inspection with SSM4

(1) Check the data monitor and perform the active test. (Refer to ES - 43)

Result

Result	Go to
Faulty points are not determined.	A
Faulty points are determined.	B

B → Go to Step 24.

A

22	System circuit inspection

(1) If any defective point is not located in the areas outside of the engine control computer after diagnosis according to the inspection procedure, refer to the inspection method of the electrical circuit, and perform the circuit inspection again. (For system circuit figure, refer to ES - 29.)

Next

23	Inspection for problems that do not normally occur (Refer to ES - 28)

Next

24	Repair faulty points

Next

25	Check trouble phenomenon

(1) Perform driving test referring to the result of the interview, and check that the malfunction does not recur.

Next

Complete

Monitor status check

The purpose of the monitor result (mode 06) is to access the on-board diagnostic monitoring test result in the particular component or system that is continuously monitored. This is applicable to the catalyst and/or evaporative gas (EVAP) system.

ES

Owing to the monitoring result, the monitor status and test value (test lower limit, test upper limit) are displayed on the OBD II scan tool. These data are displayed after the monitor has been turned on by the vehicle.

If the test result value is not within the range of upper limit and lower limit, the ECM (PCM) regards this as an abnormality. If the test result value is at the limit, abnormality is likely to occur in the near future in the relevant component.

For details on particular procedures, refer to the operation manual for the scan tool to be used.

Advance/Retarded Intake Side (for Bank 1)

Monitor ID	Test ID	Scaling	Unit	Description
$35	$8B	Multiply by 0.5	°CA	Delay in VVT response (advanced)
$35	$8C	Multiply by 0.5	°CA	Delay in VVT response (retarded)
$35	$D3	Multiply by 0.5	°CA	VVT system diagnosis (abnormal deviation during target mid-lock request)
$35	$D5	Multiply by 0.5	°CA	VVT system diagnosis (abnormal deviation of target)

Advance/Retarded Intake Side (for Bank 2)

Monitor ID	Test ID	Scaling	Unit	Description
$36	$8B	Multiply by 0.5	°CA	Delay in VVT response (advanced)
$36	$8C	Multiply by 0.5	°CA	Delay in VVT response (retarded)
$36	$D3	Multiply by 0.5	°CA	VVT system diagnosis (abnormal deviation during target mid-lock request)
$36	$D5	Multiply by 0.5	°CA	VVT system diagnosis (abnormal deviation of target)

Advance/Retarded Exhaust Side (for Bank 1)

Monitor ID	Test ID	Scaling	Unit	Description
$35	$8D	Multiply by 0.5	°CA	Delay in VVT response (retarded)
$35	$8E	Multiply by 0.5	°CA	Delay in VVT response (advanced)
$35	$D6	Multiply by 0.5	°CA	VVT system diagnosis (abnormal deviation of target)

Advance/Retarded Exhaust Side (for Bank 2)

Monitor ID	Test ID	Scaling	Unit	Description
$36	$8D	Multiply by 0.5	°CA	Delay in VVT response (retarded)
$36	$8E	Multiply by 0.5	°CA	Delay in VVT response (advanced)
$36	$D6	Multiply by 0.5	°CA	VVT system diagnosis (abnormal deviation of target)

A/F Sensor Bank 1 Sensor 1

Monitor ID	Test ID	Scaling	Unit	Description
$01	$84	Multiply by 0.0000305	No dimension	Minimum value for air / fuel ratio sensor
$01	$85	Multiply by 0.0000305	No dimension	Maximum value for air/fuel ratio sensor
$01	$CF	Multiply by 0.0039062	No dimension	Increase and decrease in fluctuation for air/fuel ratio sensor
$01	$CD	Multiply by 0.0039062	No dimension	Increase and decrease in time for air/fuel ratio sensor
$01	$91	Multiply by 0.0039062	No dimension	Delay level changes from "rich" to "lean."
$01	$92	Multiply by 1	ms	Time ratio for rich/lean status
$01	$A3	Multiply by 0.0039062	No dimension	Delay level changes from "lean" to "rich."
$01	$A4	Multiply by 1	ms	Time ratio for lean/rich status
$01	$AC	Multiply by 1	ms	Waiting time on rich side
$01	$AD	Multiply by 1	ms	Time difference for rich/lean status
$01	$AE	Multiply by 1	ms	Waiting time on lean side
$01	$AF	Multiply by 1	ms	Time difference for lean/rich status

HO2 Sensor Bank 1 Sensor 2

Monitor ID	Test ID	Scaling	Unit	Description
$02	$05	Multiply by 1	ms	Rich to lean sensor threshold time (calculated)
$02	$06	Multiply by 1	ms	Lean to rich sensor threshold time (calculation)
$02	$07	Multiply by 0.001	V	Minimum sensor voltage for test cycle (calculated)
$02	$08	Multiply by 0.001	V	Maximum sensor voltage for test cycle (calculated)
$02	$A5	Multiply by 0.001	V	O2 Sensor Signal Biased Abnormal (Drop) Diagnosis (P-P voltage)
$02	$D1	Multiply by 1	ms	Delayed response from the rich to lean
$02	$D2	Multiply by 1	No dimension	Delayed response from the lean to rich

ES

Catalyst

Monitor ID	Test ID	Scaling	Unit	Description
$21	$89	Multiply by 0.0039062	No dimension	Oxygen storage capability for catalyst

EVAP Monitor (0.020")

Monitor ID	Test ID	Scaling	Unit	Description
$3C	$C1	Multiply by 0.25	Pa	4-1 mode test result
$3C	$C2	Multiply by 0.25	Pa	4-2 mode test result
$3C	$C3	Multiply by 0.25	Pa	5 mode test result
$3C	$C4	Multiply by 0.25	Pa	7 mode test result
$3C	$C5	Multiply by 0.25	Pa	8 mode test result
$3C	$C6	Multiply by 10	ms	9 mode test result
$3C	$C7	Multiply by 0.25	Pa	13 mode test result
$3C	$C8	Multiply by 0.25	Pa	15-1 mode test result
$3C	$C9	Multiply by 0.25	Pa	15-2 mode test result
$3C	$CA	Multiply by 0.25	Pa	16 mode test result

Purge Flow Monitor

Monitor ID	Test ID	Scaling	Unit	Description
$3D	$E2	Multiply by 0.25	Pa	ELCM Purge Flow Diagnosis

A/F Sensor Heater Bank 1 Sensor 1

Monitor ID	Test ID	Scaling	Unit	Description
$41	$9B	Multiply by 1	Ω	Oxygen sensor heater impedance

Oxygen Sensor Heater Bank 1 Sensor 2

Monitor ID	Test ID	Scaling	Unit	Description
$42	$E5	Multiply by 1	Ω	Air/fuel ratio sensor heater performance

Misfire

Monitor ID	Test ID	Scaling	Unit	Description
$A1	$0B	Multiply by 1	Time	Total number of misfires for EWMA* counted during the last driving cycle in all cylinders
$A1	$0C	Multiply by 1	Time	• With IG ON, the number of misfire counted during the last driving cycle in all cylinders is displayed. • When the engine is running, the number of misfire counted during current driving cycle in all cylinders is displayed.
$A2	$0B	Multiply by 1	Time	Total number of misfires for EWMA* counted during the last 10 driving cycles in cylinder #1
$A2	$0C	Multiply by 1	Time	• With IG ON, the number of misfire counted during the last driving cycle in cylinder #1 is displayed. • When the engine is running, the number of misfire counted during current driving cycle in cylinder #1 is displayed.
$A3	$0B	Multiply by 1	Time	Total number of misfires for EWMA* counted during the last 10 driving cycles in cylinder #2
$A3	$0C	Multiply by 1	Time	• With IG ON, the number of misfire counted during the last driving cycle in cylinder #2 is displayed. • When the engine is running, the number of misfire counted during current driving cycle in cylinder #2 is displayed.

Monitor ID	Test ID	Scaling	Unit	Description
$A4	$0B	Multiply by 1	Time	Total number of misfires for EWMA* counted during the last 10 driving cycles in cylinder #3
$A4	$0C	Multiply by 1	Time	• With IG ON, the number of misfire counted during the last driving cycle in cylinder #3 is displayed. • When the engine is running, the number of misfire counted during current driving cycle in cylinder #3 is displayed.
$A5	$0B	Multiply by 1	Time	Total number of misfires for EWMA* counted during the last 10 driving cycles in cylinder #4
$A5	$0C	Multiply by 1	Time	• With IG ON, the number of misfire counted during the last driving cycle in cylinder #4 is displayed. • When the engine is running, the number of misfire counted during current driving cycle in cylinder #4 is displayed.

NOTE:

*: EWMA (Exponential Weighted Moving Average) counted during the last 10 driving cycles

Arithmetic expression for obtaining the number of misfires: 0.1 ×(Current times) + 0.9 ×(Previous average) (Previous average) for initial value = 0

Measurement items for each DTC of [VVT monitor bank 1] and [VVT monitor bank 2]

Monitor ID	Test ID	Scaling	Unit	Description		
$35	$8B	Multiply by 0.5	°CA	+	Intake (bank 1)	Delay in VVT response (advanced)
$35	$8C	Multiply by 0.5	°CA	-		Delay in VVT response (retarded)
$35	$8D	Multiply by 0.5	°CA	+	Exhaust (bank 1)	Delay in VVT response (advanced)
$35	$8E	Multiply by 0.5	°CA	-		Delay in VVT response (retarded)
$36	$8B	Multiply by 0.5	°CA	+	Intake (bank 2)	Delay in VVT response (advanced)
$36	$8C	Multiply by 0.5	°CA	-		Delay in VVT response (retarded)
$36	$8D	Multiply by 0.5	°CA	+	Exhaust (bank 2)	Delay in VVT response (advanced)
$36	$8E	Multiply by 0.5	°CA	-		Delay in VVT response (retarded)

Check list for interview

1. Ask customers about requested items
   (1) According to the troubleshooting procedure mentioned above, ask the customers reliably about the requested items, referring to this check list for interview.

Engine Diagnosis Checklist for Interview

Vehicle model		Date of vehicle bring-in		History of bring-in	No / Yes (times)
Frame No.		Registration date		Registration No.	
		Occurrence date		Odometer reading km	km
Vehicle equipment					

Vehicle you used in the past	Main area for use / purpose
Customer's characteristics	
Customer specified content Warning light illumination On / Off ( )	

Interview result

System condition	Driving condition	Road surface	Others	Frequency of occurrence
Occurrence speed ( ) km/h	☐ Start moving	☐ Flat	Accel. opening angle	☐ Always
Shift position ( ) range	☐ Cruising	☐ Uphill ☐ Downhill	( ) %	☐ Only once
☐ Starting	☐ Accelerating	☐ Dry paved road	Ambient temp.	☐ Sometimes
☐ After starting	☐ Decelerating	☐ Wet paved road	( ) °C (°F)	
☐ For ( ) min. after starting	☐ Braking	☐ Unpaved road	Weather	☐ ( ) times/day
☐ For ( ) min. driving	☐ Turning	Rough road	( )	☐ ( ) times/week
☐ When cold	☐ Parking	☐ Snow road, icy road	Gasoline	☐ ( ) times/month
☐ When warm	☐ No relation	☐ Bumps, manhole etc.,	( )	
☐ When rotating	☐ Others	☐ Others		
☐ Others ( )	( )	( )		

Additional remarks

Inspection result

Confirmation of diagnostic code		
Illumination ☐ Off ☐ On	☐ Diagnostic code normal ☐ Diagnostic code abnormal (Fill-in all code.)	Fuel pressure during engine stop Fuel pressure for one minute after engine stop

Detail of phenomenon — Driving condition and place when phenomenon occurred/recurred

Status of recurrence ☐ Always ☐ Sometimes ☐ Continues for a while if once recurred ☐ Not recurred

Dealer name	Shop name	Front	Engineer

EN-21565

Checking / clearing DTC

1. Checking DTC (reading with SSM4)
   (1) Connect the SSM4 to the DLC3.
   (2) Turn the ignition switch to ON.
   (3) Turn on the SSM4.
   (4) Check diagnostic codes (current malfunction) using SSM4.
   (5) Check diagnostic codes (temporary code) using SSM4.
   NOTE:

ES

Displayed items	Contents
[Present fault]	DTCs that indicate the error
[Temporary Diagnostic Code(s)]	• DTCs that indicate the temporary error • Indicates the possibility of error though the error is not confirmed.
[Readiness code]	Self-diagnostic status can be monitored concerning the given DTC.

   - After the test drive, check that the self-diagnosis for the target DTC is completed successfully by confirming [Readiness code], and then check [Present fault] or [Temporary Diagnostic Code(s)].
   - For DTCs (P0171, etc.) that detect error in two trips, the error occurred in the first trip is stored to the engine control computer as temporary error.
   - Present fault stores the freeze frame data.

2. Clearing DTC using SSM4
   (1) Connect the SSM4 to the DLC3.
   (2) Turn the ignition switch to ON.
   (3) Turn on the SSM4.
   (4) Using the SSM4, select the following menu items, and clear the DTC : [Each System] / [Engine Control System] / [Clear Memory].
   CAUTION:
   - When the clearing DTC cannot be performed successfully, turn the ignition switch to OFF, and then retry the operation.
   - Do not clear the DTC using SSM4 until the cause of failure is identified.

   NOTE:
   Initial diagnosis of electronic throttle control is performed after DTC clearance. For this reason, the engine starting after DTC clearance must be performed more than 10 seconds after IG ON.

Freeze frame data

1. Check freeze data (reading with SSM4)
   NOTE:
   When the DTC is stored, the ECM data which indicates the vehicle status at that time is stored to the engine control computer as freeze frame data.
   (1) Connect the SSM4 to the DLC3.
   (2) Turn the ignition switch to ON.
   (3) Turn on the SSM4.
   (4) Read the freeze frame data using the SSM4.
2. List of freeze frame data
   For the list of freeze frame data, refer to "Data monitor / active test" (ES - 43).

Inspection for problems that do not normally occur

1. Inspection for problems that do not normally occur
   (1) Clear the DTC. (Refer to ES - 28)
   (2) Perform repeatability test.
   (3) Perform visible inspection and connection inspection of the connector and each terminal.
   (4) Check the wiring harness and connector for excessive force.

Circuit figure

w/ Entry and Start System:

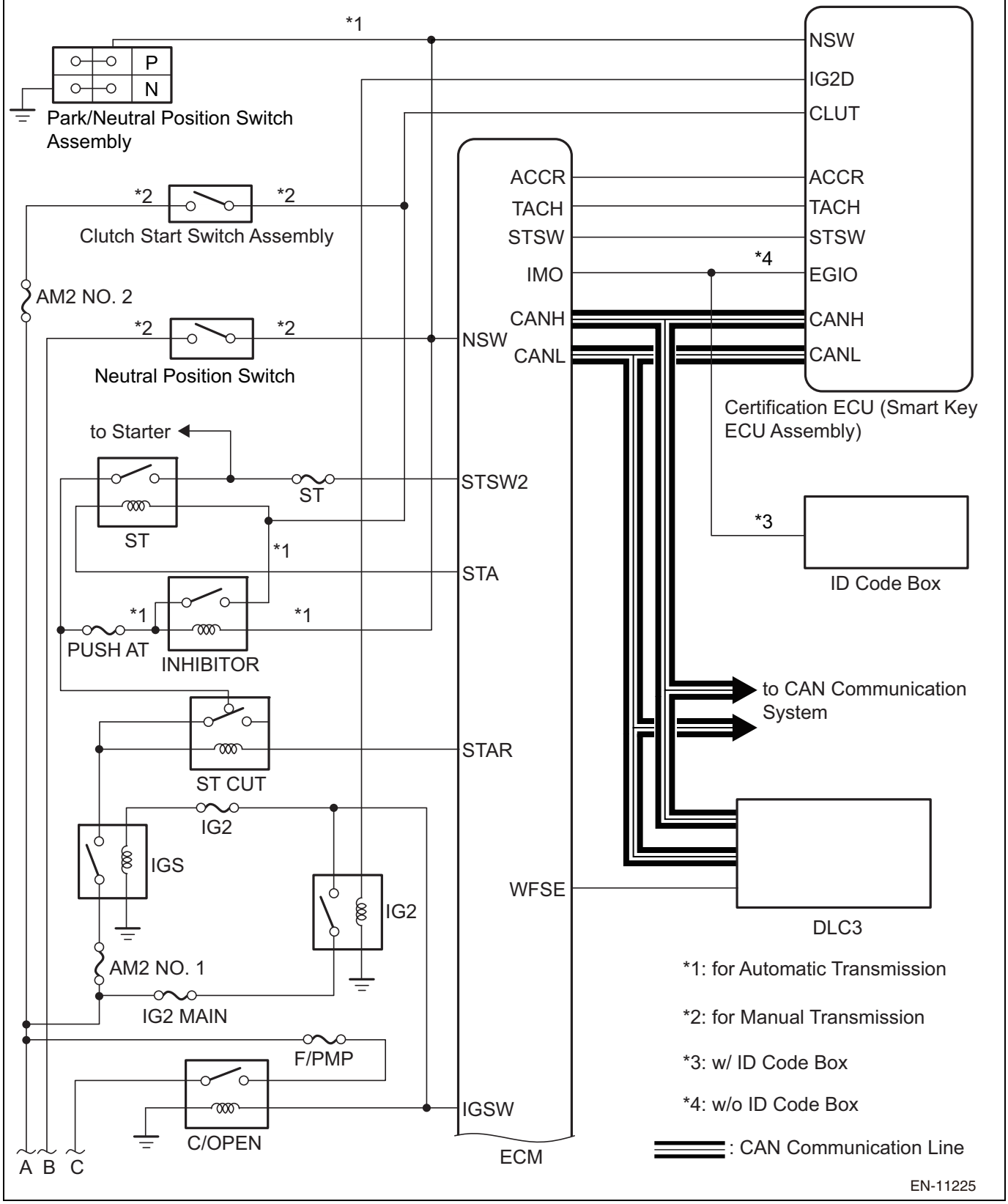

ES

w/o Entry and Start System:

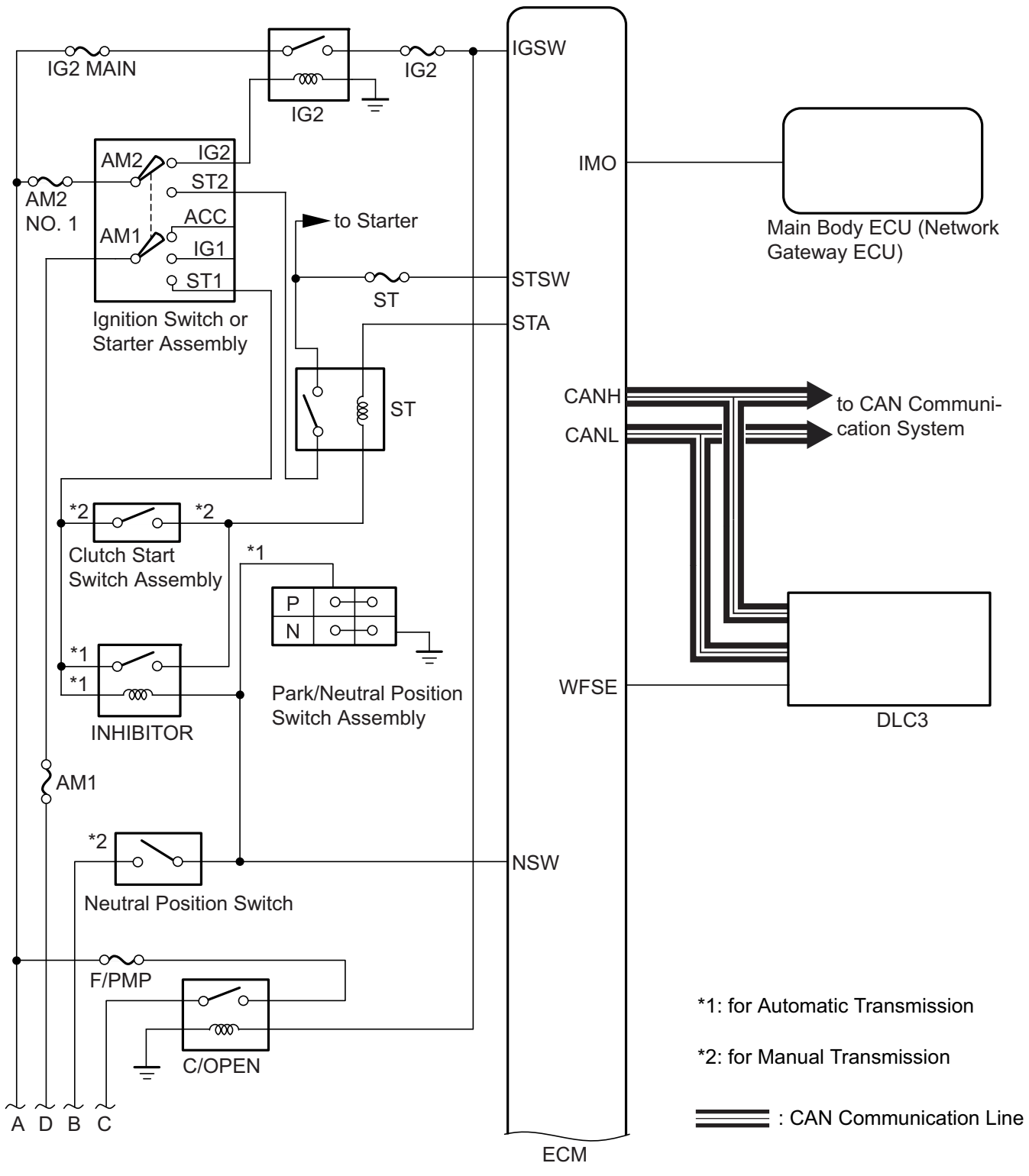

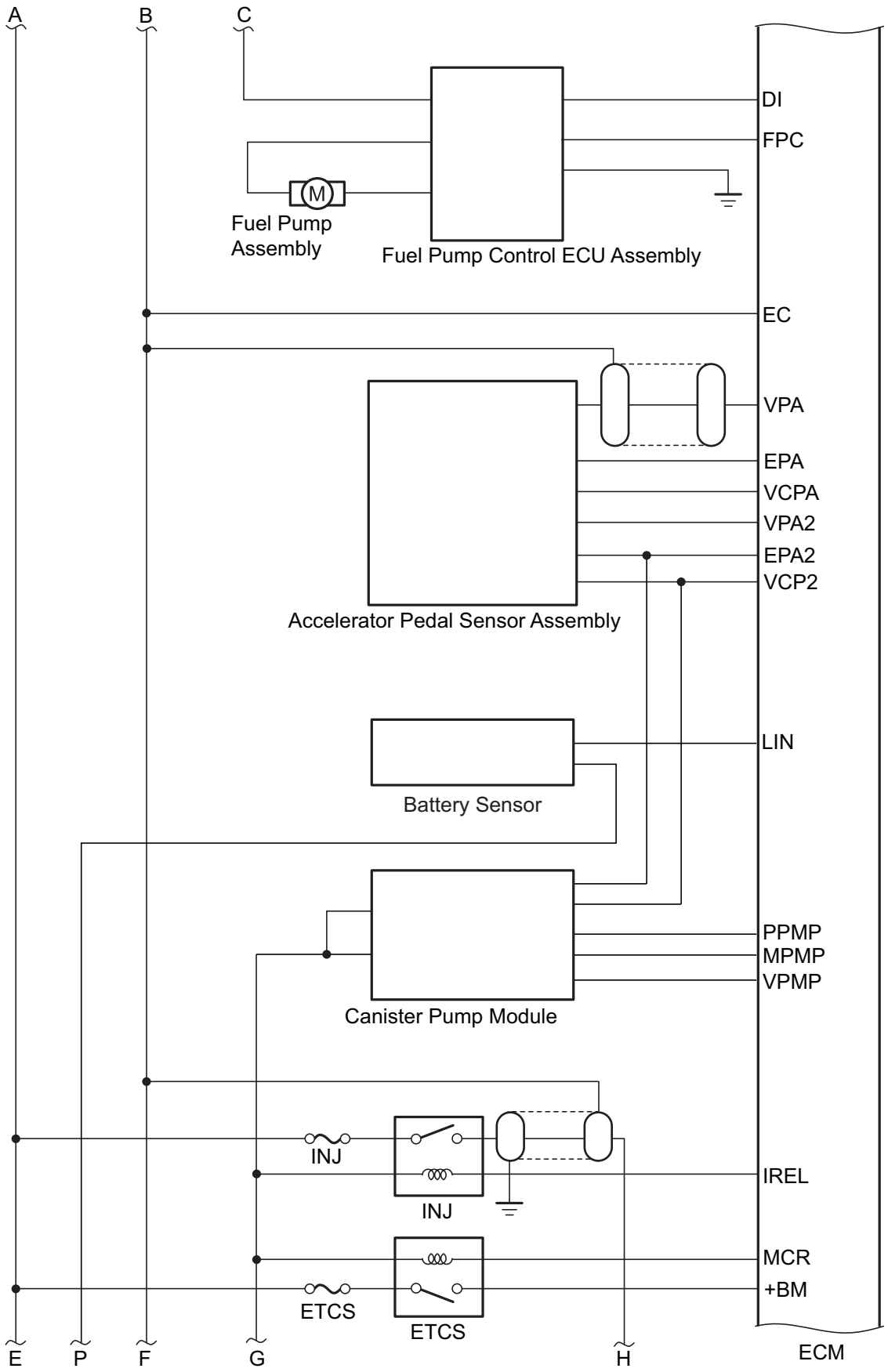
A
B
C
DI
FPC
M
Fuel Pump Assembly
Fuel Pump Control ECU Assembly
EC
VPA
EPA
VCPA
VPA2
EPA2
VCP2
Accelerator Pedal Sensor Assembly
LIN
Battery Sensor
PPMP
MPMP
VPMP
Canister Pump Module
INJ
INJ
IREL
MCR
+BM
ETCS
ETCS
E
P
F
G
H
ECM

EN-21680

ES

ES

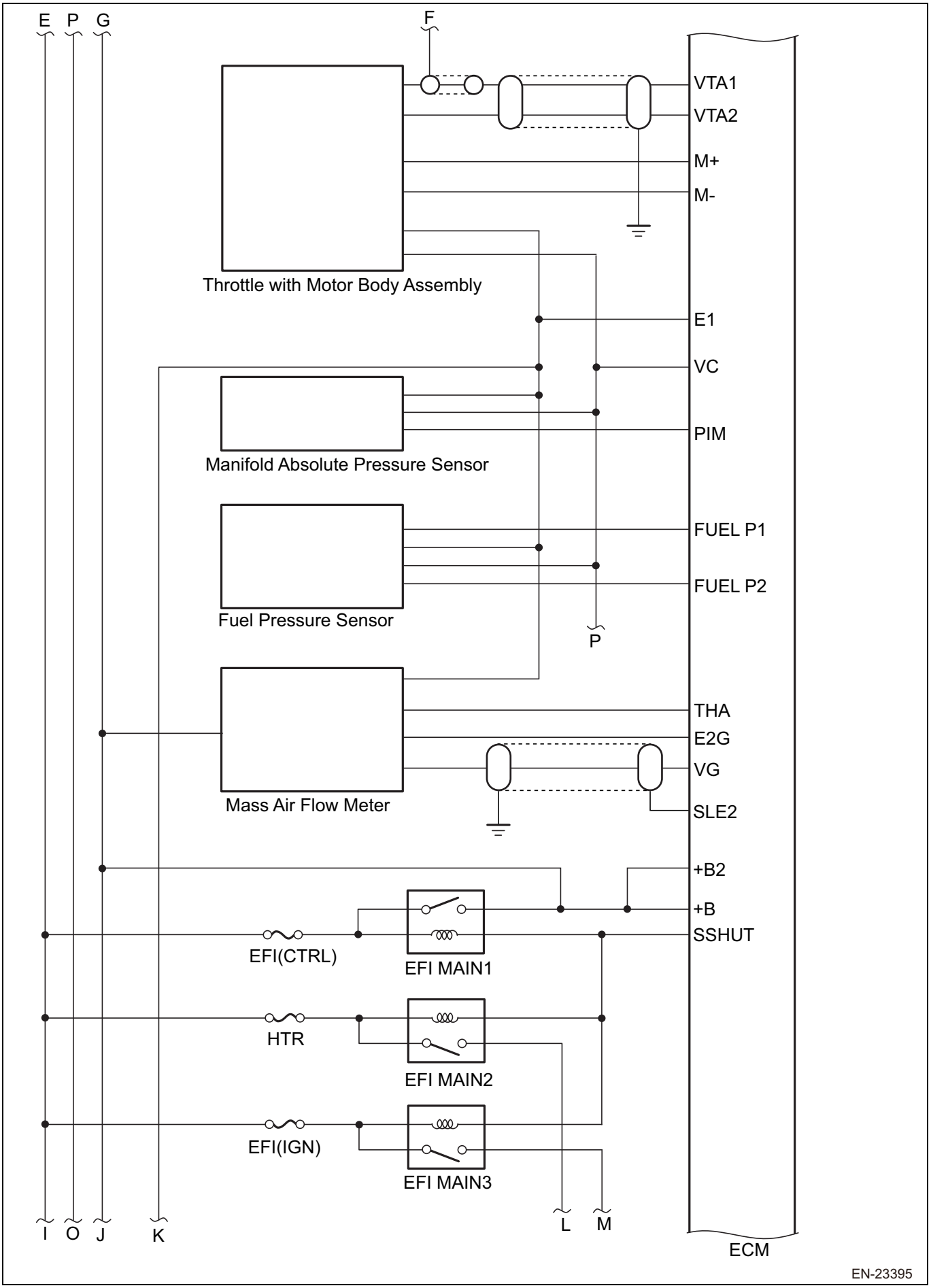
E
P
G
F
VTA1
VTA2
M+
M-
Throttle with Motor Body Assembly
E1
VC
PIM
Manifold Absolute Pressure Sensor
FUEL P1
FUEL P2
Fuel Pressure Sensor
P
THA
E2G
VG
SLE2
Mass Air Flow Meter
+B2
+B
SSHUT
EFI(CTRL)
EFI MAIN1
HTR
EFI MAIN2
EFI(IGN)
EFI MAIN3
I
O
J
K
L
M
ECM
EN-23395

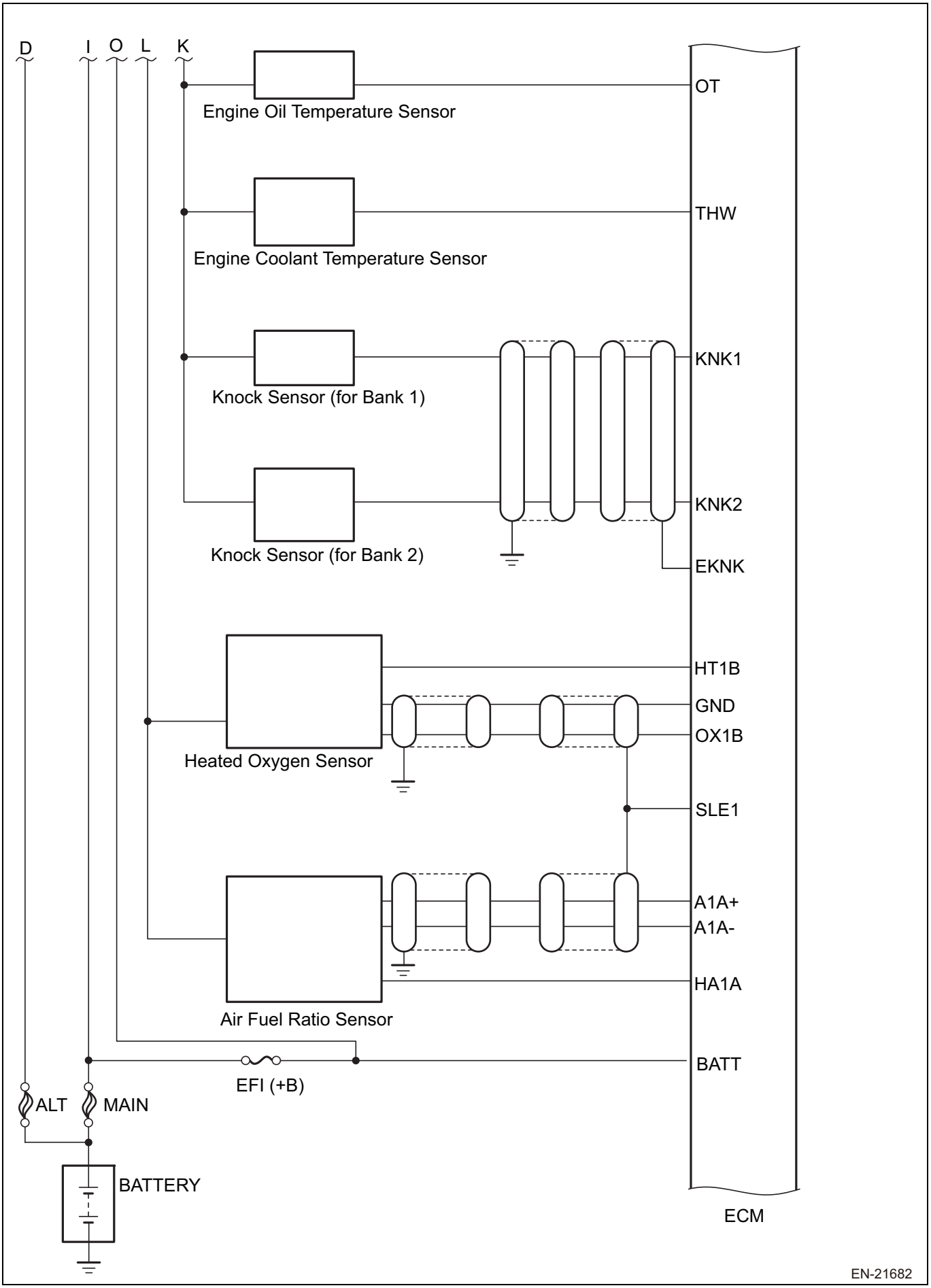
D
I
O
L
K
Engine Oil Temperature Sensor
OT
Engine Coolant Temperature Sensor
THW
Knock Sensor (for Bank 1)
KNK1
Knock Sensor (for Bank 2)
KNK2
EKNK
Heated Oxygen Sensor
HT1B
GND
OX1B
SLE1
Air Fuel Ratio Sensor
A1A+
A1A-
HA1A
EFI (+B)
BATT
ALT
MAIN
BATTERY
ECM
EN-21682

ES

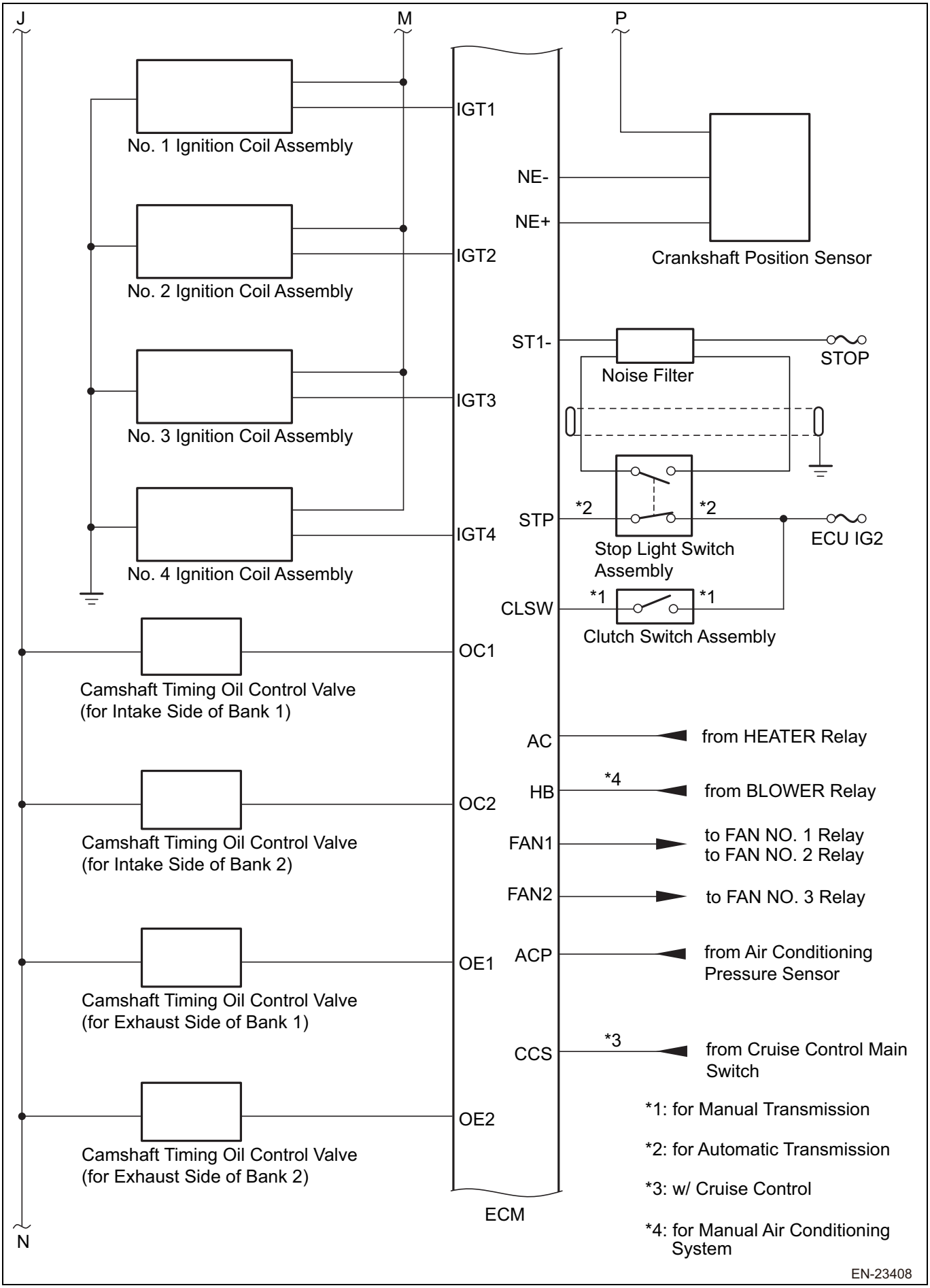
J
M
P
IGT1
No. 1 Ignition Coil Assembly
NE-
NE+
Crankshaft Position Sensor
IGT2
No. 2 Ignition Coil Assembly
ST1-
STOP
Noise Filter
IGT3
No. 3 Ignition Coil Assembly
*2
*2
STP
ECU IG2
Stop Light Switch Assembly
IGT4
No. 4 Ignition Coil Assembly
*1
*1
CLSW
Clutch Switch Assembly
OC1
Camshaft Timing Oil Control Valve (for Intake Side of Bank 1)
AC
from HEATER Relay
*4
HB
from BLOWER Relay
OC2
Camshaft Timing Oil Control Valve (for Intake Side of Bank 2)
FAN1
to FAN NO. 1 Relay
to FAN NO. 2 Relay
FAN2
to FAN NO. 3 Relay
ACP
from Air Conditioning Pressure Sensor
OE1
Camshaft Timing Oil Control Valve (for Exhaust Side of Bank 1)
*3
CCS
from Cruise Control Main Switch
OE2
Camshaft Timing Oil Control Valve (for Exhaust Side of Bank 2)
*1: for Manual Transmission
*2: for Automatic Transmission
*3: w/ Cruise Control
*4: for Manual Air Conditioning System
ECM
N
EN-23408

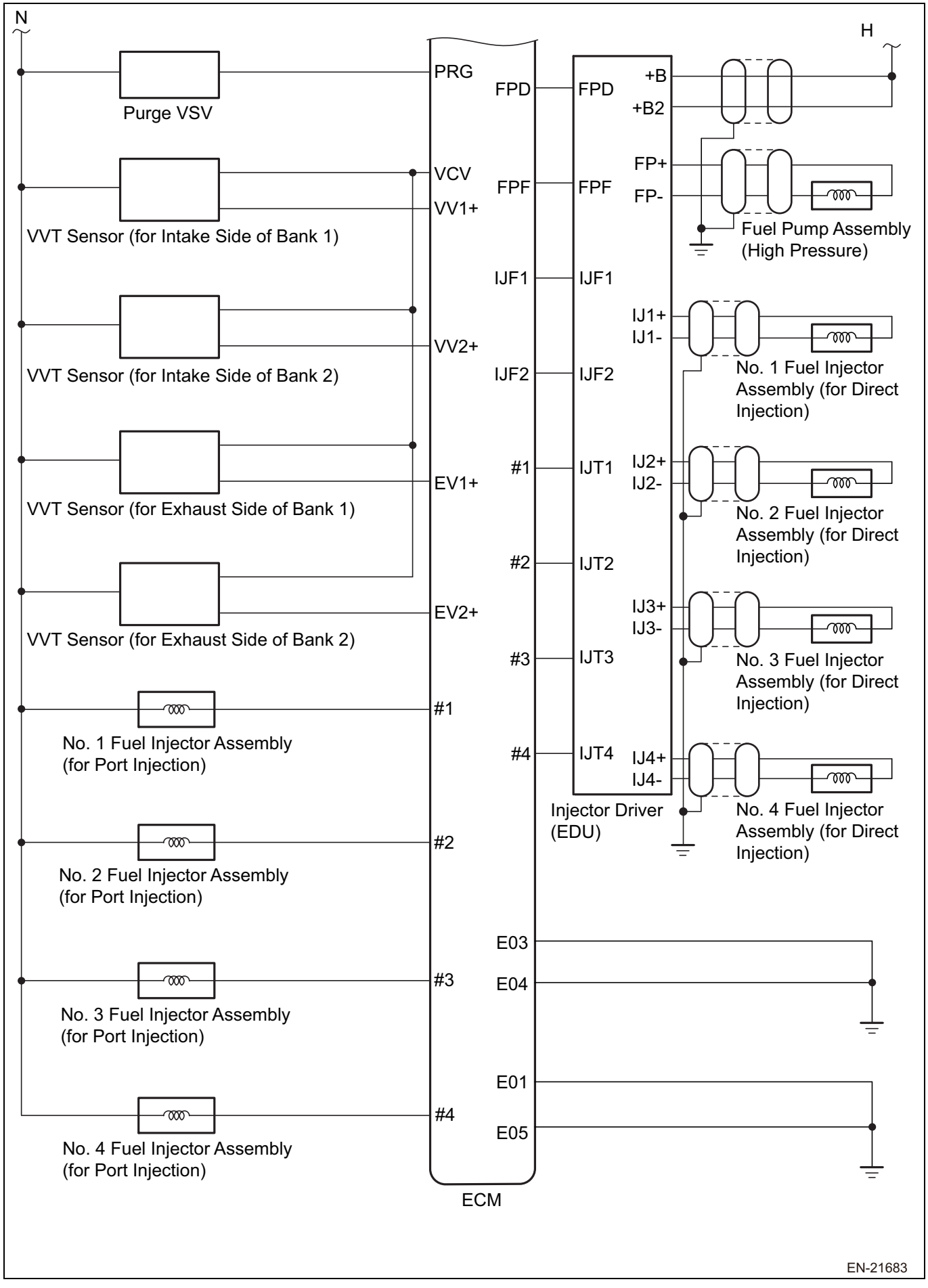
N
H
PRG
FPD
VCV
FPF
VV1+
IJF1
VV2+
IJF2
EV1+
#1
EV2+
#2
#3
#4
E03
E04
E01
E05
ECM
FPD
+B
+B2
FP+
FP-
IJF1
IJ1+
IJ1-
IJF2
IJT1
IJ2+
IJ2-
IJT2
IJ3+
IJ3-
IJT3
IJT4
IJ4+
IJ4-
Injector Driver
(EDU)
Purge VSV
VVT Sensor (for Intake Side of Bank 1)
VVT Sensor (for Intake Side of Bank 2)
VVT Sensor (for Exhaust Side of Bank 1)
VVT Sensor (for Exhaust Side of Bank 2)
No. 1 Fuel Injector Assembly
(for Port Injection)
No. 2 Fuel Injector Assembly
(for Port Injection)
No. 3 Fuel Injector Assembly
(for Port Injection)
No. 4 Fuel Injector Assembly
(for Port Injection)
Fuel Pump Assembly
(High Pressure)
No. 1 Fuel Injector
Assembly (for Direct
Injection)
No. 2 Fuel Injector
Assembly (for Direct
Injection)
No. 3 Fuel Injector
Assembly (for Direct
Injection)
No. 4 Fuel Injector
Assembly (for Direct
Injection)
EN-21683

ECM terminal arrangement

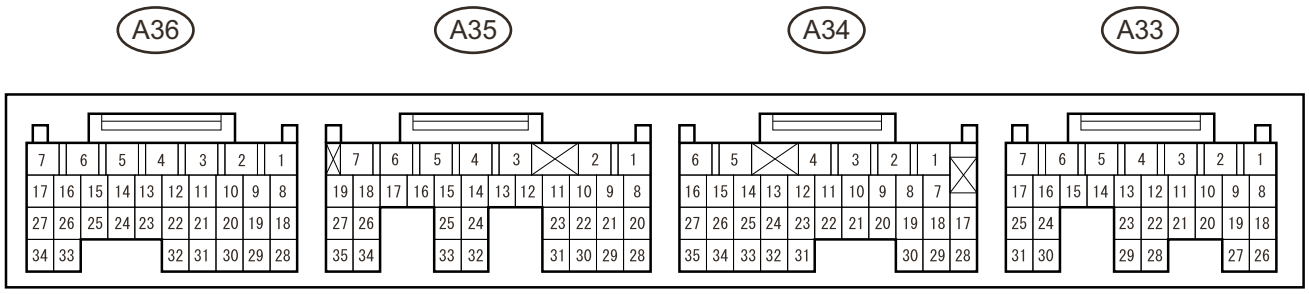

NOTE:

The standard voltages specified for ECM terminals are listed below. Appropriate conditions required for inspection of each terminal are also described. Compare the inspection result with the value in "Standard value." Refer to the figure shown above, and locate the position of the ECM terminal.

Terminal No. (symbol)	Terminal description	Inspection conditions	Standard value
A33-1 (+B2) - A36-4 (E01)	ECM power supply	IG ON	12 to 14 V
A33-2 (BATT) - A36-4 (E01)	Battery (Prepared for battery voltage measurement, and for ECM memory)	Always	10 to 13 V
A33-3 (ST1-) - A36-4 (E01)	Stop light switch	Brake pedal is depressed	11 to 14 V
		Brake pedal is released	0 to 1 V
A33-7 (STP) - A36-4 (E01)*1	Stop light switch	Brake pedal is depressed	0 to 1 V
		Brake pedal is released	11 to 14 V
A33-8 (ACP) - A36-4 (E01)	Air conditioner pressure sensor	IG ON, A/C ON	0 to 1 V
		Idling, A/C OFF	12 to 14 V
A33-12 (THA) - A36-29 (E1)	Intake air temperature sensor (Integrated into the intake air flow meter SUB-ASSY)	IG ON	0.3 to 4.6 V
A33-14 (STSW2) - A36-4 (E01)*3	Starter signal	IG ON	0 to 1 V
		Cranking	6 to 13 V
A33-15 (CLSW) - A36-4 (E01)*2	Clutch switch	IG ON, clutch pedal depressed	0 to 1 V
		IG ON, clutch pedal depressed	10 to 13 V
A33-16 (NSW) - A36-4 (E01)	Neutral switch signal	With IG ON, the shift lever is at P or N position. *1 With IG ON, the shift lever is at N position. *2	0 to 1 V
		With IG ON, the shift lever is except at P or N position. *1 With IG ON, the shift lever is except at N position. *2	10 to 13 V
A33-17 (STSW2) - A36-4 (E01)	Starter signal *3 *4	IG ON	0 to 1 V
		Cranking *3	More than 6 V
		Cranking *4	6 to 13 V
A33-18 (CANL) - A36-4 (E01)	CAN communication line	IG ON	Pulse generation (Refer to waveform 1.)
A33-19 (CANH) - A36-4 (E01)	CAN communication line	IG ON	Pulse generation (Refer to waveform 2.)
A33-20 (HB) - A36-4 (E01)*9	Blower relay	With IG ON, the blower fan switch is turned to ON.	0 to 1 V
		With IG ON, the blower fan switch is turned to OFF.	10 to 13 V

Terminal No. (symbol)	Terminal description	Inspection conditions	Standard value
A33-22 (VG) - A33-29 (E2G)	Intake air flow meter SUB-ASSY	Idling, warm-up operation of engine	0.9 to 4.5 V
A33-27 (IGSW) - A36-4 (E01)	IG2 relay	IG ON	10 to 13 V
A34-5 (HA1A) - A36-4 (E01)	Air/fuel ratio sensor (bank 1 sensor 1) heater	Idling, cool-down operation of engine	Pulse generation (Refer to waveform 3.)
A34-6 (+B) - A36-4 (E01)	ECM power supply	IG ON	12 to 14 V
A34-9 (FUEL P1) - A36-29 (E1)	Fuel pressure sensor	Idling, warm-up operation of engine	1.0 to 1.7 V
A34-7 (FUEL P2) -A36-29 (E1)	Fuel pressure sensor (sub)	Idling, warm-up operation of engine	
A34-11 (IJF1) - A36-4 (E01)	Confirmation signal for direct injection of injector	Idling	Pulse generation (Refer to waveform 4.)
A34-13 (FPF) - A36-4 (E01)	High pressure side fuel pump (spill valve)	Idling	Pulse generation (Refer to waveform 5.)
A34-14 (EV1+) - A36-4 (E01)	Variable valve timing (VVT) sensor (exhaust side (bank 1))	Idling, warm-up operation of engine	Pulse generation (Refer to waveform 6.)
A34-15(VV2+) - A36-4 (E01)	Variable valve timing (VVT) sensor (intake side (bank 2))	Idling, warm-up operation of engine	Pulse generation (Refer to waveform 7.)
A34-16 (NE+) - A34-27 (NE-)	Crankshaft position sensor	Idling, warm-up operation of engine	Pulse generation (Refer to waveform 6 or 7.)
A34-17 (KNK2) - A36-29 (E1)	Knock control sensor	IG ON	Approx. 2.5 V
A34-18 (A1A-) - A36-4 (E01)	Air / fuel ratio sensor	IG ON	2.4 to 2.7 V
A34-19 (A1A+) - A36-4 (E01)	Air / fuel ratio sensor	IG ON	2.8 to 3.2 V
A34-20 (PIM) - A36-29 (E1)	Intake manifold pressure sensor	Idling, warm-up operation of engine	1.1 to 2.0 V
A34-21 (OX1B) - A34-8 (E01)	Oxygen sensor	Idling, warm-up operation of engine	0 to 0.9 V
A34-25 (EV2+) - A36-4 (E01)	Variable valve timing (VVT) sensor (exhaust side (bank 2))	Idling, warm-up operation of engine	Pulse generation (Refer to waveform 6.)
A34-26 (VV1+) - A36-4 (E01)	Variable valve timing (VVT) sensor (intake side (bank 1))	Idling, warm-up operation of engine	Pulse generation (Refer to waveform 7.)
A34-28 (KNK1) - A36-29 (E1)	Knock control sensor	IG ON	Approx. 2.5 V
A34-31 (IJF2) - A36-4 (E01)	Confirmation signal for direct injection of injector	Idling	Pulse generation (Refer to waveform 4.)
A34-32 (FPD) - A36-4 (E01)	High pressure side fuel pump (spill valve)	Idling	Pulse generation (Refer to waveform 5.)
A34-34 (VCV) - A36-4 (E01)	Camshaft timing oil control valve (OCV) ground	IG ON	0 to 1 V
A35-1 (VPMP) - A36-4 (E01)	Vent valve (integrated into canister pump module)	IG ON	10 to 13 V
A35-5 (IREL) - A36-4 (E01)	IINJ relay	Idling	10 to 13 V
		IG ON	0 to 1 V
A35-7 (+BM) - A36-4 (E01)	ETCS relay	IG ON	10 to 13 V
A35-8 (MPMP) - A36-4 (E01)	Leak detection pump (integrated into canister pump module)	IG ON	10 to 13 V
		Leak detection pump ON	0 to 1 V
A35-10 (DI) - A36-4 (E01)	Fuel pump control (Detects malfunction in fuel pump control.)	IG ON	10 to 12 V
A35-11 (FAN1) - A36-4 (E01)	Fan No. 3 relay *5 Fan No. 1 relay *6	IG ON Cooling fan is not operating.	10 to 13 V
		Cooling fan operates at idling speed, A/C ON or high engine coolant temperature. *5	0 to 0.5 V
		Cooling fan operates at high engine coolant temperature. *6	0 to 0.5 V
A35-12 (FAN2) - A36-4 (E01)*5	Fan No. 2 relay	IG ON	10 to 13 V
		Cooling fan operates at idling speed, A/C ON or high engine coolant temperature. *5	0 to 0.5 V
A35-13 (SSHUT) - A36-4 (E01)	EFI MAIN1 relay	IG ON	0 to 1 V
A35-15 (TACH) - A36-4 (E01)*3	Engine Speed	Hold the engine speed at 1500 r/min.	Pulse generation (Refer to waveform 8.)
A35-17 (MCR) - A36-4 (E01)	ETCS relay	IG ON	0 to 1 V

Terminal No. (symbol)	Terminal description	Inspection conditions	Standard value
A35-19(FPC) - A36-4 (E01)	Fuel pump control	IG ON	Pulse generation (Refer to waveform 9.)
A35-20 (PPMP) - A36-4 (E01)	Canister pressure sensor (integrated into canister pump module)	IG ON	1.5 to 4.0 V
A35-21 (VCPA) - A36-4 (E01)	Accelerator pedal position sensor power supply	IG ON	4.5 to 5.5 V
A35-22 (VCP2) - A36-4 (E01)	Accelerator pedal position sensor power supply	IG ON	4.5 to 5.5 V
A35-23 (VPA) - A35-29 (EPA)	Accelerator pedal position sensor (engine control)	With IG ON, the accelerator pedal is fully open.	Approx. 0.7 V
		With IG ON, the accelerator pedal is fully closed.	Approx. 3.1 V
A35-26 (STA) - A36-4 (E01)	ST relay	IG ON	10 to 13 V
		Cranking	0 to 1 V
A35-31 (VPA2) - A35-30 (EPA2)	Accelerator pedal position sensor (for detection of sensor malfunction)	With IG ON, the accelerator pedal is fully open.	Approx. 0.7 V
		With IG ON, the accelerator pedal is fully closed.	Approx. 3.1 V
A35-32 (ACCR) - A36-4 (E01)*3	Request for accessory cutoff	IG ON	0 to 0.5 V
		Cranking	12 to 14 V
A35-34 (STAR) - A36-4 (E01)*3	ST Cut Relay	IG ON	0 to 0.5 V
		Cranking	8 to 13 V
A35-35 (AC) - A36-4 (E01)	HEATER relay	Idling, A/C ON	0 to 0.5 V
		Idling, A/C OFF	12 to 14 V
A36-1 (M-) - A36-4 (E01)	Throttle actuator	Idling, warm-up operation of engine	Pulse generation (Refer to waveform 10.)
A36-2 (M+) - A36-4 (E01)	Throttle actuator	Idling, warm-up operation of engine	Pulse generation (Refer to waveform 10.)
A36-5 (OE2) - A36-4 (E01)	Camshaft timing oil control valve (OCV) (exhaust side (bank 2))	IG ON	11 to 14 V
		Idling, warm-up operation of engine	Pulse generation (Refer to waveform 11.)
A36-6 (HT1B) - A36-4 (E01)	Oxygen sensor heater	IG ON	11 to 14 V
		Idling, cool-down operation of engine	Pulse generation (Refer to waveform 12.)
A36-7 (OE1) - A36-4 (E01)	Camshaft timing oil control valve (OCV) (exhaust side (bank 1))	IG ON	11 to 14 V
		Idling, warm-up operation of engine	Pulse generation (Refer to waveform 11.)
A36-8 (IGT4) - A36-4 (E01)	Ignition coil (ignition signal)	Idling, warm-up operation of engine	Pulse generation (Refer to waveform 13.)
A36-10 (IGT2) - A36-4 (E01)	Ignition coil (ignition signal)	Idling, warm-up operation of engine	Pulse generation (Refer to waveform 13.)
A36-11 (PRG) - A36-4 (E01)	Purge VSV	When one of the following conditions is met: • IG ON • Idling, warm-up operation of engine, purge control in progress	Pulse generation (Refer to waveform 14.)
A36-12 (#10) - A36-4 (E01)	Injector for port injection	Idling, warm-up operation of engine	Pulse generation (Refer to waveform 15.)
A36-13 (#40) - A36-4 (E01)	Injector for port injection	Idling, warm-up operation of engine	Pulse generation (Refer to waveform 15.)
A36-14 (#1) - A36-4 (E01)	Injector for direct injection	Idling, warm-up operation of engine	Pulse generation (Refer to waveform 4.)
A36-16 (OC2) - A36-4 (E01)	Variable valve timing (VVT) sensor (intake side (bank 2))	IG ON	11 to 14 V
		Idling, warm-up operation of engine	Pulse generation (Refer to waveform 11.)
A36-17 (OC1) - A36-4 (E01)	Variable valve timing (VVT) sensor (intake side (bank 1))	IG ON	11 to 14 V
		Idling, warm-up operation of engine	Pulse generation (Refer to waveform 11.)

Terminal No. (symbol)	Terminal description	Inspection conditions	Standard value
A36-18 (VTA1) - A36-29 (E1)	Throttle position sensor (engine control)	With IG ON, the accelerator pedal is fully open.	Approx. 0.6 V
		With IG ON, the accelerator pedal is fully closed.	Approx. 4.2 V
A36-19 (VC) - A36-29 (E1)	Sensor power supply (voltage)	IG ON	4.5 to 5.5 V
A36-20 (OT) - A36-29 (E1)	Oil temperature sensor	Idling	0.5 to 1.4 V
A36-21 (IGT1) - A36-4 (E01)	Ignition coil (ignition signal)	Idling, warm-up operation of engine	Pulse generation (Refer to waveform 13.)
A36-22 (#20) - A36-4 (E01)	Injector for port injection	Idling, warm-up operation of engine	Pulse generation (Refer to waveform 15.)
A36-23 (#4) - A36-4 (E01)	Injector for direct injection	Idling, warm-up operation of engine	Pulse generation (Refer to waveform 4.)
A36-24 (#3) - A36-4 (E01)	Injector for direct injection	Idling, warm-up operation of engine	Pulse generation (Refer to waveform 4.)
A36-25 (#2) - A36-4 (E01)	Injector for direct injection	Idling, warm-up operation of engine	Pulse generation (Refer to waveform 4.)
A36-28 (VTA2) - A36-29 (E1)	Throttle position sensor (for detection of sensor malfunction)	With IG ON, the accelerator pedal is fully open.	Approx. 1.5 V
		With IG ON, the accelerator pedal is fully closed.	Approx. 4.3 V
A36-30 (THW) - A36-29 (E1)	E.F.I. water temperature sensor	Idling, engine coolant temperature at 60 to 120°C {140 to 248°F}	0.8 to 1.8 V
A36-31 (IGT3) - A36-4 (E01)	Ignition coil (ignition signal)	Idling, warm-up operation of engine	Pulse generation (Refer to waveform 13.)
A36-32 (#30) - A36-4 (E01)	Injector for port injection	Idling, warm-up operation of engine	Pulse generation (Refer to waveform 15.)
A33-4 (EC) - chassis ground	Ground	Always	Less than 1 Ω
A33-28 (SLE2) - chassis ground	Shielded wire	Always	Less than 1 Ω
A34-1 (EC3) - chassis ground	Ground	Always	Less than 1 Ω
A34-2 (EC4) - chassis ground	Ground	Always	Less than 1 Ω
A34-3 (E05) - chassis ground	Ground	Always	Less than 1 Ω
A34-29 (EKNK) - chassis ground	Shielded wire	Always	Less than 1 Ω
A34-30 (SLE1) - chassis ground	Shielded wire	Always	Less than 1 Ω
A34-35 (SLE3) - chassis ground	Shielded wire	Always	Less than 1 Ω
A36-3 (E02) - chassis ground	Ground	Always	Less than 1 Ω
A36-4 (E01) - chassis ground	Ground	Always	Less than 1 Ω
A35-29 (EPA) - A36-4 (E01)	Ground	IG ON	0 to 1 V
A35-30 (EPA2) - A36-4 (E01)	Ground	IG ON	0 to 1 V

*1: Automatic transmission
*2: Manual transmission
*3: Models with smart entry & start system
*4: Models without smart entry & start system
*5: Models with air conditioner
*6: Models without air conditioner
*7: Models with ID code box
*8: Models without ID code box
*9: Manual air conditioning system

1. Waveform
   NOTE:
   Oscilloscope waveforms shown below are just the reference, and the waveforms for noise and chattering are omitted.

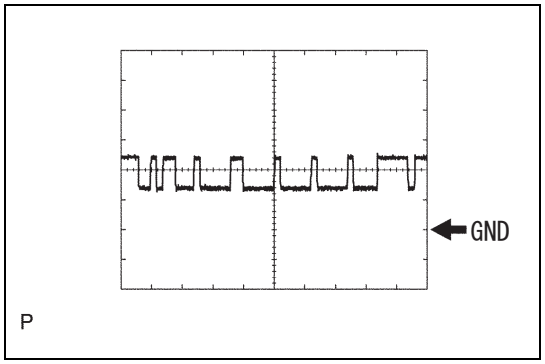

(1) Waveform 1

Item	Contents
Measuring terminal	CANL ←→E01
Equipment setting	1 V/DIV, 10 μs/DIV
Condition	Engine stop, IG ON

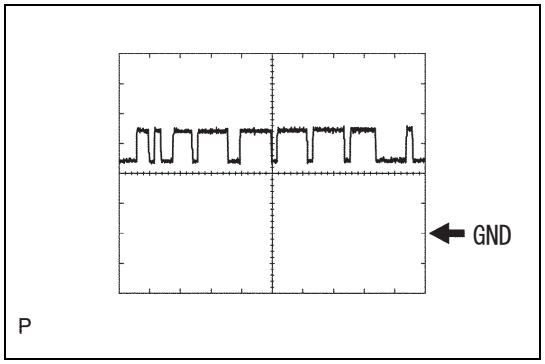

(2) Waveform 2

Item	Contents
Measuring terminal	CANH ←→E01
Equipment setting	1 V/DIV, 10 μs/DIV
Condition	Engine stop, IG ON

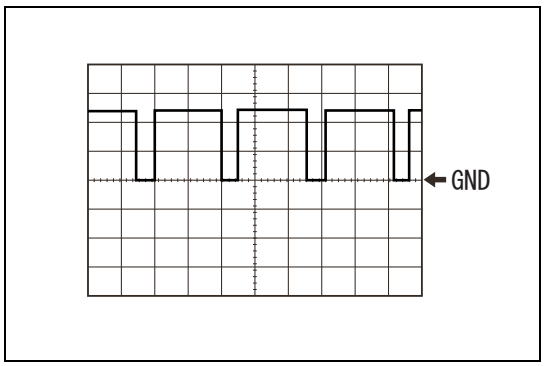

(3) Waveform 3

Item	Contents
Measuring terminal	HA1A ←→E01
Equipment setting	5 V/div, 50 ms/div
Condition	While engine idling before warming up air/fuel ratio sensor

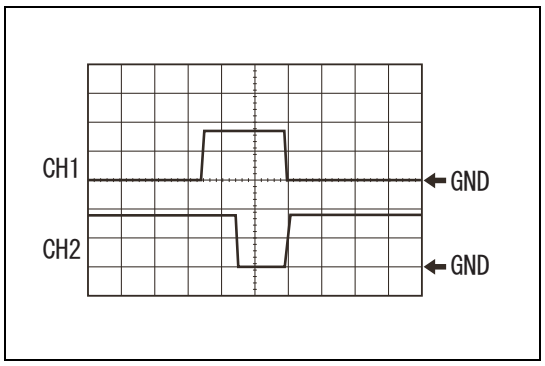

(4) Waveform 4

Item	Contents
Measuring terminal	CH1: #1, #2, #3, #4 ←→E01 CH2: IJF1, IJF2 ←→E01
Equipment setting	2 V/div, 40 μs/div
Condition	After warm-up, during idling

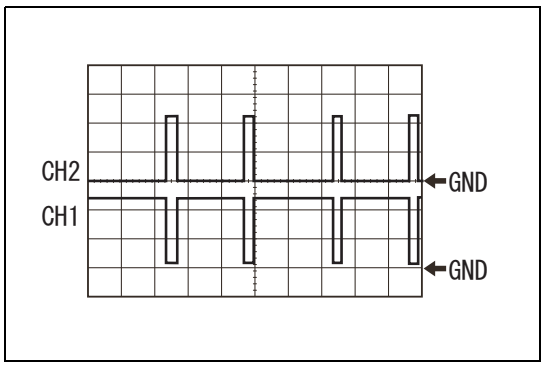

(5) Waveform 5

Item	Contents
Measuring terminal	CH1: FPD ←→E01 CH2: FPF ←→E01
Equipment setting	2 V/div, 20 ms/div
Condition	After warm-up, during idling

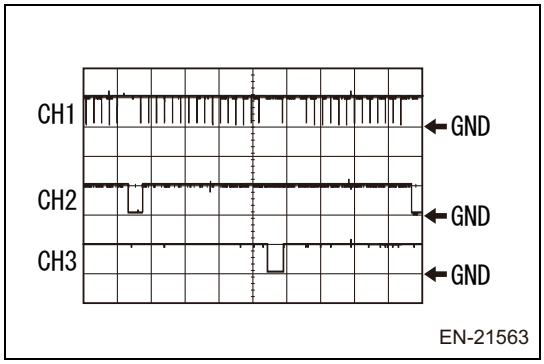

(6) Waveform 6

Item	Contents
Measuring terminal	CH1: NE+ ←→NE- CH2: EV1+ ←→E01 CH3: EV2+ ←→E01
Equipment setting	5 V/div, 10 ms/div
Condition	After warm-up, during idling

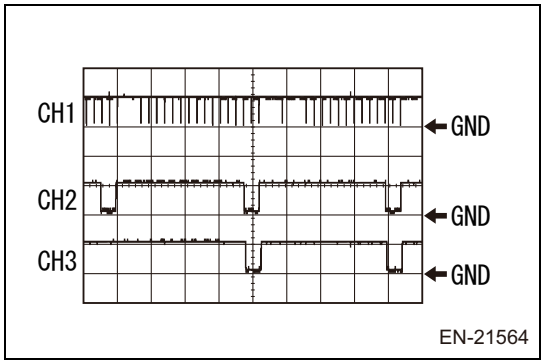

(7) Waveform 7

Item	Contents
Measuring terminal	CH1: NE+ ←→NE- CH2: VV1+ ←→E01 CH3: VV2+ ←→E01
Equipment setting	5 V/div, 10 ms/div
Condition	After warm-up, during idling

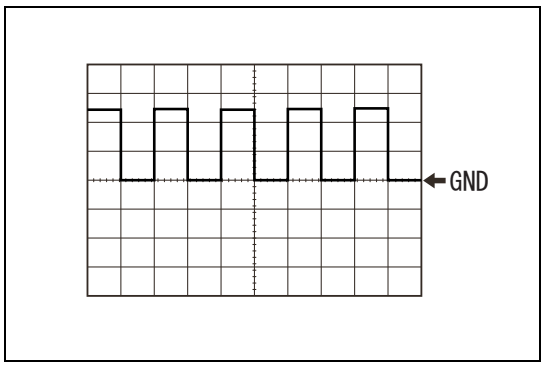

(8) Waveform 8

Item	Contents
Measuring terminal	TACH ←→E01
Equipment setting	5 V/div, 10 ms/div
Condition	Hold at engine speed of 1500 r/min.

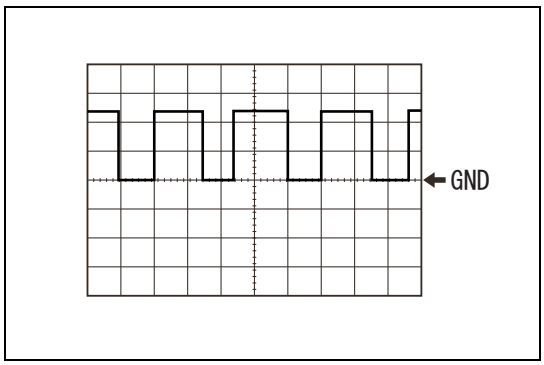

(9) Waveform 9

Item	Contents
Measuring terminal	FPC ←→E01
Equipment setting	5 V/div, 5 ms/div
Condition	IG ON

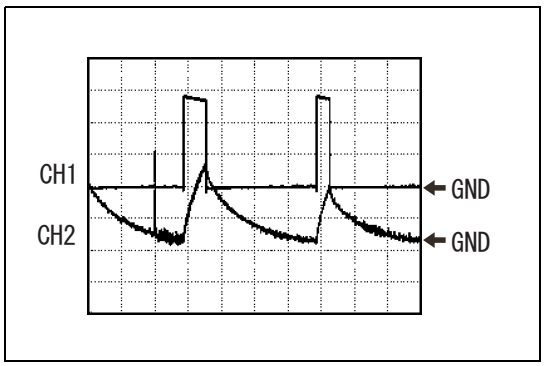

(10) Waveform 10

Item	Contents
Measuring terminal	CH1: M+ ←→E01 CH2: M- ←→E01
Equipment setting	CH1: 5 V/div, 500 µs/div CH2: 200 mV/div, 500 µs/div
Condition	After warm-up, during idling

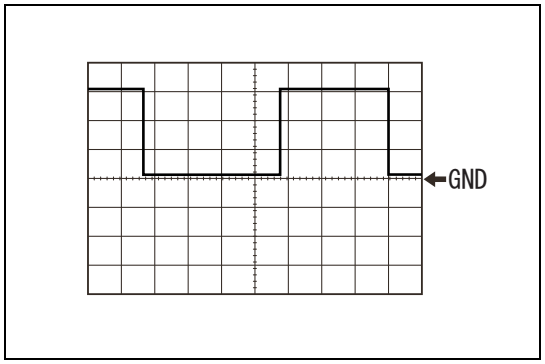

(11) Waveform 11

Item	Contents
Measuring terminal	OC1 ←→E01 OC2 ←→E01 OE1 ←→E01 OE2 ←→E01
Equipment setting	5 V/div, 1 ms/div
Condition	After warm-up, during idling

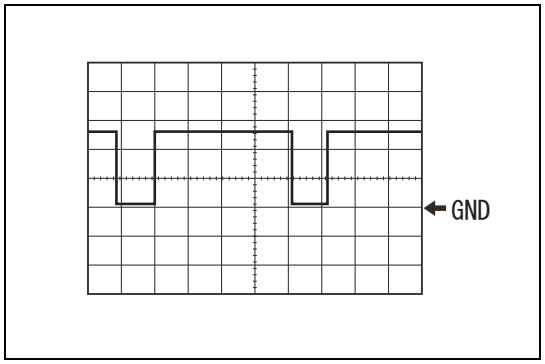

(12) Waveform 12

Item	Contents
Measuring terminal	HT1B ←→E01
Equipment setting	5 V/div, 50 ms/div
Condition	While engine is idling before warming up the oxygen sensor

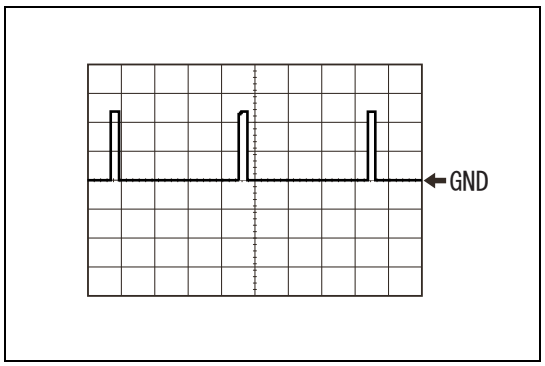

(13) Waveform 13

Item	Contents
Measuring terminal	IGT1 ←→E01 IGT2 ←→E01 IGT3 ←→E01 IGT4 ←→E01
Equipment setting	2 V/div, 20 ms/div
Condition	After warm-up, during idling

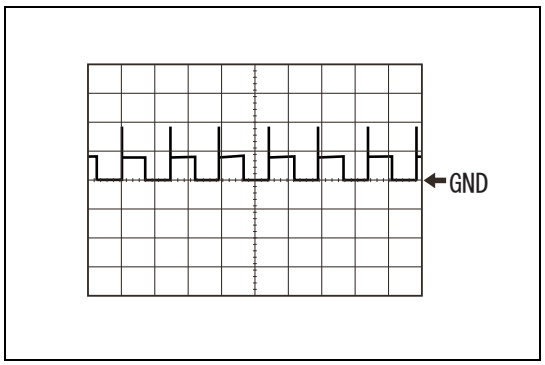

(14) Waveform 14

Item	Contents
Measuring terminal	PRG ←→E01
Equipment setting	10 V/div, 2 s/div
Condition	After warming up, while engine idling, during purge control, or IG ON

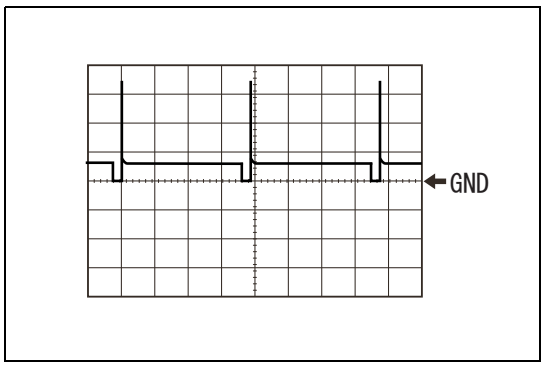

(15) Waveform 15

Item	Contents
Measuring terminal	#10 ←→E01 #20 ←→E01 #30 ←→E01 #40 ←→E01
Equipment setting	20 V/div, 20 ms/div
Condition	After warm-up, during idling

Data monitor / active test

1. Data monitor

   NOTE:

   By reading the data display with SSM4, the values and conditions for the switch, sensor and actuator can be checked without removing the parts. When performing troubleshooting, reading the information indicated on the data display reduces the diagnosis time.

   (1) Warm up the engine.
   (2) Turn the A/C switch to OFF.
   (3) Turn the ignition switch to OFF.
   (4) Connect the SSM4 to the DLC3.
   (5) Start the engine.
   (6) Check the data monitor using the SSM4.
   (7) Read the data display.

CAUTION:

The normal value described below are just the reference. Therefore, do not perform inspection based on this value.

- List of normal sampling

Item	Display	Reference (During idling)	Unit
Calculated engine load value	[Calculated load value]	24%	%
Absolute load value	[Absolute Load Value]	15%	%
Intake air amount	[Mass Air Flow]	1.99g/s	g/s or lb/m
Intake manifold absolute pressure	[Mani. Absolute Pressure]	30 kPa	kPa, mmHg, inHg, or psig
Intake air temperature signal	[Intake Air Temp.]	33°C	°C or °F
Atmospheric pressure signal	[Atmosphere Pressure]	101 kPa	kPa, mmHg, inHg, or psig
Engine coolant temperature signal	[Coolant Temp.]	91°C	°C or °F
Engine speed signal	[Engine Speed]	700 r/min	r/min
Vehicle speed signal	[Vehicle Speed]	0 km/h {0 MPH}	km/h or MPH
Elapsed time after starting the engine	[Time Since Engine Start]	-	s
Identification value of throttle opening angle on ECM side	[Relative Throttle Pos.]	2%	%
Opening angle of throttle position sensor No. 1	[Throttle Opening Angle]	13%	%
Opening angle of throttle position sensor No. 2	[Absolute Throttle Pos.#2]	30%	%
Opening angle of accelerator pedal position sensor No. 1	[Accelerator Pedal Pos.#1]	14%	%
Opening angle of accelerator pedal position sensor No. 2	[Accelerator Pedal Pos.#2]	14%	%
Throttle target opening angle	[Target Throttle Opening Angle]	0%	%
Number of warm-ups after DTC clearance	[Number of warm-ups]	-	Times
Driving distance after DTC clearance	[Meter since DTC cleared]	-	km
Elapsed time after DTC clearance	[Time since DTC cleared]	-	min
ECM power supply voltage	[Control module voltage]	14.226V	V
Operation status of air/fuel ratio F/B (feedback) control	[Fuel system for Bank 1]	CLOSE in normal status	-
Short-term FT controlled by front oxygen (A/F) sensor	[Short term fuel trim B1]	-0.78%	%
Long-term FT controlled by front oxygen (A/F) sensor	[Long term fuel trim B1]	-3.91%	%
#1 cylinder ignition timing	[Ignition timing adv. #1]	12.0°	°
Evaporative purge	[Commanded Evap Purge]	0%	%
Target value for air/fuel ratio control	[Target Equivalence Ratio]	0.997	-
A/F lambda signal (bank 1, sensor 1)	[A/F Sensor #11]	0.997	-
A/F sensor output signal (bank1, senor 1)	[A/F Sensor #11]	2.191V	V
A/F sensor current value (bank1, senor 1)	[A/F Sensor #11]	0.00mA	mA
Oxygen sensor output voltage (bank 1, sensor 2)	[Oxygen sensor #12]	0.775V	V
Short-term FT controlled by front oxygen (A/F) sensor (bank 1, sensor 2)	[Short term fuel trim #12]	0.00%	%
Long-term sub FT controlled by front oxygen (A/F) sensor	[Long Term O2 Fuel Trim #1]	0.00%	%
Evaporative system pressure	[Absolute Evap Sys. Pressure]	101.610 kPa	kPa
Catalyst temperature (bank 1)	[Catalyst Temperature #11]	257°C	°C or °F
Status of engine warning light	[MIL Status]	OFF	-

ES

Item	Display	Reference (During idling)	Unit
Number of DTC	[Number of Diagnostic Code(s):]	0	Record
Monitoring test of comprehensive component	[Component monitoring(Supp)]	With support	-
Monitoring test of fuel system	[Fuel system monitoring(Supp)]	With support	-
Monitoring test of misfire	[Misfire monitoring(Supp)]	With support	-
EGR system test	[EGR system(Supp)]	With support	-
Oxygen sensor heater test	[O2 Heater Diagnosis(Supp)]	With support	-
Oxygen sensor test	[Oxygen sensor(Supp)]	With support	-
Refrigerant test of air conditioner system	[A/C system refrigerant(Supp)]	Without support	-
Secondary air system test	[Secondary air system(Supp)]	Without support	-
Evaporative emission purge control system test	[Evaporative purge system(Supp)]	Without support	-
Heater catalyst test	[Heated catalyst(Supp)]	Without support	-
Catalyst test	[Catalyst Diagnosis(Supp)]	With support	-
EGR system test	[EGR system(Rdy)]	YES/N/A	-
Oxygen sensor heater test	[O2 Heater Diagnosis(Rdy)]	YES/N/A	-
Oxygen sensor test	[Oxygen sensor(Rdy)]	YES/N/A	-
Refrigerant test of air conditioner system	[A/C system refrigerant(Rdy)]	YES/N/A	-
Secondary air system test	[Secondary air system(Rdy)]	YES/N/A	-
Evaporative emission purge control system test	[Evaporative purge system(Rdy)]	YES/N/A	-
Heater catalyst test	[Heated catalyst(Rdy)]	YES/N/A	-
Catalyst test	[Catalyst Diagnosis(Rdy)]	YES/N/A	-
Oxygen sensor position (bank 2, sensor 4)	[Oxygen sensor #24]	Without support	-
Oxygen sensor position (bank 2, sensor 3)	[Oxygen sensor #23]	Without support	-
Oxygen sensor position (bank 2, sensor 2)	[Oxygen sensor #22]	Without support	-
Oxygen sensor position (bank 2, sensor 1)	[Oxygen sensor #21]	Without support	-
Oxygen sensor position (bank 1, sensor 4)	[Oxygen sensor #14]	Without support	-
Oxygen sensor position (bank 1, sensor 3)	[Oxygen sensor #13]	Without support	-
Oxygen sensor position (bank 1, sensor 2)	[Oxygen sensor #12]	Support	-
Oxygen sensor position (bank 1, sensor 1)	[Oxygen sensor #11]	Support	-
On-board diagnostics system	[OBD System]	OBD/OBD2	-
Driving distance after engine warning light illumination	[Lighted MI lamp history]	0km	km
Monitoring test of comprehensive component	[Component monitoring(Comp)]	NO	-
Monitoring test of fuel system	[Fuel system monitoring(Comp)]	YES/N/A	-
Monitoring test of misfire	[Misfire monitoring(Comp)]	YES/N/A	-
Monitoring test of comprehensive component	[Component monitoring(Enable)]	YES	-
Monitoring test of fuel system	[Fuel system monitoring(Enable)]	YES	-
Monitoring test of misfire	[Misfire monitoring(Enable)]	YES	-
EGR system test	[EGR system(Enable)]	YES	-
Oxygen sensor heater test	[O2 Heater Diagnosis(Enable)]	YES	-
Oxygen sensor test	[Oxygen sensor(Enable)]	YES	-
Refrigerant test of air conditioner system	[A/C system refrigerant(Enable)]	NO/N/A	-
Secondary air system test	[Secondary air system(Enable)]	NO/N/A	-
Evaporative emission purge control system test	[Evaporative purge system(Enable)]	NO/N/A	-
Heater catalyst test	[Heated catalyst(Enable)]	NO/N/A	-
Catalyst test	[Catalyst Diagnosis(Enable)]	YES	-
EGR system test	[EGR system(Comp)]	YES/N/A	-
Oxygen sensor heater test	[O2 Heater Diagnosis(Comp)]	YES/N/A	-
Oxygen sensor test	[Oxygen sensor(Comp)]	NO	-
Refrigerant test of air conditioner system	[A/C system refrigerant(Comp)]	YES/N/A	-
Secondary air system test	[Secondary air system(Comp)]	YES/N/A	-
Evaporative emission purge control system test	[Evaporative purge system(Comp)]	YES/N/A	-
Heater catalyst test	[Heated catalyst(Comp)]	YES/N/A	-
Catalyst test	[Catalyst Diagnosis(Comp)]	NO	-
Engine running time during engine warning light illumination	[Time while MIL lighted]	0min	min

Item	Display	Reference (During idling)	Unit
Vehicle speed for cruise control	[Cruise speed]	0 km/h {0 MPH}	km/h or MPH
Set speed for cruise control	[Memorized Cruise Speed]	0 km/h {0 MPH}	km/h or MPH
Cruise control request torque	[Cruise demand torque]	0Nm	Nm
Cruise control signal	[Cruise control]	OFF	ON/OFF
Cruise control main switch signal	[Main Switch]	OFF	ON/OFF
Cruise control main switch filter value signal	[Main Switch After Filter]	OFF	ON/OFF
Cruise control main switch identification value	[Main Switch Operation Value]	OFF	ON/OFF
Brake switch 1 signal	[Brake Switch 1]	OFF	ON/OFF
Brake switch 2 signal	[Brake Switch 2]	OFF	ON/OFF
RESUME/ACCEL switch signal	[RESUME/ACCEL Switch]	OFF	ON/OFF
SET/COAST Switch	[SET/COAST Switch]	OFF	ON/OFF
Cruise control cancel switch signal	[CC Cancel SW]	OFF	ON/OFF
Illumination request status of engine warning light (AT model)	[MIL Request Status]	Without illumination request	-
Gear position signal (AT model)	[Gear Signal]	0	-
Turbine speed (AT model)	[AT turbine speed]	700 r/min	r/min
Lock-up status output (AT model)	[AT Lock up status]	OFF	-
Fuel level sensor resistance	[Fuel level resistance]	-	Ω
Rear defogger switch signal	[Rear Defogger SW]	OFF	-
Blower fan switch signal	[Blower Fan SW]	OFF	-
Headlight switch signal	[Light Switch]	OFF	-
Front wiper switch signal	[Wiper Switch]	OFF	-
A/F sensor position information (bank 2, sensor 4)	[A/F sensor position information Bank2_Sensor4]	Without support	-
A/F sensor position information (bank 2, sensor 3)	[A/F sensor position information Bank2_Sensor3]	Without support	-
A/F sensor position information (bank 2, sensor 2)	[A/F sensor position information Bank2_Sensor2]	Without support	-
A/F sensor position information (bank 2, sensor 1)	[A/F sensor position information Bank2_Sensor1]	Without support	-
A/F sensor position information (bank 1, sensor 4)	[A/F sensor position information Bank1_Sensor4]	Without support	-
A/F sensor position information (bank 1, sensor 3)	[A/F sensor position information Bank1_Sensor3]	Without support	-
A/F sensor position information (bank 1, sensor 2)	[A/F sensor position information Bank1_Sensor2]	Without support	-
A/F sensor position information (bank 1, sensor 1)	[A/F sensor position information Bank1_Sensor1]	With support	-
Stop light switch signal	[Stop Light Switch]	OFF	-
Brake switch signal	[Brake Switch]	OFF	-
Cranking status generated by starter	[Starter Switch]	OFF	-
Shift position P range signal (AT model)	[Shift SW Status (P Range)]	ON	-
Shift position R range signal (AT model)	[Shift SW Status (R Range)]	OFF	-
Shift position N range signal (AT model)	[Shift SW Status (N Range)]	OFF	-
Shift position D range signal (AT model)	[Shift SW Status (D Range)]	OFF	-
Sport mode selector switch signal (AT model)	[Manual SW]	OFF	-
Shift lever position P or N range	[Neutral Position Switch]	Neutral	-
Clutch switch signal (MT model)	[Clutch Switch]	OFF	-
Air conditioner middle pressure switch signal	[A/C Mid Pressure Switch]	OFF	-
A/C switch signal	[A/C Switch]	OFF	-
Delivery (test) mode terminal	[Delivery Mode Connector]	OFF	-
Ignition switch signal	[Ignition Switch]	ON	ON/OFF
A/F sensor admittance (bank 1)	[A/F Sensor Admittance B1]	0.02	1/Ω
Air / fuel ratio (bank 1, sensor 1)	[Air fuel ratio B1S1]	1.0	-
A/F sensor learned value (PFI)	[A/F Learn Value B1(PFI)]	0%	%
A/F sensor resistance (bank 1, sensor 1)	[A/F Sensor Impedance B1]	49.0Ω	Ω

Item	Display	Reference (During idling)	Unit
Engine coolant temperature signal at startup	[Initial Engine Coolant Temp]	-	°C or °F
Intake air temperature signal at startup	[Initial Intake Air Temp]	-	°C or °F
Correction learning value for knock control	[Knock Correct Learn Value]	0°CA	°CA
Control value for knock control	[Knock Feedback Value]	0°CA	°CA
Purge density learning value	[Purge Density Learn Value]	0%	%
Percentage of purge introduction in relation to the intake air amount	[Evap Purge Flow]	0%	%
Soak time	[Soak Time]	0min	min
Driving distance after battery reconnection	[Distance Battery Cable Disconnect]	-	km
Fuel cutoff operation status	[Fuel Cut Condition]	OFF	-
Accelerator pedal is fully closed.	[Idle Switch]	ON	-
Fuel cutoff operation status with idle ON	[Idle Fuel Cut]	OFF	-
Fuel cutoff operation status under low-load condition	[FC TAU]	OFF	-
Brake override control status	[Accel/Brake Pedal Control Status]	OFF	-
Engine oil temperature at engine start	[Initial Engine Oil Temp]	-	°C or °F
Request signal for AT coordinated retard angle (AT model)	[Retard Signal from AT]	None	-
Request signal for AT coordinated fuel cutoff (AT model)	[Fuel Cut signal from AT]	None	-
Request signal for AT coordinated torque down prohibition output (AT model)	[Stop torque decrease with AT]	Permitted	-
Torque down request for vehicle dynamics control (VDC)	[Request Torque Down VDC]	None	-
Torque up request for vehicle dynamics control (VDC)	[Request torque increase with VDC]	None	-
Torque down prohibition output for vehicle dynamics control (VDC)	[Ban of Torque Down]	Permitted	-
Torque up prohibition output for vehicle dynamics control (VDC)	[Stop torque increase with VDC]	Permitted	-
A/C magnetic clutch operation status	[A/C Compressor Signal]	OFF	-
TC terminal	[TC Terminal]	OFF	-
ELCM vacuum pump drive signal	[ELCM pump]	OFF	-
ELCM switching valve drive signal	[ELCM switching valve]	OFF	-
ACC relay operation status	[ACC Relay Monitor]	OFF	-
Starter cut relay operation status	[Starter cut relay]	ON	-
Purge VSV drive duty cycle	[EVAP (Purge) VSV]	0%	%
A/F sensor heater duty ratio	[A/F Heater Duty]	15%	%
Oxygen sensor heater duty ratio	[O2 Sensor Heater Duty]	28%	%
Oxygen sensor heater drive status (bank 1, sensor 1)	[O2 Heater B1S1]	ON	-
Oxygen sensor heater drive status (bank 1, sensor 2)	[O2 Heater B1S2]	ON	-
Radiator fan relay 1 operation status	[Radiator Fan Relay #1]	OFF	-
Radiator fan relay 2 operation status	[Radiator Fan Relay #2]	OFF	-
Fuel pump control duty ratio	[Fuel Pump Duty]	66%	%
Accumulative value for the last 10 injections of the cylinder #1	[Injection Volume (Cylinder1)]	0.100ml	ml
Direct injection time for cylinder #1 (The last injection period)	[Final Direct injection time (Cylinder 1)]	1362µs	µs
Injection time for port #1 (The last injection period)	[Final port injection time (Cylinder 1)]	0µs	µs
#1 cylinder main injector injection timing	[Direct injection timing (Cylinder 1)]	320.0°CA	°CA
High pressure fuel pump discharge rate (pump 1)	[Requested quantity of high-pressure fuel pump discharge (Pump 1)]	0.011ml	ml
Target fuel pressure of high pressure fuel pump	[Target Fuel Pressure(High)]	4004 kPa	kPa
Injection method display	[Injection Mode(D4-S)]	2	-
Estimated fuel dilution amount	[Fuel dilution quantity estimated value]	-	ml
Output voltage for throttle position sensor No. 1 opener opening angle	[Throttle Sensor Open Pos #1]	0.86V	V
Output voltage for throttle position sensor No. 2 opener opening angle	[Throttle Sensor Open Pos #2]	0.84V	V
Full-close learning value of accelerator pedal position sensor No. 1	[Accel Fully Close Learn #1]	5°	°
Full-close learning value of accelerator pedal position sensor No. 2	[Accel Fully Close Learn #2]	5°	°

Item	Display	Reference (During idling)	Unit
Throttle opening angle command voltage	[Throttle Position Command]	0.64V	V
Accelerator opening ratio	[Accel. Opening Angle]	0%	%
Electronic control throttle voltage	[(+)BM Voltage]	14V	V
Output voltage of accelerator position sensor No. 1	[Accelerator Sensor No1 Voltage]	0.68V	V
Output voltage of accelerator position sensor No. 2	[Accelerator Sensor No2 Voltage]	0.68V	V
Output voltage of throttle position sensor No. 1	[Throttle sensor No1 Voltage]	0.64V	V
Output voltage of throttle position sensor No. 2	[Throttle sensor No2 Voltage]	1.48V	V
Throttle valve request opening angle	[Throttle Require Position]	0.66V	V
Throttle sensor full-close learning value	[Throttle Fully Close Learn]	0.57V	V
Throttle motor open-side duty ratio	[Throttle Motor Duty (Open)]	0%	%
Throttle motor close-side duty ratio	[Throttle Motor Duty (Close)]	14%	%
Status of voltage supply to electronic control throttle motor	[Motor Duty Operation Status]	ON	-
ST1 input status	[ST1 Input Status]	OFF	-
Accelerator position sensor idle flag	[Idle switch (APS)]	ON	-
Throttle position sensor idle flag	[Idle switch (TPS)]	ON	-
Throttle motor power supply relay operation	[Motor Power Supply Relay]	ON	-
Applicable voltage used for non-forced drive of alternator	[Alt Voltage - Non Active Test]	14.5 V	V
Applicable voltage used for forced drive of alternator	[Alt Voltage - Active Test]	0.0V	V
Number of cleaning executions for VVT self-recovery	[Number of Cleaning Executions for VVT Self-recovery]	-	Times
Number of cleaning executions for Ex VVT self-recovery	[Number of Cleaning Executions for Ex VVT Self-recovery]	-	Times
Alternator duty ratio	[ALT Duty]	67%	%
Alternator control mode	[Alternator control mode]	0	-
Intake VVT hold duty ratio learning value (bank 1)	[VVT Aim Angle #1]	61.1%	%
Intake oil control solenoid duty ratio (bank 1)	[VVT OCV Duty #1]	54.5%	%
Intake VVT actual displacement angle (bank 1)	[VVT Change Angle #1]	0°FR	°FR
Intake VVT hold duty ratio learning value (bank 2)	[VVT Aim Angle #2]	60.6%	%
Intake oil control solenoid duty ratio (bank 2)	[VVT OCV Duty #2]	54.8%	%
Intake VVT actual displacement angle (bank 2)	[VVT Change Angle #2]	0°FR	°FR
Exhaust VVT hold duty ratio learning value (bank 1)	[VVT Ex Hold Lrn Val #1]	57.8%	%
Exhaust oil control solenoid duty ratio (bank 1)	[VVT Ex OCV Duty #1]	46.7%	%
Exhaust VVT actual displacement angle (bank 1)	[VVT Ex Change Angle #1]	0°FR	°FR
Exhaust VVT hold duty ratio learning value (bank 2)	[VVT Ex Hold Lrn Val #2]	58.3%	%
Exhaust oil control solenoid duty ratio (bank 2)	[VVT Ex OCV Duty #2]	47.9%	%
Exhaust VVT actual displacement angle (bank 2)	[VVT Ex Change Angle #2]	0°FR	°FR
Intake VVT target displacement angle (bank 1)	[VVT Target Change Angle #1]	0°FR	°FR
Intake VVT target displacement angle (bank 2)	[VVT Target Change Angle #2]	0°FR	°FR
Exhaust VVT target displacement angle (bank 1)	[VVT Ex Target Change Angle #1]	0°FR	°FR
Exhaust VVT target displacement angle (bank 2)	[VVT Ex Target Change Angle #2]	0°FR	°FR
Intake oil control solenoid current (bank 1)	[OCV Current R]	0.773A	A
Intake oil control solenoid current (bank 2)	[OCV Current L]	0.766A	A
Exhaust oil control solenoid current (bank 1)	[Exh. OCV Current R]	0.641A	A
Exhaust oil control solenoid current (bank 2)	[Exh. OCV Current L]	0.641A	A
Cylinder #1 misfire counter	[Cylinder #1 Misfire Count]	0 time	Times
Cylinder #2 misfire counter	[Cylinder #2 Misfire Count]	0 time	Times
Cylinder #3 misfire counter	[Cylinder #3 Misfire Count]	0 time	Times
Cylinder #4 misfire counter	[Cylinder #4 Misfire Count]	0 time	Times
Period of time from the starter ON to the engine speed reaching 400 r/min.	[Engine Starting Time]	0 ms	ms
Engine speed upon starter off	[Engine Speed (Starter Off)]	1429 r/min	r/min
The number of ON for starter after IG OFF →IG ON.	[Starter Count]	1 time	Times
Driving distance in the previous operation	[Run Dist of Previous Trip]	-	km
Engine coolant temperature in the previous operation	[Previous Trip Coolant Temp]	-	°C or °F

Item	Display	Reference (During idling)	Unit
Intake air temperature in the previous operation	[Previous Trip Intake Temp]	-	°C or °F
Engine oil temperature	[Oil Temperature]	89°C	°C or °F
Engine oil temperature in the previous operation	[Previous Trip Eng Oil Temp]	-	°C or °F
Ambient temperature	[Ambient Temperature]	-	°C or °F
Ambient temperature in the previous operation	[Previous Trip Ambient Temp]	-	°C or °F
Throttle opening angle	[Throttle Opening Angle]	0°	°
ISC flow rate calculated from information of each sensor	[ISC Flow]	1.79g/s	g/s
Throttle opening angle requested from ISC	[ISC Position]	2°	°
ISC feedback correction amount	[ISC Feedback Value]	0.01g/s	g/s
ISC flow rate learning value	[ISC Learning Value]	0.08g/s	g/s
ISC electric load correction amount	[Electric Load Feedback Val]	0.00g/s	g/s
ISC air conditioner load correction amount	[Air Conditioner FB Val]	0.00g/s	g/s
Low revolution record after engine start	[Low Rev for Eng Start]	OFF	-
Start time inferior record	[Starting time of engine failure history]	OFF	-
Immobilizer fuel cutoff status	[Immobilizer Fuel Cut]	OFF	-
Immobilizer fuel cutoff history	[Immobilizer Fuel Cut History]	OFF	-
Correction amount for idle stabilization advance angle of #1 cylinder	[Idle Spark Advn Ctrl #1]	0°CA	°CA
Correction amount for idle stabilization advance angle of #2 cylinder	[Idle Spark Advn Ctrl #2]	0°CA	°CA
Correction amount for idle stabilization advance angle of #3 cylinder	[Idle Spark Advn Ctrl #3]	0°CA	°CA
Correction amount for idle stabilization advance angle of #4 cylinder	[Idle Spark Advn Ctrl #4]	0°CA	°CA
Deposit loss air amount	[Deposit Loss Flow]	0 g/s	g/s
Elapsed time after high speed revolution judgment	[Fuel Cut Elps Time]	0 s	s
Engine speed when fuel cutoff is performed at the cylinder #1	[Engine Speed of Cyl #1]	0 r/min	r/min
Engine speed when fuel cutoff is performed at the cylinder #2	[Engine Speed of Cyl #2]	0 r/min	r/min
Engine speed when fuel cutoff is performed at the cylinder #3	[Engine Speed of Cyl #3]	0 r/min	r/min
Engine speed when fuel cutoff is performed at the cylinder #4	[Engine Speed of Cyl #4]	0 r/min	r/min
Average engine speed in all cylinders	[Av Engine Speed of All Cyl]	0 r/min	r/min
Air fuel ratio learning value (bank 1) for idle area (during direct injection).	[A/F Learn Value Idle #1]	0%	%
Air fuel ratio learning value (bank 1) for low-load area (during direct injection).	[A/F Learn Value Low #1]	0%	%
Air fuel ratio learning value (bank 1) for mid-load area (during direct injection).	[A/F Learn Value Mid1 #1]	0%	%
Air fuel ratio learning value (bank 1) for high-load area (during direct injection).	[A/F Learn Value High #1]	0%	%
Air fuel ratio learning value (bank 1) in the idle area (controlled injection).	[A/F Learn Value Idle #1(Dual)]	0%	%
Air fuel ratio learning value (bank 1) in the low-load area (controlled injection).	[A/F Learn Value Low #1(Dual)]	0%	%
Air fuel ratio learning value (bank 1) in the mid-load area (controlled injection).	[A/F Learn Value Mid1 #1(Dual)]	0%	%
Air fuel ratio learning value (bank 1) in the high-load area (controlled injection).	[A/F Learn Value High #1(Dual)]	0%	%
Last 5 digits of ECM part number	[Last 5 Digits ECU Part Number]	-	-
The number of DTCs for which 40 warm-up cycles do not continue in the normal status.	[# Codes(Include History)]	0	Record
Number of all diagnostic codes	[Number Of ALL DTCs]	0	Record
The number of IG ON times	[Trip Count]	-	trip
Count	[Count]	Normal count	-
Elapsed time after IG ON	[Time Count]	-	ms
Ambient temperature sensor value	[Ambient Temperature Sensor Signal]	-	°C
Target fuel pressure 1	[Commanded Fuel Rail Pressure A]	4000	kPa

Item	Display	Reference (During idling)	Unit
Target fuel pressure 2	[Commanded Fuel Rail Pressure B]	4000	kPa
Actual fuel pressure 1	[Fuel Rail Pressure A]	4000	KPa
Actual fuel pressure 2	[Fuel Rail Pressure B]	4000	kPa
Usage rate of the fuel system A in bank 1	[Fuel System A Use Percentage (B1)]	100	%
Usage rate of the fuel system B in bank 1	[Fuel System B Use Percentage (B1)]	0	%
O2 sensor impedance value	[O2 Sensor Impedance]	40	Ω
Alternator mechanical failure	[Alternator Mechanical Error Status]	OFF	ON/OFF
Alternator electrical failure	[Alternator Electrical Output Error Status]	OFF	ON/OFF
Alternator high temperature failure	[Alternator High Temperature Error Status]	OFF	ON/OFF
Alternator communication failure	[Alternator Communication Error Status]	OFF	ON/OFF
Regulator temperature	[Regulator Temperature]	50	°C
Battery charging and discharging current	[Battery Charge/Discharge Current]	21.742	A
Battery terminal voltage	[Battery Terminal Voltage]	14.292	V
Estimated battery fluid temperature	[Estimated Battery Temperature]	21	°C
Remaining battery capacity	[Remaining battery capacity]	95.5	%
Charging control detailed information 1	[Alternator control check 1]	96	-
Charging control detailed information 2	[Alternator control check 2]	95.5	-
Charging control detailed information 3	[Alternator control check 3]	7.5	-
Charging control detailed information 4	[Alternator control check 4]	7.6	-
Charging control detailed information 5	[Alternator control check 5]	100	-
Charging control detailed information 6	[Alternator control check 6]	1	-
Charging control detailed information 7	[Alternator control check 7]	14.295	-
Charging control detailed information 8	[Alternator control check 8]	0	-
Charging control detailed information 9	[Alternator control check 9]	0	-
Charging control detailed information 10	[Alternator control check 10]	0	-

- List of freeze frame data

Item	Display	Unit
Calculated engine load value	[Calculated load value]	%
Absolute load value	[Absolute Load Value]	%
Intake air amount	[Mass Air Flow]	g/s or lb/m
Intake manifold absolute pressure	[Mani. Absolute Pressure]	kPa, mmHg, inHg, or psig
Intake air temperature signal	[Intake Air Temp.]	°C or °F
Atmospheric pressure signal	[Atmosphere Pressure]	kPa, mmHg, inHg, or psig
Engine coolant temperature signal	[Coolant Temp.]	°C or °F
Engine speed signal	[Engine Speed]	r/min
Vehicle speed signal	[Vehicle Speed]	km/h or MPH
Elapsed time after starting the engine	[Time Since Engine Start]	s
Identification value of throttle opening angle on ECM side	[Relative Throttle Pos.]	%
Opening angle of throttle position sensor No. 1	[Throttle Opening Angle]	%
Opening angle of throttle position sensor No. 2	[Absolute Throttle Pos.#2]	%
Opening angle of accelerator pedal position sensor No. 1	[Accelerator Pedal Pos.#1]	%
Opening angle of accelerator pedal position sensor No. 2	[Accelerator Pedal Pos.#2]	%
Throttle target opening angle	[Target Throttle Opening Angle]	%
Number of warm-ups after DTC clearance	[Number of warm-ups]	Times
Driving distance after DTC clearance	[Meter since DTC cleared]	km
Elapsed time after DTC clearance	[Time since DTC cleared]	min
ECM power supply voltage	[Control module voltage]	V
DTC for status information of malfunction	[DTC that caused required Freeze Frame data storage]	-
Operation status of air/fuel ratio F/B (feedback) control	[Fuel system for Bank 1]	-
Short-term FT controlled by front oxygen (A/F) sensor	[Short term fuel trim B1]	%
Long-term FT controlled by front oxygen (A/F) sensor	[Long term fuel trim B1]	%
#1 cylinder ignition timing	[Ignition timing adv. #1]	°

Item	Display	Unit
Evaporative purge	[Commanded Evap Purge]	%
Target value for air/fuel ratio control	[Target Equivalence Ratio]	-
A/F lambda signal (bank 1, sensor 1)	[A/F Sensor #11]	-
A/F sensor output signal (bank1, senor 1)	[A/F Sensor #11]	V
A/F sensor current value (bank1, senor 1)	[A/F Sensor #11]	mA
Oxygen sensor output voltage (bank 1, sensor 2)	[Oxygen sensor #12]	V
Short-term FT controlled by front oxygen (A/F) sensor (bank 1, sensor 2)	[Short term fuel trim #12]	%
Long-term sub FT controlled by front oxygen (A/F) sensor	[Long Term O2 Fuel Trim #1]	%
Evaporative system pressure	[Absolute Evap Sys. Pressure]	kPa
Catalyst temperature (bank 1)	[Catalyst Temperature #11]	°C or °F
Vehicle speed for cruise control	[Cruise speed]	km/h or MPH
Set speed for cruise control	[Memorized Cruise Speed]	km/h or MPH
Cruise control request torque	[Cruise demand torque]	Nm
Cruise control signal	[Cruise control]	ON/OFF
Cruise control main switch signal	[Main Switch]	ON/OFF
Cruise control main switch filter value signal	[Main Switch After Filter]	ON/OFF
Cruise control main switch identification value	[Main Switch Operation Value]	ON/OFF
Brake switch 1 signal	[Brake Switch 1]	ON/OFF
Brake switch 2 signal	[Brake Switch 2]	ON/OFF
RESUME/ACCEL switch signal	[RESUME/ACCEL Switch]	ON/OFF
SET/COAST Switch	[SET/COAST Switch]	ON/OFF
Cruise control cancel switch signal	[CC Cancel SW]	ON/OFF
Illumination request status of engine warning light (AT model)	[MIL Request Status]	-
Gear position signal (AT model)	[Gear Signal]	-
Turbine speed (AT model)	[AT turbine speed]	r/min
Lock-up status output (AT model)	[AT Lock up status]	-
Fuel level sensor resistance	[Fuel level resistance]	Ω
Rear defogger switch signal	[Rear Defogger SW]	-
Blower fan switch signal	[Blower Fan SW]	-
Headlight switch signal	[Light Switch]	-
Front wiper switch signal	[Wiper Switch]	-
Stop light switch signal	[Stop Light Switch]	-
Brake switch signal	[Brake Switch]	-
Cranking status generated by starter	[Starter Switch]	-
Shift position P range signal (AT model)	[Shift SW Status (P Range)]	-
Shift position R range signal (AT model)	[Shift SW Status (R Range)]	-
Shift position N range signal (AT model)	[Shift SW Status (N Range)]	-
Shift position D range signal (AT model)	[Shift SW Status (D Range)]	-
Sport mode selector switch signal (AT model)	[Manual SW]	-
Shift lever position P or N range	[Neutral Position Switch]	-
Clutch switch signal (MT model)	[Clutch Switch]	-
Air conditioner middle pressure switch signal	[A/C Mid Pressure Switch]	-
A/C switch signal	[A/C Switch]	-
Delivery (test) mode terminal	[Delivery Mode Connector]	-
Ignition switch signal	[Ignition Switch]	ON/OFF
Stop light switch signal (history)	[Stop Light Switch History]	-
Brake switch signal (history)	[Brake Switch History]	-
STA SW signal (history)	[STA SW History]	-
Starter switch signal (history)	[Starter Switch History]	-
Neutral position switch signal (history)	[Neutral Position Switch History]	-
Clutch switch signal (history) (MT model)	[Clutch Switch History]	-
Air conditioner middle pressure switch signal (history)	[A/C Mid Pressure Switch History]	-
Air conditioner switch signal (history)	[A/C Switch History]	-

Item	Display	Unit
Delivery (test) mode terminal (history)	[Delivery Mode Connector History]	-
Ignition switch signal (history)	[Ignition Switch History]	-
A/F sensor admittance (bank 1)	[A/F Sensor Admittance B1]	1/Ω
Air / fuel ratio (bank 1, sensor 1)	[Air fuel ratio B1S1]	-
A/F sensor learned value (PFI)	[A/F Learn Value B1(PFI)]	%
A/F sensor resistance (bank 1, sensor 1)	[A/F Sensor Impedance B1]	Ω
Engine coolant temperature signal at startup	[Initial Engine Coolant Temp]	°C or °F
Intake air temperature signal at startup	[Initial Intake Air Temp]	°C or °F
Correction learning value for knock control	[Knock Correct Learn Value]	°CA
Control value for knock control	[Knock Feedback Value]	°CA
Purge density learning value	[Purge Density Learn Value]	%
Percentage of purge introduction in relation to the intake air amount	[Evap Purge Flow]	%
Soak time	[Soak Time]	min
Driving distance after battery reconnection	[Distance Battery Cable Disconnect]	km
Fuel cutoff operation status	[Fuel Cut Condition]	-
Accelerator pedal is fully closed.	[Idle Switch]	-
Fuel cutoff operation status with idle ON	[Idle Fuel Cut]	-
Fuel cutoff operation status under low-load condition	[FC TAU]	-
Brake override control status	[Accel/Brake Pedal Control Status]	-
Engine oil temperature at engine start	[Initial Engine Oil Temp]	°C or °F
Request signal for AT coordinated retard angle (AT model)	[Retard Signal from AT]	-
Request signal for AT coordinated fuel cutoff (AT model)	[Fuel Cut signal from AT]	-
Request signal for AT coordinated torque down prohibition output (AT model)	[Stop torque decrease with AT]	-
Torque down request for vehicle dynamics control (VDC)	[Request Torque Down VDC]	-
Torque up request for vehicle dynamics control (VDC)	[Request torque increase with VDC]	-
Torque down prohibition output for vehicle dynamics control (VDC)	[Ban of Torque Down]	-
Torque up prohibition output for vehicle dynamics control (VDC)	[Stop torque increase with VDC]	-
A/C magnetic clutch operation status	[A/C Compressor Signal]	-
TC terminal	[TC Terminal]	-
ELCM vacuum pump drive signal	[ELCM pump]	-
ELCM switching valve drive signal	[ELCM switching valve]	-
ACC relay operation status	[ACC Relay Monitor]	-
Starter cut relay operation status	[Starter cut relay]	-
Purge VSV drive duty cycle	[EVAP (Purge) VSV]	%
A/F sensor heater duty ratio	[A/F Heater Duty]	%
Oxygen sensor heater duty ratio	[O2 Sensor Heater Duty]	%
Oxygen sensor heater drive status (bank 1, sensor 1)	[O2 Heater B1S1]	-
Oxygen sensor heater drive status (bank 1, sensor 2)	[O2 Heater B1S2]	-
Radiator fan relay 1 operation status	[Radiator Fan Relay #1]	-
Radiator fan relay 2 operation status	[Radiator Fan Relay #2]	-
Fuel pump control duty ratio	[Fuel Pump Duty]	%
Accumulative value for the last 10 injections of the cylinder #1	[Injection Volume (Cylinder1)]	ml
Direct injection time for cylinder #1 (The last injection period)	[Final Direct injection time (Cylinder 1)]	μs
Injection time for port #1 (The last injection period)	[Final port injection time (Cylinder 1)]	μs
#1 cylinder main injector injection timing	[Direct injection timing (Cylinder 1)]	°CA
High pressure fuel pump discharge rate (pump 1)	[Requested quantity of high-pressure fuel pump discharge (Pump 1)]	ml
Target fuel pressure of high pressure fuel pump	[Target Fuel Pressure(High)]	kPa
Injection method display	[Injection Mode(D4-S)]	-
Estimated fuel dilution amount	[Fuel dilution quantity estimated value]	ml
Applicable voltage used for non-forced drive of alternator	[Alt Voltage - Non Active Test]	V
Applicable voltage used for forced drive of alternator	[Alt Voltage - Active Test]	V

ES

Item	Display	Unit
Number of cleaning executions for VVT self-recovery	[Number of Cleaning Executions for VVT Self-recovery]	Times
Number of cleaning executions for Ex VVT self-recovery	[Number of Cleaning Executions for Ex VVT Self-recovery]	Times
Alternator duty ratio	[ALT Duty]	%
Alternator control mode	[Alternator control mode]	-
Intake VVT hold duty ratio learning value (bank 1)	[VVT Aim Angle #1]	%
Intake oil control solenoid duty ratio (bank 1)	[VVT OCV Duty #1]	%
Intake VVT actual displacement angle (bank 1)	[VVT Change Angle #1]	°FR
Intake VVT hold duty ratio learning value (bank 2)	[VVT Aim Angle #2]	%
Intake oil control solenoid duty ratio (bank 2)	[VVT OCV Duty #2]	%
Intake VVT actual displacement angle (bank 2)	[VVT Change Angle #2]	°FR
Exhaust VVT hold duty ratio learning value (bank 1)	[VVT Ex Hold Lrn Val #1]	%
Exhaust oil control solenoid duty ratio (bank 1)	[VVT Ex OCV Duty #1]	%
Exhaust VVT actual displacement angle (bank 1)	[VVT Ex Change Angle #1]	°FR
Exhaust VVT hold duty ratio learning value (bank 2)	[VVT Ex Hold Lrn Val #2]	%
Exhaust oil control solenoid duty ratio (bank 2)	[VVT Ex OCV Duty #2]	%
Exhaust VVT actual displacement angle (bank 2)	[VVT Ex Change Angle #2]	°FR
Intake VVT target displacement angle (bank 1)	[VVT Target Change Angle #1]	°FR
Intake VVT target displacement angle (bank 2)	[VVT Target Change Angle #2]	°FR
Exhaust VVT target displacement angle (bank 1)	[VVT Ex Target Change Angle #1]	°FR
Exhaust VVT target displacement angle (bank 2)	[VVT Ex Target Change Angle #2]	°FR
Intake oil control solenoid current (bank 1)	[OCV Current R]	A
Intake oil control solenoid current (bank 2)	[OCV Current L]	A
Exhaust oil control solenoid current (bank 1)	[Exh. OCV Current R]	A
Exhaust oil control solenoid current (bank 2)	[Exh. OCV Current L]	A
Cylinder #1 misfire counter	[Cylinder #1 Misfire Count]	Times
Cylinder #2 misfire counter	[Cylinder #2 Misfire Count]	Times
Cylinder #3 misfire counter	[Cylinder #3 Misfire Count]	Times
Cylinder #4 misfire counter	[Cylinder #4 Misfire Count]	Times
Period of time from the starter ON to the engine speed reaching 400 r/min.	[Engine Starting Time]	ms
Engine speed upon starter off	[Engine Speed (Starter Off)]	r/min
The number of ON for starter after IG OFF →IG ON.	[Starter Count]	Times
Driving distance in the previous operation	[Run Dist of Previous Trip]	km
Engine coolant temperature in the previous operation	[Previous Trip Coolant Temp]	°C or °F
Intake air temperature in the previous operation	[Previous Trip Intake Temp]	°C or °F
Engine oil temperature	[Oil Temperature]	°C or °F
Engine oil temperature in the previous operation	[Previous Trip Eng Oil Temp]	°C or °F
Ambient temperature	[Ambient Temperature]	°C or °F
Ambient temperature in the previous operation	[Previous Trip Ambient Temp]	°C or °F
Throttle opening angle	[Throttle Opening Angle]	°
ISC flow rate calculated from information of each sensor	[ISC Flow]	g/s
Throttle opening angle requested from ISC	[ISC Position]	°
ISC feedback correction amount	[ISC Feedback Value]	g/s
ISC flow rate learning value	[ISC Learning Value]	g/s
ISC electric load correction amount	[Electric Load Feedback Val]	g/s
ISC air conditioner load correction amount	[Air Conditioner FB Val]	g/s
Low revolution record after engine start	[Low Rev for Eng Start]	-
Start time inferior record	[Starting time of engine failure history]	-
Immobilizer fuel cutoff status	[Immobilizer Fuel Cut]	-
Immobilizer fuel cutoff history	[Immobilizer Fuel Cut History]	-
Correction amount for idle stabilization advance angle of #1 cylinder	[Idle Spark Advn Ctrl #1]	°CA
Correction amount for idle stabilization advance angle of #2 cylinder	[Idle Spark Advn Ctrl #2]	°CA
Correction amount for idle stabilization advance angle of #3 cylinder	[Idle Spark Advn Ctrl #3]	°CA

Item	Display	Unit
Correction amount for idle stabilization advance angle of #4 cylinder	[Idle Spark Advn Ctrl #4]	°CA
Deposit loss air amount	[Deposit Loss Flow]	g/s
Elapsed time after high speed revolution judgment	[Fuel Cut Elps Time]	s
Engine speed when fuel cutoff is performed at the cylinder #1	[Engine Speed of Cyl #1]	r/min
Engine speed when fuel cutoff is performed at the cylinder #2	[Engine Speed of Cyl #2]	r/min
Engine speed when fuel cutoff is performed at the cylinder #3	[Engine Speed of Cyl #3]	r/min
Engine speed when fuel cutoff is performed at the cylinder #4	[Engine Speed of Cyl #4]	r/min
Average engine speed in all cylinders	[Av Engine Speed of All Cyl]	r/min
Air fuel ratio learning value (bank 1) for idle area (during direct injection).	[A/F Learn Value Idle #1]	%
Air fuel ratio learning value (bank 1) for low-load area (during direct injection).	[A/F Learn Value Low #1]	%
Air fuel ratio learning value (bank 1) for mid-load area (during direct injection).	[A/F Learn Value Mid1 #1]	%
Air fuel ratio learning value (bank 1) for high-load area (during direct injection).	[A/F Learn Value High #1]	%
Air fuel ratio learning value (bank 1) in the idle area (controlled injection).	[A/F Learn Value Idle #1(Dual)]	%
Air fuel ratio learning value (bank 1) in the low-load area (controlled injection).	[A/F Learn Value Low #1(Dual)]	%
Air fuel ratio learning value (bank 1) in the mid-load area (controlled injection).	[A/F Learn Value Mid1 #1(Dual)]	%
Air fuel ratio learning value (bank 1) in the high-load area (controlled injection).	[A/F Learn Value High #1(Dual)]	%
Number of all diagnostic codes	[Number Of ALL DTCs]	Record
The number of IG ON times	[Trip Count]	trip
Count	[Count]	-
Elapsed time after IG ON	[Time Count]	ms
Ambient temperature sensor value	[Ambient Temperature Sensor Signal]	°C
Target fuel pressure 1	[Commanded Fuel Rail Pressure A]	kPa
Target fuel pressure 2	[Commanded Fuel Rail Pressure B]	kPa
Actual fuel pressure 1	[Fuel Rail Pressure A]	kPa
Actual fuel pressure 2	[Fuel Rail Pressure B]	kPa
Usage rate of the fuel system A in bank 1	[Fuel System A Use Percentage (B1)]	%
Usage rate of the fuel system B in bank 1	[Fuel System B Use Percentage (B1)]	%
O2 sensor impedance value	[O2 Sensor Impedance]	Ω
Alternator mechanical failure	[Alternator Mechanical Error Status]	ON/OFF
Alternator electrical failure	[Alternator Electrical Output Error Status]	ON/OFF
Alternator high temperature failure	[Alternator High Temperature Error Status]	ON/OFF
Alternator communication failure	[Alternator Communication Error Status]	ON/OFF
Regulator temperature	[Regulator Temperature]	°C
Battery charging and discharging current	[Battery Charge/Discharge Current]	A
Battery terminal voltage	[Battery Terminal Voltage]	V
Estimated battery fluid temperature	[Estimated Battery Temperature]	°C
Remaining battery capacity	[Remaining battery capacity]	%

2. Vehicle driving data 1

Vehicle speed

Item name	Description/display range	Normal value	Freeze frame data output
[Vehicle Speed]	• Indicates vehicle speed. • Display range: 0 to 255 km/h {0 to 158 MPH}	Actual vehicle speed	0
	Remarks: • Actual vehicle speed • Vehicle speed is detected by the wheel speed sensor. [Vehicle Speed] data is displayed a little later than the actual vehicle speed. Therefore, even though the vehicle speed data stored in the freeze frame data is (0 km/h {0 MPH}), it does not necessarily show that the malfunction occurs while the vehicle is stopping.		

Engine Speed

Item name	Description/display range	Normal value	Freeze frame data output
[Engine Speed]	• Indicates engine speed. • Display range: 0 to 16383 r/min	650 to 800 r/min: While engine idling (after warming up)	0
	Remarks: When the engine speed indicates 0 r/min, the crankshaft position sensor system malfunction may exist.		

Calculate Load

Item name	Description/display range	Normal value	Freeze frame data output
[Calculated load value]	• Indicates the load size calculated by the engine control computer. • Display range: 0 to 100%	15 to 40 %: While engine idling (after warming up)	0
	Remarks: Calculated based on the intake air amount. Calculate Load = Actual intake air amount / Maximum intake air amount ×100 % (Example: When the actual intake air amount and maximum intake air amount are the same, the engine load value is 100 %.)		

Absolute load value

Item name	Description/display range	Normal value	Freeze frame data output
[Absolute Load Value]	• Indicates vehicle load. • Display range: 0 to 25700%	-	0
	Remarks: • Indicates engine charging efficiency. • Absolute load value = Actual intake air amount (g/s {lb/m}) / Maximum intake air amount Maximum intake air amount = Displacement (L) / 2 ×1.2 (g/rev. {lb/rev.}) NOTE: Intake air amount per one engine revolution (g/rev. {lb/rev.}) = Intake air amount (g/s {lb/m}) ×60 / Engine speed (r/min) (Intake air amount (g/s {lb/m}): Value that is calculated by the intake air flow meter SUB-ASSY)		

Mass air flow

Item name	Description/display range	Normal value	Freeze frame data output
[Mass Air Flow]	• Indicates intake air amount. • Display range: 0 to 655.35 g/s {0 to 86.706 lb/m}	1.0 to 3.0 g/s {0.13 to 0.40 lb/m}: While engine idling (after warming up)	0
		8 to 13 g/s {1.1 to 1.7 lb/m}: 3000 r/min (when vehicle parked)	
	Remarks: Value that is calculated by the intake air flow meter SUB-ASSY		

Atmospheric pressure

Item name	Description/display range	Normal value	Freeze frame data output
[Atmosphere Pressure]	• Indicates atmospheric pressure. • Display range: 0 to 255 kPa {0 to 1913 mmHg, 0 to 75.3 inHg, 37.0 psi}	Equal to atmospheric pressure: IG ON	0
	Remarks: • Calculated based on the intake air amount. • Standard barometric pressure: 101 kPa {758 mmHg, 29.8 inHg, 14.6 psi} • Lowers approx. by 1 kPa {7 mmHg, 0.3 inHg, 0.14 psi} as altitude increases by 100 m {328 ft}. (It varies depending on the weather.)		

Intake manifold pressure

Item name	Description/display range	Normal value	Freeze frame data output
[Mani. Absolute Pressure]	• Indicates the intake manifold pressure. • Display range: 0 to 255 kPa {0 to 1913 mmHg, 0 to 75.3 inHg, 0 to 37.0 psi}	80 to 110 kPa {600 to 825 mmHg, 23.6 to 32.5 inHg, 11.6 to 15.9 psi}: Engine stop	0
		20 to 48 kPa {150 to 360 mmHg, 5.9 to 14.2 inHg, 2.9 to 7.0 psi}: While engine idling (after warming up), air conditioner OFF	
	Remarks: Value that is calculated by the air pressure sensor ASSY		

Engine oil temperature sensor

Item name	Description/display range	Normal value	Freeze frame data output
[Oil Temperature]	• Indicates engine oil temperature. • Display range: -40 to 150°C {-40 to 302°F}	85°C {185°F} or more: After warming-up	0
	Remarks: Value that is calculated by the engine oil temperature sensor		

Engine coolant temperature

Item name	Description/display range	Normal value	Freeze frame data output
[Coolant Temp.]	• Indicates engine coolant temperature. • Display range: -40 to 120°C {-40 to 248°F}	75 to 100°C {167 to 212°F} : After warming-up	0
	Remarks: Indicates engine coolant temperature. NOTE: • Engine coolant temperature after warming up: 75 to 100°C {167 to 212°F} • When it is left for a long time after the engine stopped, the engine coolant temperature, intake air temperature and ambient temperature are almost the same. • When the engine coolant temperature displays -40°C {-40°F} or 120°C {248°F}, open or short circuit in the sensor system may exist.		

Intake air temperature

Item name	Description/display range	Normal value	Freeze frame data output
[Intake Air Temp.]	• Indicates intake air temperature. • Display range: -40 to 215°C {-40 to 419°F}	Equal to ambient temperature around intake air flow meter SUB-ASSY: IG ON	0
	Remarks: Indicates intake air temperature. NOTE: • When it is left for a long time after the engine stopped, the engine coolant temperature, intake air temperature and ambient temperature are almost the same. • When the intake air temperature displays -40°C {-40°F} or 215°C {419°F}, open or short circuit in the sensor system may exist.		

Ambient temperature

Item name	Description/display range	Normal value	Freeze frame data output
[Ambient Temperature]	• Indicates ambient temperature. • Display range: -40 to 215°C {-40 to 419°F}	Equal to ambient temperature: IG ON	0
	Remarks: Indicates ambient temperature. NOTE: When it is left for a long time after the engine stopped, the engine coolant temperature, intake air temperature and ambient temperature are almost the same.		

Elapsed time after starting the engine

Item name	Description/display range	Normal value	Freeze frame data output
[Time Since Engine Start]	• Indicates elapsed time after starting the engine (IG ON →OFF). • Display range: 0 to 65535 s	Elapsed time after starting the engine is displayed.	0
	Remarks: Indicates elapsed time after starting the engine. NOTE: Elapsed time is counted only when the engine is running.		

Coolant temperature at engine start

Item name	Description/display range	Normal value	Freeze frame data output
[Initial Engine Coolant Temp]	• Indicates the engine coolant temperature when the ignition switch is turned to ON. • Display range: -40 to 119.3°C {-40 to 246.7°F}	-	0
	Remarks: Indicates the engine coolant temperature when the ignition switch is turned to ON.		

Intake air temperature at engine start

Item name	Description/display range	Normal value	Freeze frame data output
[Initial Intake Air Temp]	• Indicates the intake air temperature when the ignition switch is turned to ON. • Display range: -40 to 119.3°C {-40 to 246.7°F}	-	0
	Remarks: Indicates the intake air temperature when the ignition switch is turned to ON.		

Auxiliary battery voltage

Item name	Description/display range	Normal value	Freeze frame data output
[Control module voltage]	• Indicates battery voltage. • Display range: 0 to 65.535 V	11 to 14 V: During idling	0
	Remarks: When the battery voltage is 11 V or less, this may affect other systems.		

3. Throttle control

Accelerator opening angle

Item name	Description/display range	Normal value	Freeze frame data output
[Accel. Opening Angle]	• Indicates the opening angle of accelerator position sensor. • Display range: 0 to 399.9%	Actual accelerator opening angle	×
	Remarks: The position where the full close learning has been performed by the accelerator position sensor (sensor output) is 0 %, and the full open position is 100 %.		

Accelerator sensor No. 1 voltage ratio

Item name	Description/display range	Normal value	Freeze frame data output
[Accelerator Pedal Pos.#1]	• Indicates the opening angle of the accelerator position sensor No. 1. • Display range: 0 to 100%	10 to 20%: When accelerator pedal is fully closed.	0
		50 to 70%: When accelerator pedal is fully open.	
	Remarks: The display of the accelerator sensor No. 1 voltage ratio is converted as 5 V = 100 %. NOTE: When DTC related to accelerator sensor system is not input, the system can be basically judged normal.		

Accelerator sensor No. 2 voltage ratio

Item name	Description/display range	Normal value	Freeze frame data output
[Accelerator Pedal Pos.#2]	• Indicates the opening angle of the accelerator position sensor No. 2. • Display range: 0 to 100%	10 to 20%: When accelerator pedal is fully closed.	0
		50 to 70%: When accelerator pedal is fully open.	
	Remarks: The display of the accelerator sensor No. 2 voltage ratio is converted as 5 V = 100 %.		

Accelerator sensor No. 1 voltage

Item name	Description/display range	Normal value	Freeze frame data output
[Accelerator Sensor No1 Voltage]	• Indicates the output voltage of the accelerator position sensor No. 1. • Display range: 0 to 4.980 V	0.5 to 0.8 V: When accelerator pedal is fully closed.	×
		2.4 to 3.5 V: When accelerator pedal is fully open.	
	Remarks: Indicates the output voltage of the accelerator position sensor No. 1.		

Accelerator sensor No. 2 voltage

Item name	Description/display range	Normal value	Freeze frame data output
[Accelerator Sensor No2 Voltage]	• Indicates the output voltage of the accelerator position sensor No. 2. • Display range: 0 to 4.980 V	0.5 to 0.8 V: When accelerator pedal is fully closed.	×
		2.4 to 3.5 V: When accelerator pedal is fully open.	
	Remarks: • Indicates the output voltage of the accelerator position sensor No. 2. • Accelerator sensor No. 2 voltage is used for monitoring the accelerator sensor No. 1 voltage. When the failure occurs in the accelerator sensor No. 1, the engine control computer manages the system using the output voltage of the accelerator sensor No. 2.		

Accelerator sensor full closed condition

Item name	Description/display range	Normal value	Freeze frame data output
[Idle switch (APS)]	• Indicates the condition of accelerator position sensor. • Display: ON/OFF	ON: When accelerator pedal is fully closed.	×
	Remarks: When the display is ON, the accelerator pedal is fully closed.		

Accelerator sensor No. 1 full-close learning value

Item name	Description/display range	Normal value	Freeze frame data output
[Accel Fully Close Learn #1]	• Indicates the full-close learning value of the accelerator position sensor No. 1. • Display range: 0 to 124.5°	2.5 to 6.5°: IG ON	×
	Remarks: Indicates the full-close learning value of the accelerator position sensor No. 1.		

Accelerator sensor No. 2 full-close learning value

Item name	Description/display range	Normal value	Freeze frame data output
[Accel Fully Close Learn #2]	• Indicates the full-close learning value of the accelerator position sensor No. 2. • Display range: 0 to 124.5°	2.5 to 6.5°: IG ON	×
	Remarks: Indicates the full-close learning value of the accelerator position sensor No. 2.		

Throttle sensor No. 1 voltage ratio

Item name	Description/display range	Normal value	Freeze frame data output
[Throttle Opening Angle]	• Indicates the opening angle of the throttle position sensor No. 1. • Display range: 0 to 100%	10 to 22%: When accelerator pedal is fully closed.	0
		80 to 90%: When accelerator pedal is fully open.	
	Remarks: The display of the throttle sensor No. 1 voltage ratio is converted as 5 V = 100 %.		

Throttle sensor No. 2 voltage ratio

Item name	Description/display range	Normal value	Freeze frame data output
[Absolute Throttle Pos.#2]	• Indicates the opening angle of the throttle position sensor No. 2. • Display range: 0 to 100%	35 to 45%: When accelerator pedal is fully closed.	0
		80 to 90%: When accelerator pedal is fully open.	
	Remarks: The display of the throttle sensor No. 2 voltage ratio is converted as 5 V = 100 %.		

ST1 input

Item name	Description/display range	Normal value	Freeze frame data output
[ST1 Input Status]	• Brake pedal signal • Display: ON/OFF	ON: Brake pedal is depressed	×
		OFF: Brake pedal is released	
	Remarks: Stop light switch signal		

Throttle sensor full closed condition

Item name	Description/display range	Normal value	Freeze frame data output
[Idle switch (TPS)]	• Indicates the condition of throttle position sensor. • Display: ON/OFF	ON: When accelerator pedal is fully closed.	×
	Remarks: • Engine control computer makes necessary decision. • When the throttle valve is fully closed, the display is ON. When the valve is fully open, the display is OFF.		

Throttle request opening angle

Item name	Description/display range	Normal value	Freeze frame data output
[Throttle Require Position]	• Indicates the throttle valve request opening angle. • Display range: 0 to 4.980 V	0.5 to 1.1 V: While engine idling (air conditioner OFF, N position)	×
	Remarks: Indicates the voltage of the target throttle valve opening angle calculated by the engine control computer.		

Throttle opening angle (ECM identification value)

Item name	Description/display range	Normal value	Freeze frame data output
[Relative Throttle Pos.]	• Indicates identification value of throttle opening angle on ECM side. • Display range: 0 to 100%	3 to 5%: When accelerator pedal is fully closed.	0
		65 to 75%: When accelerator pedal is fully open.	
	Remarks: • Indicates the throttle valve opening used for the engine control. • Do not refer to the value displayed at IG ON (while engine stops).		

Throttle sensor No. 1 voltage

Item name	Description/display range	Normal value	Freeze frame data output
[Throttle sensor No1 Voltage]	• Indicates the output voltage of the throttle position sensor No. 1. • Display range: 0 to 4.980 V	0.5 to 1.1 V: When accelerator pedal is fully closed.	×
		3.2 to 4.8 V: When accelerator pedal is fully open.	
		0.6 to 1.4 V: Fail safe condition	
	Remarks: Indicates the output voltage of the throttle position sensor No. 1.		

Throttle sensor No. 2 voltage

Item name	Description/display range	Normal value	Freeze frame data output
[Throttle sensor No2 Voltage]	• Indicates the output voltage of the throttle position sensor No. 2. • Display range: 0 to 4.980 V	1.5 to 2.2 V: When accelerator pedal is fully closed.	×
		4.0 to 4.5 V: When accelerator pedal is fully open.	
		1.9 to 2.6 V: Fail safe condition	
	Remarks: Indicates the output voltage of the throttle position sensor No. 2.		

Throttle opening angle command voltage

Item name	Description/display range	Normal value	Freeze frame data output
[Throttle Position Command]	• Indicates the throttle opening angle command voltage. • Display range: 0 to 4.980 V	-	×
	Remarks: Same as [Throttle Require Position].		

Throttle sensor No. 1 opener opening angle

Item name	Description/display range	Normal value	Freeze frame data output
[Throttle Sensor Open Pos #1]	• Indicates the output voltage for the opener opening angle of the throttle position sensor No. 1. • Display range: 0 to 4.980 V	0.7 to 1.1 V:	×
	Remarks: Indicates the output voltage for the opener opening angle of the throttle position sensor No. 1.		

Throttle sensor No. 2 opener opening angle

Item name	Description/display range	Normal value	Freeze frame data output
[Throttle Sensor Open Pos #2]	• Indicates the output voltage for the opener opening angle of the throttle position sensor No. 2. • Display range: 0 to 4.980 V	0.7 to 1.1 V:	×
	Remarks: Indicates the output voltage for the opener opening angle of the throttle position sensor No. 2.		

Throttle motor power supply relay

Item name	Description/display range	Normal value	Freeze frame data output
[Motor Power Supply Relay]	• Indicates operation of throttle motor power supply relay. • Display: ON/OFF	ON: IG ON	×

Target throttle opening angle

Item name	Description/display range	Normal value	Freeze frame data output
[Target Throttle Opening Angle]	• Indicates the throttle target opening angle. • Display range: 0 to 100%	2 to 5%: While engine idling (air conditioner OFF, N position)	0

Throttle motor open-side duty ratio

Item name	Description/display range	Normal value	Freeze frame data output
[Throttle Motor Duty (Open)]	• Indicates the throttle motor open-side duty ratio. • Display range: 0 to 255%	0 to 40 %: While engine idling (air conditioner OFF, N position)	×
	Remarks: • Indicates the command value (duty ratio) from the engine control computer that operates the throttle actuator and opens the throttle valve.		

Throttle motor closed-side duty ratio

Item name	Description/display range	Normal value	Freeze frame data output
[Throttle Motor Duty (Close)]	• Indicates the throttle motor closed-side duty ratio. • Display range: 0 to 255%	0 to 40 %: While engine idling (air conditioner OFF, N position)	×
	Remarks: Command value of engine control computer NOTE: Normally, at idle speed, the throttle opening angle is controlled by [Throttle Motor Duty (Close)]. However, as the accumulation of the carbon increases, the throttle valve may open wider than the opener opening angle (approx. 7°), which may lead to the control by [Throttle Motor Duty (Open)].		

Throttle full-close learning value

Item name	Description/display range	Normal value	Freeze frame data output
[Throttle Fully Close Learn]	• Indicates the full-close learning value of throttle sensor. • Display range: 0 to 4.980 V	0.35 to 0.85 V: IG ON	×
	Remarks: • Engine control computer learns the full-close position of the throttle valve. • Learning is performed after the ignition switch is turned to OFF, or turned to ON after the battery terminal has been reconnected.		

+BM voltage

Item name	Description/display range	Normal value	Freeze frame data output
[(+)BM Voltage]	• Indicates the electronic control throttle voltage. • Display range: 0 to 79.998 V	11 to 14 V: IG ON	×
	Remarks: Power supply that operates the electronic control throttle.		

Electronic throttle actuator power supply output

Item name	Description/display range	Normal value	Freeze frame data output
[Motor Duty Operation Status]	• Indicates the power supply to the electronic control throttle motor. • Display range: ON/OFF	ON: IG ON	×
	Remarks: When the OFF is displayed at IG ON, malfunction may exist in the throttle relay system.		

Throttle opening angle

Item name	Description/display range	Normal value	Freeze frame data output
[Throttle Opening Angle]	• Indicates the throttle opening angle. • Display range: 0 to 499.99°	-	0
	Remarks: Do not refer to the value displayed at IG ON (while engine stops).		

4. ISC

ISC flow rate

Item name	Description/display range	Normal value	Freeze frame data output
[ISC Flow]	• Indicates the flow rate calculated from information of each sensor. • Display range: 0 to 299.99 g/s	-	0
	Remarks: Engine stall, start failure, unstable idling detected		

ISC opening angle

Item name	Description/display range	Normal value	Freeze frame data output
[ISC Position]	• Indicates the ISC request throttle opening angle. • Display range: 0 to 499.99°	-	0
	Remarks: Throttle opening angle at idling operation (accelerator pedal not depressed) (Throttle valve opening angle to maintain the ISC flow rate)		

ISC feedback amount

Item name	Description/display range	Normal value	Freeze frame data output
[ISC Feedback Value]	• Indicates ISC feedback correction amount. • Display range: -150 to 149.99 g/s	-	0
	Remarks: Necessary feedback correction amount for reaching the target idle speed NOTE: When the idle speed is out of target, the feedback amount is increased or decreased. When the feedback amount exceeds a certain threshold, it is reflected to the flow rate learning value.		

ISC flow rate learning value

Item name	Description/display range	Normal value	Freeze frame data output
[ISC Learning Value]	• Indicates the ISC flow rate learning value. • Display range: -150 to 149.99 g/s	-	0
	Remarks: Intake air amount necessary for maintaining the idle speed is learned. NOTE: • When the feedback amount exceeds a certain threshold, it is reflected to the flow rate learning value. • ISC flow rate (ISC total air flow rate) = ISC flow rate learning value + ISC feedback amount + Each correction amount		

ISC electric load correction amount

Item name	Description/display range	Normal value	Freeze frame data output
[Electric Load Feedback Val]	• Indicates the correction flow rate for the electric load. • Display range: -150 to 149.99 g/s	-	0
	Remarks: Indicates the ISC correction amount depending on the electric load condition.		

ISC air conditioner correction amount

Item name	Description/display range	Normal value	Freeze frame data output
[Air Conditioner FB Val]	• Indicates the correction flow rate for the air conditioner load. • Display range: -150 to 149.99 g/s	-	0
	Remarks: Indicates the ISC correction amount depending on the air conditioner load condition.		

Deposit loss air amount

Item name	Description/display range	Normal value	Freeze frame data output
[Deposit Loss Flow]	• Indicates the deposit loss air amount. • Display range: -150 to 149.99 g/s	-	0
	Remarks: • Indicates the amount for correcting the decrease in size of the throttle valve passage caused by the deposit. • Referred to when engine stall, start failure or unstable idling is detected. • After ISC learning value has been initialized, immediately learn [Deposit Loss Flow] using the following procedures. Once the update operation has been completed, perform updating operation slowly. – Start the engine when cold, and let it idle. – After warming up the engine (engine coolant temperature at 80°C {176°F} or more), let it idle for another 5 minutes. – Turn the ignition switch to OFF, and wait for 30 seconds. – Restart the engine and let it idle for 5 minutes.		

ES

5. Fuel system

Fuel pressure

Item name	Description/display range	Normal value	Freeze frame data output
[Fuel Rail Pressure]	• Indicates the fuel pressure on high pressure side. • Display range: 0 to 655350 kPa {0 to 4916354 mmHg, 0 to 193556.9 inHg, 0 to 95024.8 psig}	3000 to 5000 kPa {22506 to 37509 mmHg, 886.0 to 1476.7 inHg, 435.0 to 725.0 psig}: After warming up, while engine idling (air conditioner OFF, N position)	0
	Remarks: When abnormal, fuel system malfunction may exist.		

Fuel pump duty

Item name	Description/display range	Normal value	Freeze frame data output
[Fuel Pump Duty]	• Indicates the control duty of the fuel pump. • Display range: 0 to 399.99%	20 % to 70 %: During idling	0
	Remarks: Indicates the control duty of the fuel pump.		

Fuel level sensor resistance

Item name	Description/display range	Normal value	Freeze frame data output
[Fuel level resistance]	• Indicates the fuel level sensor resistance. • Display range: 0 to 511.5Ω	Fuel receiver gauge at F: 13 to 17 Ω Fuel receiver gauge at E: 406 to 415 Ω	0

Injection period #1 (port)

Item name	Description/display range	Normal value	Freeze frame data output
[Final port injection time (Cylinder 1)]	• Indicates the injection period of #1 cylinder injector (port injection side). • Display range: 0 to 65535 µs	1000 to 2000 µs: While engine idling (after warming up)	0
	Remarks: Value may be displayed even when fuel is not injected (The last injection period is displayed.). Therefore, check the injection condition together with [Injection method].		

Fuel consumption for 10 injections

Item name	Description/display range	Normal value	Freeze frame data output
[Injection Volume (Cylinder1)]	• Indicates the amount of 10 fuel injections. • Display range: 0 to 2.047 ml	0.05 to 0.15 ml:	0
	Remarks: Indicates the integrated value for 10 injections of #1 cylinder.		

High pressure target fuel pressure

Item name	Description/display range	Normal value	Freeze frame data output
[Target Fuel Pressure(High)]	• Indicates the target fuel pressure of high pressure fuel pump. • Display range: 0 to 65535 kPa {0 to 491635 mmHg, 0 to 19355.7 inHg, 0 to 9502.5 psig}	3000 to 5000 kPa {22506 to 37509 mmHg, 886.0 to 1476.7 inHg, 435.0 to 725.0 psig}: During engine idling (after warm-up, air conditioning off, in N position)	0
		7000 to 9000 kPa {52513 to 67517 mmHg, 2067.4 to 2658.1 inHg, 1015.0 to 1305.0 psig}: After warming up, the engine is running at constant speed of 2500 r/min.	
	Remarks: When abnormal, fuel system malfunction may exist.		

ES

High pressure fuel pump 1 discharge rate

Item name	Description/display range	Normal value	Freeze frame data output
[Requested quantity of high-pressure fuel pump discharge (Pump 1)]	• Indicates the discharge rate of high pressure fuel pump. • Display range: 0 to 2.047 ml	0.04 to 0.08 ml: After warming up, while engine idling (air conditioner OFF, N position)	0
	Remarks: When abnormal, fuel system malfunction may exist.		

Injection method

Item name	Description/display range	Normal value	Freeze frame data output
[Injection Mode(D4-S)]	• Indicates injection method. • Display: 1/2/3	-	0
	Remarks: Indicates injection method.		

Main injector injection period #1

Item name	Description/display range	Normal value	Freeze frame data output
[Direct injection timing (Cylinder 1)]	• Indicates the injection period of the main injector. • Display range: -3277 to 3276.7°CA	320 to 340°CA: During engine idling (after warm-up, air conditioning off, in N position)	0
	Remarks: Indicates the injection period of the main injector.		

Final injection period #1 (direct injection)

Item name	Description/display range	Normal value	Freeze frame data output
[Final Direct injection time (Cylinder 1)]	• Indicates the injection period of #1 cylinder injector (cylinder injection side). • Display range: 0 to 65535 µs	0 to 2000 µs: During engine idling (after warm-up, air conditioning off, in N position)	0
	Remarks: Value may be displayed even when fuel is not injected (The last injection period is displayed.). Therefore, check the injection condition together with [Injection method].		

6. EVAP system

ELCM pump

Item name	Description/display range	Normal value	Freeze frame data output
[ELCM pump]	Pump status for key-off type EVAP system: ON/OFF	-	0
	Remarks: "ON" is displayed during key-off type EVAP monitoring executed approximately 5 hours after IG OFF. (Refer to ES - 595)		

7. Purge system

Purge VSV drive duty ratio

Item name	Description/display range	Normal value	Freeze frame data output
[EVAP (Purge) VSV]	• Indicates the drive duty ratio of the purge VSV. • Display range: 0 to 100%	-	0
	Remarks: • The engine control computer uses this duty ratio to open or close the purge VSV. (When the duty ratio is other than 0 %, the control (*1) is performed.) (*1): Fuel evaporative emission generated in the fuel tank is sent into the cylinder via purge VSV and then combusted. • When the engine is cold or immediately after the engine is started, the duty ratio is 0 %.		

Purge ratio

Item name	Description/display range	Normal value	Freeze frame data output
[Evap Purge Flow]	• Indicates the purge ratio. • Display range: 0 to 399.9%	-	0
	Remarks: The purge ratio is a percentage of purge introduction in relation to the intake air amount. (Purge ratio = Purge introduction amount / Intake air amount ×100 (%))		

Purge density learning value

Item name	Description/display range	Normal value	Freeze frame data output
[Purge Density Learn Value]	• Indicates purge density learning value. • Display range: -200 to 199.993%	-	0
	Remarks: Determine the purge density from the change in the air fuel ratio F/B correction value when the purge is introduced. Use the following procedures to perform the purge density learning. 1. Air fuel ratio learning is completed, and F/B correction value is within 0±2 %. 2. Make sure of the change in air fuel ratio F/B correction value when purge is introduced. 3. The engine control computer determines the purge introduction ratio (purge ratio) for the intake air amount. Therefore, learn the change amount of F/B correction value for the purge ratio of 1 % as the purge density learning value. 4. Based on the purge density learning value and purge ratio, increase and decrease the fuel injection amount, thus controlling it to the stoichiometric air fuel ratio. NOTE: • Normally, purge density learning value is within approx. ±1 %. • 1 %: Purge gas HC density not detected • 0 %: Purge gas HC density almost equal to stoichiometric air fuel ratio • Largely inclined to negative side: Purge gas HC density high		

Evaporative system pressure

Item name	Description/display range	Normal value	Freeze frame data output
[Absolute Evap Sys. Pressure]	Vapor pressure pump / Minimum: 0 kPa {0 mmHg, 0 inHg, 0 psig}, Maximum: 327.675 kPa {2458.18 mmHg, 96.7784 inHg, 47.5124 psig}	Approx. 100 kPa {750 mmHg, 29.5 inHg, 14.5 psig}: IG ON	0
	Remarks: Indicates the EVAP system pressure monitored by the canister pressure sensor. NOTE: • The value is almost equal to barometric pressure excluding the case where the monitoring is being performed. • While the engine is stopped, the pressure of the vapor pump is almost equal to that of the barometric pressure. For this reason, the value can be used to check the canister pressure sensor for malfunction or noise, or to check that the sensor output does not stop at the particular value.		

ELCM switching valve

Item name	Description/display range	Normal value	Freeze frame data output
[ELCM switching valve]	Vent valve status for key-off type EVAP system: ON/OFF	ON: Close	×
		OFF: Open	

8. Air fuel ratio system

Target air fuel ratio

Item name	Description/display range	Normal value	Freeze frame data output
[Target Equivalence Ratio]	• Indicates the target value of air fuel ratio control. • Display range: 0 to 1.999	0.8 to 1.2: While engine is idling	0
	Remarks: • Indicates the target air fuel ratio by the engine control computer. • Target air fuel ratio display is 1.0: Stoichiometric air fuel ratio • Target air fuel ratio display is more than 1.0: Lean control • Target air fuel ratio display is less than 1.0: Rich control • When normal, actual air fuel ratio λB1S1 and target air fuel ratio are almost the same.		

ES

Actual air fuel ratio λB1S1

Item name	Description/display range	Normal value	Freeze frame data output
[A/F Sensor #11]	• Indicates the air fuel ratio of the air/fuel ratio sensor. • Display range: 0 to 1.999	1: Stoichiometric air fuel ratio	0
		Less than 1: Rich state	
		More than 1: Lean state	
	Remarks: • Calculated based on the air/fuel sensor output. • By performing the fuel injection amount of [Active Test], it is possible to make judgment of sensor by checking the output of the sensors located at the front and rear of the catalytic converter.		

AFS Voltage B1S1

Item name	Description/display range	Normal value	Freeze frame data output
[A/F Sensor #11]	• Indicates the output of the air/fuel ratio sensor. • Display range: 0 to 7.999 V	Approx. 2.2 V: While engine idling (after warming up)	0
	Remarks: • Indicates the output voltage of the air/fuel ratio sensor (Terminal voltage of the air/fuel ratio sensor cannot be measured.). Calculation is made by the engine control computer based on the output current of the air/fuel ratio sensor. (For actual air/fuel ratio sensor output, refer to "A/F sensor current B1S1" listed below.) • By performing the fuel injection amount of [Active Test], it is possible to make judgment of sensor by checking the output of the sensors located at the front and rear of the catalytic converter.		

A/F sensor current B1S1

Item name	Description/display range	Normal value	Freeze frame data output
[A/F Sensor #11]	• Indicates the current of the air/fuel ratio sensor. • Display range: -128 to 127.99 mA	-0.5 to 0.5 mA: During idling	0
	Remarks: • A/F sensor current B1S1 display is -0.5 to 0.5 mA: Stoichiometric air fuel ratio • When the output of the A/F sensor current B1S1 is not within 0.7 to 2.2 mA during fuel cut control, malfunction may exist in the air/fuel ratio sensor or its circuit.		

A/F sensor resistance B1S1

Item name	Description/display range	Normal value	Freeze frame data output
[A/F Sensor Impedance B1]	• Indicates the resistance of the air/fuel ratio sensor. • Display range: 0 to 6553.5Ω	Approx. 32 Ω: After warm-up, during idling	0
	-		

A/F heater duty ratio #1

Item name	Description/display range	Normal value	Freeze frame data output
[A/F Heater Duty]	• Indicates the air/fuel ratio sensor heater duty ratio. • Display range: 0 to 399.9%	0 to 100 %	0
	Remarks: A/F heater duty ratio #1 display is not 0 %: Heater is energized.		

Oxygen sensor voltage B1S2

Item name	Description/display range	Normal value	Freeze frame data output
[Oxygen sensor #12]	• Indicates the oxygen sensor output voltage. • Display range: 0 to 1.275 V	0 to 0.9 V: During driving at 70 km/h {43 MPH}	0
	Remarks: • Indicates the oxygen sensor output voltage. • Oxygen sensor voltage B1S2 display is around 0 V: Leaner than stoichiometric air fuel ratio • Oxygen sensor voltage B1S2 display is around 1 V: Richer than stoichiometric air fuel ratio • During air fuel ratio feedback control, the voltage fluctuates between 0 and 1 V. • By performing the fuel injection amount of [Active Test], it is possible to make judgment of sensor by checking the output of the sensors located at the front and rear of the catalytic converter.		

Oxygen heater B1S1, B1S2

Item name	Description/display range	Normal value	Freeze frame data output
[O2 Heater B1S1] [O2 Heater B1S2]	• Indicates the oxygen sensor heater. • Display: ON/OFF	-	0

Oxygen heater duty ratio

Item name	Description/display range	Normal value	Freeze frame data output
[O2 Sensor Heater Duty]	• Indicates the oxygen sensor heater duty. • Display range: 0 to 400%	0 to 100%:	0
	Remarks: The display is not 0 %: Heater is being energized.		

F/B correction value bank 1

Item name	Description/display range	Normal value	Freeze frame data output
[Short term fuel trim B1]	• Indicates air fuel ratio F/B amount. • Display range: -100 to 99.2%	-15 to 15%	0
	Remarks: Air fuel ratio correction during normal driving (F/B correction) used for the engine control computer to maintain around the stoichiometric air fuel ratio.		

F/B learning value bank 1

Item name	Description/display range	Normal value	Freeze frame data output
[Long term fuel trim B1]	• Indicates the learning value to correct the air fuel ratio F/B control. • Display range: -100 to 99.2%	-15 to 15%	0
	Remarks: When F/B correction is performed for a certain period of time, the F/B learning value is used for the control to bring the F/B correction around 0, so that the correction will be made according to the individual difference of engine (caused by aging and/or change in environment of usage). This item can be utilized for judgment of whole system related to air fuel ratio control. Judgment can be performed by adding the values as follows: F/B correction value + F/B learning value NOTE: • +15 % or more: Lean condition may exist. • -15 to +15 %: Air fuel ratio is judged normal. • Less than -15 %: Rich condition may exist. • Air fuel ratio F/B learning value is learned and stored separately in each engine operating zone (engine speed ×load). [Long FT #1] indicates the learning value of current operating zone. The learning value for each zone is [A/F Learn Value Idle #1, #1Dual], [A/F Learn Value Low #1, #1 Dual], [A/F Learn Value Mid1 #1, #1 Dual] and [A/F Learn Value High #1, #1Dual]. The zone indicating the same learning value as the F/B learning value bank 1 is the current operating zone.		

F/B operation condition bank 1

Item name	Description/display range	Normal value	Freeze frame data output
[Fuel system for Bank 1]	• Indicates the operation status of the air fuel ratio F/B (feedback) control. • Display: [Op_init.] / [Cl_normal] / [Op_drv-con] / [Op_fault]	-	0

9. Ignition system

Ignition timing #1

Item name	Description/display range	Normal value	Freeze frame data output
[Ignition timing adv. #1]	• Indicates the ignition timing of #1 cylinder. • Display range: -64 to 63.5°	BTDC 2 to 22°: While engine idling (N position)	0

Knock control value

Item name	Description/display range	Normal value	Freeze frame data output
[Knock Feedback Value]	• Indicates the knock control value. • Display range: -1024 to 1023.9°CA	-	0
	Remarks: Indicates the knock retard correction amount determined by the condition of knocking occurrence. Ignition timing = Max. retard value (*1) + Knock correction learning value (*2) + Knock control value (*3) Example: 21°CA = 10°CA + 14°CA - 3°CA (*1): Fixed value determined by engine speed and load (*2): Obtain the value as follows, and perform control with the knock control value of -3°CA. Knock control value is less than -4°CA: Decrease the knock correction learning value gradually. Knock control value is -2°CA or more: Increase the knock correction learning value gradually. (*3): Based on -3°CA, the calculation is made depending on the occurrence and frequency of the knocking condition. Knocking not occurred: Increase the knock control value. Knocking occurred: Decrease the knock control value. NOTE: When the knock control value does not change before and after the knocking occurrence (The value stays around -3°CA.), the engine control computer cannot determine the knocking. This may be caused by the poor sensitivity of knock sensor, the improper installation and/or the defective wiring harness of knock sensor circuit.		

Knocking correction learning value

Item name	Description/display range	Normal value	Freeze frame data output
[Knock Correct Learn Value]	• Indicates the knock control correction learning value. • Display range: -1024 to 1023.9°CA	-	0
	Remarks: • Refer to "Remarks" in the knock control value. • When the knocking and/or insufficient output occurs, compare the following values with another vehicle of the same type. – Engine Speed – Calculate Load – Ignition timing #1 – Knock control value – Knocking correction learning value • When the knock correction learning value is large: Knocking does not occur, and advanced ignition control is performed. • When the knock correction learning value is small: Knocking occurs, and retardation is performed with less margin. NOTE: When the knocking occurs continuously and the knock correction learning value is smaller than the reference vehicle of the same type, it is possible that the ignition timing is retarded around to the maximum retard value. This may be caused by the aging due to carbon accumulation (oil dropping, poor-quality gasoline).		

Idle stabilization advance angle (#1 cylinder) to (#4 cylinder)

Item name	Description/display range	Normal value	Freeze frame data output
[Idle Spark Advn Ctrl #1] [Idle Spark Advn Ctrl #2] [Idle Spark Advn Ctrl #3] [Idle Spark Advn Ctrl #4]	• Indicates individual cylinder advance angle correction amount. • Display range: -16 to 15.875°CA	-	0
	Remarks: • Indicates the idle stabilization advance angle correction value per cylinder. When some delays occur in the revolution speed in the specific cylinder, the revolution speed is recovered by advancing only the relevant cylinder, thus stabilizing the idle speed. • In some cases, by checking the idle stabilization advance angle, the engine malfunction occurrence in the specific cylinder can be determined.		

10. VVT control

Number of cleaning executions for VVT self-recovery

Item name	Description/display range	Normal value	Freeze frame data output
[Number of Cleaning Executions for VVT Self-recovery]	• Indicates the number of cleaning executions for VVT self-recovery • Display range: 0 to 255	-	0
	Remarks: Indicates the number of times when the mode to eliminate foreign matter included in the cam timing oil control valve on the intake side is activated.		

Number of cleaning executions for Ex VVT self-recovery

Item name	Description/display range	Normal value	Freeze frame data output
[Number of Cleaning Executions for Ex VVT Self-recovery]	• Indicates the number of cleaning executions for exhaust VVT self-recovery • Display range: 0 to 255	-	0
	Remarks: Indicates the number of times when the mode to eliminate foreign matter included in the cam timing oil control valve on the exhaust side is activated.		

VVT hold duty bank 1, 2

Item name	Description/display range	Normal value	Freeze frame data output
[VVT Aim Angle #1] [VVT Aim Angle #2]	• Indicates VVT hold duty (bank 1 or bank 2). • Display range: 0 to 399.9%	-	0
	Remarks: Indicates OCV drive duty ratio necessary for blocking the oil passage of the camshaft timing oil control valve to hold the advance angle condition of VVT controller.		

VVT displacement angle bank 1, 2

Item name	Description/display range	Normal value	Freeze frame data output
[VVT Change Angle #1] [VVT Change Angle #2]	• Indicates the actual displacement angle of VVT (bank 1 or bank 2). • -320 to 320°FR	-	0
	Remarks: • Indicates the actual displacement angle of VVT. • If the value for VVT displacement angle does not change when performing [Active Test], malfunction may exist in the camshaft position sensor system.		

OCV drive duty ratio bank 1, 2

Item name	Description/display range	Normal value	Freeze frame data output
[VVT OCV Duty #1] [VVT OCV Duty #2]	• Indicates the duty ratio to the VVT OCV (bank 1 or bank 2). • Display range: 0 to 399.9%	-	0

Exhaust VVT hold duty bank 1, 2

Item name	Description/display range	Normal value	Freeze frame data output
[VVT Ex Hold Lrn Val #1] [VVT Ex Hold Lrn Val #2]	• Indicates the exhaust VVT hold duty (bank 1 or bank 2). • Display range: 0 to 399.9%	-	0
	Remarks: Indicates OCV drive duty ratio necessary for blocking the oil passage of the camshaft timing oil control valve to hold the advance angle condition of VVT controller.		

Exhaust VVT displacement angle bank 1, 2

Item name	Description/display range	Normal value	Freeze frame data output
[VVT Ex Change Angle #1] [VVT Ex Change Angle #2]	• Indicates the actual displacement angle of exhaust VVT (bank 1 or bank 2). • Display range: 0 to 639.9°FR	-	0
	Remarks: Indicates the actual displacement angle of exhaust VVT.		

Exhaust OCV drive duty ratio bank 1, 2

Item name	Description/display range	Normal value	Freeze frame data output
[VVT Ex OCV Duty #1] [VVT Ex OCV Duty #2]	• Indicates the duty ratio to the exhaust VVT OCV (bank 1 or bank 2). • Display range: 0 to 399.9%	-	0

VVT target displacement angle bank 1, bank 2

Item name	Description/display range	Normal value	Freeze frame data output
[VVT Target Change Angle #1] [VVT Target Change Angle #2]	• Indicates the VVT target displacement angle (bank 1 or bank 2). • Display range: -320 to 320°FR	-	0

ES

Exhaust VVT target displacement angle bank 1, bank 2

Item name	Description/display range	Normal value	Freeze frame data output
[VVT Ex Target Change Angle #1] [VVT Ex Target Change Angle #2]	• Indicates the exhaust VVT target displacement angle (bank 1 or bank 2). • Display range: 0 to 640°FR	-	0

VVT bank 1 OCV current, VVT bank 2 OCV current

Item name	Description/display range	Normal value	Freeze frame data output
[OCV Current R] [OCV Current L]	• Indicates the OCV current (bank 1 or bank 2). • Display range: 0 to 1.99 A	0.55 to 0.85 A: After warm-up, during idling	0

Exhaust VVT bank 1 OCV current, exhaust VVT bank 2 OCV current

Item name	Description/display range	Normal value	Freeze frame data output
[Exh. OCV Current R] [Exh. OCV Current L]	• Indicates the exhaust OCV current (bank 1 or bank 2). • Display range: 0 to 1.99 A	0.65 to 0.80 A: After warm-up, during idling	0

11. Catalyst

Catalyst temperature B1S1

Item name	Description/display range	Normal value	Freeze frame data output
[Catalyst Temperature #11]	• Indicates catalyst temperature. • Display range: -40 to 6513.5°C {-40 to 11756°F}	-	0
	Remarks: Estimated temperature of the front catalytic converter calculated by the engine control computer		

12. Vehicle driving data 2

Starter switch

Item name	Description/display range	Normal value	Freeze frame data output
[Starter Switch]	• Indicates that the engine is being cranked. • Display: ON/OFF	ON: When cranking	0
		OFF: Not cranking	

Starter cut relay

Item name	Description/display range	Normal value	Freeze frame data output
[Starter cut relay]	• Indicates the starter cut relay operation. • Display: ON/OFF	OFF: When cranking	0

ACC relay

Item name	Description/display range	Normal value	Freeze frame data output
[ACC Relay Monitor]	• Indicates that the ACC relay is operating. • Display: ON/OFF	ON: IG ON or while cranking	0
		OFF: IG OFF or while cranking	

Neutral start switch

Item name	Description/display range	Normal value	Freeze frame data output
[Neutral Position Switch]	• Indicates the shift lever P or N position. • Display: ON/OFF	ON: Shift lever N or P	0
		OFF: Shift lever N or except for P	

Clutch switch

Item name	Description/display range	Normal value	Freeze frame data output
[Clutch Switch]	• Indicates whether the clutch pedal is operated or not. • Display: ON/OFF	ON: Clutch pedal is depressed.	0
		OFF: Clutch pedal is released.	

Stop light switch

Item name	Description/display range	Normal value	Freeze frame data output
[Stop Light Switch]	• Indicates whether the brake pedal is operated or not. • Display: ON/OFF	ON: Brake pedal is depressed.	0
		OFF: Brake pedal is released.	

Air conditioner switch

Item name	Description/display range	Normal value	Freeze frame data output
[A/C Switch]	• Indicates that the air conditioner is operating. • Display: ON/OFF	ON: A/C ON	0
		OFF: A/C OFF	

Idle switch

Item name	Description/display range	Normal value	Freeze frame data output
[Idle Switch]	• Indicates that the accelerator pedal is fully closed. • Display: ON/OFF	ON: Accelerator pedal is fully closed.	0
		OFF: Accelerator pedal is depressed.	

Rear defogger switch

Item name	Description/display range	Normal value	Freeze frame data output
[Rear Defogger SW]	• Indicates the condition of the defogger switch. • Display: ON/OFF	ON: Defogger switch ON	0

Blower fan switch

Item name	Description/display range	Normal value	Freeze frame data output
[Blower Fan SW]	• Indicates the condition of the blower fan switch. • Display: ON/OFF	ON: Blower fan switch ON	0

Light switch

Item name	Description/display range	Normal value	Freeze frame data output
[Light Switch]	• Indicates the condition of the lighting switch. • Display: ON/OFF	ON: Lighting switch ON	0

Wiper switch

Item name	Description/display range	Normal value	Freeze frame data output
[Wiper Switch]	• Indicates the condition of the wiper switch. • Display: ON/OFF	ON: Wiper switch ON	0

IG condition

Item name	Description/display range	Normal value	Freeze frame data output
[Ignition Switch]	• Indicates the condition of the ignition switch. • Display range: ON/OFF	ON: IG ON	0

ES

F/C operation condition

Item name	Description/display range	Normal value	Freeze frame data output
[Fuel Cut Condition]	• Indicates that the fuel cut is operating. • Display: ON/OFF	ON: Fuel cut in progress	0

13. Test result

Monitor information

Item name	Description/display range	Normal value	Remarks	Freeze frame data output
[Complete Parts Monitor]	• Indicates the monitoring condition of the component. • Display: [Valid/Invalid]	-	*	×
[Fuel System Monitor]	• Indicates the monitoring condition of the fuel system. • Display: [Valid/Invalid]	-	*	×
[Misfire Monitor]	• Indicates the condition of the misfire test. • Display: [Valid/Invalid]	-	*	×
[EGR/VVT Monitor]	• Indicates the condition of EGR system test. • Display: [Valid/Invalid]	-	*	×
[EGR/VVT Monitor Result]	• Indicates the result of EGR system test. • Display: [Complete/Incomplete]	-	*	×
[O2S(A/FS) Heater Monitor]	• Indicates the condition of oxygen sensor heater test. • Display: [Valid/Invalid]	-	*	×
[O2S(A/FS) Heater Monitor]	• Indicates the result of oxygen sensor heater test. • Display: [Complete/Incomplete]	-	*	×
[O2S(A/FS) Monitor]	• Indicates the condition of the oxygen sensor (air/fuel ratio sensor) test. • Display: [Valid/Invalid]	-	*	×
[O2S(A/FS) Monitor]	• Indicates the result of the oxygen sensor (air/fuel ratio sensor) test. • Display: [Complete/Incomplete]	-	*	×
[A/C Monitor]	• Indicates the condition of A/C system refrigerant test. • Display: [Valid/Invalid]	-	*	×
[A/C Monitor]	• Indicates the result of A/C system refrigerant test. • Display: [Complete/Incomplete]	-	*	×
[Secondary Air Injection System Monitor]	• Indicates the condition of secondary air system test. • Display: [Valid/Invalid]	-	*	×
[Secondary Air Injection System Monitor Result]	• Indicates the result of secondary air system test. • Display: [Complete/Incomplete]	-	*	×
[EVAP Monitor]	• Indicates the condition of evaporative emission system test. • Display: [Valid/Invalid]	-	*	×
[EVAP Monitor Result]	• Indicates the result of evaporative emission system test. • Display: [Complete/Incomplete]	-	*	×
[Heated Catalyst Monitor]	• Indicates the condition of the heater catalyst test. • Display: [Valid/Invalid]	-	*	×
[Heated Catalyst Monitor Result]	• Indicates the result of the heater catalyst test. • Display: [Complete/Incomplete]	-	*	×
[Catalyst Monitor]	• Indicates the condition of the catalyst test. • Display: [Valid/Invalid]	-	*	×

Item name	Description/display range	Normal value	Remarks	Freeze frame data output
[Catalyst Monitor Result]	• Indicates the result of the catalyst test. • Display: [Complete/Incomplete]	-	*	×
[Component monitoring]	• Indicates the monitoring test of the comprehensive component. • Display: [Valid/Invalid]	-	*	×
[Component monitoring]	• Indicates the monitoring test of the comprehensive component. • Display: [Complete/Incomplete]	-	*	×
[Fuel system monitoring]	• Indicates the monitoring test of the fuel system. • Display: [Valid/Invalid]	-	*	×
[Fuel system monitoring]	• Indicates the monitoring test of the fuel system. • Display: [Complete/Incomplete]	-	*	×
[Misfire monitoring]	• Indicates the condition of the misfire test. • Display: [Valid/Invalid]	-	*	×
[Misfire monitoring]	• Indicates the condition of the misfire test. • Display: [Complete/Incomplete]	-	*	×
[EGR system]	• Indicates the monitoring test of EGR system. • Display: [Valid/Invalid]	-	*	×
[EGR system]	• Indicates the monitoring test of EGR system. • Display: [Complete/Incomplete]	-	*	×
[O2 Heater Diagnosis]	• Indicates the monitoring test of the oxygen sensor heater or air/fuel ratio sensor heater. • Display: [Valid/Invalid]	-	*	×
[O2 Heater Diagnosis]	• Indicates the monitoring test of the oxygen sensor heater or air/fuel ratio sensor heater. • Display: [Complete/Incomplete]	-	*	×
[Oxygen sensor]	• Indicates the monitoring test of the oxygen sensor heater or air/fuel ratio sensor heater. • Display: [Valid/Invalid]	-	*	×
[Oxygen sensor]	• Indicates the monitoring test of the oxygen sensor heater or air/fuel ratio sensor heater. • Display: [Complete/Incomplete]	-	*	×
[A/C system refrigerant]	• Indicates the monitoring test of the A/C system. • Display: [Valid/Invalid]	-	*	×
[A/C system refrigerant]	• Indicates the monitoring test of the A/C system. • Display: [Complete/Incomplete]	-	*	×
[Secondary air system]	• Indicates the monitoring test of secondary air system. • Display: [Valid/Invalid]	-	*	×
[Secondary air system]	• Indicates the monitoring test of secondary air system. • Display: [Complete/Incomplete]	-	*	×
[Evaporative purge system]	• Indicates the monitoring test of EVAP system. • Display: [Valid/Invalid]	-	*	×
[Evaporative purge system]	• Indicates the monitoring test of EVAP system. • Display: [Complete/Incomplete]	-	*	×
[Heated catalyst]	• Indicates the monitoring test of the heating-type catalyst. • Display: [Valid/Invalid]	-	*	×

Item name	Description/display range	Normal value	Remarks	Freeze frame data output
[Heated catalyst]	• Indicates the monitoring test of the heating-type catalyst. • Display: [Complete/Incomplete]	-	*	×
[Catalyst Diagnosis]	• Indicates the monitoring test of the catalyst. • Display: [Valid/Invalid]	-	*	×
[Catalyst Diagnosis]	• Indicates the monitoring test of the catalyst. • Display: [Complete/Incomplete]	-	*	×

*:
[Valid]: The monitoring condition of the vehicle is enabled.
[Invalid]: The monitoring condition of the vehicle is disabled.
[Complete/Incomplete]: When the monitoring was completed once in the past, this item changes from [Incomplete] into [Complete]. Even when the ignition switch is turned to OFF, this item does not change. However, if DTC is cleared or the battery cable is disconnected, it is returned to [Incomplete].

14. Vehicle driving data 3

TC terminal

Item name	Description/display range	Normal value	Freeze frame data output
[TC Terminal]	• Indicates the condition of the TC terminal. • Display: ON/OFF	-	0

Number of DTC

Item name	Description/display range	Normal value	Freeze frame data output
[Number of Diagnostic Code(s):]	• Indicates the number of DTC recorded. • Display range: 0 to 127	0	×

Engine warning light

Item name	Description/display range	Normal value	Freeze frame data output
[MIL Status]	• Indicates the status of the engine warning light. • Display: ON/OFF	-	×

Driving distance after malfunction occurrence

Item name	Description/display range	Normal value	Freeze frame data output
[Lighted MI lamp history]	• Indicates the driving distance after the engine warning light illuminates. • Display range: 0 to 65535 km	-	×
	Remarks: Indicates the driving distance after the engine warning light illuminates.		

Engine running time during engine warning light illumination

Item name	Description/display range	Normal value	Freeze frame data output
[Time while MIL lighted]	• Indicates the engine running time after the engine warning light illuminates. • Display range: 0 to 65535 min	-	×

Elapsed time after DTC clearance

Item name	Description/display range	Normal value	Freeze frame data output
[Time since DTC cleared]	• Indicates elapsed time after clearing DTC. • Display range: 0 to 65535 min	Elapsed time after clearing DTC	0
	Remarks: Indicates elapsed time after clearing DTC. (Time is not counted with IG OFF.)		

Driving distance after DTC clearance

Item name	Description/display range	Normal value	Freeze frame data output
[Meter since DTC cleared]	• Indicates the driving distance after clearing DTC. • Display range: 0 to 65535 km	Driving distance after clearing DTC	0
	Remarks: Indicates the driving distance after clearing DTC.		

Number of warm-ups after DTC clearance

Item name	Description/display range	Normal value	Freeze frame data output
[Number of warm-ups]	• Indicates the number of warm-ups after clearing DTC. • Display range: 0 to 255	-	0
	Remarks: Indicates the number of warm-ups (*1) after clearing DTC. NOTE: (*1): After starting the engine, the coolant temperature rises approx. by 20°C {36°F} or more. When the coolant temperature exceeds 70°C {158°F}, the number of warming-up is increased by 1.		

Driving distance after battery reconnection

Item name	Description/display range	Normal value	Freeze frame data output
[Distance Battery Cable Disconnect]	• Indicates the driving distance after reconnecting the battery. • Display range: 0 to 65535 km	Driving distance after battery reconnection	0

OBD system

Item name	Description/display range	Normal value	Freeze frame data output
[OBD System]	• Indicates the on-board diagnostics system. • -	-	×

15. Misfiring

Misfire counter #1 to misfire counter #4

Item name	Description/display range	Normal value	Freeze frame data output
[Cylinder #1 Misfire Count] [Cylinder #2 Misfire Count] [Cylinder #3 Misfire Count] [Cylinder #4 Misfire Count]	• Indicates the misfire counter for each cylinder. • Display range: 0 to 255	0 to 16	0
	Remarks: • Indicates the misfire counter for each cylinder. • Misfire counter is incremented by one for every misfire. • The value is reset at every 200 revolution of the engine. • When failure occurs, check this counter to specify the abnormal cylinder.		

16. Vehicle driving data 4

Engine speed with starter OFF

Item name	Description/display range	Normal value	Freeze frame data output
[Engine Speed (Starter Off)]	• Indicates the engine speed with starter OFF. • Display range: 0 to 51199 r/min	-	0
	Remarks: Indicates the engine speed immediately after starting the engine.		

Number of ON for current trip starter

Item name	Description/display range	Normal value	Freeze frame data output
[Starter Count]	• Indicates the number of ON for starter after IG OFF →IG ON. • Display range: 0 to 255	-	0
	Remarks: Indicates the number of ON for current trip starter		

The number of DTCs for which 40 warm-up cycles do not continue in the normal status.

Item name	Description/display range	Normal value	Freeze frame data output
[# Codes(Include History)]	• The number of DTCs displayed in [Present fault] • Display range: 0 to 11	0	×
	Remarks: Indicates the number of DTC that triggers the MIL illumination and does not continue 40 warm-up cycles in the normal status. NOTE: • The DTCs that are not related to exhaust emission such as P1603 and P1604 are not included. As for the DTC requiring two-times performance of diagnosis for determining the malfunction, even if temporary malfunction is determined at first time, this number is not counted in the number of DTC. • Indicates it as [Present fault] until 40 warm-up cycles are completed even if no malfunction is present. • After the DTC has been stored, when 40 warm-up cycles are completed in the normal status, the engine control computer automatically clears the DTC.		

ES

Number of all diagnostic codes

Item name	Description/display range	Normal value	Freeze frame data output
[Number Of ALL DTCs]	• The number of DTCs displayed in [Present fault] • Display range: 0 to 11	0	×
	Remarks: Indicates the total number of DTCs including DTC not related to exhaust emission. As for the DTC requiring two-times performance of diagnosis for determining the malfunction, even if temporary malfunction is determined at first time, this number is counted in the number of DTC.		

The number of IG ON times

Item name	Description/display range	Normal value	Freeze frame data output
[Trip Count]	• Indicates the total number of IG ON after building of vehicle. • Display range: 0 to 65535 trip	-	0
	Remarks: Indicates the total number of IG ON after building of vehicle. NOTE: By checking [Time Count], [Normal sampling], and [Freeze frame data], the information on "How many IG ON operations have been performed since this DTC was recorded?" or "How much time had elapsed after IG ON when the DTC was recorded?" can be obtained.		

Count

Item name	Description/display range	Normal value	Freeze frame data output
[Count]	• Indicates the selection of the counter for the integrated unit or the unique engine control computer counter when calculating the elapsed time after IG ON. • Display: [Normal counter] / [Original count]	Normal count	0
	Remarks: Normal counter indicates the number of IG ON and elapse of time after IG ON by obtaining the count information from the master integrated unit. Original count indicates the number of IG ON and elapse of time after IG ON by the engine control computer when the count information cannot be obtained from the integrated unit for some reasons. When DTC is recorded, time stamp can be checked by confirming [Trip Count] or [Time Count] for freeze frame data.		

Elapsed time after IG ON

Item name	Description/display range	Normal value	Freeze frame data output
[Time Count]	• Indicates the elapsed time after IG ON. • Display range: 0 to 53687091100 ms	-	0
	Remarks: Indicates the elapsed time after IG ON. NOTE: By checking [Trip Count], [Normal sampling], and [Freeze frame data], the information on "How many IG ON operations have been performed since this DTC was recorded?" or "How much time had elapsed after IG ON when the DTC was recorded?" can be obtained.		

Driving distance of previous trip

Item name	Description/display range	Normal value	Freeze frame data output
[Run Dist of Previous Trip]	• Indicates the driving distance of previous operation. • Display range: 0 to 655.35 km	-	0
	Remarks: • [Run Dist of Previous Trip] displays the driving distance for the previous trip until 5 seconds after the engine has started during P1604 detection period. After the period has elapsed, however, the value is once cleared, and the driving distance for the current trip, which is integrated with the driving distance detected from the vehicle speed, is displayed. • The freeze frame data in which P1604 start failure phenomenon is detected displays the driving distance for the previous trip. However, in the freeze frame data and snap shot measurement for DTCs (other than P1604), the driving distance for the current trip is displayed.		

Engine start time

Item name	Description/display range	Normal value	Freeze frame data output
[Engine Starting Time]	• Indicates the engine start time. • Display range: 0 to 655350 ms	-	0
	Remarks: • Indicates the period of time from the starter ON to the engine speed reaching 500 r/min. • The value is reset 5 seconds after starting the engine, and "0 ms" is displayed.		

Engine coolant temperature in previous trip

Item name	Description/display range	Normal value	Freeze frame data output
[Previous Trip Coolant Temp]	• Indicates the engine coolant temperature in the previous operation. • Display range: -40 to 120°C {-40 to 248°F}	-	0

Intake air temperature in previous trip

Item name	Description/display range	Normal value	Freeze frame data output
[Previous Trip Intake Temp]	• Indicates the intake air temperature of the previous operation. • Display range: -40 to 120°C {-40 to 248°F}	-	0

Engine oil temperature in previous trip

Item name	Description/display range	Normal value	Freeze frame data output
[Previous Trip Eng Oil Temp]	• Indicates the engine oil temperature in the previous operation. • Display range: -40 to 150°C {-40 to 302°F}	-	0

Ambient temperature in previous trip

Item name	Description/display range	Normal value	Freeze frame data output
[Previous Trip Ambient Temp]	• Indicates the ambient temperature of previous operation. • Display range: -40 to 215°C {-40 to 419°F}	-	0

Start time inferior record

Item name	Description/display range	Normal value	Freeze frame data output
[Starting time of engine failure history]	• Indicates the start time inferior record. • Display: ON/OFF	-	0
	Remarks: When the engine speed does not reach 500 r/min while cranking, [ON] is displayed.		

Low revolution record after engine start

Item name	Description/display range	Normal value	Freeze frame data output
[Low Rev for Eng Start]	• Indicates the low revolution record after engine start. • Display: ON/OFF	-	0
	Remarks: When the engine speed reduces to 200 r/min or less approx. within 2 seconds after engine start, [ON] is displayed.		

Elapsed time after high speed revolution

Item name	Description/display range	Normal value	Freeze frame data output
[Fuel Cut Elps Time]	• Indicates the elapsed time after high speed revolution judgment. • Display range: 0 to 67108 sec	-	0
	Remarks: Indicates the elapsed time of engine operation after high speed operation (high speed fuel cut speed + 500 r/min or more) occurs.		

Engine oil temperature at engine start

Item name	Description/display range	Normal value	Freeze frame data output
[Initial Engine Oil Temp]	• Indicates the engine oil temperature at engine start. • Display range: -40 to 215°C {-40 to 419°F}	-	0

A/F idle learning value #1

Item name	Description/display range	Normal value	Freeze frame data output
[A/F Learn Value Idle #1]	• Indicates the air fuel ratio learning value for idle area (during direct injection). • Display range: -50 to 49.6%	-15 to 15%	0
	NOTE: Learning is performed in the idle area after warming-up (coolant temperature of 80°C {176°F} or more).		

A/F idle learning value #1 (Dual)

Item name	Description/display range	Normal value	Freeze frame data output
[A/F Learn Value Idle #1(Dual)]	• Indicates the air fuel ratio learning value in the idle area (controlled injection). • Display range: -50 to 49.6%	-15 to 15%:	0
	NOTE: Learning is performed in the idle area after warming-up (coolant temperature of 80°C {176°F} or more).		

A/F low load learning value #1

Item name	Description/display range	Normal value	Freeze frame data output
[A/F Learn Value Low #1]	• Indicates the air fuel ratio learning value for low load area (during direct injection). • Display range: -50 to 49.6%	-15 to 15%	0
	NOTE: Learning is performed after warming-up (coolant temperature of 80°C {176°F} or more) and in the low load area of four load areas controlled during driving.		

A/F middle load 1 learning value #1

Item name	Description/display range	Normal value	Freeze frame data output
[A/F Learn Value Mid1 #1]	• Indicates the air fuel ratio learning value in the middle load area 1 (controlled injection). • Display range: -50 to 49.6%	-15 to 15%	0
	NOTE: Learning is performed after warming-up (coolant temperature of 80°C {176°F} or more) and in the middle load area of four load areas controlled during driving.		

A/F high load learning value #1

Item name	Description/display range	Normal value	Freeze frame data output
[A/F Learn Value High #1]	• Indicates the air fuel ratio learning value for high load area (during direct injection). • Display range: -50 to 49.6%	-15 to 15%	0
	NOTE: Learning is performed after warming-up (coolant temperature of 80°C {176°F} or more) and in the high load area of four load areas controlled during driving.		

A/F low load learning value #1 Dual

Item name	Description/display range	Normal value	Freeze frame data output
[A/F Learn Value Low #1(Dual)]	• Indicates the air fuel ratio learning value in the low load area (controlled injection). • Display range: -50 to 49.6%	-15 to 15%	0
	NOTE: Learning is performed after warming-up (coolant temperature of 80°C {176°F} or more) and in the low load area of four load areas controlled during driving.		

A/F middle load 1 learning value #1 Dual

Item name	Description/display range	Normal value	Freeze frame data output
[A/F Learn Value Mid1 #1(Dual)]	• Indicates the air fuel ratio learning value in the middle load area 1 (controlled injection). • Display range: -50 to 49.6%	-15 to 15%	0
	NOTE: Learning is performed after warming-up (coolant temperature of 80°C {176°F} or more) and in the middle load area of four load areas controlled during driving.		

A/F high load learning value #1 Dual

Item name	Description/display range	Normal value	Freeze frame data output
[A/F Learn Value High #1(Dual)]	• Indicates the air fuel ratio learning value in the high load area (controlled injection). • Display range: -50 to 49.6%	-15 to 15%	0
	NOTE: Learning is performed after warming-up (coolant temperature of 80°C {176°F} or more) and in the high load area of four load areas controlled during driving.		

A/C magnetic clutch relay

Item name	Description/display range	Normal value	Freeze frame data output
[A/C Magnetic Clutch Relay]	A/C magnetic clutch relay: ON/OFF	ON: A/C ON	0

Electric fan relay No. 1

Item name	Description/display range	Normal value	Freeze frame data output
[Radiator Fan Relay #1]	• Indicates the operation of the radiator fan relay. • Display: ON/OFF	ON: Radiator fan (LO) operates.	0

Electric fan relay No. 2

Item name	Description/display range	Normal value	Freeze frame data output
[Radiator Fan Relay #2]	• Indicates the operation of the radiator fan relay. • Display: ON/OFF	ON: Radiator fan (HI) operates.	0

Brake override control

Item name	Description/display range	Normal value	Freeze frame data output
[Accel/Brake Pedal Control Status]	• Indicates the brake override control condition. • Display: ON/OFF	ON: Brake override control in progress	0

F/C with idle ON

Item name	Description/display range	Normal value	Freeze frame data output
[Idle Fuel Cut]	• Indicates that the fuel cut is operating. • Display: ON/OFF	ON: Fuel cut in progress	0
	Remarks: F/C with idle ON: ON • Throttle valve is fully closed. • Engine speed is high.		

F/C with low load

Item name	Description/display range	Normal value	Freeze frame data output
[FC TAU]	• Indicates that the fuel cut is operating with low load. • Display: ON/OFF	ON: Fuel cut in progress	0
	Remarks: Fuel cut is performed to avoid incomplete combustion.		

Immobilizer fuel cut state

Item name	Description/display range	Normal value	Freeze frame data output
[Immobilizer Fuel Cut]	• Indicates the condition of the immobilizer fuel cut. • Display: ON/OFF	-	0

Immobilizer fuel cut record

Item name	Description/display range	Normal value	Freeze frame data output
[Immobilizer Fuel Cut History]	• Indicates the record of the immobilizer fuel cut. • Display: ON/OFF	-	0

Estimated fuel dilution amount

Item name	Description/display range	Normal value	Freeze frame data output
[Fuel dilution quantity estimated value]	• Indicates the estimated fuel dilution amount. • Display range: 0 to 1279.9 ml	-	0

17. Compression

Engine speed of Cyl #1 to #4

Item name	Description/display range	Normal value	Freeze frame data output
[Engine Speed of Cyl #1] [Engine Speed of Cyl #2] [Engine Speed of Cyl #3] [Engine Speed of Cyl #4]	• Indicates the engine speed during fuel cut per cylinder. • Display range: 0 to 51199 r/min	-	0
	Remarks: • Indicates the engine speed when measurement of engine speed for each cylinder in [Active Test] is performed. (Normally, 0 r/min is displayed.) • The engine speed during cranking is measured for each cylinder. • When compression leakage occurs, the cylinder stop engine speed of the relevant cylinder becomes high. NOTE: If compression leakage occurs in the multiple cylinders, the cylinder stop engine speed becomes high, and it is possible to determine which cylinder has a compression leakage. However, the cylinder with the highest speed is not always the one with the lowest compression. (This is because the poorly-compressed cylinder and well-compressed cylinder have an influence on engine speed of each another.) Therefore, it is necessary to measure the compression actually, and determine which cylinder causes a large compression leakage.		

Average engine speed in all cylinders

Item name	Description/display range	Normal value	Freeze frame data output
[Av Engine Speed of All Cyl]	• Indicates the average engine speed of all cylinders. • Display range: 0 to 51199 r/min	-	0
	Remarks: Indicates the engine speed when measurement of engine speed for each cylinder in [Active Test] is performed. (Normally, 0 r/min is displayed.)		

18. Automatic transaxle

Engine warning light illumination request (ECT →EFI)

Item name	Description/display range	Normal value	Freeze frame data output
[MIL Request Status]	• Indicates the illumination status of the engine warning light. • Display: Lighting instructions/No Lighting instructions	-	×
	Remarks: When illumination request is received from ECT, [Lighting instructions] is displayed.		

Gear position (ECT →EFI)

Item name	Description/display range	Normal value	Freeze frame data output
[Gear Signal]	• Indicates the gear position (shift). • Display range: 0 to 255 speed	Shifted into each gear position: Driving	×
	Remarks: When abnormal, ECT system malfunction may exist.		

Turbine speed (ECT →EFI)

Item name	Description/display range	Normal value	Freeze frame data output
[AT turbine speed]	• Indicates input speed. • Display range: 0 to 12750 r/min	Almost the same as idle speed: When lock-up	×

Lock-up condition (ECT →EFI)

Item name	Description/display range	Normal value	Freeze frame data output
[AT Lock up status]	• Indicates the lock-up condition. • Display: ON/OFF	ON: When lock-up	×

Shift position P range

Item name	Description/display range	Normal value	Freeze frame data output
[Shift SW Status (P Range)]	• Indicates the shift lever P position. • Display: ON/OFF	ON: Shift lever P	×

Shift position R range

Item name	Description/display range	Normal value	Freeze frame data output
[Shift SW Status (R Range)]	• Indicates the shift lever R position. • Display: ON/OFF	ON: Shift lever R	×

Shift position N range

Item name	Description/display range	Normal value	Freeze frame data output
[Shift SW Status (N Range)]	• Indicates the shift lever N position. • Display: ON/OFF	ON: Shift lever N	×

Manual switch

Item name	Description/display range	Normal value	Freeze frame data output
[Manual SW]	• Indicates the condition of the transmission control switch (M). • Display: ON/OFF	ON: Shift lever “M”	×

Shift position D range

Item name	Description/display range	Normal value	Freeze frame data output
[Shift SW Status (D Range)]	• Indicates the shift lever D position. • Display: ON/OFF	ON: Shift lever D, M, “+” or “-”	×

Ignition timing retard angle request (ECT →EFI)

Item name	Description/display range	Normal value	Freeze frame data output
[Retard Signal from AT]	• Indicates the ignition timing retard angle request. • Display: ON/OFF	-	0

Fuel cut request (ECT →EFI)

Item name	Description/display range	Normal value	Freeze frame data output
[Fuel Cut signal from AT]	• Indicates the fuel cut request. • Display: ON/OFF	-	0

Torque down prohibition request (EFI →ECT)

Item name	Description/display range	Normal value	Freeze frame data output
[Stop torque decrease with AT]	• Indicates the torque down prohibition request. • Display: [Permission/Prohibition]	-	0

19. Vehicle driving data 5

Torque down request (VSC →EFI)

Item name	Description/display range	Normal value	Freeze frame data output
[Request Torque Down VDC]	• Indicates the torque down request. • Display: ON/OFF	-	0

Torque up request (VSC →EFI)

Item name	Description/display range	Normal value	Freeze frame data output
[Request torque increase with VDC]	• Indicates the torque up request. • Display: ON/OFF	-	0

ES

Torque down prohibition request (EFI →VSC)

Item name	Description/display range	Normal value	Freeze frame data output
[Ban of Torque Down]	• Indicates the torque down prohibition request. • Display: [Permission/Prohibition]	-	0

Torque up prohibition request (EFI →VSC)

Item name	Description/display range	Normal value	Freeze frame data output
[Stop torque increase with VDC]	• Indicates the torque up prohibition request. • Display: [Permission/Prohibition]	-	0

20. Active test

NOTE:

By performing [Active Test] using the SSM4, the vacuum switching valve or actuator can be operated without removing the adjacent parts. When performing [Active Test] in the initial stage of the troubleshooting, the diagnosis time can be reduced.

(1) Warm up the engine.
(2) Turn the ignition switch to OFF.
(3) Connect the SSM4 to the DLC3.
(4) Turn the ignition switch to ON.
(5) Follow the SSM4 on-screen instructions to perform [Active Test].

Item name	Test contents	Control range	Remarks
Fuel injection volume	Switching of direct injection and port injection, and increase/decrease in fuel injection amount	Port injection/direct injection/control-dependent injection -12.5 to 24.8%	• All injectors can be tested simultaneously. • Perform active test at engine coolant temperature of 80°C {176°F} or more and with the engine speed of less than 3000 r/min. • Fuel injection volume can be changed in a step-by-step manner within the control range. • Statuses of air/fuel ratio sensor and oxygen sensor can be checked by increasing/decreasing the fuel injection volume. • Select [Active Test] - [Cylinder Fuel Rate], and read the voltage in [A/F Sensor #11] and [Oxygen sensor #12]. • During performing the active test, the feedback control is disabled.
Purge VSV	Purge VSV operation	ON/OFF	• Duty ratio at ON: 30 % • Active test restrictions – IG ON
A/C Compressor Relay	A/C relay operation	ON/OFF	Active test restrictions – Engine stop, IG ON – Shift position P or N
ELCM pump	Pump operation	ON/OFF	• Active test restrictions – Not during requirement for evaporative system leak test
ELCM switching valve	Switching valve operation	Open/close	• Active test restrictions – Not during requirement for evaporative system leak test
Radiator fan relay	Radiator fan relay operation	ON/OFF	Active test restrictions – IG ON
Target fuel pressure	Increase/decrease of fuel pressure	-12.5 to 24.8%	Active test restrictions – Engine speed is 3000 r/min or less.
Fuel Injection Period (Injector #1)	Increase/decrease in fuel injection period	-16 to 15.9°CA	Active test restrictions – During idling – Shift position P or N

Item name	Test contents	Control range	Remarks
Fuel Injection Period (Injector #2)	Increase/decrease in fuel injection period	-16 to 15.9°CA	Active test restrictions – During idling – Shift position P or N
Fuel Injection Period (Injector #3)	Increase/decrease in fuel injection period	-16 to 15.9°CA	Active test restrictions – During idling – Shift position P or N
Fuel Injection Period (Injector #4)	Increase/decrease in fuel injection period	-16 to 15.9°CA	Active test restrictions – During idling – Shift position P or N
Fuel Injection Period (all injectors)	Increase/decrease in fuel injection period	-16 to 15.9°CA	Active test restrictions – During idling – Shift position P or N
ACC cut relay	ACC cut relay operation	ON/OFF	Active test restrictions – Engine stop, IG ON – Shift position P or N
Control the ETCS Open/Close (Slow)	Throttle Valve Operation (Slow)	Throttle open/throttle closed	Active test restrictions – Engine stop, IG ON – Shift position P – Accelerator pedal is fully open
Control the ETCS Open/Close (Fast)	Throttle Valve Operation (Fast)	Throttle open/throttle closed	Active test restrictions – Engine stop, IG ON – Shift position P – Accelerator pedal is fully open
Power balance (injection stop)	Switching of direct injection and port injection for each cylinder, and stop of fuel injection	Port injection/direct injection/control-dependent injection Fuel injection stop Injector #1/Injector #2/ Injector #3/ Injector #4	Active test restrictions – Engine speed is 3000 r/min or less. – Engine coolant temperature at 80°C {176°F} or more – Shift position P or N
Power balance (fuel injection stop)	Switching of direct injection and port injection for each cylinder, and stop of fuel injection and ignition cycle	Port injection/direct injection/control-dependent injection Stop of injection and ignition Injector #1/Injector #2/ Injector #3/ Injector #4	Active test restrictions – During idling – Shift position P or N – Vehicle speed sensor normal
Control the All Cylinders Fuel Cut	Stop of fuel injection to all cylinders	ON	• It is possible to check the ignition system for abnormality by stopping the fuel injection during startup cycle and allowing ignition operation only. • Active test restrictions – During idling – Shift position P or N – Vehicle speed sensor normal
Check the Cylinder Compression*1	Measuring the engine speed during cranking	ON	• When the active test is performed, the fuel injection and ignition for all cylinders are stopped. • Active test restrictions – During idling – Shift position P or N – Vehicle speed sensor normal
Alternator control	Increase/decrease in the alternator generation request voltage.	12.8 to 14.1 V	Active test restrictions – While engine running – Shift position P or N
Injection mode change	Switching of injection mode	Control-dependent injection/port injection/direct injection	• Active test restrictions – During idling – Engine coolant temperature at 80°C {176°F} or more – Shift position P or N • Total port injection time: Within 3 minutes
Fuel pump duty	Switching of fuel pump duty ratio	1%/90%	Active test restrictions – Engine stop, IG ON – Shift position P or N
Starter cut relay	Starter cut relay operation	ON/OFF	Active test restrictions – Engine stop, IG ON – Shift position P or N

Item name	Test contents	Control range	Remarks
Target engine speed	Increase/decrease in engine speed	500 to 2000 r/min	Active test restrictions – Vehicle stop condition – During idling – Vehicle status normal
Control the VVT Linear (Bank2)*1	Oil control valve operation	-27 to 36°CA	• When the active test is performed: Engine stalls, rough idling • Active test restrictions – Vehicle stop condition – During idling
Control the VVT Linear (Bank2)*2	Oil control valve operation	-27 to 36°CA	• When the active test is performed: Engine stalls, rough idling • Active test restrictions – Vehicle stop condition – During idling
Control the VVT Exhaust Linear (Bank1)	Oil control valve operation	0 to 51°CA	• When the active test is performed: Engine stalls, rough idling • Active test restrictions – Vehicle stop condition – During idling
Control the VVT Exhaust Linear (Bank2)	Oil control valve operation	0 to 51°CA	• When the active test is performed: Engine stalls, rough idling • Active test restrictions – Vehicle stop condition – During idling

NOTE:

- *1: In this active test, fuel injection and ignition for all cylinders are stopped, cranking is performed for approx. 10 seconds, and engine speed for each cylinder is measured.
- *2: This active test is performed after DTC has been cleared. (Refer to ES - 28)

21. Measurement of engine speed for each cylinder

    NOTE:

    Measure the engine speed for each cylinder at engine startup.

    When this active test is performed, the fuel injection and ignition for all cylinders are stopped. Crank the engine for approx. 10 seconds and read the measurement. When the engine speed for one cylinder is higher than the others, failure in compression pressure for the cylinder may occur.

    (1) Warm up the engine.
    (2) Turn the ignition switch to OFF.
    (3) Connect the SSM4 to the DLC3.
    (4) Turn the ignition switch to ON.
    (5) Select the following menu items using the SSM4. : [Each System] / [Engine Control System] / [Work Support] / [Active Test] / [Check the Cylinder Compression]
    (6) When the engine is stopped, select [ON].
    (7) Crank the engine for approx. 10 seconds.
    (8) Read [Engine Speed of Cyl #1 to #4] and [Av Engine Speed of All Cyl] displayed on the SSM4.

        CAUTION:

        - Do not crank the engine for 20 seconds or more.
        - In order to perform the test again after performing the active test, return to the active test menu screen, and perform the test again.
        - Use fully charged battery.
        - Cranked without selecting [ON], the engine starts.
        - When the active test is performed, DTC P1604 (startup failure), etc. may be detected.
        - After performing the active test, be sure to check and clear DTC(s). (Refer to ES - 28)

VVT initial position learning value display

1. VVT initial position learning value display

    NOTE:

    Displays the VVT initial position learning value used in the self-diagnosis for VVT. This value is also used for calculating the reference value in the troubleshooting of DTC (P0016, etc.).

Concerning the learning value, the value for the crankshaft position initially input at the production factory is recorded as the normal value, and thereafter it is updated whenever normal judgment occurs. When the timing chain is suddenly displaced during operation or when there is wrong assembly during repair work, this will cause abnormal judgment, and the learning value is not updated.

(1) Warm up the engine, and let it idle for 5 minutes or more.
(2) Turn the ignition switch to OFF.
(3) Connect the SSM4 to the DLC3.
(4) Turn the ignition switch to ON.
(5) Select the following menu items using the SSM4. : [Each System] / [Engine Control System] / [Work Support] / [Active Test] / [VVT Initial Position Learning Value Display]
(6) Read each learning value.

2. List of VVT initial position learning value display

Item	Display	Unit
VVT initial position learning value (bank 1)	[VVT Initial Position Learning Value #1]	°FR
VVT initial position learning value (bank 2)	[VVT Initial Position Learning Value #2]	°FR
Exhaust VVT initial position learning value (bank 1)	[VVT Ex Initial Position Learning Value #1]	°FR
Exhaust VVT initial position learning value (bank 2)	[VVT Ex Initial Position Learning Value #2]	°FR

Failsafe list

If any of the following codes is recorded, the ECM enters fail-safe mode.

DTC	Fail safe operation	Fail safe mode cancel condition
P000A P000C P0010 P0011 P0016 P0018 P0020 P0021 P0341 P0345 P0346	Intake VVT control is fixed in the mid position.	After restored to normal condition, turn IG ON again.
P000B P000D P0013 P0014 P0017 P0019 P0023 P0024 P0365 P0366 P0390 P0391	Exhaust VVT control is fixed at the maximum advanced angle position.	After restored to normal condition, turn IG ON again.
P0031 P0032 P0131 P0132 P0134	Air/fuel ratio feedback control is prohibited.	After restored to normal condition, turn IG ON again.
P0037 P0137 P0138 P013A P013B P013E P013F P0141	Air/fuel ratio feedback control is prohibited.	Restoration to normal condition
P0087 P0088 P0191 P0192 P0193 P1235	• Fuel pump ASSY (high-pressure side) operation is prohibited. • Fuel pressure is fixed at 0.4 MPa. • Fuel supply is shut off when RPM is 1500 or more.	After restored to normal condition, turn IG ON again.

ES

DTC	Fail safe operation	Fail safe mode cancel condition
P0101 P0102 P0103	Engine load is set to converted estimation value of intake manifold pressure.	Restoration to normal condition
P0068 P0107 P0108	Intake manifold pressure is set to converted estimation value of air flow meter.	Restoration to normal condition
P0111 P0112 P0113	Intake air temperature is restored to normal condition of 20°C {68°F}.	Restoration to normal condition
P0116 P0117 P0118 P0125	• Coolant temperature is at 70°C {158°F} • Intake and exhaust VVT are prohibited.	Restoration to normal condition
P0172	Purge control is prohibited.	Restoration to normal condition
P0196 P0197 P0198	Engine oil temperature is at 70°C {158°F}	Restoration to normal condition
P062D	• Fuel supply is shut off when RPM is 1500 or more. • Fuel supply to abnormal cylinders is shut off.	Clear the DTC.
P0201 P0202 P0203 P0204 P1261 P1262 P1263 P1264	• Fuel supply is shut off when RPM is 1500 or more. • Fuel supply to abnormal cylinders is shut off.	After restored to normal condition, turn IG ON again.
P062F P0122 P0123 P0222 P0223 P0604 P0605 P0606 P060A P060B P1160 P2101 P2102 P2103 P2109 P2119 P2135	Electronic throttle control is prohibited and throttle opening angle is fixed.	After restored to normal condition, turn IG ON again.
P0327 P0328 P0332 P0333	Ignition timing is retarded maximum level	Restoration to normal condition
P0451	Leak detection pump control is prohibited.	Restoration to normal condition
P2158	Vehicle speed identified by ECM is fixed at 10km/h {6.2 MPH}.	Restoration to normal condition
P0851 P0852	Gear position indicator in the combination meter is turned off (for MT models).	Restoration to normal condition
P1451 P2404	Atmospheric pressure is fixed at 101.3 kPa {760 mmHg}.	Restoration to normal condition
P2122 P2123 P2127 P2128	Normal accelerator pedal position sensor is used alternatively until the specified angle is reached.	After restored to normal condition, turn IG ON again.
P2138	• Accelerator pedal opening angle is fixed. • Electronic throttle control is prohibited and throttle opening angle is fixed.	After restored to normal condition, turn IG ON again.

DTC	P000A	A Camshaft Position Slow Response (Bank 1)
DTC	P000C	A Camshaft Position Slow Response (Bank 2)
DTC	P0011	Camshaft Position "A" - Timing Over-Advanced or System Performance (Bank 1)
DTC	P0021	Camshaft Position "A" - Timing Over-Advanced or System Performance (Bank 2)

ES

Circuit description

The VVT system consists of engine control computer, camshaft timing oil control valve ASSY, intake cam sprocket, and exhaust cam sprocket. This VVT system controls the intake cam sprocket and the exhaust cam sprocket in order to provide the best valve timing according to a driving condition. This control is based on various conditions including mass air flow, throttle position, and engine coolant temperature. The engine control computer, based on signals from these sensors, adjusts the camshaft timing oil control valve ASSY. As a result, the optimal relative position of the intake camshaft is obtained, thus providing better fuel efficiency, superior output performance, and better emission performance. Also, the engine control computer detects the actual valve timing through the signal from the camshaft position sensor and performs feedback control to provide the most suitable valve timing.

VVT system:

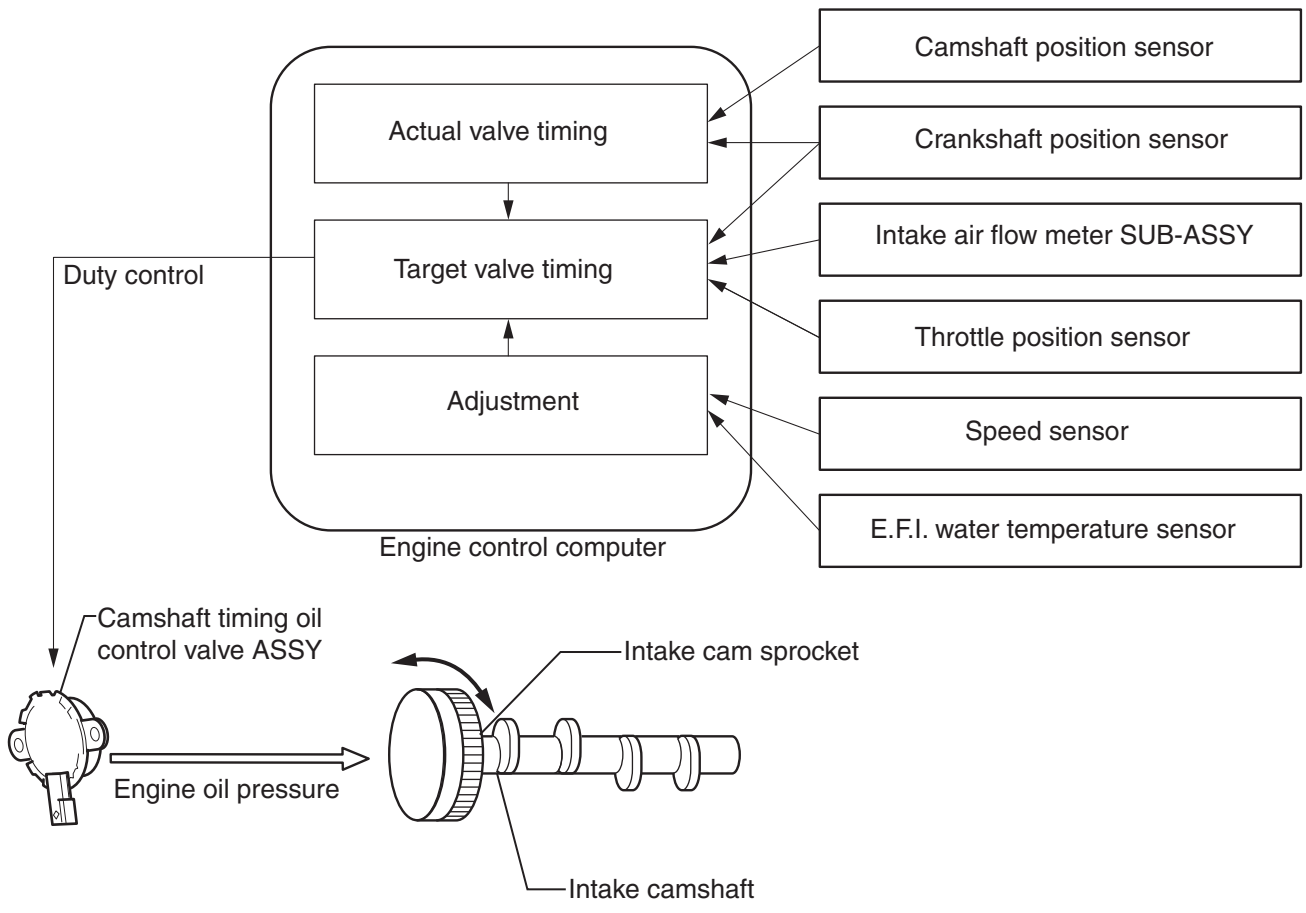

DTC No.	DTC detection condition	Suspected parts
P000A	25-second accumulation of deviation between the target intake valve timing and the actual intake valve timing exceeds the threshold (bank 1). (2 trips detection logic)	•Valve timing •Camshaft timing oil control valve ASSY RH (intake side) •Oil control valve filter •Intake cam sprocket (bank 1) •ECM
P0011	A deviation between the target intake valve timing and the actual intake valve timing exceeds the threshold (bank 1). (2 trips detection logic)	
P000C	25-second accumulation of deviation between the target intake valve timing and the actual intake valve timing exceeds the threshold (bank 2). (2 trips detection logic)	•Valve timing •Camshaft timing oil control valve ASSY LH (intake side) •Oil control valve filter •Intake cam sprocket (bank 2) •ECM
P0021	A deviation between the target intake valve timing and the actual intake valve timing exceeds the threshold (bank 2). (2 trips detection logic)	

ES

MONITOR DESCRIPTION

The ECM optimizes intake valve timing using the variable valve timing (VVT) system to control the intake camshaft. The VVT system consists of ECM, cam timing oil control valve ASSY, and the VVT controller (intake cam sprocket). The ECM sends the target duty cycle control signal to the camshaft timing oil control valve ASSY. In response to this control signal, the oil pressure supplied to the VVT controller is adjusted. The VVT controller advances or retards the intake camshaft.

When a difference between the target intake valve timing and the actual intake valve timing is large, and the amount of change in the actual intake valve timing is small, the ECM judges this condition as stuck in VVT controller and stores the DTC.

The DTCs indicate failure in camshaft timing oil control valve ASSY or VVT controller operation failure due to intrusion of foreign objects into the camshaft oil control valve ASSY.

Monitor strategy

Related DTCs	P000A: VVT intake method with mid-position start functional check (Bank 1) P000C: VVT intake method with mid-position start functional check (Bank 2) P0011: VVT intake method with mid-position start functional check (Bank 1) P0021: VVT intake method with mid-position start functional check (Bank 2)
Required Sensors/Components (Main)	Camshaft timing oil control valve ASSY Intake cam sprocket
Required Sensors/Components (Related)	Crankshaft position sensor Camshaft position sensor E.F.I. water temperature sensor
Frequency of Operation	Continuous
Duration	Less than 1 second: P000A, P000C 7 seconds: P0011, P0021 (target error) 1.5 seconds: P0011, P0021 (mid-lock position)
MIL Operation	2 operation cycle
Sequence of Operation	None

TYPICAL ENABLING CONDITIONS

All

Overlap prohibited DTC	P0340, P0345 (camshaft position sensor - intake with variable valve timing (VVT))

Battery Voltage	10.9V or more

P000A, P000C

VVT feedback control	Control in progress
Change in VVT target angle within 64 msec	Less than 3.2°CA
|VVT target angle|	Greater than 10°CA

P0011, P0021 (target error)

VVT feedback control	Control in progress
|VVT target angle|	Greater than 10°CA

P0011, P0021 (mid-lock position)

Elapsed time after starting the engine	More than 0.5 seconds and 37 seconds or less (May change depending on engine coolant temperature)
Engine speed	500 RPM or more

TYPICAL MALFUNCTION THRESHOLDS

P000A, P000C

Σ (VVT target position - actual VVT position)	Greater than 4000°CA or less than -4000°CA

P0011, P0021 (target error)

|VVT target position - actual VVT position|	Greater than 10°CA

P0011, P0021 (mid-lock position)

|VVT target position - actual VVT position|	Greater than 10°CA

Monitoring result

Refer to [Monitor Status Check] (Refer to ES - 24)

Circuit figure

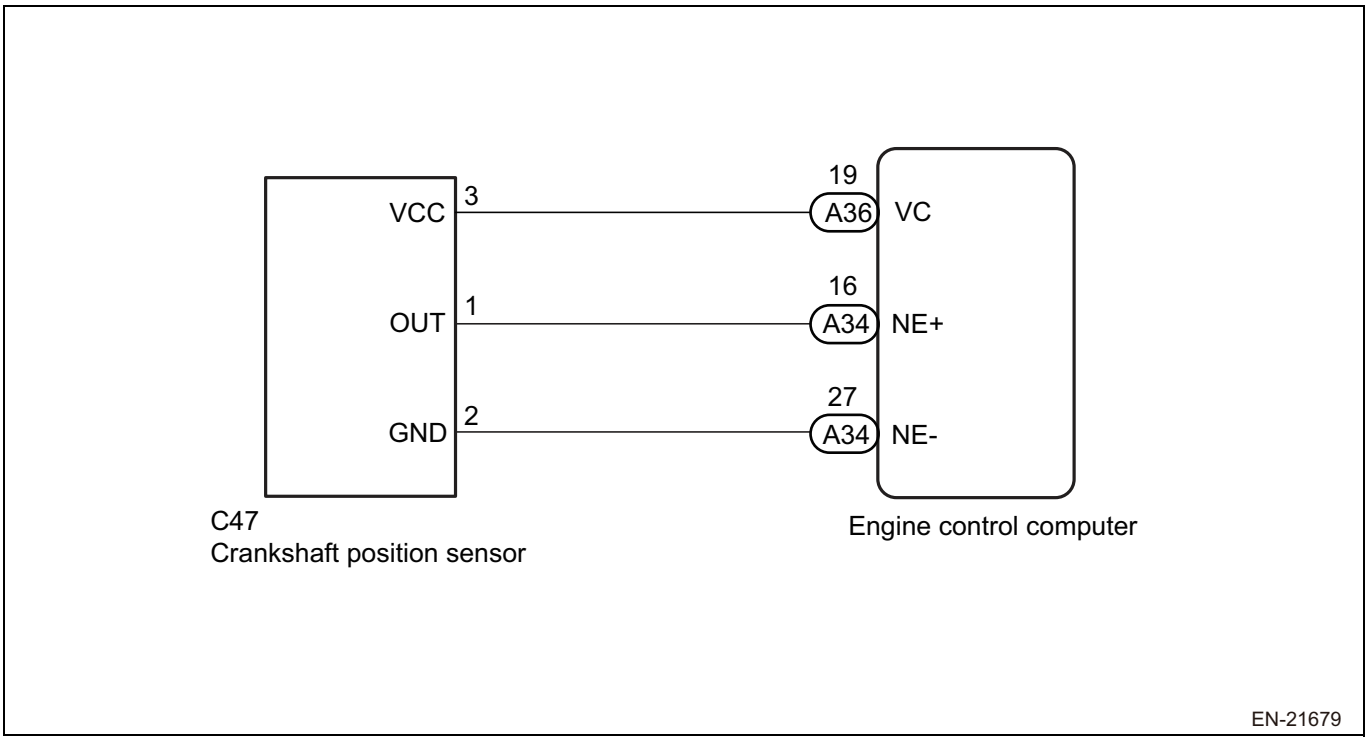

ES

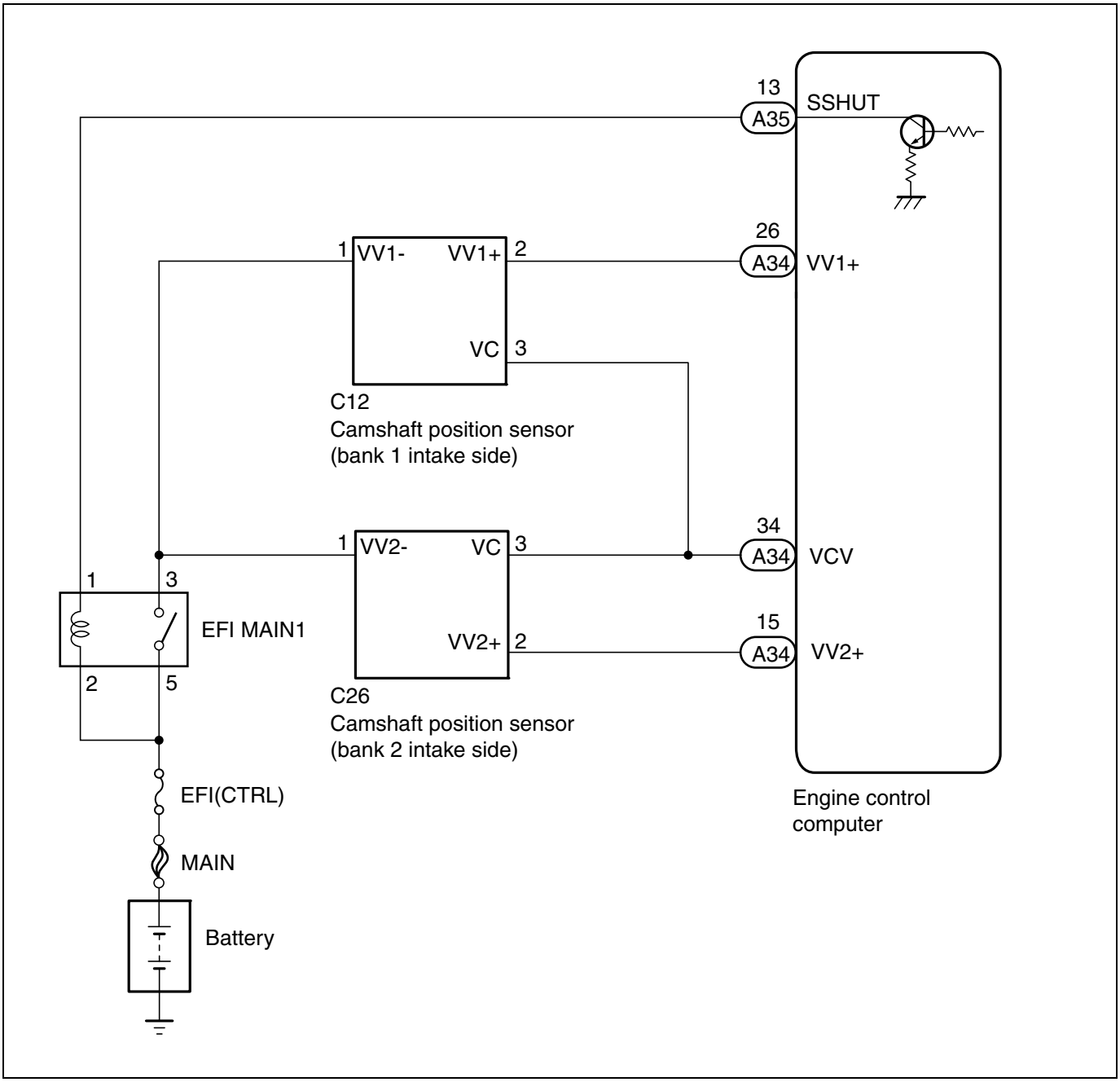
13
A35
SSHUT
26
A34
VV1+
1
VV1-
VV1+
2
VC
3
C12
Camshaft position sensor
(bank 1 intake side)
34
A34
VCV
1
VV2-
VC
3
15
A34
VV2+
VV2+
2
1
3
EFI MAIN1
2
5
C26
Camshaft position sensor
(bank 2 intake side)
EFI(CTRL)
MAIN
Battery
Engine control
computer

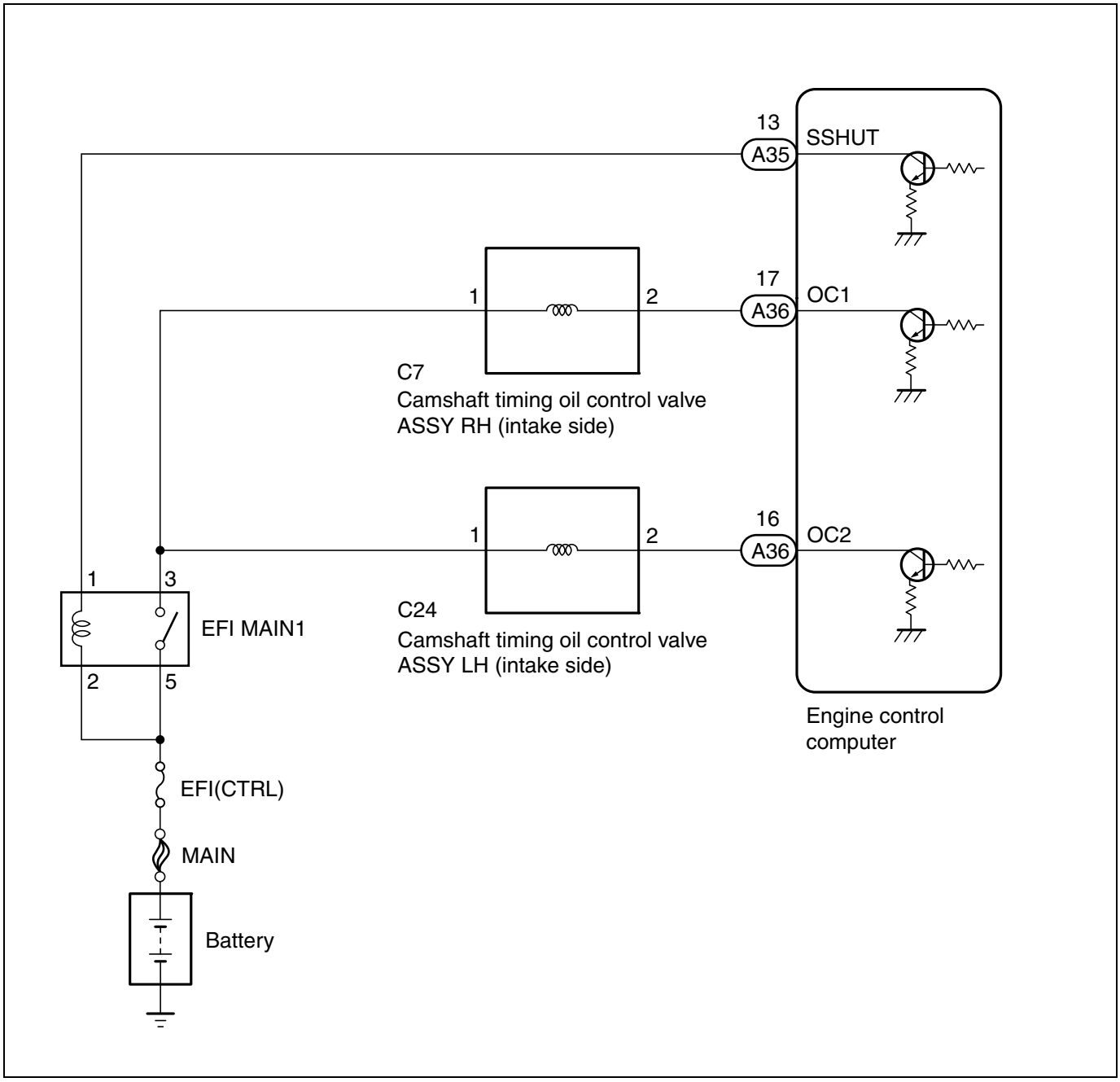

Description of functions

Test drive

Perform test drive to check if the DTC recurs.

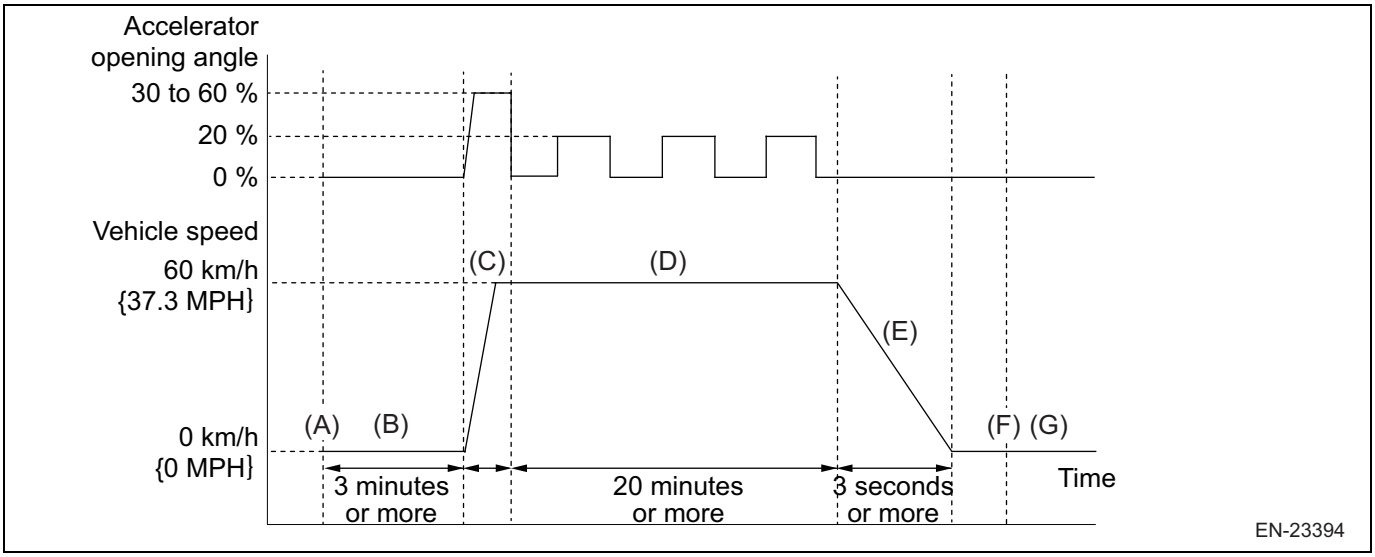

1. Connect the SSM4 to the DLC3.
2. Turn the ignition switch to ON.
3. Turn on the SSM4.
4. Follow the SSM4 on-screen instructions to clear the DTCs. (Refer to ES - 28)
5. Turn the ignition switch to OFF, and wait for 30 seconds.
6. Turn the ignition switch to ON.
7. Turn on the SSM4.
8. Start the engine and let it warm up until the engine coolant temperature stabilizes. (at 75°C {167°F} or more).
9. Perform driving test as follows.

   WARNING:
   - To perform this driving test, two people (a driver and checker) should be on the vehicle, and the data should be checked by a checker.
   - When performing this driving test, always observe the applicable traffic laws such as the speed limit.

   NOTE:

   The vehicle may be driven at accelerated/constant speed according to road conditions.

   (a) Start the engine after warming up the engine (coolant temperature of 75°C (167°F) or more). (A)

   (b) Idle the engine for 3 minutes or more. (B)

   (c) Accelerate to 60 km/h {37.3 MPH}. (C)

   (d) While maintaining 60 km/h {37.3 MPH}, repeat the accelerator pedal opening angle 0 % (5 seconds) ←→20 % (5 seconds) for 20 minutes or more. (D)

   This test requires 2 people. One person operates the reproduction mode while the other one monitors the diagnostic values. Continue monitoring the values as they are not stored.

   (e) Decelerate for 5 seconds or more at the accelerator pedal opening angle 0 %. (E) Leaning is performed during this operation.

   (f) Stop the vehicle, and check the SSM data while the vehicle is idling. (Learning value and ·diagnostic value) (F)

   NOTE:

   When the diagnostic value is 0, the diagnosis is incomplete. Therefore, do not stop the engine, and perform the test driving again.

   (g) If the values in (f) are normal, stop the engine. (G)
10. Turn the ignition switch to ON.
11. Turn on the SSM4.
12. Follow the SSM4 on-screen instructions to check the DTC. (Refer to ES - 28)

Inspection steps

NOTE:

Bank	Abnormal timing advancement
Bank 1 (intake side)	P000A P0011

Bank	Abnormal timing advancement
Bank 2 (intake side)	P000C P0021

- Read the freeze frame data using the SSM4. A part of the engine running conditions under which the engine trouble occurred is recorded in the freeze frame data, which is useful for troubleshooting.
- Bank 1 shows the side where No. 1 cylinder is located.
- Bank 2 shows the side where No. 2 cylinder is located.

1	Reading diagnostic codes

(1) Connect the SSM4 to the DLC3.
(2) Turn the ignition switch to ON.
(3) Turn on the SSM4.
(4) Follow the SSM4 on-screen instructions to check the DTC. (Refer to ES - 28)

Result

Result	Go to
Either P000A, P000C, P0011, or P0021 is output.	A
Either P000A, P000C, P0011, or P0021 and other diagnostic codes are output.	B

NOTE:
- If any diagnostic codes other than P000A, P000C, P0011 or P0021 are output, troubleshoot them first.
- When a diagnostic code is output, store the freeze frame data. (Refer to ES - 28)

B → Progress to the relevant diagnosis code chart (Refer to ES - 12)

A

2	Check of engine oil condition

(1) Check the engine oil condition.
NOTE:
Check the following items.
- Oil quantity within the specified rage
- Occurrence of abnormal contamination
- Solidity due to additive agent
- Use of oil with specified viscosity

NG → Adjustment of oil quantity, or replacement of engine oil and oil filter (Refer to LU - 4) Go to step 3

OK

3	Check of on-board monitor test result

(1) Replace the camshaft timing oil control valve ASSY (intake side) on the bank where trouble was detected through the diagnostic code. (Refer to ES - 660)
(2) Connect the SSM4 to the DLC3.
(3) Turn the ignition switch to ON.
(4) Turn on the SSM4.

(5) Follow the SSM4 on-screen instructions to clear the DTCs. (Refer to ES - 28)
(6) Perform test drive. (Refer to "Test drive" under "Description of functions")
WARNING:
When performing this driving test, always observe the applicable traffic laws such as the speed limit.
(7) Using SSM4, read [VVT monitor bank 1] and [VVT monitor bank 2] of mode 06. (Refer to ES - 24)
WARNING:
- To perform this driving test, two people (a driver and checker) should be on the vehicle, and the data should be checked by a checker.
- When performing this driving test, always observe the applicable traffic laws such as the speed limit.

NOTE:
- When the diagnostic value is 0, the diagnosis is incomplete. Therefore, do not stop the engine, and perform the test driving again.
- The diagnostic value is updated repeatedly. Therefore, keep checking the data constantly during the diagnostic value reading is in progress.

(8) Record the values of the read [VVT monitor bank 1] and [VVT monitor bank 2].

Result

Diagnostic codes	Item	Result	Go to
P000A, P0011	Value of [VVT monitor bank 1] of the replaced camshaft timing oil control valve ASSY	Less than 1000	A
		1000 or more	B
P000C, P0021	Value of [VVT monitor bank 2] of the replaced camshaft timing oil control valve ASSY	Less than 1000	A
		1000 or more	B

B → Go to Step 5.

A

4	Check of on-board monitor test result

(1) Compare the values of [VVT monitor bank 1] and [VVT monitor bank 2] recorded in step 3.

Standard value

Diagnostic codes	Item	Result	Go to
P000A, P0011	Value of [VVT monitor bank 1]	1000 or less, and larger than the value of [VVT monitor bank 2] (by the value of [VVT monitor bank 2] ×1.5+100)	A
		1000 or less, and smaller than the value of [VVT monitor bank 2] (by the value of [VVT monitor bank 2] ×1.5+100)	B
P000C, P0021	Value of [VVT monitor bank 2]	1000 or less, and larger by (the value of [VVT monitor bank 1] ×1.5+100) compared to the value of [VVT monitor bank 1]	A
		1000 or less, and smaller by (the value of [VVT monitor bank 1] ×1.5+100) compared to the value of [VVT monitor bank 1]	B

B → Idle of the engine for 5 minutes and replacement of oil filter and the engine oil (flushing) (Refer to LU - 4) Go to step 16

A

5	Check of harness and connector

(1) Check the harness and connector for bend, damage and poor contact.
NOTE:
Check the following items.
- Engine control computer (Refer to ES - 670)
- Camshaft timing oil control valve ASSY (Refer to ES - 660)
- Camshaft position sensor (Refer to ES - 678)
- Crankshaft position sensor (Refer to ES - 681)

NG → Repair or replacement of the faulty parts (Refer to ES - 660, ES - 670, ES - 678, and ES - 681) Go to step 6

OK

6	Check of harness and connector (open circuit)

NOTE:
For the inspection procedure and precautions for wiring harnesses and connectors, refer to IN - 36.
(1) Disconnect the connector for the engine control computer.
(2) Disconnect the camshaft timing oil control valve ASSY (intake side) connector.
(3) Measure the resistance between the terminals. (For terminal arrangement, refer to ES - 36.)

Resistance (open circuit check)

Diagnostic codes	Inspection terminals	Inspection conditions	Standard value
P000A, P0011	A36-17 (OC1) - C7-2	Always	Less than 1 Ω
P000C, P0021	A36-16 (OC2) - C24-2	Always	Less than 1 Ω

NG → To repair or replace the faulty parts, go to step 16.

OK

7	Check of harness and connector (open circuit)

NOTE:
For the inspection procedure and precautions for wiring harnesses and connectors, refer to IN - 36.
(1) Disconnect the connector for the engine control computer.
(2) Disconnect the connector for the camshaft position sensor (intake side).
(3) Measure the resistance between the terminals. (For terminal arrangement, refer to ES - 36.)

Resistance (open circuit check)

Diagnostic codes	Inspection terminals	Inspection conditions	Standard value
P000A, P0011	A34-26 (VV1+) - C12-2 (VV1+)	Always	Less than 1 Ω
P000C, P0021	A34-15 (VV2+) - C26-2 (VV2+)	Always	Less than 1 Ω

NG → To repair or replace the faulty parts, go to step 16.

OK

ES

8	Check of harness and connector (open circuit)

NOTE:
For the inspection procedure and precautions for wiring harnesses and connectors, refer to IN - 36.
(1) Disconnect the connector for the engine control computer.
(2) Disconnect the crankshaft position sensor connector.
(3) Measure the resistance between the terminals. (For terminal arrangement, refer to ES - 36.)

Resistance (open circuit check)

Inspection terminals	Inspection conditions	Standard value
A34-16(NE+) - C47-1(OUT)	Always	Less than 1 Ω

NG → To repair or replace the faulty parts, go to step 16.

OK

9	Check of engine oil pressure

(1) Check the engine oil pressure. (Refer to LU - 2)

Result

Result	Go to
Malfunction	A
Normal	B

B → Go to Step 12.

A

10	Check of oil strainer

(1) Check the oil strainer in the oil pan. (Refer to EM - 75)
Criteria: There is no clogging or adherence of foreign material.

Result

Result	Go to
Malfunction	A
Normal	B

B → Replace the chain cover. <Note> When assembling the chain cover, excess application of the liquid gasket may cause failure. Always use the type specified in the service manual, and apply proper amount (wire diameter). (Refer to LU - 25) Go to step 13

A

11	Cleaning of oil strainer

(1) Check and clean inside the oil strainer, and remove clogging and adherence of foreign matter.

Next

12	Check of oil passage of chain cover

(1) Remove the engine unit from the vehicle body. (Refer to EM - 75)
(2) Check the oil passage of the chain cover. (Refer to LU - 13)
NOTE:
Check the O-ring and entrance of foreign matter of the following oil passage.
- Inlet opening of oil pump
- Outlet opening of oil pump
- O-ring of each passage to left/right cylinder head
- Oil control valve ASSY
- Entrance of foreign matter

NG → Replace the faulty parts. Replacement of chain cover in the case of foreign matter entrance (Refer to LU - 13) Go to step 13

OK

13	Check of camshaft condition

(1) Remove the timing chain. (Refer to EM - 13)
(2) Turn the camshaft with your hand, and compare the rotational resistance of the four camshafts.
NOTE:
Compare the rotational resistance with that of the bank 2 (bank 1) camshaft, and check the bank 1 (bank 2) camshaft for definitive faults such as unsmoothness and rotational resistance.
- Adherence of foreign matter on camshaft
- Damage of camshaft (scratches, galling, wear, etc.)
- Check of influence due to camshaft journal bearing not rotating properly

NG → Replacement of cam carrier and camshaft (Refer to EM - 75, and EM - 31) Go to step 14

OK

14	Check of oil passage between oil pump and camshaft timing oil control valve ASSY

(1) Visually check the following oil passages between oil pump and camshaft timing oil control valve ASSY, and check for definitive faults such as adherence of foreign matter and clogging.
- Oil passage of cam carrier
- Oil passage on the cylinder head side
- Oil passage at the connection between the cam sprocket and cam shaft
- Oil passage of the cam sprocket back side and at the cam shaft top end with the cam sprocket removed

NOTE:
Refer to the removal procedure of the cam carrier in the service manual. (Refer to EM - 31)

NG

Eliminate the foreign matter. Replacement of oil filer for cam carrier (Do not reuse) (Refer to EM - 75) <Note> •When assembling the chain cover, excess application of the liquid gasket may cause failure. Always use the type specified in the service manual, and apply proper amount (wire diameter). (Refer to LU - 25) •Make sure that the oil filter is pushed so that the surface is flush with the cam carrier surface. (Do not push in excessively.) (Refer to EM - 75) <Reference> Let the engine idle for 5 minutes after finishing the procedure, and replace the oil filter and the engine oil (flushing). (Refer to LU - 4) Go to step 16

OK

15	Replacement of cam sprocket

(1) Replace the cam sprocket. (Refer to EM - 31)
CAUTION:
- When assembling the chain cover, excess application of the liquid gasket may cause failure. Always use the type specified in the service manual, and apply proper amount (wire diameter). (Refer to LU - 25)
- Make sure that the oil filter is pushed so that the surface is flush with the cam carrier surface. (Do not push in excessively.) (Refer to EM - 75)

Next

16	Check of on-board monitor test result

(1) Connect the SSM4 to the DLC3.
(2) Turn the ignition switch to ON.
(3) Turn on the SSM4.
(4) Follow the SSM4 on-screen instructions to clear the DTCs. (Refer to ES - 28)
(5) Turn the ignition switch to OFF, and wait for 30 seconds.
(6) Perform test drive. (Refer to "Test drive" under "Description of functions")

WARNING:
When performing this driving test, always observe the applicable traffic laws such as the speed limit.

(7) Using SSM4, read [VVT monitor bank 1] and [VVT monitor bank 2] of mode 06. (Refer to ES - 24)
WARNING:
- To perform this driving test, two people (a driver and checker) should be on the vehicle, and the data should be checked by a checker.
- When performing this driving test, always observe the applicable traffic laws such as the speed limit.

NOTE:
- When the diagnostic value is 0, the diagnosis is incomplete. Therefore, do not stop the engine, and perform the test driving again.
- The diagnostic value is updated repeatedly. Therefore, keep checking the data constantly during the diagnostic value reading is in progress.

(8) Record the values of the read [VVT monitor bank 1] and [VVT monitor bank 2].

Standard value

Diagnostic codes	Item	Result	Go to
P000A, P0011	Value of [VVT monitor bank 1]	Less than 1000	A
		1000 or more	B
P000C, P0021	Value of [VVT monitor bank 2]	Less than 1000	A
		1000 or more	B

B → Replacement of the engine control computer (Refer to ES - 670)

A

17	Checking diagnostic codes

(1) Compare the values of [VVT monitor bank 1] and [VVT monitor bank 2] recorded in step 16.

Standard value

Diagnostic codes	Item	Result	Go to
P000A, P0011	Value of [VVT monitor bank 1]	1000 or less, and smaller than the value of [VVT monitor bank 2] (by the value of [VVT monitor bank 2] ×1.5+100)	A
		1000 or less, and larger than the value of [VVT monitor bank 2] (by the value of [VVT monitor bank 2] ×1.5+100)	B
P000C, P0021	Value of [VVT monitor bank 2]	1000 or less, and smaller by (the value of [VVT monitor bank 1] ×1.5+100) compared to the value of [VVT monitor bank 1]	A
		1000 or less, and larger by (the value of [VVT monitor bank 1] ×1.5+100) compared to the value of [VVT monitor bank 1]	B

B → Replacement of the engine control computer (Refer to ES - 670)

A

Complete

DTC	P000B	B Camshaft Position Slow Response (Bank 1)
DTC	P000D	B Camshaft Position Slow Response (Bank 2)
DTC	P0014	Camshaft Position "B" - Timing Over-Advanced or System Performance (Bank 1)
DTC	P0024	Camshaft Position "B" - Timing Over-Advanced or System Performance (Bank 2)

ES

Circuit description

VVT system consists of engine control computer, camshaft timing oil control valve ASSY, and exhaust cam sprocket. The VVT system controls the exhaust cam sprocket in order to provide the optimal valve timing according to driving condition. This control is based on various conditions including mass air flow, throttle position, and engine coolant temperature. The engine control computer, based on signals from these sensors, adjusts the camshaft timing oil control valve ASSY. As a result, the optimal relative position of the exhaust camshaft is obtained, thus providing better fuel efficiency, superior output performance, and better emission performance. Also, the engine control computer detects the actual valve timing through the signal from the camshaft position sensor and performs feedback control to provide the most suitable valve timing.

VVT system:

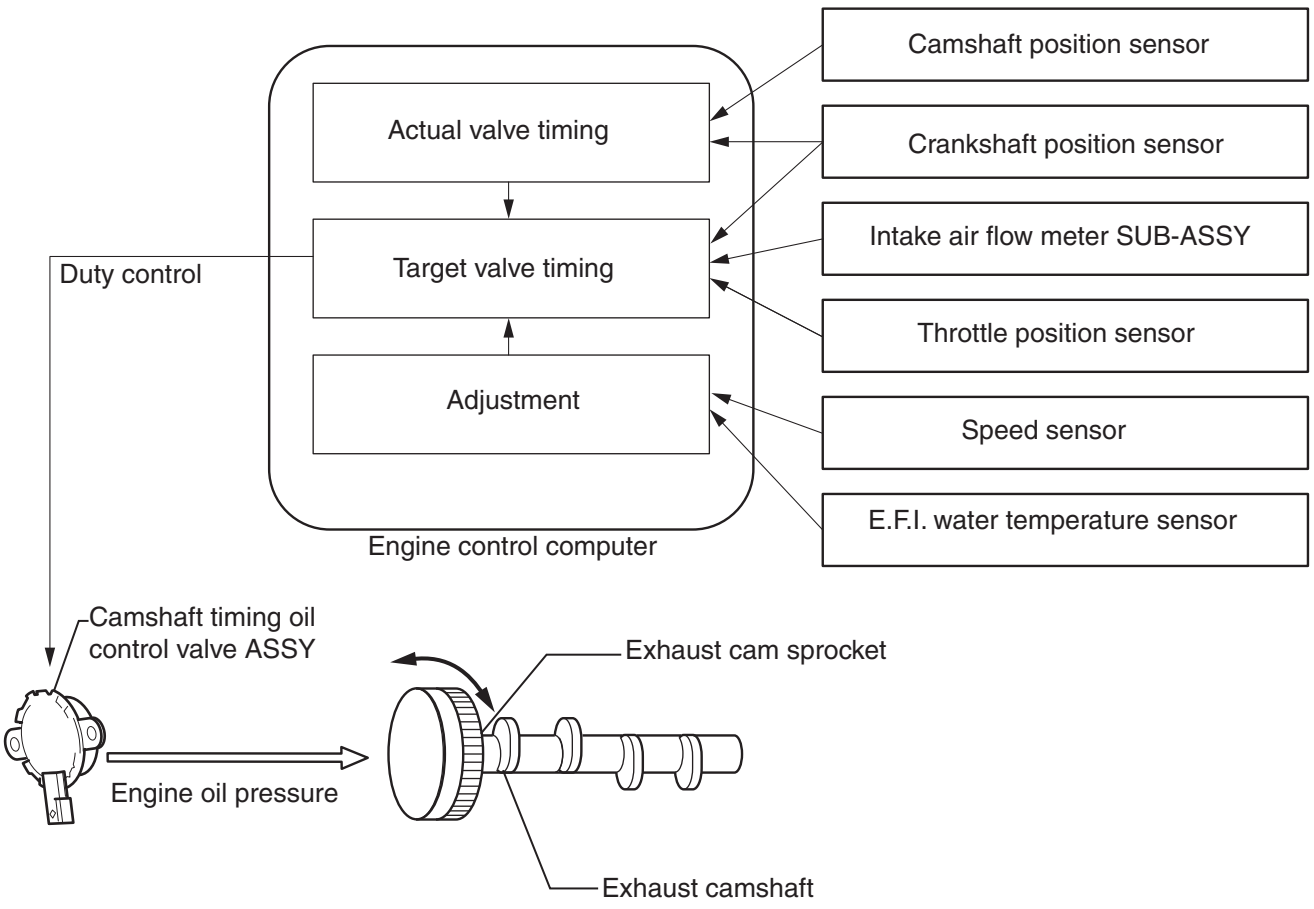

DTC No.	DTC detection condition	Suspected parts
P000B	25-second accumulation of deviation between the target exhaust valve timing and the actual exhaust valve timing exceeds the threshold (bank 1). (2-trip detection logic)	•Valve timing •Camshaft timing oil control valve ASSY RH (exhaust side) •Oil control valve filter (bank 1) •Exhaust cam sprocket (Bank 1) •ECM
P0014	A deviation between the target exhaust valve timing and the actual exhaust valve timing exceeds 8 seconds threshold (bank 1). (2-trip detection logic)	
P000D	25-second accumulation of deviation between the target exhaust valve timing and the actual exhaust valve timing exceeds the threshold (bank 2). (2-trip detection logic)	•Valve timing •Camshaft timing oil control valve ASSY LH (exhaust side) •Oil control valve filter (bank 2) •Exhaust cam sprocket (Bank 2) •ECM
P0024	A deviation between the target exhaust valve timing and the actual exhaust valve timing exceeds 8 seconds threshold (bank 2). (2-trip detection logic)	

MONITOR DESCRIPTION

The ECM optimizes exhaust valve timing using the variable valve timing (VVT) system to control the exhaust camshaft. The VVT system consists of ECM, cam timing oil control valve ASSY, and the VVT controller (exhaust cam sprocket). The ECM sends the target duty cycle control signal to the camshaft timing oil control valve ASSY.

In response to this control signal, the oil pressure supplied to the VVT controller is adjusted. The VVT controller advances or retards the exhaust camshaft.

When a difference between the target exhaust valve timing and the actual exhaust valve timing is large, and the amount of change in the actual exhaust valve timing is small, the ECM judges this condition as stuck in VVT controller and stores the DTCs.

Monitor strategy

Related DTCs	P000A: VVT intake method with mid-position start functional check (Bank 1) P000C: VVT intake method with mid-position start functional check (Bank 2) P0011: VVT intake method with mid-position start functional check (Bank 1) P0021: VVT intake method with mid-position start functional check (Bank 2)
Required Sensors/Components (Main)	Camshaft timing oil control valve Exhaust cam sprocket
Required Sensors/Components (Related)	Crankshaft position sensor Camshaft position sensor E.F.I. water temperature sensor
Frequency of Operation	Continuous
Duration	Less than 1 second: P000B, P000D 8 seconds: P0014, P0024
MIL Operation	2 operation cycle
Sequence of Operation	None

TYPICAL ENABLING CONDITIONS

All

Overlap prohibited DTC	P0365, P0390 (camshaft position sensor - exhaust with variable valve timing (VVT))
Battery Voltage	10.9V or more
VVT feedback control	Control in progress

P000B, P000D

Change in VVT target angle within 64 msec	Less than 3.2°CA
|VVT target angle|	Greater than 10°CA

P0014, P0024

|VVT target angle|	Greater than 15°CA

TYPICAL MALFUNCTION THRESHOLDS

P000B, P000D

Σ (VVT target position - actual VVT position)	Greater than 4000°CA or less than -4000°CA

P0014, P0024

|VVT target position - actual VVT position|	Greater than 15°CA

Monitoring result

Refer to [Monitor Status Check] (Refer to ES - 24)

Circuit figure

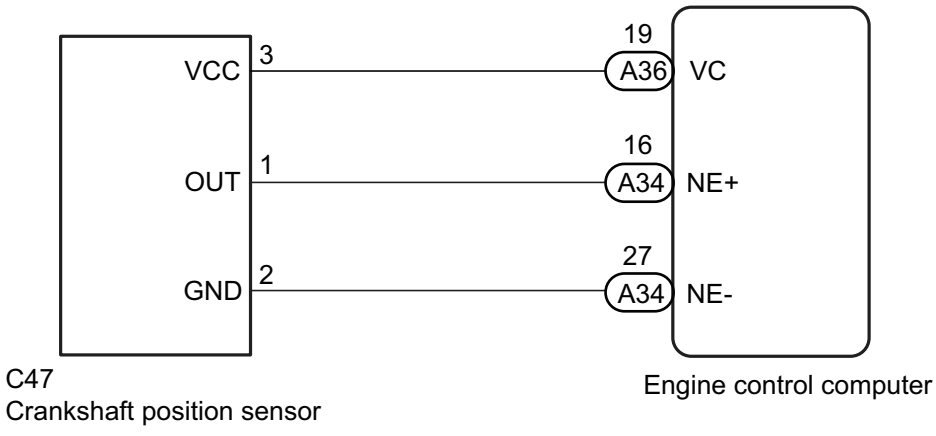

ES

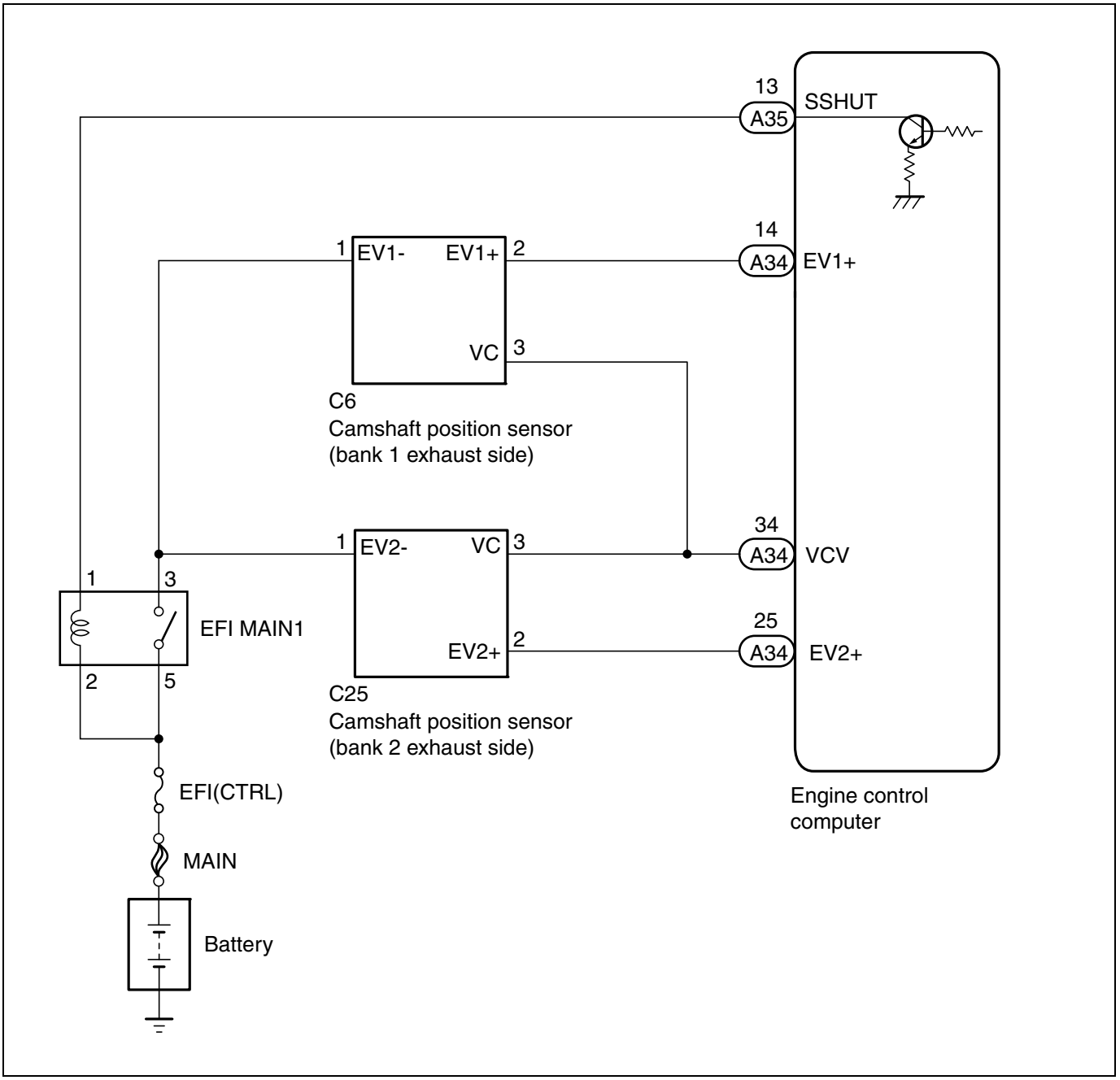
13
A35
SSHUT
14
A34
EV1+
1
EV1-
EV1+
2
VC
3
C6
Camshaft position sensor
(bank 1 exhaust side)
34
A34
VCV
1
EV2-
VC
3
25
A34
EV2+
EV2+
2
C25
Camshaft position sensor
(bank 2 exhaust side)
1
3
2
5
EFI MAIN1
EFI(CTRL)
MAIN
Battery
Engine control
computer

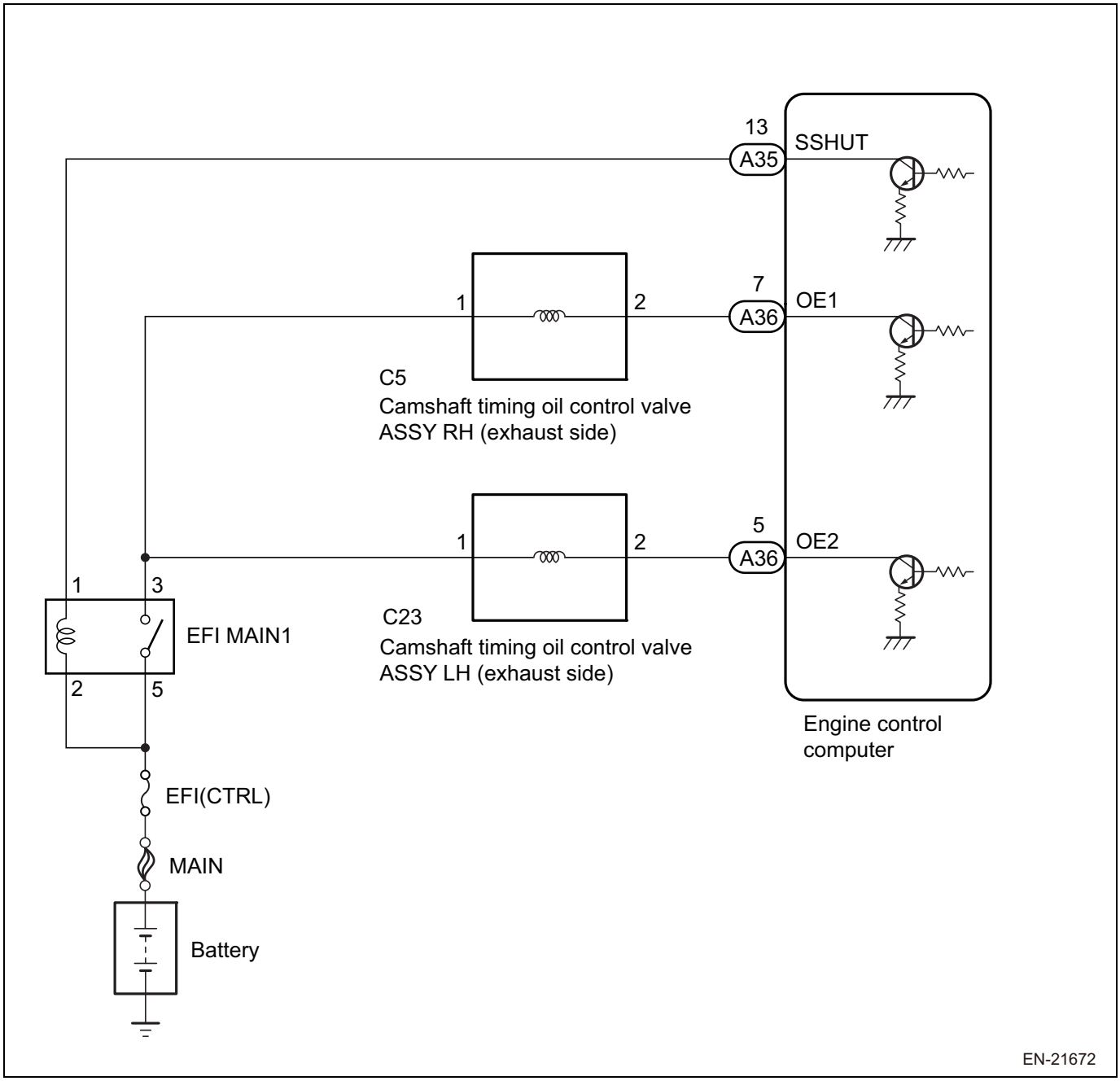

Description of functions

Test drive

Perform test drive to check if the DTC recurs.

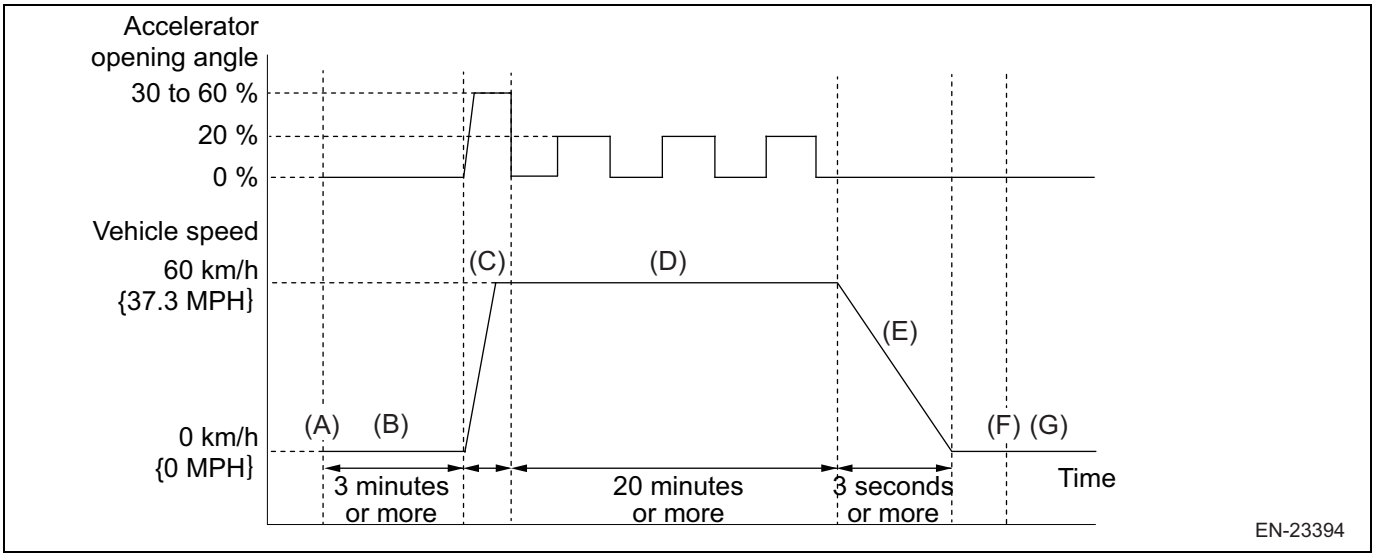

1. Connect the SSM4 to the DLC3.
2. Turn the ignition switch to ON.
3. Turn on the SSM4.
4. Follow the SSM4 on-screen instructions to clear the DTCs. (Refer to ES - 28)
5. Turn the ignition switch to OFF, and wait for 30 seconds.
6. Turn the ignition switch to ON.
7. Turn on the SSM4.
8. Start the engine and let it warm up until the engine coolant temperature stabilizes. (at 75°C {167°F} or more).
9. Perform driving test as follows.

   WARNING:
   - To perform this driving test, two people (a driver and checker) should be on the vehicle, and the data should be checked by a checker.
   - When performing this driving test, always observe the applicable traffic laws such as the speed limit.

   NOTE:

   The vehicle may be driven at accelerated/constant speed according to road conditions.

   (a) Start the engine after warming up the engine (coolant temperature of 75°C (167°F) or more). (A)

   (b) Idle the engine for 3 minutes or more. (B)

   (c) Accelerate to 60 km/h {37.3 MPH}. (C)

   (d) While maintaining 60 km/h {37.3 MPH}, repeat the accelerator pedal opening angle 0 % (5 seconds) ←→20 % (5 seconds) for 20 minutes or more. (D)

   This test requires 2 people. One person operates the reproduction mode while the other one monitors the diagnostic values. Continue monitoring the values as they are not stored.

   (e) Decelerate for 5 seconds or more at the accelerator pedal opening angle 0 %. (E) Leaning is performed during this operation.

   (f) Stop the vehicle, and check the SSM data while the vehicle is idling. (Learning value and ·diagnostic value) (F)

   NOTE:

   When the diagnostic value is 0, the diagnosis is incomplete. Therefore, do not stop the engine, and perform the test driving again.

   (g) If the values in (f) are normal, stop the engine. (G)
10. Turn the ignition switch to ON.
11. Turn on the SSM4.
12. Follow the SSM4 on-screen instructions to check the DTC. (Refer to ES - 28)

Inspection steps

NOTE:

Bank	Malfunction
Bank 1 (exhaust side)	P000B P0014

Bank	Malfunction
Bank 2 (exhaust side)	P000D P0024

- Read the freeze frame data using the SSM4. A part of the engine running conditions under which the engine trouble occurred is recorded in the freeze frame data, which is useful for troubleshooting.
- Bank 1 shows the side where No. 1 cylinder is located.
- Bank 2 shows the side where No. 2 cylinder is located.

1	Reading diagnostic codes

(1) Connect the SSM4 to the DLC3.
(2) Turn the ignition switch to ON.
(3) Turn on the SSM4.
(4) Follow the SSM4 on-screen instructions to check the DTC. (Refer to ES - 28)

Result

Result	Go to
Either P000B, P000D, P0014, or P0024 is output.	A
Either P000B, P000D, P0014, or P0024 and other diagnostic codes are output.	B

NOTE:
- If any diagnostic codes other than P000B, P000D, P0014 or P0024 are output, troubleshoot them first.
- When a diagnostic code is output, store the freeze frame data. (Refer to ES - 28)

B → Progress to the relevant diagnosis code chart (Refer to ES - 12)

A

2	Check of engine oil condition

(1) Check the engine oil condition.
NOTE:
Check the following items.
- Oil quantity within the specified rage
- Occurrence of abnormal contamination
- Solidity due to additive agent
- Use of oil with specified viscosity

NG → Adjustment of oil quantity, or replacement of engine oil and oil filter (Refer to LU - 4) Go to step 3

OK

3	Check of on-board monitor test result

(1) Replace the camshaft timing oil control valve ASSY (exhaust side) on the bank where trouble was detected through the diagnostic code. (Refer to ES - 660)
(2) Connect the SSM4 to the DLC3.
(3) Turn the ignition switch to ON.
(4) Turn on the SSM4.

(5) Follow the SSM4 on-screen instructions to clear the DTCs. (Refer to ES - 28)
(6) Perform test drive. (Refer to "Test drive" under "Description of functions")
WARNING:
When performing this driving test, always observe the applicable traffic laws such as the speed limit.
(7) Using SSM4, read [VVT monitor bank 1] and [VVT monitor bank 2] of mode 06. (Refer to ES - 24)
WARNING:
- To perform this driving test, two people (a driver and checker) should be on the vehicle, and the data should be checked by a checker.
- When performing this driving test, always observe the applicable traffic laws such as the speed limit.

NOTE:
- When the diagnostic value is 0, the diagnosis is incomplete. Therefore, do not stop the engine, and perform the test driving again.
- The diagnostic value is updated repeatedly. Therefore, keep checking the data constantly during the diagnostic value reading is in progress.

(8) Record the values of the read [VVT monitor bank 1] and [VVT monitor bank 2].

Result

Diagnostic codes	Item	Result	Go to
P000B, P0014	Value of [VVT monitor bank 1] of the replaced camshaft timing oil control valve ASSY	Less than 1000	A
		1000 or more	B
P000D, P0024	Value of [VVT monitor bank 2] of the replaced camshaft timing oil control valve ASSY	Less than 1000	A
		1000 or more	B

B → Go to Step 5.

A

4	Check of on-board monitor test result

(1) Compare the values of [VVT monitor bank 1] and [VVT monitor bank 2] recorded in step 3.

Standard value

Diagnostic codes	Item	Result	Go to
P000B, P0014	Value of [VVT monitor bank 1]	1000 or less, and larger than the value of [VVT monitor bank 2] (by the value of [VVT monitor bank 2] ×1.5+100)	A
		1000 or less, and smaller than the value of [VVT monitor bank 2] (by the value of [VVT monitor bank 2] ×1.5+100)	B
P000D, P0024	Value of [VVT monitor bank 2]	1000 or less, and larger by (the value of [VVT monitor bank 1] ×1.5+100) compared to the value of [VVT monitor bank 1]	A
		1000 or less, and smaller by (the value of [VVT monitor bank 1] ×1.5+100) compared to the value of [VVT monitor bank 1]	B

B → Idle of the engine for 5 minutes and replacement of oil filter and the engine oil (flushing) (Refer to LU - 4) Go to step 16

A

5	Check of harness and connector

(1) Check the harness and connector for bend, damage and poor contact.
NOTE:
Check the following items.
- Engine control computer (Refer to ES - 670)
- Camshaft timing oil control valve ASSY (Refer to ES - 660)
- Camshaft position sensor (Refer to ES - 678)
- Crankshaft position sensor (Refer to ES - 681)

NG → Repair or replacement of the faulty parts (Refer to ES - 660, ES - 670, ES - 678, and ES - 681) Go to step 6

OK

6	Check of harness and connector (open circuit)

NOTE:
For the inspection procedure and precautions for wiring harnesses and connectors, refer to IN - 36.
(1) Disconnect the connector for the engine control computer.
(2) Disconnect the camshaft timing oil control valve ASSY (exhaust side) connector.
(3) Measure the resistance between the terminals. (For terminal arrangement, refer to ES - 36.)

Resistance (open circuit check)

Diagnostic codes	Inspection terminals	Inspection conditions	Standard value
P000B, P0014	A36-7 (OE1) - C5-2	Always	Less than 1 Ω
P000D, P0024	A36-5 (OE2) - C23-2	Always	Less than 1 Ω

NG → To repair or replace the faulty parts, go to step 16.

OK

7	Check of harness and connector (open circuit)

NOTE:
For the inspection procedure and precautions for wiring harnesses and connectors, refer to IN - 36.
(1) Disconnect the connector for the engine control computer.
(2) Disconnect the connector for the camshaft position sensor (exhaust side).
(3) Measure the resistance between the terminals. (For terminal arrangement, refer to ES - 36.)

Resistance (open circuit check)

Diagnostic codes	Inspection terminals	Inspection conditions	Standard value
P000B, P0014	A34-14 (EV1+) - C6-2 (EV1+)	Always	Less than 1 Ω
P000D, P0024	A34-25 (EV2+) - C25-2 (EV2+)	Always	Less than 1 Ω

NG → To repair or replace the faulty parts, go to step 16.

OK

ES

8	Check of harness and connector (open circuit)

NOTE:
For the inspection procedure and precautions for wiring harnesses and connectors, refer to IN - 36.

(1) Disconnect the connector for the engine control computer.
(2) Disconnect the crankshaft position sensor connector.
(3) Measure the resistance between the terminals. (For terminal arrangement, refer to ES - 36.)

Resistance (open circuit check)

Inspection terminals	Inspection conditions	Standard value
A34-16(NE+) - C47-1(OUT)	Always	Less than 1 Ω

NG → To repair or replace the faulty parts, go to step 16.

OK

9	Check of engine oil pressure

(1) Check the engine oil pressure. (Refer to LU - 2)

Result

Result	Go to
Malfunction	A
Normal	B

B → Go to Step 12.

A

10	Check of oil strainer

(1) Check the oil strainer in the oil pan. (Refer to EM - 75)
Criteria: There is no clogging or adherence of foreign material.

Result

Result	Go to
Malfunction	A
Normal	B

B → Replace the chain cover. <Note> When assembling the chain cover, excess application of the liquid gasket may cause failure. Always use the type specified in the service manual, and apply proper amount (wire diameter). (Refer to LU - 25) Go to step 13

A

11	Cleaning of oil strainer

(1) Check and clean inside the oil strainer, and remove clogging and adherence of foreign matter.

Next

12	Check of oil passage of chain cover

(1) Remove the engine unit from the vehicle body. (Refer to EM - 75)
(2) Check the oil passage of the chain cover. (Refer to LU - 13)
NOTE:
Check the O-ring and entrance of foreign matter of the following oil passage.
- Inlet opening of oil pump
- Outlet opening of oil pump
- O-ring of each passage to left/right cylinder head
- Oil control valve ASSY
- Entrance of foreign matter

NG → Replace the faulty parts. Replacement of chain cover in the case of foreign matter entrance (Refer to LU - 13) Go to step 13

OK

13	Check of camshaft condition

(1) Remove the timing chain. (Refer to EM - 13)
(2) Turn the camshaft with your hand, and compare the rotational resistance of the four camshafts.
NOTE:
Compare the rotational resistance with that of the bank 2 (bank 1) camshaft, and check the bank 1 (bank 2) camshaft for definitive faults such as unsmoothness and rotational resistance.
- Adherence of foreign matter on camshaft
- Damage of camshaft (scratches, galling, wear, etc.)
- Check of influence due to camshaft journal bearing not rotating properly

NG → Replacement of cam carrier and camshaft (Refer to EM - 75, and EM - 31) Go to step 14

OK

14	Check of oil passage between oil pump and camshaft timing oil control valve ASSY

(1) Visually check the following oil passages between oil pump and camshaft timing oil control valve ASSY, and check for definitive faults such as adherence of foreign matter and clogging.
- Oil passage of cam carrier
- Oil passage on the cylinder head side
- Oil passage at the connection between the cam sprocket and cam shaft
- Oil passage of the cam sprocket back side and at the cam shaft top end with the cam sprocket removed

NOTE:
Refer to the removal procedure of the cam carrier in the service manual. (Refer to EM - 31)

NG → Eliminate the foreign matter. Replacement of oil filer for cam carrier (Do not reuse) (Refer to EM - 75) <Note> •When assembling the chain cover, excess application of the liquid gasket may cause failure. Always use the type specified in the service manual, and apply proper amount (wire diameter). (Refer to LU - 25) •Make sure that the oil filter is pushed so that the surface is flush with the cam carrier surface. (Do not push in excessively.) (Refer to EM - 75) <Reference> Let the engine idle for 5 minutes after finishing the procedure, and replace the oil filter and the engine oil (flushing). (Refer to LU - 4) Go to step 16

OK

15	Replacement of cam sprocket

(1) Replace the cam sprocket. (Refer to EM - 31)
CAUTION:
- When assembling the chain cover, excess application of the liquid gasket may cause failure. Always use the type specified in the service manual, and apply proper amount (wire diameter). (Refer to LU - 25)
- Make sure that the oil filter is pushed so that the surface is flush with the cam carrier surface. (Do not push in excessively.) (Refer to EM - 75)

Next

16	Check of on-board monitor test result

(1) Connect the SSM4 to the DLC3.
(2) Turn the ignition switch to ON.
(3) Turn on the SSM4.
(4) Follow the SSM4 on-screen instructions to clear the DTCs. (Refer to ES - 28)
(5) Turn the ignition switch to OFF, and wait for 30 seconds.
(6) Perform test drive. (Refer to "Test drive" under "Description of functions")

WARNING:
When performing this driving test, always observe the applicable traffic laws such as the speed limit.

(7) Using SSM4, read [VVT monitor bank 1] and [VVT monitor bank 2] of mode 06. (Refer to ES - 24)
WARNING:
- To perform this driving test, two people (a driver and checker) should be on the vehicle, and the data should be checked by a checker.
- When performing this driving test, always observe the applicable traffic laws such as the speed limit.

NOTE:
- When the diagnostic value is 0, the diagnosis is incomplete. Therefore, do not stop the engine, and perform the test driving again.
- The diagnostic value is updated repeatedly. Therefore, keep checking the data constantly during the diagnostic value reading is in progress.

(8) Record the values of the read [VVT monitor bank 1] and [VVT monitor bank 2].

Standard value

Diagnostic codes	Item	Result	Go to
P000B, P0014	Value of [VVT monitor bank 1]	Less than 1000	A
		1000 or more	B
P000D, P0024	Value of [VVT monitor bank 2]	Less than 1000	A
		1000 or more	B

B → Replacement of the engine control computer (Refer to ES - 670)

A

17	Checking diagnostic codes

(1) Compare the values of [VVT monitor bank 1] and [VVT monitor bank 2] recorded in step 16.

Standard value

Diagnostic codes	Item	Result	Go to
P000B, P0014	Value of [VVT monitor bank 1]	1000 or less, and smaller than the value of [VVT monitor bank 2] (by the value of [VVT monitor bank 2] ×1.5+100)	A
		1000 or less, and larger than the value of [VVT monitor bank 2] (by the value of [VVT monitor bank 2] ×1.5+100)	B
P000D, P0024	Value of [VVT monitor bank 2]	1000 or less, and smaller by (the value of [VVT monitor bank 1] ×1.5+100) compared to the value of [VVT monitor bank 1]	A
		1000 or less, and larger by (the value of [VVT monitor bank 1] ×1.5+100) compared to the value of [VVT monitor bank 1]	B

B → Replacement of the engine control computer (Refer to ES - 670)

A

Complete

DTC	P0010	A Camshaft Position Actuator Circuit/Open (Bank 1)

ES

DTC	P0020	A Camshaft Position Actuator Circuit/Open (Bank 2)

Circuit description
For a circuit description, refer to ES - 85.

DTC No.	DTC detection condition	Suspected parts
P0010	Oil control valve electric current on the intake camshaft circuit is less than 0.306 A for 2 seconds or more (bank 1). (1-trip detection logic)	•Open or short condition in camshaft timing oil control valve ASSY on the intake camshaft circuit (bank 1) •Camshaft timing oil control valve ASSY RH (intake side) •ECM
P0020	Oil control valve electric current on the intake camshaft circuit is less than 0.306 A for 2 seconds or more (bank 2). (1-trip detection logic)	•Open or short condition in camshaft timing oil control valve ASSY on the intake camshaft circuit (bank 2) •Camshaft timing oil control valve ASSY LH (intake side) •ECM

MONITOR DESCRIPTION
An open or short condition of the camshaft timing oil control valve ASSY on the intake camshaft circuit is detected through this DTC. If a control current for the camshaft timing oil control valve is abnormally low while the engine is running, the ECM turns on the MIL and stores the DTC.

Monitor strategy

Related DTCs	P0010: Oil control valve for intake - VVT circuit continuity (Bank 1) P0020: Oil control valve for intake - VVT circuit continuity (Bank 2)
Required Sensors/Components (Main)	Camshaft timing oil control valve ASSY
Required Sensors/Components (Related)	-
Frequency of Operation	Continuous
Duration	2 seconds
MIL Operation	Immediately
Sequence of Operation	None

TYPICAL ENABLING CONDITIONS

Overlap prohibited DTC	None
Battery Voltage	10.9V or more
Camshaft timing oil control valve control duty cycle	99.61% or more

TYPICAL MALFUNCTION THRESHOLDS

Actual electric current for controlling the camshaft timing oil control valve	Less than 0.306A

Circuit figure
For a circuit figure, refer to ES - 87.

Description of functions
Test drive
Perform test drive to check if the DTC recurs.

1. Connect the SSM4 to the DLC3.
2. Turn the ignition switch to ON.
3. Turn on the SSM4.
4. Follow the SSM4 on-screen instructions to clear the DTCs. (Refer to ES - 28)
5. Turn the ignition switch to OFF, and wait for 30 seconds.
6. Turn the ignition switch to ON.
7. Turn on the SSM4.
8. Start the engine.
   NOTE:
   If the engine cannot be started, crank the engine for 10 seconds or more.
9. Idle the engine for 20 seconds or more.
10. Follow the SSM4 on-screen instructions to check the DTC. (Refer to ES - 28)

Inspection steps
NOTE:

- Read the freeze frame data using the SSM4. A part of the engine running conditions under which the engine trouble occurred is recorded in the freeze frame data, which is useful for troubleshooting.
- Bank 1 shows the side where No. 1 cylinder is located.
- Bank 2 shows the side where No. 2 cylinder is located.

1	Clear DTC

(1) Connect the SSM4 to the DLC3.
(2) Turn the ignition switch to ON.
(3) Turn on the SSM4.
(4) Follow the SSM4 on-screen instructions to clear the DTCs. (Refer to ES - 28)

Next

2	Read DTC

(1) Connect the SSM4 to the DLC3.
(2) Turn the ignition switch to ON.
(3) Turn on the SSM4.
(4) Follow the SSM4 on-screen instructions to check the DTC. (Refer to ES - 28)

Result

Result	Go to
P0010 or P0020 is output.	A
No DTC is output.	B

B → Inspection for problems that do not normally occur (Refer to ES - 28)

A

3	Camshaft timing oil control valve ASSY unit inspection (intake side)

(1) Perform a unit inspection of camshaft timing oil control valve ASSY. (Refer to ES - 663)

NG → Replacement of camshaft timing oil control valve ASSY (intake side) (Refer to ES - 660)

OK

4	Check wiring harness and connector (camshaft timing oil control valve ASSY (intake side) power supply circuit)

NOTE:
For the inspection procedure and precautions for wiring harnesses and connectors, refer to IN - 36.

(1) Disconnect camshaft timing oil control valve ASSY (intake side) connector.

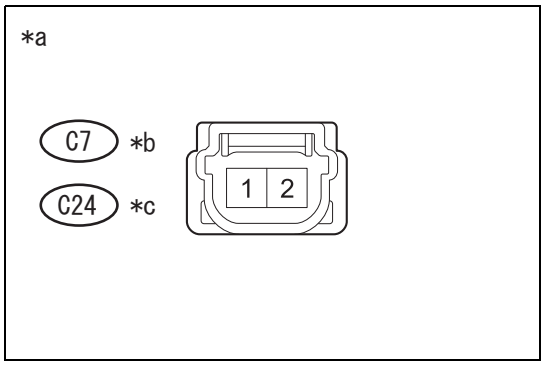

(2) Measure the voltage between the terminals.
Voltage

Inspection terminals	Inspection conditions	Standard value
C7-1 - chassis ground	IG ON	11 to 14 V
C24-1 - chassis ground	IG ON	11 to 14 V

Captions in illustration

*a	Front side of vehicle wiring harness connector (Camshaft timing oil control valve ASSY (intake side) connector)
*b	Bank 1
*c	Bank 2

NG → Go to Step 6.

OK

5	Check wiring harness and connector (engine control computer - camshaft timing oil control valve ASSY (intake side))

NOTE:
For the inspection procedure and precautions for wiring harnesses and connectors, refer to IN - 36.

(1) Disconnect the connector for the engine control computer.
(2) Disconnect camshaft timing oil control valve ASSY (intake side) connector.
(3) Measure the resistance between the terminals. (For terminal arrangement, refer to ES - 36.)

Resistance (open circuit check)

Inspection terminals	Inspection conditions	Standard value
A36-17 (OC1) - C7-2	Always	Less than 1 Ω
A36-16 (OC2) - C24-2	Always	Less than 1 Ω

Resistance (short circuit check)

Inspection terminals	Inspection conditions	Standard value
A36-17 (OC1) and C7-2 - other terminals and chassis ground	Always	10 k Ωor more
A36-16 (OC2) and C24-2 - other terminals and chassis ground	Always	10 k Ωor more

NG → Repair or replacement of wiring harness or connector

OK

Replacement of the engine control computer (Refer to ES - 670)

6	Relay unit inspection (EFI MAIN1 relay)

(1) Perform unit inspection of EFI MAIN1 relay. (Refer to ES - 713)

NG → Relay replacement (EFI MAIN1 relay)

OK

7	Check wiring harness and connector (EFI Main 1 relay - camshaft timing oil control valve ASSY (intake side))

NOTE:
For the inspection procedure and precautions for wiring harnesses and connectors, refer to IN - 36.

(1) Disconnect camshaft timing oil control valve ASSY (intake side) connector.
(2) Remove the EFI MAIN1 relay from the engine compartment relay block.
(3) Measure the resistance between the terminals. (For terminal arrangement, refer to ES - 36.)

Resistance (open circuit check)

Inspection terminals	Inspection conditions	Standard value
3 (EFI MAIN1 relay holder) - C7-1	Always	Less than 1 Ω
3 (EFI MAIN1 relay holder) - C24-1	Always	Less than 1 Ω

Resistance (short circuit check)

Inspection terminals	Inspection conditions	Standard value
3 (EFI MAIN1 relay holder) and C7-1 - other terminals and chassis ground	Always	10 k Ωor more
3 (EFI MAIN1 relay holder) and C24-1 - other terminals and chassis ground	Always	10 k Ωor more

CAUTION:
When using tester probes to take measurements at a holder, do not push them hard against the holder. Otherwise the holder could be damaged.

NG → Repair or replacement of wiring harness or connector

OK

Inspection of the ECM power supply system (Refer to ES - 642)

ES

DTC	P0013	B Camshaft Position - Actuator Circuit/Open (Bank 1)

DTC	P0023	B Camshaft Position - Actuator Circuit/Open (Bank 2)

Circuit description
For a circuit description, refer to ES - 98.

DTC No.	DTC detection condition	Suspected parts
P0013	Oil control valve electric current on the exhaust camshaft circuit is less than 0.306 A for 2 seconds or more (bank 1). (1-trip detection logic)	•Open or short condition in camshaft timing oil control valve ASSY on the exhaust camshaft circuit (bank 1) •Camshaft timing oil control valve ASSY RH (exhaust side) •ECM
P0023	Oil control valve electric current on the exhaust camshaft circuit is less than 0.306 A for 2 seconds or more (bank 2). (1-trip detection logic)	•Open or short condition in camshaft timing oil control valve ASSY on the exhaust camshaft circuit (bank 2) •Camshaft timing oil control valve ASSY LH (exhaust side) •ECM

MONITOR DESCRIPTION
An open or short condition of the camshaft timing oil control valve ASSY on the exhaust camshaft circuit is detected through this DTC. If a control current for the camshaft timing oil control valve is abnormally low while the engine is running, the ECM turns on the MIL and stores the DTC.

Monitor strategy

Related DTCs	P0013: Oil control valve for exhaust - VVT circuit continuity (Bank 1) P0023: Oil control valve for exhaust - VVT circuit continuity (Bank 2)
Required Sensors/Components (Main)	Exhaust side camshaft timing oil control valve ASSY
Required Sensors/Components (Related)	-
Frequency of Operation	Continuous
Duration	2 seconds
MIL Operation	Immediately after
Sequence of Operation	None

TYPICAL ENABLING CONDITIONS

Overlap prohibited DTC	None
Battery Voltage	10.9V or more
Camshaft timing oil control valve control duty cycle	99.61% or more

TYPICAL MALFUNCTION THRESHOLDS

Actual electric current for controlling the camshaft timing oil control valve	Less than 0.306A

Circuit figure
For a circuit figure, refer to ES - 101.

Description of functions
Test drive
Perform test drive to check if the DTC recurs.

1. Connect the SSM4 to the DLC3.
2. Turn the ignition switch to ON.
3. Turn on the SSM4.
4. Follow the SSM4 on-screen instructions to clear the DTCs. (Refer to ES - 28)
5. Turn the ignition switch to OFF, and wait for 30 seconds.
6. Turn the ignition switch to ON.
7. Turn on the SSM4.
8. Start the engine.
   NOTE:
   If the engine cannot be started, crank the engine for 10 seconds or more.
9. Idle the engine for 20 seconds or more.
10. Follow the SSM4 on-screen instructions to check the DTC. (Refer to ES - 28)

Inspection steps
NOTE:

- Read the freeze frame data using the SSM4. A part of the engine running conditions under which the engine trouble occurred is recorded in the freeze frame data, which is useful for troubleshooting.
- Bank 1 shows the side where No. 1 cylinder is located.
- Bank 2 shows the side where No. 2 cylinder is located.

1	Clear DTC

(1) Connect the SSM4 to the DLC3.
(2) Turn the ignition switch to ON.
(3) Turn on the SSM4.
(4) Follow the SSM4 on-screen instructions to clear the DTCs. (Refer to ES - 28)

Next

2	Read DTC

(1) Connect the SSM4 to the DLC3.
(2) Turn the ignition switch to ON.
(3) Turn on the SSM4.
(4) Follow the SSM4 on-screen instructions to check the DTC. (Refer to ES - 28)

Result

Result	Go to
P0013 or P0023 is output.	A
No DTC is output.	B

B → Inspection for problems that do not normally occur (Refer to ES - 28)

A

3	Camshaft timing oil control valve ASSY unit inspection (exhaust side)

(1) Perform a unit inspection of camshaft timing oil control valve ASSY. (Refer to ES - 663)

NG → Replacement of camshaft timing oil control valve ASSY (exhaust side) (Refer to ES - 660)

OK

4	Check wiring harness and connector (camshaft timing oil control valve ASSY (exhaust side) power supply circuit)

NOTE:
For the inspection procedure and precautions for wiring harnesses and connectors, refer to IN - 36.

(1) Disconnect camshaft timing oil control valve ASSY (exhaust side) connector.

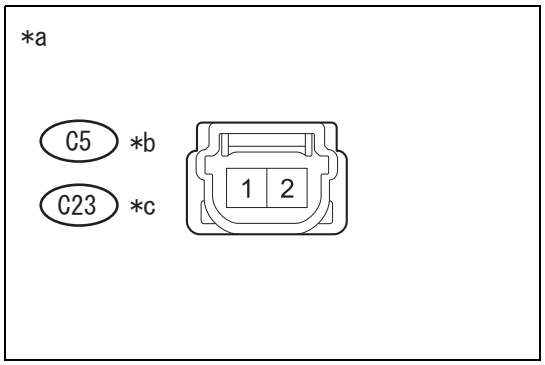

(2) Measure the voltage between the terminals.
Voltage

Inspection terminals	Inspection conditions	Standard value
C5-1 - chassis ground	IG ON	11 to 14 V
C23-1 - chassis ground	IG ON	11 to 14 V

Captions in illustration

*a	Front side of vehicle wiring harness connector (Camshaft timing oil control valve ASSY (exhaust side) connector)
*b	Bank 1
*c	Bank 2

NG → Go to Step 6.

OK

5	Check wiring harness and connector (engine control computer - camshaft timing oil control valve ASSY (exhaust side))

NOTE:
For the inspection procedure and precautions for wiring harnesses and connectors, refer to IN - 36.

(1) Disconnect the connector for the engine control computer.
(2) Disconnect camshaft timing oil control valve ASSY (exhaust side) connector.
(3) Measure the resistance between the terminals. (For terminal arrangement, refer to ES - 36.)

Resistance (open circuit check)

Inspection terminals	Inspection conditions	Standard value
C36-7 (OE1) - C5-2	Always	Less than 1 Ω
C36-5 (OE2) - C23-2	Always	Less than 1 Ω

Resistance (short circuit check)

Inspection terminals	Inspection conditions	Standard value
C36-7 (OE1) and C5-2 - other terminals and chassis ground	Always	10 k Ωor more
C36-5 (OE2) and C23-2 - other terminals and chassis ground	Always	10 k Ωor more

ES

NG → Repair or replacement of wiring harness or connector

OK

Replacement of the engine control computer (Refer to ES - 670)

6	Relay unit inspection (EFI MAIN1 relay)

(1) Perform unit inspection of EFI MAIN1 relay. (Refer to ES - 713)

NG → Relay replacement (EFI MAIN1 relay)

OK

7	Check wiring harness and connector (EFI MAIN1 relay - camshaft timing oil control valve ASSY (exhaust side))

NOTE:
For the inspection procedure and precautions for wiring harnesses and connectors, refer to IN - 36.

(1) Disconnect camshaft timing oil control valve ASSY (exhaust side) connector.
(2) Remove the EFI MAIN1 relay from the engine compartment relay block.
(3) Measure the resistance between the terminals.

Resistance (open circuit check)

Inspection terminals	Inspection conditions	Standard value
3 (EFI MAIN1 relay holder) - C5-1	Always	Less than 1 Ω
3 (EFI MAIN1 relay holder) - C23-1	Always	Less than 1 Ω

Resistance (short circuit check)

Inspection terminals	Inspection conditions	Standard value
3 (EFI MAIN1 relay holder) and C5-1 - other terminals and chassis ground	Always	10 k Ωor more
3 (EFI MAIN1 relay holder) and C23-1 - other terminals and chassis ground	Always	10 k Ωor more

CAUTION:
When using tester probes to take measurements at a holder, do not push them hard against the holder. Otherwise the holder could be damaged.

NG → Repair or replacement of wiring harness or connector

OK

Inspection of the ECM power supply system (Refer to ES - 642)

ES

DTC	P0016	Crankshaft Position - Camshaft Position Correlation (Bank 1 Sensor A)

DTC	P0017	Crankshaft Position - Camshaft Position Correlation (Bank 1 Sensor B)

DTC	P0018	Crankshaft Position - Camshaft Position Correlation (Bank 2 Sensor A)

DTC	P0019	Crankshaft Position - Camshaft Position Correlation (Bank 2 Sensor B)

Circuit description
VVT system consists of engine control computer, camshaft timing oil control valve ASSY, intake cam sprocket, and exhaust cam sprocket. This VVT system controls the intake cam sprocket and the exhaust cam sprocket in order to provide the best valve timing according to a driving condition. This control is based on various conditions including mass air flow, throttle position, and engine coolant temperature. The engine control computer, based on signals from these sensors, adjusts the camshaft timing oil control valve ASSY. As a result, the optimal relative position of the camshaft is obtained, thus providing better fuel efficiency, superior output performance, and better emission performance. Also, the engine control computer detects the actual valve timing through the signal from the camshaft position sensor and performs feedback control to provide the most suitable valve timing.

DTC No.	DTC detection condition	Suspected parts
P0016	When any of the following conditions is met (2 trip detection logic): •Intake side valve timing is off (bank 1). •Intake camshaft position is out of the learning value of basic position (bank 1).	•Valve timing •Camshaft timing oil control valve ASSY RH (intake side) •Oil control valve filter (bank 1) •Intake cam sprocket (bank 1) •ECM
P0017	When any of the following conditions is met (2 trip detection logic): •Exhaust side valve timing is off (bank 1). •Exhaust camshaft position is out of the learning value of basic position (bank 1).	•Valve timing •Camshaft timing oil control valve ASSY RH (exhaust side) •Oil control valve filter (bank 1) •Exhaust cam sprocket (Bank 1) •ECM
P0018	When any of the following conditions is met (2 trip detection logic): •Intake side valve timing is off (bank 2). •Intake camshaft position is out of the learning value of basic position (bank 2).	•Valve timing •Camshaft timing oil control valve ASSY LH (intake side) •Oil control valve filter (bank 2) •Intake cam sprocket (bank 2) •ECM

DTC No.	DTC detection condition	Suspected parts
P0019	When any of the following conditions is met (2 trip detection logic): •Exhaust side valve timing is off (bank 2). •Exhaust camshaft position is out of the learning value of basic position (bank 2).	•Valve timing •Camshaft timing oil control valve ASSY LH (exhaust side) •Oil control valve filter (bank 2) •Exhaust cam sprocket (Bank 2) •ECM

MONITOR DESCRIPTION

In order to monitor the relativity between intake camshaft position and crankshaft position, the ECM checks and compares the VVT neutral position with the VVT learning value during coasting. When the value is out of the specified range for VVT learning value during driving cycle, the ECM illuminates the MIL and records DTC P0016 (bank 1) or P0018 (bank 2).

In order to monitor the relativity between exhaust camshaft position and crankshaft position, the ECM checks and compares the VVT neutral position with the VVT learning value during idling. When the value is out of the specified range for VVT learning value during driving cycle, the ECM illuminates the MIL and records DTC P0017 (bank 1) or P0019 (bank 2).

Monitor strategy

Related DTCs	P0016: Crankshaft / Camshaft correlation (intake) functional check(Bank 1) P0017: Crankshaft / Camshaft correlation (exhaust) functional check(Bank 1) P0018: Crankshaft / Camshaft correlation (intake) functional check(Bank 2) P0019: Crankshaft / Camshaft correlation (exhaust) functional check(Bank 2)
Required Sensors/Components (Main)	Camshaft timing gear ASSY Exhaust cam sprocket
Required Sensors/Components (Related)	Camshaft position sensor Crankshaft position sensor
Frequency of Operation	Continuous
Duration	1 second: P0016, P0018 5 seconds: P0017, P0019
MIL Operation	2 operation cycle
Sequence of Operation	None

TYPICAL ENABLING CONDITIONS

Overlap prohibited DTC	None
Battery Voltage	10.9V or more
AVCS position learning	In operation

TYPICAL MALFUNCTION THRESHOLDS

P0016, P0018 (improper adjustment per 1 tooth)

Actual angle of camshaft - learning value of basic position	Greater than 10°CA

P0016 (improper adjustment per 2 teeth)

Actual angle of camshaft (bank 1)	Greater than 30°CA or less than 89.4°CA

P0018 (improper adjustment per 2 teeth)

Actual angle of camshaft (bank 2)	Greater than 29.4°CA or less than 87.9°CA

P0017, P0019 (improper adjustment per 1 tooth)

Actual angle of camshaft - learning value of basic position	Greater than 10°CA

P0017 (improper adjustment per 2 teeth)

Actual angle of camshaft (bank 1)	Greater than 62.2°CA or less than 120.7°CA

P0019 (improper adjustment per 2 teeth)

Actual angle of camshaft (bank 2)	Greater than 60.4°CA or less than 119.9°CA

Circuit figure

For circuit figure of intake side VVT system, refer to ES - 87.

For circuit figure of exhaust side VVT system, refer to ES - 101.

ES

Description of functions

Test drive 1

Perform test drive 1 to check if the DTC recurs.

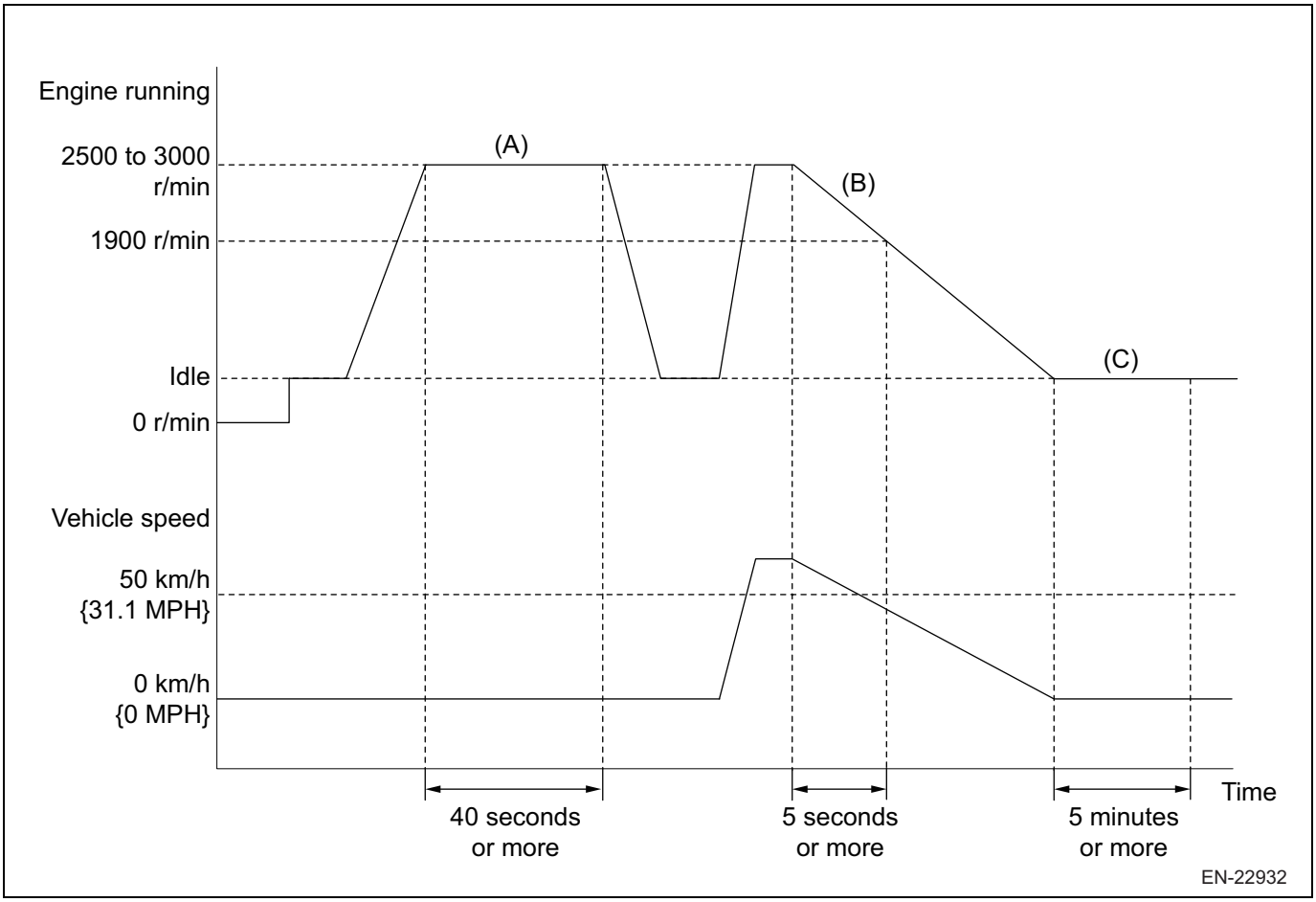

1. Connect the SSM4 to the DLC3.
2. Turn the ignition switch to ON.
3. Turn on the SSM4.
4. Follow the SSM4 on-screen instructions to clear the DTCs. (Refer to ES - 28)
5. Turn the ignition switch to OFF, and wait for 30 seconds.
6. Turn the ignition switch to ON.
7. Turn on the SSM4.
8. Start the engine and let it warm up until the engine coolant temperature stabilizes. (at 75°C {167°F} or more).
9. Keep the engine speed between 2500 and 3000 r/min for 40 seconds or more. (A)
10. At 50km/h {31.1MPH} or more, release the accelerator pedal, brake pedal, and clutch pedal, and decelerate without shifting operation. At this time, select the appropriate gear so that the engine speed range between 2500 and 1900 r/min continues for 5 seconds or more. (B)

    WARNING:

    When performing this driving test, always observe the applicable traffic laws such as the speed limit.

NOTE:

- The vehicle speed is not specified as far as the duration of the engine speed being at between 2500 r/min and 1900 r/min is maintained for 5 seconds or more.
  Ex.) At downhill, the driving test can be performed with a low gear and also at low vehicle speed.
- When the electric load such as A/C is turned OFF, or the vehicle is driven at downhill, the engine speed decreases slowly, and therefore the duration can be obtained easier.

11. Stop the vehicle.
12. Idle the engine for 5 minutes or more. (C)
13. Follow the SSM4 on-screen instructions to check the DTC. (Refer to ES - 28)

Test drive 2

Perform test drive 2 to read the values of [VVT monitor bank 1] and [VVT monitor bank 2].

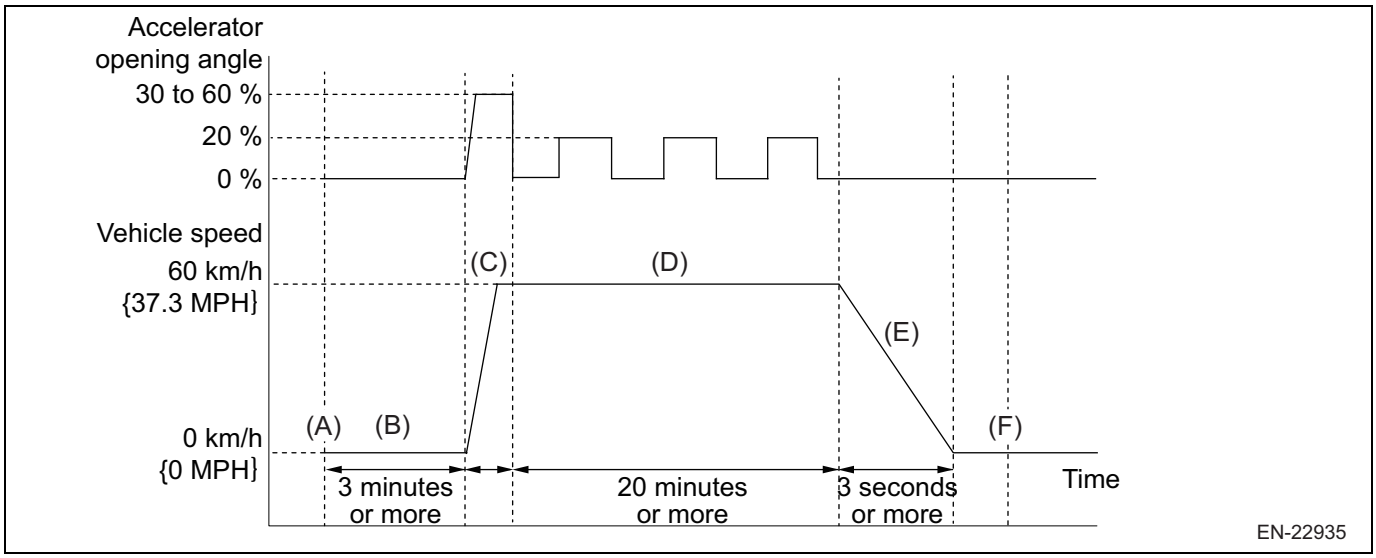

1. Connect the SSM4 to the DLC3.
2. Turn the ignition switch to ON.
3. Turn on the SSM4.
4. Follow the SSM4 on-screen instructions to clear the DTCs. (Refer to ES - 28)
5. Turn the ignition switch to OFF, and wait for 30 seconds.
6. Turn the ignition switch to ON.
7. Turn on the SSM4.
8. Start the engine and let it warm up until the engine coolant temperature stabilizes. (at 75°C {167°F} or more).
9. Perform driving test as follows.

   WARNING:

   When performing this driving test, always observe the applicable traffic laws such as the speed limit.

   NOTE:

   The vehicle may be driven at accelerated/constant speed according to road conditions.

   (a) Start the engine after warming up the engine (coolant temperature of 75°C (167°F) or more). (A)
   (b) Idle the engine for 3 minutes or more. (B)
   (c) Accelerate to 60 km/h {37.3 MPH}. (C)
   (d) While maintaining 60 km/h {37.3 MPH}, repeat the accelerator pedal opening angle 0 % (5 seconds) ←→20 % (5 seconds) for 20 minutes or more. (D)
   (e) Decelerate for 5 seconds or more at the accelerator pedal opening angle 0 %. (E) Leaning is performed during this operation.
   (f) Stop the vehicle and stop the engine. (F)

10. Turn the ignition switch to ON.
11. Turn on the SSM4.
12. Following the SSM4 screen display, read [VVT monitor bank 1] and [VVT monitor bank 2]. (Refer to ES - 24)

Inspection steps

NOTE:

- Read the freeze frame data using the SSM4. A part of the engine running conditions under which the engine trouble occurred is recorded in the freeze frame data, which is useful for troubleshooting.
- Bank 1 shows the side where No. 1 cylinder is located.
- Bank 2 shows the side where No. 2 cylinder is located.

1	Reading diagnostic codes

ES

(1) Connect the SSM4 to the DLC3.
(2) Turn the ignition switch to ON.
(3) Turn on the SSM4.
(4) Follow the SSM4 on-screen instructions to check the DTC. (Refer to ES - 28)

Result

Result	Go to
Either P0016, P0017, P0018, or P0019 is output.	A
Either P0016, P0017, P0018, or P0019 and other diagnostic codes are output.	B

NOTE:

- If any diagnostic codes other than P0016, P0017, P0018, or P0019 are output, troubleshoot them first.
- When a diagnostic code is output, store the freeze frame data. (Refer to ES - 28)

B → Progress to the relevant diagnosis code chart (Refer to ES - 12)

A

2	Check of engine oil condition

(1) Check the engine oil condition.
NOTE:
Check the following items.

- Oil quantity within the specified rage
- Occurrence of abnormal contamination
- Solidity due to additive agent
- Use of oil with specified viscosity

NG → Adjustment of oil quantity, or replacement of engine oil and oil filter (Refer to LU - 4) Go to step 3

OK

3	Check of chain timing

(1) Connect the SSM4 to the DLC3.
(2) Turn the ignition switch to ON.
(3) Turn on the SSM4.
(4) Follow the SSM4 on-screen instructions to clear the DTCs. (Refer to ES - 28)
(5) Turn the ignition switch to OFF.

(6) Disconnect the connector for camshaft timing oil control valve that is relevant to the diagnostic code. (The diagnostic code is output. However, it does not affect the check.)
(7) Select the relevant menu items using the SSM4. : [Each System] / [Engine Control System] / [Data monitor] / [VVT Change Angle #1], [VVT Change Angle #2], [VVT Ex Change Angle #1], [VVT Ex Change Angle #2]
(8) Start the engine, and read the values of [VVT Change Angle #1], [VVT Change Angle #2], [VVT Ex Change Angle #1], [VVT Ex Change Angle #2] within 10 seconds.
NOTE:
When 10 seconds or more have elapsed after engine startup, the position after the startup is considered as the standard value and [0] is displayed.
(9) Record the read value, and stop the engine.

Standard value

Diagnostic codes	Item	Inspection conditions	Result
P0016	[VVT Change Angle #1]	Within 10 seconds after startup	Within ±10 °FR from the standard value (0 °FR)
P0017	[VVT Ex Change Angle #1]		
P0018	[VVT Change Angle #2]		
P0019	[VVT Ex Change Angle #2]		

NG → Repair of chain timing. Go to Step 17.

OK

4	Check of on-board monitor test result

(1) Replace the camshaft timing oil control valve ASSY on the bank where trouble was detected through the diagnostic code. (Refer to ES - 660)
(2) Connect the SSM4 to the DLC3.
(3) Turn the ignition switch to ON.
(4) Turn on the SSM4.
(5) Follow the SSM4 on-screen instructions to clear the DTCs. (Refer to ES - 28)
(6) Perform test drive 2. (Refer to "Test drive 2" under "Description of functions")
WARNING:
When performing this driving test, always observe the applicable traffic laws such as the speed limit.
(7) Using SSM4, read [VVT monitor bank 1] and [VVT monitor bank 2] of mode 06. (Refer to ES - 24)
WARNING:
- To perform this driving test, two people (a driver and checker) should be on the vehicle, and the data should be checked by a checker.
- When performing this driving test, always observe the applicable traffic laws such as the speed limit.

NOTE:
- When the diagnostic value is 0, the diagnosis is incomplete. Therefore, do not stop the engine, and perform the test driving again.
- The diagnostic value is updated repeatedly. Therefore, keep checking the data constantly during the diagnostic value reading is in progress.

(8) Record the values of the read [VVT monitor bank 1] and [VVT monitor bank 2].

Result

Diagnostic codes	Item	Result	Go to
P0016, P0017	Value of [VVT monitor bank 1] of the replaced camshaft timing oil control valve ASSY	Less than 1000	A
		1000 or more	B
P0018, P0019	Value of [VVT monitor bank 2] of the replaced camshaft timing oil control valve ASSY	Less than 1000	A
		1000 or more	B

ES

B → Go to Step 6.

A

5	Check of on-board monitor test result

(1) Compare the values of [VVT monitor bank 1] and [VVT monitor bank 2] recorded in step 4.

Standard value

Diagnostic codes	Item	Result	Go to
P0016, P0017	Value of [VVT monitor bank 1]	1000 or less, and larger than the value of [VVT monitor bank 2] (by the value of [VVT monitor bank 2] ×1.5+100)	A
		1000 or less, and smaller than the value of [VVT monitor bank 2] (by the value of [VVT monitor bank 2] ×1.5+100)	B
P0018, P0019	Value of [VVT monitor bank 2]	1000 or less, and larger by (the value of [VVT monitor bank 1] ×1.5+100) compared to the value of [VVT monitor bank 1]	A
		1000 or less, and smaller by (the value of [VVT monitor bank 1] ×1.5+100) compared to the value of [VVT monitor bank 1]	B

B → Idle of the engine for 5 minutes and replacement of oil filter and the engine oil (flushing) (Refer to LU - 4) Go to step 17

A

6	Check of harness and connector

(1) Check the harness and connector for bend, damage and poor contact.
NOTE:
Check the following items.
- Engine control computer (Refer to ES - 670)
- Camshaft timing oil control valve ASSY (Refer to ES - 660)
- Camshaft position sensor (Refer to ES - 678)
- Crankshaft position sensor (Refer to ES - 681)

NG → Repair or replacement of the faulty parts (Refer to ES - 660, ES - 670, ES - 678, and ES - 681) Go to step 7

OK

7	Check of harness and connector (open circuit)

NOTE:
For the inspection procedure and precautions for wiring harnesses and connectors, refer to IN - 36.
(1) Disconnect the connector for the engine control computer.
(2) Disconnect the connector for the relevant camshaft timing oil control valve ASSY.
(3) Measure the resistance between the terminals. (For terminal arrangement, refer to ES - 36.)

ES

Resistance (open circuit check)

Diagnostic codes	Inspection terminals	Inspection conditions	Standard value
P0016	A36-17 (OC1) - C7-2	Always	Less than 1 Ω
P0017	A36-7 (OE1) - C5-2	Always	Less than 1 Ω
P0018	A36-16 (OC2) - C24-2	Always	Less than 1 Ω
P0019	A36-5 (OE2) - C23-2	Always	Less than 1 Ω

NG → To repair or replace the faulty parts, go to step 17.

OK

8	Check of harness and connector (open circuit)

NOTE:
For the inspection procedure and precautions for wiring harnesses and connectors, refer to IN - 36.
(1) Disconnect the connector for the engine control computer.
(2) Disconnect the connector for the relevant camshaft position sensor.
(3) Measure the resistance between the terminals. (For terminal arrangement, refer to ES - 36.)

Resistance (open circuit check)

Diagnostic codes	Inspection terminals	Inspection conditions	Standard value
P0016	A34-26 (VV1+) - C12-2 (VV1+)	Always	Less than 1 Ω
P0017	A34-14 (EV1+) - C6-2 (EV1+)	Always	Less than 1 Ω
P0018	A34-15 (VV2+) - C26-2 (VV2+)	Always	Less than 1 Ω
P0019	A34-25 (EV2+) - C25-2 (EV2+)	Always	Less than 1 Ω

NG → To repair or replace the faulty parts, go to step 17.

OK

9	Check of harness and connector (open circuit)

NOTE:
For the inspection procedure and precautions for wiring harnesses and connectors, refer to IN - 36.
(1) Disconnect the connector for the engine control computer.
(2) Disconnect the crankshaft position sensor connector.

(3) Measure the resistance between the terminals. (For terminal arrangement, refer to ES - 36.)

Resistance (open circuit check)

Inspection terminals	Inspection conditions	Standard value
A34-16(NE+) - C47-1(OUT)	Always	Less than 1 Ω

NG → To repair or replace the faulty parts, go to step 17.

OK

ES

10	Check of engine oil pressure

(1) Check the engine oil pressure. (Refer to LU - 2)

Result

Result	Go to
Malfunction	A
Normal	B

B → Go to Step 13.

A

11	Check of oil strainer

(1) Check the oil strainer in the oil pan. (Refer to EM - 75)
Criteria: There is no clogging or adherence of foreign material.

Result

Result	Go to
Malfunction	A
Normal	B

B → Replace the chain cover. <Note> When assembling the chain cover, excess application of the liquid gasket may cause failure. Always use the type specified in the service manual, and apply proper amount (wire diameter). (Refer to LU - 25) Go to step 14

A

12	Cleaning of oil strainer

(1) Check and clean inside the oil strainer, and remove clogging and adherence of foreign matter.

Next

13	Check of oil passage of chain cover

(1) Remove the engine unit from the vehicle body. (Refer to EM - 75)
(2) Check the oil passage of the chain cover. (Refer to LU - 13)

NOTE:
Check the O-ring and entrance of foreign matter of the following oil passage.
- Inlet opening of oil pump
- Outlet opening of oil pump
- O-ring of each passage to left/right cylinder head
- Oil control valve ASSY
- Entrance of foreign matter

NG → Replace the faulty parts. Replacement of chain cover in the case of foreign matter entrance (Refer to LU - 13) Go to step 14

ES

OK

14	Check of camshaft condition

(1) Remove the timing chain. (Refer to EM - 13)
(2) Turn the camshaft with your hand, and compare the rotational resistance of the four camshafts.
NOTE:
Compare the rotational resistance with that of the bank 2 (bank 1) camshaft, and check the bank 1 (bank 2) camshaft for definitive faults such as unsmoothness and rotational resistance.
- Adherence of foreign matter on camshaft
- Damage of camshaft (scratches, galling, wear, etc.)
- Check of influence due to camshaft journal bearing not rotating properly

NG → Replacement of cam carrier and camshaft (Refer to EM - 75, and EM - 31) Go to step 15

OK

15	Check of oil passage between oil pump and camshaft timing oil control valve ASSY

(1) Visually check the following oil passages between oil pump and camshaft timing oil control valve ASSY, and check for definitive faults such as adherence of foreign matter and clogging.
- Oil passage of cam carrier
- Oil passage on the cylinder head side
- Oil passage at the connection between the cam sprocket and cam shaft
- Oil passage of the cam sprocket back side and at the cam shaft top end with the cam sprocket removed

NOTE:
Refer to the removal procedure of the cam carrier in the service manual. (Refer to EM - 31)

NG

Eliminate the foreign matter. Replacement of oil filer for cam carrier (Do not reuse) (Refer to EM - 75) <Note> •When assembling the chain cover, excess application of the liquid gasket may cause failure. Always use the type specified in the service manual, and apply proper amount (wire diameter). (Refer to LU - 25) •Make sure that the oil filter is pushed so that the surface is flush with the cam carrier surface. (Do not push in excessively.) (Refer to EM - 75) <Reference> Let the engine idle for 5 minutes after finishing the procedure, and replace the oil filter and the engine oil (flushing). (Refer to LU - 4) Go to step 17

ES

OK

16	Replacement of cam sprocket

(1) Replace the cam sprocket. (Refer to EM - 31)
CAUTION:
- When assembling the chain cover, excess application of the liquid gasket may cause failure. Always use the type specified in the service manual, and apply proper amount (wire diameter). (Refer to LU - 25)
- Make sure that the oil filter is pushed so that the surface is flush with the cam carrier surface. (Do not push in excessively.) (Refer to EM - 75)

Next

17	Check of current data (learning value abnormal)

(1) Connect the SSM4 to the DLC3.
(2) Turn the ignition switch to ON.
(3) Turn on the SSM4.
(4) Follow the SSM4 on-screen instructions to clear the DTCs. (Refer to ES - 28)
(5) Turn the ignition switch to OFF, and wait for 30 seconds.
(6) Turn the ignition switch to ON.
(7) Select the relevant menu items using the SSM4. : [Each System] / [Engine Control System] / [Work Support] / [Active Test] / [Control the VVT] / [Control the VVT Linear (Bank1)], [Control the VVT Linear (Bank2)], [Control the VVT Exhaust Linear (Bank1)], [Control the VVT Exhaust Linear (Bank2)]
(8) Check that the sum of the read values of [Control the VVT Linear (Bank1)], [Control the VVT Linear (Bank2)], [Control the VVT Exhaust Linear (Bank1)] and [Control the VVT Exhaust Linear (Bank2)] and the values of [VVT Change Angle #1], [VVT Change Angle #2], [VVT Ex Change Angle #1] and [VVT Ex Change Angle #2] recorded in step 3 is within the specified range.

Standard value

Diagnostic codes	Item	Result
P0016	Sum of [Control the VVT Linear (Bank1)] and [VVT Change Angle #1]	52 to 72
P0017	Sum of [Control the VVT Exhaust Linear (Bank1)] and [VVT Ex Change Angle #1]	78 to 98
P0018	Sum of [Control the VVT Linear (Bank2)] and [VVT Change Angle #2]	52 to 72

Diagnostic codes	Item	Result
P0019	Sum of [Control the VVT Exhaust Linear (Bank2)] and [VVT Ex Change Angle #2]	78 to 98

NG → Replacement of the engine control computer (Refer to ES - 670) After the replacement, perform test drive. If a diagnostic code is not output, end the diagnosis.

OK

Complete

DTC	P0030	Oxygen Sensor Heater Control Circuit (Bank 1 Sensor 1)

DTC	P0031	Oxygen (A/F) Sensor Heater Control Circuit Low (Bank 1 Sensor 1)

DTC	P0032	Oxygen (A/F) Sensor Heater Control Circuit High (Bank 1 Sensor 1)

Circuit description

The air/fuel ratio sensor generates a voltage *1 that corresponds to the actual air-fuel ratio. This sensor voltage is sent to the engine control computer as feedback so that the engine control computer can control an air-fuel ratio. The engine control computer, based on this signal, determines a deviation from stoichiometric air-fuel ratio level and controls a fuel injection time. The air/fuel ratio sensor is integrated into a heater that warms up solid electrolyte (Zirconia material). This heater is controlled by the engine control computer. When mass air flow rate is low (exhaust gas temperature is low), an electric current flows into the heater to warm up the sensor. This supports more accurate oxygen content detection. The heat generated by the heater is transferred to the solid electrolyte via alumina, which promotes sensor operation. The three-way catalytic converter is used to purify carbon monoxide (CO), hydrocarbon (HC), and nitrogen oxide (NOx) contained in the exhaust gas for a higher purification rate. Due to effective use of the converter, the air fuel ratio is controlled precisely in order to constantly bring the air fuel ratio into the theoretical level.

*1: The value changes inside the engine control computer. Since the air/fuel ratio sensor is a current output element, the electric current is converted into a voltage within the engine control computer. When the voltage is measured at the air/fuel ratio sensor or the engine control computer connector, a constant voltage reading is shown.

ES

Air/fuel ratio sensor

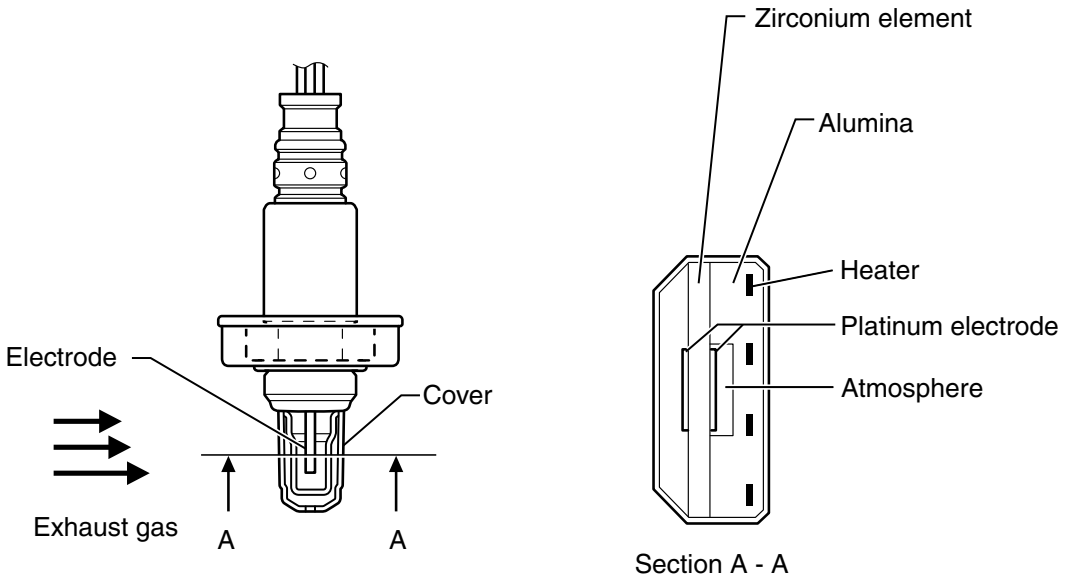

0

NOTE:

- The DTC names are mentioned as O2 sensor (oxygen sensor). Those DTCs, however, relate the air/fuel ratio sensor.
- Sensor 1 is the sensor that is installed forward of the three-way catalytic converter, near the engine.
- When any one of those DTCs is stored, the engine control computer enters fail-safe mode. The engine control computer turns off the air/fuel ratio sensor heater during the fail-safe mode operation. The engine control computer continues fail-safe mode operation until the normal condition is restored.

DTC No.	DTC detection condition	Suspected parts
P0030	Impedance of air/fuel ratio sensor is greater than 65 Ωfor 10 seconds or more. (2 trips detection logic)	•Open/short circuits in the air/fuel ratio sensor •Air / fuel ratio sensor •ECM
P0031	Voltage of air/fuel ratio sensor is less than 1.9 V for 1 second or longer. (1 trips detection logic)	
P0032	Voltage of air/fuel ratio sensor is 1.9 V or more for 2 seconds or longer. (1 trips detection logic)	

MONITOR DESCRIPTION

The ECM adjusts the air/fuel ratio by using air/fuel ratio sensor information to maintain the ratio close to the Stoichiometric air fuel ratio.

Under this condition, the three-way catalytic converter is able to efficiently clean the exhaust gas.

The air/fuel ratio sensor detects oxygen content within the exhaust gas, and this information is sent to the ECM. The inside of the sensor element is in contact with air and the outside is exposed to the exhaust gas. The sensor element is made of platinum plated zirconium, containing integrated heating component.

When the difference between the amount of oxygen in the exhaust gas and the amount of oxygen in air is significant, the zirconium element outputs a small amount of voltage from the platinum plated electrode.

Efficiency of the air/fuel ratio sensor increases significantly when heated. When exhaust gas temperature is low, the sensor cannot generate a useful voltage signal without supplemental heating. In such case, the ECM adjusts supplemental heating based on a duty cycle ratio to adjust an average electric current on the sensor heater element. When the electric current on the heater falls out of the normal range, the signal transmitted from the air/fuel ratio sensor will be inaccurate. If this is the case, the ECM cannot adjust an air/fuel ratio properly.

When the electric current on the air/fuel ratio sensor heater falls out of the normal operation range, the ECM judges this as an abnormal condition and stores DTCs.

Monitor strategy

Related DTCs	P0030: Primary oxygen sensor - Heater functional check P0031: Primary oxygen sensor - Heater circuit continuity P0032: Primary oxygen sensor - Heater circuit continuity
Required Sensors/Components (Main)	Air/fuel ratio sensor heater
Required Sensors/Components (Related)	-
Frequency of Operation	Continuous
Duration	10 seconds: P0030 1 second: P0031 2 seconds: P0032
MIL Operation	2 driving cycles: P0030 Immediately: P0031, P0032
Sequence of Operation	None

TYPICAL ENABLING CONDITIONS

P0030

Overlap prohibited DTC	P0122, P0123, P0222, P0223 (Throttle position sensor) P0300, P0301, P0302, P0303, P0304 (misfire) P0604, P0605 (ECM ROM), P0606 P1160 (throttle return spring) P2101, P2102 (Throttle actuator control motor) P2109 (Throttle position sensor minimum stop) P2119 (Throttle actuator control) P2122, P2123, P2127, P2128 (Accelerator Pedal Position Sensor (APPS) circuit) P2135 (Throttle position sensor (TPS) degree of correlation) P2138 (Accelerator pedal position sensor (APPS) degree of correlation)
Battery Voltage	10.9V or more
Time without fuel shut-off function control	20 seconds or more
Air/fuel ratio sensor heater drive duty cycle	More than 22%
Time elapsed after the items described above	30 seconds or more

P0031

Overlap prohibited DTC	None
Battery Voltage	10.9V or more
Air/fuel ratio sensor heater drive duty cycle	Less than 87.5%

P0032

Overlap prohibited DTC	None
Battery Voltage	10.9V or more
Air/fuel ratio sensor heater drive duty cycle	More than 12.5 %

TYPICAL MALFUNCTION THRESHOLDS

P0030

Air/fuel ratio sensor resistance	More than 58 Ω

P0031

Air/fuel ratio sensor ON voltage	Less than 1.9V

P0032

Air/fuel ratio sensor ON voltage	1.9V or more

Circuit figure

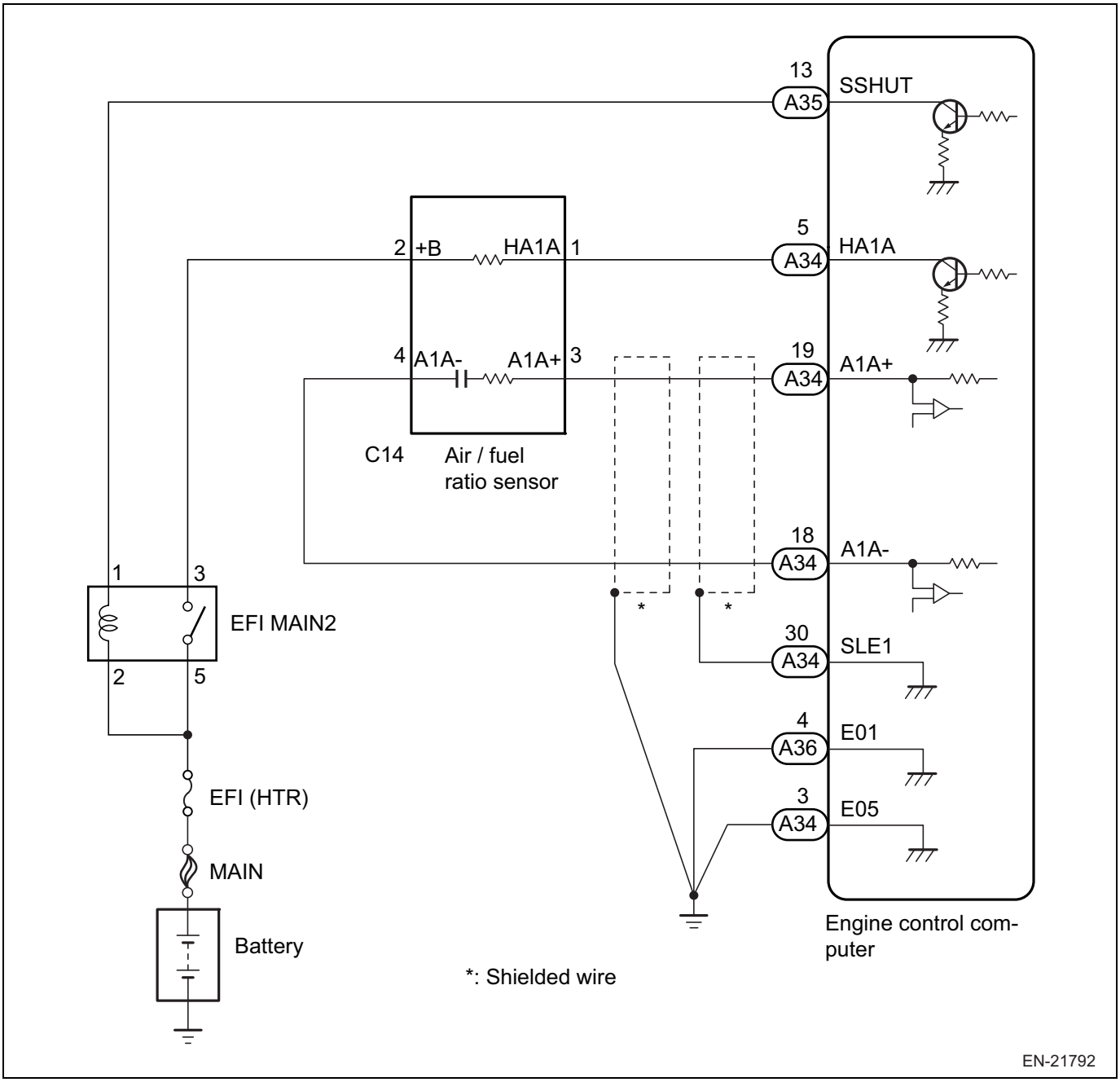

Description of functions

Test drive (P0030)

Perform test drive to check if the DTC recurs.

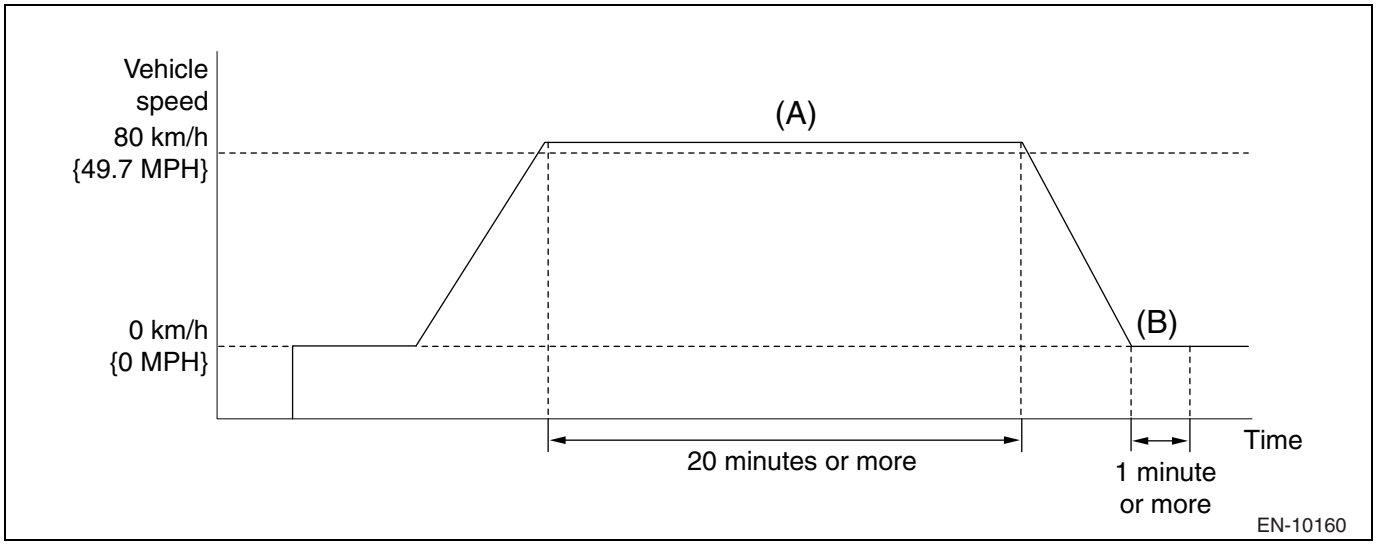

1. Connect the SSM4 to the DLC3.
2. Turn the ignition switch to ON.
3. Turn on the SSM4.
4. Follow the SSM4 on-screen instructions to clear the DTCs. (Refer to ES - 28)
5. Turn the ignition switch to OFF, and wait for 30 seconds.
6. Turn the ignition switch to ON.
7. Turn on the SSM4.
8. Start the engine and let it warm up until the engine coolant temperature stabilizes. (at 75°C {167°F} or more).
9. Perform driving test as follows.
   WARNING:
   When performing this driving test, always observe the applicable traffic laws such as the speed limit.
   (a) Drive at 80 km/h {49.7 MPH} or more for 20 minutes or more. (A)
   (b) Stop the vehicle.
   (c) Idle the engine for 1 minute or more. (B)
10. Follow the SSM4 on-screen instructions to check the DTC. (Refer to ES - 28)

Test drive (P0031, P0032)

Perform test drive to check if the DTC recurs.

1. Connect the SSM4 to the DLC3.
2. Turn the ignition switch to ON.
3. Turn on the SSM4.
4. Follow the SSM4 on-screen instructions to clear the DTCs. (Refer to ES - 28)
5. Turn the ignition switch to OFF, and wait for 30 seconds.
6. Turn the ignition switch to ON.
7. Turn on the SSM4.
8. Start the engine.
   NOTE:
   If the engine cannot be started, crank the engine for 10 seconds or more.
9. Idle the engine for 20 seconds or more.
10. Follow the SSM4 on-screen instructions to check the DTCs. (Refer to ES - 28)

Inspection steps

CAUTION:

Before performing troubleshooting, check the fuse for this circuit.

NOTE:

- Read the freeze frame data using the SSM4. A part of the engine running conditions under which the engine trouble occurred is recorded in the freeze frame data, which is useful for troubleshooting.
- From [Cylinder Fuel Rate] under [Active Test], read the output voltage of the air/fuel ratio sensor when the fuel injection amount is increased or decreased. If the air/fuel ratio sensor output voltage shows little response, the sensor may be at fault. (Refer to ES - 220)

1	Air/fuel ratio sensor unit inspection

(1) Perform a unit inspection on the air/fuel ratio sensor. (Refer to ES - 708)

NG → Replacement of air/fuel ratio sensor (Refer to ES - 707)

OK

ES

2	Check wiring harness and connector (air/fuel ratio sensor heater power supply circuit)

NOTE:
For the inspection procedure and precautions for wiring harnesses and connectors, refer to IN - 36.

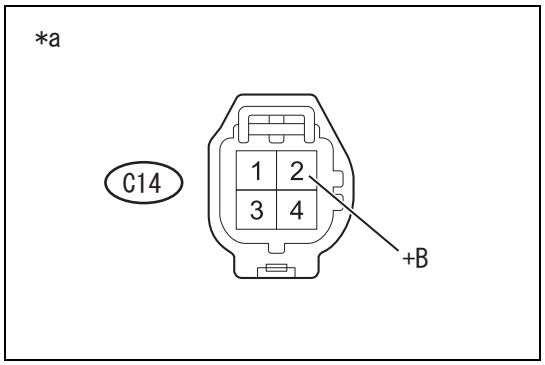

(1) Disconnect the air/fuel ratio sensor connector.
(2) Measure the voltage between the terminals.

Voltage

Inspection terminals	Inspection conditions	Standard value
C14-2 (+B) - chassis ground	IG ON	11 to 14 V

Captions in illustration

*a	Front side of vehicle wiring harness connector (air/fuel ratio sensor connector)

NG → Go to Step 6.

OK

3	Check wiring harness and connector (air/fuel ratio sensor - engine control computer)

NOTE:
For the inspection procedure and precautions for wiring harnesses and connectors, refer to IN - 36.

(1) Disconnect the connector for the engine control computer.
(2) Disconnect the air/fuel ratio sensor connector.
(3) Measure the resistance between the terminals. (For terminal arrangement, refer to ES - 36.)

Resistance (open circuit check)

Inspection terminals	Inspection conditions	Standard value
A34-5 (HA1A) - C14-1 (HA1A)	Always	Less than 1 Ω

Resistance (short circuit check)

Inspection terminals	Inspection conditions	Standard value
A34-5 (HA1A) and C14-1 (HA1A) - other terminals and chassis ground	Always	10 k Ωor more

NG → Repair or replacement of wiring harness or connector

OK

4	Clear DTC

(1) Connect the SSM4 to the DLC3.
(2) Turn the ignition switch to ON.
(3) Turn on the SSM4.
(4) Follow the SSM4 on-screen instructions to clear the DTCs. (Refer to ES - 28)
(5) Turn the ignition switch to OFF, and wait for 30 seconds.

ES

Next

5	Perform test drive for operation check

(1) Perform test drive. (Refer to "Test drive" under "Description of functions")
WARNING:
When performing this driving test, always observe the applicable traffic laws such as the speed limit.
(2) Follow the SSM4 on-screen instructions to check the DTC. (Refer to ES - 28)

Result

Result	Go to
No DTC is output	A
P0030, P0031, or P0032 is output.	B

B → Replacement of the engine control computer (Refer to ES - 670)

A

Inspection for problems that do not normally occur (Refer to ES - 28)

6	Relay unit inspection (EFI MAIN2 relay)

(1) Perform inspection of EFI MAIN2 relay unit. (Refer to ES - 713)

NG → Relay replacement (EFI MAIN2 relay)

OK

7	Check wiring harness and connector (EFI MAIN2 relay - air/fuel ratio sensor)

NOTE:
For the inspection procedure and precautions for wiring harnesses and connectors, refer to IN - 36.
(1) Disconnect the air/fuel ratio sensor connector.
(2) Remove EFI MAIN2 relay from the engine compartment relay block.
(3) Measure the resistance between the terminals.

Resistance (open circuit check)

Inspection terminals	Inspection conditions	Standard value
3 (EFI MAIN2 relay holder) - C14-2 (+B)	Always	Less than 1 Ω

Resistance (short circuit check)

Inspection terminals	Inspection conditions	Standard value
3 (EFI MAIN2 relay holder) and C14-2 (+B) - other terminals and chassis ground	Always	10 k Ωor more

ES

CAUTION:
When using tester probes to take measurements at a relay holder, do not push them hard against the holder. Otherwise the holder could be damaged.

NG → Repair or replacement of wiring harness or connector

OK

Inspection of the ECM power supply system (Refer to ES - 642)

DTC	P0037	Oxygen Sensor Heater Control Circuit Low (Bank 1 Sensor 2)

DTC	P0038	Oxygen Sensor Heater Control Circuit High (Bank 1 Sensor 2)

DTC	P0141	Oxygen Sensor Heater Circuit (Bank 1 Sensor 2)

Circuit description
The three-way catalytic converter is used to efficiently purify carbon monoxide (CO), hydrocarbon (HC), and nitrogen oxide (NOx) contained in the exhaust gas. The maximum performance of this three-way catalyst is reached when it functions at near stoichiometric air-fuel ratio. Therefore, unless the engine is precisely controlled to produce near this air fuel ratio, CO, HC, and NOx are not efficiently purified. Oxygen sensors are provided for the purpose of this control. When an oxygen sensor detects an oxygen level within the exhaust gas produced from proper combustion near the stoichiometric air-fuel ratio, its output voltage changes quickly. This characteristic is used to send a signal to the engine control computer for an accurate air/fuel control.
Under a leaner air/fuel ratio, oxygen level within the exhaust gas increases. The oxygen sensor sends this information (lean air/fuel ratio state) to the engine control computer. (works with a small electric power: less than 0.45 V)
Under a richer air/fuel ratio, oxygen level within the exhaust gas decreases. The oxygen sensor sends this information (rich air/fuel ratio state) to the engine control computer. (Works with a large electric power: more than 0.45 V)
A zirconium element is used for the sensor element. The zirconium element is made of platinum plated zirconium, containing integrated heating component. The inside surface of the zirconium element is exposed to the atmospheric air, and the outside surface is exposed to the exhaust gas. When there is a significant difference in oxygen level between the atmospheric air and the exhaust gas, the sensor outputs a small amount of voltage. Efficiency of the oxygen sensor increases significantly when heated. When exhaust gas temperature is low, the oxygen sensor cannot generate a useful voltage signal without supplemental heating. This is the reason why the oxygen sensor is equipped with a heater that heats up its zirconium element. The engine control computer uses the duty cycle approach to control the supplemental heating, adjusting the average electric current supplied to the zirconium element.

Oxygen sensor:

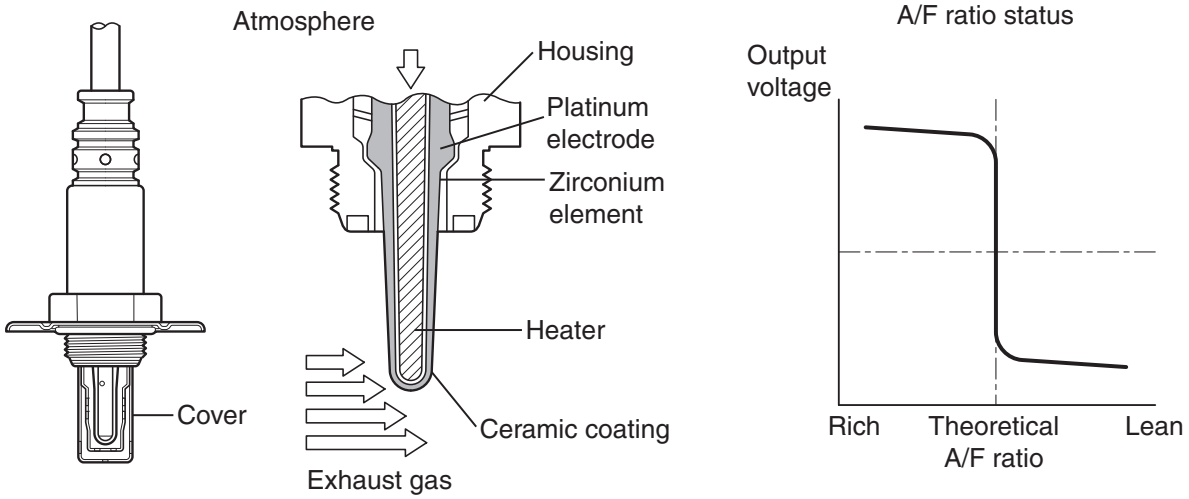

NOTE:
The engine control computer has pulse-width modulation control circuits to adjust a electric current via the heater. The oxygen sensor heater circuit uses the +B side relay of this circuit.

DTC No.	DTC detection condition	Suspected parts
P0037	Oxygen sensor heater voltage is battery voltage ×0.34V or less. (2 trips detection logic)	•Open or short circuit in oxygen sensor heater circuit •Oxygen sensor •ECM
P0038	Oxygen sensor heater current is 12 A or more. (2 trips detection logic)	
P0141	Oxygen sensor heater voltage is less than battery voltage ×0.88 V for 10 seconds. 17 (2 trips detection logic)	

MONITOR DESCRIPTION
A zirconium element is used for the sensor element. The sensor detects an oxygen level within the exhaust gas. When temperature of the zirconium element is normal and the oxygen temperature between the inside and outside of the sensor is large, the zirconium element generates a voltage signal. The sensor is integrated with a heater to help the zirconium element improve performance to detect the oxygen level. This supplemental heating is controlled by the ECM.
The ECM monitors the electric current which is sent to oxygen sensor heaters to check the heaters for malfunction.
When the electric current on the heaters falls out of the normal range, the signal transmitted from oxygen sensors will be inaccurate. When the electric current on the oxygen sensor heater falls out of the normal operation range, the ECM judges this as an abnormal condition and stores DTCs.

Monitor strategy

Related DTCs	P0037: Secondary oxygen sensor - Heater circuit continuity P0038: Secondary oxygen sensor - Heater circuit continuity P0141: Secondary oxygen sensor - Heater functional check
Required Sensors/Components (Main)	Oxygen sensor heater
Required Sensors/Components (Related)	-
Frequency of Operation	Continuous

Duration	10 seconds (8 msec. ×1250 times) : P0037 2.56 seconds (8 msec.×320 times) : P0038 10 seconds: P0141
MIL Operation	2 operation cycle
Sequence of Operation	None

TYPICAL ENABLING CONDITIONS

P0037

Overlap prohibited DTC	None
Battery Voltage	10.9V or more
Oxygen sensor heater drive duty cycle	Less than 75%

P0038

Overlap prohibited DTC	None
Battery Voltage	10.9V or more
Oxygen sensor heater drive duty cycle	20% or more

P0141

Overlap prohibited DTC	P0037, P0038, P0137, P0138
Battery Voltage	10.9V or more
Time elapsed after the start of oxygen heater control	60 seconds or more
Time without fuel shut-off function control	20 seconds or more

TYPICAL MALFUNCTION THRESHOLDS

P0037

Output voltage	Battery voltage ×0.34V or less

P0038

Measured secondary oxygen sensor heater control current	12A or more

P0141

Oxygen sensor resistance	More than 80 Ω

Monitoring result

Refer to [Monitor Status Check] (Refer to ES - 24)

Circuit figure

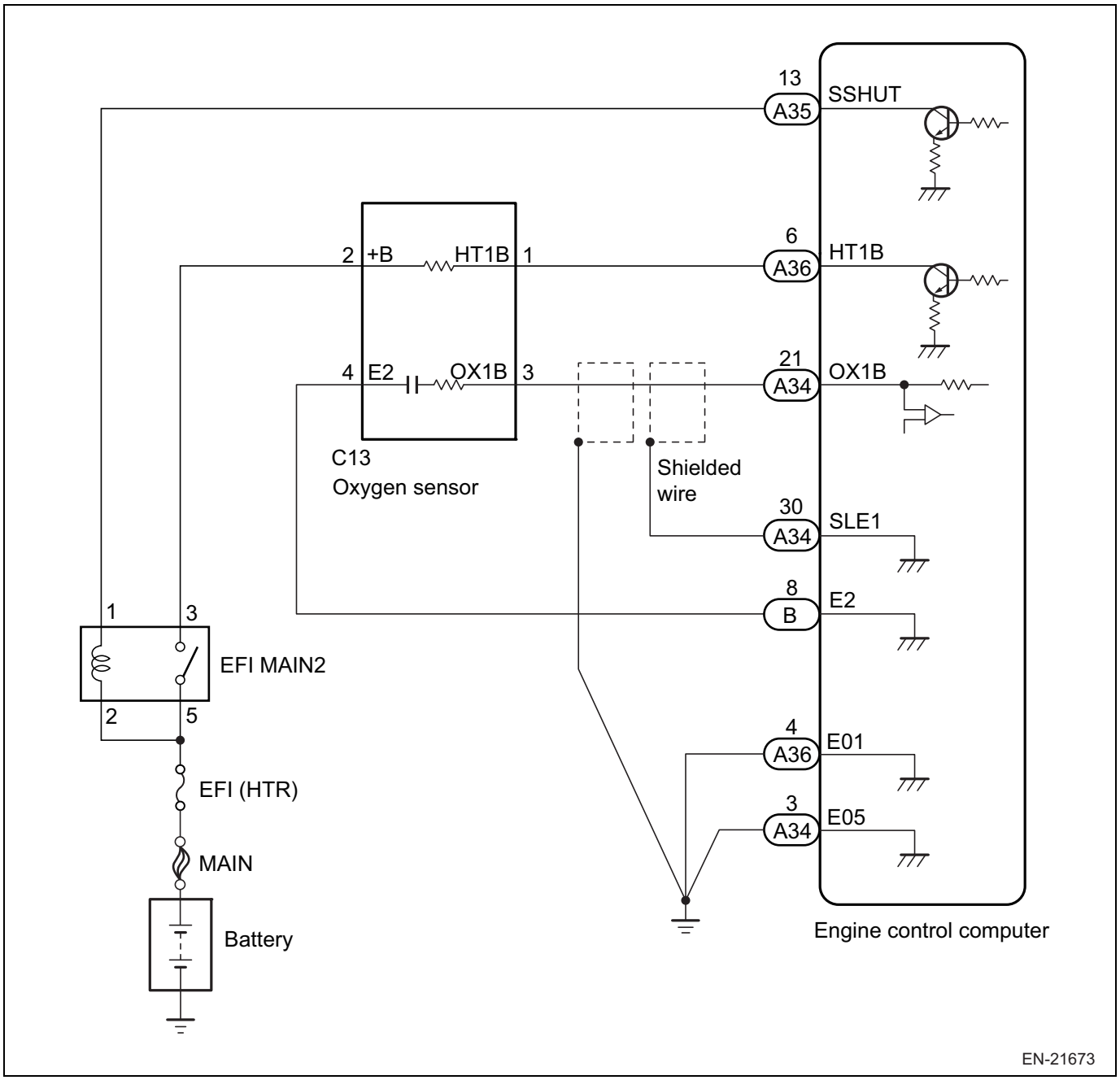

Description of functions

Test drive (P0037, P0038)

Perform test drive to check if the DTC recurs.

1. Connect the SSM4 to the DLC3.
2. Turn the ignition switch to ON.
3. Turn on the SSM4.
4. Follow the SSM4 on-screen instructions to clear the DTCs. (Refer to ES - 28)
5. Turn the ignition switch to OFF, and wait for 30 seconds.
6. Turn the ignition switch to ON.
7. Turn on the SSM4.
8. Start the engine.
   NOTE:
   If the engine cannot be started, crank the engine for 10 seconds or more.
9. Idle the engine for 20 seconds or more.

10. Follow the SSM4 on-screen instructions to check the DTCs. (Refer to ES - 28)

Test drive (P0141)

Perform test drive to check if the DTC recurs.

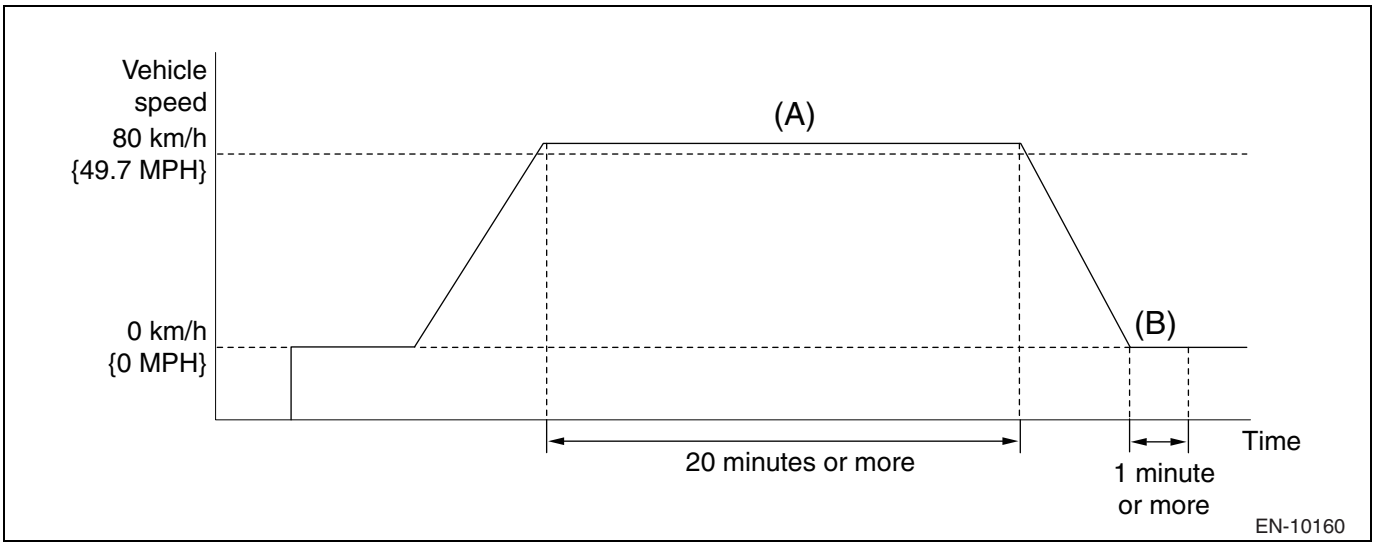

1. Connect the SSM4 to the DLC3.
2. Turn the ignition switch to ON.
3. Turn on the SSM4.
4. Follow the SSM4 on-screen instructions to clear the DTCs. (Refer to ES - 28)
5. Turn the ignition switch to OFF, and wait for 30 seconds.
6. Turn the ignition switch to ON.
7. Turn on the SSM4.
8. Start the engine and let it warm up until the engine coolant temperature stabilizes. (at 75°C {167°F} or more).
9. Perform driving test as follows.
   WARNING:
   When performing this driving test, always observe the applicable traffic laws such as the speed limit.
   (a) Drive at 80 km/h {49.7 MPH} or more for 20 minutes or more. (A)
   (b) Stop the vehicle.
   (c) Idle the engine for 1 minute or more. (B)
10. Follow the SSM4 on-screen instructions to check the DTC. (Refer to ES - 28)

Inspection steps

CAUTION:

Before performing troubleshooting, check the fuse for this circuit.

NOTE:

- Read the freeze frame data using the SSM4. A part of the engine running conditions under which the engine trouble occurred is recorded in the freeze frame data, which is useful for troubleshooting.
- From [Cylinder Fuel Rate] under [Active Test], read the output voltage of the oxygen sensor when the fuel injection amount is increased or decreased. If the oxygen sensor output voltage shows little response, the sensor may be at fault. (Refer to ES - 220)

1	Oxygen sensor unit inspection

(1) Perform oxygen sensor unit inspection. (Refer to ES - 712)

NG → Replacement of oxygen sensor (Refer to ES - 710)

OK

2	Check wiring harness and connector (oxygen sensor heater power supply circuit)

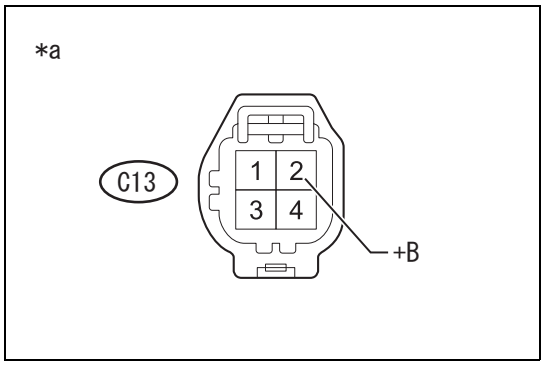

NOTE:
For the inspection procedure and precautions for wiring harnesses and connectors, refer to IN - 36.
(1) Disconnect the oxygen sensor connector.
(2) Measure the voltage between the terminals.
Voltage

Inspection terminals	Inspection conditions	Standard value
C13-2 (+B) - chassis ground	IG ON	11 to 14 V

Captions in illustration

*a	Front side of vehicle wiring harness connector (oxygen sensor connector)

NG → Go to Step 6.

OK

3	Check wiring harness and connector (oxygen sensor - engine control computer)

NOTE:
For the inspection procedure and precautions for wiring harnesses and connectors, refer to IN - 36.
(1) Disconnect the oxygen sensor connector.
(2) Disconnect the connector for the engine control computer.
(3) Measure the resistance between the terminals. (For terminal arrangement, refer to ES - 36.)

Resistance (open circuit check)

Inspection terminals	Inspection conditions	Standard value
A36-6 (HT1B) - C13-1 (HT1B)	Always	Less than 1 Ω

Resistance (short circuit check)

Inspection terminals	Inspection conditions	Standard value
A36-6 (HT1B) or C13-1 (HT1B) - other terminals and chassis ground	Always	10 k Ωor more

NG → Repair or replacement of wiring harness or connector

OK

4	Clear DTC

(1) Connect the SSM4 to the DLC3.
(2) Turn the ignition switch to ON.
(3) Turn on the SSM4.
(4) Follow the SSM4 on-screen instructions to clear the DTCs. (Refer to ES - 28)
(5) Turn the ignition switch to OFF, and wait for 30 seconds.

Next

5	Perform test drive for operation check

(1) Perform test drive. (Refer to "Test drive" under "Description of functions")
WARNING:
When performing this driving test, always observe the applicable traffic laws such as the speed limit.
(2) Follow the SSM4 on-screen instructions to check the DTC. (Refer to ES - 28)

ES

Result

Result	Go to
No DTC is output	A
P0037, P0038, or P0141 is output.	B

B → Replacement of the engine control computer (Refer to ES - 670)

A

Inspection for problems that do not normally occur (Refer to ES - 28)

6	Relay unit inspection (EFI MAIN2 relay)

(1) Perform inspection of EFI MAIN2 relay unit. (Refer to ES - 713)

NG → Relay replacement (EFI MAIN2 relay)

OK

7	Check wiring harness and connector (EFI MAIN2 relay - oxygen sensor)

NOTE:
For the inspection procedure and precautions for wiring harnesses and connectors, refer to IN - 36.
(1) Disconnect the oxygen sensor connector.
(2) Remove EFI MAIN2 relay from the engine compartment relay block.
(3) Measure the resistance between the terminals.

Resistance (open circuit check)

Inspection terminals	Inspection conditions	Standard value
3 (EFI MAIN2 relay holder) - C13-2 (+B)	Always	Less than 1 Ω

Resistance (short circuit check)

Inspection terminals	Inspection conditions	Standard value
3 (EFI MAIN2 relay holder) or C13-2 (+B) - other terminals and chassis ground	Always	10 k Ωor more

CAUTION:
When using tester probes to take measurements at a relay holder, do not push them hard against the holder. Otherwise the holder could be damaged.

NG → Repair or replacement of wiring harness or connector

OK

Inspection of the ECM power supply system (Refer to ES - 642)

DTC	P0068	Manifold Pressure Sensor Range/Performance

Circuit description
For a circuit description, refer to ES - 173.

ES

DTC No.	DTC detection condition	Suspected parts
P0068	When any of the following conditions is met (2 trip detection logic): •When the throttle position is at 10° or more, vacuum sensor voltage is less than 1.25 V for 5 seconds or longer. •When the throttle position is at 3.8° or less, vacuum sensor voltage is 3.3 V or more for 10 seconds or longer.	•Open or short condition in vacuum sensor circuit •Vacuum sensor •ECM

MONITOR DESCRIPTION
The vacuum sensor is installed on the intake manifold.
If the intake manifold pressure is small under a driving condition when expected to be large, or if the intake manifold pressure is large under a driving condition when expected to be small, this DTC is stored.

Monitor strategy

Related DTCs	P0068: Manifold absolute pressure sensor rationality check
Required Sensors/Components (Main)	Vacuum sensor
Required Sensors/Components (Related)	Crankshaft position sensor
Frequency of Operation	Continuous
Duration	5 seconds: Low pressure side monitor 5 seconds: High pressure side monitor
MIL Operation	2 operation cycle
Sequence of Operation	None

TYPICAL ENABLING CONDITIONS
All

Overlap prohibited DTC	P0107, P0108 (vacuum (MAP) sensor) P0111, P0112, P0113 (Intake Air Temperature (IAT) sensor) P0117, P0118 (engine coolant temperature (ECT) sensor) P0122, P0123, P0222, P0223 (Throttle position sensor) P0604, P0605 (ECM ROM), P0606 P1160 (throttle return spring) P2101, P2102 (Throttle actuator control motor) P2109 (Throttle position sensor minimum stop) P2119 (Throttle actuator control) P2122, P2123, P2127, P2128 (Accelerator Pedal Position Sensor (APPS) circuit) P2135 (Throttle position sensor (TPS) degree of correlation) P2138 (Accelerator pedal position sensor (APPS) degree of correlation)

Low pressure side monitor

Engine Speed	Less than 3600 r/min
Mass air flow (with atmospheric pressure correction)	Greater than 0.72g/rev
Throttle opening angle	11.2% or more

High pressure side monitor

Engine Speed	550 to 850 r/min
Mass air flow (with atmospheric pressure correction)	Less than 0.3g/rev
Throttle opening angle	4% or less

ES

TYPICAL MALFUNCTION THRESHOLDS

Low pressure side monitor

Vacuum sensor voltage [intake manifold absolute pressure]	Less than 2.34 kPa (17.6 mmHg, 0.7 inHg, 0.3 psi)

High pressure side monitor

Vacuum sensor voltage [intake manifold absolute pressure]	2.34 kPa (17.6 mmHg, 0.7 inHg, 0.3 psi) or more

Circuit figure

For a circuit figure, refer to ES - 174.

Description of functions

Test drive

Perform test drive to check if the DTC recurs.

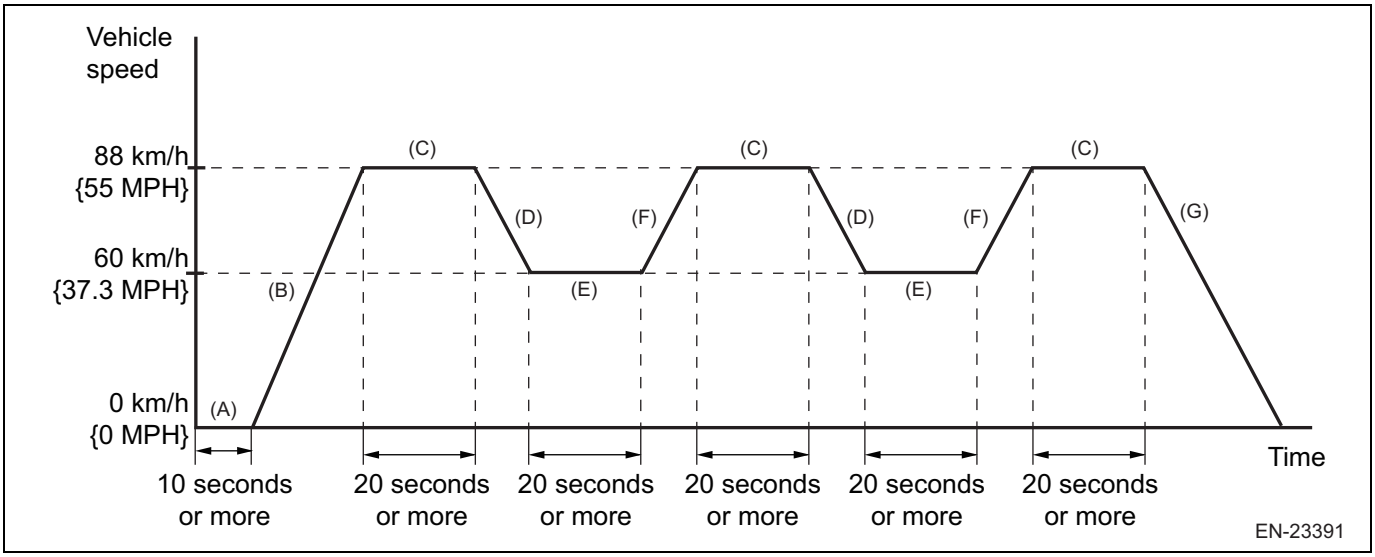

1. Connect the SSM4 to the DLC3.
2. Turn the ignition switch to ON.
3. Turn on the SSM4.
4. Follow the SSM4 on-screen instructions to clear the DTCs. (Refer to ES - 28)
5. Turn the ignition switch to OFF, and wait for 30 seconds.
6. Turn the ignition switch to ON.
7. Turn on the SSM4.
8. Start the engine and let it warm up until the engine coolant temperature stabilizes. (at 75°C {167°F} or more).
9. Perform driving test as follows.

   WARNING:

   When performing this driving test, always observe the applicable traffic laws such as the speed limit.

   (a) Move the select lever to "P" range or move the shift lever to the neutral position, and let the engine idle for 10 seconds or more. (A)

   (b) Depress the accelerator pedal half way, and accelerate to 88 km/h {55 MPH} or more. (B)

   (c) Drive at 88 km/h {55 MPH} or more for 20 seconds or more. (C)

(d) Release the accelerator pedal, and decelerate to 60 km/h {37.3 MPH}. (D)
(e) Drive at 60 km/h {37.3 MPH} or less for 20 seconds or more. (E)
(f) Depress the accelerator pedal half way, and accelerate to 88 km/h {55 MPH} or more. (F)
(g) Release the accelerator pedal, and stop the vehicle. (G)
10. Follow the SSM4 on-screen instructions to check the DTC. (Refer to ES - 28)

Inspection steps
CAUTION:
Before performing troubleshooting, check the fuse for this circuit.
NOTE:
Read the freeze frame data using the SSM4. A part of the engine running conditions under which the engine trouble occurred is recorded in the freeze frame data, which is useful for troubleshooting.

ES

1	Read DTC

(1) Connect the SSM4 to the DLC3.
(2) Turn the ignition switch to ON.
(3) Turn on the SSM4.
(4) Perform test drive. (Refer to "Test drive" under "Description of functions")
WARNING:
When performing this driving test, always observe the applicable traffic laws such as the speed limit.
(5) Follow the SSM4 on-screen instructions to check the DTC. (Refer to ES - 28)

Result

Result	Go to
P0068 is output	A
DTCs other than P0068 are output	B

B → To corresponding DTC chart (refer to ES - 12)

A

2	Intake system inspection

(1) Inspect the intake system. (Refer to IE - 4)

NG → Repair or replacement of intake system

OK

3	PCV hose connection check

(1) Check the PCV hose for poor connections and damage.
Criteria: The PCV hose is properly connected and is not damaged.

NG → Repair or replacement of the PCV hose

OK

4	Vacuum sensor replacement

(1) Replace vacuum sensor. (Refer to ES - 704)

Next

5	Perform test drive for operation check

(1) Connect the SSM4 to the DLC3.
(2) Turn the ignition switch to ON.
(3) Turn on the SSM4.
(4) Follow the SSM4 on-screen instructions to clear the DTCs. (Refer to ES - 28)
(5) Turn the ignition switch to OFF, and wait for 30 seconds.
(6) Turn the ignition switch to ON.
(7) Turn on the SSM4.
(8) Start the engine and warm up.
(9) Perform test drive. (Refer to "Test drive" under "Description of functions")
WARNING:
When performing this driving test, always observe the applicable traffic laws such as the speed limit.
(10) Check the results.

ES

Result

Result	Go to
Normal	A
Malfunction	B

B → Replacement of the engine control computer (Refer to ES - 670)

A

Complete

DTC	P0071	Ambient Air Temperature Sensor Circuit "A" Range/ Performance

Circuit description

DTC No.	DTC detection condition	Suspected parts
P0071	Ambient temp. after engine startup - engine coolant temp. at engine startup	• Ambient Temperature Sensor

Monitor strategy

Related DTCs	
Required Sensors/Components (Main)	Oxygen sensor
Required Sensors/Components (Related)	-
Frequency of Operation	1 time
Duration	Less than 1 second
MIL Operation	2 operation cycle
Sequence of Operation	None

ENABLING CONDITIONS

Overlap prohibited DTC	

Battery voltage	10.9V or more
Soak time	21600 seconds or more
Block heater judgment	Complete
Block heater operation	Not operating

Block heater judgment Duration while rear oxygen sensor output voltage is less than 0.55 V	550 r/min or more
When conditions are met, the state is judged as "Block heater is not operating". Σ (engine coolant temp. - engine coolant temp. at engine startup)	-10°C (-18°F) or more

TYPICAL MALFUNCTION THRESHOLDS

|ambient temp. in 30s after engine startup - intake air temp. in 30s after engine startup]	More than 20°C (36°F) (varies depending on the intake air temperature)
|Ambient temperature when the engine is started - engine coolant temperature when the engine is started|	More than 25°C (45°F)

Description of functions

Test drive

Perform test drive to check if the DTC recurs.

1. Connect the SSM4 to the DLC3.
2. Turn the ignition switch to ON.
3. Turn on the SSM4.
4. Follow the SSM4 on-screen instructions to clear the DTCs. (Refer to ES - 28)
5. Turn the ignition switch to OFF, and wait for 30 seconds.
6. Turn the ignition switch to ON.
7. Turn on the SSM4.
8. Select the following menu items using the SSM4. : [Each System] / [Engine Control System] / [Data monitor] / [Coolant Temp./ Intake Air Temp.]
9. Confirm that the engine coolant temperature and intake air temperature meet the condition described below.
   Condition: |Engine coolant temperature - intake air temperature| is 5°C {9°F} or less
   NOTE:
   If the condition is not met, turn the ignition switch to OFF, and wait until the condition is met.
10. If the condition is met, start the engine, and let it idle for 2 minutes or more.
    NOTE:
    Do not move the select lever from "P" or "N" range while the engine is idling.
11. Follow the SSM4 on-screen instructions to check the DTC. (Refer to ES - 28)

Inspection steps

1	Check for other DTCs.

(1) Connect the SSM4 to the DLC3.
(2) Turn the ignition switch to ON.
(3) Check the diagnostic codes using SSM4.

Result

Result	Go to
No DTCs are output.	A
DTCs are output.	B

B → Go to "List of diagnostic codes" (Refer to ES - 12)

A

2	Checking current data

(1) Connect the SSM4 to the DLC3.
(2) Turn the ignition switch to ON.
(3) Turn on the SSM4.
(4) Read the value of [Ambient Air Temperature] using the SSM4.
(5) Read the change in the [Ambient Air Temperature] value, while applying hot air and cold air to the ambient temperature sensor with a hair dryer.

ES

Result

Result	Go to
The [Ambient Air Temperature] value changes when it is heated and cooled.	A
The [Ambient Air Temperature] value does not change when it is heated and cooled.	B

B → Change the ambient temperature sensor.

A

Repair a poor contact of ECM connectors.

DTC	P0072	Ambient Air Temperature Sensor Circuit "A" Low

MONITOR STRATEGY

Related DTCs	
Frequency of Operation	1 time
Duration	Less than 2.5 seconds
MIL Operation	Immediately after
Sequence of Operation	

TYPICAL ENABLING CONDITIONS

12V battery system voltage	10.9V or more

TYPICAL MALFUNCTION THRESHOLDS

AAT sensor output voltage	Less than 0.89 V {more than 92.6°C (198.7°F)}

Description of functions
Test drive
Perform test drive to check if the DTC recurs.
1. Connect the SSM4 to the DLC3.
2. Turn the ignition switch to ON.
3. Turn on the SSM4.
4. Follow the SSM4 on-screen instructions to clear the DTCs. (Refer to ES - 28)
5. Turn the ignition switch to OFF, and wait for 30 seconds.
6. Turn the ignition switch to ON.
7. Turn on the SSM4.

8. Start the engine.
   NOTE:
   If the engine cannot be started, crank the engine for 10 seconds or more.
9. Idle the engine for 20 seconds or more.
10. Follow the SSM4 on-screen instructions to check the DTC. (Refer to ES - 28)

Inspection steps

1	Reading diagnostic codes

(1) Connect the SSM4 to the DLC3.
(2) Turn the ignition switch to ON.
(3) Turn on the SSM4.
(4) Check the DTC using SSM4.
(5) Follow the SSM4 on-screen instructions to check the DTC. (Refer to ES - 12)

Result

Result	Go to
DTCs are not output.	A
P0072B or P0073 is output.	B

B → Check the combination meter.

A

The circuit returns to normal at this point even if a DTC is detected. Reproduce the faulty condition and perform the diagnosis again.

DTC	P0073	Ambient Air Temperature Sensor Circuit "A" High

MONITOR STRATEGY

Related DTCs	
Frequency of Operation	1 time
Duration	Less than 2.5 seconds
MIL Operation	Immediately after
Sequence of Operation	

TYPICAL ENABLING CONDITIONS

12V battery system voltage	10.9V or more

TYPICAL MALFUNCTION THRESHOLDS

AAT sensor output voltage	More than 3.29 V {less than -57.1°C (-70.8°F)}

Description of functions
Test drive
Perform test drive to check if the DTC recurs.
1. Connect the SSM4 to the DLC3.
2. Turn the ignition switch to ON.
3. Turn on the SSM4.
4. Follow the SSM4 on-screen instructions to clear the DTCs. (Refer to ES - 28)
5. Turn the ignition switch to OFF, and wait for 30 seconds.

6. Turn the ignition switch to ON.
7. Turn on the SSM4.
8. Start the engine.
   NOTE:
   If the engine cannot be started, crank the engine for 10 seconds or more.
9. Idle the engine for 20 seconds or more.
10. Follow the SSM4 on-screen instructions to check the DTC. (Refer to ES - 28)

Inspection steps

ES

1	Reading diagnostic codes

(1) Connect the SSM4 to the DLC3.
(2) Turn the ignition switch to ON.
(3) Turn on the SSM4.
(4) Check the DTC using SSM4.
(5) Follow the SSM4 on-screen instructions to check the DTC. (Refer to ES - 12)

Result

Result	Go to
DTCs are not output.	A
P0072B or P0073 is output.	B

B → Check the combination meter.

A

The circuit returns to normal at this point even if a DTC is detected. Reproduce the faulty condition and perform the diagnosis again.

DTC	P0087	Fuel Rail/System Pressure - Too Low

Circuit description

The high pressure fuel system of the direct injection system consists of electromagnetic spill valves that adjust injection amount of high-pressure fuel, camshaft-driven plungers that pressurize fuel, and check valve that mechanically opens and closes path leading to the fuel delivery pipes. Fuel pump ASSY (high-pressure side) is installed to the cylinder head cover, and it is driven by the cam of the intake camshaft in the engine left bank. The pump plunger, driven by the rotating camshaft, moves up and down to pressurize fuel. The pressurized fuel pushes and opens the check valve, and is pumped into the fuel delivery pipes. The engine control computer manages electromagnetic spill valve to adjust the fuel pressure. In order to maintain the target fuel pressure, the engine control computer monitors the pressure with the signal from the fuel pressure sensor. When the fuel pressure of the fuel delivery pipe abnormally rises, the relief valve integrated into the fuel pump ASSY (high-pressure side) opens and allows the fuel to return to the fuel tank.

DTC No.	DTC detection condition	Suspected parts
P0087	Fuel pressure is lower than the target. (1 trips detection logic)	•Fuel leakage •Fuel pipe (fuel tank - high pressure pump [bank 1 or bank 2]) •Fuel pipe (high pressure fuel pump - fuel injector [Cylinder injection]) •Fuel injector (Cylinder injection) •High pressure fuel pump •Injector driver •Low pressure fuel pump •ECM

MONITOR DESCRIPTION

If fuel pressure keeps decreasing even after the ECM has commanded the high pressure fuel pump to close the spill control valve, the DTC is displayed.

Monitor strategy

Related DTCs	P0087: High pressure fuel system monitor functional check (Pressure too low)
Required Sensors/Components (Main)	Fuel pressure sensor
Required Sensors/Components (Related)	-
Frequency of Operation	Continuous
Duration	10 seconds
MIL Operation	Immediately after
Sequence of Operation	None

TYPICAL ENABLING CONDITIONS

Elapsed time after starting the engine	10 seconds or more
Time elapsed after fuel cutoff	More than 2 seconds
Target fuel pressure variation for 64 msec	2.4 MPa {24.5 kgf/cm^2, 350 psig} or less
Direct injection ratio	More than 0%

TYPICAL MALFUNCTION THRESHOLDS

Actual fuel pressure - target fuel pressure	Less than -3.5 MPa {-35.7 kgf/cm^2, -510 psig}

Description of functions

Test drive

Perform test drive to check if the DTC recurs.

NOTE:

Both of test drive A and B can recur the diagnostic code.

Test drive A

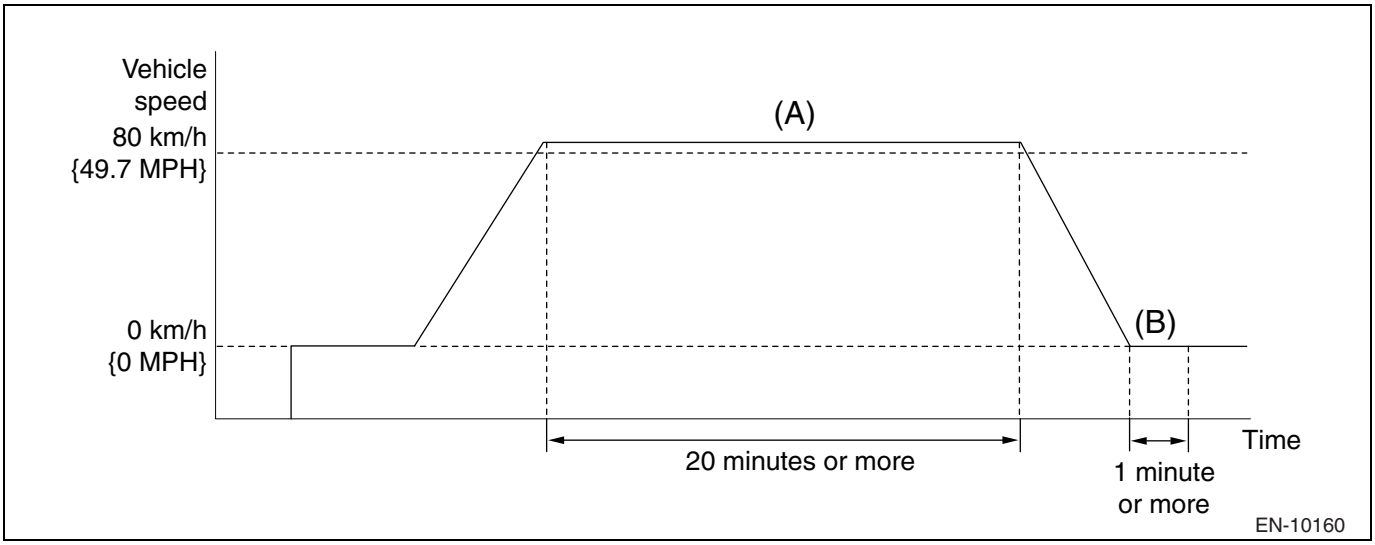

1. Connect the SSM4 to the DLC3.
2. Turn the ignition switch to ON.
3. Turn on the SSM4.
4. Follow the SSM4 on-screen instructions to clear the DTCs. (Refer to ES - 28)
5. Turn the ignition switch to OFF, and wait for 30 seconds.
6. Turn the ignition switch to ON.
7. Turn on the SSM4.
8. Start the engine and let it warm up until the engine coolant temperature stabilizes. (at 75°C {167°F} or more).
9. Perform driving test as follows.
   WARNING:
   When performing this driving test, always observe the applicable traffic laws such as the speed limit.
   (a) Drive at 80 km/h {49.7 MPH} or more for 20 minutes or more. (A)
   (b) Stop the vehicle.
   (c) Idle the engine for 1 minute or more. (B)
10. Follow the SSM4 on-screen instructions to check the DTC. (Refer to ES - 28)

Test drive B

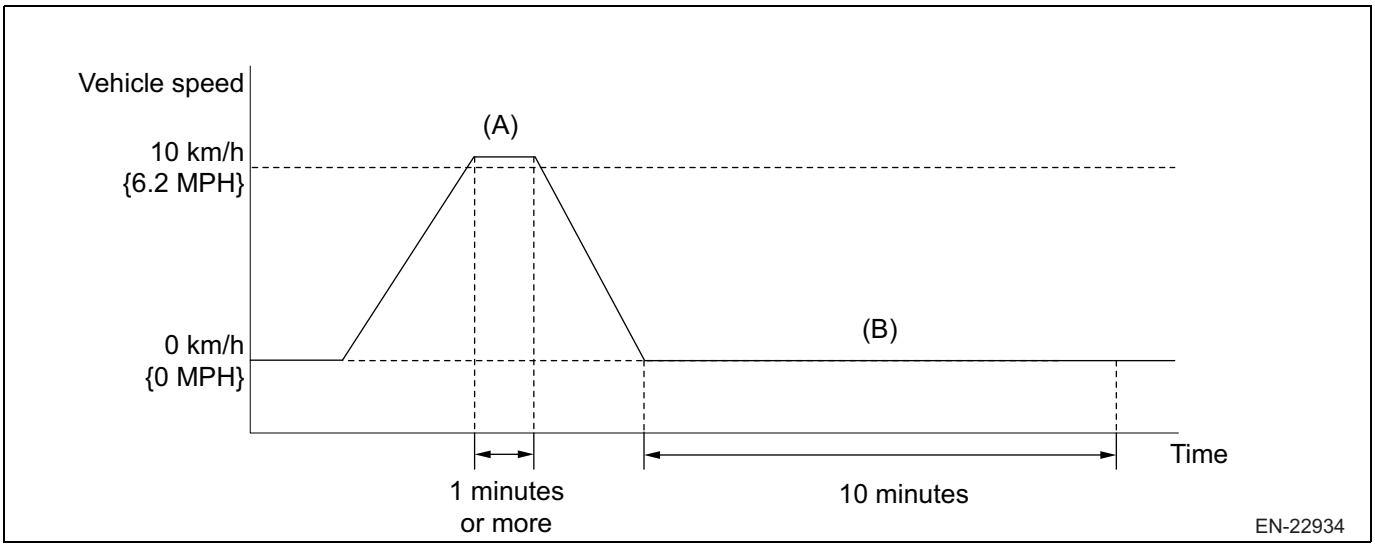

1. Connect the SSM4 to the DLC3.
2. Turn the ignition switch to ON.
3. Turn on the SSM4.
4. Follow the SSM4 on-screen instructions to clear the DTCs. (Refer to ES - 28)
5. Turn the ignition switch to OFF, and wait for 30 seconds.
6. Turn the ignition switch to ON.
7. Turn on the SSM4.

8. Start the engine.
9. Perform driving test as follows.
   WARNING:
   When performing this driving test, always observe the applicable traffic laws such as the speed limit.
   (a) Drive at 10 km/h {6.2 MPH} or more for 1 minute or more. (A)
   (b) Stop the vehicle.
   (c) Idle the engine for 10 minutes or more. (B)
10. Follow the SSM4 on-screen instructions to check the DTC. (Refer to ES - 28)

Inspection steps

NOTE:

Read the freeze frame data using the SSM4. A part of the engine running conditions under which the engine trouble occurred is recorded in the freeze frame data, which is useful for troubleshooting.

1	Fuel leakage check (visual inspection)

(1) Check for fuel leakage.
Criteria: There is no fuel leakage

NG → Repair or replace fuel leaking components

OK

2	Read DTC

(1) Connect the SSM4 to the DLC3.
(2) Turn the ignition switch to ON.
(3) Follow the SSM4 on-screen instructions to check the DTC. (Refer to ES - 28)

Result

Result	Go to
P0087 is output	A
DTCs other than P0087 are output	B

NOTE:
If any DTCs other than P0087 are output, troubleshoot them first.

B → To corresponding DTC chart (refer to ES - 12)

A

3	Has the engine ever stopped because it ran out of gas?

(1) Ask your customer if the engine ever has stopped due to lack of fuel.

Result

Result	Go to
Engine never has stalled	A
Engine has stalled before	B

B → The DTC was recorded due to a lack of fuel situation during driving that occurred in the past

A

4	Reading of SSM4 data (fuel pressure)

(1) Connect the SSM4 to the DLC3.
(2) Start the engine.
(3) Select the following menu items using the SSM4. : [Each System] / [Engine Control System] / [Data monitor] / [Fuel Rail Pressure]
(4) Inspect a change in fuel pressure when the engine is raced.

Result

ES

Result	Go to
Fuel pressure varies	A
Fuel pressure does not rise	B
Fuel pressure does not vary	C

B → Go to Step 7.

C → Replacement of the fuel pressure sensor (Refer to FU - 41)

A

5	Performing of SSM4 [Active Test] ([Control the Fuel Pump Duty])

(1) Connect the SSM4 to the DLC3.
(2) Turn the ignition switch to ON.
(3) Select the following menu items using the SSM4. : [Each System] / [Engine Control System] / [Work Support] / [Active Test] / [Control the Fuel Pump Duty]
(4) In the active test, check operation noise of the fuel pump (low-pressure side) with 80 % of fuel pump duty cycle.
Criteria: Operating sound is heard.

NG → Inspection of fuel pump control system (low-pressure side) (Refer to ES - 602)

OK

6	Fuel pressure inspection (low-pressure side)

NOTE:
Check the fuel pressure (low-pressure side). (Refer to FU - 9)

NG → Replacement of fuel pressure regulator ASSY (Refer to FU - 49)

OK

7	Fuel leakage check (high-pressure fuel system)

(1) Connect the SSM4 to the DLC3.
(2) Start the engine.
(3) Select the following menu items using the SSM4. : [Each System] / [Engine Control System] / [Work Support] / [Active Test] / [Fuel Rail Pressure]
(4) Check a fuel pressure variation when the engine is stopped.

NOTE:
After turning IG to OFF, immediately turn the ignition switch to ON.

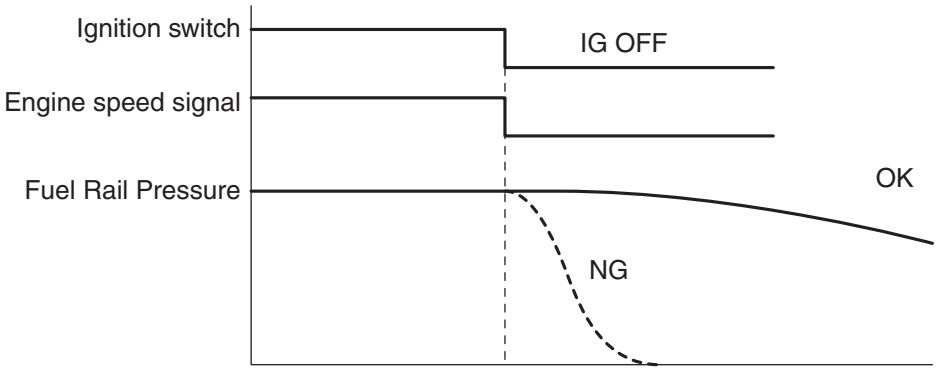

Y

Result

Result	Go to
Fuel pressure suddenly decreases	A
Fuel pressure stays almost constant or varies gradually	B

B → Go to Step 9.

A

8	Fuel pump ASSY (high-pressure side) unit inspection

(1) Perform fuel pump ASSY (high-pressure side) unit inspection. (Refer to FU - 61)

NG → Replacement of fuel pump ASSY (high-pressure side) (Refer to FU - 58)

OK

9	Injector driver replacement

(1) Replace the injector driver. (Refer to FU - 43)

Next

10	Clear DTC

(1) Connect the SSM4 to the DLC3.
(2) Turn the ignition switch to ON.

(3) Follow the SSM4 on-screen instructions to clear the DTCs. (Refer to ES - 28)
(4) Turn the ignition switch to OFF, and wait for 30 seconds.

Next

11	Perform test drive for operation check

(1) Perform test drive. (Refer to "Test drive" under "Description of functions")
WARNING:
When performing this driving test, always observe the applicable traffic laws such as the speed limit.
(2) Check the results.

Result

Result	Go to
Malfunction	A
Normal	B

B → Complete

A

12	Replacement of fuel pump ASSY (high-pressure side)

(1) Replace the fuel pump ASSY (high-pressure side). (Refer to FU - 58)
NOTE:
If the fuel pump ASSY (high-pressure side) has been already replaced in Step 8, go to Step 15 without replacing the fuel pump ASSY (high-pressure side).

Next

13	Clear DTC

(1) Connect the SSM4 to the DLC3.
(2) Turn the ignition switch to ON.
(3) Follow the SSM4 on-screen instructions to clear the DTCs. (Refer to ES - 28)
(4) Turn the ignition switch to OFF, and wait for 30 seconds.

Next

14	Perform test drive for operation check

(1) Perform test drive. (Refer to "Test drive" under "Description of functions")
WARNING:
When performing this driving test, always observe the applicable traffic laws such as the speed limit.
(2) Check the results.

Result

Result	Go to
Malfunction	A

Result	Go to
Normal	B

B → Complete

A

15	Fuel leakage check (high-pressure fuel system)

(1) Connect the SSM4 to the DLC3.
(2) Start the engine.
(3) Select the following menu items using the SSM4. : [Each System] / [Engine Control System] / [Data monitor] / [Fuel Rail Pressure]
(4) Check a fuel pressure variation when the engine is stopped.
NOTE:
After turning IG to OFF, immediately turn the ignition switch to ON.

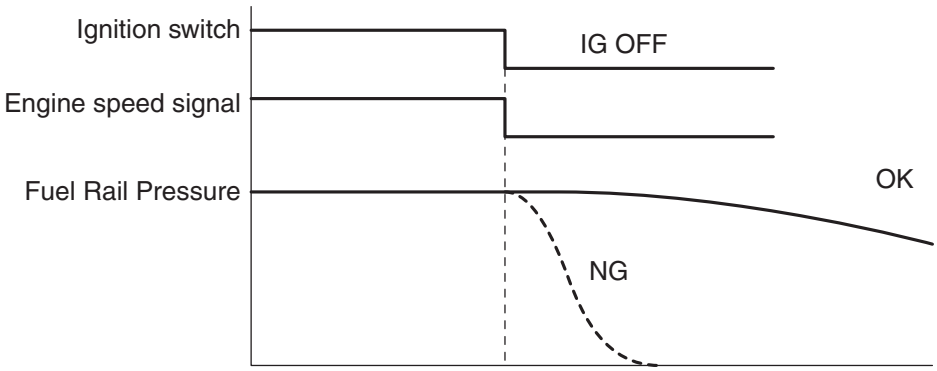

Y

Result

Result	Go to
Fuel pressure stays almost constant or varies gradually	A
Fuel pressure suddenly decreases	B

B → Replacement of fuel injector ASSY (direct injection side) (Refer to FU - 31)

A

Replacement of the engine control computer (Refer to ES - 670)

DTC	P0088	Fuel Rail/System Pressure - Too High

Circuit description

The high pressure fuel system of the direct injection system consists of electromagnetic spill valves that adjust injection amount of high-pressure fuel, camshaft-driven plungers that pressurize fuel, and check valve that mechanically opens and closes path leading to the fuel delivery pipes. Fuel pump ASSY (high-pressure side) is installed to the cylinder head cover, and it is driven by the cam of the intake camshaft in the engine left bank. The pump plunger, driven by the rotating camshaft, moves up and down to pressurize fuel. The pressurized fuel pushes and opens the check valve, and is pumped into the fuel delivery pipes. The engine control computer manages electromagnetic spill valve to adjust the fuel pressure. In order to maintain the target fuel pressure, the engine control computer monitors the pressure with the signal from the fuel pressure sensor. When the fuel pressure of the fuel delivery pipe abnormally rises, the relief valve integrated into the fuel pump ASSY (high-pressure side) opens and allows the fuel to return to the fuel tank.

DTC No.	DTC detection condition	Suspected parts
P0088	Fuel pressure exceeds the target value. (1 trips detection logic)	•High pressure fuel pump •ECM

MONITOR DESCRIPTION

If fuel pressure does not drop even after the ECM has commanded the high pressure fuel pump to open the spindle control valve, the DTC is displayed. Also, if there is a slight difference in fuel pressure between before and after the fuel relief valve, the DTC is displayed.

Monitor strategy

Related DTCs	P0088: High pressure fuel system monitor functional check (Pressure too high)
Required Sensors/Components (Main)	Fuel pressure sensor
Required Sensors/Components (Related)	-
Frequency of Operation	Continuous
Duration	10 seconds
MIL Operation	Immediately after
Sequence of Operation	None

TYPICAL ENABLING CONDITIONS

Elapsed time after starting the engine	10 seconds or more
Time elapsed after fuel cutoff	More than 2 seconds
Target fuel pressure variation for 64 msec	2.4 MPa {24.5 kgf/cm^2, 350 psi} or less
Direct injection ratio	More than 0%

TYPICAL MALFUNCTION THRESHOLDS

Actual fuel pressure - target fuel pressure	More than 6 MPa {61.2 kgf/cm^2, 870 psi}

Description of functions

Test drive

Perform test drive to check if the DTC recurs.

NOTE:

Both of test drive A and B can recur the diagnostic code.

Test drive A

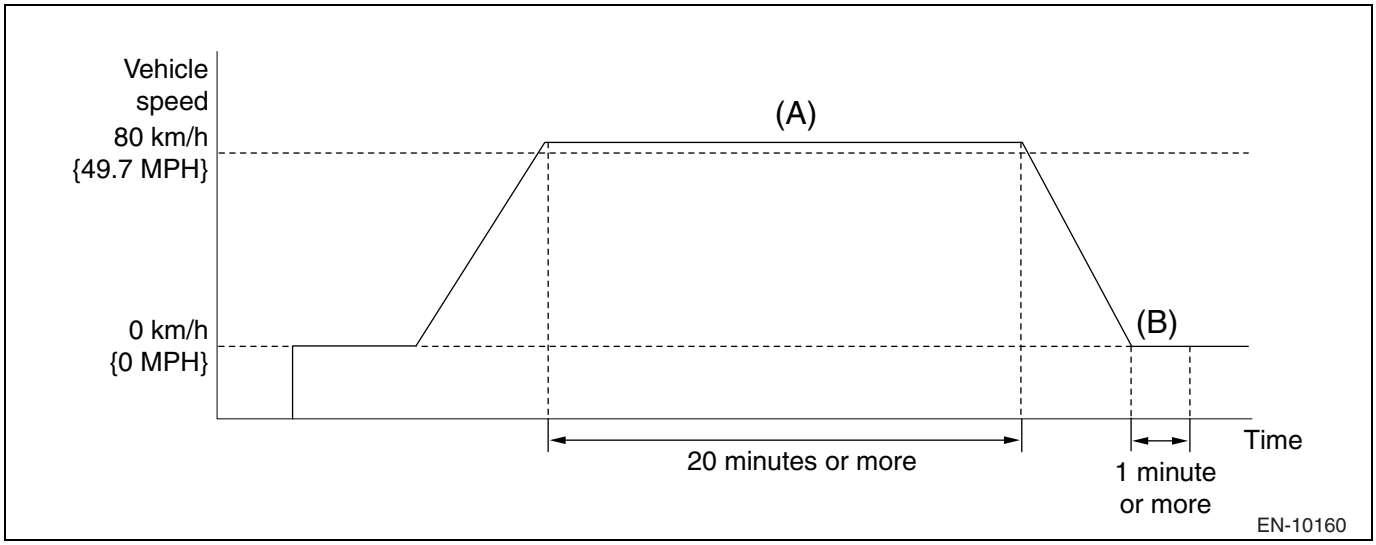

1. Connect the SSM4 to the DLC3.
2. Turn the ignition switch to ON.
3. Turn on the SSM4.
4. Follow the SSM4 on-screen instructions to clear the DTCs. (Refer to ES - 28)
5. Turn the ignition switch to OFF, and wait for 30 seconds.
6. Turn the ignition switch to ON.
7. Turn on the SSM4.
8. Start the engine and let it warm up until the engine coolant temperature stabilizes. (at 75°C {167°F} or more).
9. Perform driving test as follows.
   WARNING:
   When performing this driving test, always observe the applicable traffic laws such as the speed limit.
   (a) Drive at 80 km/h {49.7 MPH} or more for 20 minutes or more. (A)
   (b) Stop the vehicle.
   (c) Idle the engine for 1 minute or more. (B)
10. Follow the SSM4 on-screen instructions to check the DTC. (Refer to ES - 28)

Test drive B

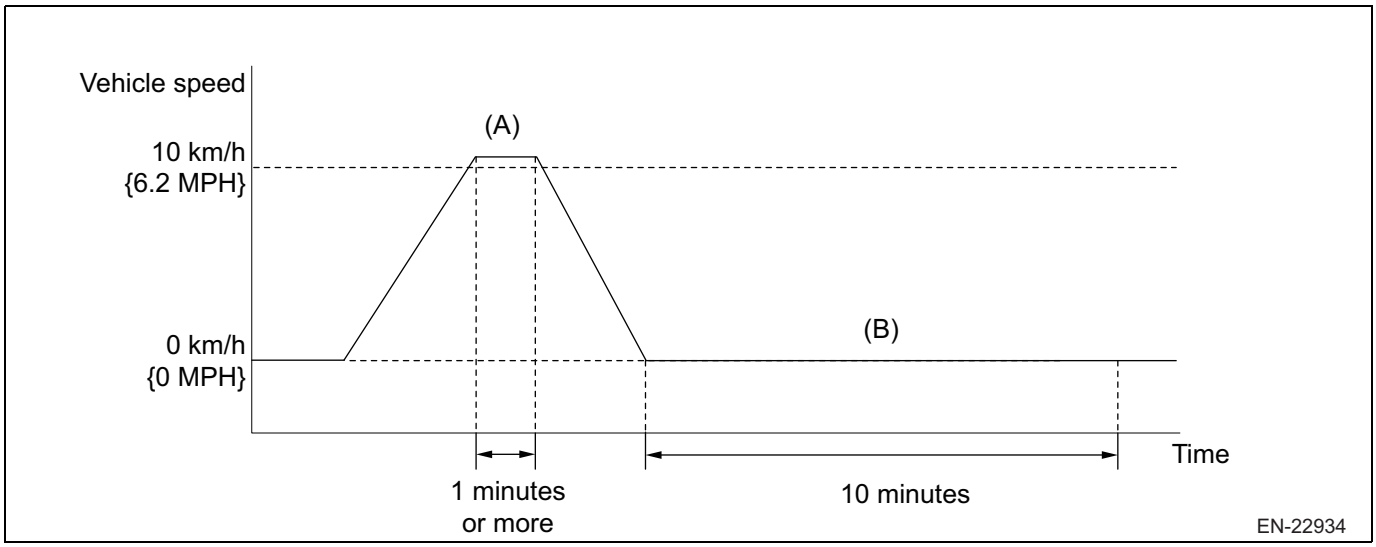

1. Connect the SSM4 to the DLC3.
2. Turn the ignition switch to ON.
3. Turn on the SSM4.
4. Follow the SSM4 on-screen instructions to clear the DTCs. (Refer to ES - 28)
5. Turn the ignition switch to OFF, and wait for 30 seconds.
6. Turn the ignition switch to ON.
7. Turn on the SSM4.

8. Start the engine.
9. Perform driving test as follows.
   WARNING:
   When performing this driving test, always observe the applicable traffic laws such as the speed limit.
   (a) Drive at 10 km/h {6.2 MPH} or more for 1 minute or more. (A)
   (b) Stop the vehicle.
   (c) Idle the engine for 10 minutes or more. (B)
10. Follow the SSM4 on-screen instructions to check the DTC. (Refer to ES - 28)

ES

Inspection steps

NOTE:

Read the freeze frame data using the SSM4. A part of the engine running conditions under which the engine trouble occurred is recorded in the freeze frame data, which is useful for troubleshooting.

1	Read DTC

(1) Connect the SSM4 to the DLC3.
(2) Turn the ignition switch to ON.
(3) Follow the SSM4 on-screen instructions to check the DTC. (Refer to ES - 28)

Result

Result	Go to
P0088 is output	A
DTCs other than P0088 are output	B

NOTE:
If any DTCs other than P0088 are output, troubleshoot them first.

B → To corresponding DTC chart (refer to ES - 12)

A

2	Reading of SSM4 data ([Fuel Rail Pressure])

(1) Connect the SSM4 to the DLC3.
(2) Start the engine.
(3) Select the following menu items using the SSM4. : [Each System] / [Engine Control System] / [Data monitor] / [Fuel Rail Pressure]
(4) Check a fuel pressure variation when the engine is raced.
Criteria: Fuel pressure varies

NG → Replacement of the fuel pressure sensor (Refer to FU - 41)

OK

3	Replacement of fuel pump ASSY (high-pressure side)

(1) Replace the fuel pump ASSY (high-pressure side). (Refer to FU - 58)

Next

4	Clear DTC

(1) Connect the SSM4 to the DLC3.
(2) Turn the ignition switch to ON.

(3) Follow the SSM4 on-screen instructions to clear the DTCs. (Refer to ES - 28)
(4) Turn the ignition switch to OFF, and wait for 30 seconds.

Next

5	Perform test drive for operation check

(1) Perform test drive. (Refer to "Test drive" under "Description of functions")
WARNING:
When performing this driving test, always observe the applicable traffic laws such as the speed limit.
(2) Check the results.

ES

Result

Result	Go to
Normal	A
Malfunction	B

B → Replacement of the engine control computer (Refer to ES - 670)

A

Complete

DTC	P0101	Air flow sensor characteristic

Circuit description
For a circuit description, refer to ES - 167.

DTC No.	DTC detection condition	Suspected parts
P0101	When any of the following conditions is met (2 trip detection logic): •When the throttle position is at 10° or more, intake air flow meter SUB-ASSY voltage is less than 1.13 V for 5 seconds or longer. •When the throttle position is less than 3.8°, intake air flow meter SUB-ASSY voltage is 1.88 V or more for 10 seconds or longer.	•Intake air flow meter SUB-ASSY •Intake system •PCV hose connection

MONITOR DESCRIPTION
The intake air flow meter SUB-ASSY is a sensor that measures incoming air flow from the throttle valve. The ECM determines a length of time fuel is injected based on this information to provide an appropriate air/fuel ratio. The intake air flow meter SUB-ASSY is integrated with platinum filament, which is contact with induction air. When a specific amount of voltage is applied from the ECM, it is heated to a predetermined temperature. Also, induction air cools the platinum filaments and the integrated thermistor to cause a change in resistance. In order to maintain an electric current at a constant level, the electric current which is sent to the intake air flow meter SUB-ASSY is adjusted by the ECM. The voltage level is proportional to a flow rate measured by the sensor. The ECM uses this information is used to calculate an amount of induction.
An average engine load value ratio is monitored by the ECM to check the intake air flow meter SUB-ASSY for malfunction. An average engine load value ratio is a result of comparison between an average engine load as calculated from the intake air flow meter SUB-ASSY output and an average engine load as estimated based on operating conditions (such as engine speed and throttle opening angle). When the average engine load value ratio is less than a threshold value, the ECM judges that induction

flow rate is low. On the other hand, when the average engine load value ratio exceeds the threshold value, the ECM judges that induction flow rate is high.
If this condition is detected consecutively in 2 drive cycles, the MIL illuminates and the DTC is stored.

Monitor strategy

Related DTCs	P0101: Mass air flow meter rationality check
Required Sensors/Components (Main)	Intake air flow meter SUB-ASSY
Required Sensors/Components (Related)	Crankshaft position sensor Camshaft position sensor E.F.I. water temperature sensor Throttle position sensor
Frequency of Operation	Continuous
Duration	5 seconds: Low pressure side monitor 5 seconds: High pressure side monitor
MIL Operation	2 operation cycle
Sequence of Operation	None

TYPICAL ENABLING CONDITIONS
All

Overlap prohibited DTC	P0068, P0107, P0108 (Vacuum (MAP) sensor) P0102, P0103 (intake air flow (MAF) meter) P0117, P0118, P0125 (engine coolant temperature (ECT) sensor) P0122, P0123, P0222, P0223 (Throttle position sensor) P0335, P0336 (crankshaft position sensor) P0340, P0345 (camshaft position sensor - intake with variable valve timing (VVT)) P0506, P0507 (idle speed control (ISC)) P0604, P0605 (ECM ROM), P0606 P1160 (throttle return spring) P2101, P2102 (Throttle actuator control motor) P2109 (Throttle position sensor minimum stop) P2119 (Throttle actuator control) P2122, P2123, P2127, P2128 (Accelerator Pedal Position Sensor (APPS) circuit) P2135 (Throttle position sensor (TPS) degree of correlation) P2138 (Accelerator pedal position sensor (APPS) degree of correlation)

Low pressure side monitor

Engine Speed	1600 RPM or more
Throttle opening angle	9.6% or more
Intake manifold pressure (with correction of atmosphere pressure)	73.33 kPa {550.1 mmHg} or more

High pressure side monitor

Engine Speed	550 to 850 r/min
Throttle opening angle	Less than 4%
Intake manifold pressure (with correction of atmosphere pressure)	Less than 48 kPa {360.1 mmHg}

TYPICAL MALFUNCTION THRESHOLDS
Low pressure side monitor

Intake air flow meter SUB-ASSY voltage [Mass Air Flow]	Less than 1.76 to 2.77 V (10.1 to 51 g/sec) (varies depending on engine speed)

High pressure side monitor

Intake air flow meter SUB-ASSY voltage (fuel system is in rich condition) [Mass Air Flow]	1.5 to 1.7 V (5.8 to 8.9 g/sec) or more (varies depending on engine speed)

Circuit figure

For a circuit figure, refer to ES - 169.

Description of functions

Test drive

Perform test drive to check if the DTC recurs.

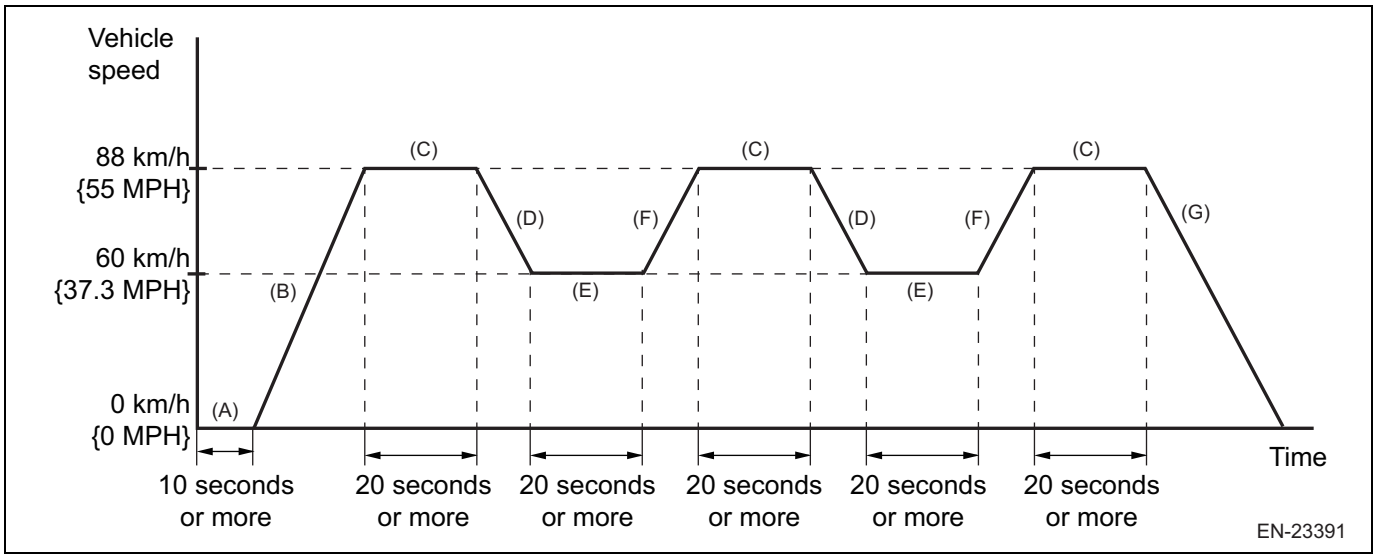

1. Connect the SSM4 to the DLC3.
2. Turn the ignition switch to ON.
3. Turn on the SSM4.
4. Follow the SSM4 on-screen instructions to clear the DTCs. (Refer to ES - 28)
5. Turn the ignition switch to OFF, and wait for 30 seconds.
6. Turn the ignition switch to ON.
7. Turn on the SSM4.
8. Start the engine and let it warm up until the engine coolant temperature stabilizes. (at 75°C {167°F} or more).
9. Perform driving test as follows.

   WARNING:

   When performing this driving test, always observe the applicable traffic laws such as the speed limit.

   (a) Move the select lever to "P" range or move the shift lever to the neutral position, and let the engine idle for 10 seconds or more. (A)
   (b) Depress the accelerator pedal half way, and accelerate to 88 km/h {55 MPH} or more. (B)
   (c) Drive at 88 km/h {55 MPH} or more for 20 seconds or more. (C)
   (d) Release the accelerator pedal, and decelerate to 60 km/h {37.3 MPH}. (D)
   (e) Drive at 60 km/h {37.3 MPH} or less for 20 seconds or more. (E)
   (f) Depress the accelerator pedal half way, and accelerate to 88 km/h {55 MPH} or more. (F)
   (g) Release the accelerator pedal, and stop the vehicle. (G)
10. Follow the SSM4 on-screen instructions to check the DTC. (Refer to ES - 28)

Inspection steps

CAUTION:

Before performing troubleshooting, check the fuse for this circuit.

NOTE:

Read the freeze frame data using the SSM4. A part of the engine running conditions under which the engine trouble occurred is recorded in the freeze frame data, which is useful for troubleshooting.

1	Read DTC

(1) Connect the SSM4 to the DLC3.
(2) Turn the ignition switch to ON.
(3) Turn on the SSM4.
(4) Perform test drive. (Refer to "Test drive" under "Description of functions")
WARNING:
When performing this driving test, always observe the applicable traffic laws such as the speed limit.
(5) Follow the SSM4 on-screen instructions to check the DTC. (Refer to ES - 28)

ES

Result

Result	Go to
P0101 is output	A
DTCs other than P0101 are output	B

NOTE:
If any DTCs other than P0101 are output, troubleshoot them first.

B → To corresponding DTC chart (refer to ES - 12)

A

2	Intake system inspection

(1) Inspect the intake system. (Refer to IE - 4)

NG → Repair or replacement of intake system

OK

3	Inspection of the PCV hose

(1) Check the PCV hose for poor connections and damage.
Criteria: The PCV hose is properly connected and is not damaged.

NG → Repair or replacement of the PCV hose

OK

4	Intake air flow meter SUB-ASSY replacement

(1) Replace the intake air flow meter SUB-ASSY. (Refer to ES - 675)

Next

5	Perform test drive for operation check

(1) Connect the SSM4 to the DLC3.
(2) Turn the ignition switch to ON.
(3) Turn on the SSM4.

(4) Follow the SSM4 on-screen instructions to clear the DTCs. (Refer to ES - 28)
(5) Turn the ignition switch to OFF, and wait for 30 seconds.
(6) Turn the ignition switch to ON.
(7) Turn on the SSM4.
(8) Start the engine and warm up.
(9) Perform test drive. (Refer to "Test drive" under "Description of functions")
WARNING:
When performing this driving test, always observe the applicable traffic laws such as the speed limit.
(10) Check the results.

Result

Result	Go to
Normal	A
Malfunction	B

B → Replacement of the engine control computer (Refer to ES - 670)

A → Complete

DTC	P0102	Mass Air Flow Circuit Low

DTC	P0103	Mass Air Flow Circuit High

Circuit description

Platinum filament is used for the intake air flow meter SUB-ASSY. This SUB-ASSY consists of a heater made of platinum filament, temperature sensor, and control circuit, which are integrated into a housing. The heater equipped in the bypass flow duct of the housing is cooled by the intake air flow, and the temperature sensor detects the change in temperature. With respect to the circuit configuration, the bridge circuit comprises the heater and temperature sensor. The work of the power transistor to control heater to maintain the predetermined temperature (causing voltage difference between A and B) is measured as the output voltage of the intake airflow meter SUB-ASSY.

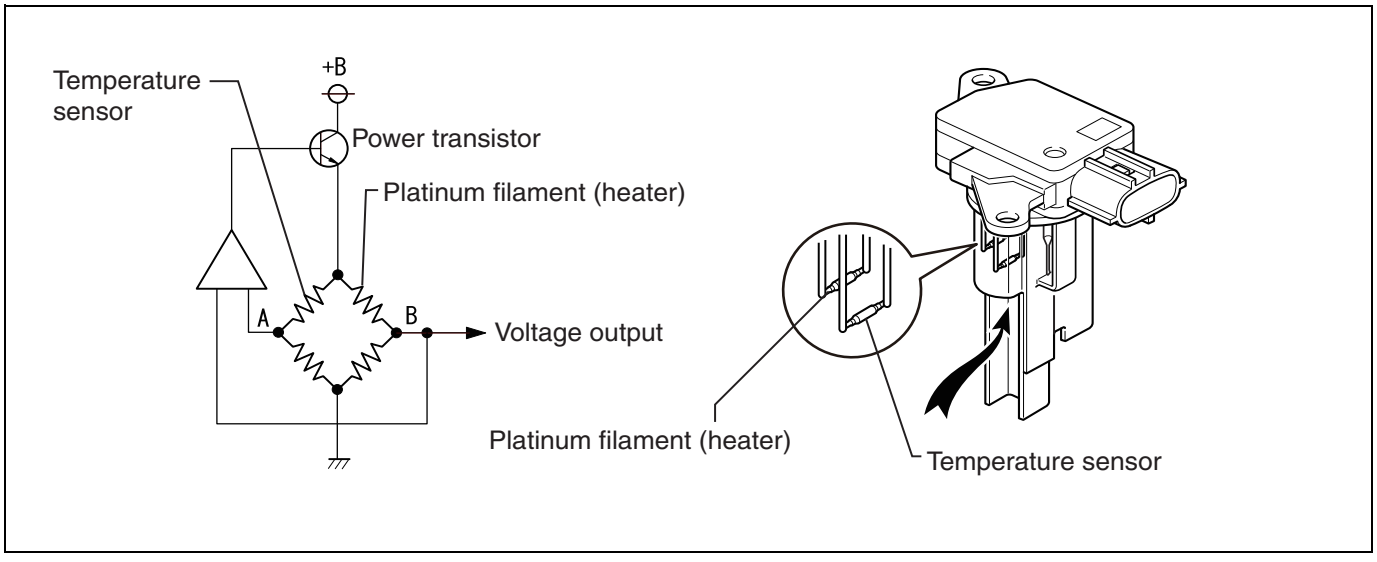

NOTE:
When either of these DTCs is stored, the engine control computer enters fail-safe mode. During fail-safe mode, the engine control computer calculates the ignition timing according to engine speed and throttle valve position. The engine control computer continues fail-safe mode operation until the normal condition is restored.

DTC No.	DTC detection condition	Suspected parts
P0102	Intake air flow meter SUB-ASSY voltage is 0.127 V or less for 0.5 seconds or longer. (1-trip detection logic)	•Open or short condition in intake air flow meter SUB-ASSY circuit •Intake air flow meter SUB-ASSY •ECM
P0103	Intake air flow meter SUB-ASSY voltage is 4.723V or more for 0.5 seconds or longer. (1-trip detection logic)	

NOTE:
After checking diagnostic code outputs, read the following menu items using the SSM4: BRZ inspection / Each system / Engine / Data monitor / [Mass Air Flow]

Intake air amount (g/s)	Content of malfunction
Approx. 0.0	• Open circuit in intake air flow meter SUB-ASSY power supply circuit • Open or short circuit in VG circuit
Approx. 655.35	• Open circuit in E2G circuit

CAUTION:
- Place the vehicle on a level surface in the workshop and check it with the engine stopped.
- Perform the inspection with the air cleaner ASSY installed.
- Do not use the exhaust duct to the exhaust tail pipe for suction.

MONITOR DESCRIPTION
When there is a malfunction in the intake air flow meter SUB-ASSY or open/short condition in the circuit, the voltage level falls out of the normal operation range. The ECM identifies this as intake air flow meter SUB-ASSY circuit failure and stores the DTCs.

Monitor strategy

Related DTCs	P0102: Mass air flow meter circuit continuity (Low voltage) P0103: Mass air flow meter circuit continuity (High voltage)
Required Sensors/Components (Main)	Intake air flow meter SUB-ASSY
Required Sensors/Components (Related)	-
Frequency of Operation	Continuous
Duration	0.5 seconds
MIL Operation	Immediately after
Sequence of Operation	None

TYPICAL ENABLING CONDITIONS

Overlap prohibited DTC	None

TYPICAL MALFUNCTION THRESHOLDS
P0102

Intake air flow meter SUB-ASSY voltage [Mass Air Flow]	Less than 0.127V {0.0g/sec}

P0103

Intake air flow meter SUB-ASSY voltage [Mass Air Flow]	4.723 V (248.1 g/sec) or more

Operation range

Intake air flow meter SUB-ASSY voltage [Mass Air Flow]	0.127 to 4.651 V (0.01 to 235.37 g/sec)

Circuit figure

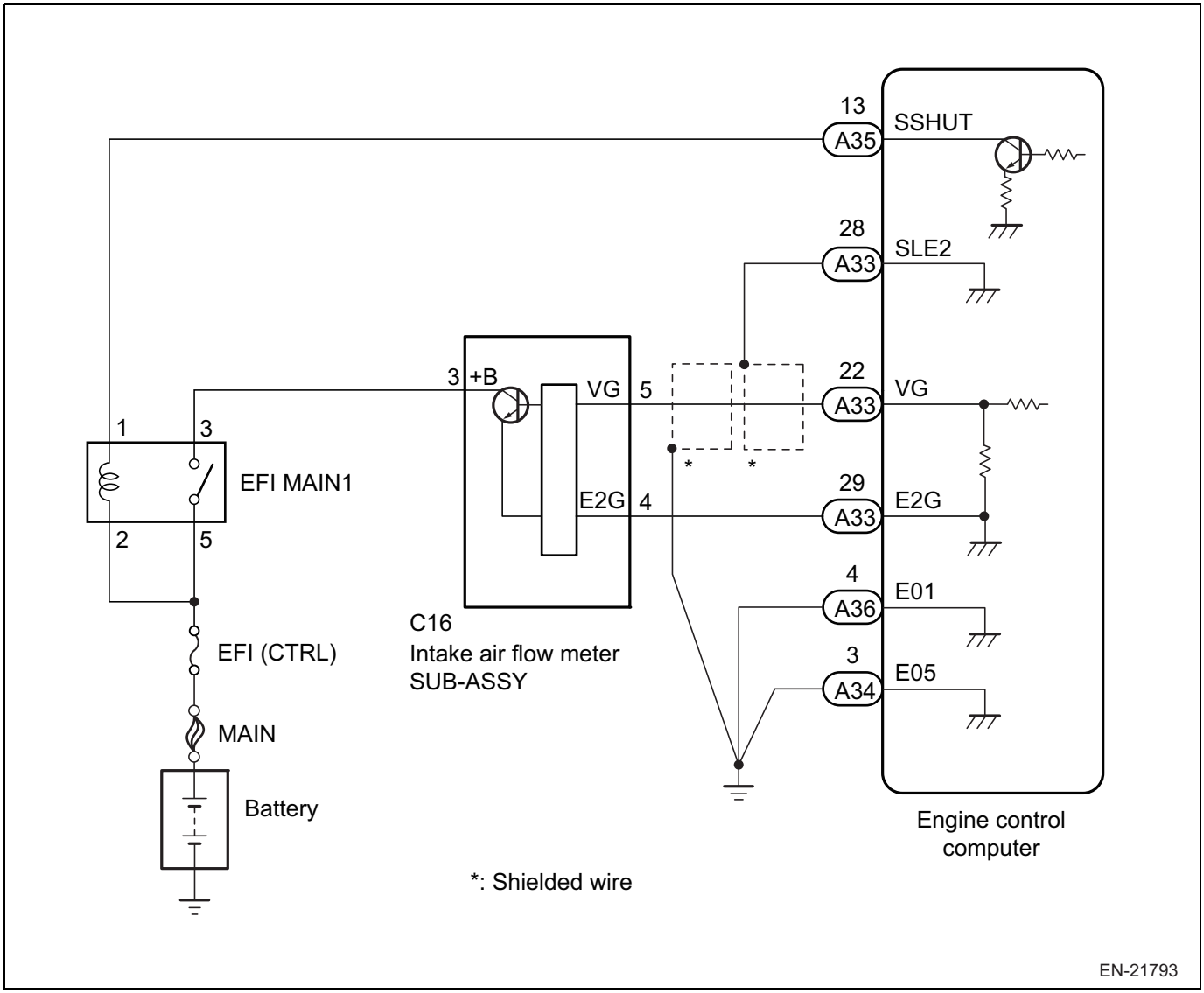

Description of functions

Test drive

Perform test drive to check if the DTC recurs.

1. Connect the SSM4 to the DLC3.
2. Turn the ignition switch to ON.
3. Turn on the SSM4.
4. Follow the SSM4 on-screen instructions to clear the DTCs. (Refer to ES - 28)
5. Turn the ignition switch to OFF, and wait for 30 seconds.
6. Turn the ignition switch to ON.
7. Turn on the SSM4.
8. Start the engine.
   NOTE:
   If the engine cannot be started, crank the engine for 10 seconds or more.
9. Idle the engine for 20 seconds or more.
10. Follow the SSM4 on-screen instructions to check the DTC. (Refer to ES - 28)

Inspection steps

CAUTION:

Before performing troubleshooting, check the fuse for this circuit.

NOTE:
Read the freeze frame data using the SSM4. A part of the engine running conditions under which the engine trouble occurred is recorded in the freeze frame data, which is useful for troubleshooting.

1	Read DTC

(1) Connect the SSM4 to the DLC3.
(2) Turn the ignition switch to ON.
(3) Turn on the SSM4.
(4) Follow the SSM4 on-screen instructions to check the DTC. (Refer to ES - 28)

ES

Result

Result	Go to
P0102 is output.	A
P0103 is output.	B

B → Go to Step 5.

A

2	Check wiring harness and connector (intake air flow meter SUB-ASSY power supply voltage)

NOTE:
For the inspection procedure and precautions for wiring harnesses and connectors, refer to IN - 36.

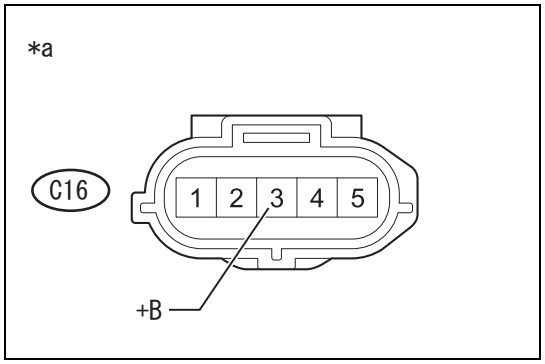

(1) Disconnect the connector of the intake air flow meter SUB-ASSY.
(2) Measure the voltage between the terminals.

Voltage

Inspection terminals	Inspection conditions	Standard value
C16-3 (+B) - chassis ground	IG ON	11 to 14 V

Captions in illustration

*a	Front side of vehicle wiring harness connector (intake air flow meter SUB-ASSY connector)

NG → Go to Step 7.

OK

3	Check wiring harness and connector (engine control computer - intake air flow meter SUB-ASSY)

NOTE:
For the inspection procedure and precautions for wiring harnesses and connectors, refer to IN - 36.
(1) Disconnect the connector for the engine control computer.
(2) Disconnect the connector of the intake air flow meter SUB-ASSY.
(3) Measure the resistance between the terminals. (For terminal arrangement, refer to ES - 36.)

Resistance (open circuit check)

Inspection terminals	Inspection conditions	Standard value
C33-22 (VG) - C16-5 (VG)	Always	Less than 1 Ω

Inspection terminals	Inspection conditions	Standard value
C33-29 (E2G) - C16-4 (E2G)	Always	Less than 1 Ω

Resistance (short circuit check)

Inspection terminals	Inspection conditions	Standard value
C33-22 (VG) and C16-5 (VG) - other terminals and chassis ground	Always	10 k Ωor more
C33-29 (E2G) and C16-4 (E2G) - other terminals and chassis ground	Always	10 k Ωor more

NG → Repair or replacement of wiring harness or connector

OK

4	Inspection of intake air flow meter SUB-ASSY

(1) Perform onboard inspection. (Refer to ES - 676)
(2) Perform unit inspection. (Refer to ES - 676)
(3) Perform function inspection of the intake air flow meter SUB-ASSY.
  (a) Connect the SSM4 to the DLC3.
  (b) Turn the ignition switch to ON.
  (c) Turn on the SSM4.
  (d) Select the following menu items using the SSM4. : [Each System] / [Engine Control System] / [Data monitor] / [Mass Air Flow]
  (e) Start the engine.
  (f) Make sure the mass air flow value changes when the engine is raced.
    Criteria: The value fluctuates.

NG → Replacement of intake air flow meter SUB-ASSY (Refer to ES - 675)

OK

Replacement of the engine control computer (Refer to ES - 670)

5	Check wiring harness and connector (intake air flow meter SUB-ASSY - chassis ground)

NOTE:
Refer to IN - 36for inspection procedure and precautions of wiring harness and connector.
(1) Disconnect the connector of the intake air flow meter SUB-ASSY.
(2) Measure the resistance between the terminals.

Resistance (open circuit check)

Inspection terminals	Inspection conditions	Standard value
C16-4 (E2G) - chassis ground	Always	Less than 1 Ω

NG → Go to Step 6.

OK

Replacement of intake air flow meter SUB-ASSY (Refer to ES - 675)

6	Check wiring harness and connector (engine control computer - intake air flow meter SUB-ASSY)

NOTE:
For the inspection procedure and precautions for wiring harnesses and connectors, refer to IN - 36.
(1) Disconnect the connector for the engine control computer.
(2) Disconnect the connector of the intake air flow meter SUB-ASSY.
(3) Measure the resistance between the terminals. (For terminal arrangement, refer to ES - 36.)

ES

Resistance (open circuit check)

Inspection terminals	Inspection conditions	Standard value
A33-29 (E2G) - C16-4 (E2G)	Always	Less than 1 Ω

Resistance (short circuit check)

Inspection terminals	Inspection conditions	Standard value
A33-29 (E2G) and C16-4 (E2G) - other terminals and chassis ground	Always	10 k Ωor more

NG → Repair or replacement of wiring harness or connector

OK

Replacement of the engine control computer (Refer to ES - 670)

7	Relay unit inspection (EFI MAIN1 relay)

(1) Perform unit inspection of EFI MAIN1 relay. (Refer to ES - 713)

NG → Relay replacement (EFI MAIN1 relay)

OK

8	Check wiring harness and connector (EFI MAIN1 relay - intake air flow meter SUB-ASSY)

NOTE:
For the inspection procedure and precautions for wiring harnesses and connectors, refer to IN - 36.
(1) Disconnect the connector of the intake air flow meter SUB-ASSY.
(2) Remove the EFI MAIN1 relay from the engine compartment relay block.
(3) Measure the resistance between the terminals.

Resistance (open circuit check)

Inspection terminals	Inspection conditions	Standard value
3 (EFI MAIN1 relay holder) - C16-3 (+B)	Always	Less than 1 Ω

Resistance (short circuit check)

Inspection terminals	Inspection conditions	Standard value
3 (EFI MAIN1 relay holder) and C16-3 (+B) - other terminals and chassis ground	Always	10 k Ωor more

CAUTION:
When using tester probes to take measurements at a holder, do not push them hard against the holder. Otherwise the holder could be damaged.

NG → Repair or replacement of wiring harness or connector

OK

Inspection of the ECM power supply system (Refer to ES - 642)

ES

DTC	P0107	Manifold Absolute Pressure/Barometric Pressure Circuit Low Input

DTC	P0108	Manifold Absolute Pressure/Barometric Pressure Circuit High Input

Circuit description
The sensor built in the air pressure sensor ASSY detects an intake manifold pressure as a voltage. Also, the air pressure sensor ASSY is not affected by air pressure variation caused by a change in altitude or other factors because it detects pressure inside the intake manifold via absolute pressure instead of barometric pressure as reference.

DTC No.	DTC detection condition	Suspected parts
P0107	Vacuum sensor voltage is 0.610V or less for 2.0 seconds or longer. (1-trip detection logic)	•Open or short condition in vacuum sensor circuit •Vacuum sensor •ECM
P0108	Vacuum sensor voltage is 3.906V or more for 2.0 seconds or longer. (1-trip detection logic)	

NOTE:
After checking diagnostic code outputs, read the following menu items using the SSM4: [Each System] / [Engine Control System] / [Data monitor] / [Mani. Absolute Pressure] (Refer to ES - 43)

Intake manifold pressure	Content of malfunction
Approx. 0 kPa	• Short circuit in PIM circuit and ground system • Short circuit in E1 circuit and PIM circuit
141 kPa or more	• Short circuit in VC circuit and PIM circuit • Open circuit in PIM circuit • Open circuit in E1 circuit

MONITOR DESCRIPTION
The ECM calculates the manifold absolute pressure from a vacuum sensor output voltage. If the vacuum sensor output voltage falls out of the normal range, the vacuum senor or the circuit may be at fault. If this is the case, the ECM stores the DTCs.

Monitor strategy

Related DTCs	P0107: Manifold absolute pressure sensor range check (Low voltage) P0108: Manifold absolute pressure sensor range check (High voltage)
Required Sensors/Components (Main)	Vacuum sensor
Required Sensors/Components (Related)	-
Frequency of Operation	Continuous
Duration	2 seconds

MIL Operation	Immediately after
Sequence of Operation	None

TYPICAL ENABLING CONDITIONS

Overlap prohibited DTC	None

TYPICAL MALFUNCTION THRESHOLDS

P0107

Vacuum sensor voltage [intake manifold absolute pressure]	Less than 0.61 V (0.33 kPa {2.48 mmHg, 0.097 inHg, 0.048 psi})

P0108

Vacuum sensor voltage [intake manifold absolute pressure]	3.906 V (110.19 kPa {826.63 mmHg, 32.544 inHg, 15.977 psi}) or more

Operation range

Vacuum sensor voltage [intake manifold absolute pressure]	0.647 to 3.897 V (1.56 to 109.9 kPa {2 to 824 mmHg})

Circuit figure

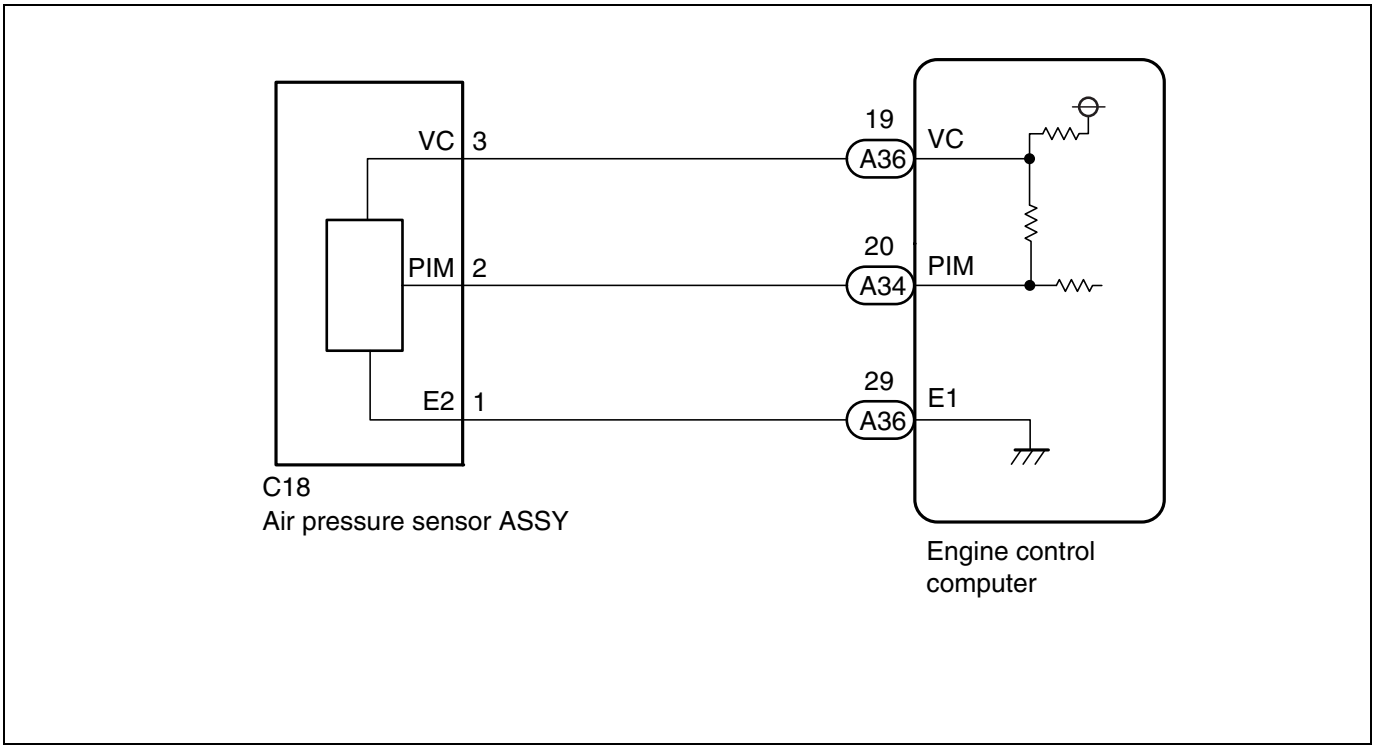

Description of functions

Test drive

Perform test drive to check if the DTC recurs.

1. Connect the SSM4 to the DLC3.
2. Turn the ignition switch to ON.
3. Turn on the SSM4.
4. Follow the SSM4 on-screen instructions to clear the DTCs. (Refer to ES - 28)
5. Turn the ignition switch to OFF, and wait for 30 seconds.
6. Turn the ignition switch to ON.
7. Turn on the SSM4.

8. Start the engine.
   NOTE:
   If the engine cannot be started, crank the engine for 10 seconds or more.
9. Idle the engine for 20 seconds or more.
10. Follow the SSM4 on-screen instructions to check the DTC. (Refer to ES - 28)

Inspection steps

NOTE:

Read the freeze frame data using the SSM4. A part of the engine running conditions under which the engine trouble occurred is recorded in the freeze frame data, which is useful for troubleshooting.

ES

1	Reading of SSM4 data

(1) Connect the SSM4 to the DLC3.
(2) Turn the ignition switch to ON with engine stopped.
(3) Turn on the SSM4.
(4) Select the following menu items using the SSM4. : [Each System] / [Engine Control System] / [Data monitor] / [Mani. Absolute Pressure]
(5) Read [Mani. Absolute Pressure].
Criteria: Indicates a value almost equal to the actual barometric pressure.

Manifold absolute pressure reference

Inspection conditions	[Mani. Absolute Pressure]
IG ON, engine stop	80 to 110 kPa

NOTE:

Normal barometric pressure is 101 kPa {758 mmHg}. As altitude increases 100 m {328 ft}, the atmospheric pressure decreases 1 kPa. This rate of change depends on the weather.

Result

Result	Go to
Malfunction	A
Normal	B

B → Inspection for problems that do not normally occur (Refer to ES - 28)

A

2	Check wiring harness and connector (air pressure sensor ASSY power supply voltage check)

NOTE:

For the inspection procedure and precautions for wiring harnesses and connectors, refer to IN - 36.

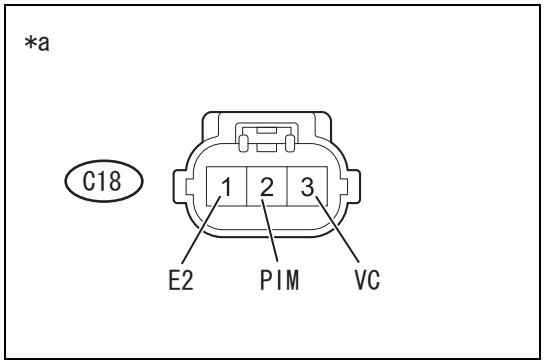

(1) Disconnect the connector for air pressure sensor ASSY.
(2) Measure the voltage between the terminals.

Voltage

Inspection terminals	Inspection conditions	Standard value
C18-3(VC)- C18-1(E2)	IG ON	4.5 to 5.5 V
C18-2 (PIM) - C18-1 (E2)	IG ON	4.0 to 5.0 V

Captions in illustration

*a	Front side of vehicle wiring harness connector (air pressure sensor ASSY connector)

NG → Go to Step 6.

OK

3	Replacement of air pressure sensor ASSY

(1) Replace the air pressure sensor ASSY. (Refer to ES - 704)

Next

4	Clear DTC

(1) Connect the SSM4 to the DLC3.
(2) Turn the ignition switch to ON.
(3) Turn on the SSM4.
(4) Follow the SSM4 on-screen instructions to clear the DTCs. (Refer to ES - 28)

Next

5	Perform test drive for operation check

(1) Perform test drive. (Refer to "Test drive" under "Description of functions")
(2) Connect the SSM4 to the DLC3.
(3) Turn the ignition switch to ON.
(4) Turn on the SSM4.
(5) Follow the SSM4 on-screen instructions to check the DTCs. (Refer to ES - 28)

Result

Result	Go to
P0107 or P0108 is output.	A
No DTC is output	B

B → Complete

A

Replacement of the engine control computer (Refer to ES - 670)

6	Check wiring harness and connector (air pressure sensor ASSY - engine control computer)

NOTE:
For the inspection procedure and precautions for wiring harnesses and connectors, refer to IN - 36.
(1) Disconnect the connector for air pressure sensor ASSY.
(2) Disconnect the connector for the engine control computer.
(3) Measure the resistance between the terminals. (For terminal arrangement, refer to ES - 36.)

ES

Resistance (open circuit check)

Inspection terminals	Inspection conditions	Standard value
A36-19 (VC) - C18-3 (VC)	Always	Less than 1 Ω
A34-20 (PIM) - C18-2 (PIM)	Always	Less than 1 Ω
A36-29 (E1) - C18-1 (E2)	Always	Less than 1 Ω

Resistance (short circuit check)

Inspection terminals	Inspection conditions	Standard value
A36-19 (VC) and C18-3 (VC) - other terminals and chassis ground	Always	10 k Ωor more
A34-20 (PIM) and C18-2 (PIM) - other terminals and chassis ground	Always	10 k Ωor more
A36-29 (E1) and C18-1 (E2) - other terminals and chassis ground	Always	10 k Ωor more

NG → Repair or replacement of wiring harness or connector

OK

Replacement of the engine control computer (Refer to ES - 670)

DTC	P0111	Intake temperature sensor characteristic

Circuit description
Inlet temperature sensor, which is built into the intake air flow meter SUB-ASSY, detects intake air temperature. The resistance of the thermistor built into the inlet air temperature sensor changes as the intake air temperature varies. The lower the intake air temperature, the greater the thermistor resistance, and the higher the intake air temperature, the lower the thermistor resistance. The inlet air temperature sensor is connected to the engine control computer. The 5-V power supply voltage is supplied from THA terminal of the computer, and grounded in the computer via the resistor integrated into the inlet air temperature sensor. Therefore, since the resistor and the inlet air temperature sensor are connected in series, the resistance changes as the inlet air temperature changes, and the potential at the THA terminal also changes. Based on this signal, the engine control computer increases the fuel injection amount to improve driveability when the engine is cold.
NOTE:
When either of these DTCs is stored, the engine control computer enters fail-safe mode. The engine control computer fixes the inlet air temperature at 20°C {68°F} during the fail-safe mode operation. The engine control computer continues fail-safe mode operation until the normal condition is restored.

DTC No.	DTC detection condition	Suspected parts
P0111	Difference between maximum and minimum values in inlet air temperature sensor voltage is less than 0.02 V. (2 trips detection logic)	Inlet air temperature sensor (integrated into intake air flow meter SUB-ASSY)

MONITOR DESCRIPTION

The ECM perform OBD II monitoring based on the intake are temperature sensor value. If the sensor value does not vary within the normal range, the ECM cannot perform OBD II monitoring or misdiagnoses the condition as sensor's internal failure. When the ECM finds no changes in the intake air temperature sensor value by performing the monitoring after the ignition is turned ON or the engine is started, this condition will be detected (after short or long period of time).

Monitor strategy

ES

Related DTCs	P0111: Intake air temperature sensor rationality check
Required Sensors/Components (Main)	Inlet air temperature sensor
Required Sensors/Components (Related)	-
Frequency of Operation	Once per driving cycle
Duration	Less than 1 second
MIL Operation	2 operation cycle
Sequence of Operation	None

TYPICAL ENABLING CONDITIONS

Overlap prohibited DTC	P0112, P0113 (Inlet air temperature sensor) P0117, P0118, P0125 (engine coolant temperature (ECT) sensor) P0122, P0123, P0222, P0223 (Throttle position sensor) P0500 (Vehicle Speed Sensor (VSS)) P0604, P0605 (ECM ROM), P0606 P1160 (throttle return spring) P2101, P2102 (Throttle actuator control motor) P2109 (Throttle position sensor minimum stop) P2119 (Throttle actuator control) P2122, P2123, P2127, P2128 (Accelerator Pedal Position Sensor (APPS) circuit) P2135 (Throttle position sensor (TPS) degree of correlation) P2138 (Accelerator pedal position sensor (APPS) degree of correlation)

Diagnosis 1	Battery Voltage	10.9V or more
	Soak time	21600 seconds or more
	Block heater judgment	Complete
	Block heater operation	Not operating

Block heater judgment Duration while rear oxygen sensor output voltage is less than 0.55 V	550 r/min or more
When conditions are met, the state is judged as "Block heater is not operating". Σ (engine coolant temp. - engine coolant temp. at engine startup) Time required for judgment: 1 sec. ×20 times (per second)	-10°C (-18°F) or more

Diagnosis 2	Battery Voltage	10.9V or more
	Engine coolant temperature	60°C (140°F) or more
	Accumulative value of mass air flow	5500 g (193.99 oz) or more
	Number of times that the following driving conditions have been met.	3 times or more
	• Duration time of driving condition A Vehicle speed Intake air amount • Duration time of driving condition B Vehicle speed	10 seconds or more 40 km/h (42.9 MPH) or more 10g/s (0.4oz/s) or more 15 seconds or more Less than 4 km/h (2.5 MPH)

ES

TYPICAL MALFUNCTION THRESHOLDS

Diagnosis 1	|Intake temp. in 30s after engine start-up - Engine coolant temp. at engine start-up|	More than 12°C (21.6°F) (varies depending on the ambient temperature)
	|intake air temp. in 30s after engine startup - ambient temp. in 30s after engine startup|	More than 20°C (68°F) (varies depending on the ambient temperature)
Diagnosis 2	When conditions are met, the state is judged as NG. Difference between the maximum and the minimum output voltage values	Less than 0.02 V (equivalent to approximately 0.5°C (0.9°F) near 25°C (77°F))

Circuit figure

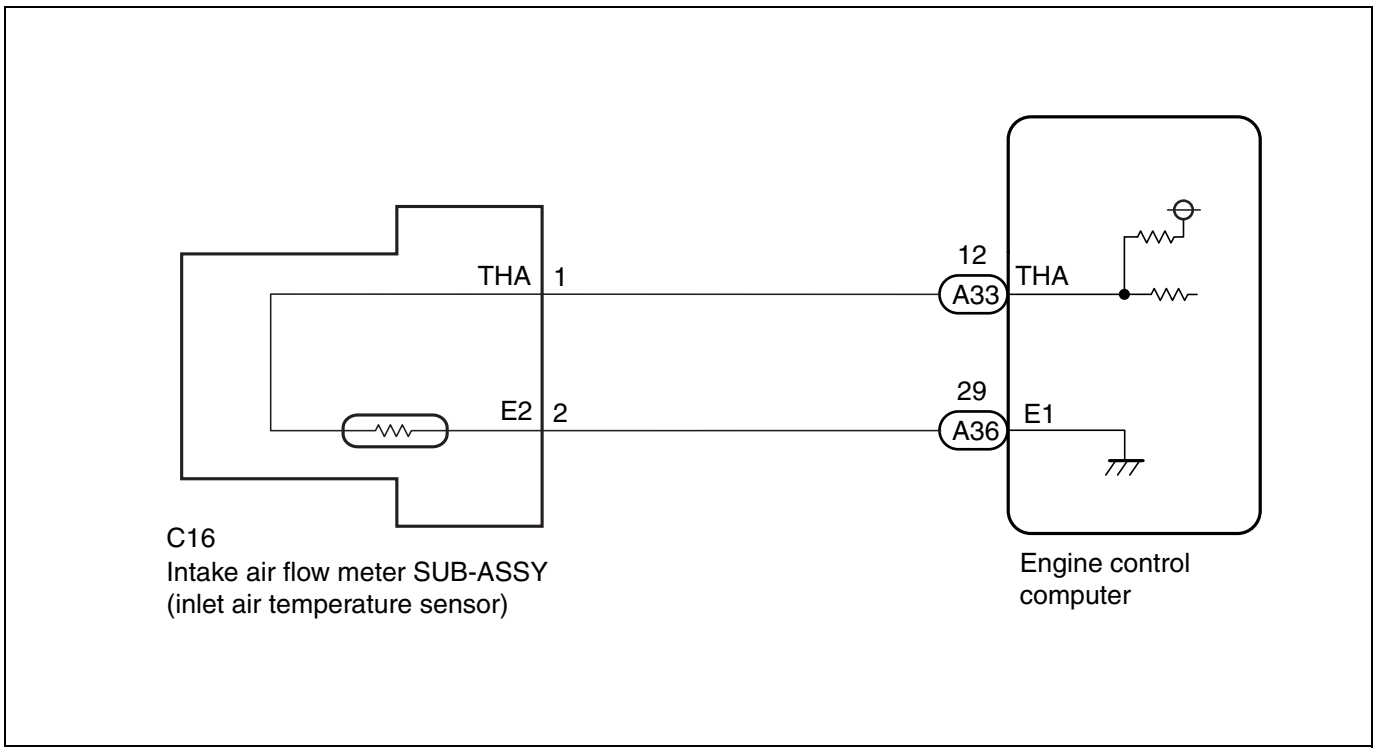

Description of functions

Test drive

Perform test drive to check if the DTC recurs.

NOTE:

- Make sure 6 hours or more pass after you turn the ignition switch to OFF when the vehicle is fully warmed up.
- If the vehicle is equipped with a block heater, make sure 6 hours or more pass without the block heater being activated.

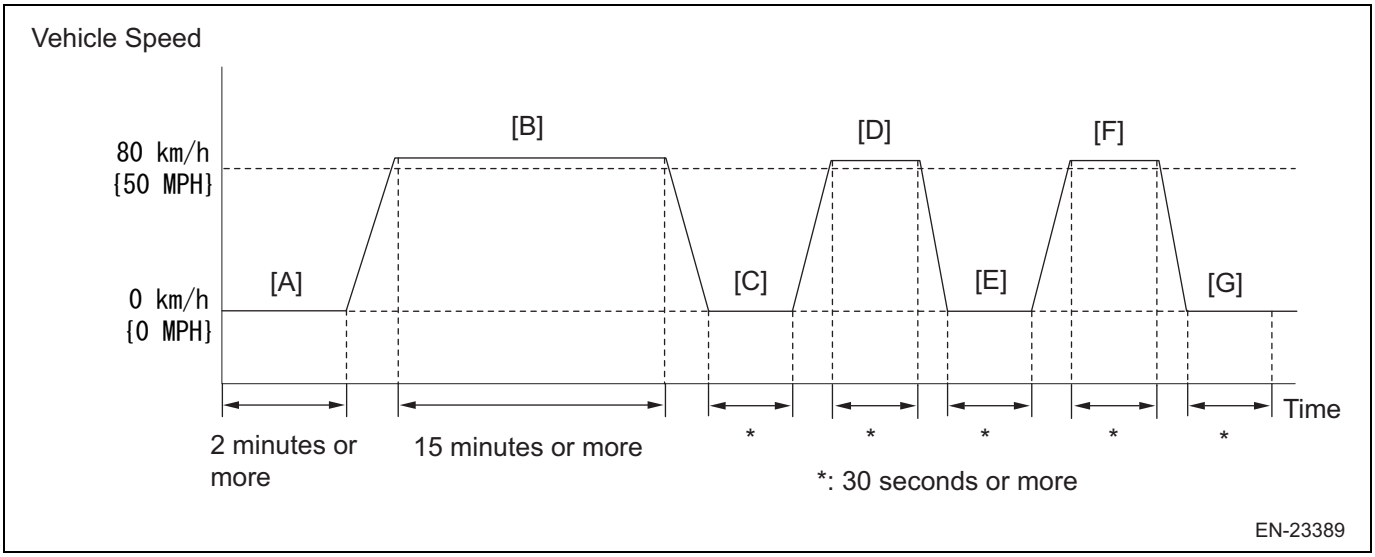

1. Connect the SSM4 to the DLC3.
2. Turn the ignition switch to ON.
3. Turn on the SSM4.
4. Follow the SSM4 on-screen instructions to clear the DTCs. (Refer to ES - 28)
5. Turn the ignition switch to OFF, and wait for 30 seconds.
6. Turn the ignition switch to ON.
7. Turn on the SSM4.
8. Select the following menu items using the SSM4. : [Each System] / [Engine Control System] / [Data monitor] / [Coolant Temp./ Intake Air Temp.]
9. Confirm that the engine coolant temperature and intake air temperature meet the condition described below.
   Condition: |Engine coolant temperature - intake air temperature| is 5°C {9°F} or less
   NOTE:
   If the condition is not met, turn the ignition switch to OFF, and wait until the condition is met.
10. If the condition is met, perform a driving test as follows.
    WARNING:
    When performing this driving test, always observe the applicable traffic laws such as the speed limit.
    NOTE:
    - In section B, you can decelerate to less than 80 km/h {49.7 MPH} or stop the vehicle according to the traffic conditions. Continue driving for a total of 15 minutes or more at 80 km/h {49.7 MPH} or more.
    - There is no time limit for the transition from idling to constant speed driving or from constant speed driving to idling.
    - If you maintain constant speed only when driving downhill, the engine load decreases, and you may not be able to obtain correct diagnostic results.
    - If you stop the engine during the driving test, restart the procedure from step 8.

    (a) Idle the engine for 2 minutes or more. (A)
    (b) Drive at 80 km/h {49.7 MPH} or more for a total of 15 minutes or more. (B)
    (c) Stop the vehicle and run the engine on idling for 30 seconds or more. (C)
    (d) Drive at a constant speed of 80 km/h {49.7 MPH} or more for 30 seconds or more. (D)
    (e) Stop the vehicle and run the engine on idling for 30 seconds or more. (E)
    (f) Drive at a constant speed of 80 km/h {49.7 MPH} or more for 30 seconds or more. (F)
    (g) Stop the vehicle and run the engine on idling for 30 seconds or more. (G)
11. Follow the SSM4 on-screen instructions to check the DTC. (Refer to ES - 28)

Inspection steps
NOTE:
Read the freeze frame data using the SSM4. A part of the engine running conditions under which the engine trouble occurred is recorded in the freeze frame data, which is useful for troubleshooting.

1	Read DTC

(1) Connect the SSM4 to the DLC3.
(2) Turn the ignition switch to ON.
(3) Turn on the SSM4.
(4) Follow the SSM4 on-screen instructions to check the DTC. (Refer to ES - 28)

Result

Result	Go to
P0111 and other DTCs are output	A
P0111 is output	B

NOTE:
If any DTCs other than P0111 are output, troubleshoot them first.

B → Replacement of intake air flow meter SUB-ASSY (refer to ES - 675)

A → To corresponding DTC chart (refer to ES - 12)

DTC	P0112	Intake Air Temperature Circuit Low Input

DTC	P0113	Intake Air Temperature Circuit High Input

Circuit description
Inlet temperature sensor, which is built into the intake air flow meter SUB-ASSY, detects intake air temperature. The resistance of the thermistor built into the inlet air temperature sensor changes as the intake air temperature varies. The lower the intake air temperature, the greater the thermistor resistance, and the higher the intake air temperature, the lower the thermistor resistance. The inlet air temperature sensor is connected to the engine control computer. The 5-V power supply voltage is supplied from THA terminal of the computer, and grounded in the computer via the resistor integrated into the inlet air temperature sensor. Therefore, since the resistor and the inlet air temperature sensor are connected in series, the resistance changes as the inlet air temperature changes, and the potential at the THA terminal also changes. Based on this signal, the engine control computer increases the fuel injection amount to improve driveability when the engine is cold.
NOTE:
When either of these DTCs is stored, the engine control computer enters fail-safe mode. The engine control computer fixes the inlet air temperature at 20°C {68°F} during the fail-safe mode operation. The engine control computer continues fail-safe mode operation until the normal condition is restored.

DTC No.	DTC detection condition	Suspected parts
P0112	The voltage for the inlet air temperature sensor is less than 0.400V for 0.5 seconds or more. (1 trips detection logic)	•Open or short condition in inlet air temperature sensor circuit •Inlet air temperature sensor (integrated into intake air flow meter SUB-ASSY) •ECM
P0113	The voltage for the inlet air temperature sensor is 4.707 V or more for 0.5 seconds or more. (1 trips detection logic)	

MONITOR DESCRIPTION
The ECM monitors the sensor voltage and use the value for calculating the intake air temperature. When the sensor output voltage falls out of the normal range, the ECM identifies this as an abnormal condition in the intake air temperature sensor circuit and stores DTC.

Monitor strategy

Related DTCs	P0112: Intake air temperature sensor range check (Low voltage) P0113: Intake air temperature sensor range check (High voltage)
Required Sensors/Components (Main)	Inlet air temperature sensor
Required Sensors/Components (Related)	-
Frequency of Operation	Continuous
Duration	0.5 seconds
MIL Operation	Immediately after
Sequence of Operation	None

ES

TYPICAL ENABLING CONDITIONS

Overlap prohibited DTC	None

TYPICAL MALFUNCTION THRESHOLDS

P0112

Inlet air temperature sensor voltage [Intake Air Temperature]	Less than 0.4 V (more than 132.8°C {271°F})

P0113

Inlet air temperature sensor voltage [Intake Air Temperature]	4.707 V or more (-46.9°C {-52°F} or less)

Operation range

Inlet air temperature sensor voltage [Intake Air Temperature]	0.435 to 4.698 V (-44.6 to 128.53°C {-48 to 263°F})

Circuit figure

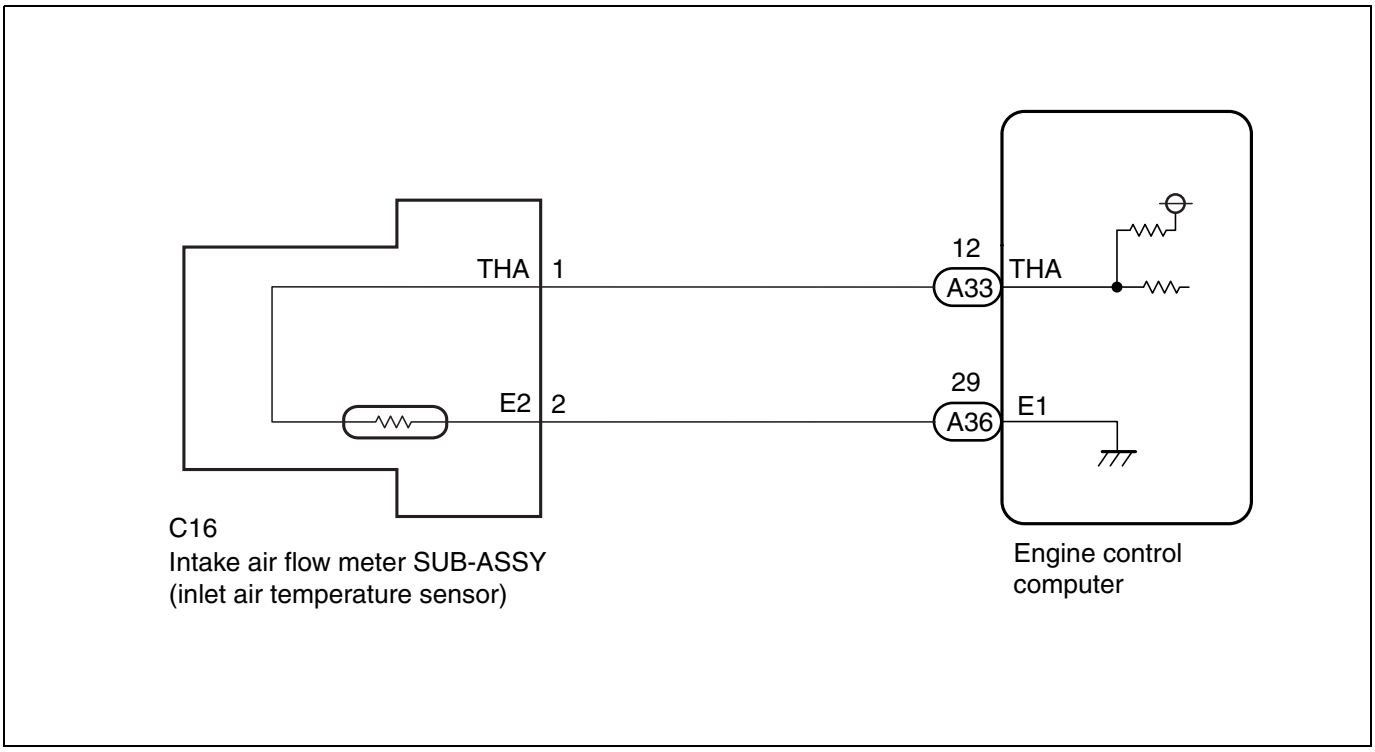

Description of functions

Test drive

Perform test drive to check if the DTC recurs.

1. Connect the SSM4 to the DLC3.
2. Turn the ignition switch to ON.
3. Turn on the SSM4.
4. Follow the SSM4 on-screen instructions to clear the DTCs. (Refer to ES - 28)
5. Turn the ignition switch to OFF, and wait for 30 seconds.
6. Turn the ignition switch to ON.
7. Turn on the SSM4.
8. Start the engine.
   NOTE:
   If the engine cannot be started, crank the engine for 10 seconds or more.
9. Idle the engine for 20 seconds or more.
10. Follow the SSM4 on-screen instructions to check the DTC. (Refer to ES - 28)

Inspection steps

NOTE:

Read the freeze frame data using the SSM4. A part of the engine running conditions under which the engine trouble occurred is recorded in the freeze frame data, which is useful for troubleshooting.

1	Reading of SSM4 data ([Intake Air Temp.])

(1) Connect the SSM4 to the DLC3.
(2) Turn the ignition switch to ON.
(3) Turn on the SSM4.
(4) Select the following menu items using the SSM4. : [Each System] / [Engine Control System] / [Data monitor] / [Intake Air Temp.]
(5) Read [Intake Air Temp.].

Result

Result	Go to
-40°C {-40°F}	A
120°C {248°F}	B
Equal to ambient temperature	C

NOTE:

- If the SSM4 display is -40°C {-40°F}, there is an open circuit.
- If the SSM4 display is 120°C {248°F}, there is a short circuit.

B → Go to Step 4.

C → Inspection for problems that do not normally occur (Refer to ES - 28)

A

2	Reading of SSM4 data (wiring harness open circuit check)

SST 09843-18040

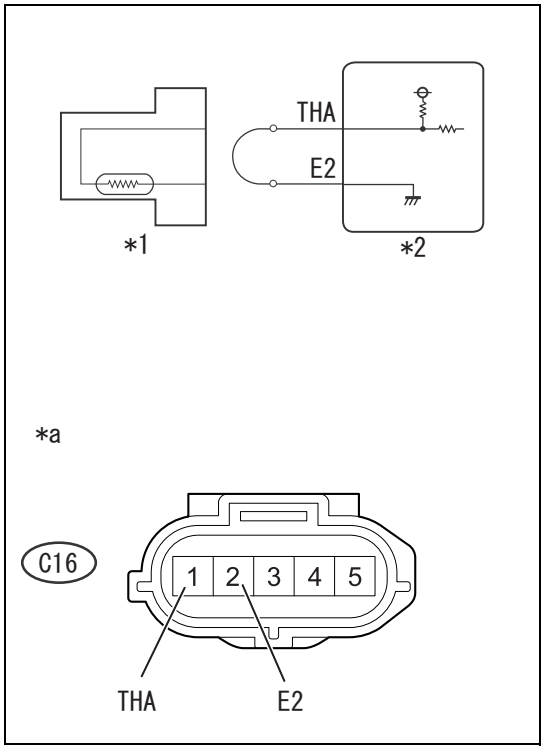

(1) Connect the SSM4 to the DLC3.
(2) Disconnect the connector of the intake air flow meter SUB-ASSY.
(3) Using SST (diagnostic check wire No. 2), short-circuit between terminals 1 and 2 of the intake air flow meter SUB-ASSY.
(4) Turn the ignition switch to ON.
(5) Select the following menu items using the SSM4. : [Each System] / [Engine Control System] / [Data monitor] / [Intake Air Temp.]
(6) Read [Data monitor].
Standard value: 120°C {248°F}

Captions in illustration

*1	Intake air flow meter SUB-ASSY
*2	Engine control computer
*a	Front side of vehicle wiring harness connector (intake air flow meter SUB-ASSY connector)

NG → Go to Step 3.

OK

Replacement of intake air flow meter SUB-ASSY (Refer to ES - 675)

3	Check wiring harness and connector (engine control computer - intake air flow meter SUB-ASSY)

NOTE:
For the inspection procedure and precautions for wiring harnesses and connectors, refer to IN - 36.
(1) Disconnect the connector for the engine control computer.
(2) Disconnect the connector of the intake air flow meter SUB-ASSY.
(3) Measure the resistance between the terminals. (For terminal arrangement, refer to ES - 36.)

Resistance (open circuit check)

Inspection terminals	Inspection conditions	Standard value
A33-12 (THA) - C16-1 (THA)	Always	Less than 1 Ω
A36-29(E1) - C16-2(E2)	Always	Less than 1 Ω

NG → Repair or replacement of wiring harness or connector

OK

Replacement of the engine control computer (Refer to ES - 670)

4	Reading of SSM4 data ([Wiring Harness Short Circuit Check])

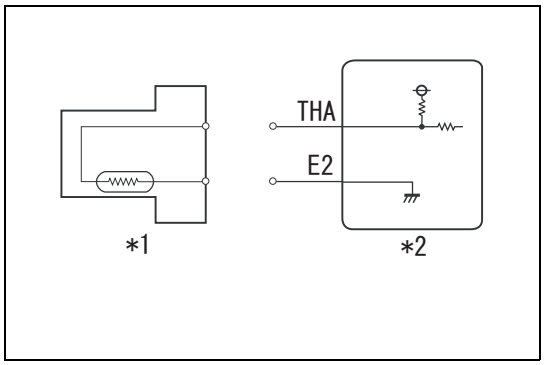

(1) Disconnect the connector of the intake air flow meter SUB-ASSY.
(2) Connect the SSM4 to the DLC3.
(3) Turn the ignition switch to ON.
(4) Select the following menu items using the SSM4. : [Each System] / [Engine Control System] / [Data monitor] / [Intake Air Temp.]
(5) Read [Data monitor].
Standard value: -40°C {-40°F}

Captions in illustration

*1	Intake air flow meter SUB-ASSY
*2	Engine control computer

NG → Go to Step 5.

OK →

Replacement of intake air flow meter SUB-ASSY (Refer to ES - 675)

5	Check wiring harness and connector (engine control computer - intake air flow meter SUB-ASSY)

NOTE:
For the inspection procedure and precautions for wiring harnesses and connectors, refer to IN - 36.
(1) Disconnect the connector for the engine control computer.
(2) Disconnect the connector of the intake air flow meter SUB-ASSY.
(3) Measure the resistance between the terminals. (For terminal arrangement, refer to ES - 36.)

Resistance (short circuit check)

Inspection terminals	Inspection conditions	Standard value
A33-12 (THA) and C16-1 (THA) - other terminals and chassis ground	Always	10 k Ωor more
A36-29 (E1) and C16-2 (E2) - other terminals and chassis ground	Always	10 k Ωor more

NG → Repair or replacement of wiring harness or connector

OK →

Replacement of the engine control computer (Refer to ES - 670)

DTC	P0116	Engine Coolant Temp. Sensor Circuit Range/Performance

Circuit description
The resistance of the thermistor built into the E.F.I. water temperature sensor changes as the engine coolant temperature changes. The E.F.I. water temperature sensor is connected to the engine control computer in the same way the inlet air temperature sensor is connected.
NOTE:
When either of these DTCs is stored, the engine control computer enters fail-safe mode. The engine control computer fixes the specified engine coolant temperature at 70°C {158°F} during the fail-safe mode operation. The engine control computer continues fail-safe mode operation until the normal condition is restored.

DTC No.	DTC detection condition	Suspected parts
P0116	The engine coolant does not cool down sufficiently in 6 hours after the ignition is turned off. (2 trips detection logic)	•Thermostat •E.F.I. water temperature sensor

MONITOR DESCRIPTION

If the E.F.I water temperature value does not change when a warmed-up engine is stopped and then cold-started again, it is judged that a malfunction is occurring. If this condition is detected consecutively in 2 drive cycles, the MIL illuminates and the DTC is stored.

Monitor strategy

Related DTCs	P0116: Engine coolant temperature sensor stuck rationality check
Required Sensors/Components (Main)	E.F.I. water temperature sensor
Required Sensors/Components (Related)	Inlet air temperature sensor
Frequency of Operation	Once per driving cycle
Duration	Less than 1 second
MIL Operation	2 operation cycle
Sequence of Operation	None

TYPICAL ENABLING CONDITIONS

Overlap prohibited DTC	P0112, P0113 (Inlet air temperature sensor) P0117, P0118 (engine coolant temperature (ECT) sensor)
Soak time	21600 seconds or more
Battery Voltage	10.9V or more
Block heater judgment	Complete
Block heater operation	Not operating

TYPICAL MALFUNCTION THRESHOLDS

|Engine coolant temp. at engine startup - Intake air temp. in 30s after engine startup|	More than value of Map
|Engine coolant temp. at engine start-up - Ambient temp. after engine start-up|	More than 25°C (45°F)

Map

Ambient temp. °C (°F)	-30 (-22)	30 (86)	45 (113)	60 (140)
|intake air temp. in 30s after engine startup - coolant temp. at engine startup|°C (°F)	12 (21.6)	12 (21.6)	22 (39.6)	22 (39.6)

Description of functions

Test drive

Perform test drive to check if the DTC recurs.

1. Connect the SSM4 to the DLC3.
2. Turn the ignition switch to ON.
3. Turn on the SSM4.
4. Follow the SSM4 on-screen instructions to clear the DTCs. (Refer to ES - 28)
5. Turn the ignition switch to OFF, and wait for 30 seconds.
6. Turn the ignition switch to ON.
7. Turn on the SSM4.

8. Select the following menu items using the SSM4. : [Each System] / [Engine Control System] / [Data monitor] / [Coolant Temp./ Intake Air Temp.]
9. Confirm that the engine coolant temperature and intake air temperature meet the condition described below.
   Condition: |Engine coolant temperature - intake air temperature| is 5°C {9°F} or less
   NOTE:
   If the condition is not met, turn the ignition switch to OFF, and wait until the condition is met.
10. If the condition is met, start the engine, and let it idle for 2 minutes or more.
    NOTE:
    Do not move the select lever from "P" or "N" range while the engine is idling.
11. Follow the SSM4 on-screen instructions to check the DTC. (Refer to ES - 28)

Inspection steps
NOTE:
Read the freeze frame data using the SSM4. A part of the engine running conditions under which the engine trouble occurred is recorded in the freeze frame data, which is useful for troubleshooting.

1	Read DTC

(1) Connect the SSM4 to the DLC3.
(2) Turn the ignition switch to ON.
(3) Turn on the SSM4.
(4) Follow the SSM4 on-screen instructions to check the DTC. (Refer to ES - 28)

Result

Result	Go to
P0116 is output	A
P0116 and other DTCs are output	B

NOTE:
If any DTCs other than P0116 are output, troubleshoot them first.

B → To corresponding DTC chart (refer to ES - 12)

A

2	Thermostat unit inspection

(1) Perform unit inspection of the thermostat. (Temperature at thermostat inlet) (refer to CO - 37)

NG → Thermostat replacement (Refer to CO - 37)

OK

Replacement of the E.F.I. water temperature sensor (Refer to ES - 695)

DTC	P0117	Engine Coolant Temperature Circuit Low Input

DTC	P0118	Engine Coolant Temperature Circuit High Input

Circuit description

The resistance of the thermistor built into the E.F.I. water temperature sensor changes as the engine coolant temperature changes. The E.F.I. water temperature sensor is connected to the engine control computer in the same way the inlet air temperature sensor is connected.

NOTE:

When either of these DTCs is stored, the engine control computer enters fail-safe mode. The engine control computer fixes the specified engine coolant temperature at 70°C {158°F} during the fail-safe mode operation. The engine control computer continues fail-safe mode operation until the normal condition is restored.

DTC No.	DTC detection condition	Suspected parts
P0117	E.F.I. water temperature sensor voltage is less than 0.349V for 0.5 seconds or longer. (1 trips detection logic)	•Short in E.F.I. water temperature sensor circuit •E.F.I. water temperature sensor •ECM
P0118	E.F.I. water temperature sensor voltage is 4.698 V or more for 0.5 seconds or longer. (1 trips detection logic)	•Open in E.F.I. water temperature sensor circuit •E.F.I. water temperature sensor •ECM

MONITOR DESCRIPTION

The E.F.I. water temperature sensor is used for monitoring a coolant temperature. The resistance of the thermistor integrated into the E.F.I. water temperature sensor changes as the engine coolant temperature changes. The lower the coolant temperature, the greater the thermistor resistance, and the higher the intake air temperature, the lower the thermistor resistance.

The resistance indicates the output voltage from the sensor. The ECM monitors the sensor voltage and use the value for calculating a engine coolant temperature. When the sensor output voltage falls out of the normal operation range, the ECM identifies this as an abnormal condition in the E.F.I. water temperature sensor and stores the DTC.

Monitor strategy

Related DTCs	P0117: Engine coolant temperature sensor range check (Low voltage) P0118: Engine coolant temperature sensor range check (High voltage)
Required Sensors/Components (Main)	E.F.I. water temperature sensor
Required Sensors/Components (Related)	-
Frequency of Operation	Continuous
Duration	0.5 seconds
MIL Operation	Immediately
Sequence of Operation	None

TYPICAL ENABLING CONDITIONS

Overlap prohibited DTC	None

TYPICAL MALFUNCTION THRESHOLDS

P0117

E.F.I. water temperature sensor voltage [Engine Coolant Temp.]	Less than 0.349 V [more than 137.3°C {253°F}]

P0118

E.F.I. water temperature sensor voltage [Engine Coolant Temp.]	4.698 V or more [-46.2°C {-51°F} or less]

Operation range

E.F.I. water temperature sensor voltage [Engine Coolant Temp.]	0.357 to 4.688 V [-43.85 to 136.12°C {-47 to 251°F}]

Circuit figure

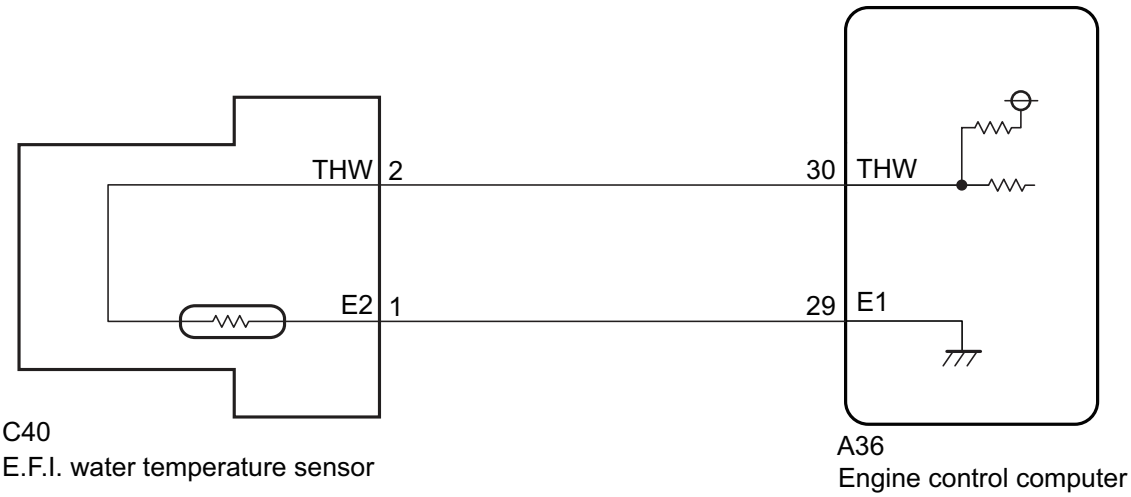

EN-21674

Description of functions

Test drive

Perform test drive to check if the DTC recurs.

1. Connect the SSM4 to the DLC3.
2. Turn the ignition switch to ON.
3. Turn on the SSM4.
4. Follow the SSM4 on-screen instructions to clear the DTCs. (Refer to ES - 28)
5. Turn the ignition switch to OFF, and wait for 30 seconds.
6. Turn the ignition switch to ON.
7. Turn on the SSM4.
8. Start the engine.
   NOTE:
   If the engine cannot be started, crank the engine for 10 seconds or more.
9. Idle the engine for 20 seconds or more.
10. Follow the SSM4 on-screen instructions to check the DTC. (Refer to ES - 28)

Inspection steps

NOTE:

Read the freeze frame data using the SSM4. A part of the engine running conditions under which the engine trouble occurred is recorded in the freeze frame data, which is useful for troubleshooting.

1	Reading of SSM4 data ([Coolant Temp.])

(1) Connect the SSM4 to the DLC3.
(2) Turn the ignition switch to ON.

(3) Select the following menu items using the SSM4. : [Each System] / [Engine Control System] / [Data monitor] / [Coolant Temp.]
(4) Read [Coolant Temp.] displayed on the SSM4 with engine stopped.

Result

Result	Go to
-40°C {-40°F} (open circuit)	A
120°C {248°F} (short circuit)	B
Equal to actual coolant temperature	C

ES

NOTE:
- If the SSM4 display is -40°C {-40°F}, there is an open circuit.
- If the SSM4 display is 120°C {248°F}, there is a short circuit.

B → Go to Step 4.

C → Inspection for problems that do not normally occur (Refer to ES - 28)

A

2	Reading of SSM4 data (wiring harness open circuit check)

SST 09843-18040

NOTE:
For the inspection procedure and precautions for wiring harnesses and connectors, refer to IN - 36.

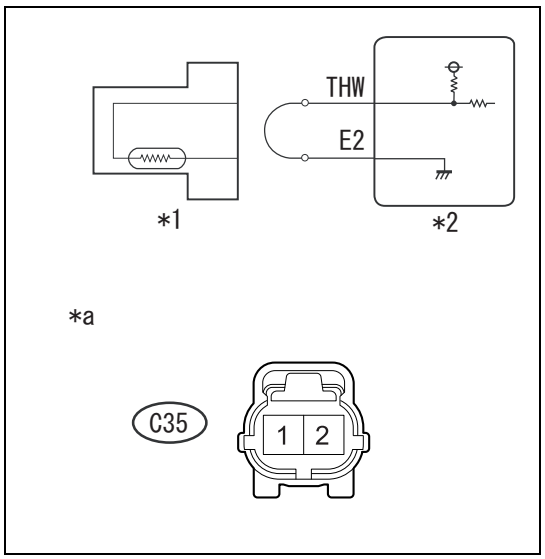

(1) Connect the SSM4 to the DLC3.
(2) Disconnect the E.F.I. water temperature sensor connectors.
(3) Using SST (diagnostic check wire No. 2), short-circuit between terminals 2 and 1 of the E.F.I. water temperature sensor.
(4) Turn the ignition switch to ON.
(5) Select the following menu items using the SSM4. : [Each System] / [Engine Control System] / [Data monitor] / [Coolant Temp.]
(6) Read the [Coolant Temp.] displayed on the SSM4.
Displayed temperature: 120°C {248°F}

Captions in illustration

*1	E.F.I. water temperature sensor
*2	Engine control computer
*a	Front side of vehicle wiring harness connector (E.F.I. water temperature sensor connector)

NG → Go to Step 3.

OK

Replacement of E.F.I. water temperature sensor (Refer to ES - 695)

3	Check wiring harness and connector (engine control computer - E.F.I. water temperature sensor)

NOTE:
For the inspection procedure and precautions for wiring harnesses and connectors, refer to IN - 36.

(1) Disconnect the E.F.I. water temperature sensor connectors.
(2) Disconnect the connector for the engine control computer.
(3) Measure the resistance between the terminals. (For terminal arrangement, refer to ES - 36.)

Resistance (open circuit check)

Inspection terminals	Inspection conditions	Standard value
A36-30 (THW) - C35-2 (THW)	Always	Less than 1 Ω
A36-29(E1) - C35-1(E2)	Always	Less than 1 Ω

NG → Repair or replacement of wiring harness or connector

OK

Replacement of the engine control computer (Refer to ES - 670)

4	Reading of SSM4 data (wiring harness short circuit check)

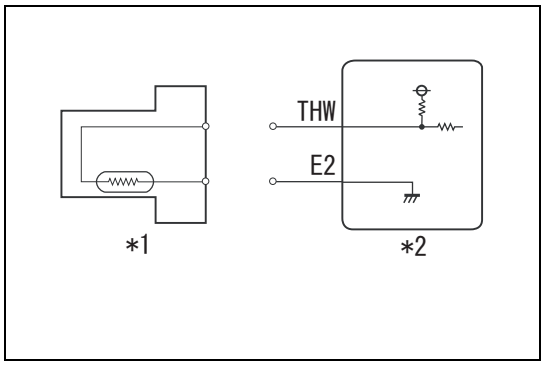

(1) Connect the SSM4 to the DLC3.
(2) Disconnect the E.F.I. water temperature sensor connectors.
(3) Turn the ignition switch to ON.
(4) Select the following menu items using the SSM4. : [Each System] / [Engine Control System] / [Data monitor] / [Coolant Temp.]
(5) Read the [Coolant Temp.] displayed on the SSM4.
Displayed temperature: -40°C {-40°F}

Captions in illustration

*1	E.F.I. water temperature sensor
*2	Engine control computer

NG → Go to Step 5.

OK

Replacement of E.F.I. water temperature sensor (Refer to ES - 695)

5	Check wiring harness and connector (E.F.I. water temperature sensor - engine control computer)

NOTE:
For the inspection procedure and precautions for wiring harnesses and connectors, refer to IN - 36.
(1) Disconnect the E.F.I. water temperature sensor connectors.
(2) Disconnect the connector for the engine control computer.
(3) Measure the resistance between the terminals. (For terminal arrangement, refer to ES - 36.)

Resistance (short circuit check)

Inspection terminals	Inspection conditions	Standard value
A36-30 (THW) and C35-2 (THW) - other terminals and chassis ground	Always	10 k Ωor more
A36-29 (E1) and C35-1 (E2) - other terminals and chassis ground	Always	10 k Ωor more

NG → Repair or replacement of wiring harness or connector

OK

Replacement of the engine control computer (Refer to ES - 670)

ES

DTC	P0122	Throttle/Pedal Position Sensor/Switch "A" Circuit Low Input
DTC	P0123	Throttle/Pedal Position Sensor/Switch "A" Circuit High Input
DTC	P0222	Sub-throttle sensor circuit Low
DTC	P0223	Throttle/Pedal Position Sensor/Switch "B" Circuit High Input
DTC	P2135	Throttle sensor characteristic

Circuit description

Throttle position sensor, built-into the throttle body ASSY (with motor), detects throttle valve opening angle. The sensor type used is a non-contact type throttle position sensor. This sensor uses Hall elements which is capable of sensing magnetic field as an electrical signal. As the throttle valve moves, output voltage difference is produced linearly, and this effect is called Hall effect. The throttle position sensor has circuits with 2 different output characteristics (THSM and THSS). The sensor also sends output voltage which corresponds to throttle opening angle to the engine control computer. The engine control computer, in turn, calculates a throttle valve opening angle based on the output voltage to perform operations such as controlling the throttle motor and compensating air/fuel ratio.

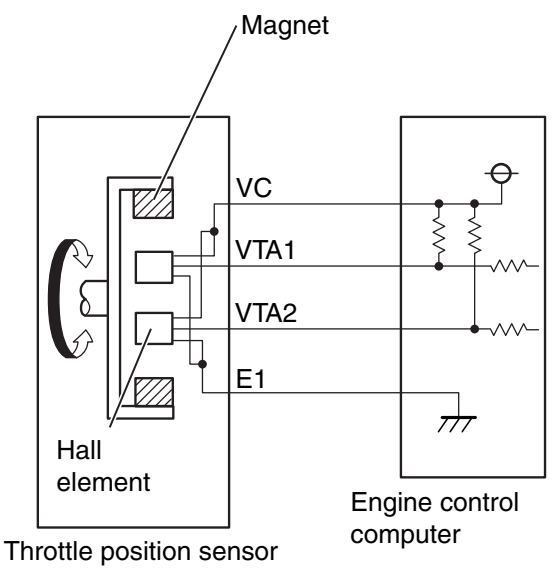

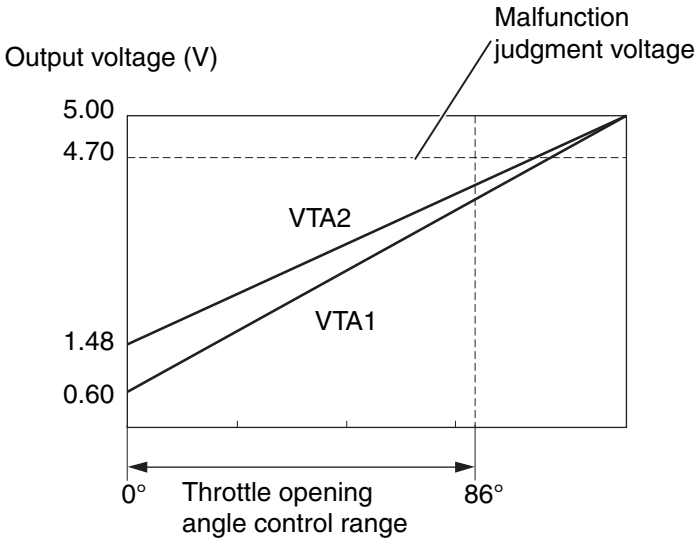

DTC No.	DTC detection condition	Suspected parts
P0122	VTA1 voltage is 0.273V or less for 0.024 seconds or longer. (1 trips detection logic)	•Throttle position sensor (throttle body) •Short circuit in VTA1 circuit •Open circuit in AVCC1 circuit •ECM

DTC No.	DTC detection condition	Suspected parts
P0123	VTA1 voltage is 4.736V or more for 0.024 seconds or longer. (1 trips detection logic)	•Throttle position sensor (throttle body) •Open circuit in VTA1 circuit •Open circuit in AVSS1 circuit •Short circuit between AVCC1 and VTA1 circuits •ECM
P0222	VTA2 voltage is 1.153V or less for 0.024 seconds or longer. (1 trips detection logic)	•Throttle position sensor (throttle body) •Short circuit in VTA2 circuit •Open circuit in AVCC1 circuit •ECM
P0223	VTA2 voltage is 4.772 V or more for 0.024 seconds or longer. (1 trips detection logic)	•Throttle position sensor (throttle body) •Open circuit in VTA2 circuit •Open circuit in AVSS1 circuit •Short circuit between VC and VTA2 circuits •ECM
P2135	Voltage deviation between VTA1 and VTA2 exceeds the threshold of 0.212 seconds. (1 trips detection logic)	•Short circuit between VTA1 and VTA2 circuits •Throttle position sensor (throttle body) •ECM

ES

MONITOR DESCRIPTION

The ECM uses the throttle position sensor to monitor throttle valve opening angle. Some checks are performed so that the ECM may confirm that the throttle position sensor is properly functioning.

- There is a specified amount of difference between sensor output voltages VTA1 and VTA2, which are used to detect a throttle valve opening angle. If the difference between VTA1 and VTA2 is improper, the ECM identifies this as an abnormal condition in the sensor circuit and stores the DTC.
- VTA1 and VTA2 have each specified voltage range. If output voltages of VTA1 and VTA2 fall out of the normal operation range, the ECM identifies this as an abnormal condition in the sensor circuit and stores the DTC.
- Also, voltage levels of VTA1 and VTA2 should not be close to each other. If the voltage of VTA1 comes close to the voltage of VTA2 and their difference is within 0.02 V or less, the ECM judges that there is a short condition in the sensor circuit and stores the DTC.

Monitor strategy

Related DTCs	P0122: Throttle position sensor circuit continuity (Low Voltage)(Sensor 1) P0123: Throttle position sensor circuit continuity (High Voltage)(Sensor 1) P0222: Throttle position sensor circuit continuity (Low Voltage)(Sensor 2) P0223: Throttle position sensor circuit continuity (High Voltage)(Sensor 2) P2135: Throttle position sensor rationality check
Required Sensors/Components (Main)	Throttle position sensor
Required Sensors/Components (Related)	-
Frequency of Operation	Continuous
Duration	0.024 seconds: P0122, P0123, P0222, P0223 0.212 seconds: P2135
MIL Operation	Immediately after
Sequence of Operation	None

TYPICAL ENABLING CONDITIONS

Overlap prohibited DTC	None
Battery Voltage	6V or more

TYPICAL MALFUNCTION THRESHOLDS

P0122

VTA1 voltage (throttle opening angle)	0.273 V (5.46 %) or less

P0123

VTA1 voltage (throttle opening angle)	4.736V (94.72%) or more

P0222

VTA2 voltage (throttle opening angle)	1.153 V (23.06 %) or less

P0223

VTA2 voltage (throttle opening angle)	4.772 V (95.44%) or more

P2135

VTA1 - VTA2	3.79 % or more (changing according to VTA1 - refer to "Map1")

Map1

VTA1 throttle opening angle	|VTA1 throttle opening angle - VTA2 throttle opening angle|
VTA1 throttle opening angle 0 % or more and less than 1.7 %	3.79%
VTA1 throttle opening angle 1.7 % or more and less than 3.4 %	4.59%
VTA1 throttle opening angle 3.4 % or more and less than 7.2 %	6.29%
VTA1 throttle opening angle 7.2 % or more and less than 25.3 %	7.99%
VTA1 throttle opening angle 25.3 % or more and 100% or less	9.59%

Operation range

VTA1 voltage (throttle opening angle)	0.382 to 4.504 V (7.64 to 90.09 %)
VTA2 voltage (throttle opening angle)	1.262 to 4.696V (25.24 to 93.92%)

Circuit figure

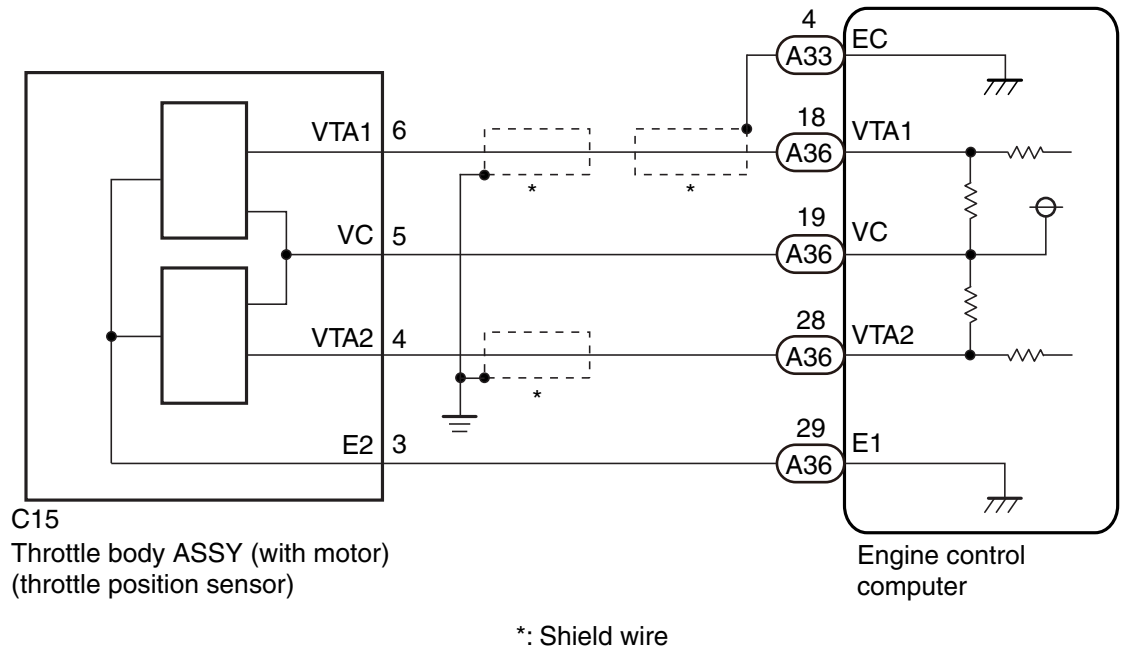

Description of functions

Test drive

Perform test drive to check if the DTC recurs.

1. Connect the SSM4 to the DLC3.
2. Turn the ignition switch to ON.
3. Turn on the SSM4.
4. Follow the SSM4 on-screen instructions to clear the DTCs. (Refer to ES - 28)
5. Turn the ignition switch to OFF, and wait for 30 seconds.
6. Turn the ignition switch to ON.
7. Turn on the SSM4.
8. Start the engine.
   NOTE:
   If the engine cannot be started, crank the engine for 10 seconds or more.
9. Idle the engine for 20 seconds or more.
10. Follow the SSM4 on-screen instructions to check the DTC. (Refer to ES - 28)

Inspection steps

NOTE:

Read the freeze frame data using the SSM4. A part of the engine running conditions under which the engine trouble occurred is recorded in the freeze frame data, which is useful for troubleshooting.

1	Reading of SSM4 data (throttle sensor No. 1 voltage, throttle sensor No. 2 voltage)

(1) Connect the SSM4 to the DLC3.
(2) Turn the ignition switch to ON.
(3) Turn on the SSM4.
(4) Select the following menu items using the SSM4. : [Each System] / [Engine Control System] / [Data monitor] / [Throttle sensor No1 Voltage], [Throttle sensor No2 Voltage]
(5) Read [Data monitor].

Result

When accelerator pedal is fully closed.		When accelerator pedal is fully open.		Trouble area	Go to
Throttle sensor No. 1 voltage (VTA1)	Throttle sensor No. 2 voltage (VTA2)	Throttle sensor No. 1 voltage (VTA1)	Throttle sensor No. 2 voltage (VTA2)		
0 to 0.273 V	0 to 1.153 V	0 to 0.273 V	0 to 1.153 V	Open circuit in VC circuit	A
4.736 to 5.0 V	4.772 to 5.0 V	4.736 to 5.0 V	4.772 to 5.0 V	Open circuit in E1 circuit	A
0 to 0.273 V or 4.736 to 5.0 V	1.153 to 4.772 V	0 to 0.273 V or 4.736 to 5.0 V	1.153 to 4.772 V	Open or short circuit in VTA1 circuit	A
0.273 to 4.736 V	0 to 1.153 V or 4.772 to 5.0 V	0.273 to 4.736 V	0 to 1.153 V or 4.772 to 5.0 V	Open or short circuit in VTA2 circuit	A
0.273 to 4.736 V	1.153 to 4.772 V	0.273 to 4.736 V	1.153 to 4.772 V	System normal	B

B → Go to Step 5.

A

2	Check wiring harness and connector (engine control computer - throttle body ASSY (with motor))

NOTE:
For the inspection procedure and precautions for wiring harnesses and connectors, refer to IN - 36.

(1) Disconnect the connector for the engine control computer.
(2) Disconnect the throttle body ASSY (with motor) connector.
(3) Measure the resistance between the terminals. (For terminal arrangement, refer to ES - 36.)

Resistance (open circuit check)

Inspection terminals	Inspection conditions	Standard value
A36-19(VC) - C15-5(VC)	Always	Less than 1 Ω
A36-18 (VTA1) - C15-6 (VTA1)	Always	Less than 1 Ω
A36-28 (VTA2) - C15-4 (VTA2)	Always	Less than 1 Ω
A36-29(E1) - C15-3(E2)	Always	Less than 1 Ω

Resistance (short circuit check)

Inspection terminals	Inspection conditions	Standard value
A36-19 (VC) and C15-5 (VC) - other terminals and chassis ground	Always	10 k Ωor more
A36-18 (VTA1) and C15-6 (VTA1) - other terminals and chassis ground	Always	10 k Ωor more
A36-28 (VTA2) and C15-4 (VTA2) - other terminals and chassis ground	Always	10 k Ωor more
A36-29 (E1) and C15-3 (E2) - other terminals and chassis ground	Always	10 k Ωor more

NG → Repair or replacement of wiring harness or connector

OK

3	Check wiring harness and connector (power supply voltage)

NOTE:
For the inspection procedure and precautions for wiring harnesses and connectors, refer to IN - 36.

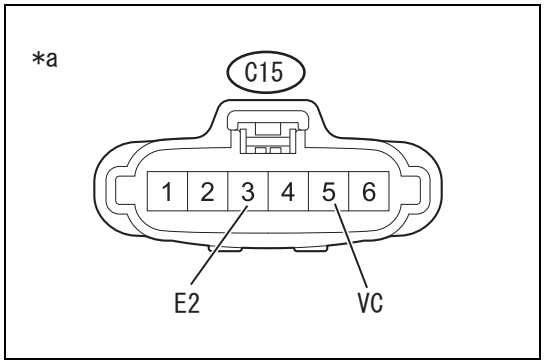

(1) Disconnect the throttle body ASSY (with motor) connector.
(2) Measure the voltage between the terminals.

Voltage

Inspection terminals	Inspection conditions	Standard value
C15-5 (VC) - C15-3 (E2)	IG ON	4.5 to 5.5 V

Captions in illustration

*a	Front side of vehicle wiring harness connector (throttle body ASSY (with motor) connector)

NG → Replacement of the engine control computer (Refer to ES - 670)

OK

4	Replacement of throttle body ASSY (with motor)

(1) Replace the throttle body ASSY (with motor). (Refer to ES - 666)

Next

5	Clear DTC

(1) Connect the SSM4 to the DLC3.
(2) Turn the ignition switch to ON.
(3) Turn on the SSM4.
(4) Follow the SSM4 on-screen instructions to clear the DTCs. (Refer to ES - 28)
(5) Turn the ignition switch to OFF, and wait for 30 seconds.

Next

6	Perform test drive for operation check

(1) Perform test drive. (Refer to "Test drive" under "Description of functions")
WARNING:
When performing this driving test, always observe the applicable traffic laws such as the speed limit.
(2) Follow the SSM4 on-screen instructions to check the DTC. (Refer to ES - 28)

Result

Result	Go to
No DTC is output	A
Throttle system DTCs are output.	B

B → Replacement of the engine control computer (Refer to ES - 670)

A

Complete

ES

DTC	P0125	Insufficient Coolant Temperature for Closed Loop Fuel Control

Circuit description
For a circuit description, refer to ES - 98.

DTC No.	DTC detection condition	Suspected parts
P0125	Coolant temperature does not reach to 15°C below the temperature required for closed loop air/fuel ratio control within the specified time (120s) or 300s.	•Cooling system •E.F.I. water temperature sensor •Thermostat

MONITOR DESCRIPTION
The diagnostics system monitors the E.F.I. water temperature sensor functional checks. After the engine is started, if the engine coolant temperature does not reach to the range required for the closed loop air/fuel ratio control within the specified time period, the diagnostics system judges that there is a malfunction in the E.F.I. water temperature sensor and stores the DTC.

Monitor strategy

Related DTCs	P0125: Engine coolant temperature sensor range check
Required Sensors/Components (Main)	E.F.I. water temperature sensor, thermostat, cooling system
Required Sensors/Components (Related)	-
Frequency of Operation	Once per driving cycle
Duration	Less than 1 second
MIL Operation	2 operation cycle
Sequence of Operation	None

TYPICAL ENABLING CONDITIONS

Overlap prohibited DTC	P0117, P0118 (engine coolant temperature (ECT) sensor) P0122, P0123, P0222, P0223 (Throttle position sensor) P0300, P0301, P0302, P0303, P0304 (misfire) P0500 (Vehicle Speed Sensor (VSS)) P0604, P0605 (ECM ROM) P1160 (throttle return spring) P2101, P2102 (Throttle actuator control motor) P2109 (Throttle position sensor minimum stop) P2119 (Throttle actuator control) P2122, P2123, P2127, P2128 (Accelerator Pedal Position Sensor (APPS) circuit) P2135 (Throttle position sensor (TPS) degree of correlation) P2138 (Accelerator pedal position sensor (APPS) degree of correlation)
Battery Voltage	10.9V or more
Engine Speed	500 RPM or more
Engine coolant temperature at startup	Less than -15°C {5°F}

TYPICAL MALFUNCTION THRESHOLDS

Engine coolant temperature	Less than -15°C {5°F}
Perform the following condition A or B	
A:	
Elapsed time after starting the engine	120 seconds or more
Minimum value (engine coolant temperature or intake air temperature at engine startup)	-23.3°C (-9.9°F) or more
B:	
Elapsed time after starting the engine	300 seconds or more
Minimum value (engine coolant temperature or intake air temperature at engine startup)	Less than -23.3°C (-9.9°F)

Circuit figure

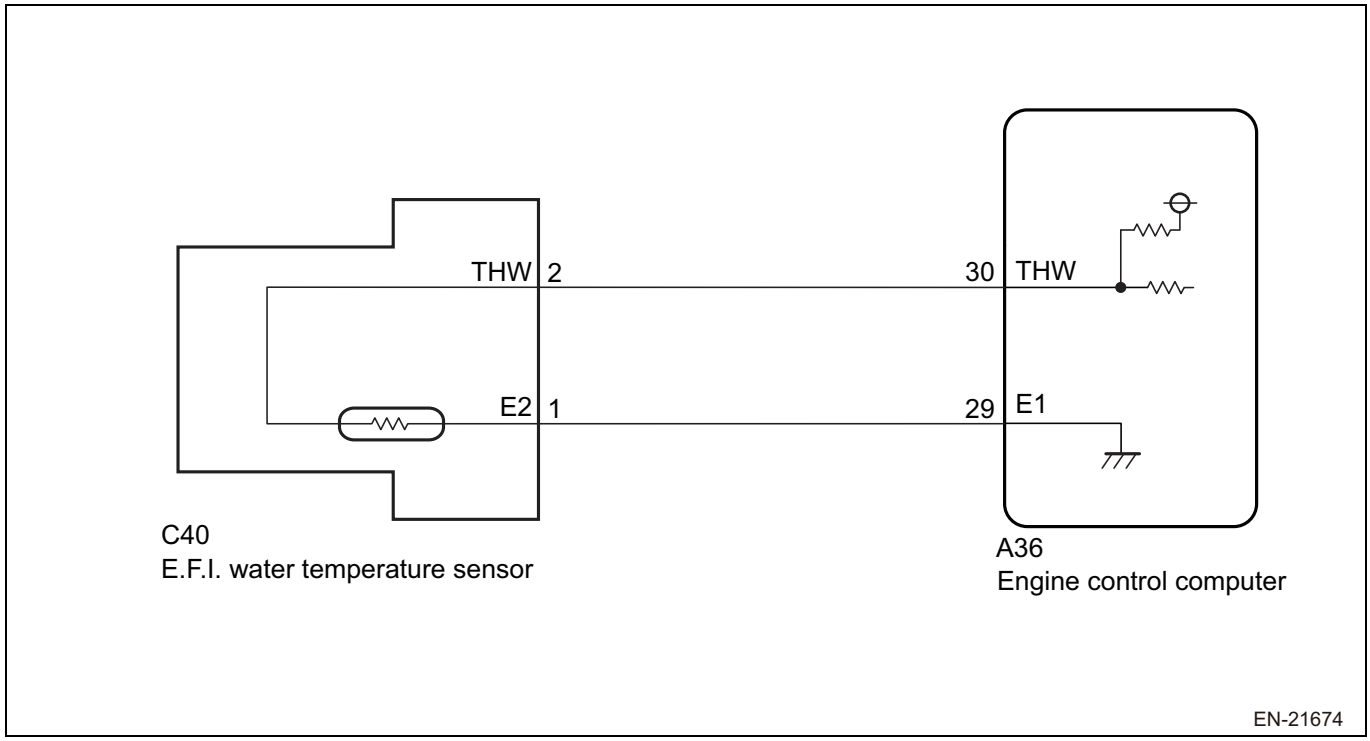

Description of functions

Test drive

Perform test drive to check if the DTC recurs.

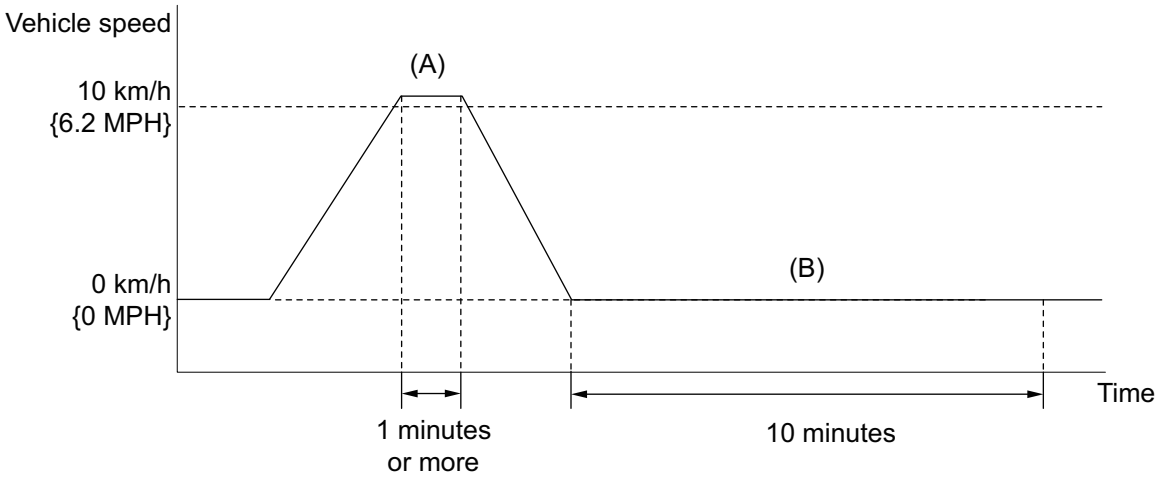

1. Connect the SSM4 to the DLC3.
2. Turn the ignition switch to ON.
3. Turn on the SSM4.
4. Follow the SSM4 on-screen instructions to clear the DTCs. (Refer to ES - 28)
5. Turn the ignition switch to OFF, and wait for 30 seconds.
6. Turn the ignition switch to ON.
7. Turn on the SSM4.
8. Start the engine.
9. Perform driving test as follows.
   WARNING:
   When performing this driving test, always observe the applicable traffic laws such as the speed limit.
   (a) Drive at 10 km/h {6.2 MPH} or more for 1 minute or more. (A)
   (b) Stop the vehicle.
   (c) Idle the engine for 10 minutes or more. (B)
10. Follow the SSM4 on-screen instructions to check the DTC. (Refer to ES - 28)

Inspection steps

NOTE:

Read the freeze frame data using the SSM4. A part of the engine running conditions under which the engine trouble occurred is recorded in the freeze frame data, which is useful for troubleshooting.

1	Read DTC

(1) Connect the SSM4 to the DLC3.
(2) Turn the ignition switch to ON.
(3) Turn on the SSM4.
(4) Perform test drive. (Refer to "Test drive" under "Description of functions")
   WARNING:
   When performing this driving test, always observe the applicable traffic laws such as the speed limit.
(5) Follow the SSM4 on-screen instructions to check the DTC. (Refer to ES - 28)

Result

Result	Go to
P0125 is output	A
DTCs other than P0125 are output	B

NOTE:
If any DTCs other than P0125 are output, troubleshoot them first.

B → To corresponding DTC chart (refer to ES - 12)

A

2	Thermostat unit inspection

(1) Perform unit inspection of the thermostat. (Refer to CO - 37)

NG → Thermostat replacement (Refer to CO - 37)

OK

3	Cooling system check

(1) Check the cooling system for a malfunction that causes excessive cooling of the system including radiator fan operation fault and other problems.

NG → Repair or replacement of cooling system

OK

Replacement of the E.F.I. water temperature sensor (Refer to ES - 695)

DTC	P0128	Thermostat (characteristic)

Circuit description
When the E.F.I. water temperature sensor detects the coolant temperature, at the same time the ECM estimates the engine coolant temperature. If the difference between the estimated coolant temperature and the actual engine coolant temperature exceeds the predetermined setup value, the DTC is stored and thermostat functional fault is reported.

DTC No.	DTC detection condition	Suspected parts
P0128	A fault in thermostat function is detected. (2 trips detection logic)	•Thermostat •Cooling system •E.F.I. water temperature sensor •ECM

MONITOR DESCRIPTION
The ECM estimates a engine coolant temperature based on the temperature at startup, engine load, and engine speed.
Then, the estimated temperature is compared to the actual engine coolant temperature at the ECM. When the difference between the estimated temperature and the actual engine coolant temperature exceeds a specified value, the ECM identifies this as a malfunction of the thermostat (water inlet) or the cooling system and stores the DTC.

Monitor strategy

Related DTCs	P0128:Thermostat functional check
Required Sensors/Components (Main)	Thermostat E.F.I. water temperature sensor
Required Sensors/Components (Related)	Intake air temperature sensor Vehicle speed sensor
Frequency of Operation	Once per driving cycle

Duration	Less than 1 second
MIL Operation	2 operation cycle
Sequence of Operation	None

TYPICAL ENABLING CONDITIONS

All

Overlap prohibited DTC	P0101, P0102, P0103 (intake air flow (MAF) meter) P0111, P0112, P0113 (Intake Air Temperature (IAT) sensor) P0117, P0118, P0125 (Engine Coolant Temperature (ECT) sensor) P0122, P0123, P0222, P0223 (Throttle position sensor) P0300, P0301, P0302, P0303, P0304 (misfire) P0335, P0336 (crankshaft position sensor) P0340, P0345 (camshaft position sensor - intake with variable valve timing (VVT)) P0500 (Vehicle Speed Sensor (VSS)) P0604, P0605 (ECM ROM) P1160 (throttle return spring) P2101, P2102 (Throttle actuator control motor) P2109 (Throttle position sensor minimum stop) P2119 (Throttle actuator control) P2122, P2123, P2127, P2128 (Accelerator Pedal Position Sensor (APPS) circuit) P2135 (Throttle position sensor (TPS) degree of correlation) P2138 (Accelerator pedal position sensor (APPS) degree of correlation)
Battery Voltage	10.9V or more
Ambient temperature	-7°C {19°F} or more
Vehicle speed	30km/h {18.6 MPH} or more
Engine coolant temperature at startup	Less than 60°C (140°F)

Case 1

Standard engine coolant temperature	More than 60°C {140°F}

Case 2

Standard engine coolant temperature	More than 70.2°C {158.4°F} (varies depending on an ambient temperature when engine is started)

Case 3

Standard engine coolant temperature	47.1°C {116.8°F} or more (varies depending on an engine coolant temperature when engine is started)

TYPICAL MALFUNCTION THRESHOLDS

Case 1

Actual engine coolant temperature	Less than 60°C (140°F)
Σ (standard engine coolant temperature - actual engine coolant temperature)	More than 1200°C {2160°F} (varies depending on an engine coolant temperature when engine is started)

Case 2

Actual engine coolant temperature	Less than 77.8°C {172°F} (varies depending on an ambient temperature when engine is started)
Σ (standard engine coolant temperature - actual engine coolant temperature)	More than 1500°C {2700°F} (varies depending on an engine coolant temperature when engine is started)

Case 3

Standard engine coolant temperature - actual engine coolant temperature	More than 11.1°C {20°F}

Σ (standard engine coolant temperature - actual engine coolant temperature)	More than 1731.6°C {3116.9°F} (varies depending on an engine coolant temperature when engine is started)

Description of functions

Test drive

Perform test drive to check if the DTC recurs.

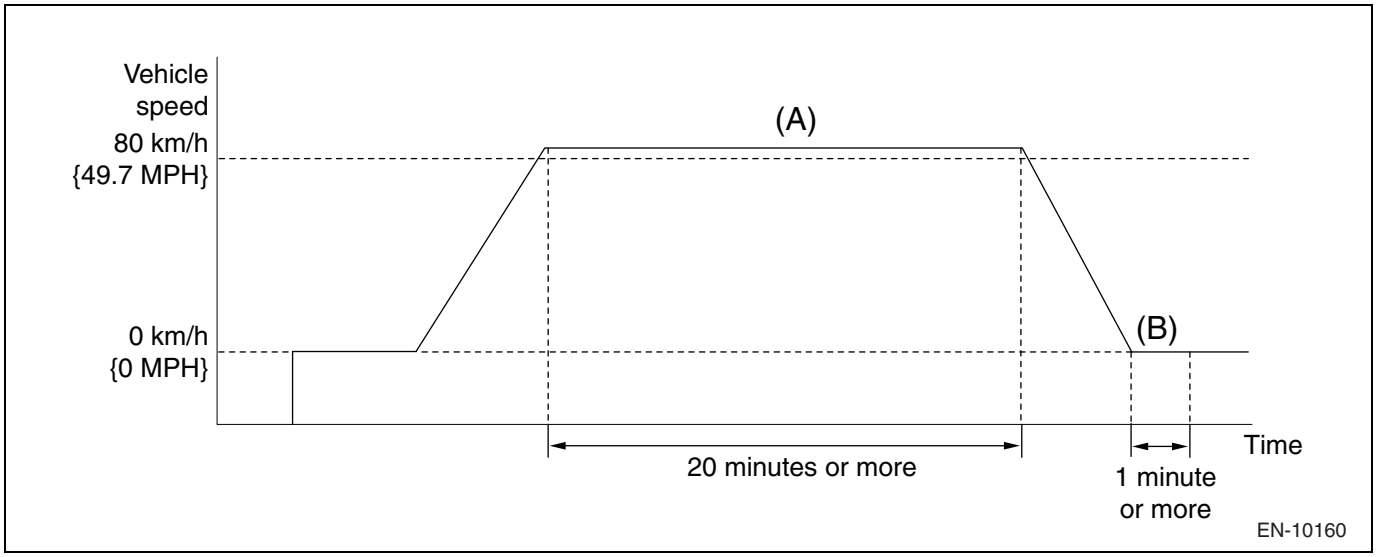

1. Connect the SSM4 to the DLC3.
2. Turn the ignition switch to ON.
3. Turn on the SSM4.
4. Follow the SSM4 on-screen instructions to clear the DTCs. (Refer to ES - 28)
5. Turn the ignition switch to OFF, and wait for 30 seconds.
6. Turn the ignition switch to ON.
7. Turn on the SSM4.
8. Start the engine and let it warm up until the engine coolant temperature stabilizes. (at 75°C {167°F} or more).
9. Perform driving test as follows.
   WARNING:
   When performing this driving test, always observe the applicable traffic laws such as the speed limit.
   (a) Drive at 80 km/h {49.7 MPH} or more for 20 minutes or more. (A)
   (b) Stop the vehicle.
   (c) Idle the engine for 1 minute or more. (B)
10. Follow the SSM4 on-screen instructions to check the DTC. (Refer to ES - 28)

Inspection steps

NOTE:

Read the freeze frame data using the SSM4. A part of the engine running conditions under which the engine trouble occurred is recorded in the freeze frame data, which is useful for troubleshooting.

1	Read DTC

(1) Connect the SSM4 to the DLC3.
(2) Turn the ignition switch to ON.
(3) Turn on the SSM4.
(4) Perform test drive. (Refer to "Test drive" under "Description of functions")
   WARNING:
   When performing this driving test, always observe the applicable traffic laws such as the speed limit.

(5) Follow the SSM4 on-screen instructions to check the DTC. (Refer to ES - 28)

Result

Result	Go to
P0128 is output.	A
DTCs other than P0128 are also output	B

NOTE:
If any DTCs other than P0128 are output, troubleshoot them first.

ES

B → To corresponding DTC chart (refer to ES - 12)

A

2 Cooling system check

(1) Check the cooling system for a malfunction that causes excessive cooling of the system including radiator fan operation fault and other problems.

NG → Repair or replacement of cooling system

OK

3 Radiator fan inspection

(1) Start the engine.
(2) Idle the engine approximately 3 minutes (with accelerator pedal OFF), and check operation of the radiator fan during that time.

Result

Result	Go to
Stops within 3 minutes	A
Operates for 3 minutes or more continuously	B

B → Repair the radiator fan circuit. (Refer to CO - 7)

A

4 Inspection of engine coolant temperature sensor

(1) Check the water temperature sensor. (Refer to ES - 696)

NG → Replacement of E.F.I. water temperature sensor (refer to ES - 695)

OK

5 Thermostat unit inspection

(1) Perform unit inspection of the thermostat. (Temperature at thermostat inlet) (refer to CO - 37)

NG → Thermostat replacement (Refer to CO - 37)

OK

Replacement of the engine control computer (Refer to ES - 670)

DTC	P0131	Oxygen Sensor Circuit Low Voltage (Bank 1 Sensor 1)
DTC	P0132	Oxygen Sensor Circuit High Voltage (Bank 1 Sensor 1)
DTC	P0134	Oxygen Sensor Circuit No Activity Detected (Bank 1 Sensor 1)

Circuit description

For a circuit description, refer to ES - 131.

DTC No.	DTC detection condition	Suspected parts
P0131	When either one of following two conditions applied for 1 second or longer (1 trip detection logic): •A1A+voltage is less than 0.4 V. •A1A-voltage is less than 0.4 V. •Difference between A1A+voltage and A1A-voltage is less than 0.1 V, and A1A-voltage is 3.8 V to 4.7 V.	•Open/short circuits in the air/fuel ratio sensor •Air / fuel ratio sensor •ECM
P0132	When either one of following two conditions applied for 1 second or longer (1 trip detection logic): •A1A+voltage is 4.7 V or more. •A1A-voltage is 4.7 V or more.	
P0134	Impedance of air/fuel ratio sensor is 450 Ωor more for 5 seconds or longer. (1 trips detection logic)	

MONITOR DESCRIPTION

If open/short condition is present in the air/fuel ratio circuit or the air/fuel ratio sensor output decreases, these DTCs are displayed. In order to detect the problem, the air/fuel ratio sensor is monitored when the ignition is turned ON and an admittance (electrical terminology to express how easily a current can flow) is checked when the vehicle is being driven. If the air/fuel ratio sensor voltage stays between 0.6 V and 4.5 V, the condition is considered normal. If the voltage is out of the specified range or the admittance is less than the standard value, the ECM judges that there is a malfunction in the air/fuel ratio sensor. If the same malfunction is detected in the next drive cycle, the ECM turns on the MIL and stores the DTC.

Monitor strategy

Related DTCs	P0131: Primary oxygen sensor - ECM input voltage circuit continuity P0132: Primary oxygen sensor - ECM input voltage circuit continuity P0134: Primary oxygen sensor - Output voltage circuit continuity
Required Sensors/Components (Main)	Air / fuel ratio sensor
Required Sensors/Components (Related)	-
Frequency of Operation	Continuous
Duration	1 second: P0131, P0132 5 seconds: P0134
MIL Operation	Immediately after
Sequence of Operation	None

TYPICAL ENABLING CONDITIONS

All

Overlap prohibited DTC	None

P0131, P0132

Battery Voltage	10.9V or more

P0134

Battery Voltage	10.9V or more
Primary oxygen sensor heater control duty for time	36 seconds or longer, 70 % or more

ES

TYPICAL MALFUNCTION THRESHOLDS

P0131

ECM input voltage (+)	Less than 0.4V
ECM input voltage (-)	Less than 0.4V
ABS ((ECM input voltage (+)) - (ECM input voltage (-)))	Less than 0.1V
ECM input voltage (-)	More than 3.8 V and less than 4.7 V

P0132

ECM input voltage (+)	More than 4.7 V
ECM input voltage (-)	More than 4.7 V

P0134

Impedance of primary oxygen sensor	More than 450 Ω

Circuit figure

For a circuit description, refer to ES - 134.

Description of functions

Test drive (P0131, P0132)

Perform test drive to check if the DTC recurs.

1. Connect the SSM4 to the DLC3.
2. Turn the ignition switch to ON.
3. Turn on the SSM4.
4. Follow the SSM4 on-screen instructions to clear the DTCs. (Refer to ES - 28)
5. Turn the ignition switch to OFF, and wait for 30 seconds.
6. Turn the ignition switch to ON.
7. Turn on the SSM4.
8. Start the engine.
   NOTE:
   If the engine cannot be started, crank the engine for 10 seconds or more.
9. Idle the engine for 20 seconds or more.
10. Follow the SSM4 on-screen instructions to check the DTC. (Refer to ES - 28)

Test drive (P0134)

Perform test drive to check if the DTC recurs.

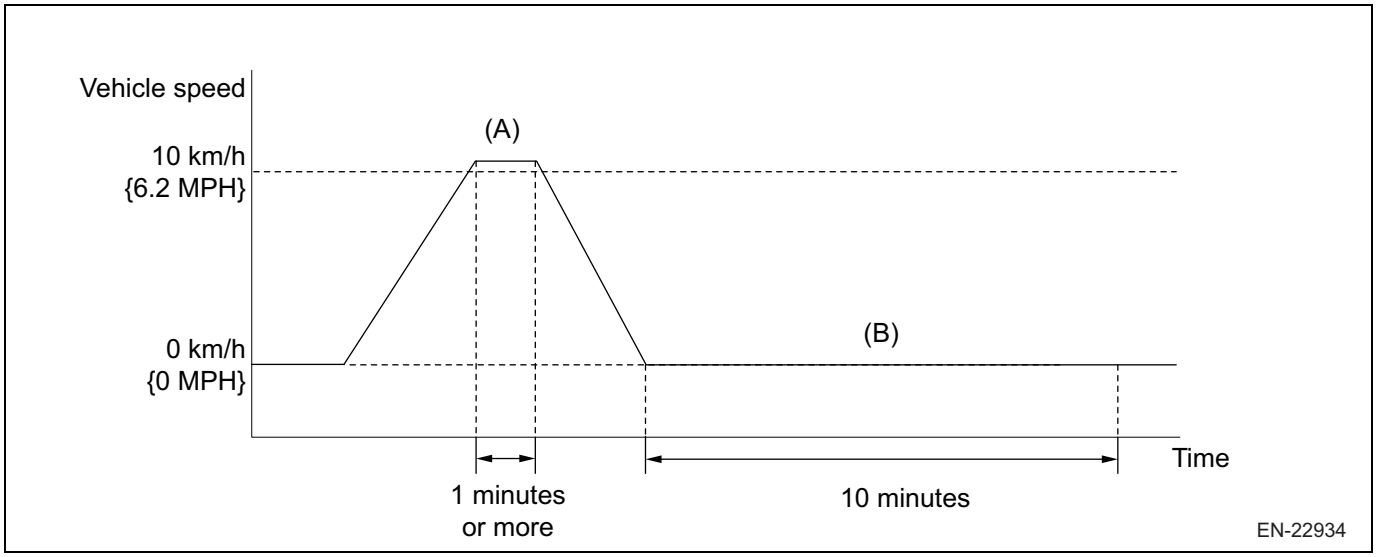

1. Connect the SSM4 to the DLC3.
2. Turn the ignition switch to ON.
3. Turn on the SSM4.
4. Follow the SSM4 on-screen instructions to clear the DTCs. (Refer to ES - 28)
5. Turn the ignition switch to OFF, and wait for 30 seconds.
6. Turn the ignition switch to ON.
7. Turn on the SSM4.
8. Start the engine.
9. Perform driving test as follows.
   WARNING:
   When performing this driving test, always observe the applicable traffic laws such as the speed limit.
   (a) Drive at 10 km/h {6.2 MPH} or more for 1 minute or more. (A)
   (b) Stop the vehicle.
   (c) Idle the engine for 10 minutes or more. (B)
10. Follow the SSM4 on-screen instructions to check the DTC. (Refer to ES - 28)

Inspection steps

CAUTION:

Before performing troubleshooting, check the fuse for this circuit.

NOTE:

- Read the freeze frame data using the SSM4. A part of the engine running conditions under which the engine trouble occurred is recorded in the freeze frame data, which is useful for troubleshooting.
- Check [A/F Sensor #11] data reading. (Refer to ES - 43)

1	Check wiring harness and connector (engine control computer - air/fuel ratio sensor)

NOTE:

For the inspection procedure and precautions for wiring harnesses and connectors, refer to IN - 36.

(1) Disconnect the connector for the engine control computer.
(2) Disconnect the air/fuel ratio sensor connector.
(3) Measure the resistance between the terminals. (For terminal arrangement, refer to ES - 36.)

Resistance (open circuit check)

Inspection terminals	Inspection conditions	Standard value
A34-19 (A1A+) - C14-3 (A1A+)	Always	Less than 1 Ω
A34-18 (A1A-) - C14-4 (A1A-)	Always	Less than 1 Ω

Inspection terminals	Inspection conditions	Standard value
A34-5 (HA1A) - C14-1 (HA1A)	Always	Less than 1 Ω

Resistance (short circuit check)

Inspection terminals	Inspection conditions	Standard value
A34-19 (A1A+) and C14-3 (A1A+) - other terminals and chassis ground	Always	10 k Ωor more
A34-18 (A1A-) and C14-4 (A1A-) - other terminals and chassis ground	Always	10 k Ωor more
A34-5 (HA1A) and C14-1 (HA1A) - other terminals and chassis ground	Always	10 k Ωor more

ES

NG → Repair or replacement of wiring harness or connector

OK

2	Air/fuel ratio sensor replacement

(1) Replace the air/fuel ratio sensor. (Refer to ES - 707)

Next

3	Clear DTC

(1) Connect the SSM4 to the DLC3.
(2) Turn the ignition switch to ON.
(3) Follow the SSM4 on-screen instructions to clear the DTCs. (Refer to ES - 28)
(4) Turn the ignition switch to OFF, and wait for 30 seconds.

Next

4	Perform test drive for operation check

(1) Perform test drive. (Refer to "Test drive" under "Description of functions")
(2) Check the results.

Result

Result	Go to
Normal	A
Malfunction	B

B → Replacement of the engine control computer (Refer to ES - 670)

A

Complete

DTC	P0137	Oxygen Sensor Circuit Low Voltage (Bank 1 Sensor 2)

Circuit description

For a circuit description, refer to ES - 141.

DTC No.	DTC detection condition	Suspected parts
P0137	Oxygen (HO2) sensor voltage. Less than 1.91 V (judgment 1) Less than 1.81 V (judgment 2) Less than -0.22 V (judgment 3)	• Oxygen sensor circuit • Oxygen sensor • Gas leakage from exhaust system

ES

MONITOR DESCRIPTION

1. Open condition in oxygen (HO2) senor circuit

   Under active air/fuel ratio control, the ECM calculates oxygen storage capacity (OSC)* of the three-way catalytic converter (TWC) through a forced air/fuel ratio adjustment. As the result the ratio is changes from rich to lean.

   If open/short condition is present in the oxygen sensor or the sensor output voltage drops significantly, the OSC value becomes abnormally high. In such case, even if the ECM continues to attempt the air/fuel ratio adjustment to make a rich/lean condition happen, the oxygen sensor output will not change.

   If the target air/fuel ratio is rich and the oxygen sensor output voltage is 0.03 V or less (lean) while active air/fuel ratio control is in progress, the ECM judges that the sensor output voltage is abnormally low and stores DTC P0137.

   NOTE:

   *: The TWC has a specific capacity to store oxygen. OSC and the exhaust gas cleanup function relate to each other. The ECM judges by the calculated OSC value whether the catalyst is deteriorated or not. (Refer to ES - 329)

MONITOR STRATEGY

Related DTCs	Secondary oxygen sensor - A lack of circuit continuity output range check
Required Sensors/Components (Main)	Oxygen sensor
Required Sensors/Components (Related)	Crankshaft position sensor E.F.I. water temperature sensor Intake air flow meter SUB-ASSY Throttle position sensor Air / fuel ratio sensor
Frequency of Operation	Once per driving cycle: active air/fuel ratio control detected during fuel cutoff, oxygen sensor voltage failure Continuous: Others
Duration	1 second
MIL Operation	2 operation cycle
Sequence of Operation	None

TYPICAL ENABLING CONDITIONS

Judgment 1:

Battery voltage	10.9V or more

Judgment 2,3:

Estimated secondary oxygen sensor element temperature	500°C {932°F} or more
Battery voltage	10.9V or more
Integrated duty ratio of the secondary oxygen sensor heater operation from engine start	12500% or more
Secondary oxygen sensor offset signal	1.91V or more and 2.31 V or less

TYPICAL MALFUNCTION THRESHOLDS

Judgment 1:Short to ground

Secondary oxygen sensor offset signal	Less than 1.91V

Judgment 2:Circuit open

Secondary oxygen sensor signal	Less than 1.81V

Judgment 3:Out of range

Secondary oxygen sensor output voltage	Less than -0.22V

ES

Monitoring result

Refer to [Monitor status check]. (Refer to ES - 24)

Circuit figure

For a circuit description, refer to ES - 134.

Description of functions

Test drive

Perform test drive to check if the DTC recurs.

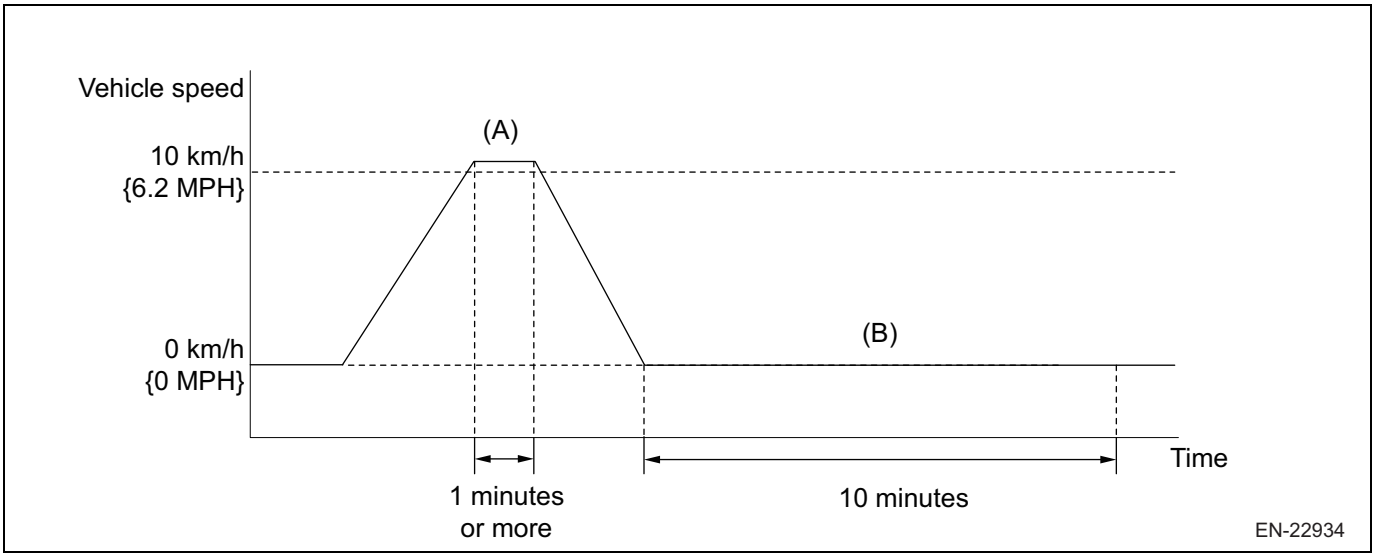

1. Connect the SSM4 to the DLC3.
2. Turn the ignition switch to ON.
3. Turn on the SSM4.
4. Follow the SSM4 on-screen instructions to clear the DTCs. (Refer to ES - 28)
5. Turn the ignition switch to OFF, and wait for 30 seconds.
6. Turn the ignition switch to ON.
7. Turn on the SSM4.
8. Start the engine.
9. Perform driving test as follows.
   WARNING:
   When performing this driving test, always observe the applicable traffic laws such as the speed limit.
   (a) Drive at 10 km/h {6.2 MPH} or more for 1 minute or more. (A)
   (b) Stop the vehicle.
   (c) Idle the engine for 10 minutes or more. (B)
10. Follow the SSM4 on-screen instructions to check the DTC. (Refer to ES - 28)

Inspection steps

1	Check of oxygen sensor data

(1) Continue warming up the engine until the engine coolant temperature is more than 75°C (167°F), and maintain the engine speed at 3000 r/min (no longer than 2 minutes).
(2) Maintain the engine speed on idling (for 1 minute).
(3) Select the following menu items using the SSM4. : [Each System] / [Engine Control System] / [Data monitor] / [Oxygen sensor #12]
(4) Check the value of [Oxygen sensor #12].

Result

Result	Go to
Voltage of the O2 sensor #12 is 0.490 V or more	A
Voltage of the O2 sensor #12 is 0.490 V or less	B

A → Go to Step 5.

B

2	Check of oxygen sensor connector and intermediate connector

(1) Check oxygen sensor connector and intermediate connector.
Is there ingress of water to the connector?

Result

Result	Go to
There is ingress of water to the connector	A
There is no ingress of water to the connector	B

A → Thoroughly remove water from the connectors.

BK

3	Check of harness between engine control computer and oxygen sensor connector

(1) Turn the ignition switch to OFF.
(2) Disconnect the connectors from the engine control computer.
(3) Disconnect the oxygen sensor connector.
(4) Measure the resistance between the terminals. (For terminal arrangement, refer to ES - 36.)

Resistance

Inspection terminals	Standard value
A34-18 (A1A-) - C14-4 (A1A-)	Less than 1 Ω
A34-19 (A1A+) - C14-3 (A1A+)	Less than 1 Ω

NG → Repair open circuit of harness between engine control computer and oxygen sensor connector.

OK

4	Check of harness between engine control computer and oxygen sensor connector

(1) Connect connectors to the engine control computer.
(2) Turn the ignition switch to ON.
(3) Check voltage between the oxygen sensor connector and the chassis ground.

Voltage

ES

Inspection terminals	Standard value
C14-4 (A1A-) - chassis ground	1.91V or more

NG → Replace the engine control computer. (Refer to ES - 670)

OK

Replace the oxygen sensors. (Refer to ES - 710)

5	Check the exhaust system.

(1) Inspection of exhaust system parts
Check the following items.
- Looseness and improper installation of exhaust system parts
- Damage of parts (cracks and holes)
- Looseness and improper installation of parts between the air/fuel ratio sensor and the oxygen sensor

NG → Replace the oxygen sensors. (Refer to ES - 710)

OK

Repair or replace the faulty parts. (Refer to IE - 35)

DTC	P0138	Oxygen Sensor Circuit High Voltage (Bank 1 Sensor 2)

Circuit description
For a circuit description, refer to ES - 141.

DTC No.	DTC detection condition	Suspected parts
P0138	Oxygen (HO2) sensor voltage is for 1 second or more: more than 2.31 V (judgment 1) more than 3.36 V (judgment 2) more than 1.2 V (judgment 3) (2 trips detection logic)	• Oxygen sensor circuit • Oxygen sensor • Gas leakage from exhaust system

MONITOR DESCRIPTION

1. Oxygen (HO2) sensor output voltage is abnormally high
The ECM monitors oxygen sensor output voltage continuously while the engine is running.
If the oxygen sensor output voltage is 1.2 V or more, DTC P0138 is stored.

MONITOR STRATEGY

Related DTCs	Secondary oxygen sensor - A lack of circuit continuity output range check
Required Sensors/Components (Main)	Oxygen sensor
Required Sensors/Components (Related)	Crankshaft position sensor E.F.I. water temperature sensor Intake air flow meter SUB-ASSY Throttle position sensor Air / fuel ratio sensor
Frequency of Operation	Once per driving cycle: active air/fuel ratio control detected during fuel cutoff, oxygen sensor voltage failure Continuous: Others
Duration	1 second
MIL Operation	2 operation cycle
Sequence of Operation	None

TYPICAL ENABLING CONDITIONS

Battery voltage	10.9V or more

TYPICAL MALFUNCTION THRESHOLDS

Judgment 1:Short to battery

Secondary oxygen sensor offset signal	More than 2.31 V

Judgment 2:Short to battery

Secondary oxygen sensor signal	More than 3.36 V

Judgment 3:Out of range

Secondary oxygen sensor output voltage	More than 1.2 V

Monitoring result

Refer to [Monitor status check]. (Refer to ES - 24)

Circuit figure

For a circuit description, refer to ES - 134.

Description of functions

Test drive

Perform test drive to check if the DTC recurs.

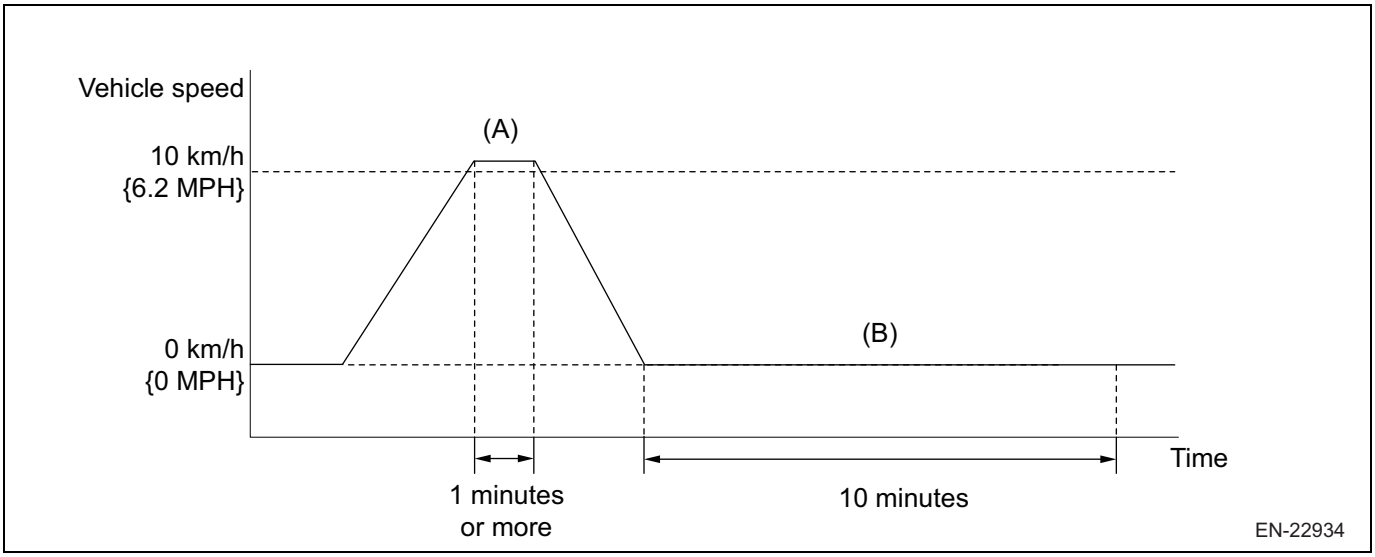

1. Connect the SSM4 to the DLC3.
2. Turn the ignition switch to ON.
3. Turn on the SSM4.
4. Follow the SSM4 on-screen instructions to clear the DTCs. (Refer to ES - 28)
5. Turn the ignition switch to OFF, and wait for 30 seconds.
6. Turn the ignition switch to ON.
7. Turn on the SSM4.
8. Start the engine.
9. Perform driving test as follows.
   WARNING:
   When performing this driving test, always observe the applicable traffic laws such as the speed limit.
   (a) Drive at 10 km/h {6.2 MPH} or more for 1 minute or more. (A)
   (b) Stop the vehicle.
   (c) Idle the engine for 10 minutes or more. (B)
10. Follow the SSM4 on-screen instructions to check the DTC. (Refer to ES - 28)

Inspection steps

1	Check of oxygen sensor data

(1) Continue warming up the engine until the engine coolant temperature is more than 75°C (167°F), and maintain the engine speed at 3000 r/min (no longer than 2 minutes).
(2) Maintain the engine speed on idling (for 1 minute).
(3) Select the following menu items using the SSM4. : [Each System] / [Engine Control System] / [Data monitor] / [Oxygen sensor #12]
(4) Check the value of [Oxygen sensor #12].

Result

Result	Go to
Voltage of the O2 sensor #12 is 0.490 V or more	A
Voltage of the O2 sensor #12 is 0.490 V or less	B

A → Go to Step 5.

B

2	Check of oxygen sensor connector and intermediate connector

(1) Check oxygen sensor connector and intermediate connector.
Is there ingress of water to the connector?

Result

Result	Go to
There is ingress of water to the connector	A
There is no ingress of water to the connector	B

ES

A → Thoroughly remove water from the connectors.

BK

3	Check of harness between engine control computer and oxygen sensor connector

(1) Turn the ignition switch to OFF.
(2) Disconnect the connectors from the engine control computer.
(3) Disconnect the oxygen sensor connector.
(4) Measure the resistance between the terminals. (For terminal arrangement, refer to ES - 36.)

Resistance

Inspection terminals	Standard value
A34-18 (A1A-) - C14-4 (A1A-)	Less than 1 Ω
A34-19 (A1A+) - C14-3 (A1A+)	Less than 1 Ω

NG → Repair open circuit of harness between engine control computer and oxygen sensor connector.

OK

4	Check of harness between engine control computer and oxygen sensor connector

(1) Connect connectors to the engine control computer.
(2) Turn the ignition switch to ON.
(3) Check voltage between the oxygen sensor connector and the chassis ground.

Voltage

Inspection terminals	Standard value
C14-4 (A1A-) - chassis ground	2.31 V or less

NG → Replace the engine control computer. (Refer to ES - 670)

OK

Replace the oxygen sensors. (Refer to ES - 710)

5	Check the exhaust system.

(1) Inspection of exhaust system parts
Check the following items.

- Looseness and improper installation of exhaust system parts
- Damage of parts (cracks and holes)
- Looseness and improper installation of parts between the air/fuel ratio sensor and the oxygen sensor

NG → Replace the oxygen sensors. (Refer to ES - 710)

OK

ES

Repair or replace the faulty parts. (Refer to IE - 35)

DTC	P013A	O2 Sensor Slow Response - Rich to Lean (Bank 1 Sensor 2)

DTC	P013B	O2 Sensor Slow Response - Lean to Rich (Bank 1 Sensor 2)

DTC	P013E	O2 Sensor Delayed Response - Rich to Lean (Bank 1 Sensor 2)

DTC	P013F	O2 Sensor Delayed Response - Lean to Rich (Bank 1 Sensor 2)

Circuit description

For a circuit description, refer to ES - 138.

DTC No.	DTC detection condition	Suspected parts
P013A	Response time that oxygen sensor voltage reaches from 0.5 V (rich) to 0.2 V (lean) exceeds 0.5 seconds. (2 trips detection logic)	• Oxygen sensor circuit • Oxygen sensor • Gas leakage from exhaust system
P013B	Response time that oxygen sensor voltage reaches from 0.3 V (lean) to 0.5 V (rich) exceeds 4 seconds. (2 trips detection logic)	
P013E	It takes more than 4 seconds before the oxygen sensor voltage drops to 0.5 V or lower. (2 trips detection logic)	
P013F	It takes more than 120 seconds before the oxygen sensor voltage rises to 0.3 V or more. (2 trips detection logic)	

MONITOR DESCRIPTION

1. Oxygen (HO2) sensor output voltage failure (DTC P013B or P013F)
   If the sensors malfunction, the amount of change in their output voltage becomes smaller. For example, if the oxygen sensor voltage does not drop to less than 0.15 V and not increase to 0.55 V or higher, the ECM judges that sensor output voltage is abnormal and stores DTC P013B or P013F.

HO2 Sensor Circuit Malfunction

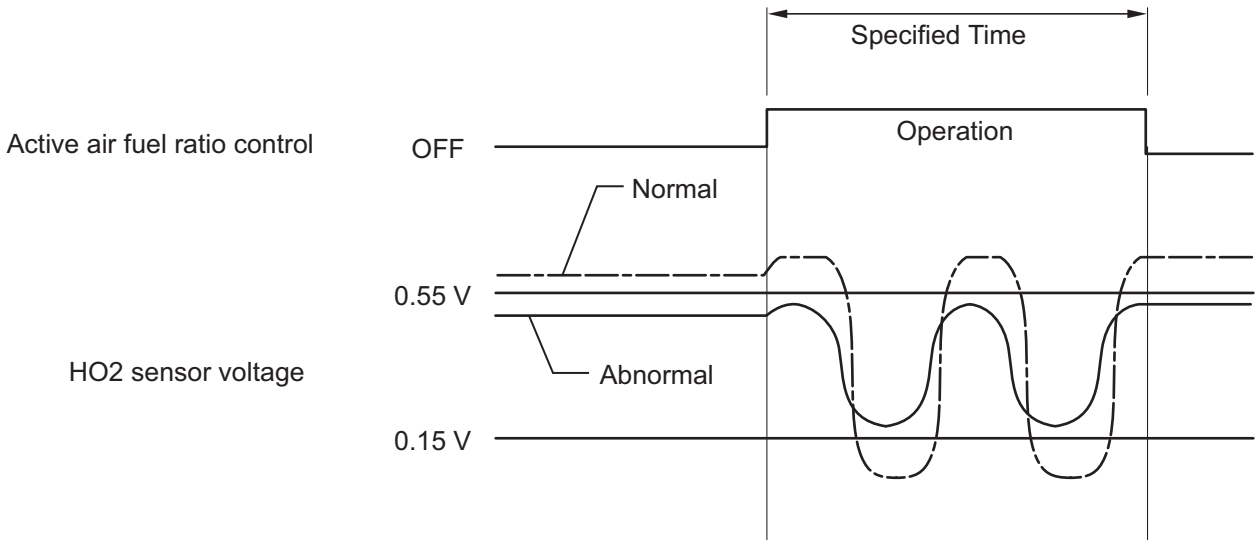

Y

2. Oxygen (HO2) sensor output voltage failure under fuel cutoff (DTC P013A or P013E)
When fuel supply is cut off as the vehicle slows down. the sensor output voltage immediately drops to less than 0.2 V (extremely lean condition). If the voltage does not drop to less than 0.5 V for 4 seconds or longer, or the voltage does not decrease from 0.5 V to 0.2 V, the ECM judges that there is a malfunction in sensor repose. In such case, the MIL illuminates and the DTC is stored.

Monitor strategy

Related DTCs	P013A: Secondary oxygen sensor - Response rate functional check P013B: Secondary oxygen sensor - Response rate functional check P013E: Secondary oxygen sensor - Response rate functional check P013F: Secondary oxygen sensor - Response rate functional check
Required Sensors/Components (Main)	Oxygen sensor
Required Sensors/Components (Related)	Crankshaft position sensor E.F.I. water temperature sensor Intake air flow meter SUB-ASSY Throttle position sensor Air / fuel ratio sensor
Frequency of Operation	Once per driving cycle: active air/fuel ratio control detected during fuel cutoff, oxygen sensor voltage failure Continuous: Others
Duration	Less than 1 second
MIL Operation	2 operation cycle
Sequence of Operation	None

TYPICAL ENABLING CONDITIONS

P013A

Battery voltage	10.9V or more
Oxygen sensor heater total operating time	180 seconds or more

Output voltage of oxygen sensor when fuel cutoff off begins	0.55 V or more
Time elapsed after fuel cutoff	5 seconds or more
Estimated temperature of oxygen sensor element when fuel is cut	500°C {932°F} or more

P013B

Battery voltage	10.9V or more
Fuel system	Closed loop
Time elapsed after fuel cutoff	3 seconds or more
Fuel shut-off function from the items described above	Stop

P013E

Battery voltage	10.9V or more
Output voltage of oxygen sensor when fuel cutoff off begins	0.55 V or more
Time elapsed after fuel cutoff	5 seconds or more
Fuel shut-off function from the items described above	Stop
Estimated temperature of oxygen sensor element when fuel is cut	500°C {932°F} or more

P013F

Battery voltage	10.9V or more
Fuel system	Closed loop
Output voltage of oxygen sensor when fuel cutoff off ends	0.15V or less
Time elapsed after fuel cutoff	3 seconds or more
Fuel shut-off function from the items described above	Stop
Estimated temperature of oxygen sensor element when fuel is cut	500°C {932°F} or more
Intake amount per second	18 g/sec or more

TYPICAL MALFUNCTION THRESHOLDS

P013A

Rich (0.5 V) to lean (0.2 V) response time when output voltage drops from 0.55 V to 0.15 V	More than 0.491 seconds

P013B

Lean (0.2 V) to rich (0.5 V) response time when output voltage rises from 0.25 V to 0.55 V	More than 4 seconds

P013E

Response time taken for the oxygen sensor output voltage to reach 0.5V after fuel cutoff begins	More than 4 seconds

P013F

Secondary oxygen sensor output voltage	Less than 0.2V
Elapsed time	More than 4 seconds (varies depending on the intake air volume)

Monitoring result

Refer to [Monitor status check]. (Refer to ES - 24)

Circuit figure

For a circuit description, refer to ES - 141.

Description of functions

Test drive (P013A, P013B, P013E)

Perform test drive to check if the DTC recurs.

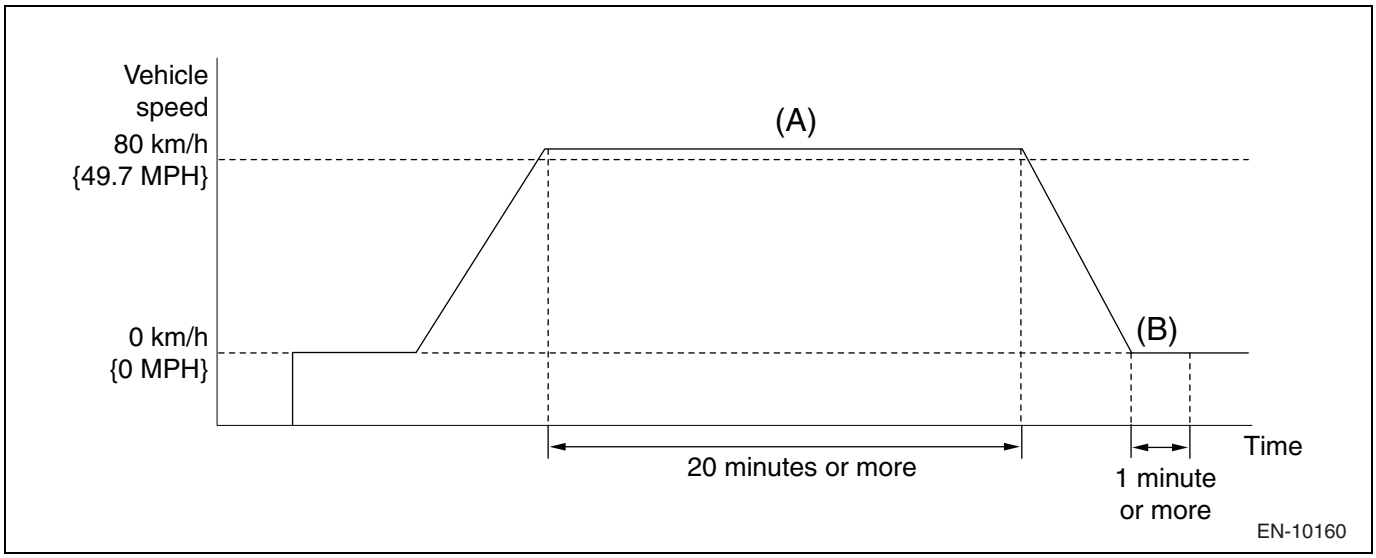

1. Connect the SSM4 to the DLC3.
2. Turn the ignition switch to ON.
3. Turn on the SSM4.
4. Follow the SSM4 on-screen instructions to clear the DTCs. (Refer to ES - 28)
5. Turn the ignition switch to OFF, and wait for 30 seconds.
6. Turn the ignition switch to ON.
7. Turn on the SSM4.
8. Start the engine and let it warm up until the engine coolant temperature stabilizes. (at 75°C {167°F} or more).
9. Perform driving test as follows.

   WARNING:

   When performing this driving test, always observe the applicable traffic laws such as the speed limit.

   (a) Drive at 80 km/h {49.7 MPH} or more for 20 minutes or more. (A)

   (b) Stop the vehicle.

   (c) Idle the engine for 1 minute or more. (B)
10. Follow the SSM4 on-screen instructions to check the DTC. (Refer to ES - 28)

Test drive (P013F)

Perform test drive to check if the DTC recurs.

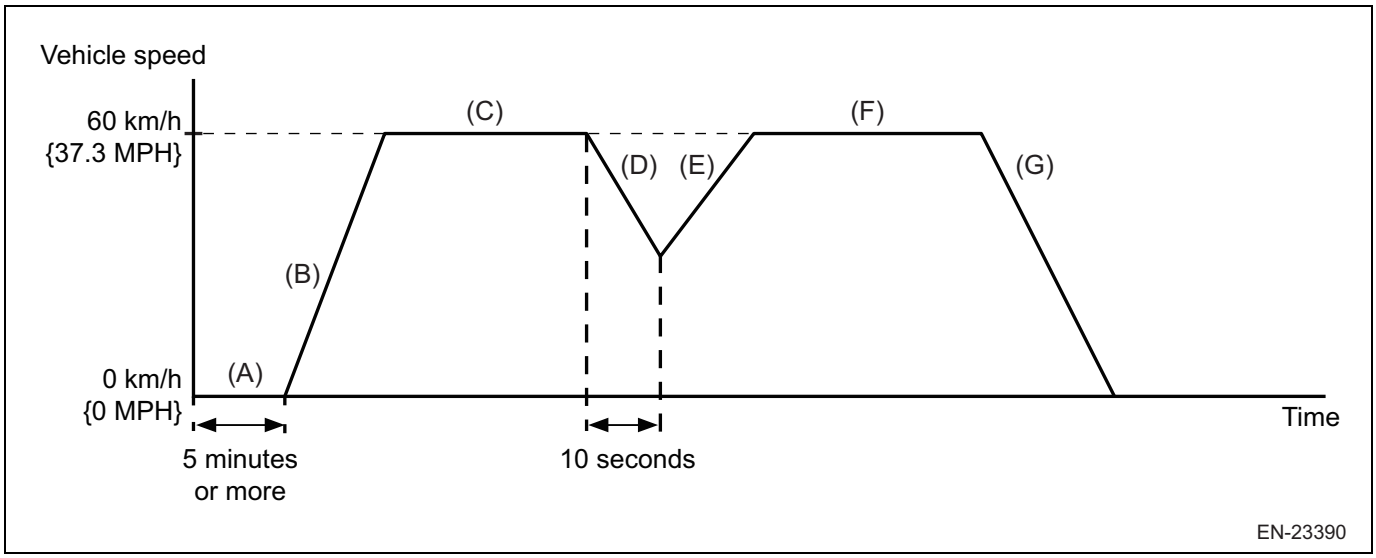

1. Connect the SSM4 to the DLC3.
2. Turn the ignition switch to ON.
3. Turn on the SSM4.

4. Follow the SSM4 on-screen instructions to clear the DTCs. (Refer to ES - 28)
5. Turn the ignition switch to OFF, and wait for 30 seconds.
6. Turn the ignition switch to ON.
7. Turn on the SSM4.
8. Start the engine.
9. Perform driving test as follows.
   WARNING:
   When performing this driving test, always observe the applicable traffic laws such as the speed limit.
   (a) Idle the engine for 5 minutes or more. (A)
   (b) Accelerate to 60 km/h {37.3 MPH}. (B)
   (c) Maintain a constant speed of 60 km/h {37.3 MPH}. (C)
   (d) After maintaining a speed of 60 km/h {37.3 MPH}, change the accelerator opening angle to 0 %, and perform the fuel cut operation for 10 seconds. (D)
   (e) Accelerate to 60 km/h {37.3 MPH}. (E)
   (f) Maintain a constant speed of 60 km/h {37.3 MPH}. (F)
   (g) Decelerate and stop the vehicle. (G)
10. Follow the SSM4 on-screen instructions to check the DTC. (Refer to ES - 28)

ES

Inspection steps

1	Read DTC

(1) Connect the SSM4 to the DLC3.
(2) Turn the ignition switch to ON.
(3) Turn on the SSM4.
(4) Follow the SSM4 on-screen instructions to check the DTC. (Refer to ES - 28)

Result

Result	Go to
P013A, P013B, P013E or P013F code is output	A
P013A, P013B, P013E or P013F and other codes are output	B

B → To corresponding DTC chart (refer to ES - 12)

A

2	Performing of SSM4 [Active Test] ([Cylinder Fuel Rate])

(1) Connect the SSM4 to the DLC3.
(2) Turn the ignition switch to ON.
(3) Turn on the SSM4.
(4) Start the engine, turn off all the accessory switches, and wait until the engine warms up and the coolant temperature stabilizes. (at 80°C {176°F} or more).
(5) Run the engine at 2500 r/min for approximately 3 minutes to warm up oxygen sensors.
(6) Idle the engine.
(7) Select the following menu items using the SSM4. : [Each System] / [Engine Control System] / [Work Support] / [Active Test] / [Cylinder Fuel Rate]
(8) Run the engine on idling, increase and decrease fuel injection amount, and read values of [Oxygen sensor #12].

CAUTION:
- Because oxygen sensors become cold, perform the operation after heating the sensors.
- Voltage output of oxygen sensors delays maximum of approximately 20 seconds.

NOTE:
Change fuel injection volume from -12 % to +12 %.
Voltage: Voltages of 0.4 V or less and 0.55 V or more are output alternately.

NG → Go to Step 4.

OK

3	SSM4 [System Operation Check] mode ([Cylinder Fuel Rate])

(1) Connect the SSM4 to the DLC3.
(2) Turn the ignition switch to ON.
(3) Turn on the SSM4.
(4) Start the engine, turn off all the accessory switches, and wait until the engine warms up and the coolant temperature stabilizes. (at 80°C {176°F} or more).
(5) Run the engine at 2500 r/min for approximately 3 minutes to warm up the air/fuel ratio sensor.
(6) Select the following menu items using the SSM4. : [Each System] / [Engine Control System] / [Work Support] / [Active Test] / [Cylinder Fuel Rate]
(7) Run the engine on idling, increase and decrease fuel injection amount, and read values of [A/F Sensor #11].
CAUTION:
- Because the air/fuel ratio sensor becomes cold, perform the work after heating the sensor.
- Voltage output of the air/fuel ratio sensor delays a few seconds.

NOTE:
- Change fuel injection volume from -12 % to +12 %.
- If the air/fuel ratio sensor output shows little response, the air/fuel ratio sensor may be at fault.

Result

Item name	Result	Go to
[A/F Sensor #11]	Output voltage changes near 2.2 V	OK
	Output voltage is 2.2 V or more constantly	NG
	Output voltage is 2.2 V or less constantly	NG

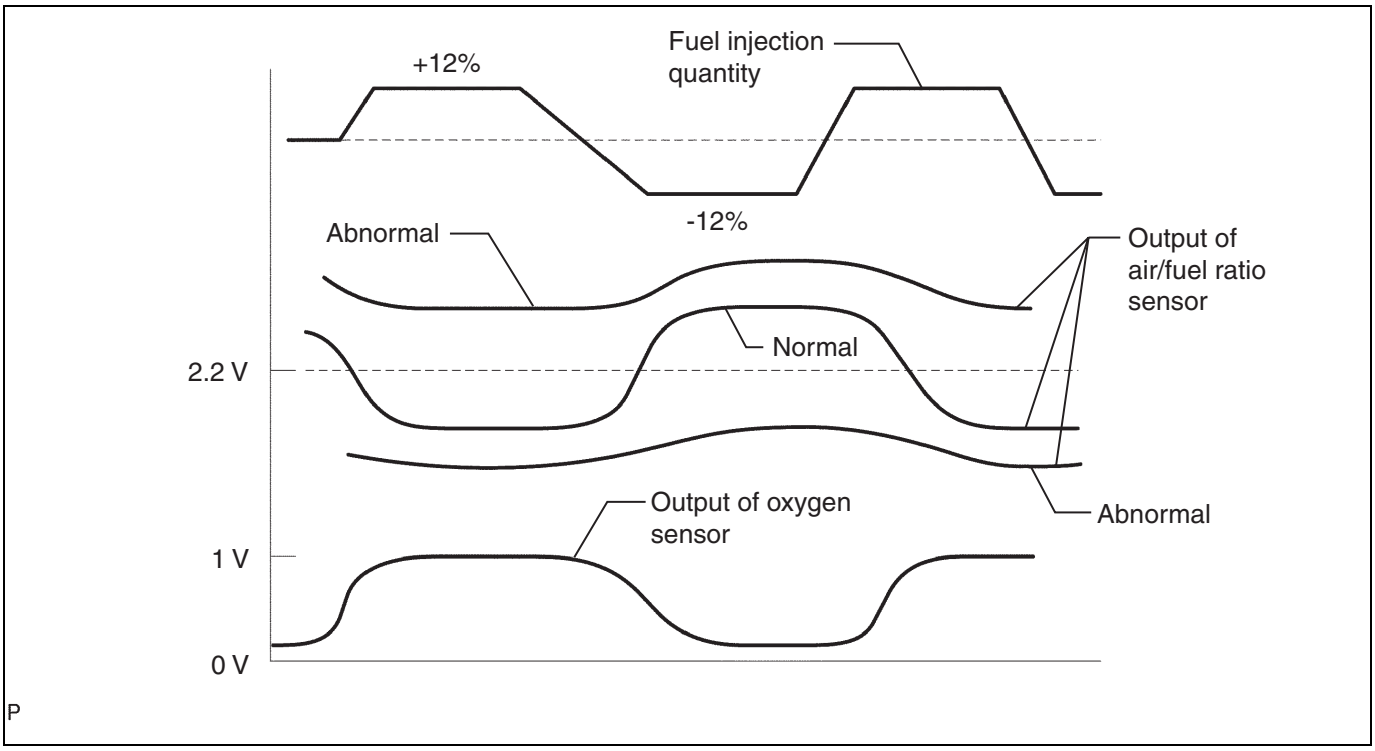

NG → Go to Step 10.

OK

Fix causes of extreme lean or rich conditions (fuel injector ASSY, fuel pressure, exhaust gas leakage, etc.)

4	Exhaust gas leakage check

(1) Make sure that exhaust gas is not leaking from connections of exhaust pipes and installation areas of sensors.
Criteria: There is no exhaust leakage.

NG → Repair of exhaust gas leakage

OK

5	Oxygen sensor unit inspection

(1) Perform oxygen sensor unit inspection. (Refer to ES - 712)

NG → Oxygen sensor replacement

OK

6	Check wiring harness and connector (oxygen sensor - engine control computer)

NOTE:
Refer to IN - 36for inspection procedure and precautions of wiring harness and connector.
(1) Disconnect the oxygen sensor connector.
(2) Disconnect the connector for the engine control computer.

(3) Measure the resistance between the terminals. (Refer to ES - 36for terminal arrangement.)

Resistance (open circuit check)

Inspection terminals	Inspection conditions	Standard value
A36-6 (HT1B) - C13-1 (HT1B)	Always	Less than 1 Ω
A34-21 (OX1B) - C13-3 (OX1B)	Always	Less than 1 Ω
B8(E2) - C13-4(E2)	Always	Less than 1 Ω

Resistance (open circuit check)

Inspection terminals	Inspection conditions	Standard value
A36-6 (HT1B) and C13-1 (HT1B) - other terminals and chassis ground	Always	10 k Ωor more
A34-21 (OX1B) and C13-3 (OX1B) - other terminals and chassis ground	Always	10 k Ωor more
B8 (E2) and C13-4 (E2) - other terminals and chassis ground	Always	10 k Ωor more

NG → Repair or replacement of wiring harness or connector

OK

7 Oxygen sensor replacement

(1) Replace the oxygen sensors. (Refer to ES - 710)

Next

8 Clear DTC

(1) Connect the SSM4 to the DLC3.
(2) Turn the ignition switch to ON.
(3) Turn on the SSM4.
(4) Follow the SSM4 on-screen instructions to clear the DTCs. (Refer to ES - 28)
(5) Turn the ignition switch to OFF, and wait for 30 seconds.

Next

9 Perform test drive for operation check

(1) Perform test drive. (Refer to "Test drive" under "Description of functions")
WARNING:
When performing this driving test, always observe the applicable traffic laws such as the speed limit.
(2) Check the results.

Result

Result	Go to
Normal	A
Malfunction	B

B → Replacement of the air/fuel ratio sensor (Refer to ES - 707)

A

Complete

10	Replacement of the air/fuel ratio sensor

(1) Replace the air/fuel ratio sensor. (Refer to ES - 707)

ES

Next

11	Clear DTC

(1) Connect the SSM4 to the DLC3.
(2) Turn the ignition switch to ON.
(3) Turn on the SSM4.
(4) Follow the SSM4 on-screen instructions to clear the DTCs. (Refer to ES - 28)
(5) Turn the ignition switch to OFF, and wait for 30 seconds.

Next

12	Perform test drive for operation check

(1) Perform test drive. (Refer to "Test drive" under "Description of functions")
WARNING:
When performing this driving test, always observe the applicable traffic laws such as the speed limit.
(2) Check the results.

Result

Result	Go to
Normal	A
Malfunction	B

B → Replacement of oxygen sensor (Refer to ES - 710)

A

Complete

DTC	P014C	O2 Sensor Slow Response - Rich to Lean (Bank 1 Sensor 1)

DTC	P014D	O2 Sensor Slow Response - Lean to Rich (Bank 1 Sensor 1)

DTC	P015A	O2 Sensor Delayed Response - Rich to Lean (Bank 1 Sensor 1)

DTC	P015B	O2 Sensor Delayed Response - Lean to Rich (Bank 1 Sensor 1)

ES

Circuit description

For a circuit description, refer to ES - 564.

DTC No.	DTC detection condition	Suspected parts
P014C	[Response rate deterioration degree from rich to lean*] exceeds normal value. (2 trips detection logic)	• Air/fuel ratio sensor (bank1 sensor1) • Air/fuel ratio sensor (bank 1 sensor 1) heater • ECM
P014D	[Response rate deterioration degree from lean to rich*] exceeds normal value. (2 trips detection logic)	
P015A	[Delay degree from lean to rich*] exceeds normal value. (2 trips detection logic)	
P015B	[Delay degree from rich to lean*] exceeds normal value. (2 trips detection logic)	

*: Calculated by the ECM based on the air/fuel ratio sensor output.

MONITOR DESCRIPTION

P014C, P014D (asymmetric delay response)

The ECM monitors the time the output waveform of the air/fuel ratio sensor is near its maximum and minimum values as time (m) and time (n).

P014C:

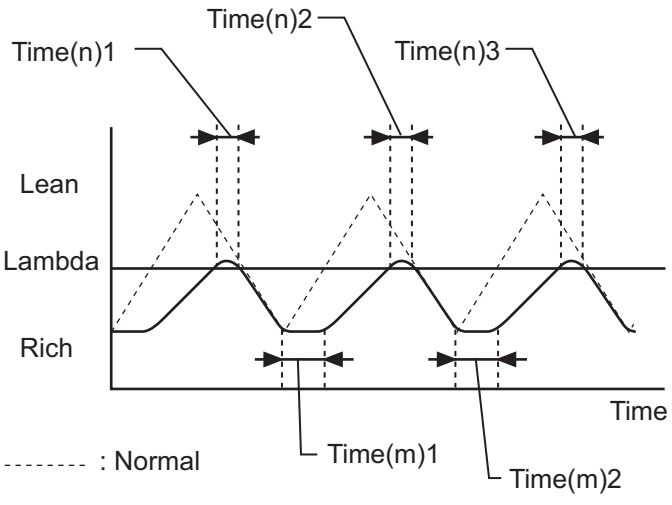

n: Local Maximum

m: Local Minimum

Average of Time(n) = (Time(n)1 + Time(n)2 + ···· / Number of Peaks

Average of Time(m) = (Time(m)1 + Time(m)2 + ···· / Number of Peaks

Malfunction: Average of Time(m) - Average of Time(n) = 0.08 seconds or more

P014D:

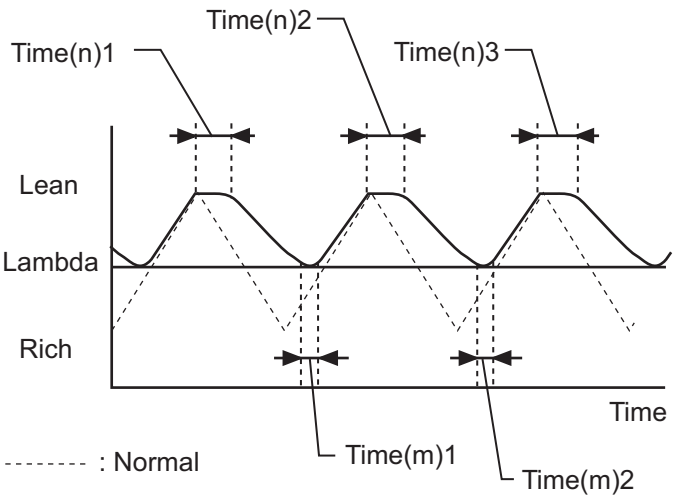

n: Local Maximum

m: Local Minimum

Average of Time(n) = (Time(n)1 + Time(n)2 + ···· / Number of Peaks

Average of Time(m) = (Time(m)1 + Time(m)2 + ···· / Number of Peaks

Malfunction: Average of Time(n) - Average of Time(m) = 0.1 seconds or more

If the difference between the average of time (m) and the average of time (n) reaches or exceeds the specified value, and, for the air/ratio sensor output accumulation time, the air/ratio sensor's lambda reduction time is low, P014C is recorded. If high, P014D is recorded.

P014C:

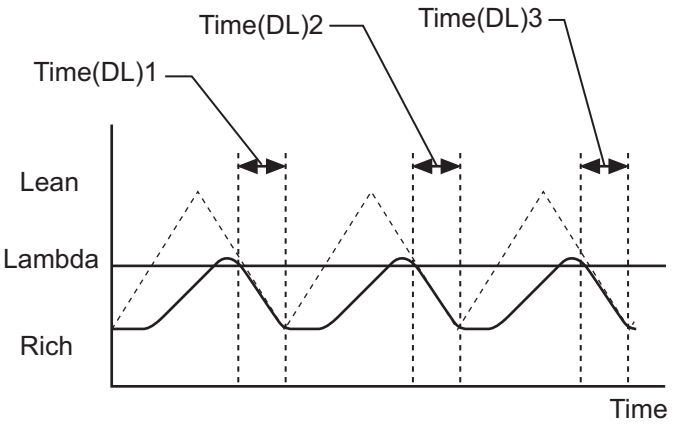

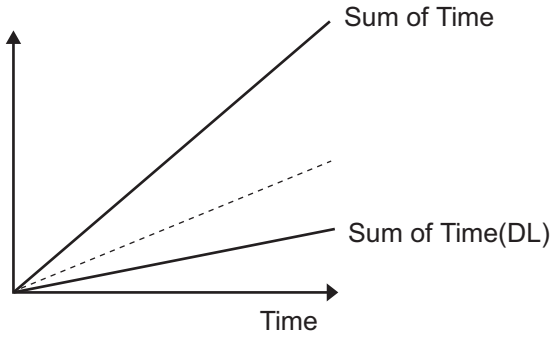

Normal: Sum of Time(DL) / Sum of Time = Approx. 0.5

Malfunction: Sum of Time(DL) / Sum of Time = Less than 0.39

P014D:

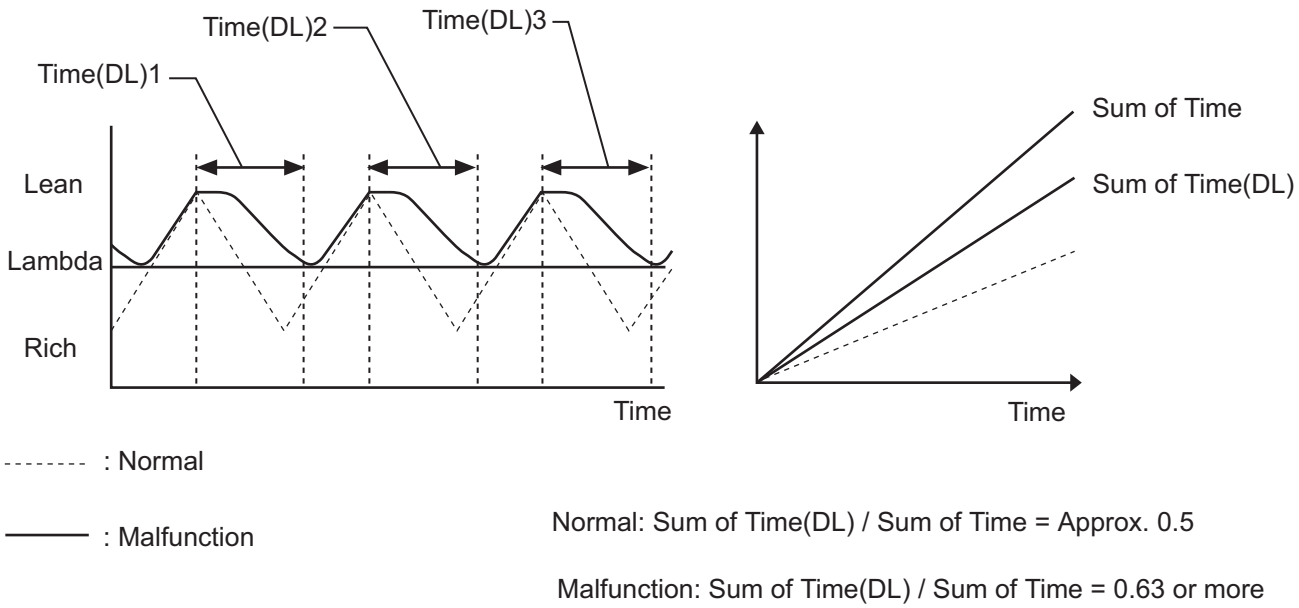

P014C, P014D (symmetric delay response)

The ECM monitors amount of change in the air/fuel ratio sensor output at specified intervals, and if the sum of the amounts of change exceeds the specified value, P014C and P014D are recorded.

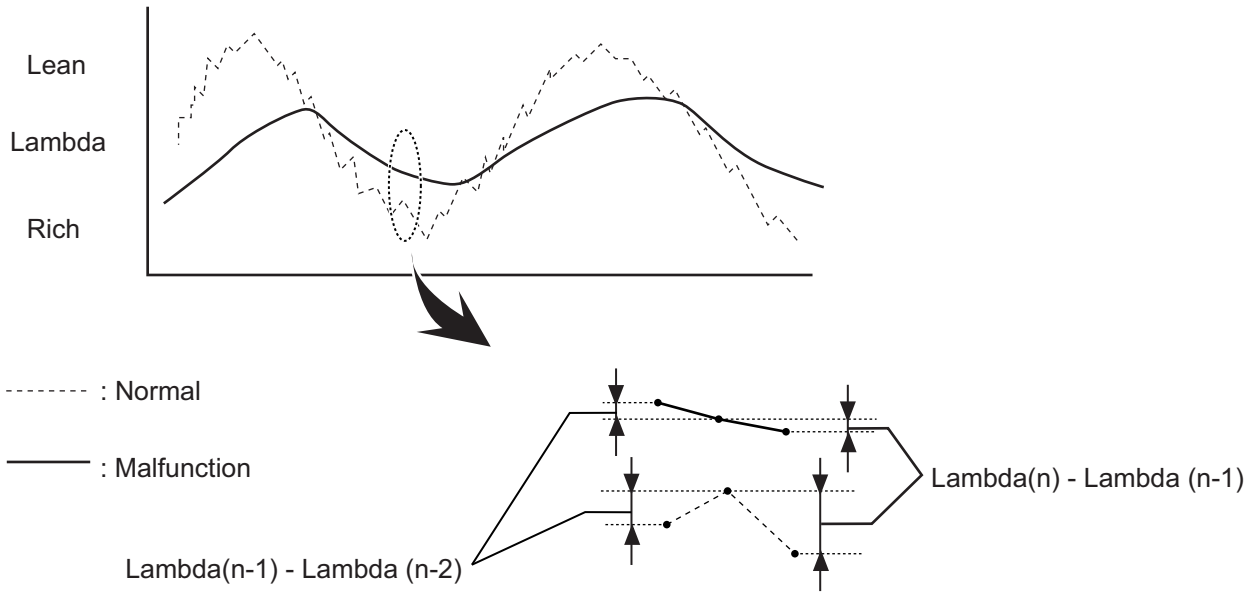

P015A, P015B (asymmetric delay response)

The ECM monitors the time the air/fuel ratio sensor output waveform is at its maximum and minimum values as time (m) and time (n).

If the difference between the average value of time (m) and the average value of time (n) reaches or exceeds the specified value, and time (m) reaches or exceeds the specified value, P015A is recorded. If time (n) reaches or exceeds the specified value, P015B is recorded.

ES

P015A:

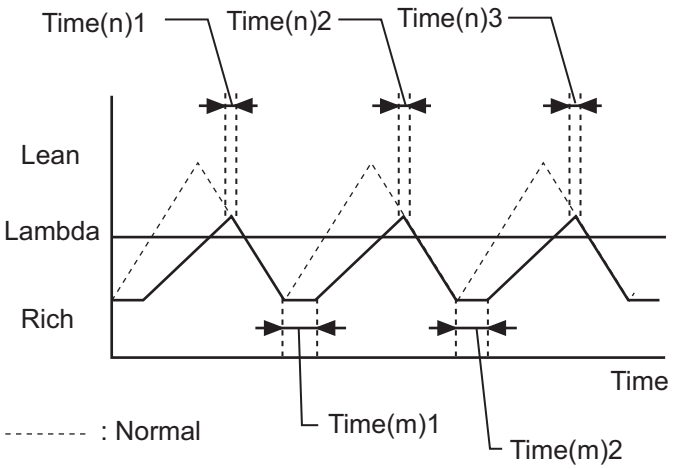

n: Local Maximum

m: Local Minimum

Average of Time(n) = (Time(n)1 + Time(n)2 + ···· / Number of Peaks

Average of Time(m) = (Time(m)1 + Time(m)2 + ···· / Number of Peaks

Malfunction: Average of Time(m) - Average of Time(n) = 0.25 seconds or more

P015B:

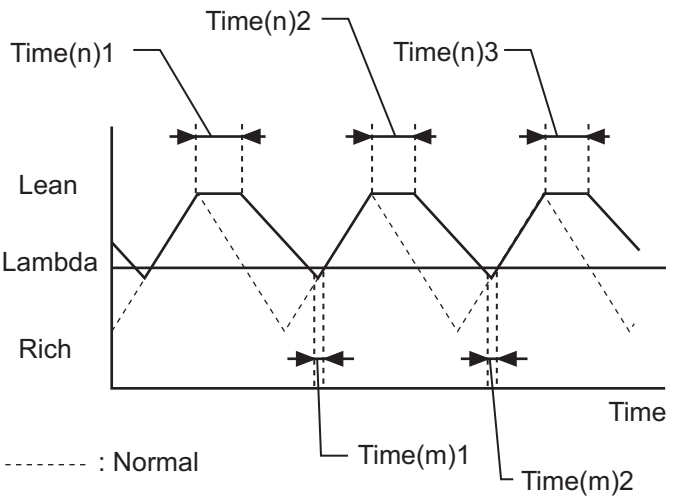

n: Local Maximum

m: Local Minimum

Average of Time(n) = (Time(n)1 + Time(n)2 + ···· / Number of Peaks

Average of Time(m) = (Time(m)1 + Time(m)2 + ···· / Number of Peaks

Malfunction: Average of Time(n) - Average of Time(m) = 0.25 seconds or more

P015A, P015B (symmetric delay response)

If the average value of the maximum and minimum values of lambda reaches or exceeds the specified value, both P015A and P015B are recorded.

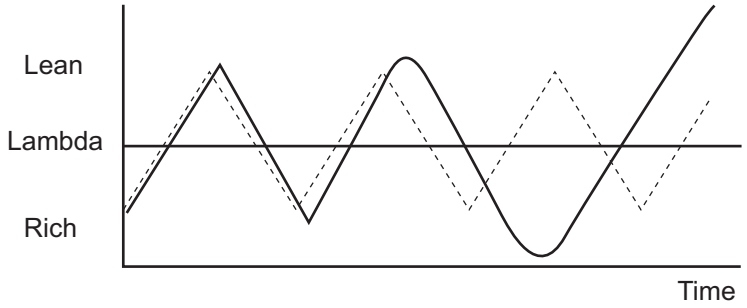

--------: Normal

———: Malfunction

Malfunction: Average (Lambda max - Lambda minimum) = 0.08 or more

Monitor strategy

Related DTCs	P014C: Primary oxygen sensor response (Asymmetric slow response Rich to Lean) P014D: Primary oxygen sensor response (Asymmetric slow response Lean to Rich) P014C and P014D: Primary oxygen sensor response (Symmetric slow response) P015A: Primary oxygen sensor response (Asymmetric delayed start Rich to Lean) P015B: Primary oxygen sensor response (Asymmetric delayed start Lean to Rich) P015A and P015B: Primary oxygen sensor response (Symmetric delayed start)
Required Sensors/Components (Main)	Air / fuel ratio sensor
Required Sensors/Components (Related)	Vehicle speed sensor, crankshaft position sensor
Frequency of Operation	Once per driving cycle
Duration	90 seconds
MIL Operation	2 operation cycle
Sequence of Operation	None

TYPICAL ENABLING CONDITIONS

Overlap prohibited DTC	None
Battery Voltage	10.9V or more
Atmospheric pressure	75.06 kPa {563.1 mmHg, 22.2 inHg} or more
Engine speed	1000 RPM or more
Intake amount per second	10g/s or more
F/B operation condition = Closed loop	3 seconds or more

TYPICAL MALFUNCTION THRESHOLDS

P014C (asymmetric delay response)

DL (reduction λtime) total / total for the total time	Less than 0.42 degree
Average time (minimum value) - average time (maximum value)	More than 0.1 seconds

P014D (asymmetric delay response)

DL (reduction λtime) total / total for the total time	More than 0.54
Average time (maximum value) - average time (minimum value)	More than 0.06 seconds

P014C, P014D (symmetric delay response)

λ Total ({(λ - λ(n-1))} - {λ (n-1) - λ(n-2)})	Less than 2.5 seconds (varies depending on the cumulative value of λ-variation)

P015A (asymmetric delay response)

Average time (minimum value)	More than 0.18 seconds
Average time (minimum value) - average time (maximum value)	More than 0.23 seconds

P015B (asymmetric delay response)

Average time (maximum value)	More than 0.2 seconds
Average time (maximum value) - average time (minimum value)	More than 0.3 seconds

P015A, P015B (Symmetric delayed start)

(maximum λ- minimum λ) average	More than 0.06

Monitoring result

Refer to [Monitor Status Check] (Refer to ES - 24)

Circuit figure

For a circuit figure, refer to ES - 131.

Description of functions

Test drive

Perform test drive to check if the DTC recurs.

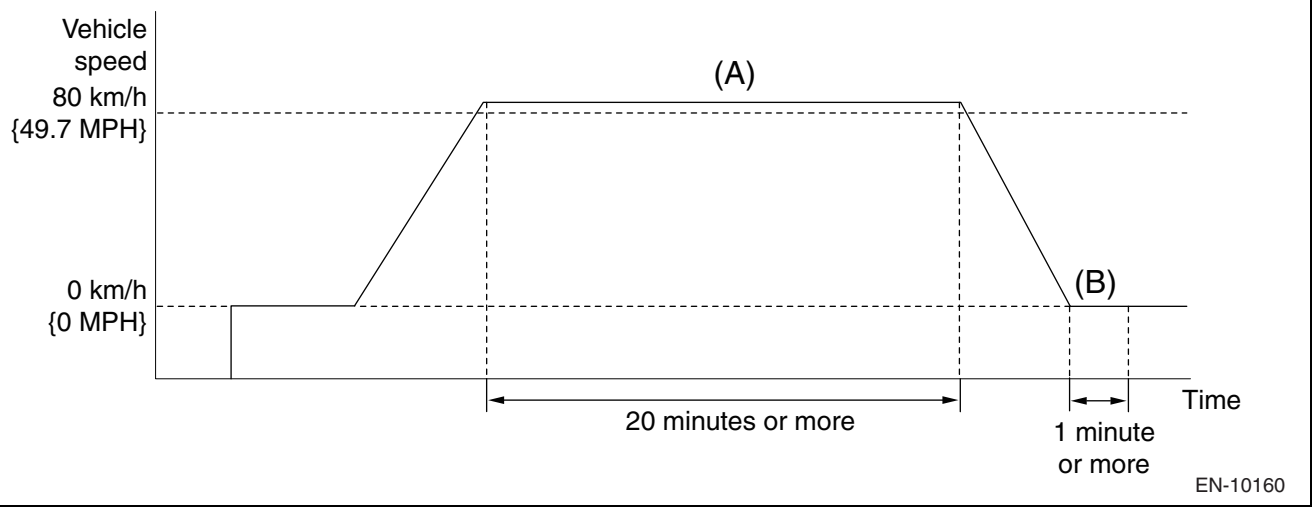

1. Connect the SSM4 to the DLC3.
2. Turn the ignition switch to ON.
3. Turn on the SSM4.

4. Follow the SSM4 on-screen instructions to clear the DTCs. (Refer to ES - 28)
5. Turn the ignition switch to OFF, and wait for 30 seconds.
6. Turn the ignition switch to ON.
7. Turn on the SSM4.
8. Start the engine and let it warm up until the engine coolant temperature stabilizes. (at 75°C {167°F} or more).
9. Perform driving test as follows.
   WARNING:
   When performing this driving test, always observe the applicable traffic laws such as the speed limit.
   (a) Drive at 80 km/h {49.7 MPH} or more for 20 minutes or more. (A)
   (b) Stop the vehicle.
   (c) Idle the engine for 1 minute or more. (B)
10. Follow the SSM4 on-screen instructions to check the DTC. (Refer to ES - 28)

Inspection steps
NOTE:
Read the freeze frame data using the SSM4. A part of the engine running conditions under which the engine trouble occurred is recorded in the freeze frame data, which is useful for troubleshooting.

1	Read DTC

(1) Connect the SSM4 to the DLC3.
(2) Turn the ignition switch to ON.
(3) Turn on the SSM4.
(4) Perform test drive. (Refer to "Test drive" under "Description of functions")
   WARNING:
   When performing this driving test, always observe the applicable traffic laws such as the speed limit.
(5) Follow the SSM4 on-screen instructions to check the DTC. (Refer to ES - 28)

Result

Result	Go to
DTC P014C, P014D, P015A, or P015B is output.	A
DTCs other than DTC P014C, P014D, P015A, or P015B are also output	B

NOTE:
If any DTCs other than P014C, P014D, P015A, P015B are output, troubleshoot them first.

B → To corresponding DTC chart (refer to ES - 12)

A

2	Unit inspection of the air/fuel ratio sensor (heater resistance)

(1) Perform a unit inspection on the air/fuel ratio sensor. (Refer to ES - 708)

NG → Replacement of the air/fuel ratio sensor (Refer to ES - 707)

OK

3	Inspection of wiring harnesses and connectors (air/fuel ratio sensor - ECM) (Refer to ES - 131)

NG → Repair or replacement of harnesses or connectors (air/fuel ratio sensor - ECM)

OK

ES

4	Inspection of air/fuel ratio sensor

(1) Check that the air/fuel ratio sensor is correctly installed on the vehicle.

NG → Replacement of the air/fuel ratio sensor (Refer to ES - 707)

OK

5	Performing a test drive

(1) Drive the vehicle according to [Test drive].

Next

6	Read DTC

(1) Connect the SSM4 to the DLC3.
(2) Turn the ignition switch to ON.
(3) Turn on the SSM4.
(4) Perform test drive. (Refer to "Test drive" under "Description of functions")
WARNING:
When performing this driving test, always observe the applicable traffic laws such as the speed limit.
(5) Follow the SSM4 on-screen instructions to check the DTC. (Refer to ES - 28)

Result

Result	Go to
DTC P014C, P014D, P015A, or P015B is output.	A
No DTC is output	B

B → Inspection for problems that do not normally occur (Refer to ES - 28)

A

7	Replacement of the air/fuel ratio sensor

(1) Replace the air/fuel ratio sensor. (Refer to ES - 707)

NEXT

8	Performing a test drive

(1) Drive the vehicle according to [Test drive].

NEXT

9	Read DTC

(1) Connect the SSM4 to the DLC3.
(2) Turn the ignition switch to ON.
(3) Turn on the SSM4.
(4) Perform test drive. (Refer to "Test drive" under "Description of functions")
WARNING:
When performing this driving test, always observe the applicable traffic laws such as the speed limit.
(5) Follow the SSM4 on-screen instructions to check the DTC. (Refer to ES - 28)

ES

Result

Result	Go to
No DTC is output	A
DTC P014C, P014D, P015A, or P015B is output.	B

B → Engine inspection due to the actual A/F ratio being extremely rich or lean (Refer to ES - 538)

A

Complete

DTC	P0171	System too Lean (Bank 1)
DTC	P0172	System too Rich (Bank 1)
DTC	P1170	Fuel System Abnormal (Port)
DTC	P117B	Fuel System Abnormal (Di)

Circuit description

They are detected when the fuel correction amount from the catalyst upstream air/fuel ratio sensor exceeds a certain value.
There are 2 types of air/fuel ratio correction: air/fuel ratio correction during normal driving (hereafter called F/B correction) and air/fuel ratio correction under recorded driving conditions (hereafter called F/B learning).
The F/B correction is a type of fuel correction used to maintain a stoichiometric air-fuel ratio. When the engine control computer receives a signal from the air/fuel ratio sensor which indicates that the actual air/fuel mixture has more fuel (hereafter called rich) or less fuel (hereafter called lean) compared to the stoichiometric air-fuel ratio, the engine control computer decreases the fuel injection amount if rich, and increases it if lean.
The F/B learning is a type of control that changes when F/B correction is performed for a specific duration, based on individual engine differences (caused by aging, change in usage environment, etc.), in order to bring the F/B correction closer to the zero region.

ES

DTC No.	DTC detection condition	Suspected parts
P0171	After the engine is warmed up, when the air/fuel ratio feedback has stabilized, the fuel correction becomes extremely rich. (2 trips detection logic)	• Intake system • Fuel injector ASSY (port injection) • Fuel injector ASSY (cylinder injection) • Intake air flow meter SUB-ASSY • E.F.I. water temperature sensor • Fuel pressure • Gas leakage from exhaust system • Open/short circuits in the air/fuel ratio sensor • Air / fuel ratio sensor • PCV valve and hose • PCV hose connection • ECM • Wiring harness or connector
P0172	After the engine is warmed up, when the air/fuel ratio feedback has stabilized, the fuel correction becomes extremely lean. (2 trips detection logic)	• Intake air flow meter SUB-ASSY • E.F.I. water temperature sensor • Fuel injector ASSY (port injection) • Fuel injector ASSY (cylinder injection) • Ignition system • Fuel pressure • Gas leakage from exhaust system • Open/short circuits in the air/fuel ratio sensor • Air / fuel ratio sensor • ECM • Wiring harness or connector
P1170	Regardless of whether a DTC for a rich status or a lean status is recorded, the fuel correction amount during direct injection is normal for 9 seconds. (1 trips detection logic)	• Fuel injector ASSY (port injection) • Fuel pressure • ECM
P117B	DTC for a rich status or a lean status is recorded, and the fuel correction amount during port injection is normal for 9 seconds. (1 trips detection logic)	• Fuel injector ASSY (cylinder injection) • Fuel pressure • ECM

1. Confirming the changing pattern of the fuel correction amount (sum of F/B correction amount and F/B learning values)
   (1) When idling or racing the engine (approx. 2500 r/min), or when the check engine light turns on while driving the vehicle, reproduce the engine load in the freeze frame data by driving the vehicle, then use the SSM4 to check the fuel correction amount data, and analyze the trouble.

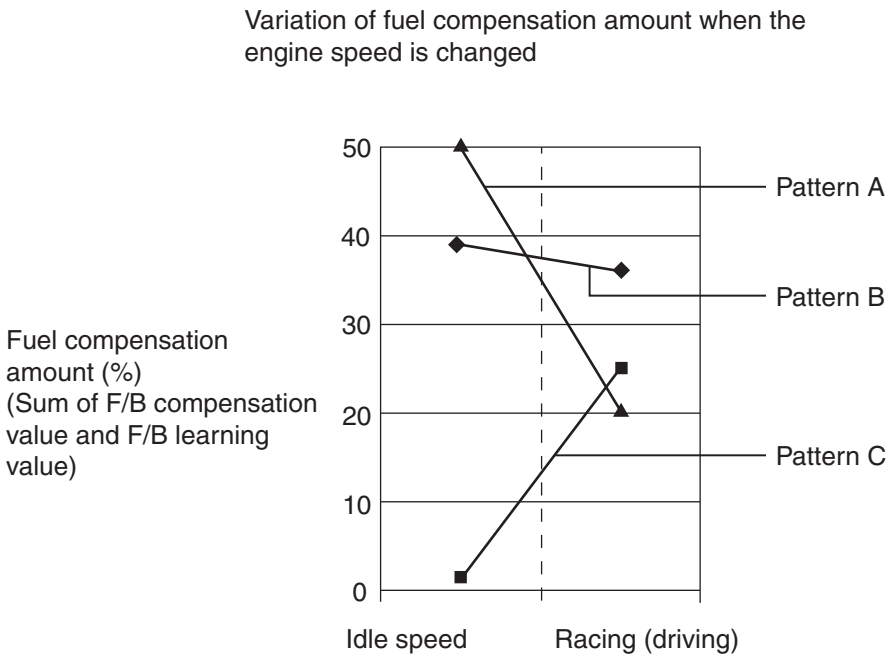

N

Result

Result	Inspection items
Pattern A (air induction) Air induction takes a larger fuel correction amount when the engine is idling and the amount decreases when the engine is racing. This is because racing the engine increases the amount of air necessary, and the ratio of problems in air induction relatively decreases.	Intake system
Pattern B (trouble in the intake air flow meter SUB-ASSY or a clog in the injector ASSY) Symptoms of trouble in the intake air flow meter SUB-ASSY or a clog in the fuel injector ASSY are very similar; the fuel correction amount is very large during both idling and racing.	• Intake air flow meter SUB-ASSY • Fuel injector ASSY (cylinder and port injection sides)
Pattern C (trouble in the intake air flow meter SUB-ASSY) Increase in the fuel correction amount when the engine is racing is significantly larger than when idling. This occurs because it is a unique fault that is different from the pattern B trouble in the intake air flow meter SUB-ASSY.	Intake air flow meter SUB-ASSY

(2) After checking the data of the changing pattern, perform the procedures in steps 4 and 5 to check the vehicle trouble phenomenon when a malfunction occurred.

MONITOR DESCRIPTION

When controlling the fuel amount in a closed loop, if the amount of fuel injection differs from the ECM estimated value, it can cause fluctuation in the long-term fuel correction. If there is no change in the deviation of the F/B correction value, long-term fuel correction is regulated. A deviation in the estimated fuel injection amount by the ECM can also effect the average fuel correction learning value, which is a sum of the short-term fuel correction average (F/B correction value) and the long-term fuel correction average (F/B learning value). If the fuel correction learning value average exceeds the malfunction threshold, the ECM determines this to be a malfunction in the fuel system, and the DTC is recorded.

Monitor strategy

Related DTCs	P0171: Fuel system main feedback control functional check (System too lean) P0172: Fuel system main feedback control functional check (System too rich) P1170: Fuel system main feedback control functional check (Direct injection fail) P117B: Fuel system main feedback control functional check (Portinjection fail)
Required Sensors/Components (Main)	Fuel system
Required Sensors/Components (Related)	Air/fuel ratio sensor, intake air flow meter SUB-ASSY, crankshaft position sensor
Frequency of Operation	Continuous
Duration	9 seconds ×3 times: P0171 and P0172 9 seconds: P1170 and P117B
MIL Operation	2 driving cycles: P0171 and P0172 Immediately after: P1170 and P117B
Sequence of Operation	None

TYPICAL ENABLING CONDITIONS

All

Overlap prohibited DTC	P0030 (air/fuel ratio sensor - heater) P0037, P0038 (oxygen sensor - heater) P0068, P0107, P0108 (Vacuum (MAP) sensor) P0102, P0103 (intake air flow (MAF) meter) P0111, P0112, P0113 (Intake Air Temperature (IAT) sensor) P0117, P0118 (engine coolant temperature (ECT) sensor) P0122, P0123, P0222, P0223 (Throttle position sensor) P0137, P0138 (oxygen sensor - lack of continuity in circuit) P0300, P0301, P0302, P0303, P0304 (misfire) P0458, P0459 (Solenoid bulb for the purge control) P0604, P0605 (ECM ROM) P1160 (throttle return spring) P2101, P2102 (Throttle actuator control motor) P2109 (Throttle position sensor minimum stop) P2119 (Throttle actuator control) P2122, P2123, P2127, P2128 (Accelerator Pedal Position Sensor (APPS) circuit) P2135 (Throttle position sensor (TPS) degree of correlation) P2138 (Accelerator pedal position sensor (APPS) degree of correlation) P2195, P2196 (air/fuel ratio sensor - output voltage)

P0171, P0172

F/B operation condition	Closed loop
Oil dilution	Unspecified

P1170

Diagnosis A	
Detecting conditions for the P0171 malfunction detection	Satisfied
P0171 malfunction	Detected
Direct injection ratio	100%
Diagnosis B	
Detecting conditions for the P0172 malfunction detection	Satisfied
P0172 malfunction	Detected

Direct injection ratio	100%

P117B

Diagnosis A	
Detecting conditions for the P0171 malfunction detection	Satisfied
P0171 malfunction	Detected
Port injection ratio	100%
Diagnosis B	
Detecting conditions for the P0172 malfunction detection	Satisfied
P0172 malfunction	Detected
Port injection ratio	100%

TYPICAL MALFUNCTION THRESHOLDS

P0171

Diagnostic value (air/fuel ratio sensor short-term fuel correction + air/fuel ratio sensor long-term fuel correction + (measured λ- target λ))	1.35 or more

P0172

Diagnostic value (air/fuel ratio sensor short-term fuel correction + air/fuel ratio sensor long-term fuel correction + (measured λ- target λ))	Less than 0.65 (varies depending on increase of the engine warm-up correction)

P1170

Diagnosis A	
Diagnostic value (air/fuel ratio sensor short-term fuel correction + air/fuel ratio sensor long-term fuel correction + (measured λ- target λ))	Less than 1.15 (varies depending on increase of the engine warm-up correction)
Diagnosis B	
Diagnostic value (air/fuel ratio sensor short-term fuel correction + air/fuel ratio sensor long-term fuel correction + (measured λ- target λ))	0.85 or more (varies depending on increase of the engine warm-up correction)

P117B

Diagnosis A	
Diagnostic value (air/fuel ratio sensor short-term fuel correction + air/fuel ratio sensor long-term fuel correction + (measured λ- target λ))	Less than 1.15 (varies depending on increase of the engine warm-up correction)
Diagnosis B	
Diagnostic value (air/fuel ratio sensor short-term fuel correction + air/fuel ratio sensor long-term fuel correction + (measured λ- target λ))	0.85 or more (varies depending on increase of the engine warm-up correction)

Circuit figure

For circuit figure, refer to ES - 134.
For circuit figure, refer to ES - 169.

Description of functions

NOTE:

- When DTC P0171 is recorded, the actual air/fuel ratio is on the leaner side.
- When DTC P0172 is recorded, the actual air/fuel ratio is on the richer side.
- If the vehicle runs out of gas, the fuel correction amount is corrected to the increase side, and P0171 (lean malfunction) may be output.
- When DTC P1170 or P117B is output, in some cases it is not possible to accurately determine if the port injection side or the cylinder injection side is faulty. In this case, perform [Active Test] to determine if the injection system is faulty.

Test drive

Perform test drive to check if the DTC recurs.

NOTE:

Both of test drive A and B can recur the diagnostic code.

Test drive A

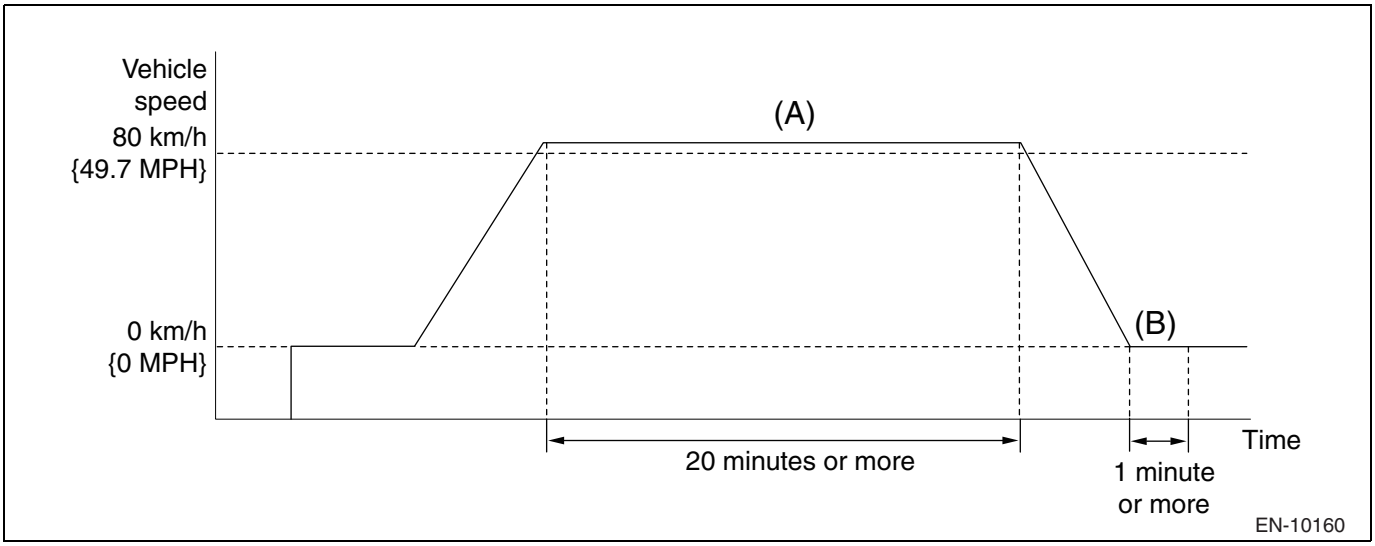

1. Connect the SSM4 to the DLC3.
2. Turn the ignition switch to ON.
3. Turn on the SSM4.
4. Follow the SSM4 on-screen instructions to clear the DTCs. (Refer to ES - 28)
5. Turn the ignition switch to OFF, and wait for 30 seconds.
6. Turn the ignition switch to ON.
7. Turn on the SSM4.
8. Start the engine and let it warm up until the engine coolant temperature stabilizes. (at 75°C {167°F} or more).
9. Perform driving test as follows.
   WARNING:
   When performing this driving test, always observe the applicable traffic laws such as the speed limit.
   (a) Drive at 80 km/h {49.7 MPH} or more for 20 minutes or more. (A)
   (b) Stop the vehicle.
   (c) Idle the engine for 1 minute or more. (B)
10. Follow the SSM4 on-screen instructions to check the DTC. (Refer to ES - 28)

Test drive B

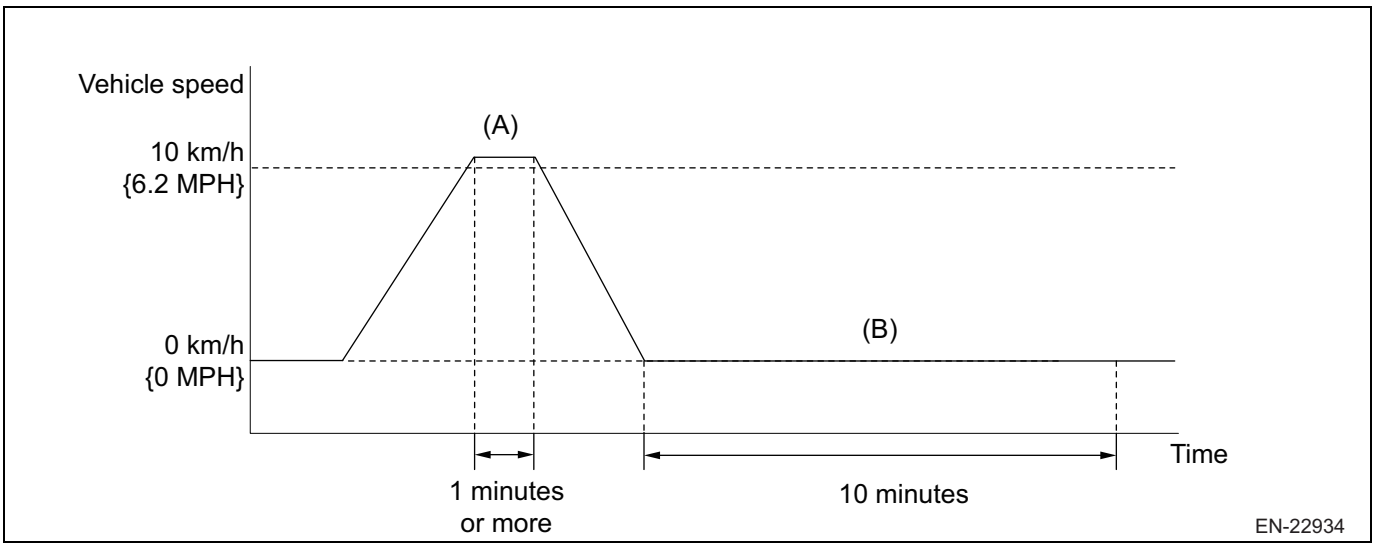

1. Connect the SSM4 to the DLC3.
2. Turn the ignition switch to ON.

3. Turn on the SSM4.
4. Follow the SSM4 on-screen instructions to clear the DTCs. (Refer to ES - 28)
5. Turn the ignition switch to OFF, and wait for 30 seconds.
6. Turn the ignition switch to ON.
7. Turn on the SSM4.
8. Start the engine.
9. Perform driving test as follows.
   WARNING:
   When performing this driving test, always observe the applicable traffic laws such as the speed limit.
   (a) Drive at 10 km/h {6.2 MPH} or more for 1 minute or more. (A)
   (b) Stop the vehicle.
   (c) Idle the engine for 10 minutes or more. (B)
10. Follow the SSM4 on-screen instructions to check the DTC. (Refer to ES - 28)

Inspection steps

NOTE:

- Read the freeze frame data using the SSM4. A part of the engine running conditions under which the engine trouble occurred is recorded in the freeze frame data, which is useful for troubleshooting. If the [Coolant Temp.] in the freeze frame data is less than 65°C {149°F} during idling, malfunction may exist in the fuel injector ASSY (port injection side) system.
- After repairing or replacing the faulty part, use the SSM4 to perform [Injection Mode Change/Cylinder injection or Port injection] in the [Active Test], and inspect if [Short term fuel trim B1] and [Long term fuel trim B1] under [Data monitor] are normal.

Standard value

Item name	Inspection conditions	Standard value
Sum of [Short term fuel trim B1] and [Long term fuel trim B1]	Engine is idling or racing (test drive the vehicle as required)	Within ±20%

- If the trouble occurred when driving at high-speeds, shift the gear down and match the amount of air intake to the amount when the trouble occurred. Doing so enables measurement at moderate or low speeds.
- When short trips (driving time (distance) from IG ON to OFF is short) are repeated and then engine is warmed up, P0172 may be output due to an increase in blow-by gas caused by fuel evaporation.

WARNING:
When performing this driving test, always observe the applicable traffic laws such as the speed limit.

1	Interview

(1) Refer to the check list for the interview. (Refer to ES - 26)

Next

2	Read DTC

(1) Connect the SSM4 to the DLC3.
(2) Turn the ignition switch to ON.
(3) Perform test drive. (Refer to "Test drive" under "Description of functions")
(4) Follow the SSM4 on-screen instructions to check the DTCs. (Refer to ES - 28)
   CAUTION:
   If DTCs related to open or short circuits in the sensor system are output, perform the related troubleshooting.

Result

Result	Go to
P0171, P0172, P1170, or P117B is output.	A
DTCs other than P0171, P0172, P1170, or P117B are also output.	B

NOTE:
If any DTCs other than P0171, P0172, P1170, or P117B are output, troubleshoot them first.

B → To corresponding DTC chart (refer to ES - 12)

A

3	Performing of SSM4 [Active Test] ([Cylinder Fuel Rate])

ES

(1) Connect the SSM4 to the DLC3.
(2) Start the engine.
(3) Run the engine at 2500 r/min for approximately 90 seconds to warm it up.
(4) Select the following menu items using the SSM4. : [Each System] / [Engine Control System] / [Work Support] / [Active Test] / [Cylinder Fuel Rate]
(5) Inspect [A/F Sensor #11] and [Oxygen sensor #12] of the data display when running [Active Test].
CAUTION:
- The output voltage for the air/fuel ratio sensor is delayed a few seconds, while the output voltage for the oxygen sensor is delayed for a maximum of approximately 20 seconds.
- Because the sensors become cold, measure the voltage promptly after warming up the sensors.

NOTE:
- Change fuel injection volume from -12 % to +12 %.
- If the air/fuel ratio sensor output shows little response, the air/fuel ratio sensor may be at fault.

Voltage

Item name	Fuel injection volume	Output voltage of air/fuel ratio sensor and oxygen sensor
A/F Sensor #11	+12 % increase	Less than 2.0 V (rich state)
	-12 % decrease	2.4 V or more (lean state)
Oxygen sensor #12	+12 % increase	0.55 V or more (rich state)
	-12 % decrease	Less than 0.4 V (lean state)

Result

A/F Sensor #11	Oxygen sensor #12	State of air/fuel ratio, air/fuel ratio sensor, and oxygen sensor	Inspection parts	Go to
Rich/Lean	Rich/Lean	Normal	-	A
Lean	Lean	Lean state	• PCV hose connected • Fuel injector ASSY • Exhaust gas leakage • Intake system • Fuel pressure • Intake air flow meter SUB-ASSY • E.F.I. water temperature sensor	A

A/F Sensor #11	Oxygen sensor #12	State of air/fuel ratio, air/fuel ratio sensor, and oxygen sensor	Inspection parts	Go to
Rich	Rich	Rich state	• Fuel injector ASSY • Exhaust gas leakage • Ignition system • Fuel pressure • Intake air flow meter SUB-ASSY • E.F.I. water temperature sensor	A
Lean	Rich/Lean	Malfunction in the air/fuel ratio sensor	Air / fuel ratio sensor	B
Rich	Rich/Lean	Malfunction in the air/fuel ratio sensor	Air / fuel ratio sensor	B

- Lean status: When the active test is performed, the output voltage of the air/fuel ratio is 2.4 V or more, and the output voltage of the oxygen sensor remains at less than 0.4 V.
- Rich status: When the active test is performed, the output voltage of the air/fuel ratio sensor remains at less than 2.0 V, and the output voltage of the oxygen sensor remains at 0.55 V or more.
- Rich/lean status: When the active test is performed, the output voltage of the air/fuel ratio sensor and oxygen sensor are normal.
- For details of [A/F Sensor #11] and [Oxygen sensor #12] data monitor menus, check “Data monitor / Active test”. (Refer to ES - 43)

B → Go to Step 18.

A

4	Checking the freeze frame data

CAUTION:
Make sure to write down the freeze frame data because it is deleted when DTCs are cleared.

(1) Check the check list for interview and freeze frame data to understand the status of the vehicle when the malfunction occurred.
NOTE:
- With the time-line freeze data, the state of the engine before and after the detection of the DTCs can be checked.
- Check states during idling (gear in the D, P, or N position) and driving (at constant speed or accelerating and decelerating) from the freeze frame data.

Items to check

Engine Speed	Fuel system for Bank 1	Oxygen sensor #12
Calculated load value	Short term fuel trim B1	Purge ratio
Vehicle speed	Long term fuel trim B1	Gear signal
Mass air flow	A/F Sensor #11	Coolant Temp.

Next

5	Check trouble phenomenon

NOTE:
Perform the following procedures to check the vehicle trouble phenomenon when a malfunction occurred.

(1) Remove the EFI (+B) fuse, wait for 60 seconds or more, then connect the fuse.
NOTE:
- Clear the F/B learning value from the engine control computer.
- Initial diagnosis of electronic control throttle is performed after DTCs are cleared. For this reason, the engine starting after DTC clearance must be performed more than 10 seconds after IG ON.

(2) Connect the SSM4 to the DLC3.
(3) Select the following menu items using the SSM4. : [Each System] / [Engine Control System] / [Work Support] / [Active Test] / [Cylinder Fuel Rate]
(4) Advance the injection amount 1 step to the increase side or the reduce side.
NOTE:
This operation stops the F/B correction and F/B learning so that the trouble phenomenon can be checked.
(5) Start the engine.
(6) Refer to the driving status in the freeze frame data, reproduce the conditions when the malfunction occurred, and check the trouble phenomenon.

Result

Result	Go to
The trouble phenomenon can be checked.	A
The trouble phenomenon cannot be checked.	B

B → Go to Step 10.

A

6	Check trouble phenomenon

(1) Refer to the vehicle trouble phenomenon shown below to identify faulty part, and inspect and replace parts.
CAUTION:
If the faulty part cannot be identified with only the check light, go to Step 3.

Faulty part	Trouble phenomenon	Cause	Inspection procedures	Remarks
Intake air flow meter SUB-ASSY	• Rough idling • Hesitation at start up • Only the check light	Uncharacteristic intake air flow meter SUB-ASSY	Refer to ES - 676	-

Faulty part	Trouble phenomenon	Cause	Inspection procedures	Remarks
Fuel injector ASSY (cylinder or port injection sides)	Only the check light	Clog in the fuel injector ASSY	• For inspection procedures on the port injection side, refer to FU - 29. • For inspection procedures on the direct injection side, refer to FU - 39.	• Extremely long idling • Long driving distance • Regular gasoline being used for a long period of time Using the vehicle under the above conditions may cause a clog in the fuel injector ASSY. The check light turns on many times when driving.
	• Engine stalls when stopping the vehicle (can be restarted) • Only the check light	Poor oil-tightness in the fuel injector ASSY	• For inspection procedures on the port injection side, refer to FU - 29. • For inspection procedures on the direct injection side, refer to FU - 39.	• Poor oil-tightness causes rich malfunctions. • If the HC concentration inside the intake manifold after stopping the engine is high, it will cause a rich malfunction. • The smoldering state of the spark plug may indicate a malfunction in the fuel system. • DTC P0088 may be output.
Fuel pump (low-pressure side)	• Engine stalls • Poor acceleration	• Fuel pump (low-pressure side) operates poorly • Poor fuel pressure on the low-pressure side • Clog in the low-pressure side fuel system	• For the fuel pump control system (low-pressure side), refer to ES - 602. • For the fuel pressure inspection on the low-pressure side, refer to FU - 9.	-
Intake system	• Rough idling • Only the check light	Air intake from the intake manifold gasket area	Inspection of the intake manifold gasket area.	-
		• Damage to the intake system hoses • Vacuum switching valve ASSY is continuously ON.	Start the engine and, while idling, block the hoses connected to the intake manifold 1 at a time, and inspect if the fuel correction amount (sum of F/B correction and F/B learning) changes to the reduce side.	If there is air intake from the hoses, the fuel correction amount (sum of F/B correction and F/B learning) is large but becomes small when the engine is raced.

Faulty part	Trouble phenomenon	Cause	Inspection procedures	Remarks
Air / fuel ratio sensor	Rough idling	Air/fuel ratio sensor is faulty	For the inspection of the air/fuel ratio sensor system, refer to ES - 205.	DTCs for the air/fuel ratio sensor system may be output.

(2) After repairing the faulty part, check if the vehicle trouble phenomenon has been resolved.

Result

ES

Result	Go to
Vehicle trouble phenomenon is resolved.	A
Vehicle trouble phenomenon is not resolved.	B

B → Go to Step 10.

A

7	Clear DTC

(1) Connect the SSM4 to the DLC3.
(2) Turn the ignition switch to ON, and follow the SSM4 on-screen display to clear the DTC. (Refer to ES - 28)

Next

8	Reading of SSM4 data ([Short term fuel trim B1] and [Long term fuel trim B1])

(1) Start the engine.
(2) Select the following menu items using the SSM4. : [Each System] / [Engine Control System] / [Data monitor] / [Short term fuel trim B1], [Long term fuel trim B1]
(3) Read [Short term fuel trim B1] and [Long term fuel trim B1] displayed on the SSM4.

Standard value

Item name	Inspection conditions	Standard value
Sum of [Short term fuel trim B1] and [Long term fuel trim B1]	Vehicle conditions when malfunction occurs (during idling, test drive, etc.)	Within ±20%

NOTE:
If the trouble occurred when driving at high-speeds, shift the gear down and match the amount of air intake to the amount when the trouble occurred. Doing so enables measurement at moderate or low speeds.

NG → Go to Step 10.

OK

9	System normal

(1) Check the check list for interview and freeze frame data again, and if there is no malfunction, finish the procedure.
NOTE:
- If the vehicle runs out of gas, the fuel correction amount becomes +35 % or more. When the condition occurs consecutively (2 trips), P0171 (lean malfunction) may be output.

- When short trips (driving time (distance) from IG ON to OFF is short) are repeated and then engine is warmed up, P0172 may be output due to an increase in blow-by gas caused by fuel evaporation.

Next

Complete

ES

10	Performing of SSM4 [Active Test] ([Injection Mode Change])

(1) Connect the SSM4 to the DLC3.
(2) Start the engine.
(3) Select the following menu items using the SSM4. : [Each System] / [Engine Control System] / [Work Support] / [Active Test] / [Injection Mode Change] / [Port injection]
(4) Check [Short term fuel trim B1] and [Long term fuel trim B1] data readings during [Active Test].

Standard value

Item name	Inspection conditions	Standard value
Sum of [Short term fuel trim B1] and [Long term fuel trim B1]	[Active Test] - [Injection Mode Change] - [Port injection] in progress Idling	Within ±20%

(5) Select the following menu items using the SSM4. : [Each System] / [Engine Control System] / [Work Support] / [Active Test] / [Injection Mode Change] / [Cylinder injection]
(6) Check [Short term fuel trim B1] and [Long term fuel trim B1] data readings during the active test.

Standard value

Item name	Inspection conditions	Standard value
Sum of [Short term fuel trim B1] and [Long term fuel trim B1]	[Active Test] - [Injection Mode Change] - [Cylinder injection] in progress Idling	Within ±20%

Result

Injection mode change Port injection	Injection mode change Direct injection	Go to
OK	OK	A
OK	NG	B
NG	OK	C
NG	NG	D

B → Go to Step 23.

C → Go to Step 27.

D → Go to Step 12.

A

11	System normal

(1) Check the check list for interview and freeze frame data again, and if there is no malfunction, finish the procedure.

NOTE:

- If the vehicle runs out of gas, the fuel correction amount becomes +35 % or more. When the condition occurs consecutively (2 trips), P0171 (lean malfunction) may be output.
- When short trips (driving time (distance) from IG ON to OFF is short) are repeated and then engine is warmed up, P0172 may be output due to an increase in blow-by gas caused by fuel evaporation.

Next

Complete

12	Emission control system inspection

(1) Inspect the emission control system. (Refer to EC - 3)

NG → Repair or replacement for the emission control system

OK

13	Intake system inspection

(1) Inspect the intake system. (Refer to IE - 4)

NG → Repair or replacement of intake system

OK

14	PCV valve inspection

(1) PCV valve inspection

(2) Check deformation, cracks and other damages of the PCV valve.

NG → Repair or replace the PCV valve. (Refer to EC - 21)

OK

15	Ventilation hose inspection

(1) Ventilation hose inspection

(2) Check deformation, cracks and other damages of the ventilation hose.

NG → Repair or replace the ventilation hose. (Refer to EC - 21)

OK

16	Unit inspection of the E.F.I. water temperature sensor

(1) Perform unit inspection of E.F.I. water temperature sensor. (Refer to ES - 696)

NG → Replacement of E.F.I. water temperature sensor (Refer to ES - 695)

OK

ES

17	Reading of SSM4 data ([Mass Air Flow])

(1) Connect the SSM4 to the DLC3.
(2) Turn the ignition switch to ON.
(3) Turn ON the main switch of the SSM4.
(4) Select the following menu items using the SSM4. : [Each System] / [Engine Control System] / [Data monitor] / [Mass Air Flow]
(5) Read the [Mass Air Flow] displayed on the SSM4.

Standard value

Item name	Inspection conditions	Standard value
[Mass Air Flow]	After the engine is warmed up, when running at 3000 r/min (Air conditioning OFF, shift lever in the N position)	8 to 13 g/s

NG → Go to Step 28.

OK

18	Ignition system inspection

(1) Inspect the ignition system. (Refer to ES - 652)

NG → Repair or replacement for the ignition system

OK

19	Exhaust gas leakage check

(1) Inspect places such as the exhaust manifold and the air/fuel sensor installation section for gas leaks from exhaust system.
Criteria: There is no exhaust gas leakage.

Result

Result	Go to
Malfunction	A
Normal	B

B → Go to Step 28.

A

Repair or replacement for the exhaust system

20	Unit inspection of the air/fuel ratio sensor

(1) Perform a unit inspection on the air/fuel ratio sensor. (Refer to ES - 708)

NG → Replacement of the air/fuel ratio sensor (Refer to ES - 707)

OK

ES

21	Check wiring harness and connector (engine control computer - air/fuel ratio sensor)

NOTE:
For the inspection procedure and precautions for wiring harnesses and connectors, refer to IN - 36.

(1) Disconnect the connector for the engine control computer.
(2) Disconnect the air/fuel ratio sensor connector.
(3) Measure the resistance between the terminals. (For terminal arrangement, refer to ES - 36.)

Resistance (open circuit check)

Inspection terminals	Inspection conditions	Standard value
A34-19 (A1A+) - C14-3 (A1A+)	Always	Less than 1 Ω
A34-18 (A1A-) - C14-4 (A1A-)	Always	Less than 1 Ω
A34-5 (HA1A) - C14-1 (HA1A)	Always	Less than 1 Ω

Resistance (short circuit check)

Inspection terminals	Inspection conditions	Standard value
A34-19 (A1A+) and C14-3 (A1A+) - other terminals and chassis ground	Always	10 k Ωor more
A34-18 (A1A-) and C14-4 (A1A-) - other terminals and chassis ground	Always	10 k Ωor more
A34-5 (HA1A) and C14-1 (HA1A) - other terminals and chassis ground	Always	10 k Ωor more

NG → Repair or replacement of wiring harness or connector

OK

22	Replacement of the air/fuel ratio sensor

(1) Replace the air/fuel ratio sensor. (Refer to ES - 707)

Next

23	Reading of SSM4 data (Short term fuel trim B1 and Long term fuel trim B1)

(1) Connect the SSM4 to the DLC3.
(2) Start the engine.
(3) Check DTC using SSM4.
(4) Check [Short term fuel trim B1] and [Long term fuel trim B1] displayed on the SSM4.

Standard value

Item name	Inspection conditions	Standard value
Sum of [Short term fuel trim B1] and [Long term fuel trim B1]	Engine is idling or racing (test drive the vehicle as required)	Within ±20%

NG → Go to Step 22.

OK

Complete

ES

24	Fuel pressure inspection (low-pressure side)

(1) Check the fuel pressure (low-pressure side). (Refer to FU - 9)

Result

Result	Go to
Malfunction	A
Normal	B

B → Go to Step 28.

A

Inspection of the fuel pump control system (Refer to ES - 602)

25	Reading of SSM4 data ([Fuel Rail Pressure])

(1) Connect the SSM4 to the DLC3.
(2) Start the engine.
(3) Select the following menu items using the SSM4. : [Each System] / [Engine Control System] / [Data monitor] / [Short term fuel trim B1], [Long term fuel trim B1]
(4) Inspect the [Fuel Rail Pressure] displayed on the SSM4.

Standard value

Item name	Inspection conditions	Standard value
[Fuel Rail Pressure]	During engine idling (after warm-up, air conditioning off, in N position)	3000 to 5000 kPa {22506 to 37509 mmHg, 886.0 to 1476.7 inHg, 435.0 to 725.0 psi}

NOTE:
If outside the standard value, there may be a malfunction in the fuel system (high-pressure side).

NG → Check and replacement for the fuel system (high-pressure side)

OK

26	Performing of SSM4 [Active Test] ([Injection Mode Change])

(1) Connect the SSM4 to the DLC3.

(2) Start the engine.
(3) Select the following menu items using the SSM4. : [Each System] / [Engine Control System] / [Work Support] / [Active Test] / [Injection Mode Change] / [Cylinder injection]
(4) Check [Target Fuel Pressure(High)], [Short term fuel trim B1] and [Long term fuel trim B1] data readings during the active test.

Result

Item name		Inspection conditions	Go to
[Target Fuel Pressure(High)]	Sum of [Short term fuel trim B1] and [Long term fuel trim B1]		
3000 to 5000 kPa {22506 to 37509 mmHg, 886.0 to 1476.7 inHg, 435.0 to 725.0 psi}	-	• [Active Test] - [Injection Mode Change] - [Cylinder injection] in progress • Idling • Shift lever is at N or P position • A/C OFF	A
5000 kPa {37509 mmHg, 1476.7 inHg, 725.0 psi} or more	+20% or more		B
	Less than -20%		C
Less than 3000 kPa {22506 mmHg, 886.0 inHg, 435.0 psi}	+20% or more		C
	Less than -20%		D

B → Go to Step 26.

C → Replacement of the fuel pressure sensor (Refer to FU - 41)

D → Replacement of the engine control computer (Refer to ES - 670)

A

27	Performing of SSM4 [Active Test] ([Injection Mode Change])

(1) Connect the SSM4 to the DLC3.
(2) Start the engine.
(3) Select the following menu items using the SSM4. : [Each System] / [Engine Control System] / [Work Support] / [Active Test] / [Injection Mode Change] / [Cylinder injection]
(4) Check [Target Fuel Pressure(High)], [Short term fuel trim B1] and [Long term fuel trim B1] data readings during the active test.

Result

Item name		Inspection conditions	Go to
[Target Fuel Pressure(High)]	Sum of [Short term fuel trim B1] and [Long term fuel trim B1]		
3000 to 5000 kPa {22506 to 37509 mmHg, 886.0 to 1476.7 inHg, 435.0 to 725.0 psi}	Less than -25%	• [Active Test] - [Injection Mode Change] - [Cylinder injection] in progress • Idling • Shift lever is at N or P position • A/C OFF	A
3000 to 5000 kPa {22506 to 37509 mmHg, 886.0 to 1476.7 inHg, 435.0 to 725.0 psi}	+30% or more		
3000 to 5000 kPa {22506 to 37509 mmHg, 886.0 to 1476.7 inHg, 435.0 to 725.0 psi}	-25 to +25%		B

B → Inspection for problems that do not normally occur (Refer to ES - 28)

A

Replacement of fuel injector ASSY (direct injection side) (Refer to FU - 31)

28	Inspection for fuel leaks (high-pressure side)

(1) Connect the SSM4 to the DLC3.
(2) Start the engine.
(3) Select the following menu items using the SSM4. : [Each System] / [Engine Control System] / [Data monitor] / [Fuel Rail Pressure]
  (a) Record the [Fuel Rail Pressure].
(4) Inspect for any fluctuation in the [Fuel Rail Pressure] when the engine is stopped.

Criteria

Item name	Inspection conditions	Criteria
[Fuel Rail Pressure]	Engine running →IG OFF →IG ON	Fluctuation in fuel pressure gradually decreases.

NOTE:
- After turning IG to OFF, immediately turn the ignition switch to ON.
- The pressure drops to 0 kPa in approximately 10 minutes.
- It may rise gradually after IG ON depending on vehicle conditions.

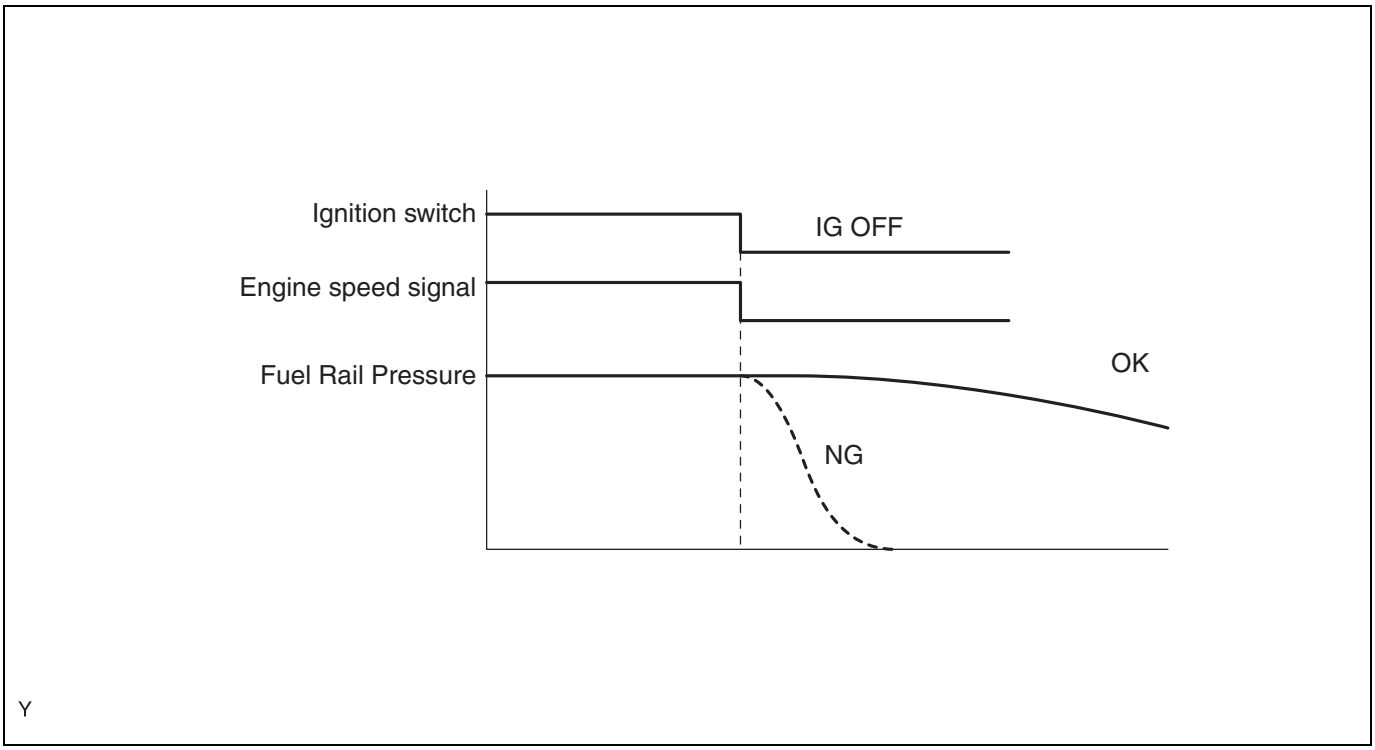

Result

Result	Go to
Fluctuation in fuel pressure increases or decreases gradually.	A
Fuel pressure decreases rapidly.	B

B → Replacement of the fuel pump ASSY (high-pressure side) (Refer to FU - 58)

A

Replacement of fuel injector ASSY (direct injection side) (Refer to FU - 31)

29	Fuel injector ASSY unit inspection (port injection side)

(1) Perform a unit inspection on the fuel injector ASSY (port injection side). (Refer to FU - 29)

NG → Replacement of the fuel injector ASSY (port injection side) (Refer to FU - 21)

OK

Replacement of the engine control computer (Refer to ES - 670)

30	Inspection of the wiring harness and the connector

(1) Check the connection state and fit of the wiring harnesses and connectors between the intake air flow meter SUB-ASSY and engine control computer. (Refer to IN - 36)

NOTE:
If there are poor connections or poor fits, replace or repair them.

Next

31	Clear DTC

(1) Connect the SSM4 to the DLC3.
(2) Turn the ignition switch to ON, and follow the SSM4 on-screen display to clear the DTC. (Refer to ES - 28)

Next

32	Reading of SSM4 data ([Short term fuel trim B1] and [Long term fuel trim B1])

(1) Start the engine.
(2) Select the following menu items using the SSM4. : [Each System] / [Engine Control System] / [Data monitor] / [Short term fuel trim B1], [Long term fuel trim B1]
(3) Check [Short term fuel trim B1] and [Long term fuel trim B1] displayed on the SSM4.

Standard value

Item name	Inspection conditions	Standard value
Sum of [Short term fuel trim B1] and [Long term fuel trim B1]	Vehicle conditions when malfunction occurs (during idling, test drive, etc.)	Within ±20%

NOTE:
If the trouble occurred when driving at high-speeds, shift the gear down and match the amount of air intake to the amount when the trouble occurred. Doing so enables measurement at moderate or low speeds.

NG → Go to Step 31.

OK

Complete

33	Check wiring harness and connector (engine control computer - intake air flow meter SUB-ASSY)

NOTE:
For the inspection procedure and precautions for wiring harnesses and connectors, refer to IN - 36.
(1) Disconnect the connector for the engine control computer.
(2) Disconnect the connector of the intake air flow meter SUB-ASSY.
(3) Measure the resistance between the terminals. (For terminal arrangement, refer to ES - 36.)

Resistance (open circuit check)

Inspection terminals	Inspection conditions	Standard value
A33-22 (VG) - C16-5 (VG)	Always	Less than 1 Ω
A33-29 (E2G) - C16-4 (E2G)	Always	Less than 1 Ω

Resistance (short circuit check)

Inspection terminals	Inspection conditions	Standard value
A33-22 (VG) and C16-5 (VG) - other terminals and chassis ground	Always	10 k Ωor more
A33-29 (E2G) and C16-4 (E2G) - other terminals and chassis ground	Always	10 k Ωor more

NG → Repair or replacement of wiring harness or connector

OK

ES

34 Replacement of the intake air flow meter SUB-ASSY

(1) Replace the intake air flow meter SUB-ASSY. (Refer to ES - 675)
NOTE:
If the inspection result in Step 15 is normal, proceed to the next step without replacing the intake air flow meter SUB-ASSY.

Next

35 Clear DTC

(1) Connect the SSM4 to the DLC3.
(2) Turn the ignition switch to ON, and follow the SSM4 on-screen display to clear the DTC. (Refer to ES - 28)

Next

36 Reading of SSM4 data ([Short term fuel trim B1] and [Long term fuel trim B1])

(1) Start the engine.
(2) Select the following menu items using the SSM4. : [Each System] / [Engine Control System] / [Data monitor] / [Short term fuel trim B1], [Long term fuel trim B1]
(3) Check [Short term fuel trim B1] and [Long term fuel trim B1] displayed on the SSM4.

Standard value

Item name	Inspection conditions	Standard value
Sum of [Short term fuel trim B1] and [Long term fuel trim B1]	Vehicle conditions when malfunction occurs (during idling, test drive, etc.)	Within ±20%

NOTE:
If the trouble occurred when driving at high-speeds, shift the gear down and match the amount of air intake to the amount when the trouble occurred. Doing so enables measurement at moderate or low speeds.

NG → Replacement of the engine control computer (Refer to ES - 670)

OK

Complete

DTC	P0191	Fuel Rail Pressure Sensor "A" Circuit Range/Performance

Circuit description

The fuel pressure sensor, built into the delivery pipe, converts the fuel pressure into an electric signal and outputs it to the engine control computer. When the output from the fuel pressure sensor is cut off, the engine control computer stops the fuel pump ASSY (high-pressure side), and supplies fuel from the fuel pump (low-pressure side).

DTC No.	DTC detection condition	Suspected parts
P0191	When the condition where the fuel pressure sensor value was 2.38 kPa {243 kgf/cm^2, 3451 psi} or more continued for 2.5 seconds. (2-trip detection logic)	• Open or short circuit in the fuel pressure sensor • Fuel pressure sensor • ECM

ES

NOTE:

After checking the DTC output, using the SSM4, read the fuel pressure on the [Data monitor] screen.

MONITOR DESCRIPTION

If the output voltage of the fuel pressure sensor is outside specifications, DTC is set. The DTCs indicate open/short condition in the sensor circuits.

If these DTCs are set, the ECM switches to fail-safe mode, and the engine output is limited.

Fail-safe mode continues until the vehicle is turned to IG OFF.

Monitor strategy

Related DTCs	Fuel pressure sensor rationality check
Required Sensors/Components (Main)	Fuel pressure sensor
Required Sensors/Components (Related)	-
Frequency of Operation	Continuous
Duration	2.5 seconds
MIL Operation	2 operation cycle
Sequence of Operation	None

TYPICAL ENABLING CONDITIONS

All

Overlap prohibited DTC	None
IG	ON

TYPICAL MALFUNCTION THRESHOLDS

Value for the fuel pressure sensor	2.38 MPa {243 kgf/cm^2, 3451 psi} or more

Operation range

Voltage of the fuel rail pressure sensor (fuel pressure)	0.306 to 4.639V [0.00 to 25.87MPa {0 to 263.8kgf/cm^2, 0 to 3751psi}]

Circuit figure

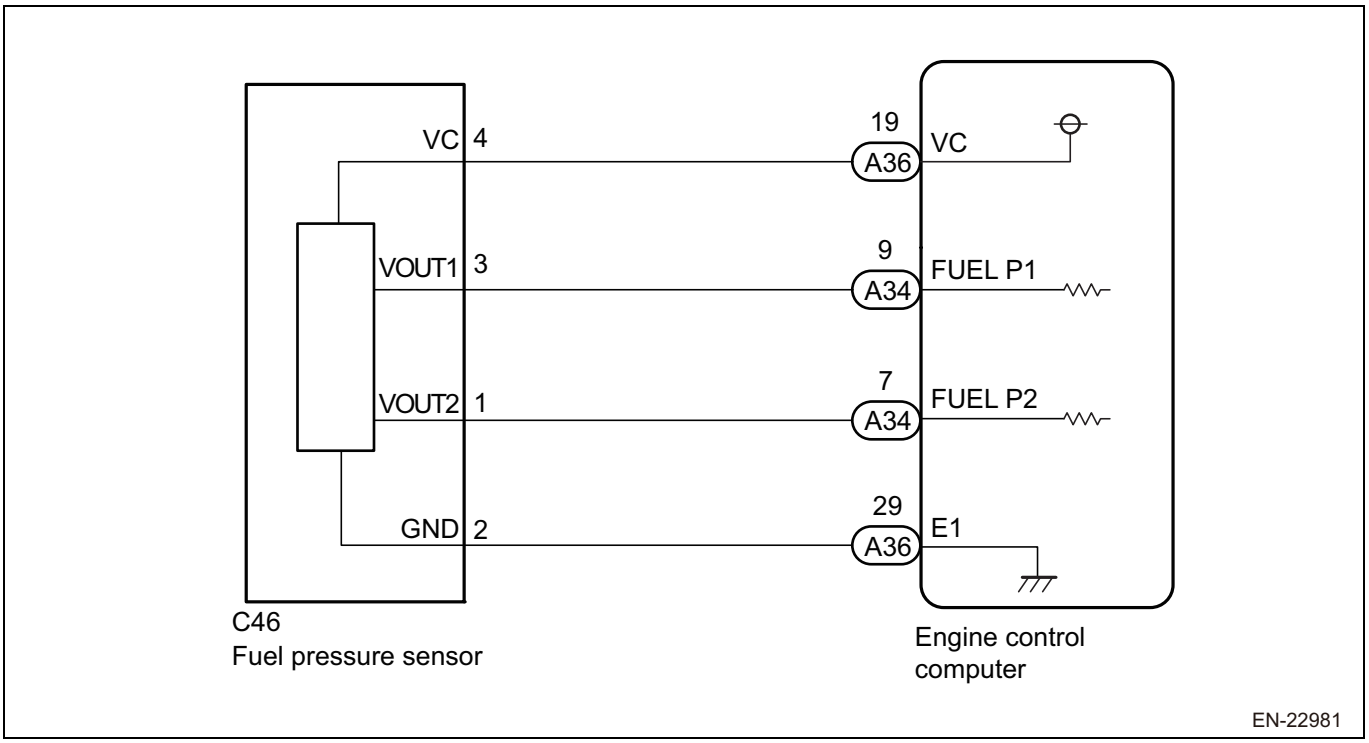

Description of functions

Test drive

Perform test drive to check if the DTC recurs.

1. Connect the SSM4 to the DLC3.
2. Turn the ignition switch to ON.
3. Turn on the SSM4.
4. Follow the SSM4 on-screen instructions to clear the DTCs. (Refer to ES - 28)
5. Turn the ignition switch to OFF, and wait for 30 seconds.
6. Turn the ignition switch to ON.
7. Turn on the SSM4.
8. Start the engine.
   NOTE:
   If the engine cannot be started, crank the engine for 10 seconds or more.
9. Idle the engine for 20 seconds or more.
10. Follow the SSM4 on-screen instructions to check the DTC. (Refer to ES - 28)

Inspection steps

NOTE:

Read the freeze frame data using the SSM4. A part of the engine running conditions under which the engine trouble occurred is recorded in the freeze frame data, which is useful for troubleshooting.

1	Inspection of the engine control computer

(1) Connect the SSM4 to the DLC3.
(2) Turn the ignition switch to ON.
(3) Follow the SSM4 on-screen instructions to clear the DTCs.
(4) Turn the ignition switch to OFF, and wait for 30 seconds.
(5) Start the engine.
(6) After warm-up, let the engine idle.
(7) Measure the voltage between the terminals.

Standard value

Measuring terminal	Result
A34-7 - A36-29	0.7 to 1.3V
A36-19 - A36-29	3.3 to 3.9V

NG → Replace the fuel pressure sensor. (Refer to FU - 40)

OK

Replace the engine control computer. (Refer to ES - 670)

ES

DTC P0192 Fuel Rail Pressure Sensor Circuit Low Input

Circuit description

The fuel pressure sensor, built into the delivery pipe, converts the fuel pressure into an electric signal and outputs it to the engine control computer. When the output from the fuel pressure sensor is cut off, the engine control computer stops the fuel pump ASSY (high-pressure side), and supplies fuel from the fuel pump (low-pressure side).

DTC No.	DTC detection condition	Suspected parts
P0192	The voltage in the fuel pressure sensor was too low for 2.4 seconds or more. (1 trips detection logic)	• Short circuit in the fuel pressure sensor • Fuel pressure sensor • ECM

NOTE:

After checking the DTC output, using the SSM4, read the fuel pressure on the [Data monitor] screen.

Fuel pressure	Content of malfunction
Approx. 0 kPa {0 mmHg, 0 inHg, 0 psi}	• Short circuit between the FUEL P2 circuit and the ground circuit • Short circuit between the FUEL P2 circuit and the E1 circuit

MONITOR DESCRIPTION

If the output voltage of the fuel pressure sensor is outside specifications, DTC is set. The DTCs indicate open/short condition in the sensor circuits.

If these DTCs are set, the ECM switches to fail-safe mode, and the engine output is limited.

Fail-safe mode continues until the vehicle is turned to IG OFF.

Monitor strategy

Related DTCs	Fuel pressure sensor output range check (Low voltage)
Required Sensors/Components (Main)	Fuel pressure sensor
Required Sensors/Components (Related)	-
Frequency of Operation	Continuous
Duration	2.4 seconds
MIL Operation	Immediately after
Sequence of Operation	None

TYPICAL ENABLING CONDITIONS

All

Overlap prohibited DTC	None
IG	ON

TYPICAL MALFUNCTION THRESHOLDS

Voltage of the fuel rail pressure sensor (fuel pressure)	Less than 0.32 V [0 MPa {0 kgf/cm2, 0 psi}]

Operation range

Voltage of the fuel rail pressure sensor (fuel pressure)	0.306 to 4.639V [0.00 to 25.87MPa {0 to 263.8kgf/cm^2, 0 to 3751psi}]

ES

Circuit figure

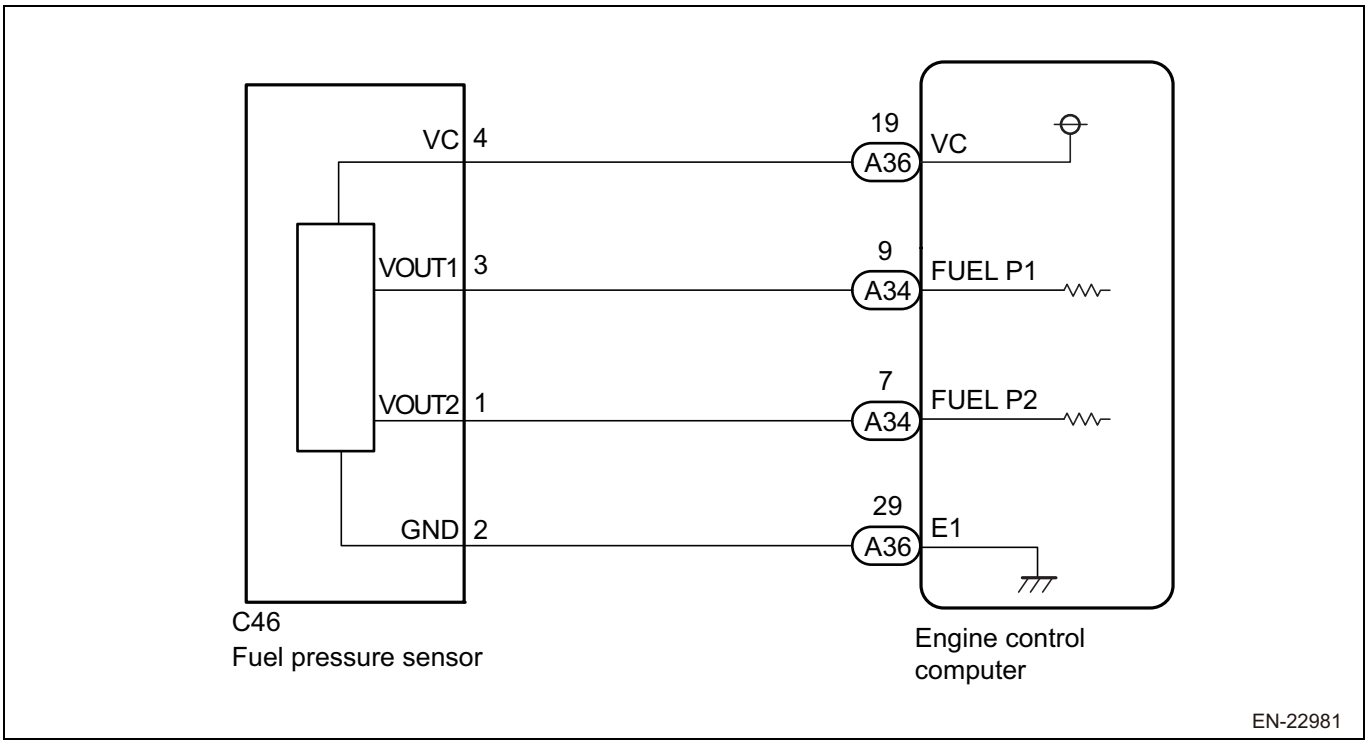

Description of functions

Test drive

Perform test drive to check if the DTC recurs.

1. Connect the SSM4 to the DLC3.
2. Turn the ignition switch to ON.
3. Turn on the SSM4.
4. Follow the SSM4 on-screen instructions to clear the DTCs. (Refer to ES - 28)
5. Turn the ignition switch to OFF, and wait for 30 seconds.
6. Turn the ignition switch to ON.
7. Turn on the SSM4.
8. Start the engine.
   NOTE:
   If the engine cannot be started, crank the engine for 10 seconds or more.
9. Idle the engine for 20 seconds or more.
10. Follow the SSM4 on-screen instructions to check the DTC. (Refer to ES - 28)

Inspection steps

1	Data monitor check

(1) Connect the SSM4 to the DLC3.
(2) Turn the ignition switch to ON.

(3) Follow the SSM4 on-screen instructions to clear the DTCs.
(4) Turn the ignition switch to OFF, and wait for 30 seconds.
(5) Start the engine.
(6) Use the Subaru Select Monitor or the general scan tool to read the [Fuel Rail Pressure A] value.

Standard value

Item name	Standard value
Actual fuel pressure 1	0MPa

NG → Inspection for problems that do not normally occur

OK

2	Wiring harness and connector check

(1) Turn the ignition switch to OFF.
(2) Disconnect the connectors from the engine control computer.
(3) Disconnect the connector from the fuel pressure sensor.
(4) Measure the resistance between the engine control computer connector and chassis ground.

Standard value

Measuring terminal	Result
A34-7 (FUEL P2) - Chassis ground	10 kΩ or more
C46 - 1 (VOUT2) - Chassis ground	10 kΩ or more

NG → Repair or replacement of wiring harness or connector

OK

Replacement of the fuel pressure sensor (Refer to FU - 40)

DTC P0193 Fuel Rail Pressure Sensor Circuit High Input

Circuit description

The fuel pressure sensor, built into the delivery pipe, converts the fuel pressure into an electric signal and outputs it to the engine control computer. When the output from the fuel pressure sensor is cut off, the engine control computer stops the fuel pump ASSY (high-pressure side), and supplies fuel from the fuel pump (low-pressure side).

DTC No.	DTC detection condition	Suspected parts
P0193	The voltage in the fuel pressure sensor was too high for 2.4 seconds or more. (1 trips detection logic)	• Open or short condition in the fuel pressure sensor circuit • Fuel pressure sensor • ECM

NOTE:

After checking the DTC output, using the SSM4, read the fuel pressure on the [Data monitor] screen.

Fuel pressure	Content of malfunction
Approx. 25000 kPa {188000 mmHg, 7400 inHg, 3600 psi} or more	• Open circuit in the FUEL P2 circuit • Open circuit in the VC circuit • Open circuit in the E1 circuit • Short circuit between the FUEL P2 circuit and the VC circuit • Short circuit between the FUEL P2 circuit and the power supply circuit

ES

MONITOR DESCRIPTION

If the output voltage of the fuel pressure sensor is outside specifications, DTC is set. The DTCs indicate open/short condition in the sensor circuits.

If these DTCs are set, the ECM switches to fail-safe mode, and the engine output is limited.

Fail-safe mode continues until the vehicle is turned to IG OFF.

Monitor strategy

Related DTCs	Fuel pressure sensor output range check (High voltage)
Required Sensors/Components (Main)	Fuel pressure sensor
Required Sensors/Components (Related)	-
Frequency of Operation	Continuous
Duration	2.4 seconds
MIL Operation	Immediately after
Sequence of Operation	None

TYPICAL ENABLING CONDITIONS

All

Overlap prohibited DTC	None
IG	ON

TYPICAL MALFUNCTION THRESHOLDS

Voltage of the fuel rail pressure sensor (fuel pressure)	3.764 V [27.20 MPa {2774 kgf/cm^2, 39440 psi}] or more

Operation range

Voltage of the fuel rail pressure sensor (fuel pressure)	0.306 to 4.639V [0.00 to 25.87MPa {0 to 263.8kgf/cm^2, 0 to 3751psi}]

Circuit figure

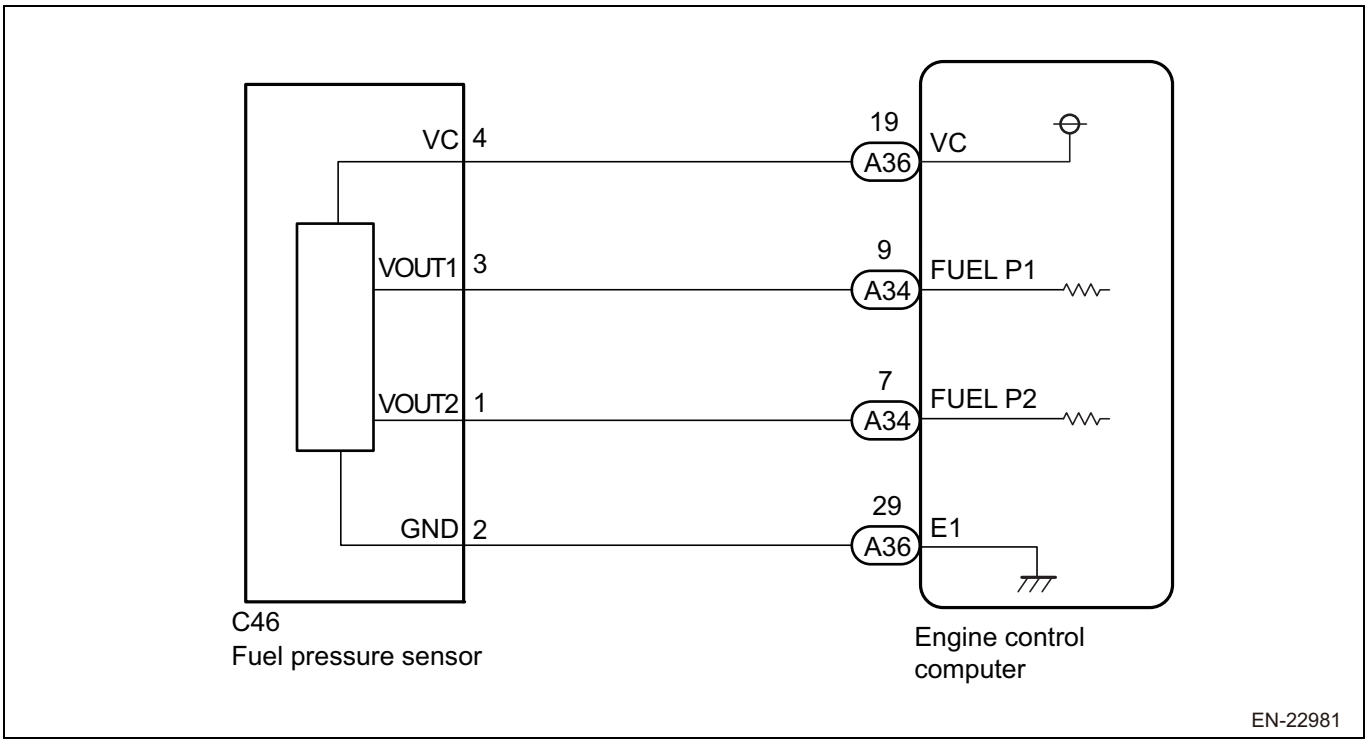

Description of functions

Test drive

Perform test drive to check if the DTC recurs.

1. Connect the SSM4 to the DLC3.
2. Turn the ignition switch to ON.
3. Turn on the SSM4.
4. Follow the SSM4 on-screen instructions to clear the DTCs. (Refer to ES - 28)
5. Turn the ignition switch to OFF, and wait for 30 seconds.
6. Turn the ignition switch to ON.
7. Turn on the SSM4.
8. Start the engine.
   NOTE:
   If the engine cannot be started, crank the engine for 10 seconds or more.
9. Idle the engine for 20 seconds or more.
10. Follow the SSM4 on-screen instructions to check the DTC. (Refer to ES - 28)

Inspection steps

1	Data monitor check

(1) Connect the SSM4 to the DLC3.
(2) Turn the ignition switch to ON.
(3) Follow the SSM4 on-screen instructions to clear the DTCs.
(4) Turn the ignition switch to OFF, and wait for 30 seconds.
(5) Start the engine.
(6) Use the Subaru Select Monitor or the general scan tool to read the [Fuel Rail Pressure A] value.

Standard value

Item name	Standard value
Actual fuel pressure 1	25 MPa or more

NG → The circuit returns to normal at this point even if a DTC is detected. Reproduce the faulty condition and perform the diagnosis again. In this case, temporary contact failure of the connector may be present, or the harness may be temporary open or shorted.

OK

ES

2	Check wiring harness and connector (voltage of the fuel pressure sensor)

(1) Turn the ignition switch to OFF.
(2) Disconnect the connector from the fuel pressure sensor.
(3) Turn the ignition switch to ON.
(4) Measure the voltage between the terminals.

Standard value

Measuring terminal	Result
C46 - 4 (VC) - chassis ground	4.5 to 5.5V

NG → Go to Step 5.

OK

3	Wiring harness and connector check

(1) Turn the ignition switch to OFF.
(2) Disconnect the connectors from the engine control computer.
(3) Disconnect the connector from the fuel pressure sensor.
(4) Measure the resistance between the engine control computer connector and fuel pressure sensor.

Standard value

Measuring terminal	Result
A34-7 (FUEL P2) - C46-1 (VOUT2)	Less than 1 Ω
A36-29(E1) - C46-2(GND)	Less than 1 Ω

NG → Repair or replacement of wiring harness or connector

OK

4	Check of the power supply for the fuel pressure sensor check

(1) Connect all connectors.
(2) Turn the ignition switch to ON.
(3) Measure the voltage between the engine control computer connector and chassis ground.

Standard value

Measuring terminal	Result
A34-7 (FUEL P2) - Chassis ground	5V or more
C46 - 1 (VOUT2) - Chassis ground	5V or more

NG → Replacement of the fuel pressure sensor (Refer to FU - 40)

OK

Repair or replacement of wiring harness or connector

5	Inspection of the wiring harness and the connector

(1) Turn the ignition switch to OFF.
(2) Disconnect the connectors from the engine control computer.
(3) Disconnect the connector from the fuel pressure sensor.
(4) Measure the resistance between the terminals.

Standard value

Measuring terminal	Result
A36-19(VC) - C46-4(VC)	Less than 1 Ω

NG → Repair or replacement of wiring harness or connector

OK

6	Inspection of the wiring harness and the connector

(1) Turn the ignition switch to OFF.
(2) Disconnect the connectors from the engine control computer.
(3) Disconnect the connector from the fuel pressure sensor.
(4) Measure the resistance between the terminals.

Standard value

Measuring terminal	Result
A36-19 (VC) - chassis ground	10 kΩ or more
C46 - 4 (VC) - chassis ground	10 kΩ or more

NG → Repair or replacement of wiring harness or connector

OK

Replacement of the engine control computer

DTC	P1192	Fuel Rail Pressure Sensor "B" Circuit Low

Circuit description

The fuel pressure sensor, built into the delivery pipe, converts the fuel pressure into an electric signal and outputs it to the engine control computer. When the output from the fuel pressure sensor is cut off, the engine control computer stops the fuel pump ASSY (high-pressure side), and supplies fuel from the fuel pump (low-pressure side).

DTC No.	DTC detection condition	Suspected parts
P1192	The voltage in the fuel pressure sensor was too low for 2.4 seconds or more. (1 trips detection logic)	• Short circuit in the fuel pressure sensor • Fuel pressure sensor • ECM

NOTE:

After checking the DTC output, using the SSM4, read the fuel pressure on the [Data monitor] screen.

Fuel pressure	Content of malfunction
Approx. 25000 kPa {188000 mmHg, 7400 inHg, 3600 psi} or more	• Short circuit between the FUEL P2 circuit and the VC circuit • Short circuit between the FUEL P2 circuit and the power supply circuit

MONITOR DESCRIPTION

If the output voltage of the fuel pressure sensor is outside specifications, DTC is set. The DTCs indicate open/short condition in the sensor circuits.

ES

If these DTCs are set, the ECM switches to fail-safe mode, and the engine output is limited.

Fail-safe mode continues until the vehicle is turned to IG OFF.

Monitor strategy

Related DTCs	Fuel pressure sensor output range check (Low voltage)
Required Sensors/Components (Main)	Fuel pressure sensor
Required Sensors/Components (Related)	-
Frequency of Operation	Continuous
Duration	2.4 seconds
MIL Operation	Immediately after
Sequence of Operation	None

TYPICAL ENABLING CONDITIONS

All

Overlap prohibited DTC	None
IG	ON

TYPICAL MALFUNCTION THRESHOLDS

Voltage of the fuel rail pressure sensor (fuel pressure)	Less than 0.625 V [28.96 MPa {295.3 kgf/cm^2, 4199 psi}]

Operation range

Voltage of the fuel rail pressure sensor (fuel pressure)	0.306 to 4.639V [0.00 to 25.87MPa {0 to 263.8kgf/cm^2, 0 to 3751psi}]

Circuit figure

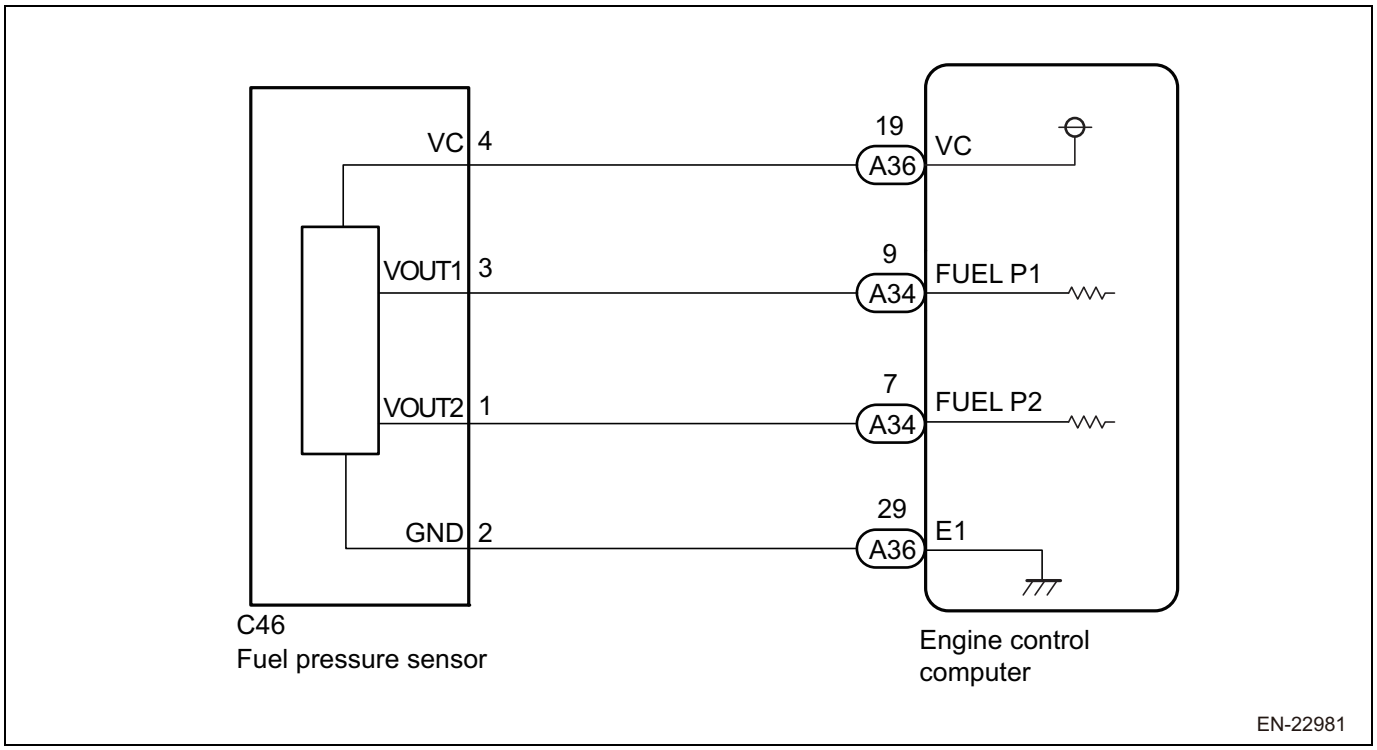

Description of functions

Test drive

Perform test drive to check if the DTC recurs.

1. Connect the SSM4 to the DLC3.
2. Turn the ignition switch to ON.
3. Turn on the SSM4.
4. Follow the SSM4 on-screen instructions to clear the DTCs. (Refer to ES - 28)
5. Turn the ignition switch to OFF, and wait for 30 seconds.
6. Turn the ignition switch to ON.
7. Turn on the SSM4.
8. Start the engine.
   NOTE:
   If the engine cannot be started, crank the engine for 10 seconds or more.
9. Idle the engine for 20 seconds or more.
10. Follow the SSM4 on-screen instructions to check the DTC. (Refer to ES - 28)

Inspection steps

NOTE:

Read the freeze frame data using the SSM4. A part of the engine running conditions under which the engine trouble occurred is recorded in the freeze frame data, which is useful for troubleshooting.

1	Data monitor check

(1) Connect the SSM4 to the DLC3.
(2) Turn the ignition switch to ON.
(3) Follow the SSM4 on-screen instructions to clear the DTCs.
(4) Turn the ignition switch to OFF, and wait for 30 seconds.
(5) Start the engine.
(6) Use the Subaru Select Monitor or the general scan tool to read the [Fuel Rail Pressure B] value.

Standard value

Item name	Standard value
Actual fuel pressure 2	0MPa

B → Inspection for problems that do not normally occur

A

ES

2	Inspection of the wiring harness and the connector

(1) Turn the ignition switch to OFF.
(2) Disconnect the connectors from the engine control computer.
(3) Disconnect the connector from the fuel pressure sensor.
(4) Measure the resistance between the engine control computer connector and chassis ground.

Standard value

Measuring terminal	Result
A36-29 (E1) - Chassis ground	10 kΩ or more
C46 - 1 (VOUT2) - Chassis ground	10 kΩ or more

NG → Repair or replacement of wiring harness or connector

OK

Replacement of the fuel pressure sensor (Refer to FU - 40)

DTC	P1193	Fuel Rail Pressure Sensor "B" Circuit High

Circuit description

The fuel pressure sensor, built into the delivery pipe, converts the fuel pressure into an electric signal and outputs it to the engine control computer. When the output from the fuel pressure sensor is cut off, the engine control computer stops the fuel pump ASSY (high-pressure side), and supplies fuel from the fuel pump (low-pressure side).

DTC No.	DTC detection condition	Suspected parts
P1193	The voltage in the fuel pressure sensor was too high for 2.4 seconds or more. (1 trips detection logic)	• Open or short condition in the fuel pressure sensor circuit • Fuel pressure sensor • ECM

NOTE:

After checking the DTC output, using the SSM4, read the fuel pressure on the [Data monitor] screen.

Fuel pressure	Content of malfunction
Approx. 0 kPa {0 mmHg, 0 inHg, 0 psi}	• Open circuit in the FUEL P2 circuit • Open circuit in the VC circuit • Open circuit in the E1 circuit • Short circuit between the FUEL P2 circuit and the ground circuit • Short circuit between the FUEL P2 circuit and the E1 circuit

MONITOR DESCRIPTION

If the output voltage of the fuel pressure sensor is outside specifications, DTC is set. The DTCs indicate open/short condition in the sensor circuits.

If these DTCs are set, the ECM switches to fail-safe mode, and the engine output is limited.

Fail-safe mode continues until the vehicle is turned to IG OFF.

Monitor strategy

Related DTCs	Fuel pressure sensor output range check (High voltage)
Required Sensors/Components (Main)	Fuel pressure sensor
Required Sensors/Components (Related)	-
Frequency of Operation	Continuous
Duration	2.4 seconds
MIL Operation	Immediately after
Sequence of Operation	None

TYPICAL ENABLING CONDITIONS

All

Overlap prohibited DTC	None
IG	ON

TYPICAL MALFUNCTION THRESHOLDS

Voltage of the fuel rail pressure sensor (fuel pressure)	4.492 V [0 MPa {0 kgf/cm^2, 0 psi}] or more

Operation range

Voltage of the fuel rail pressure sensor (fuel pressure)	0.306 to 4.639V [0.00 to 25.87MPa {0 to 263.8kgf/cm^2, 0 to 3751psi}]

Circuit figure

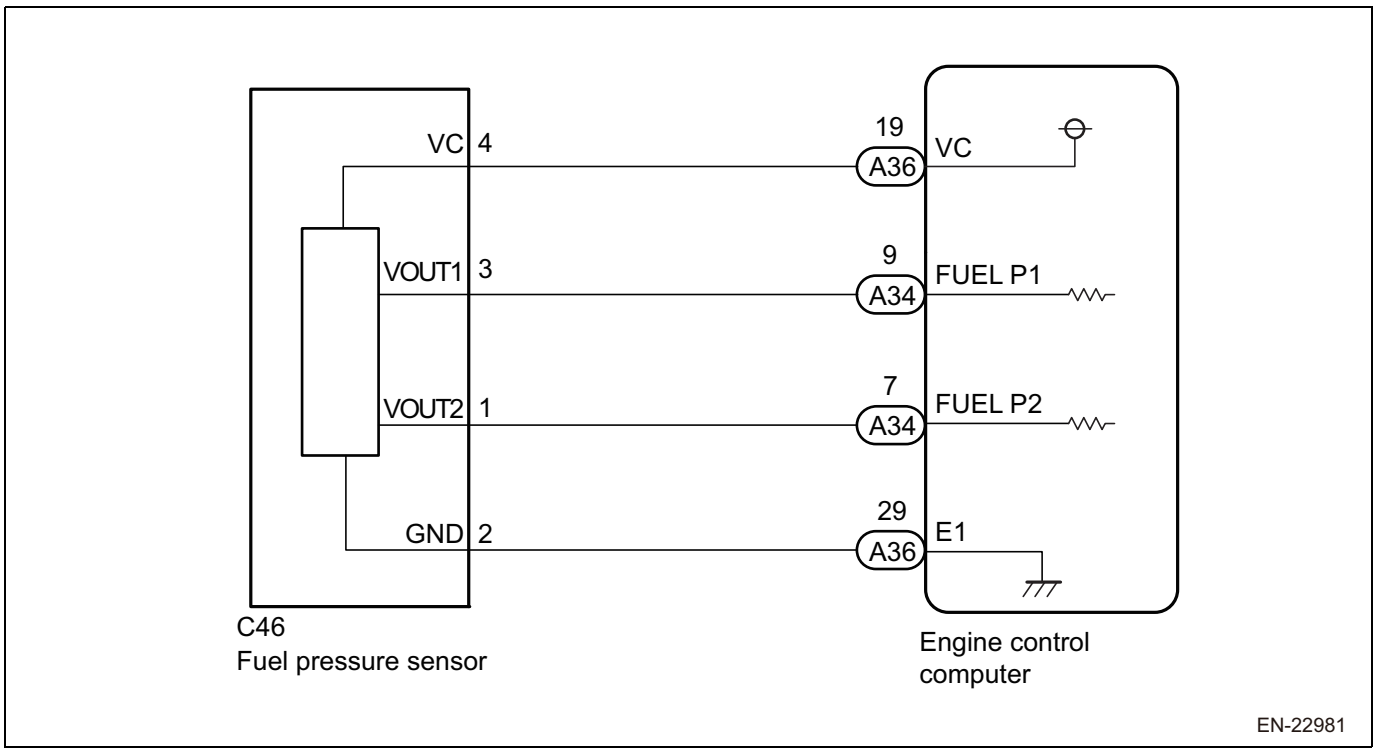

Description of functions
Test drive
Perform test drive to check if the DTC recurs.
1. Connect the SSM4 to the DLC3.
2. Turn the ignition switch to ON.
3. Turn on the SSM4.
4. Follow the SSM4 on-screen instructions to clear the DTCs. (Refer to ES - 28)
5. Turn the ignition switch to OFF, and wait for 30 seconds.
6. Turn the ignition switch to ON.
7. Turn on the SSM4.
8. Start the engine.
   NOTE:
   If the engine cannot be started, crank the engine for 10 seconds or more.
9. Idle the engine for 20 seconds or more.
10. Follow the SSM4 on-screen instructions to check the DTC. (Refer to ES - 28)

Inspection steps
NOTE:
Read the freeze frame data using the SSM4. A part of the engine running conditions under which the engine trouble occurred is recorded in the freeze frame data, which is useful for troubleshooting.

1	Data monitor check

(1) Connect the SSM4 to the DLC3.
(2) Turn the ignition switch to ON.
(3) Follow the SSM4 on-screen instructions to clear the DTCs.
(4) Turn the ignition switch to OFF, and wait for 30 seconds.
(5) Start the engine.
(6) Use the Subaru Select Monitor or the general scan tool to read the [Fuel Rail Pressure B] value.

Standard value

Item name	Standard value
Actual fuel pressure 2	25 MPa or more

NG → The circuit returns to normal at this point even if a DTC is detected. Reproduce the faulty condition and perform the diagnosis again. In this case, temporary contact failure of the connector may be present, or the harness may be temporary open or shorted.

OK

2	Check wiring harness and connector (voltage of the fuel pressure sensor)

(1) Turn the ignition switch to OFF.
(2) Disconnect the connector from the fuel pressure sensor.
(3) Turn the ignition switch to ON.
(4) Measure the voltage between the terminals.

Standard value

Measuring terminal	Result
C46 - 4 (VC) - chassis ground	4.5 to 5.5V

NG → Go to Step 5.

OK

3	Wiring harness and connector check

(1) Turn the ignition switch to OFF.
(2) Disconnect the connectors from the engine control computer.
(3) Disconnect the connector from the fuel pressure sensor.
(4) Measure the resistance between the engine control computer connector and fuel pressure sensor.

Standard value

Measuring terminal	Result
A36-29(E1) - C46-1(VOUT2)	Less than 1 Ω
A36-29(E1) - C46-2(GND)	Less than 1 Ω

NG → Repair or replacement of wiring harness or connector

OK

4	Check of the power supply for the fuel pressure sensor check

(1) Connect all connectors.
(2) Turn the ignition switch to ON.
(3) Measure the voltage between the engine control computer connector and chassis ground.

Standard value

Measuring terminal	Result
A34-7 (FUEL P2) - Chassis ground	5V or more
C46 - 1 (VOUT2) - Chassis ground	5V or more

NG → Replacement of the fuel pressure sensor (Refer to FU - 40)

OK

Repair or replacement of wiring harness or connector

5	Inspection of the wiring harness and the connector

(1) Turn the ignition switch to OFF.
(2) Disconnect the connectors from the engine control computer.
(3) Disconnect the connector from the fuel pressure sensor.
(4) Measure the resistance between the terminals.

Standard value

Measuring terminal	Result
A36-19(VC) - C46-4(VC)	Less than 1 Ω

NG → Repair or replacement of wiring harness or connector

OK

6	Inspection of the wiring harness and the connector

(1) Turn the ignition switch to OFF.
(2) Disconnect the connectors from the engine control computer.
(3) Disconnect the connector from the fuel pressure sensor.
(4) Measure the resistance between the terminals.

ES

Standard value

Measuring terminal	Result
A36-19 (VC) - chassis ground	10 kΩ or more
C46 - 4 (VC) - Chassis ground	10 kΩ or more

NG → Repair or replacement of wiring harness or connector

OK

Replacement of engine control computer

DTC	P0196	Engine Oil Temperature Sensor Range/Performance

Circuit description
The resistance of the thermistor built into the oil temperature sensor changes as the oil temperature changes. The engine oil temperature sensor is connected to the engine control computer in the same way the inlet air temperature sensor is connected.
NOTE:
When either of these DTCs is stored, the engine control computer enters fail-safe mode. The engine control computer fixes the specified engine oil temperature at 70°C {158°F} during the fail-safe mode operation. The engine control computer continues fail-safe mode operation until the normal condition is restored.

DTC No.	DTC detection condition	Suspected parts
P0196	When, even though the estimated engine oil temperature is higher than 45°C {113°F}, the value for the engine oil temperature sensor is lower than 45°C{113°F}. (2 trips detection logic)	• Engine oil temperature sensor • ECM

Monitor strategy

Related DTCs	P0196: Engine oil temperature sensor functional check
Required Sensors/Components (Main)	Engine oil temperature sensor
Required Sensors/Components (Related)	-
Frequency of Operation	Once per driving cycle
Duration	Less than 1 second
MIL Operation	2 operation cycle
Sequence of Operation	None

TYPICAL ENABLING CONDITIONS

Diagnosis 1	Overlap prohibited DTC	
	Battery Voltage	10.9V or more
	Soak time	21600 seconds or more
	Block heater judgment	Complete
	Block heater operation	Not operating

Block heater judgment Duration while rear oxygen sensor output voltage is less than 0.55 V	550 r/min or more
When conditions are met, the state is judged as "Block heater is not operating". Σ (engine coolant temp. - engine coolant temp. at engine startup) Time required for judgment: 1 sec. ×20 times (per second)	-10°C (-18°F) or more

Diagnosis 2	Battery Voltage	10.9V or more
	Engine oil temperature at engine start	Less than 45°C (122°F)
	Engine speed	500 RPM or more
	Idling ratio	50% or less

MALFUNCTION THRESHOLDS

Diagnosis 1	|Engine oil temp. at engine startup - Engine coolant temp. at engine startup|	More than 10°C (18°F)
	|engine oil temp. at engine startup - intake air temp. in 30s after engine startup|	More than 10°C (18°F) (varies depending on the ambient temperature)

Diagnosis 2	Engine oil temperature	Less than 45°C (113°F)
	Elapsed time after starting the engine	2000 seconds or more (varies depending on the intake air temperature when the engine is started)

Circuit figure

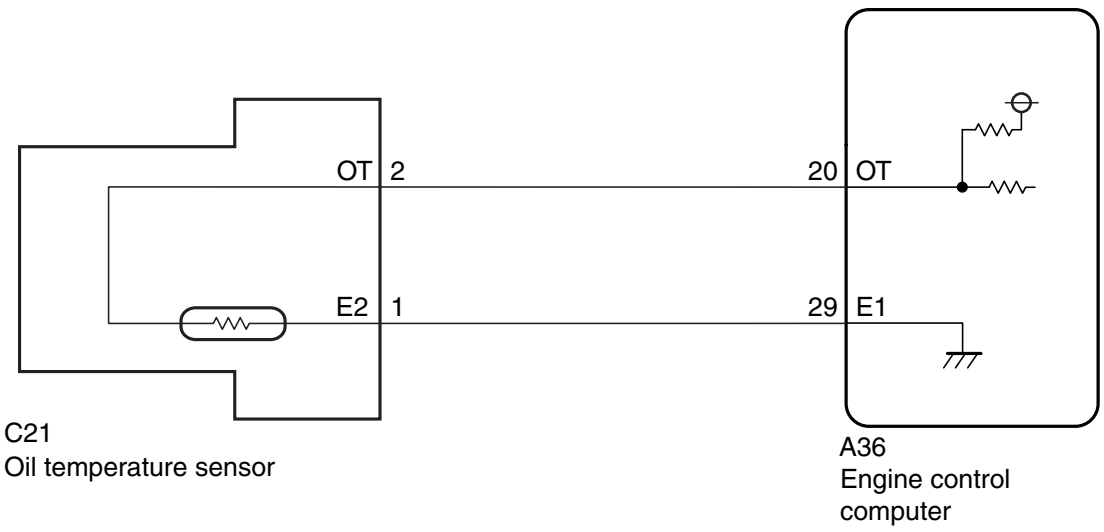

Description of functions

Test drive

Perform test drive to check if the DTC recurs.

1. Connect the SSM4 to the DLC3.
2. Turn the ignition switch to ON.
3. Turn on the SSM4.
4. Follow the SSM4 on-screen instructions to clear the DTCs. (Refer to ES - 28)
5. Turn the ignition switch to OFF, and wait for 30 seconds.
6. Turn the ignition switch to ON.
7. Turn on the SSM4.
8. Select the following menu items using the SSM4. : [Each System] / [Engine Control System] / [Data monitor] / [Coolant Temp./ Intake Air Temp.]
9. Confirm that the engine coolant temperature and intake air temperature meet the condition described below.
   Condition: |Engine coolant temperature - intake air temperature| is 5°C {9°F} or less
   NOTE:
   If the condition is not met, turn the ignition switch to OFF, and wait until the condition is met.
10. If the condition is met, start the engine, and let it idle for 2 minutes or more.
    NOTE:
    Do not move the select lever from "P" or "N" range while the engine is idling.
11. Follow the SSM4 on-screen instructions to check the DTC. (Refer to ES - 28)

Inspection steps

1	Reading diagnostic codes

(1) Connect the SSM4 to the DLC3.
(2) Turn the ignition switch to ON.
(3) Turn on the SSM4.
(4) Follow the SSM4 on-screen instructions to check the DTC. (Refer to ES - 28)

Result

Result	Go to
No DTCs are output.	A
DTCs are output.	B

B → To corresponding DTC chart (refer to ES - 12)

A

2	Engine oil temperature sensor check

(1) Disconnect the connector from the engine oil temperature sensor.
(2) Measure the resistance between engine oil temperature sensor terminals both when the engine is cooled and warmed.

Result

Result	Go to
Resistance between C21-1 and C21-2 varies when the oil temperature is cooled and warmed.	A
Resistance between C21-1 and C21-2 does not vary when the oil temperature is cooled and warmed.	B

B → Replace the engine oil temperature sensor.

A

Repair a poor contact of ECM connectors.

DTC	P0197	Engine Oil Temperature Sensor Low

DTC	P0198	Engine Oil Temperature Sensor High

ES

Circuit description

The resistance of the thermistor built into the oil temperature sensor changes as the oil temperature changes. The engine oil temperature sensor is connected to the engine control computer in the same way the inlet air temperature sensor is connected.

NOTE:

When either of these DTCs is stored, the engine control computer enters fail-safe mode. The engine control computer fixes the specified engine oil temperature at 70°C {158°F} during the fail-safe mode operation. The engine control computer continues fail-safe mode operation until the normal condition is restored.

DTC No.	DTC detection condition	Suspected parts
P0197	The voltage for the engine oil temperature sensor is less than 0.203 V for 0.5 seconds or more. (1 trips detection logic)	• Engine oil temperature sensor • ECM
P0198	The voltage for the engine oil temperature sensor is 4.698 V or higher for 0.5 seconds or higher. (1 trips detection logic)	

MONITOR DESCRIPTION

P0197, P0198

The ECM observes the sensor voltage, and uses this value in calculating the engine oil temperature. If the sensor output voltage is outside the range of normal operations, the ECM interprets that as trouble with the engine oil temperature sensor, and records a DTC.

Monitor strategy

Related DTCs	P0197: Engine oil temperature sensor range check (Low voltage) P0198: Engine oil temperature sensor range check (High voltage)
Required Sensors/Components (Main)	Engine oil temperature sensor
Required Sensors/Components (Related)	-
Frequency of Operation	Continuous
Duration	0.5 seconds
MIL Operation	Immediately after
Sequence of Operation	None

TYPICAL ENABLING CONDITIONS

P0197, P0198

Overlap prohibited DTC	None
Ignition switch	ON

TYPICAL MALFUNCTION THRESHOLDS

P0197

Voltage of the engine oil temperature sensor [Oil Temperature]	Less than 0.203 V (more than 165.5°C {330°F})

P0198

Voltage of the engine oil temperature sensor [Oil Temperature]	4.698 V or more (-46.2°C {-51.2°F} or less)

Operation range

Voltage of the engine oil temperature sensor [Oil Temperature]	0.210 to 4.688V (163.70 to -43.85°C {326.7 to -46.9°F})

Circuit figure

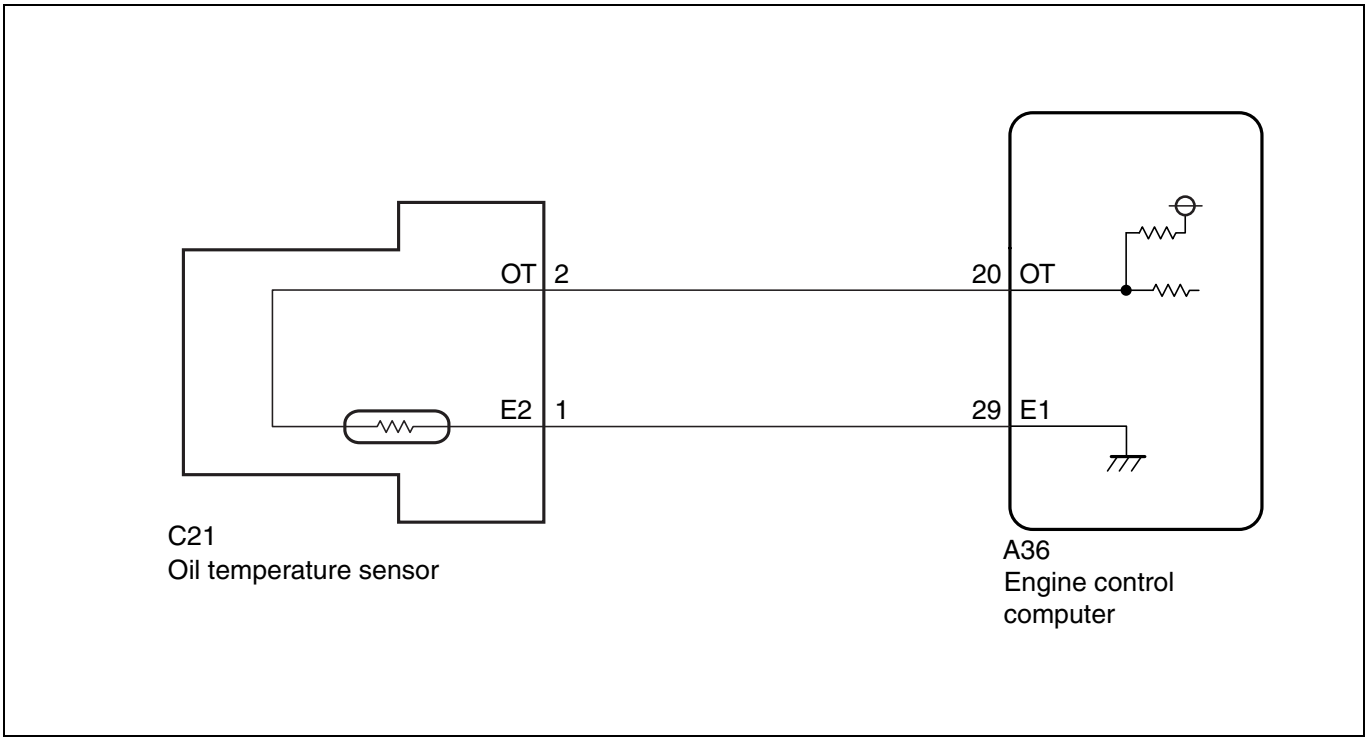

Description of functions

Test drive

Perform test drive to check if the DTC recurs.

1. Connect the SSM4 to the DLC3.
2. Turn the ignition switch to ON.
3. Turn on the SSM4.
4. Follow the SSM4 on-screen instructions to clear the DTCs. (Refer to ES - 28)
5. Turn the ignition switch to OFF, and wait for 30 seconds.
6. Turn the ignition switch to ON.
7. Turn on the SSM4.
8. Start the engine.
   NOTE:
   If the engine cannot be started, crank the engine for 10 seconds or more.
9. Idle the engine for 20 seconds or more.
10. Follow the SSM4 on-screen instructions to check the DTC. (Refer to ES - 28)

Inspection steps

NOTE:

Read the freeze frame data using the SSM4. A part of the engine running conditions under which the engine trouble occurred is recorded in the freeze frame data, which is useful for troubleshooting.

1	Reading of SSM4 data ([Oil Temperature])

(1) Connect the SSM4 to the DLC3.
(2) Turn the ignition switch to ON.
(3) Select the following menu items using the SSM4. : [Each System] / [Engine Control System] / [Data monitor] / [Oil Temperature]
(4) With the engine stopped, read the [Oil Temperature] displayed on the SSM4.

ES

Result

Result	Go to
-40°C {-40°F} (open circuit)	A
150°C {302°F} (short circuit)	B
Equal to actual oil temperature	C

NOTE:
- If the SSM4 display is -40°C {-40°F}, there is an open circuit.
- If the SSM4 display is 150°C {302°F}, there is a short circuit.

B → Go to Step 4.

C → Inspection for problems that do not normally occur (Refer to ES - 28)

A

2	Reading of SSM4 data (wiring harness open circuit check)

SST 09843-18040

NOTE:
For the inspection procedure and precautions for wiring harnesses and connectors, refer to IN - 36.

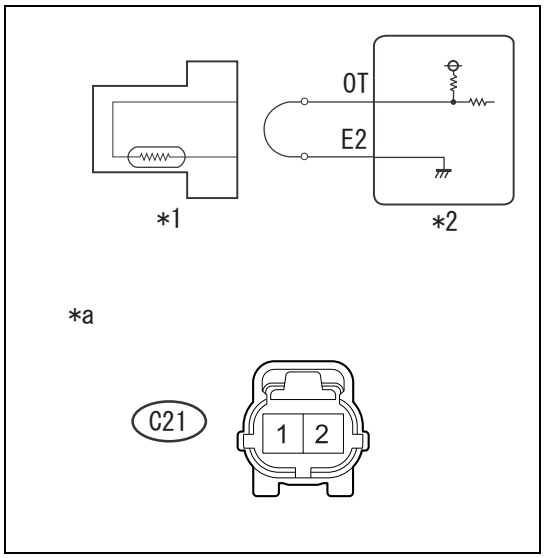

(1) Connect the SSM4 to the DLC3.
(2) Disconnect the connector for the engine oil temperature sensor.
(3) Using SST (diagnostic check wire No. 2), short-circuit between terminals 1 and 2 of the engine oil temperature sensor.
(4) Turn the ignition switch to ON.
(5) Select the following menu items using the SSM4. : [Each System] / [Engine Control System] / [Data monitor] / [Oil Temperature]
(6) Read the [Oil Temperature] displayed on the SSM4.
Displayed temperature: 150°C {302°F}

Captions in illustration

*1	Engine oil temperature sensor
*2	Engine control computer
*a	Front side of vehicle wiring harness connector (engine oil temperature sensor connector)

NG → Go to Step 3.

OK

Replacement of the engine oil temperature sensor (Refer to ES - 698)

3	Check wiring harness and connector (engine control computer - engine oil temperature sensor)

NOTE:
For the inspection procedure and precautions for wiring harnesses and connectors, refer to IN - 36.
(1) Disconnect the connector for the engine oil temperature sensor.
(2) Disconnect the connector for the engine control computer.
(3) Measure the resistance between the terminals. (For terminal arrangement, refer to ES - 36.)

ES

Resistance (open circuit check)

Inspection terminals	Inspection conditions	Standard value
A36-20 (OT) - C21-2 (OT)	Always	Less than 1 Ω
A36-29(E1) - C21-1(E2)	Always	Less than 1 Ω

NG → Repair or replacement of wiring harness or connector

OK

Replacement of the engine control computer (Refer to ES - 670)

4	Reading of SSM4 data (wiring harness short circuit check)

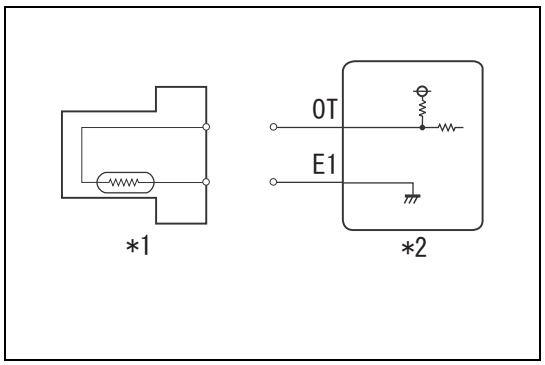

(1) Connect the SSM4 to the DLC3.
(2) Disconnect the connector for the engine oil temperature sensor.
(3) Turn the ignition switch to ON.
(4) Select the following menu items using the SSM4. : [Each System] / [Engine Control System] / [Data monitor] / [Oil Temperature]
(5) Read the [Oil Temperature] displayed on the SSM4.
Displayed temperature: -40°C {-40°F}

Captions in illustration

*1	Engine oil temperature sensor
*2	Engine control computer

NG → Go to Step 5.

OK

Replacement of the engine oil temperature sensor (Refer to ES - 698)

5	Check wiring harness and connector (engine oil temperature sensor - engine control computer)

NOTE:
For the inspection procedure and precautions for wiring harnesses and connectors, refer to IN - 36.
(1) Disconnect the connectors for the engine oil temperature sensor and for the engine control computer.
(2) Measure the resistance between the terminals. (For terminal arrangement, refer to ES - 36.)

Resistance (short circuit check)

Inspection terminals	Inspection conditions	Standard value
A36-20 (OT) and C21-2 (OT) - other terminals and chassis ground	Always	10 k Ωor more
A36-29 (E1) and C21-1 (E2) - other terminals and chassis ground	Always	10 k Ωor more

NG → Repair or replacement of wiring harness or connector

OK

Replacement of the engine control computer (Refer to ES - 670)

ES

DTC	P0201	Injector Circuit / Open - (Cylinder 1)

DTC	P0202	Injector Circuit / Open - (Cylinder 2)

DTC	P0203	Injector Circuit / Open - (Cylinder 3)

DTC	P0204	Injector Circuit / Open - (Cylinder 4)

Circuit description

The D-4S system has the cylinder direct fuel injection method, which directly injects highly pressurized fuel into the combustion chamber, and the port injection method, which injects fuel into the intake port. The D-4S uses one or the other depending on the engine driving status. The engine control computer monitors the port injector's injection control. If a malfunction occurs in a port injector circuit, the injection control for the related cylinder is stopped, and the engine control computer turns on the MIL.

DTC No.	DTC detection conditions	Suspected parts
P0201	Consecutively receives diagnosis information (open circuit detection / GND short circuit / +B short circuit or overheating) from the fuel injector IC 10 times or more (No. 1 cylinder) (1 trips detection logic)	• Open / short circuit in the port injection injector • INJ fuse • No. 1 injector ASSY (port injection) • ECM
P0202	Consecutively receives diagnosis information (open circuit detection / GND short circuit / +B short circuit or overheating) from the fuel injector IC 10 times or more (No. 2 cylinder) (1 trips detection logic)	• Open / short circuit in the port injection injector (No. 2 cylinder) • INJ fuse • No. 2 injector ASSY (port injection) • ECM
P0203	Consecutively receives diagnosis information (open circuit detection / GND short circuit / +B short circuit or overheating) from the fuel injector IC 10 times or more (No. 3 cylinder) (1 trips detection logic)	• Open / short circuit in the port injection injector (No. 3 cylinder) • INJ fuse • No. 3 injector ASSY (port injection) • ECM
P0204	Consecutively receives diagnosis information (open circuit detection / GND short circuit / +B short circuit or overheating) from the fuel injector IC 10 times or more (No. 4 cylinder) (1 trips detection logic)	• Open / short circuit in the port injection injector (No. 4 cylinder) • INJ fuse • No. 4 injector ASSY (port injection) • ECM

MONITOR DESCRIPTION

The ECM monitors the injection control of the port injector. If a malfunction is detected in the port injector circuits, the ECM cancels the cylinder injection control, and turns ON the MIL.

Monitor strategy

Related DTCs	P0201: Fuel injector circuit continuity (Cylinder 1) P0202: Fuel injector circuit continuity (Cylinder 2) P0203: Fuel injector circuit continuity (Cylinder 3) P0204: Fuel injector circuit continuity (Cylinder 4)
Required Sensors/Components (Main)	Injector ASSY (port injection) (cylinders 1-4)
Required Sensors/Components (Related)	None
Frequency of Operation	Continuous
Duration	2.56 seconds
MIL Operation	Immediately after
Sequence of Operation	None

TYPICAL ENABLING CONDITIONS

Overlap prohibited DTC	None
Battery Voltage	10.9V or more
Elapsed time after starting the engine	More than 1 second
Engine Speed	500 RPM or more
Fuel Cutoff	Control not in progress

TYPICAL MALFUNCTION THRESHOLDS

Malfunction signal from the injector IC	ON

Circuit figure

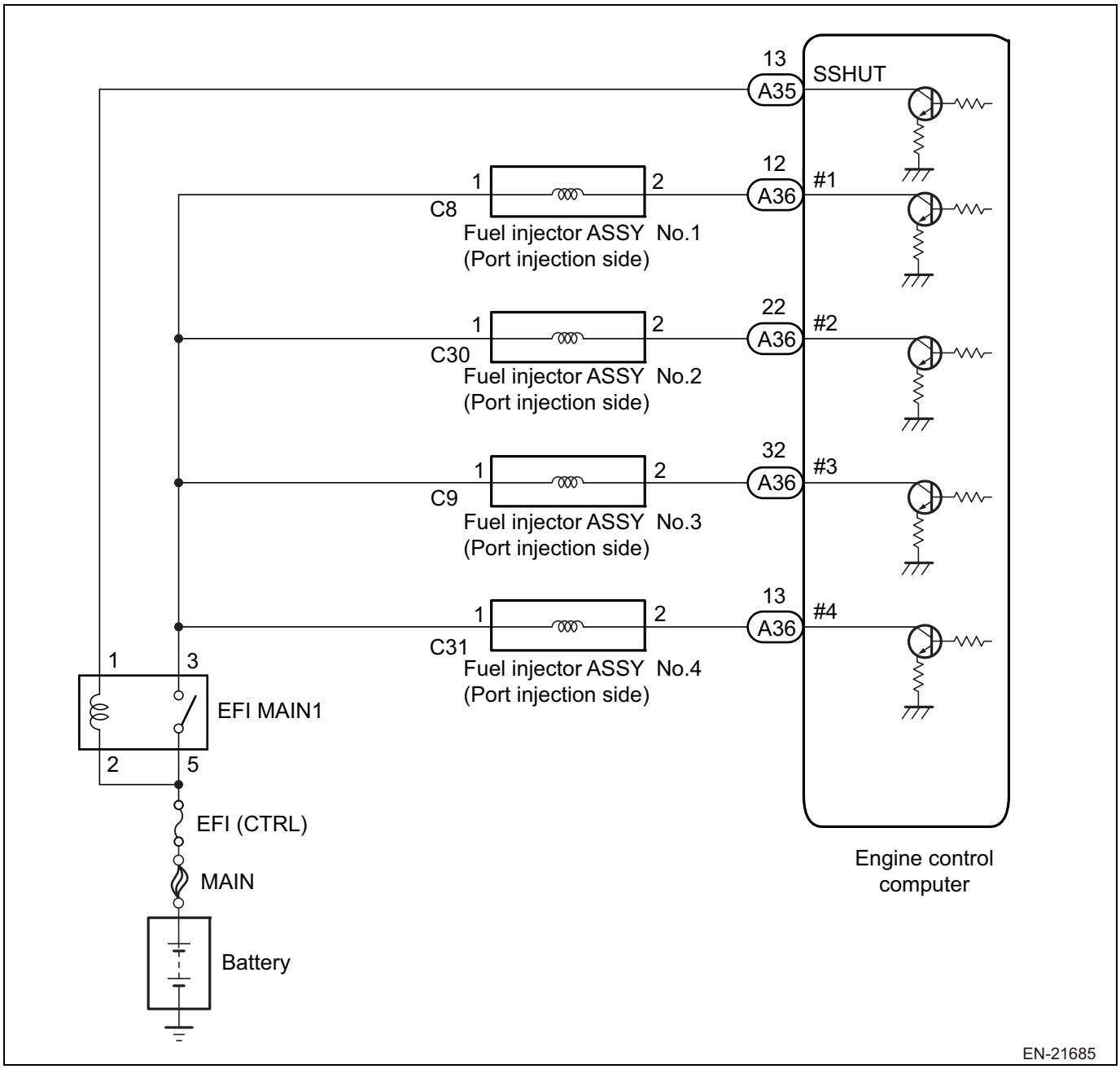

Description of functions

Test drive

Perform test drive to check if the DTC recurs.

1. Connect the SSM4 to the DLC3.
2. Turn the ignition switch to ON.
3. Turn on the SSM4.
4. Follow the SSM4 on-screen instructions to clear the DTCs. (Refer to ES - 28)
5. Turn the ignition switch to OFF, and wait for 30 seconds.
6. Turn the ignition switch to ON.
7. Turn on the SSM4.
8. Start the engine.
   NOTE:
   If the engine cannot be started, crank the engine for 10 seconds or more.
9. Idle the engine for 20 seconds or more.
10. Follow the SSM4 on-screen instructions to check the DTC. (Refer to ES - 28)

Inspection steps
CAUTION:
Check fuses in this circuit before performing the troubleshooting.
NOTE:

- Read the freeze frame data using the SSM4. A part of the engine running conditions under which the engine trouble occurred is recorded in the freeze frame data, which is useful for troubleshooting.
- If DTC P0201 is displayed, inspect the fuel injector circuit of the No. 1 cylinder.
- If DTC P0202 is displayed, inspect the fuel injector circuit of the No. 2 cylinder.
- If DTC P0203 is displayed, inspect the fuel injector circuit of the No. 3 cylinder.
- If DTC P0204 is displayed, inspect the fuel injector circuit of the No. 4 cylinder.
- Bank 1 shows the side where No. 1 cylinder is located.
- Bank 2 shows the side where No. 2 cylinder is located.

1	Read DTC

(1) Connect the SSM4 to the DLC3.
(2) Turn the ignition switch to ON.
(3) Follow the SSM4 on-screen instructions and read the DTC. (Refer to ES - 28)

Result

Result	Go to
The DTC for the corresponding abnormal cylinder is output.	A
The DTCs for all cylinders are output.	B
Other DTCs are also output.	C

B → Go to Step 5.

C → To corresponding DTC chart (refer to ES - 12)

A

2	Check wiring harness and connector (voltage inspection)

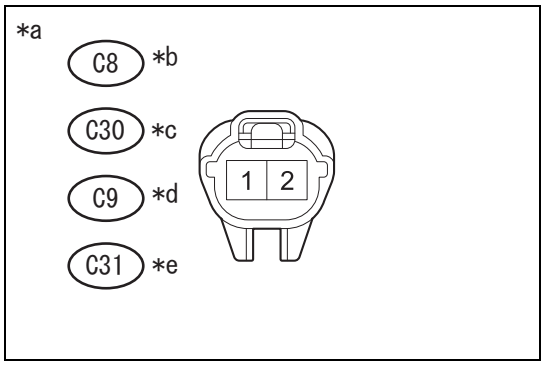

NOTE:
For the inspection procedure and precautions for wiring harnesses and connectors, refer to IN - 36.
(1) Disconnect the connector for the fuel injector ASSY.
(2) Measure the voltage between the terminals.
Voltage

Inspection terminals	Inspection conditions	Standard value
C8-1 - chassis ground	IG ON	11 to 14 V
C30-1 - chassis ground	IG ON	11 to 14 V
C9-1 - chassis ground	IG ON	11 to 14 V
C31-1 - chassis ground	IG ON	11 to 14 V

Captions in illustration

*a	Front side of vehicle wiring harness connector (fuel injector ASSY connector)
*b	No. 1 cylinder
*c	No. 2 cylinder
*d	No. 3 cylinder

*e	No. 4 cylinder

NG → Go to Step 5.

OK

3	Check wiring harness and connector (engine control computer - fuel injector ASSY)

NOTE:
For the inspection procedure and precautions for wiring harnesses and connectors, refer to IN - 36.

(1) Disconnect the connector for the engine control computer.
(2) Disconnect the connector for the fuel injector ASSY.
(3) Measure the resistance between the terminals. (For terminal arrangement, refer to ES - 36.)

Resistance (open circuit check)

Inspection terminals	Inspection conditions	Standard value
A36-12 (#1) - C8-2	Always	Less than 1 Ω
A36-22 (#2) - C30-2	Always	Less than 1 Ω
A36-32 (#3) - C9-2	Always	Less than 1 Ω
A36-13 (#4) - C31-2	Always	Less than 1 Ω

Resistance (short circuit check)

Inspection terminals	Inspection conditions	Standard value
A36-12 (#1) and C8-2 - other terminals and chassis ground	Always	10 k Ωor more
A36-22 (#2) and C30-2 - other terminals and chassis ground	Always	10 k Ωor more
A36-32 (#3) and C9-2 - other terminals and chassis ground	Always	10 k Ωor more
A36-13 (#4) and C31-2 - other terminals and chassis ground	Always	10 k Ωor more

NG → Repair or replacement of wiring harness or connector

OK

4	Unit inspection of the fuel injector ASSY (for port injection)

(1) Perform a unit inspection on the fuel injector ASSY (for port injection). (Refer to FU - 29)

NG → Replacement of the fuel injector ASSY (for port injection) (Refer to FU - 21)

OK

Replacement of the engine control computer (Refer to ES - 670)

5	Relay unit inspection (EFI MAIN1 relay)

(1) Perform unit inspection of EFI MAIN1 relay. (Refer to ES - 713)

NG → Relay replacement (EFI MAIN1 relay)

OK

6	Check wiring harness and connector (fuel injector ASSY - engine compartment relay block)

NOTE:
For the inspection procedure and precautions for wiring harnesses and connectors, refer to IN - 36.

(1) Disconnect the connector for the fuel injector ASSY.
(2) Remove the EFI MAIN1 relay from the engine compartment relay block.
(3) Measure the resistance between the terminals.

ES

Resistance (open circuit check)

Inspection terminals	Inspection conditions	Standard value
3 (EFI MAIN1 relay holder) - C8-1	Always	Less than 1 Ω
3 (EFI MAIN1 relay holder) - C30-1	Always	Less than 1 Ω
3 (EFI MAIN1 relay holder) - C9-1	Always	Less than 1 Ω
3 (EFI MAIN1 relay holder) - C31-1	Always	Less than 1 Ω

Resistance (short circuit check)

Inspection terminals	Inspection conditions	Standard value
3 (EFI MAIN1 relay holder) and C8-1 - other terminals and chassis ground	Always	10 k Ωor more
3 (EFI MAIN1 relay holder) and C30-1 - other terminals and chassis ground	Always	10 k Ωor more
3 (EFI MAIN1 relay holder) and C9-1 - other terminals and chassis ground	Always	10 k Ωor more
3 (EFI MAIN1 relay holder) and C31-1 - other terminals and chassis ground	Always	10 k Ωor more

NG → Repair or replacement of wiring harness or connector

OK

Inspection of the ECM power supply system (Refer to ES - 642)

DTC	P0230	Fuel Pump Primary Circuit

Circuit description

The fuel pump circuit consists of the engine control computer, the fuel pump, and the fuel pump control computer ASSY (that operates the fuel pump). The engine control computer determines the operation speed of the fuel pump based on the engine output. The operation speed is converted to a load signal and sent to the fuel pump control computer ASSY. Then, based on the signal sent from the engine control computer, the fuel pump control computer ASSY adjusts the operation speed of the fuel pump from 3 speeds. The fuel pump control computer ASSY also has a self-diagnosis function. Based on the status of the fuel pump circuit, the fuel pump control computer ASSY outputs a diagnosis signal (DI) to the engine control computer. Then, the engine control computer determines if there is some trouble in the fuel pump circuit.

DTC No.	DTC detection conditions	Suspected parts
P0230	Open / short circuit in the fuel pump circuit for 2.5 seconds or more (2 trips detection logic)	• Open / short circuit in the fuel pump (low-pressure side) • No. 1 integration relay • Fuel pump (low-pressure side) • Fuel pump control ECM • ECM

MONITOR DESCRIPTION

For monitoring the fuel pump (low-pressure side) circuit, the ECM checks the fuel pump control signal (FPC) and the diagnosis signal (FPCDG). The FPC voltage fluctuates between approx. 0 - 12 V (duty signal).

Based on the status of the fuel pump control ECM, the FPCDG voltage fluctuates between approx. 0 - 12 V. Therefore, the ECM compares the fluctuations of the FPC voltage and the FPCDG voltage, and determines if there is a malfunction in the fuel pump (low-pressure side) circuit. If the ECM determines that there is a malfunction in the fuel pump (low-pressure side) circuit, then the DTC is immediately recorded.

Monitor strategy

Related DTCs	P0230: Fuel pump control circuit continuity
Required Sensors/Components (Main)	Fuel pump control ECM
Required Sensors/Components (Related)	-
Frequency of Operation	Continuous
Duration	2.5 seconds
MIL Operation	2 operation cycle
Sequence of Operation	None

TYPICAL ENABLING CONDITIONS

Battery Voltage	8V or more
After engine is started	180 seconds or more

TYPICAL MALFUNCTION THRESHOLDS

Output diagnosis signal of the fuel control ECM	Battery voltage ×0.4 V or less

NOTE:

When the remaining fuel level is low, be careful of trouble in the remaining amount of fuel and the meter system (DTC B1500), because these are outside the diagnostic detection conditions.

Circuit figure

For circuit figure, refer to ES - 603.

Description of functions

Test drive

Perform test drive to check if the DTC recurs.

1. Connect the SSM4 to the DLC3.
2. Turn the ignition switch to ON.
3. Turn on the SSM4.
4. Follow the SSM4 on-screen instructions to clear the DTCs. (Refer to ES - 28)
5. Turn the ignition switch to OFF, and wait for 30 seconds.
6. Turn the ignition switch to ON.
7. Turn on the SSM4.
8. Start the engine.
   NOTE:
   If the engine cannot be started, crank the engine for 10 seconds or more.
9. Idle the engine for 20 seconds or more.
10. Follow the SSM4 on-screen instructions to check the DTC. (Refer to ES - 28)

Inspection steps

CAUTION:

Before performing troubleshooting, check the fuse for this circuit.

NOTE:
Read the freeze frame data using the SSM4. A part of the engine running conditions under which the engine trouble occurred is recorded in the freeze frame data, which is useful for troubleshooting.

1	Check wiring harness and connector (fuel pump control computer ASSY power supply circuit)

NOTE:
For the inspection procedure and precautions for wiring harnesses and connectors, refer to IN - 36.

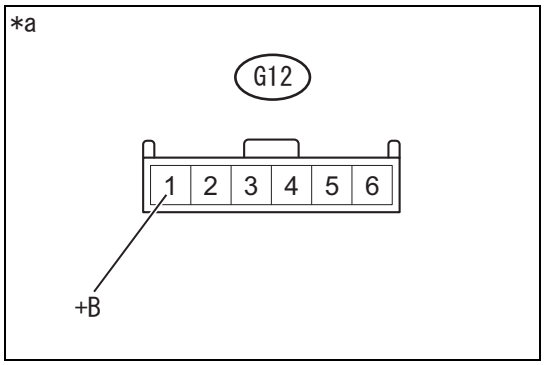

(1) Disconnect the connector for the fuel pump control computer ASSY.
(2) Measure the voltage between the terminals.

Voltage

Inspection terminals	Inspection conditions	Standard value
G12-1 (+B) - chassis ground	IG ON	11 to 14 V

Captions in illustration

*a	Front side of vehicle wiring harness connector (connector for the fuel pump control computer ASSY)

NG → Go to Step 9.

OK

2	Check wiring harness and connector (fuel pump control computer ASSY grounding circuit)

NOTE:
For the inspection procedure and precautions for wiring harnesses and connectors, refer to IN - 36.
(1) Disconnect the connector for the fuel pump control computer ASSY.
(2) Measure the resistance between the terminals.

Resistance (open circuit check)

Inspection terminals	Inspection conditions	Standard value
G12-4 (E) - chassis ground	Always	Less than 1 Ω

NG → Repair or replacement of wiring harness or connector

OK

3	Check wiring harness and connector (engine control computer - fuel pump control computer ASSY)

NOTE:
For the inspection procedure and precautions for wiring harnesses and connectors, refer to IN - 36.
(1) Disconnect the connector for the engine control computer.
(2) Disconnect the connector for the fuel pump control computer ASSY.
(3) Measure the resistance between the terminals. (For terminal arrangement, refer to ES - 36.)

Resistance (open circuit check)

Inspection terminals	Inspection conditions	Standard value
A35-10 (DI) - G12-3 (DI)	Always	Less than 1 Ω

Inspection terminals	Inspection conditions	Standard value
A35-19 (FPC) - G12-2 (FPC)	Always	Less than 1 Ω

Resistance (short circuit check)

Inspection terminals	Inspection conditions	Standard value
A35-10 (DI) and G12-3 (DI) - other terminals and chassis ground	Always	10 k Ωor more
A35-19 (FPC) and G12-2 (FPC) - other terminals and chassis ground	Always	10 k Ωor more

NG → Repair or replacement of wiring harness or connector

OK

4	Inspection of the fuel pump ASSY (low-pressure side)

NOTE:
For the inspection procedure and precautions for wiring harnesses and connectors, refer to IN - 36.

(1) Disconnect the connector for the fuel pump control computer ASSY.
(2) Measure the resistance between the terminals.

Resistance

Inspection terminals	Inspection conditions	Standard value
G12-5 (FP-) - G12-6 (FP+)	Always	0.2 to 3.0 Ω

NOTE:
The normal range of resistances indicates the motor resistance in the fuel pump ASSY.

NG → Go to Step 8.

OK

5	Replacement of the fuel pump control computer ASSY

(1) Replace the fuel pump control computer ASSY. (Refer to FU - 63)

Next

6	Clear DTC

(1) Connect the SSM4 to the DLC3.
(2) Turn the ignition switch to ON.
(3) Turn on the SSM4.
(4) Follow the SSM4 on-screen instructions to clear the DTCs. (Refer to ES - 28)
(5) Turn the ignition switch to OFF, and wait for 30 seconds.

Next

7	Check DTC

(1) Start the engine.
NOTE:
If the engine cannot be started, crank the engine for 15 seconds or more.

(2) Follow the SSM4 on-screen instructions to check the DTC. (Refer to ES - 28)

Result

Result	Go to
No DTC is output	A
P0230 is output.	B

B → Replacement of the engine control computer (Refer to ES - 670)

ES

A

Complete

8	Check wiring harness and connector (fuel pump control computer ASSY - fuel pump ASSY (low-pressure side))

NOTE:
For the inspection procedure and precautions for wiring harnesses and connectors, refer to IN - 36.

(1) Disconnect the connector for the fuel pump control computer ASSY.
(2) Disconnect the connector for the fuel pump ASSY (low pressure side).
(3) Measure the resistance between the terminals.

Resistance (open circuit check)

Inspection terminals	Inspection conditions	Standard value
G12-5(FP-) - G7-4(FP-)	Always	Less than 1 Ω
G12-6(FP+) - G7-3(FP+)	Always	Less than 1 Ω

Resistance (short circuit check)

Inspection terminals	Inspection conditions	Standard value
G12-5 (FP-) and G7-4 (FP-) - other terminals and chassis ground	Always	10 k Ωor more
G12-6 (FP+) and G7-3 (FP+) - other terminals and chassis ground	Always	10 k Ωor more

NG → Repair or replacement of wiring harness or connector

OK

Replacement of the fuel pump ASSY (low-pressure side) (Refer to FU - 47)

9	Relay unit inspection (C/OPEN relay)

(1) Perform a unit inspection on the C/OPEN relay. (Refer to ES - 713)

NG → Relay replacement (C/OPEN relay)

OK

10	Relay operation inspection (C/OPEN relay)

(1) After turning IG to ON, inspect the operation sound of the relay.

Criteria

Inspection items	Inspection conditions	Criteria
C/OPEN relay	IG OFF →IG ON	It makes an operation sound.

NG → Repair or replacement of wiring harness or connector (C/OPEN relay drive circuit)

OK

ES

11	Check wiring harness and connector (C/OPEN relay - fuel pump control computer ASSY - chassis ground)

NOTE:
For the inspection procedure and precautions for wiring harnesses and connectors, refer to IN - 36.
(1) Remove the C/OPEN relay from the engine compartment relay block.
(2) Disconnect the connector for the fuel pump control computer ASSY.
(3) Measure the resistance between the terminals.

Resistance (open circuit check)

Inspection terminals	Inspection conditions	Standard value
G12-1 (+B) - 3 (C/OPEN relay holder)	Always	Less than 1 Ω
2 (C/OPEN relay) - chassis ground	Always	Less than 1 Ω

Resistance (short circuit check)

Inspection terminals	Inspection conditions	Standard value
G12-1 (+B) and 3 (C/OPEN relay holder) - other terminals and chassis ground	Always	10 k Ωor more

CAUTION:
When using tester probes to take measurements at a holder, do not push them hard against the holder. Otherwise the holder could be damaged.

NG → Repair or replacement of wiring harness or connector

OK

Inspection of the ECM power supply system (Refer to ES - 642)

DTC	P0300	Random/Multiple Cylinder Misfire Detected
DTC	P0301	Cylinder 1 Misfire Detected
DTC	P0302	Cylinder 2 Misfire Detected
DTC	P0303	Cylinder 3 Misfire Detected
DTC	P0304	Cylinder 4 Misfire Detected

Circuit description

When a misfire occurs in the engine, hydrocarbon (HC) is released into the exhaust gas. If the HC concentration increases, the exhaust emission level deteriorates. At the same time, the increase in HC concentration causes an increase in catalyst temperature, and may degrade the purification performance of the catalyst. In order to prevent an increase in exhaust emissions and

avoid the thermal deterioration of catalysts, the engine control computer monitors the misfire rate (number of misfires divided by number of ignitions). To monitor misfires, the engine control computer uses the camshaft position sensor and crankshaft position sensor. The crankshaft position sensor is used to measure the crankshaft revolution speed. When the variation of crankshaft revolution speeds exceeds the specified value, the engine control computer determines the vehicle is misfiring, and counts the misfire count (total number of misfires).
The camshaft position sensor is used to identify which cylinders are misfiring.

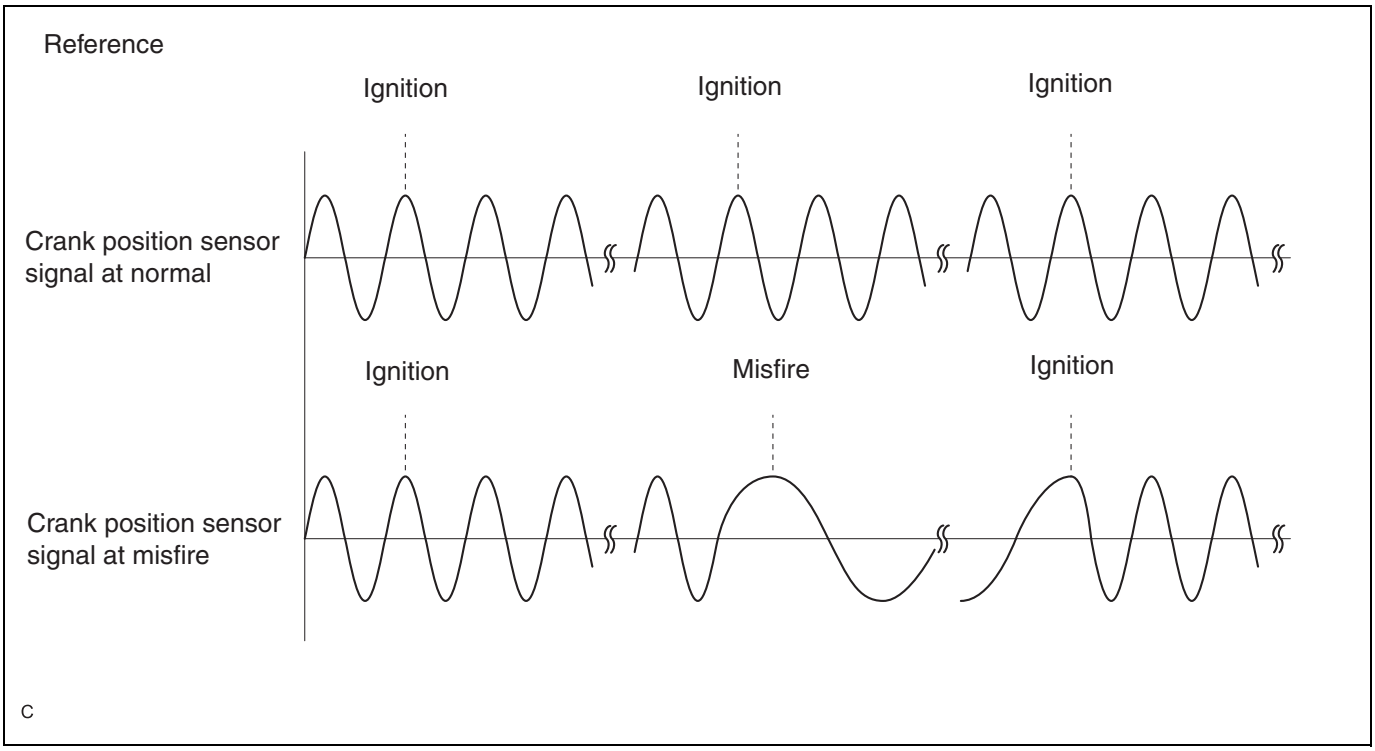

DTC No.	DTC detection conditions	Suspected parts
P0300	When multiple cylinders misfire simultaneously, and one of the following applies (2 trip detection logic): • Occurrence of a misfire that may damage the three-way catalytic converter (MIL flashes) • Occurrence of a misfire that causes the exhaust amount to deteriorate (MIL illuminates)	• Open / short circuit in the engine wiring harnesses • Connectors connection • Vacuum hose connection • Ignition system • Fuel injector ASSY (port injection) • Fuel injector ASSY (cylinder injection) • Fuel pressure • Intake air flow meter SUB-ASSY • E.F.I. water temperature sensor • Compression pressure • Valve timing • PCV valve and hose • PCV hose connection • Intake system • ECM
P0301	When No. 1 cylinder misfires simultaneously, and one of the following applies (2 trip detection logic): • Occurrence of a misfire that may damage the three-way catalytic converter (MIL flashes) • Occurrence of a misfire that causes the exhaust amount to deteriorate (MIL illuminates)	
P0302	When No. 2 cylinder misfires simultaneously, and one of the following applies (2 trip detection logic): • Occurrence of a misfire that may damage the three-way catalytic converter (MIL flashes) • Occurrence of a misfire that causes the exhaust amount to deteriorate (MIL illuminates)	
P0303	When No. 3 cylinder misfires simultaneously, and one of the following applies (2 trip detection logic): • Occurrence of a misfire that may damage the three-way catalytic converter (MIL flashes) • Occurrence of a misfire that causes the exhaust amount to deteriorate (MIL illuminates)	
P0304	When No. 4 cylinder misfires simultaneously, and one of the following applies (2 trip detection logic): • Occurrence of a misfire that may damage the three-way catalytic converter (MIL flashes) • Occurrence of a misfire that causes the exhaust amount to deteriorate (MIL illuminates)	

ES

MONITOR DESCRIPTION

FTP 1.5 times misfire

If excessive misfire that may cause the deterioration of the exhaust amount (38 misfires per 1000 crankshaft rotations) is detected, the ECM turns on the MIL and stores DTC.

(2-trip detection logic)

Misfire with catalyst damage

If misfire that may damage the three-way catalytic converter (1 misfire per 200 crankshaft rotations) is detected, the ECM flashes or illuminates the MIL as follows and stores DTC.

(2-trip detection logic)

- 1st driving cycle: Flashes the MIL immediately after the occurrence of misfire mentioned above and stores the temporary code. If the malfunction is resolved in the same driving cycle, however, the MIL goes off.
- 2nd driving cycle: Flashes the MIL immediately after the recurrence of misfire mentioned above and stores the DTC. If the malfunction is resolved in the same driving cycle, however, the MIL illuminates.

Monitor strategy

Related DTCs	P0300: Multiple cylinder misfire P0301: Cylinder 1 misfire (crankshaft speed fluctuation) P0302: Cylinder 2 misfire (crankshaft speed fluctuation) P0303: Cylinder 3 misfire (crankshaft speed fluctuation) P0304: Cylinder 4 misfire (crankshaft speed fluctuation)
Required Sensors/Components (Main)	Crankshaft position sensor Camshaft position sensor

Required Sensors/Components (Related)	E.F.I. water temperature sensor Intake air temperature sensor Intake air flow meter SUB-ASSY
Frequency of Operation	Continuous
Duration	1000 rotations of crankshaft (FTP 1.5 times misfire) 200 rotations of crankshaft (misfire with catalyst damage)
MIL Operation	FTP 1.5 times misfire: 2 driving cycles Misfire with catalyst damage: Flashes immediately after misfire
Sequence of Operation	None

ES

TYPICAL ENABLING CONDITIONS

Overlap prohibited DTC	P0011, P0021 (VVT intake method (A) for mid-position start) P0030, P0031, P0032 (air/fuel ratio sensor - heater) P0068, P0107, P0108 (Vacuum (MAP) sensor) P0101, P0102, P0103 (intake air flow (MAF) sensor) P0111, P0112, P0113 (Intake Air Temperature (IAT) sensor) P0117, P0118, P0125 (Engine Coolant Temperature (ECT) sensor) P0122, P0123, P0222, P0223 (Throttle position sensor) P0131, P0132 (air/fuel ratio sensor - ECM input voltage) P0134, P2195, P2196 (Air/fuel ratio sensor - Output voltage) P0171, P0172 (fuel system feedback control) P0335, P0336 (crankshaft position sensor) P0340, P0345 (camshaft position sensor - intake VVT) P0365, P0390 (camshaft position sensor - exhaust VVT) P0458, P0459 (Solenoid bulb for the purge control) P0604, P0605 (ECM ROM) P0851, P0852 (neutral position switch) P1160 (throttle return spring) P2101, P2102 (Throttle actuator control motor) P2109 (Throttle position sensor minimum stop) P2119 (Throttle actuator control) P2122, P2123, P2127, P2128 (Accelerator Pedal Position Sensor (APPS) circuit) P2135 (Throttle position sensor (TPS) degree of correlation) P2138 (Accelerator pedal position sensor (APPS) degree of correlation)
Fluctuation in the throttle opening angle for 16 ms	Less than 16.8%
Fuel Cutoff	Control not in progress
Battery Voltage	8V or more
Engine Speed	500 to 7450 r/min
MAP	More than 16.4 kPa {123.0 mmHg, 4.84 inHg, 2.38 psi} (A/T) (varies depending on engine speed and atmospheric pressure) More than 17.5 kPa {131.3 mmHg, 5.17 inHg, 2.54 psi} (M/T) (varies depending on engine speed and atmospheric pressure)
Elapsed time after starting the engine	2 crank shaft revolution or more
When either of the following condition (A) and (B) is established	
A: Engine coolant temperature at engine startup	More than -7°C (19.4°F)
B: Both of the following conditions (b1) and (b2) are established	

(b1) Engine coolant temperature at engine startup	-7°C (19.4°F) or less
(b2) Engine coolant temperature	21°C (69.8°F) or more

TYPICAL MALFUNCTION THRESHOLDS

Observation time for exhaust-related misfires

Misfire rate per 1000 revolutions	1.7% or more

Observation time for misfires with catalyst deterioration (MIL flashes)

Misfire rate per 200 revolutions	5 % or more (varies depending on the engine speed and mass air flow)

ES

Monitoring result

Refer to [Monitor Status Check] (Refer to ES - 24)

CAUTION:

Even though multiple DTCs for identifying cylinders (P0301, P0302, P0303, P0304) are recorded, if the DTC for random cylinder misfires (P0300) is not recorded, it indicates that the misfires at each cylinder are detected and recorded at different times.

Circuit figure

- For the intake air flow meter SUB-ASSY system, refer to ES - 169.
- For the ignition coil ASSY system, refer to ES - 320.
- For the fuel injector ASSY (port injection side) system, refer to ES - 279.
- For the fuel injector ASSY (direct injection side) system, refer to ES - 397.

Description of functions

Test drive

Perform test drive to check if the DTC recurs.

NOTE:

Both of test drive A and B can recur the diagnostic code.

Test drive A

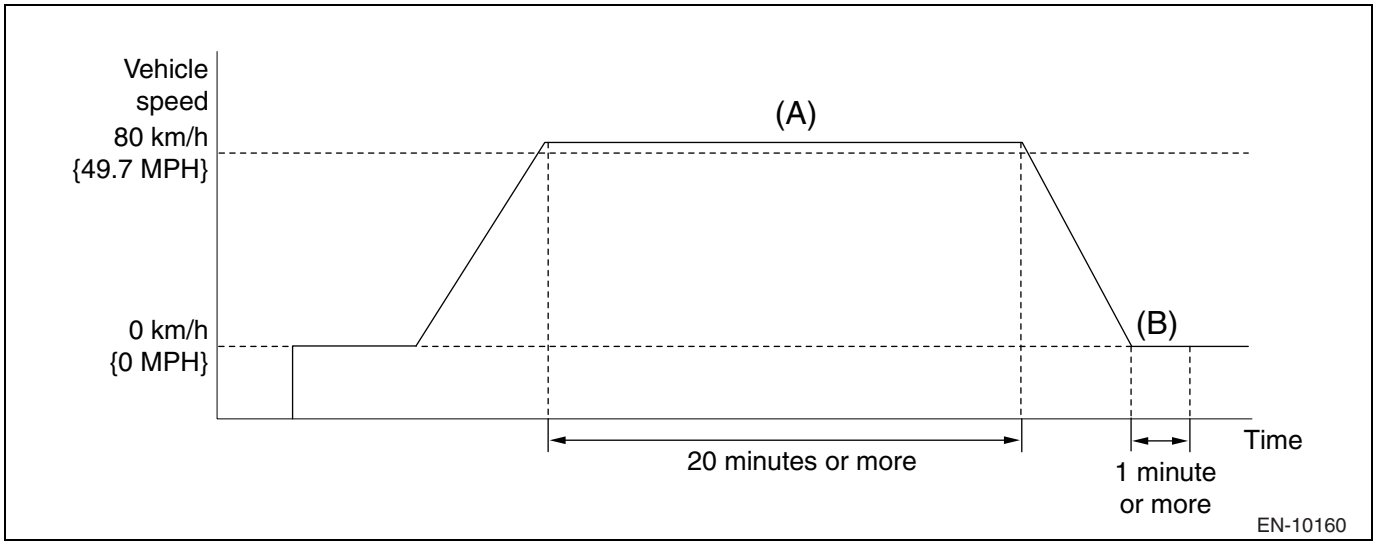

1. Connect the SSM4 to the DLC3.
2. Turn the ignition switch to ON.
3. Turn on the SSM4.
4. Follow the SSM4 on-screen instructions to clear the DTCs. (Refer to ES - 28)
5. Turn the ignition switch to OFF, and wait for 30 seconds.
6. Turn the ignition switch to ON.
7. Turn on the SSM4.
8. Start the engine and let it warm up until the engine coolant temperature stabilizes. (at 75°C {167°F} or more).
9. Perform driving test as follows.

WARNING:
When performing this driving test, always observe the applicable traffic laws such as the speed limit.
(a) Drive at 80 km/h {49.7 MPH} or more for 20 minutes or more. (A)
(b) Stop the vehicle.
(c) Idle the engine for 1 minute or more. (B)
10. Follow the SSM4 on-screen instructions to check the DTC. (Refer to ES - 28)

Test drive B

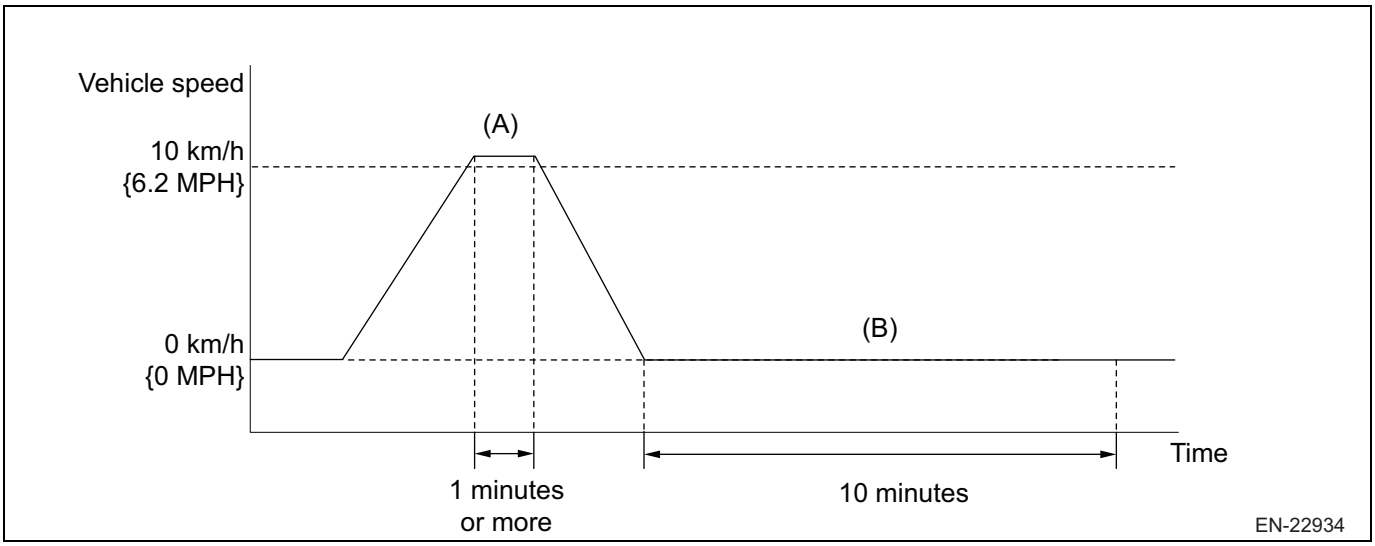

1. Connect the SSM4 to the DLC3.
2. Turn the ignition switch to ON.
3. Turn on the SSM4.
4. Follow the SSM4 on-screen instructions to clear the DTCs. (Refer to ES - 28)
5. Turn the ignition switch to OFF, and wait for 30 seconds.
6. Turn the ignition switch to ON.
7. Turn on the SSM4.
8. Start the engine.
9. Perform driving test as follows.
   WARNING:
   When performing this driving test, always observe the applicable traffic laws such as the speed limit.
   (a) Drive at 10 km/h {6.2 MPH} or more for 1 minute or more. (A)
   (b) Stop the vehicle.
   (c) Idle the engine for 10 minutes or more. (B)
10. Follow the SSM4 on-screen instructions to check the DTC. (Refer to ES - 28)

Inspection steps

NOTE:

- If any DTCs other than misfire-related DTCs are also recorded, repair the latter ones first.
- Read the freeze frame data using the SSM4. A part of the engine running conditions under which the engine trouble occurred is recorded in the freeze frame data, which is useful for troubleshooting.
- If the phenomenon cannot be confirmed, reproduce the conditions in the freeze frame data.
- If either the [Short term fuel trim B1] or the [Long term fuel trim B1] of the freeze frame data are outside a ±20 % range, the air/fuel ratio may be rich (-20 % or less) or lean (+20 % or more).
- If the [Coolant Temp.] of the freeze frame data is less than 80°C {176°F}, misfires may be occurring only when the engine is warmed up.
- If the misfire cannot be reproduced, a lack of fuel, the use of an incorrect fuel, or dirt on the spark plug may be the cause.
- Once repaired, check the values from [Cylinder #1 Misfire Count] to [Cylinder #4 Misfire Count].
- If the wheel balance of the drive wheels is so off-balance that it causes body vibration, DTCs for misfires may be detected.
- Once repaired, perform test drive to check that DTCs are not output.
- By referring to following contents in the freeze frame data, you can estimate which cylinder was misfiring to what degree.
  – [Cylinder #1 Misfire Count] to [Cylinder #4 Misfire Count] for each cylinder

1	Read DTC

(1) Connect the SSM4 to the DLC3.
(2) Turn the ignition switch to ON.
(3) Follow the SSM4 on-screen instructions to check the DTCs. (Refer to ES - 28)

Result

Result	Go to
P0300, P0301, P0302, P0303, or P0304 is output.	A
P0300, P0301, P0302, P0303, or P0304, and other DTCs are output.	B

NOTE:
If any DTCs other than P0300, P0301, P0302, P0303, or P0304 are output, troubleshoot them first.

B → To corresponding DTC chart (refer to ES - 12)

A

2	Inspection of the PCV hose

(1) Check the PCV hose for poor connections and damage.
Criteria: The PCV hose is properly connected and is not damaged.

NG → Repair or replacement of the PCV hose

OK

3	Inspection of the fuel injector ASSY (port injection side)

(1) Select the following menu items using the SSM4. : [Each System] / [Engine Control System] / [Work Support] / [Active Test] / [Injection Mode Change] / [Port injection]
NOTE:
The active test has restrictions.
(2) Idle the engine.
(3) Check the values of [Cylinder #1 Misfire Count] through [Cylinder #4 Misfire Count] in the data display while performing the active test.

Result

Active test Injection mode change	Data display [Cylinder #1 Misfire Count] to [Cylinder #4 Misfire Count]	Go to
Port injection	Misfiring occurs mainly in 1 or 2 cylinders	A
	Misfiring scatters across 3 or more cylinders	A
	Misfiring count is not output	B

B → Go to Step 14.

A

4	Inspection of the fuel injector ASSY (cylinder injection side)

(1) Connect the SSM4 to the DLC3.
(2) Select the following menu items using the SSM4. : [Each System] / [Engine Control System] / [Work Support] / [Active Test] / [Injection Mode Change] / [Cylinder injection]
NOTE:
The active test has restrictions.
(3) Idle the engine.
(4) Check the values of [Cylinder #1 Misfire Count] through [Cylinder #4 Misfire Count] in the data display while performing the active test.

ES

Result

Item name [Cylinder #1 Misfire Count] to [Cylinder #4 Misfire Count]		Go to
Port injection side	Direct injection side	
Misfiring occurs mainly in 1 or 2 cylinders	Misfiring occurs mainly in 1 or 2 cylinders	A
Misfiring scatters across 3 or more cylinders	Misfiring scatters across 3 or more cylinders	B
Misfiring occurs mainly in 1 or 2 cylinders	Misfiring count is not output	C
Misfiring scatters across 3 or more cylinders	Misfiring count is not output	D

B → Go to Step 8.

C → Replacement of the fuel injector ASSY (port injection side) (Refer to FU - 21)

D → Go to Step 12.

A

5	Spark plug inspection

(1) Inspect the spark plug. (Refer to ES - 658)

NG → Spark plug replacement (Refer to ES - 687)

OK

6	Spark Inspection

(1) Perform the spark inspection. (Refer to ES - 652)
NOTE:
If no malfunction is found in the spark inspection, proceed to the next step.

Next

7	Compression inspection

(1) Inspect the compression. (Refer to EM - 2)

NG → Engine inspection to determine the cause of the low compression

OK

Replacement of the engine control computer (Refer to ES - 670)

8	Intake system inspection

(1) Inspect the intake system. (Refer to IE - 4)

NG → Repair or replacement of intake system

OK

9	PCV valve inspection

(1) PCV valve inspection
(2) Check deformation, cracks and other damages of the PCV valve.

NG → Repair or replace the PCV valve. (Refer to EC - 21)

OK

10	PCV hose inspection

(1) PCV hose inspection
(2) Check deformation, cracks and other damages of the PCV hose.

NG → Repair or replace the PCV hose. (Refer to EC - 21)

OK

11	Reading of SSM4 data ([Coolant Temp.])

(1) Connect the SSM4 to the DLC3.
(2) Select the following menu items using the SSM4. : [Each System] / [Engine Control System] / [Data monitor] / [Coolant Temp.]
(3) Read [Coolant Temp.] both when the engine is cold and warmed up.

Standard value

Item name	Inspection conditions	Standard value
[Coolant Temp.]	Cold start →After fully warmed up	Gradual increase
[Coolant Temp.]	After fully warmed up	75 to 100°C {167 to 212°F}

NG → Replacement of E.F.I. water temperature sensor (Refer to ES - 695)

OK

12	Reading of SSM4 data ([Mass Air Flow])

(1) Connect the SSM4 to the DLC3.
(2) Turn the ignition switch to ON.
(3) Turn ON the main switch of the SSM4.

(4) Select the following menu items using the SSM4. : [Each System] / [Engine Control System] / [Data monitor] / [Mass Air Flow]
(5) Read the [Mass Air Flow] displayed on the SSM4.

Standard value

Item name	Inspection conditions	Standard value
[Mass Air Flow]	After the engine is warmed up, when running at 3000 r/min (Air conditioning OFF, shift lever in the N position)	8 to 13 g/s

NG → Go to Step 23.

OK

13	Valve timing inspection

(1) Check the valve timing. (Refer to EM - 13)

Result

Result	Go to
Malfunction	A
Normal	B

B → Go to Step 23.

A

Valve timing adjustment (Refer to EM - 2)

14	Fuel pressure inspection (low-pressure side)

(1) Check the fuel pressure (low-pressure side). (Refer to FU - 9)

NG → Go to Step 13.

OK

Replacement of the fuel injector ASSY (port injection side) (Refer to FU - 21)

15	Unit inspection of the fuel pump ASSY (low-pressure side)

(1) Perform a unit inspection on the fuel pump (low-pressure side) (Refer to FU - 56)

NG → Replacement of the fuel pump ASSY (low-pressure side) (Refer to FU - 47)

OK

Check and replacement for the fuel system

16	Inspection of the fuel injector ASSY (cylinder injection side)

(1) Connect the SSM4 to the DLC3.
(2) Select the following menu items using the SSM4. : [Each System] / [Engine Control System] / [Work Support] / [Active Test] / [Injection Mode Change] / [Cylinder injection]
NOTE:
The active test has restrictions.
(3) Idle the engine.
(4) Check the values of [Cylinder #1 Misfire Count] through [Cylinder #4 Misfire Count] in the data monitor while performing the active test.

Result

Item name [Cylinder #1 Misfire Count] to [Cylinder #4 Misfire Count]		Go to
Port injection side	Direct injection side	
Misfiring count is not output	There is a misfiring count	A
Misfiring count is not output	Misfiring count is not output	B

B → Go to Step 15.

A

Replacement of fuel injector ASSY (direct injection side) (Refer to FU - 31)

17	Reading of SSM4 data

(1) Connect the SSM4 to the DLC3.
(2) Select the following menu items using the SSM4. : [Each System] / [Engine Control System] / [Data monitor] / [Cylinder #1 Misfire Count], [Cylinder #2 Misfire Count], [Cylinder #3 Misfire Count], [Cylinder #4 Misfire Count], [Injection Mode(D4-S)]
(3) Check the [Cylinder #1 Misfire Count] to [Cylinder #4 Misfire Count], and [Injection Mode(D4-S)] displayed on the SSM4.

Result

Item name		Go to
[Cylinder #1 Misfire Count] to [Cylinder #4 Misfire Count]	[Injection Mode(D4-S)]	
Misfiring count is not output	-	A
Misfiring occurs mainly in 1 or 2 cylinders	[Port] or [Controlled injection]	B
Misfiring scatters across 3 or more cylinders	[Port] or [Controlled injection]	C
There is a misfiring count	[Cylinder injection]	D

B → Go to Step 16.

C → Go to Step 19.

D → Replacement of fuel injector ASSY (direct injection side) (Refer to FU - 31)

A

Inspection for problems that do not normally occur (Refer to ES - 28)

18	Spark plug inspection

(1) Inspect the spark plug. (Refer to ES - 658)

NG → Spark plug replacement (Refer to ES - 687)

OK

19	Spark Inspection

(1) Perform the spark inspection. (Refer to ES - 652)
NOTE:
If no malfunction is found in the spark inspection, proceed to the next step.

OK

20	Compression inspection

(1) Inspect the compression. (Refer to EM - 2)

NG → Engine inspection to determine the cause of the low compression

OK

Replacement of the engine control computer (Refer to ES - 670)

21	Intake system inspection

(1) Inspect the intake system. (Refer to IE - 4)

NG → Repair or replacement of intake system

OK

22	Reading of SSM4 data ([Coolant Temp.])

(1) Connect the SSM4 to the DLC3.
(2) Select the following menu items using the SSM4. : [Each System] / [Engine Control System] / [Data monitor] / [Coolant Temp.]
(3) Read [Coolant Temp.] both when the engine is cold and warmed up.

Standard value

Item name	Inspection conditions	Standard value
[Coolant Temp.]	Cold start →After fully warmed up	Gradual increase
[Coolant Temp.]	After fully warmed up	75 to 100°C {167 to 212°F}

NG → Replacement of E.F.I. water temperature sensor (Refer to ES - 695)

OK

23	Reading of SSM4 data ([Mass Air Flow])

(1) Connect the SSM4 to the DLC3.
(2) Turn the ignition switch to ON.
(3) Turn ON the main switch of the SSM4.
(4) Select the following menu items using the SSM4. : [Each System] / [Engine Control System] / [Data monitor] / [Mass Air Flow]
(5) Read the [Mass Air Flow] displayed on the SSM4.

Standard value

Item name	Inspection conditions	Standard value
[Mass Air Flow]	After the engine is warmed up, when running at 3000 r/min (Air conditioning OFF, shift lever in the N position)	8 to 13 g/s

NG → Go to Step 23.

OK

24	Valve timing inspection

(1) Check the valve timing. (Refer to EM - 13)

NG → Valve timing adjustment (Refer to EM - 2)

OK

25	Wiring harness and connector check

(1) Check the connection state and fit of the wiring harnesses and connectors between the intake air flow meter SUB-ASSY and engine control computer. (Refer to IN - 36)
NOTE:
If there are poor connections or poor fits, replace or repair them.

Next

26	Clear DTC

(1) Connect the SSM4 to the DLC3.
(2) Turn the ignition switch to ON, and follow the SSM4 on-screen display to clear the DTC. (Refer to ES - 28)
(3) Turn the ignition switch to OFF, and wait for 30 seconds.

Next

27	Perform test drive for operation check

(1) Start the engine, turn off all the accessory switches, and wait until the engine warms up and the coolant temperature stabilizes. (at 75°C {167°F} or more)
(2) Perform test drive. (Refer to "Test drive" under "Description of functions")
WARNING:
When performing this driving test, always observe the applicable traffic laws such as the speed limit.
(3) Check the results.

ES

Result

Result	Go to
Malfunction	A
Normal	B

B → Complete

A

28	Check wiring harness and connector (engine control computer - intake air flow meter SUB-ASSY)

NOTE:
For the inspection procedure and precautions for wiring harnesses and connectors, refer to IN - 36.
(1) Disconnect the connector for the engine control computer.
(2) Disconnect the connector of the intake air flow meter SUB-ASSY.
(3) Measure the resistance between the terminals. (For terminal arrangement, refer to ES - 36.)

Resistance (open circuit check)

Inspection terminals	Inspection conditions	Standard value
A33-22 (VG) - C16-5 (VG)	Always	Less than 1 Ω
A33-29 (E2G) - C16-4 (E2G)	Always	Less than 1 Ω

Resistance (short circuit check)

Inspection terminals	Inspection conditions	Standard value
A33-22 (VG) and C16-5 (VG) - other terminals and chassis ground	Always	10 k Ωor more
A33-29 (E2G) and C16-4 (E2G) - other terminals and chassis ground	Always	10 k Ωor more

NG → Repair or replacement of wiring harness or connector

OK

29	Replacement of the intake air flow meter SUB-ASSY

(1) Replace the intake air flow meter SUB-ASSY. (Refer to ES - 675)
NOTE:
If the results of the inspection from steps 10 and 21 are normal, proceed to the next step without replacing the intake air flow meter SUB-ASSY.

Next

30	Clear DTC

(1) Connect the SSM4 to the DLC3.
(2) Turn the ignition switch to ON, and follow the SSM4 on-screen display to clear the DTC. (Refer to ES - 28)
(3) Turn the ignition switch to OFF, and wait for 30 seconds.

Next

31	Perform test drive for operation check

(1) Start the engine, turn off all the accessory switches, and wait until the engine warms up and the coolant temperature stabilizes. (at 75°C {167°F} or more)
(2) Perform test drive. (Refer to "Test drive" under "Description of functions")
WARNING:
When performing this driving test, always observe the applicable traffic laws such as the speed limit.
(3) Check the results.

Result

Result	Go to
Normal	A
Malfunction	B

B → Replacement of the engine control computer (Refer to ES - 670)

A

Complete

DTC	P0327	Knock Sensor 1 Circuit Low Input (Bank 1 or Single Sensor)
DTC	P0328	Knock Sensor 1 Circuit High Input (Bank 1 or Single Sensor)
DTC	P0332	Knock Sensor 2 Circuit Low (Bank 2)
DTC	P0333	Knock Sensor 2 Circuit High (Bank 2)

Circuit description
The knock control sensor is installed on the cylinder block, and detects engine knocking. Inside the knock control sensor, there is a sensor that generates voltage when knocking vibrates and deforms the cylinder block. When knocking occurs, the engine control computer delays ignition timing, and suppresses knocking.
NOTE:
When either of these DTCs is stored, the engine control computer enters fail-safe mode. During fail-safe mode operation, the engine control computer delays ignition timing. The engine control computer continues operation in fail-safe mode until the vehicle is turned to IG OFF.

DTC No.	DTC detection conditions	Suspected parts
P0327	The knock sensor voltage is less than 0.154 V for 1 second or more (bank 1). (1 trips detection logic)	• Open / short circuit in the knock sensor (bank 1) • Knock sensor (bank 1) • ECM
P0328	The knock sensor voltage 4.838 V or more for 1 second or more (bank 1). (1 trips detection logic)	
P0332	The knock sensor voltage is less than 0.154 V for 1 second or more (bank 2). (1 trips detection logic)	• Open circuit in the knock sensor (bank 2) • Knock sensor (bank 2) • ECM
P0333	The knock sensor voltage 4.838 V or more for 1 second or more (bank 2). (1 trips detection logic)	

ES

MONITOR DESCRIPTION

If the output voltage sent from the knock sensor stays high or low for 1 second or more, the ECM interprets that as trouble in the sensor circuit, and records a DTC.

Monitor strategy

Related DTCs	P0327: Knock sensor range check (Low voltage) (Bank 1) P0328: Knock sensor range check (High voltage) (Bank 1) P0332: Knock sensor range check (Low voltage) (Bank 2) P0333: Knock sensor range check (High voltage) (Bank 2)
Required Sensors/Components (Main)	Knock sensor
Required Sensors/Components (Related)	-
Frequency of Operation	Continuous
Duration	1 second
MIL Operation	Immediately after
Sequence of Operation	None

TYPICAL ENABLING CONDITIONS

Overlap prohibited DTC	None

TYPICAL MALFUNCTION THRESHOLDS

P0327, P0332

Knock sensor voltage	Less than 0.154V

P0328, P0333

Knock sensor voltage	4.838V or more

Circuit figure

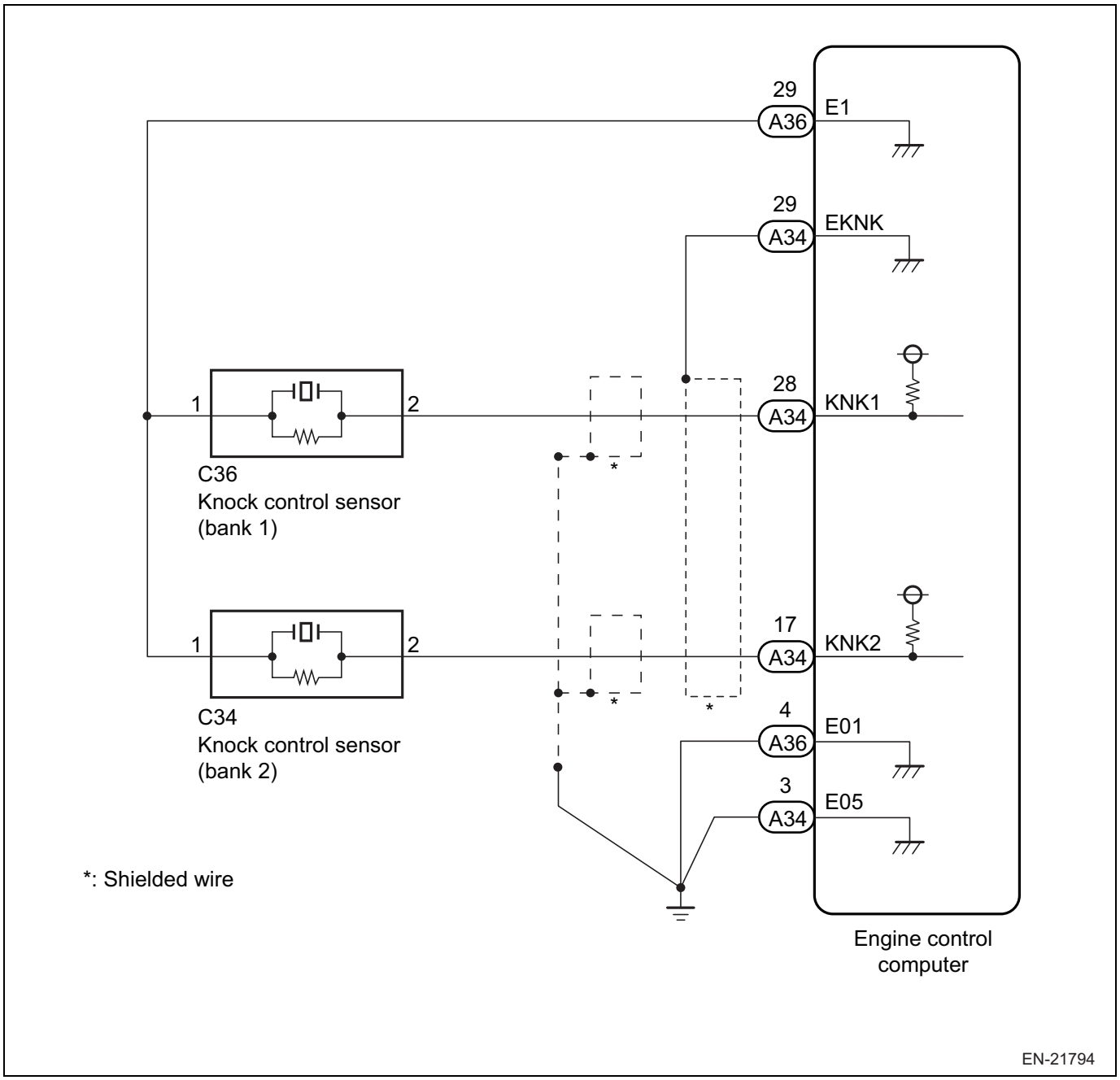

Description of functions

Test drive

Perform test drive to check if the DTC recurs.

1. Connect the SSM4 to the DLC3.
2. Turn the ignition switch to ON.
3. Turn on the SSM4.
4. Follow the SSM4 on-screen instructions to clear the DTCs. (Refer to ES - 28)
5. Turn the ignition switch to OFF, and wait for 30 seconds.
6. Turn the ignition switch to ON.
7. Turn on the SSM4.
8. Start the engine.
   NOTE:
   If the engine cannot be started, crank the engine for 10 seconds or more.
9. Idle the engine for 20 seconds or more.

10. Follow the SSM4 on-screen instructions to check the DTC. (Refer to ES - 28)

Inspection steps

NOTE:

- Read the freeze frame data using the SSM4. A part of the engine running conditions under which the engine trouble occurred is recorded in the freeze frame data, which is useful for troubleshooting.
- Bank 1 shows the side where No. 1 cylinder is located.
- Bank 2 shows the side where No. 2 cylinder is located.

ES

1	Check wiring harness and connector (voltage of terminals KNK1, KNK2)

NOTE:

For the inspection procedure and precautions for wiring harnesses and connectors, refer to IN - 36.

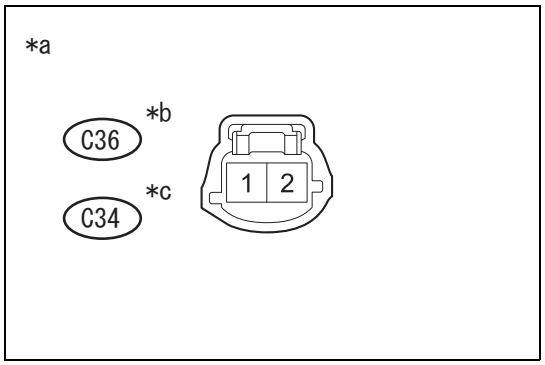

(1) Disconnect the connector for the knock control sensor (bank 1 or bank 2).
(2) Measure the voltage between the terminals.

Voltage

Inspection terminals	Inspection conditions	Standard value
C36-2 - C36-1	IG ON	2.4 to 2.6 V
C34-2 - C34-1	IG ON	2.4 to 2.6 V

Captions in illustration

*a	Front side of vehicle wiring harness connector (knock control sensor connector)
*b	Bank 1
*c	Bank 2

NG → Go to Step 5.

OK

2	Unit inspection of the knock control sensor

(1) Perform a unit inspection on the knock control sensor. (Refer to ES - 702)

NG → Replacement of the knock control sensor (Refer to ES - 700)

OK

3	Clear DTC

(1) Connect the SSM4 to the DLC3.
(2) Turn the ignition switch to ON.
(3) Turn on the SSM4.
(4) Follow the SSM4 on-screen instructions to clear the DTCs. (Refer to ES - 28)
(5) Turn the ignition switch to OFF, and wait for 30 seconds.

Next

4	Perform test drive for operation check

(1) Perform test drive. (Refer to "Test drive" under "Description of functions")
(2) Follow the SSM4 on-screen instructions to check the DTC. (Refer to ES - 28)

Result

Result	Go to
No DTC is output	A
P0327, P0328, P0332, or P0333 is output.	B

B → Replacement of the engine control computer (Refer to ES - 670)

A

Inspection for problems that do not normally occur (Refer to ES - 28)

5	Check wiring harness and connector (knock control sensor - engine control computer)

NOTE:
For the inspection procedure and precautions for wiring harnesses and connectors, refer to IN - 36.
(1) Disconnect the connector for the engine control computer.
(2) Disconnect the connector for the knock control sensor (bank 1 or bank 2).
(3) Measure the resistance between the terminals. (For terminal arrangement, refer to ES - 36.)

Resistance (open circuit check)

Inspection terminals	Inspection conditions	Standard value
A34-28 (KNK1) - C36-2	Always	Less than 1 Ω
A34-17 (KNK2) - C34-2	Always	Less than 1 Ω
A36-29 (E1) - C36-1	Always	Less than 1 Ω
A36-29(E1) - C34-1	Always	Less than 1 Ω

Resistance (short circuit check)

Inspection terminals	Inspection conditions	Standard value
A34-28 (KNK1) and C36-2 - other terminals and chassis ground	Always	10 k Ωor more
A34-17 (KNK2) and C34-2 - other terminals and chassis ground	Always	10 k Ωor more
A36-29 (E1) and C36-1 - other terminals and chassis ground	Always	10 k Ωor more
A36-29 (E1) and C34-1 - other terminals and chassis ground	Always	10 k Ωor more

NG → Repair or replacement of wiring harness or connector

OK

6	Clear DTC

(1) Connect the SSM4 to the DLC3.
(2) Turn the ignition switch to ON.
(3) Turn on the SSM4.
(4) Follow the SSM4 on-screen instructions to clear the DTCs. (Refer to ES - 28)
(5) Turn the ignition switch to OFF, and wait for 30 seconds.

ES

Next

7	Perform test drive for operation check

(1) Perform test drive. (Refer to "Test drive" under "Description of functions")
(2) Follow the SSM4 on-screen instructions to check the DTC. (Refer to ES - 28)

Result

Result	Go to
No DTC is output	A
P0327, P0328, P0332, or P0333 is output.	B

B → Replacement of the engine control computer (Refer to ES - 670)

A

Inspection for problems that do not normally occur (Refer to ES - 28)

DTC	P0335	Crankshaft Position Sensor "A" Circuit

DTC	P0336	Crank angle sensor characteristic

Circuit description

Crankshaft position sensor system consists of crankshaft angle sensor plate No. 1 and pickup coil. The crankshaft angle sensor plate, which has 30 teeth (protrusion) and 3 missing teeth (gap) for detecting the top dead center, is installed on the crankshaft. As the engine revolves once, the crankshaft position sensor outputs 30 signals. The engine control computer detects the crankshaft angle and engine speed through the crankshaft position sensor signal.

DTC No.	DTC detection conditions	Suspected parts
P0335	The crankshaft position sensor is not sent to the ECM after three or more seconds of cranking. (1 trips detection logic)	• Open/short condition in crankshaft position sensor circuit • Crankshaft position sensor • Crankshaft angle sensor plate (Crankshaft SUB-ASSY) • ECM
P0336	The count crank position sensor signal for one crankshaft revolution has a count that is not 30. (2 trips detection logic)	• Crankshaft position sensor • Crankshaft angle sensor plate (Crankshaft SUB-ASSY) • ECM

MONITOR DESCRIPTION

Regardless of crankshaft rotation, the ECM stores DTCs when there is no signal from the crankshaft position sensor.

Monitor strategy

Related DTCs	P0335: Crankshaft position sensor circuit continuity P0336: Crankshaft position sensor rationality check
Required Sensors/Components (Main)	Crankshaft position sensor
Required Sensors/Components (Related)	Camshaft position sensor
Frequency of Operation	Continuous
Duration	3 seconds: P0335 10 rotations: P0336
MIL Operation	Immediately after: P0335 2 driving cycles: P0336
Sequence of Operation	None

TYPICAL ENABLING CONDITIONS

P0335

Overlap prohibited DTC	P0512 (Push start system starter switch circuit) P0616, P0615 (Starter Switch)
Battery Voltage	8V or more

P0336

Overlap prohibited DTC	P0122, P0123, P0222, P0223 (Throttle position sensor) P0335 (crankshaft position sensor) P0604, P0605 (ECM ROM), P0606 (ETCHIC) P1160 (throttle return spring) P2101, P2102 (Throttle actuator control motor) P2109 (Throttle position sensor minimum stop) P2119 (Throttle actuator control) P2122, P2123, P2127, P2128 (Accelerator Pedal Position Sensor (APPS) circuit) P2135 (Throttle position sensor (TPS) degree of correlation) P2138 (Accelerator pedal position sensor (APPS) degree of correlation)
Battery Voltage	8V or more

TYPICAL MALFUNCTION THRESHOLDS

P0335

Crankshaft position sensor signal (during cranking)	No signal

P0336

Crankshaft position sensor signal for each single revolution	The count is not 30

Circuit figure

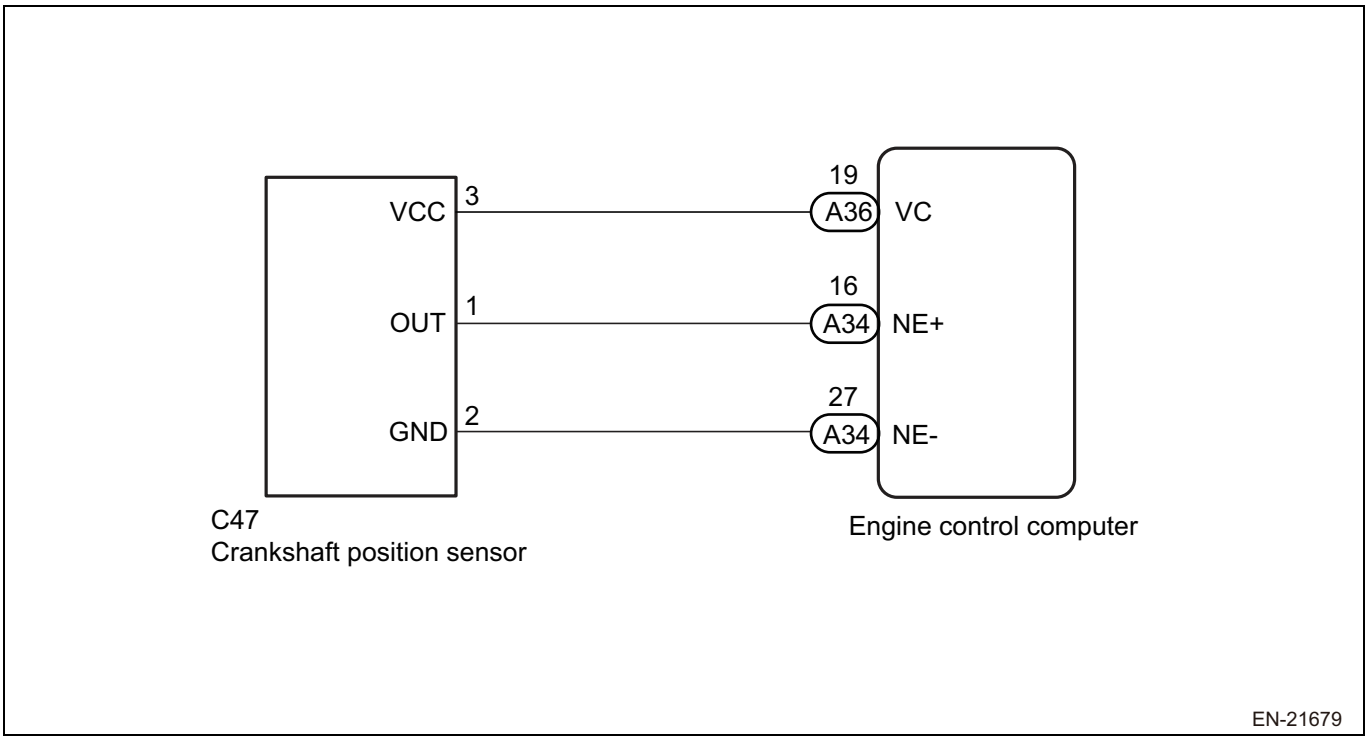

Description of functions

Test drive

Perform test drive to check if the DTC recurs.

1. Connect the SSM4 to the DLC3.
2. Turn the ignition switch to ON.
3. Turn on the SSM4.
4. Follow the SSM4 on-screen instructions to clear the DTCs. (Refer to ES - 28)
5. Turn the ignition switch to OFF, and wait for 30 seconds.
6. Turn the ignition switch to ON.
7. Turn on the SSM4.
8. Start the engine.
   NOTE:
   If the engine cannot be started, crank the engine for 10 seconds or more.
9. Idle the engine for 20 seconds or more.
10. Follow the SSM4 on-screen instructions to check the DTCs. (Refer to ES - 28)

Inspection steps

NOTE:

- Read the freeze frame data using the SSM4. A part of the engine running conditions under which the engine trouble occurred is recorded in the freeze frame data, which is useful for troubleshooting.
- Troubleshoot DTC P0335 and P0336 first. If any fault is not found, mechanical systems may be faulty.

1	Reading of SSM4 data ([Engine Speed])

(1) Connect the SSM4 to the DLC3.
(2) Turn the ignition switch to ON.
(3) Turn on the SSM4.
(4) Start the engine.
(5) Select the following menu items using the SSM4. : [Each System] / [Engine Control System] / [Data monitor] / [Engine Speed]
(6) Read the value of [Engine Speed] while the engine is running.

Criteria: Values corresponding to the engine speed are output continuously.

Result

Result	Go to
Malfunction	A
Normal	B

NOTE:
- Check the engine speed on the line graph display.
- If the engine cannot be started, check the speed during cranking.
- If the engine speed is zero, open or short circuit in the crankshaft position sensor may occur.

B → Inspection for problems that do not normally occur (Refer to ES - 28)

A

2	Crankshaft position sensor unit inspection

(1) Perform crankshaft position sensor unit inspection. (Refer to ES - 681)

NG → Replacement of crankshaft position sensor (Refer to ES - 681)

OK

3	Check wiring harness and connector (engine control computer - crankshaft position sensor)

NOTE:
For the inspection procedure and precautions for wiring harnesses and connectors, refer to IN - 36.

(1) Disconnect the connector for the engine control computer.
(2) Disconnect the crankshaft position sensor connector.
(3) Measure the resistance between the terminals. (For terminal arrangement, refer to ES - 36.)

Resistance (open circuit check)

Inspection terminals	Inspection conditions	Standard value
A34-16(NE+) - C47-1(OUT)	Always	Less than 1 Ω
A34-27(NE-) - C47-2(GND)	Always	Less than 1 Ω
A36-19(VC) - C47-3(VCC)	Always	Less than 1 Ω

Resistance (short circuit check)

Inspection terminals	Inspection conditions	Standard value
A34-16 (NE+) and C47-1 (OUT) - other terminals and chassis ground	Always	10 k Ωor more
A34-27 (NE-) and C47-2 (GND) - other terminals and chassis ground	Always	10 k Ωor more
A36-19(VC) - C47-3(VCC)	Always	10 k Ωor more

NG → Repair or replacement of wiring harness or connector

OK

4	Sensor installation area check

(1) Check the tightening condition of the crankshaft position sensor bolt and installation condition of the sensor.
Criteria: Properly installed.

NG → Repair or replacement of sensor installation area

OK

ES

5	Unit inspection of crankshaft angle sensor plate No.1

(1) Check the gaps and protrusion of the crankshaft angle sensor plate No. 1, and check the installation condition of the plate. (Refer to EM - 53)
Criteria: The gaps and protrusion section are normal and the plate is properly installed.

NG → Replacement of crankshaft angle sensor plate No. 1 (Refer to EM - 53)

OK

6	Crankshaft position sensor replacement

(1) Replace the crankshaft position sensor. (Refer to ES - 681)

Next

7	Clear DTC

(1) Connect the SSM4 to the DLC3.
(2) Turn the ignition switch to ON.
(3) Turn on the SSM4.
(4) Follow the SSM4 on-screen instructions to clear the DTCs. (Refer to ES - 28)
(5) Turn the ignition switch to OFF, and wait for 30 seconds.

Next

8	Perform test drive for operation check

(1) Perform test drive. (Refer to "Test drive" under "Description of functions")
(2) Follow the SSM4 on-screen instructions to check the DTC. (Refer to ES - 28)

Result

Result	Go to
No DTC is output	A
P0335 or P0336 is output.	B

B → Replacement of the engine control computer (Refer to ES - 670)

A

Complete

DTC	P0340	Camshaft Position Sensor "A" Circuit (Bank 1 or Single Sensor)
DTC	P0341	Camshaft Position Sensor "A" Circuit Range/Performance (Bank 1)
DTC	P0345	Camshaft Position Sensor "A" Circuit (Bank 2)
DTC	P0346	Camshaft Position Sensor "A" Circuit Range/Performance (Bank 2)

ES

Circuit description

VVT system (intake side) consists of timing rotor integrated into the intake cam sprocket and the magnetic resistance element (MRE) type camshaft position sensor. When the timing rotor (camshaft timing gear) consisting of three protruded sections turns, the magnetic vector (direction of the magnetic field) applied to the MRE (magnetic resistance element) inside the camshaft position sensor changes. This causes a change in the internal resistance of the MRE. This change in resistance is converted to voltage and rectified to square waveform where Hi is approx. 4.8 V and Lo is approx. 0.8 V. The actual camshaft position is detected through this and output to the engine control computer.

DTC No.	DTC detection conditions	Suspected parts
P0340	When any of the following conditions is met (1 trip detection logic): • There is no output from the intake side camshaft position sensor when the crankshaft rotates by 1.5 turns. (bank 1) • The intake side camshaft position sensor is not sent to the ECM after three or more seconds of cranking. (bank 1)	• Intake side camshaft position sensor (bank 1) circuit open/shorted • Intake side camshaft position sensor (bank 1) • Intake cam sprocket (bank 1) • Intake camshaft timing chain teeth skipping (bank 1) • ECM
P0341	The intake side camshaft position sensor signal for two crankshaft revolutions has a count that is not 3. (bank 1) (1 trips detection logic)	
P0345	When any of the following conditions is met (1 trip detection logic): • There is no output from the intake side camshaft position sensor when the crankshaft rotates by 1.5 turns. (bank 2) • The intake side camshaft position sensor is not sent to the ECM after three or more seconds of cranking. (bank 2)	• Intake side camshaft position sensor (bank 2) circuit open/shorted • Intake side camshaft position sensor (bank 2) • Intake cam sprocket (bank 2) • Intake camshaft timing chain teeth skipping (bank 2) • ECM
P0346	The count of camshaft position sensor signal per 1 crankshaft rotation is not 3. (bank 2) (1 trips detection logic)	

MONITOR DESCRIPTION

If no signal is sent from the camshaft position sensor while the engine is running, or the rotation of the camshaft and crankshaft is not in sync, the ECM interprets this as being a sensor malfunction.

Monitor strategy

Related DTCs	P0340: Camshaft Position Sensor“A” Circuit (Bank 1 or Single Sensor) P0341: Camshaft Position Sensor“A ”Circuit Rang/Performance (Bank 1 or Single Sensor) P0345: Camshaft Position Sensor“A” Circuit (Bank 2) P0346: Camshaft Position Sensor“A” Circuit Range/Performance (Bank 2)
Required Sensors/Components (Main)	Camshaft position sensor (banks 1 and 2)
Required Sensors/Components (Sub)	Crankshaft position sensor
Frequency of Operation	Once per driving cycle: P0340, P0345 (First monitoring) Continuous: P0340, P0345 (Second monitoring) Continuous: P0341, P0346
Duration	3 seconds: P0340, P0345 (First monitoring) 6 rotations: P0340, P0345 (second monitoring) 8 rotations: P0341, P0346
MIL Operation	Immediately
Sequence of Operation	None

TYPICAL ENABLING CONDITIONS

All

Overlap prohibited DTC	None
Battery Voltage	8V or more

P0340, P0345 (First monitoring)

Starter	ON

P0340, P0345 (Second monitoring)

Elapsed time after starting the engine	0.2 seconds or more

P0341, P0346

Elapsed time after starting the engine	0.2 seconds or more

TYPICAL MALFUNCTION THRESHOLDS

P0340, P0345 (First monitoring)

Intake side camshaft position sensor	No signal

P0340, P0345 (Second monitoring)

Camshaft position sensor signal on the intake side per 0.5 crankshaft revolutions	No signal

P0341, P0346

Camshaft position sensor signal on the intake side per 2 crankshaft revolutions	The count is not 3

Circuit figure

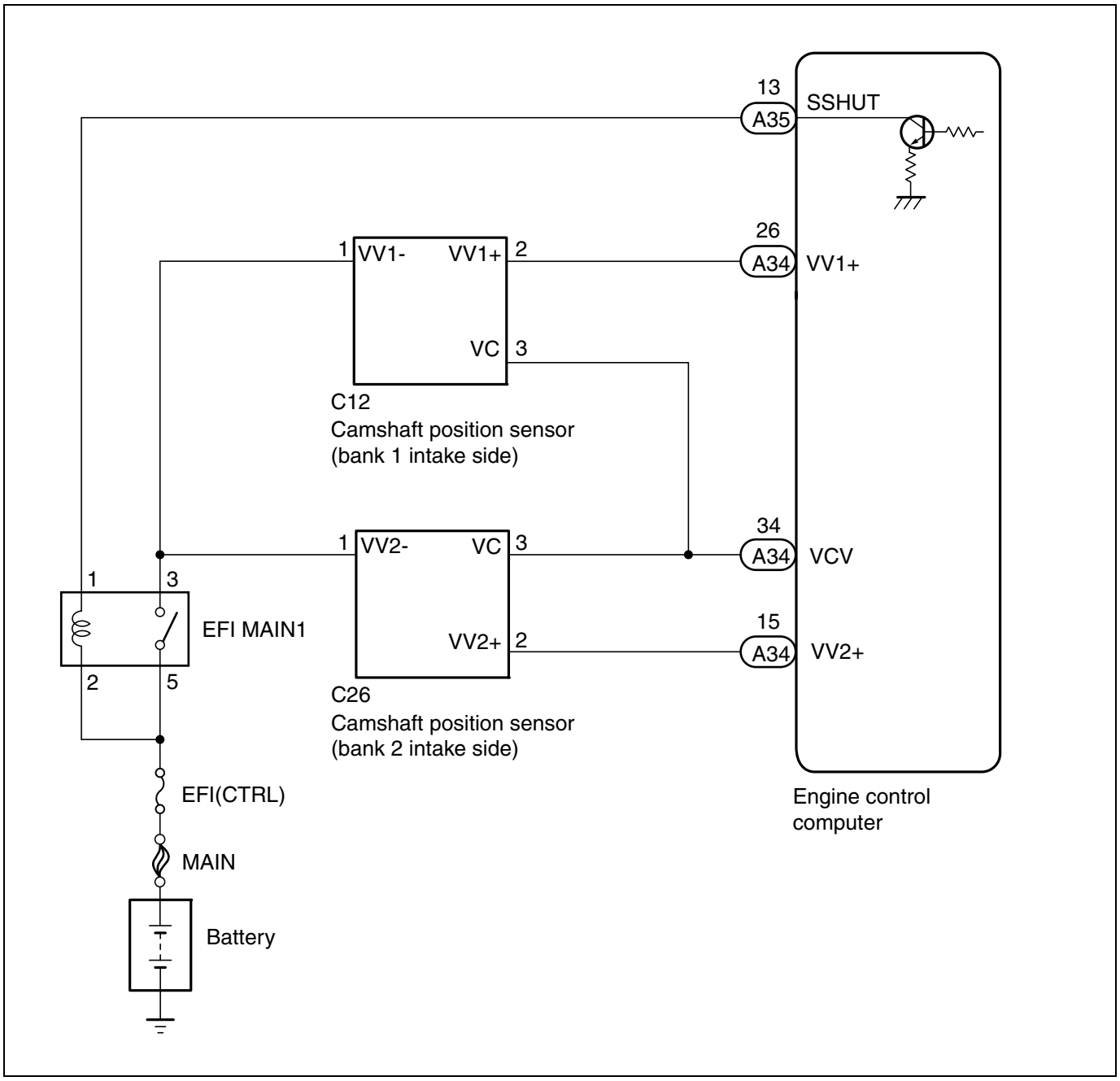

Description of functions

Test drive

Perform test drive to check if the DTC recurs.

1. Connect the SSM4 to the DLC3.
2. Turn the ignition switch to ON.
3. Turn on the SSM4.
4. Follow the SSM4 on-screen instructions to clear the DTCs. (Refer to ES - 28)
5. Turn the ignition switch to OFF, and wait for 30 seconds.
6. Turn the ignition switch to ON.
7. Turn on the SSM4.
8. Start the engine.
   NOTE:
   If the engine cannot be started, crank the engine for 10 seconds or more.
9. Idle the engine for 20 seconds or more.

10. Follow the SSM4 on-screen instructions to check the DTCs. (Refer to ES - 28)

Inspection steps

NOTE:

- Read the freeze frame data using the SSM4. A part of the engine running conditions under which the engine trouble occurred is recorded in the freeze frame data, which is useful for troubleshooting.
- Troubleshoot DTCs P0340, P0341, P0345, and P0346 first. If no fault is found, mechanical systems may be faulty.
- Bank 1 shows the side where No. 1 cylinder is located.
- Bank 2 shows the side where No. 2 cylinder is located.

ES

1	Check wiring harness and connector (camshaft position sensor power supply voltage)

NOTE:

For the inspection procedure and precautions for wiring harnesses and connectors, refer to IN - 36.

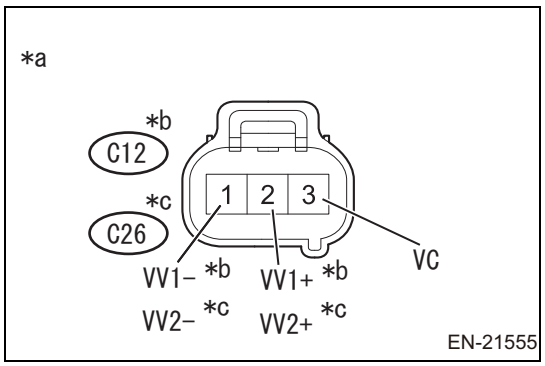

(1) Disconnect the connector of the camshaft position sensor (intake side bank 1 or bank 2).

(2) Measure the voltage between the terminals.

Voltage

Inspection terminals	Inspection conditions	Standard value
C12-1 (VV1-) - chassis ground	IG ON	11 to 14 V
C26-1 (VV2-) - chassis ground	IG ON	11 to 14 V

Captions in illustration

*a	Front side of vehicle wiring harness connector (camshaft position sensor (intake side) connector)
*b	Bank 1
*c	Bank 2

NG → Go to Step 9.

OK

2	Check wiring harness and connector (engine control computer - camshaft position sensor (intake side))

NOTE:

For the inspection procedure and precautions for wiring harnesses and connectors, refer to IN - 36.

(1) Disconnect the connector for the engine control computer.

(2) Disconnect the connector of the camshaft position sensor (intake side bank 1 or bank 2).

(3) Measure the resistance between the terminals. (For terminal arrangement, refer to ES - 36.)

Resistance (open circuit check)

Inspection terminals	Inspection conditions	Standard value
A34-26 (VV1+) - C12-2 (VV1+)	Always	Less than 1 Ω
A34-15 (VV2+) - C26-2 (VV2+)	Always	Less than 1 Ω
A34-34 (VCV) - C12-3 (VC)	Always	Less than 1 Ω
A34-34(VCV) - C26-3(VC)	Always	Less than 1 Ω

Resistance (open circuit check)

Inspection terminals	Inspection conditions	Standard value
A34-26 (VV1+) and C12-2 (VV1+) - other terminals and chassis ground	Always	10 k Ωor more
A34-15 (VV2+) and C26-2 (VV2+) - other terminals and chassis ground	Always	10 k Ωor more
A34-34 (VCV) and C12-3 (VC) - other terminals and chassis ground	Always	10 k Ωor more
A34-34 (VCV) and C26-3 (VC) - other terminals and chassis ground	Always	10 k Ωor more

NG → Repair or replacement of wiring harness or connector

OK

3	Sensor installation area check (camshaft position sensor (intake side))

(1) Check the tightening condition of the camshaft position sensor (intake side bank 1 or bank 2) bolts and the installation condition of the sensor.
Criteria: Properly installed.

NG → Repair or replace sensor installation area (camshaft position sensor (intake side))

OK

4	Unit inspection of intake cam sprocket RH

(1) Check the sensor plate installation area and the condition of the protrusion and gap sections of the intake cam sprocket (bank 1 or bank 2).
Criteria: The protrusion and gap sections of the sensor plate are normal and the plate is properly installed.

NG → Replacement of intake cam sprocket RH (Refer to EM - 16)

OK

5	Valve timing inspection (check for slack and skipping teeth of timing chain)

(1) Check valve timing. (Refer to EM - 13)

NG → Valve timing adjustment (Refer to EM - 13)

OK

6	Replacement of camshaft position sensor (intake side)

(1) Replace camshaft position sensor (intake side) on the bank side where trouble was detected through the DTC. (Refer to ES - 678)

DTC	Installed location
P0340, P0341	Bank 1
P0345, P0346	Bank 2

Next

7	Clear DTC

(1) Connect the SSM4 to the DLC3.
(2) Turn the ignition switch to ON.
(3) Turn on the SSM4.
(4) Follow the SSM4 on-screen instructions to clear the DTCs. (Refer to ES - 28)
(5) Turn the ignition switch to OFF, and wait for 30 seconds.

ES

Next

8	Perform test drive for operation check

(1) Perform test drive. (Refer to "Test drive" under "Description of functions")
(2) Follow the SSM4 on-screen instructions to check the DTC. (Refer to ES - 28)

Result

Result	Go to
No DTC is output	A
Either P0340, P0341, P0345, or P0346 is output.	B

B → Replacement of the engine control computer (Refer to ES - 670)

A

Complete

9	Relay unit inspection (EFI MAIN1 relay)

(1) Perform unit inspection of EFI MAIN1 relay. (Refer to ES - 713)

NG → Relay replacement (EFI MAIN1 relay)

OK

10	Check wiring harness and connector (EFI MAIN1 relay - camshaft position sensor)

NOTE:
For the inspection procedure and precautions for wiring harnesses and connectors, refer to IN - 36.
(1) Disconnect the connector of the camshaft position sensor (intake side bank 1 or bank 2).
(2) Remove the EFI MAIN1 relay from the engine compartment relay block.
(3) Measure the resistance between the terminals.

Resistance (open circuit check)

Inspection terminals	Inspection conditions	Standard value
3 (EFI MAIN1 relay holder) - C12-1	Always	Less than 1 Ω
3 (EFI MAIN1 relay holder) - C26-1	Always	Less than 1 Ω

Resistance (short circuit check)

Inspection terminals	Inspection conditions	Standard value
3 (EFI MAIN1 relay holder) and C12-1 - other terminals and chassis ground	Always	10 k Ωor more
3 (EFI MAIN1 relay holder) and C26-1 - other terminals and chassis ground	Always	10 k Ωor more

ES

CAUTION:
When using tester probes to take measurements at a holder, do not push them hard against the holder. Otherwise the holder could be damaged.

NG → Repair or replacement of wiring harness or connector

OK

Inspection of the ECM power supply system (Refer to ES - 642)

DTC	P0351	Ignition Coil "A" Primary/Secondary Circuit

DTC	P0352	Ignition Coil "B" Primary/Secondary Circuit

DTC	P0353	Ignition Coil "C" Primary/Secondary Circuit

DTC	P0354	Ignition Coil "D" Primary/Secondary Circuit

Circuit description

Direct ignition system (S-TDI) is used in this vehicle. In addition to ever precise ignition, S-TDI controls a loss under high voltage condition to improve overall reliability of the ignition system. The S-TDI uses one ignition coil per cylinder for ignition. The engine control computer determines ignition timing and outputs ignition signal (IGT) to individual cylinders. In response to the IGT signal, the ignition drive IC inside the igniter cuts an electric current to the primary coils in the ignition coil. This generates the counter-electromotive force in the secondary coils and ignites the spark plugs.

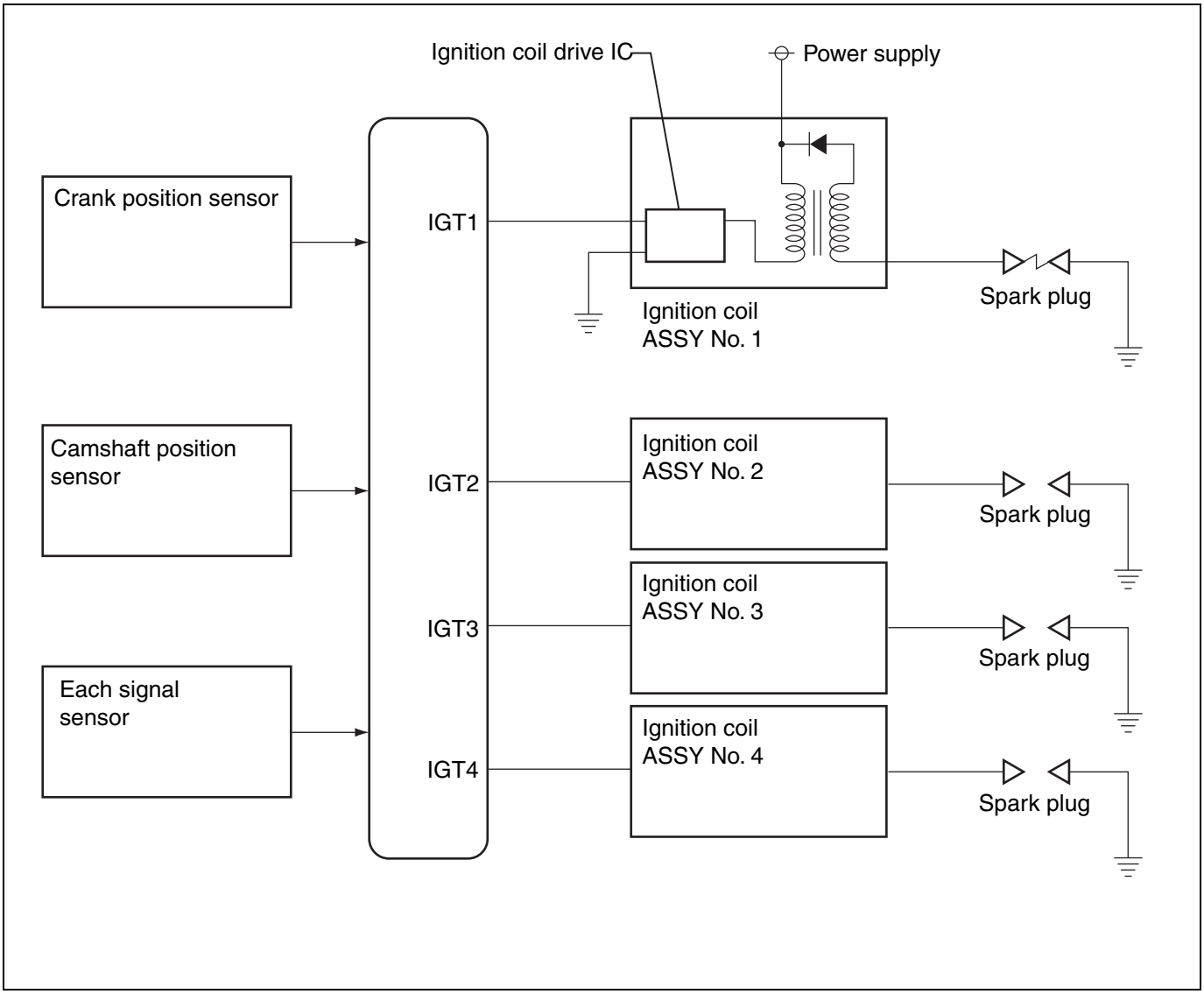

DTC No.	DTC detection conditions	Suspected parts
P0351	The ECM driver IC detects the open or short circuit between No.1 ignition coil and ECM (open circuit detection/GND short/+B short). (1 trips detection logic)	• Ignition system • Open/short condition in the IGN circuit (1 to 4) between the ignition coil and ECM. • Ignition coil (Cylinders No.1 to 4) • ECM
P0352	The ECM driver IC detects the open or short circuit between No.2 ignition coil and ECM (open circuit detection/GND short/+B short). (1 trips detection logic)	
P0353	The ECM driver IC detects the open or short circuit between No.3 ignition coil and ECM (open circuit detection/GND short/+B short). (1 trips detection logic)	
P0354	The ECM driver IC detects the open or short circuit between No.4 ignition coil and ECM (open circuit detection/GND short/+B short). (1 trips detection logic)	

MONITOR DESCRIPTION

When the ECM detects the faulty signal with the driver IC of the ECM, the ECM determines that the short or open circuit is present in the circuit between the ignition coil and the ECM.

Monitor strategy

Related DTCs	P0351: Ignition Coil "A" Primary / Secondary Circuit P0352: Ignition Coil "B" Primary / Secondary Circuit P0353: Ignition Coil "C" Primary / Secondary Circuit P0354: Ignition Coil "D" Primary / Secondary Circuit
Required Sensors/Components (Main)	ECM
Required Sensors/Components (Related)	Ignition coil
Frequency of Operation	Continuous
Duration	2.56 seconds (256 msec. ×10 counts)
MIL Operation	Immediately after
Sequence of Operation	None

TYPICAL ENABLING CONDITIONS

Overlap prohibited DTC	None
Battery Voltage	10.9V or more
Elapsed time after starting the engine	More than 1 second
Engine Speed	500 RPM or more

TYPICAL MALFUNCTION THRESHOLD

Detection of abnormal signal for ECM driver IC	ON

Circuit figure

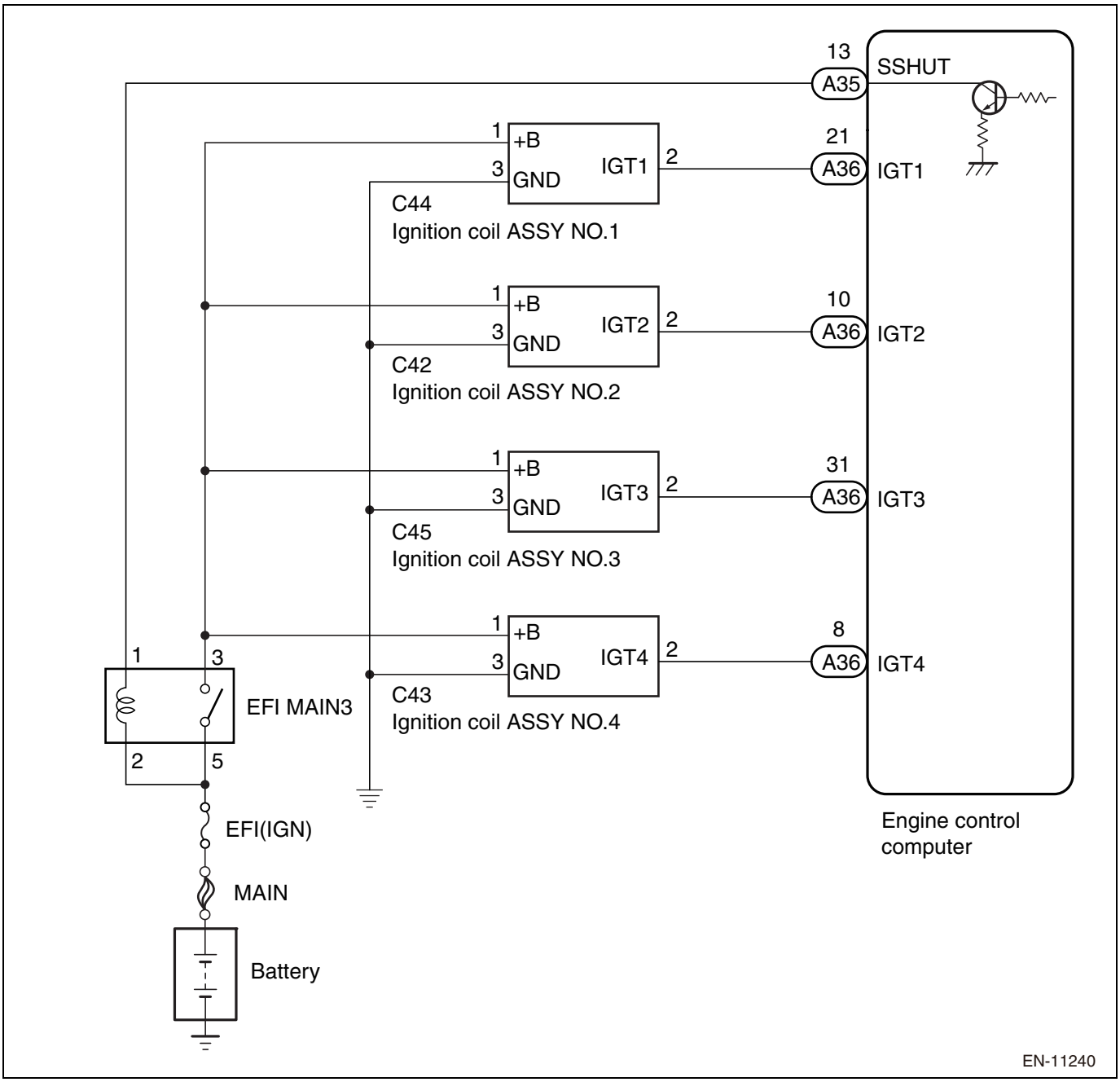

Description of functions

Test drive

Perform test drive to check if the DTC recurs.

1. Connect the SSM4 to the DLC3.
2. Turn the ignition switch to ON.
3. Turn on the SSM4.
4. Follow the SSM4 on-screen instructions to clear the DTCs. (Refer to ES - 28)
5. Turn the ignition switch to OFF, and wait for 30 seconds.
6. Turn the ignition switch to ON.
7. Turn on the SSM4.
8. Start the engine.
   NOTE:
   If the engine cannot be started, crank the engine for 10 seconds or more.
9. Idle the engine for 20 seconds or more.

10. Follow the SSM4 on-screen instructions to check the DTC. (Refer to ES - 28)

Inspection steps

CAUTION:

Before performing troubleshooting, check the fuse for this circuit.

NOTE:

- If DTC P0351 is displayed, check the ignition coil ASSY No. 1 circuit.
- If DTC P0352 is displayed, check the ignition coil ASSY No. 2 circuit.
- If DTC P0353 is displayed, check the ignition coil ASSY No. 3 circuit.
- If DTC P0354 is displayed, check the ignition coil ASSY No. 4 circuit.
- Read the freeze frame data using the SSM4. A part of the engine running conditions under which the engine trouble occurred is recorded in the freeze frame data, which is useful for troubleshooting.

1	Clear DTC

(1) Connect the SSM4 to the DLC3.
(2) Turn the ignition switch to ON.
(3) Turn on the SSM4.
(4) Follow the SSM4 on-screen instructions to clear the DTCs. (Refer to ES - 28)
(5) Turn the ignition switch to OFF, and wait for 30 seconds.

Next

2	Perform test drive for operation check

(1) Change the position of the ignition coil ASSY and test drive the vehicle. (Refer to "Test drive" under "Description of functions")
CAUTION:
Do not change the position of the ignition coil connectors.
(2) With IG ON, follow the SSM4 on-screen instructions to check the DTC. (Refer to ES - 28)

Result

Result	Go to
DTC does not change.	A
DTCs with different igniter system are output.	B

B → Replacement of ignition coil ASSY (Refer to ES - 687)

A

3	Check wiring harness and connector (ignition coil ASSY power supply circuit)

NOTE:
For the inspection procedure and precautions for wiring harnesses and connectors, refer to IN - 36.

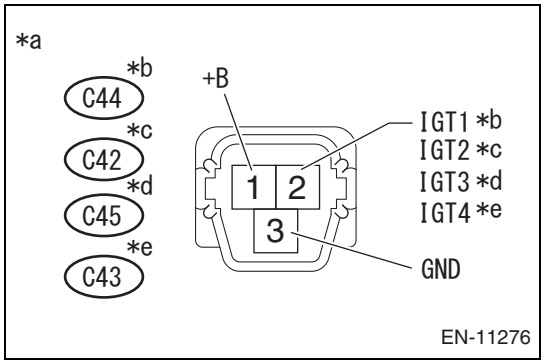

(1) Disconnect the connector of the ignition coil ASSY.
(2) Measure the voltage between the terminals.

Voltage

Inspection terminals	Inspection conditions	Standard value
C44-1 (+B) - chassis ground	IG ON	11 to 14 V
C42-1 (+B) - chassis ground	IG ON	11 to 14 V
C45-1 (+B) - chassis ground	IG ON	11 to 14 V
C43-1 (+B) - chassis ground	IG ON	11 to 14 V

Captions in illustration

*a	Front side of vehicle wiring harness connector (ignition coil ASSY connector)
*b	No. 1 cylinder
*c	No. 2 cylinder
*d	No. 3 cylinder
*e	No. 4 cylinder

NG → Repair or replacement of wiring harness or connector

OK

4	Check wiring harness and connector (ignition coil ASSY - chassis ground)

NOTE:
For the inspection procedure and precautions for wiring harnesses and connectors, refer to IN - 36.
(1) Disconnect the connector of the ignition coil ASSY.
(2) Measure the resistance between the terminals.

Resistance (open circuit check)

Inspection terminals	Inspection conditions	Standard value
C44-2 (GND) - chassis ground	Always	Less than 1 Ω
C42-2 (GND) - chassis ground	Always	Less than 1 Ω
C45-2 (GND) - chassis ground	Always	Less than 1 Ω
C43-2 (GND) - chassis ground	Always	Less than 1 Ω

NG → Repair or replacement of wiring harness or connector

OK

5	Check wiring harness and connector (engine control computer - ignition coil ASSY)

NOTE:
For the inspection procedure and precautions for wiring harnesses and connectors, refer to IN - 36.
(1) Disconnect the connector for the engine control computer.
(2) Disconnect the connector of the ignition coil ASSY.
(3) Measure the resistance between the terminals. (For terminal arrangement, refer to ES - 36.)

Resistance (open circuit check)

Inspection terminals	Inspection conditions	Standard value
A36-21 (IGT1) - C44-3	Always	Less than 1 Ω
A36-10 (IGT2) - C42-3	Always	Less than 1 Ω
A36-31 (IGT3) - C45-3	Always	Less than 1 Ω
A36-8 (IGT4) - C43-3	Always	Less than 1 Ω

Resistance (short circuit check)

Inspection terminals	Inspection conditions	Standard value
A36-21 (IGT1) and C44-3 (IGT1) - other terminals and chassis ground	Always	10 k Ωor more
A36-10 (IGT2) and C42-3 (IGT2) - other terminals and chassis ground	Always	10 k Ωor more
A36-31 (IGT3) and C45-3 (IGT3) - other terminals and chassis ground	Always	10 k Ωor more
A36-8 (IGT4) and C43-3 (IGT4) - other terminals and chassis ground	Always	10 k Ωor more

ES

NG → Repair or replacement of wiring harness or connector

OK

Replacement of the engine control computer (Refer to ES - 670)

DTC	P0365	Camshaft Position Sensor "B" Circuit (Bank 1)

DTC	P0366	Camshaft Position Sensor "B" Circuit Range/Performance (Bank 1)

DTC	P0390	Camshaft Position Sensor "B" Circuit (Bank 2)

DTC	P0391	Camshaft Position Sensor "B" Circuit Range/Performance (Bank 2)

Circuit description

Exhaust VVT system consists of timing rotor integrated into each exhaust camshaft and the magnetic resistance element (MRE) type camshaft position sensor. When the timing rotor (camshaft) consisting of two protruded sections turns, the magnetic vector (direction of the magnetic field) applied to the MRE (magnetic resistance element) inside the camshaft position sensor changes. This causes a change in the internal resistance of the MRE (magnetic resistance element). This change in resistance is converted to voltage and rectified to square waveform where Hi is approx. 4.8 V and Lo is approx. 0.8 V. The actual camshaft position is detected through this and output to the engine control computer.

DTC No.	DTC detection conditions	Suspected parts
P0365	No exhaust side camshaft position sensor signal input during 1.5 crankshaft rotations (bank 1) (1 trips detection logic)	• Open/short condition in exhaust side camshaft position sensor (bank 1) circuit • Exhaust side camshaft position sensor (bank 1) • Exhaust cam sprocket (Bank 1) • Teeth skipping of timing chain for exhaust camshaft • ECM
P0366	The count of exhaust side camshaft position sensor signal per 2 crankshaft rotations is not 2 (bank 1). (1 trips detection logic)	

DTC No.	DTC detection conditions	Suspected parts
P0390	No exhaust side camshaft position sensor signal input during 1.5 crankshaft rotations (bank 2) (1 trips detection logic)	• Open/short condition in exhaust side camshaft position sensor (bank 2) circuit • Exhaust side camshaft position sensor (bank 2) • Exhaust cam sprocket (Bank 2) • Teeth skipping of timing chain for exhaust camshaft • ECM
P0391	The count of exhaust side camshaft position sensor signal per 2 crankshaft rotations is not 2 (bank 2). (1 trips detection logic)	

ES

MONITOR DESCRIPTION

Regardless of engine running, when no signal is transmitted from the camshaft position sensor, or the rotation of the camshaft and that of the crankshaft are not synchronized with each other, the ECM records the DTC.

Monitor strategy

Related DTCs	P0365: Camshaft Position Sensor "B" Circuit (Bank 1) P0366: Camshaft Position Sensor "B" Circuit Range / Performance(Bank 1) P0390: Camshaft Position Sensor "B" Circuit (Bank 2) P0391: Camshaft Position Sensor "B" Circuit Range / Performance(Bank 2)
Required Sensors/Components (Main)	Exhaust side camshaft position sensor (banks 1 and 2)
Required Sensors/Components (Related)	Crankshaft position sensor
Frequency of Operation	Continuous
Duration	6 rotations: P0365, P0390 8 rotations: P0366, P0391
MIL Operation	Immediately after
Sequence of Operation	None

TYPICAL ENABLING CONDITIONS

Overlap prohibited DTC	None
Battery Voltage	10.9V or more
Elapsed time after starting the engine	0.2 seconds or more

TYPICAL MALFUNCTION THRESHOLDS

P0365, P0390

Camshaft position sensor signal on the exhaust side per 0.5 crankshaft revolutions	No signal

P0366, P0391

VVT signal on the exhaust side per 2 crankshaft revolutions	The count is not 2

Circuit figure

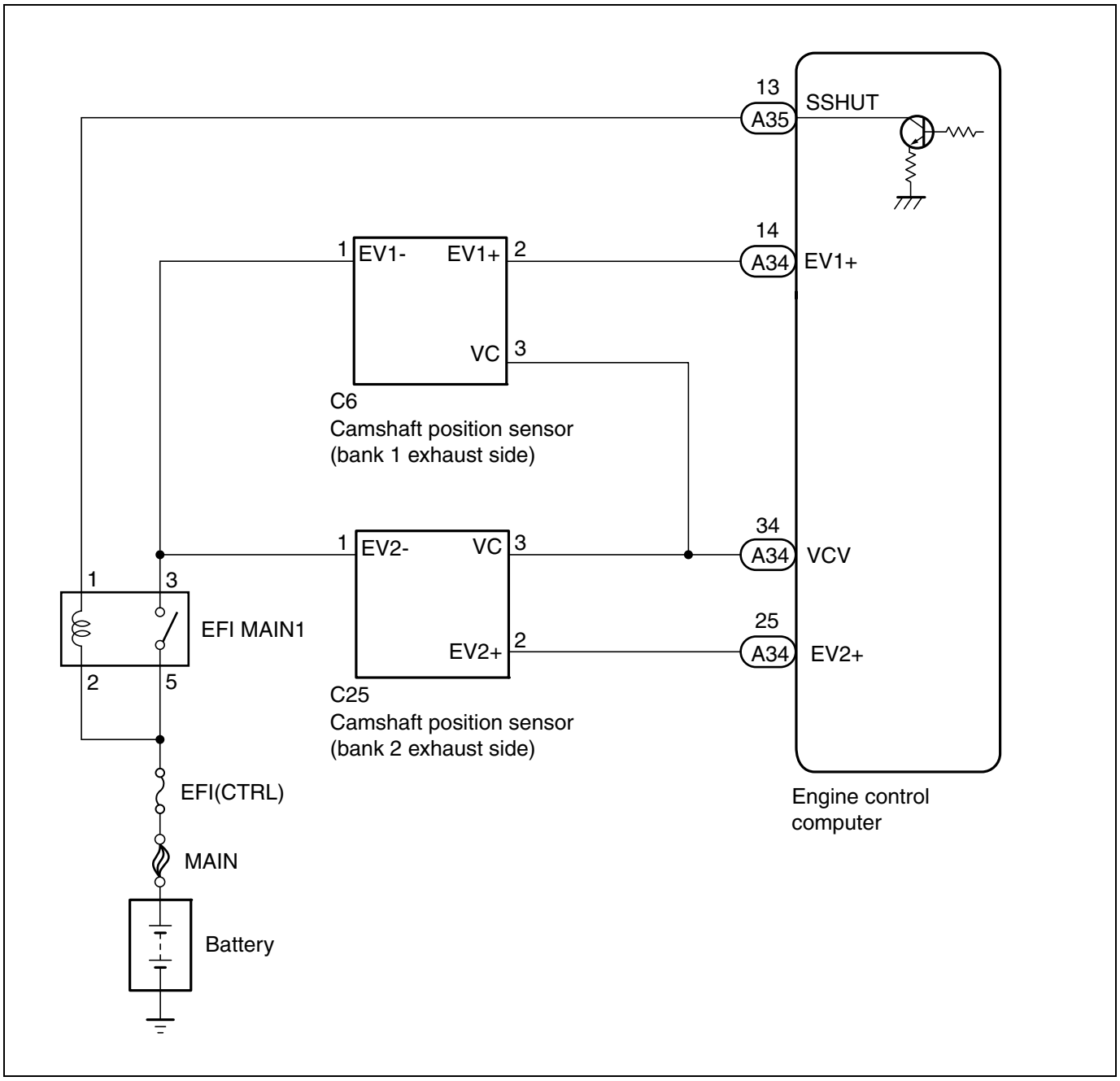

Description of functions

Test drive

Perform test drive to check if the DTC recurs.

1. Connect the SSM4 to the DLC3.
2. Turn the ignition switch to ON.
3. Turn on the SSM4.
4. Follow the SSM4 on-screen instructions to clear the DTCs. (Refer to ES - 28)
5. Turn the ignition switch to OFF, and wait for 30 seconds.
6. Turn the ignition switch to ON.
7. Turn on the SSM4.
8. Start the engine.
   NOTE:
   If the engine cannot be started, crank the engine for 10 seconds or more.
9. Idle the engine for 20 seconds or more.

10. Follow the SSM4 on-screen instructions to check the DTC. (Refer to ES - 28)

Inspection steps

NOTE:

- Read the freeze frame data using the SSM4. A part of the engine running conditions under which the engine trouble occurred is recorded in the freeze frame data, which is useful for troubleshooting.
- Troubleshoot DTCs P0365, P0366, P0390, and P0391 first. If no fault is found, mechanical systems may be faulty.
- Bank 1 shows the side where No. 1 cylinder locates.
- Bank 2 shows the side where No. 2 cylinder locates.

ES

1	Check wiring harness and connector (camshaft position sensor power supply voltage)

NOTE:

For the inspection procedure and precautions for wiring harnesses and connectors, refer to IN - 36.

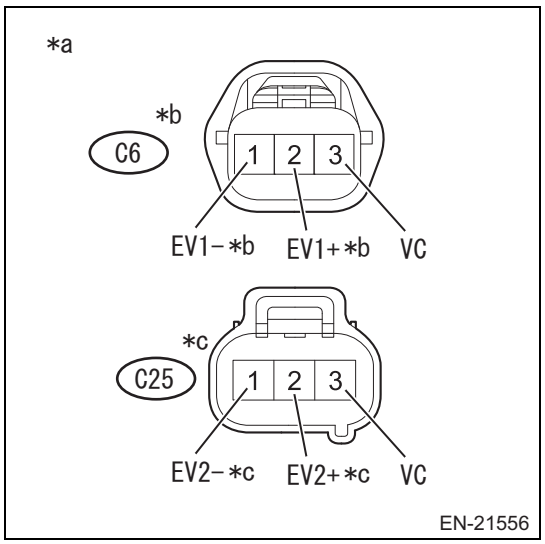

(1) Disconnect the connector of the camshaft position sensor (exhaust side bank 1 or bank 2).

(2) Measure the voltage between the terminals.

Voltage

Inspection terminals	Inspection conditions	Standard value
C6-1 (EV1-) - chassis ground	IG ON	11 to 14 V
C25-1 (EV2-) - chassis ground	IG ON	11 to 14 V

Captions in illustration

*a	Front side of vehicle wiring harness connector (camshaft position sensor (exhaust side) connector)
*b	Bank 1
*c	Bank 2

NG → Go to Step 9.

OK

2	Check wiring harness and connector (engine control computer - camshaft position sensor (exhaust side))

NOTE:

For the inspection procedure and precautions for wiring harnesses and connectors, refer to IN - 36.

(1) Disconnect the connector for the engine control computer.

(2) Disconnect the connector of the camshaft position sensor (exhaust side bank 1 or bank 2).

(3) Measure the resistance between the terminals. (For terminal arrangement, refer to ES - 36.)

Resistance (open circuit check)

Inspection terminals	Inspection conditions	Standard value
A34-14 (EV1+) - C6-2 (EV1+)	Always	Less than 1 Ω
A34-25 (EV2+) - C25-2 (EV2+)	Always	Less than 1 Ω
A34-34(VCV) - C6-3(VC)	Always	Less than 1 Ω
A34-34(VCV) - C25-3(VC)	Always	Less than 1 Ω

Resistance (short circuit check)

Inspection terminals	Inspection conditions	Standard value
A34-14 (EV1+) and C6-2 (EV1+) - other terminals and chassis ground	Always	10 k Ωor more
A34-25 (EV2+) and C25-2 (EV2+) - other terminals and chassis ground	Always	10 k Ωor more
A34-34 (VCV) and C6-3 (VC) - other terminals and chassis ground	Always	10 k Ωor more
A34-34 (VCV) and C25-3 (VC) - other terminals and chassis ground	Always	10 k Ωor more

NG → Repair or replacement of wiring harness or connector

OK

3	Sensor installation area check (camshaft position sensor (exhaust side))

(1) Check the tightening condition of the camshaft position sensor (exhaust side bank 1 or bank 2) bolts and the installation condition of the sensor.
Criteria: Properly installed.

NG → Repair or replace sensor installation area (camshaft position sensor (exhaust side))

OK

4	Exhaust cam sprocket unit inspection

(1) Check the sensor plate installation area and the condition of the protrusion and gap sections of the exhaust cam sprocket (bank 1 or bank 2).
Criteria: The protrusion and gap sections of the sensor plate are normal and the plate is properly installed.

NG → Replacement of exhaust cam sprocket (Refer to EM - 31)

OK

5	Valve timing inspection (check for slack and skipping teeth of timing chain)

(1) Check valve timing. (Refer to EM - 13)

NG → Valve timing adjustment (Refer to EM - 16)

OK

6	Replacement of camshaft position sensor (exhaust side)

(1) Replace camshaft position sensor (exhaust side) on the bank side where trouble was detected through the DTC. (Refer to ES - 678)

DTC	Installed location
P0365, P0366	Bank 1
P0390, P0391	Bank 2

Next

7	Clear DTC

(1) Connect the SSM4 to the DLC3.
(2) Turn the ignition switch to ON.
(3) Turn on the SSM4.
(4) Follow the SSM4 on-screen instructions to clear the DTCs. (Refer to ES - 28)
(5) Turn the ignition switch to OFF, and wait for 30 seconds.

ES

Next

8	Perform test drive for operation check

(1) Perform test drive. (Refer to "Test drive" under "Description of functions")
(2) Follow the SSM4 on-screen instructions to check the DTC. (Refer to ES - 28)

Result

Result	Go to
No DTC is output	A
Either P0365, P0366, P0390, or P0391 is output.	B

B → Replacement of the engine control computer (Refer to ES - 670)

A

Complete

9	Relay unit inspection (EFI MAIN1 relay)

(1) Perform unit inspection of EFI MAIN1 relay. (Refer to ES - 713)

NG → Relay replacement (EFI MAIN1 relay)

OK

10	Wiring harness and connector check

NOTE:
For the inspection procedure and precautions for wiring harnesses and connectors, refer to IN - 36.
(1) Disconnect the connector of the camshaft position sensor (exhaust side bank 1 or bank 2).
(2) Remove the EFI MAIN1 relay from the engine compartment relay block.
(3) Measure the resistance between the terminals.

Resistance (open circuit check)

Inspection terminals	Inspection conditions	Standard value
3 (EFI MAIN1 relay holder) - C6-1	Always	Less than 1 Ω
3 (EFI MAIN1 relay holder) - C25-1	Always	Less than 1 Ω

Resistance (short circuit check)

Inspection terminals	Inspection conditions	Standard value
3 (EFI MAIN1 relay holder) and C6-1 - other terminals and chassis ground	Always	10 k Ωor more
3 (EFI MAIN1 relay holder) and C25-1 - other terminals and chassis ground	Always	10 k Ωor more

ES

CAUTION:
When using tester probes to take measurements at a holder, do not push them hard against the holder. Otherwise the holder could be damaged.

NG → Repair or replacement of wiring harness or connector

OK

Inspection of the ECM power supply system (Refer to ES - 642)

DTC	P0420	Catalyst System Efficiency Below Threshold (Bank 1)

Circuit description

The engine control computer uses two sensors installed on the front and rear of the three-way catalytic converter to monitor the clean-up condition of the catalyst. At the same time, the air/fuel ratio sensor transmits an air/fuel ratio signal at the front of the catalyst to the engine control computer. At the same time, the oxygen sensor transmits an oxygen level signal after catalyst to the engine control computer. The engine control computer uses output voltage of the air/fuel ratio sensor and the oxygen sensor to calculate oxygen storage capacity (hereafter called OSC) and detects deteriorated condition of the catalyst.

DTC No.	DTC detection conditions	Suspected parts
P0420	Diagnostic value exceeds the standard value. (2 trips detection logic)	• Gas leakage from exhaust system • Air / fuel ratio sensor • Oxygen sensor • Front exhaust manifold ASSY (TWC front catalyst) and front exhaust pipe ASSY (TWC: Rear catalyst)

MONITOR DESCRIPTION

The ECM uses the diagnosis value to determine catalyst deterioration. If the diagnostic value exceeds the standard value, the ECM determines that there is catalyst degradation, illuminates the MIL, and stores the DTC.

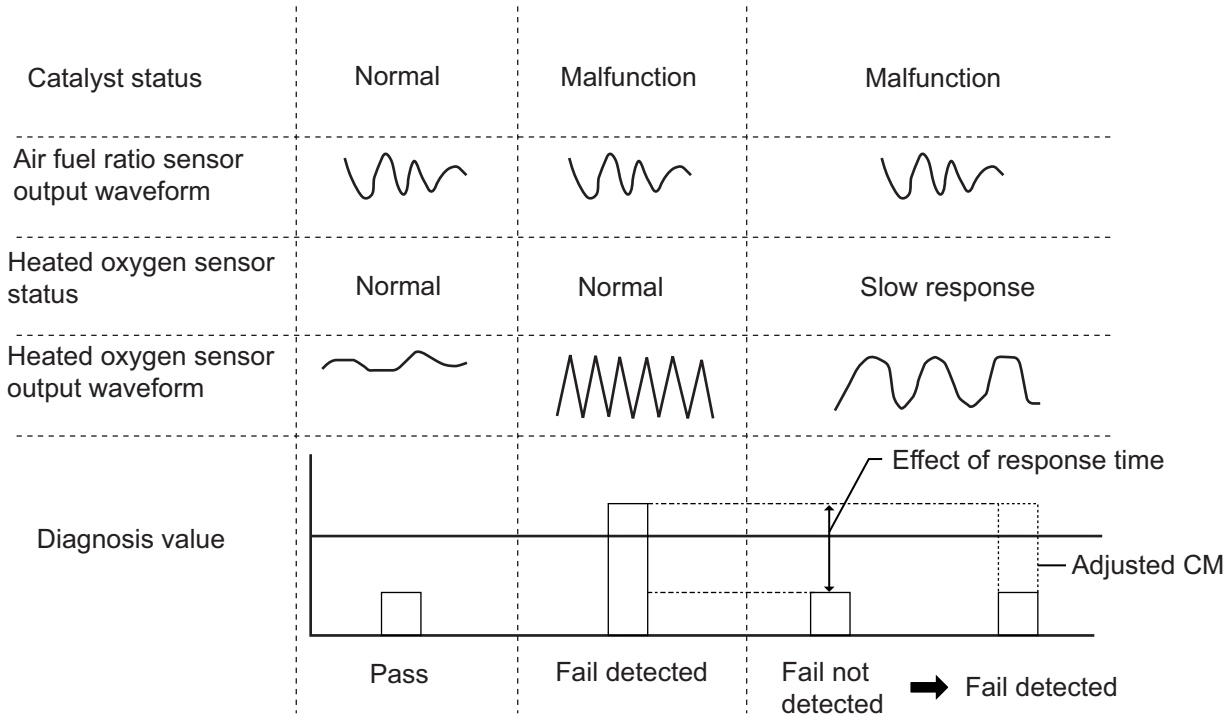

The diagnosis value is calculated based on the catalyst monitor value (CM) which is determined from the amount of change in the air/fuel ratio sensor lambda value and oxygen sensor value, as well as the reaction rate determined during oxygen sensor reaction time.

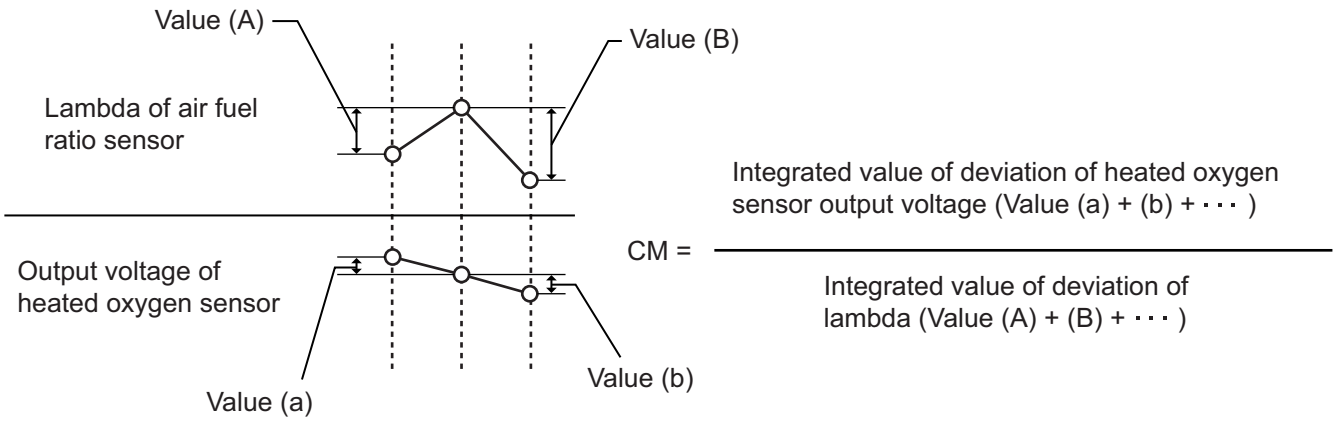

*: Diagnosis value = CM ×(1 + Reaction rate)

Monitor strategy

Related DTCs	P0420: Catalyst monitor with sufficient sensor performance for other monitors functional check
Required Sensors/Components (Main)	Air/fuel ratio and oxygen sensors

Required Sensors/Components (Related)	Intake air temperature sensor, intake air flow meter SUB-ASSY, vacuum sensor, crankshaft position sensor, and E.F.I. water temperature sensor
Frequency of Operation	Once per driving cycle
Duration	Less than 1 second
MIL Operation	2 operation cycle
Sequence of Operation	None

TYPICAL ENABLING CONDITIONS

Overlap prohibited DTC	P0030, P0031, P0032 (air/fuel ratio sensor - heater) P0037, P0038 (oxygen sensor - heater) P0068, P0107, P0108 (Vacuum (MAP) sensor) P0101, P0102, P0103 (intake air flow (MAF) meter) P0111, P0112, P0113 (Intake Air Temperature (IAT) sensor) P0117, P0118, P0125 (Engine Coolant Temperature (ECT) sensor) P0122, P0123, P0222, P0223 (Throttle position sensor) P0131, P0132 (air/fuel ratio sensor - ECM input voltage) P0134, P2195, P2196 (Air/fuel ratio sensor - Output voltage) P0137, P0138 (oxygen sensor - lack of continuity in circuit) P0500 (Vehicle Speed Sensor (VSS)) P0604, P0605 (ECM ROM) P1160 (throttle return spring) P2096, P2097 (Post-catalyst fuel trim system) P2101, P2102 (Throttle actuator control motor) P2109 (Throttle position sensor minimum stop) P2119 (Throttle actuator control) P2122, P2123, P2127, P2128 (Accelerator Pedal Position Sensor (APPS) circuit) P2135 (Throttle position sensor (TPS) degree of correlation) P2138 (Accelerator pedal position sensor (APPS) degree of correlation)
Battery Voltage	10.9V or more
F/B operation condition	Closed loop
Intake amount per second	5 g/sec or more, and less than 30 g/sec
Catalyst estimated exhaust gas temperature	440°C {824°F} or more
Vehicle speed	40 km/h {24.9 MPH} or more
Variation in oxygen sensor output, after the fuel is cut off, from rich to lean	Experienced
Secondary Oxygen sensor element estimated temperature	500°C {932°F} or more
Atmospheric pressure	75.06 kPa {563.09 mmHg, 22.169 inHg, 10.884 psi} or more

TYPICAL MALFUNCTION THRESHOLDS

Diagnosis value*	More than 10

*: Refer to "MONITOR DESCRIPTION"

MONITOR RESULT

Refer to [Monitor Status Check] (Refer to ES - 24)

Arrangement drawing of catalyst

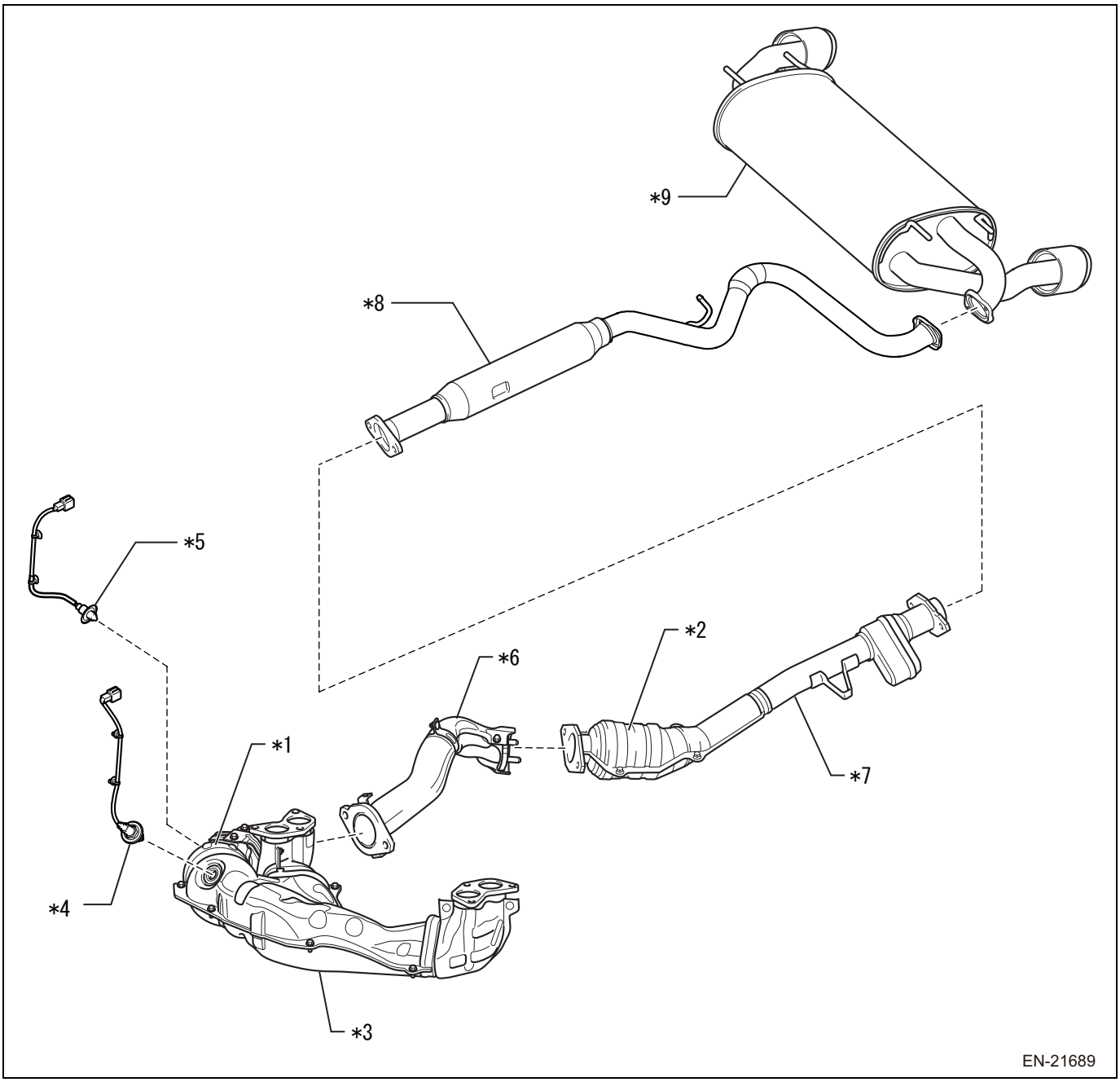

Captions in illustration

*1	Front catalyst	*2	Rear catalyst
*3	Exhaust manifold	*4	Air / fuel ratio sensor
*5	Oxygen sensor	*6	Joint pipe
*7	Exhaust pipe ASSY FR	*8	Exhaust center pipe ASSY
*9	Exhaust tail pipe ASSY	-	-

Description of functions

Test drive

Perform test drive to check if the DTC recurs.

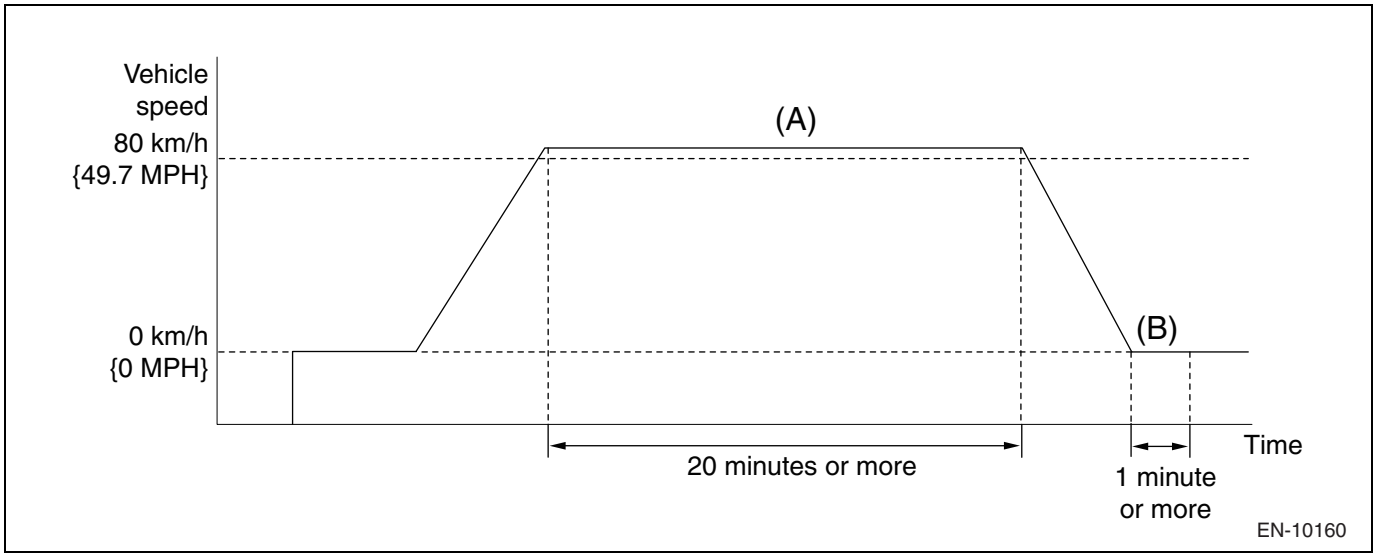

1. Connect the SSM4 to the DLC3.
2. Turn the ignition switch to ON.
3. Turn on the SSM4.
4. Follow the SSM4 on-screen instructions to clear the DTCs. (Refer to ES - 28)
5. Turn the ignition switch to OFF, and wait for 30 seconds.
6. Turn the ignition switch to ON.
7. Turn on the SSM4.
8. Start the engine and let it warm up until the engine coolant temperature stabilizes. (at 75°C {167°F} or more).
9. Perform driving test as follows.
   WARNING:
   When performing this driving test, always observe the applicable traffic laws such as the speed limit.
   (a) Drive at 80 km/h {49.7 MPH} or more for 20 minutes or more. (A)
   (b) Stop the vehicle.
   (c) Idle the engine for 1 minute or more. (B)
10. Follow the SSM4 on-screen instructions to check the DTC. (Refer to ES - 28)

Checking output condition of the catalyst deterioration detection sensor

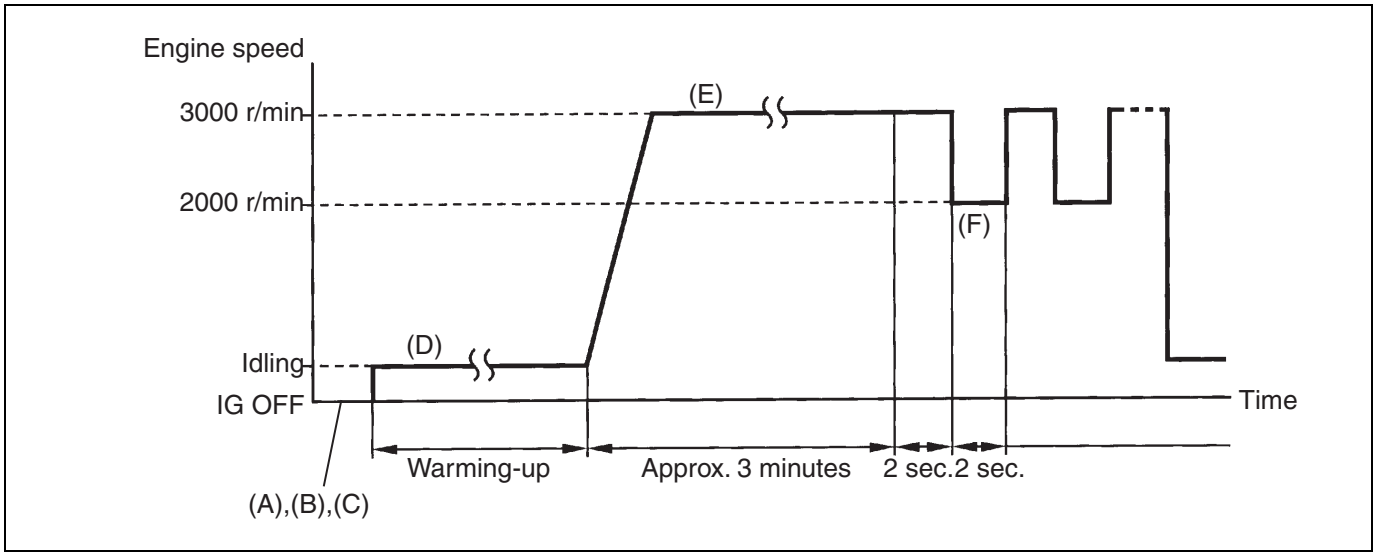

1. Connect the SSM4 to the DLC3. (A)
2. Turn the ignition switch to ON. (B)
3. Turn on the SSM4. (C)
4. Start the engine, turn off all the accessory switches, and wait until the engine warms up and the coolant temperature stabilizes. (at 75°C {167°F} or more) (D)
5. Keep the engine speed between 2500 and 3000 r/min for approximately 3 minutes. (E)
6. After that, keep the engine speed at 3000 r/min for 2 seconds, and then at 2000 r/min for 2 seconds. (F)

7. Select the following menu items using the SSM4. : [Each System] / [Engine Control System] / [Data monitor] / [A/F Sensor #11] / [Oxygen sensor #12]
8. Check the data display.

NOTE:

- If output voltage of the air/fuel ratio sensor or the oxygen sensor do not change or noise is emitted, malfunction may exist in the sensors.
- If output voltage of both sensors remain in lean or rich state, air/fuel ratio may be extremely lean or rich.
- When catalyst becomes deteriorated, output voltage of oxygen sensors changes significantly even under normal driving condition.

ES

Output wave form of air/fuel ratio sensor and oxygen sensor

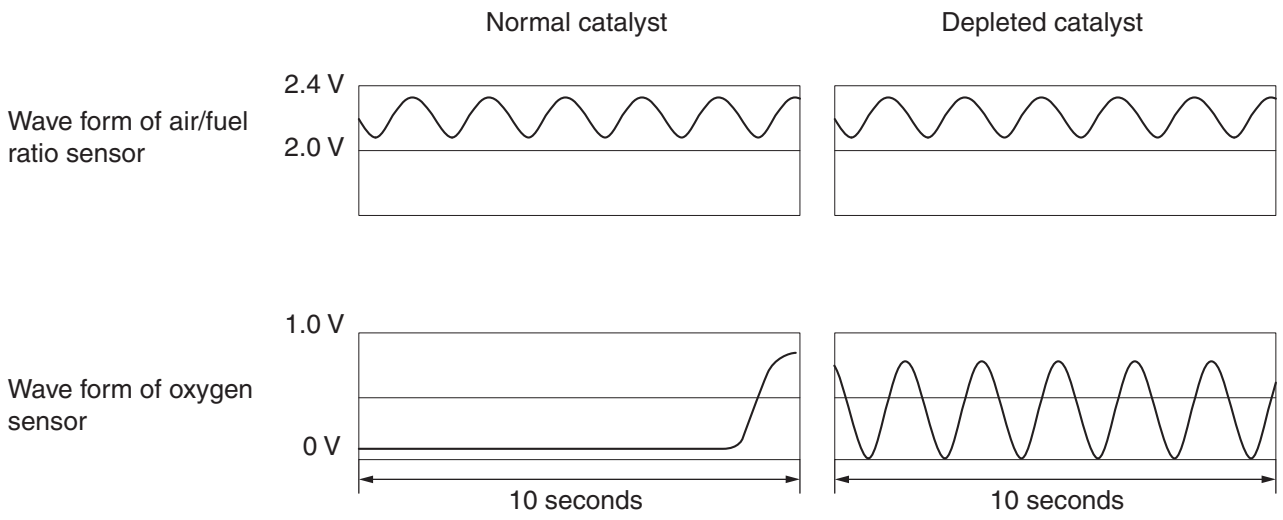

C

Inspection steps

NOTE:

- Read the freeze frame data using the SSM4. A part of the engine running conditions under which the engine trouble occurred is recorded in the freeze frame data, which is useful for troubleshooting.
- [B1S1] indicates [Bank 1 Sensor 1]. Sensor 1 is the sensor that is installed on the upstream (closest to the engine) of the catalyst.
- [B1S2] indicates [Bank 1 Sensor 2]. Sensor 2 is the sensor that is installed on the downstream (far side of the engine) of the catalyst.
- When malfunction cannot be located after troubleshooting DTC P0420, abnormally lean or rich condition may be the cause of malfunction. Perform inspection following the inspection procedures for P0171 (lean abnormal) and P0172 (rich abnormal).

1	Read DTC

(1) Connect the SSM4 to the DLC3.
(2) Turn the ignition switch to ON.
(3) Turn on the SSM4.
(4) Follow the SSM4 on-screen instructions to check the DTC. (Refer to ES - 28)

Result

Result	Go to
Only P0420 is output.	A
Diagnostic codes other than P0420 are also output.	B

NOTE:
If any DTCs other than P0420 are output, troubleshoot them first.

B → To corresponding DTC chart (refer to ES - 12)

A

2	Performing of SSM4 [Active Test] ([Cylinder Fuel Rate])

(1) Connect the SSM4 to the DLC3.
(2) Turn the ignition switch to ON.
(3) Turn on the SSM4.
(4) Start the engine, turn off all the accessory switches, and wait until the engine warms up and the coolant temperature stabilizes. (at 80°C {176°F} or more).
(5) Run the engine at 2500 r/min for approximately three minutes to warm up each sensor.
(6) Select the following menu items using the SSM4. : [Each System] / [Engine Control System] / [Work Support] / [Active Test] / [Cylinder Fuel Rate]
(7) Increase and decrease fuel injection volume, and read values of [A/F Sensor #11] and [Oxygen sensor #12].
CAUTION:
- The output voltage for the air/fuel ratio sensor is delayed a few seconds, while the output voltage for the oxygen sensor is delayed for a maximum of approximately 20 seconds.
- Because the sensors become cold, measure the voltage promptly after warming up the sensors.

NOTE:
- Change fuel injection volume from -12 % to +12 %.
- If the air/fuel ratio sensor output shows little response, the air/fuel ratio sensor may be at fault.

Voltage

Item	Fuel injection volume	Output voltage of air/fuel ratio sensor and oxygen sensor
[A/F Sensor #11]	+12 % increase	Less than 2.0 V (rich state)
	-12 % decrease	2.4 V or more (lean state)
[Oxygen sensor #12]	+12 % increase	0.55 V or more (rich state)
	-12 % decrease	Less than 0.4 V (lean state)

Result

[AFS Voltage B1S1] result	[Oxygen Sensor Output Voltage (B1-S2)] result	State of air/fuel ratio, air/fuel ratio sensor, and oxygen sensor	Misfiring	Inspection parts	Go to
Rich/Lean	Rich/Lean	Normal	-	• Exhaust manifold (front catalyst) • Exhaust pipe ASSY FR (rear catalyst) • Exhaust gas leakage	A
Lean	Rich/Lean	Malfunction in the air/fuel ratio sensor	-	• Air / fuel ratio sensor	B
Rich	Rich/Lean	Malfunction in the air/fuel ratio sensor	-	• Air / fuel ratio sensor	B
Rich/Lean	Lean	Oxygen sensor failure	-	• Oxygen sensor • Exhaust gas leakage	C

[AFS Voltage B1S1] result	[Oxygen Sensor Output Voltage (B1-S2)] result	State of air/fuel ratio, air/fuel ratio sensor, and oxygen sensor	Misfiring	Inspection parts	Go to
Rich/Lean	Rich	Oxygen sensor failure	-	• Oxygen sensor • Exhaust gas leakage	C
Lean	Lean	Lean state	Possible	• Extremely lean state • Exhaust gas leakage	D
Rich	Rich	Rich state	-	• Extremely rich state • Exhaust gas leakage	D

ES

NOTE:

- Lean status: When [Active Test] is performed, the output voltage of the air/fuel ratio is 2.4 V or more, and the output voltage of oxygen sensor remains at less than 0.4 V.
- Rich status: When [Active Test] is performed, the output voltage of the air/fuel ratio sensor remains at less than 2.0 V, and the output voltage of the oxygen sensor remains at 0.55 V or more.
- Rich/lean status: When [Active Test] is performed, the output voltage of the air/fuel ratio sensor and oxygen sensor are normal.
- For details of [A/F Sensor #11] and [Oxygen sensor #12] in the ECM [Data monitor] menus, check [Data monitor] / [Active Test]. (Refer to ES - 43)

B → Replacement of the air/fuel ratio sensor (Refer to ES - 707)

C → Go to Step 5.

D → Go to Step 6.

A

3 Exhaust gas leakage check

(1) Make sure that exhaust gas is not leaking from connections of exhaust pipes and installation areas of sensors.
Criteria: There is no exhaust leakage.

NG → Repair of exhaust gas leakage

OK

4 Replacement of exhaust manifold (front catalyst)

(1) Replace the exhaust manifold (front catalyst). (Refer to IE - 15)

Next

Replacement of exhaust pipe ASSY FR (rear catalyst) (Refer to IE - 39)

5 Exhaust gas leakage check

(1) Make sure that exhaust gas is not leaking from connections of exhaust pipes and installation areas of sensors.
Criteria: There is no exhaust leakage.

NG → Repair of exhaust gas leakage

OK

Replacement of oxygen sensor (Refer to ES - 710)

6	Exhaust gas leakage check

(1) Make sure that exhaust gas is not leaking from connections of exhaust pipes and installation areas of sensors.
Criteria: There is no exhaust leakage.

NG → Repair of exhaust gas leakage

OK

Remove the cause of extremely abnormal lean or rich state (Refer to ES - 233)

DTC	P0441	Purge flow

Circuit description
For a circuit description, refer to ES - 595.

DTC No.	DTC detection conditions	Suspected parts
P0441	If any of the following conditions continuously apply when the engine is running: • The purge/non-purge pressure difference is less than 0.075 kPa {0.563 mmHg, 0.0222 inHg, 0.0109 psi}. • When purging is carried out when the vent valve is forced ON (Closed), the purge/non-purge pressure difference is less than 0.075 kPa {0.563 mmHg, 0.0222 inHg, 0.0109 psi}.	• Purge VSV • Purge line • Connector/Wiring harness (Purge VSV - ECM) • ECM • Leakage from the EVAP system

MONITOR DESCRIPTION
This monitor Intrusively performs a functional check to detect incorrect purge flow. the monitor seals the EVAP system (i.e. isolated from the atmosphere) by closing the ELCM switching valve intrusively after recovering from a fuel cut event. In the case of normal conditions and the commanded purge control duty ratio is more than 0%, the ELCM pressure (gauge) will decrease due to engine vacuum and reach to the threshold value.
However, in the case of malfunction conditions (e.g. fuel cap open and purge valve stuck closed, or purge line disconnected or blocked), the monitor determines a malfunction and stores a fault code if the ELCM pressure (gauge) does not reach the threshold within a predetermined time.

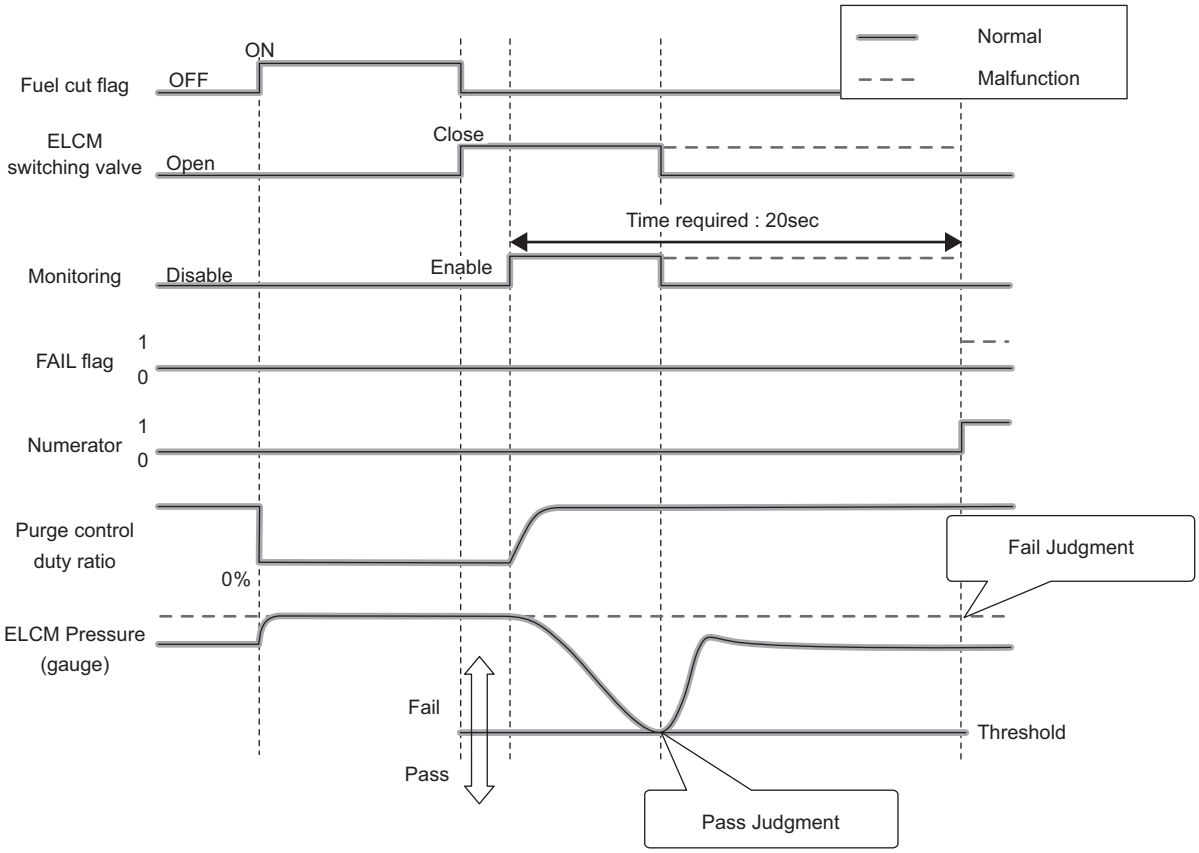

Monitor strategy

Related DTCs	P0441: Incorrect purge flow in ELCM functional check
Required Sensors/Components	Purge VSV Canister pump module
Frequency of Operation	Once per driving cycle
Duration	Less than 1 second
MIL Operation	2 operation cycle
Sequence of Operation	None

TYPICAL ENABLING CONDITIONS

Overlap prohibited DTC	None
Battery Voltage	10.9V or more
Atmospheric pressure	75.06 kPa (abs) {563.09 mmHg (abs), 22.169 inHg (abs), 10.884 psi (abs)} or more
Accumulative purge gas volume after the engine is started	10 g or more*

(Purge control duty ratio ≠0 % after the time when purge control duty ratio = 0 %)	1.5 seconds or more
Time during which the switching valve of the evaporative system leak check module is closed	Less than 20 seconds
Ambient temperature	More than -25°C

*It takes approximately 2 min at 40 mph.

TYPICAL MALFUNCTION THRESHOLDS

Pressure in the evaporative system leak check module (gauge pressure)	More than -400 Pa (gauge) {-3 mmHg (gauge), -0.12 inHg (gauge), -0.06 psi (gauge)}
Accumulative value (purge gas - evaporative gas)	3 g or more

ES

Monitoring result

Refer to [Monitor Status Check] (Refer to ES - 24)

Description of functions

Test drive

1. Connect the SSM4 to the DLC3.
2. Turn the ignition switch to ON.
3. Turn on the SSM4.
4. Follow the SSM4 on-screen instructions to clear the DTCs. (Refer to ES - 28)
5. Drive according to the following driving patterns.

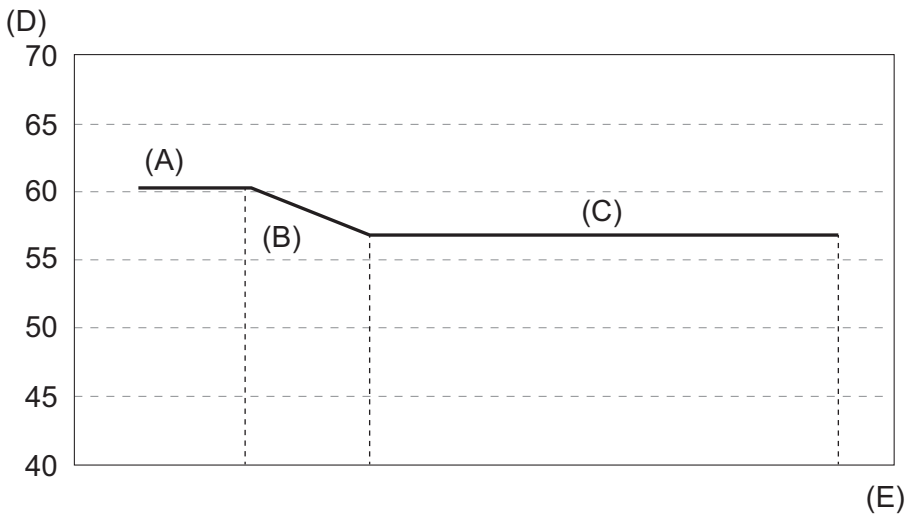

EN-20222

Captions in illustration

(A)	When the vehicle is fully warmed up, drive at 60 km/h (37 MPH) or more for 5 minutes or more.	(D)	Vehicle speed km/h (MPH)
(B)	Decelerate for 3 seconds or more with the throttle fully open.	(E)	Seconds
(C)	Depress the accelerator so that a uniform speed is maintained and drive for 30 seconds or more.		

6. Park the vehicle in a safe location.
   NOTE:
   There are no special restrictions on driving operations until you park at the safe location.
7. Follow the SSM4 on-screen instructions to check the DTC while the vehicle is idling. (Refer to ES - 28)

NOTE:
If no DTCs appear on the SSM screen, the defect has been removed.

Inspection steps

1	Performing of SSM4 [Active Test] ([Activate the VSV for Evap Control])

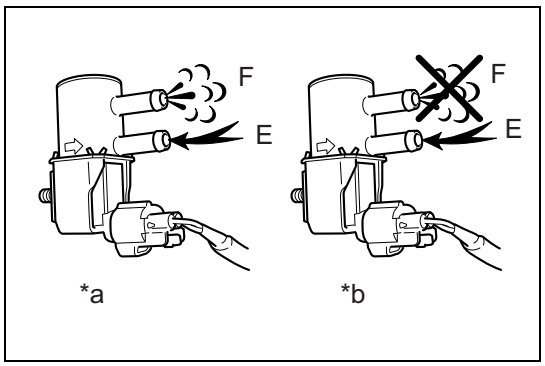

(1) Connect the SSM4 to the DLC3.
(2) Disconnect the vacuum hose (canister side) from the purge VSV.
(3) Start the engine.
(4) Turn on the SSM4.
(5) Select the following menu items using the SSM4. : [Each System] / [Engine Control System] / [Work Support] / [Active Test] / [Activate the VSV for Evap Control]
(6) When the SSM4 is used for purge VSV operation, check that you can feel suction from the purge VSV port with your finger.

Criteria

Tester operation	Tester operation
VSV ON	Suction from the purge VSV port can be felt by hand
VSV OFF	Suction from the purge VSV port cannot be felt by hand

Captions in illustration

*a	Purge VSV ON
*b	Purge VSV OFF

NG → Go to Step 3.

OK

2	Inspect parts for EVAP leakage

(1) Check for leakage from the EVAP system (Hoses, disconnections, cracks, etc.)
Criteria: No leakage from the EVAP purge line

NG → Go to Step 4.

OK

3	Purge valve replacement

(1) Replace the purge VSV. (Refer to EC - 16)

Next → Go to Step 5.

4	Repair or replacement of EVAP purge line

Next

5	Inspect the EVAP system (Evaporative system leak test)

(1) Connect the SSM4 to the DLC3.
(2) Turn the ignition switch to ON.
(3) Turn on the SSM4.
(4) Follow the SSM4 on-screen instructions to clear the DTCs. (Refer to ES - 28)
(5) Turn the ignition switch to OFF, and wait for 30 seconds.
(6) Turn the ignition switch to ON.
(7) Turn on the SSM4.
(8) Select the following menu items using the SSM4. : [OBD System] / [Each System] / [ECM Engine Control] / [On-Board System Test] / [Evaporative System Leak Test]
(9) Click the [OK] button to start the evaporative system leak test.
(10) The display with the message "Conditions have been enabled to control this function. Turn the ignition switch off to terminate the test." will appear. In this display, wait for 30 minutes without clicking the [OK] button.
(11) When 30 minutes has passed after finishing step 9, click the [OK] button.
(12) Return to the [OBD Menu] display and select [On-board monitor test result].
(13) Check TID $C1 to $CA of MID $3C in [On-board monitor test result].

Result of on-board monitor test

Display	Details	Remarks
$0000 is stored in every Val.	The test condition fails to be met during evaporative system leak test, and the test has been cancelled.	Re-run the test after ensuring that the test conditions are met.
Any value is stored in every Val. and every Result shows OK.	The evaporative system leak test is completed successfully.	Use the SSM4 to read the temporary code with IG ON.
Any one of the results is NG	The evaporative system leak test is completed successfully but there is an error in the results.	Use the SSM4 to read the temporary code with IG ON.

(14) When the evaporative system leak test is completed successfully, read the temporary code with IG ON. When any DTC is recorded, troubleshoot the appropriate DTC.
NOTE:
Turning IG to OFF will clear the temporary codes.

Result

Result	Go to
DTCs related to EVAP are output	A
No DTC is output (Pending DTCs are not displayed)	B

B → Complete

A

6	Replacement of engine control computer

(1) Replace the engine control computer. (Refer to ES - 670)

Next

7	Inspect the EVAP system (Evaporative system leak test)

(1) Connect the SSM4 to the DLC3.
(2) Turn the ignition switch to ON.
(3) Turn on the SSM4.
(4) Follow the SSM4 on-screen instructions to clear the DTCs. (Refer to ES - 28)
(5) Turn the ignition switch to OFF, and wait for 30 seconds.
(6) Turn the ignition switch to ON.
(7) Turn on the SSM4.
(8) Select the following menu items using the SSM4. : [OBD System] / [Each System] / [ECM Engine Control] / [On-Board System Test] / [Evaporative System Leak Test]
(9) Click the [OK] button to start the evaporative system leak test.
(10) The display with the message "Conditions have been enabled to control this function. Turn the ignition switch off to terminate the test." will appear. In this display, wait for 30 minutes without clicking the [OK] button.
(11) When 30 minutes has passed after finishing step 9, click the [OK] button.
(12) Return to the [OBD Menu] display and select [On-board monitor test result].
(13) Check TID $C1 to $CA of MID $3C in [On-board monitor test result].

Result of on-board monitor test

Display	Details	Remarks
$0000 is stored in every Val.	The test condition fails to be met during evaporative system leak test, and the test has been cancelled.	Re-run the test after ensuring that the test conditions are met.
Any value is stored in every Val. and every Result shows OK.	The evaporative system leak test is completed successfully.	Use the SSM4 to read the temporary code with IG ON.
Any one of the results is NG	The evaporative system leak test is completed successfully but there is an error in the results.	Use the SSM4 to read the temporary code with IG ON.

(14) When the evaporative system leak test is completed successfully, read the temporary code with IG ON. When any DTC is recorded, troubleshoot the appropriate DTC.
NOTE:
Turning IG to OFF will clear the temporary codes.

Next

Complete

DTC	P0451	ELCM evaporative emission control system pressure sensor performance

DTC	P0452	ELCM evaporative emission control system pressure sensor (continuity LOW)

DTC	P0453	ELCM evaporative emission control system pressure sensor (continuity HIGH)

ES

Circuit description

For a circuit description, refer to ES - 595.

DTC No.	Monitoring items	Error detection condition	Suspected parts	Detection timing	Detection logic
P0451	The difference in pressure between the canister pressure sensor and air pressure sensor	There is a large difference in pressure between the canister pressure sensor and air pressure sensor when the ignition is switched to IG ON	•Canister pump module •Connector/Harness connector (Canister pump module - ECM) •EVAP system hose (pipes, canister filters, fuel tank vent hoses from the air inlet port to the canister pump module) •ECM	IG ON	2 trip
P0452	Canister pressure sensor LOW input	EVAP pressure sensor is less than 0.973 V for one second		•IG ON •During EVAP monitoring (Ignition switch is OFF)	1 trip
P0453	Canister pressure sensor HIGH input	EVAP pressure sensor is 4.095 V or more for one second		•IG ON •During EVAP monitoring (Ignition switch is OFF)	1 trip

NOTE:

The canister pressure sensor is integrated into the canister pump module.

MONITOR DESCRIPTION

Canister Pressure Sensor Specification (fig.2)

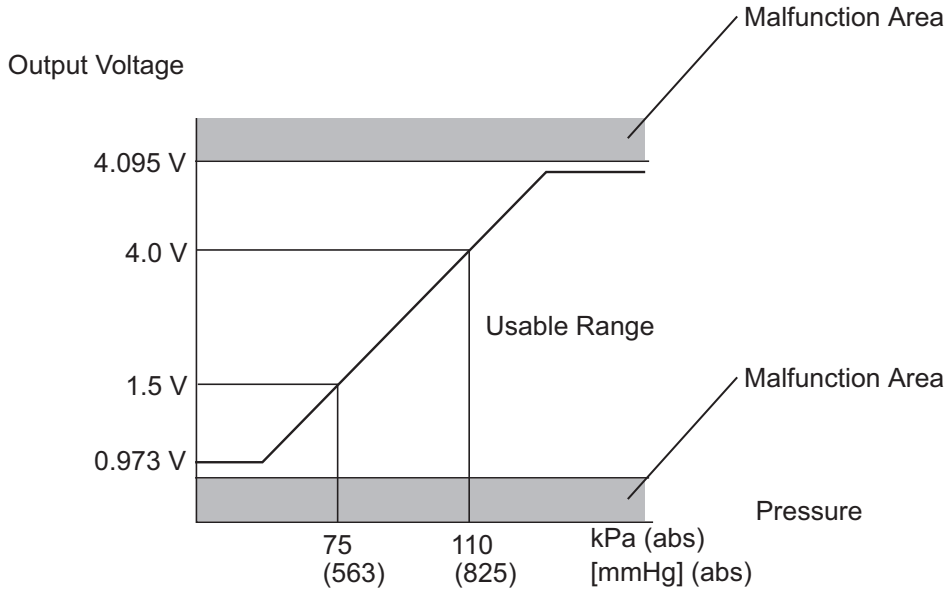

HINT:

Standard atmospheric pressure is 101.3 kPa (abs) [760 mmHg (abs)]

1. DTC P0451: The difference between the canister pressure sensor and the air pressure sensor output values
   When the difference in the atmospheric pressures calculated from the canister pressure sensor signal and the vacuum sensor signal exceeds the specified value, the ECM determines that a fault is present in the canister pressure sensor, the MIL is illuminated, and all DTCs are recorded. (2-trip detection logic)
2. DTC P0452: Canister pressure sensor voltage LOW
   When the canister pressure sensor voltage output (pressure) is 0.973V: 51.71 kPa (abs) [388 mmHg (abs)] or less, the ECM interprets this as being a canister pressure sensor open or short circuit error and stops the EVAP system monitor. In this case, the ECM turns on the MIL and records the DTC. (1-trip detection logic)
3. DTC P0453: Canister pressure sensor voltage HIGH
   When the canister pressure sensor voltage output (pressure) is 4.095 V: 108.99 kPa (abs) {818 mmHg (abs), 32.2 inHg (abs), 15.8 psi (abs)} or more, the ECM judges this as open/short condition in the canister pressure sensor circuit, and stops the EVAP system monitor. In this case, the ECM turns on the MIL and records the DTC. (1-trip detection logic)

Monitor strategy

Related DTCs	P0451: ELCM pressure sensor rationality P0452: ELCM pressure sensor range check (Low voltage) P0453: ELCM pressure sensor range check (High voltage)
Frequency of Operation	Once per driving cycle: P0451 Continuous: P0452, P0453
Duration	0.32 seconds: P0451 1 second: P0452, P0453
MIL Operation	2 driving cycles: P0451 Immediately after: P0452, P0453
Sequence of Operation	None

TYPICAL ENABLING CONDITIONS

All

Overlap prohibited DTC	None

P0451

Elapsed time after the ignition switch is turned to ON	0.5 to 60 seconds
Soak time	60 seconds or more
Evaporative leak check module vacuum pump	Control not in progress
Evaporative leak check module switching valve	OFF (open)
Purge control	0%

P0452, P0453

Battery Voltage	10.9V or more
When one of the following conditions is met.	A or B
A. Ignition switch	ON
B. Startup by soak timer	Satisfied

TYPICAL MALFUNCTION THRESHOLDS

P0451

|Pressure in the evaporative system leak check module when the ignition switch is turned to ON - manifold pressure when the ignition switch is turned to ON|	More than 4.733 kPa {36 mmHg, 1.4 inHg, 0.7 psi}

P0452

ELCM pressure sensor output voltage [ELCM Pressure]	Less than 0.973 V [51.71 kPa {388 mmHg, 15.3 inHg, 7.5 psi}]

P0453

ELCM pressure sensor output voltage [ELCM Pressure]	4.095 V [108.99 kPa {818 mmHg, 32.2 inHg, 15.8 psi}] or more

Operation range

ELCM pressure sensor output voltage [ELCM Pressure]	1.016 to 4.087V [52.49 to 108.85kPa {394 to 817mmHg, 15.5 to 32.1inHg, 7.6 to 15.8psi}]

Monitoring result

Refer to [Monitor status check]. (Refer to ES - 24)

Circuit figure

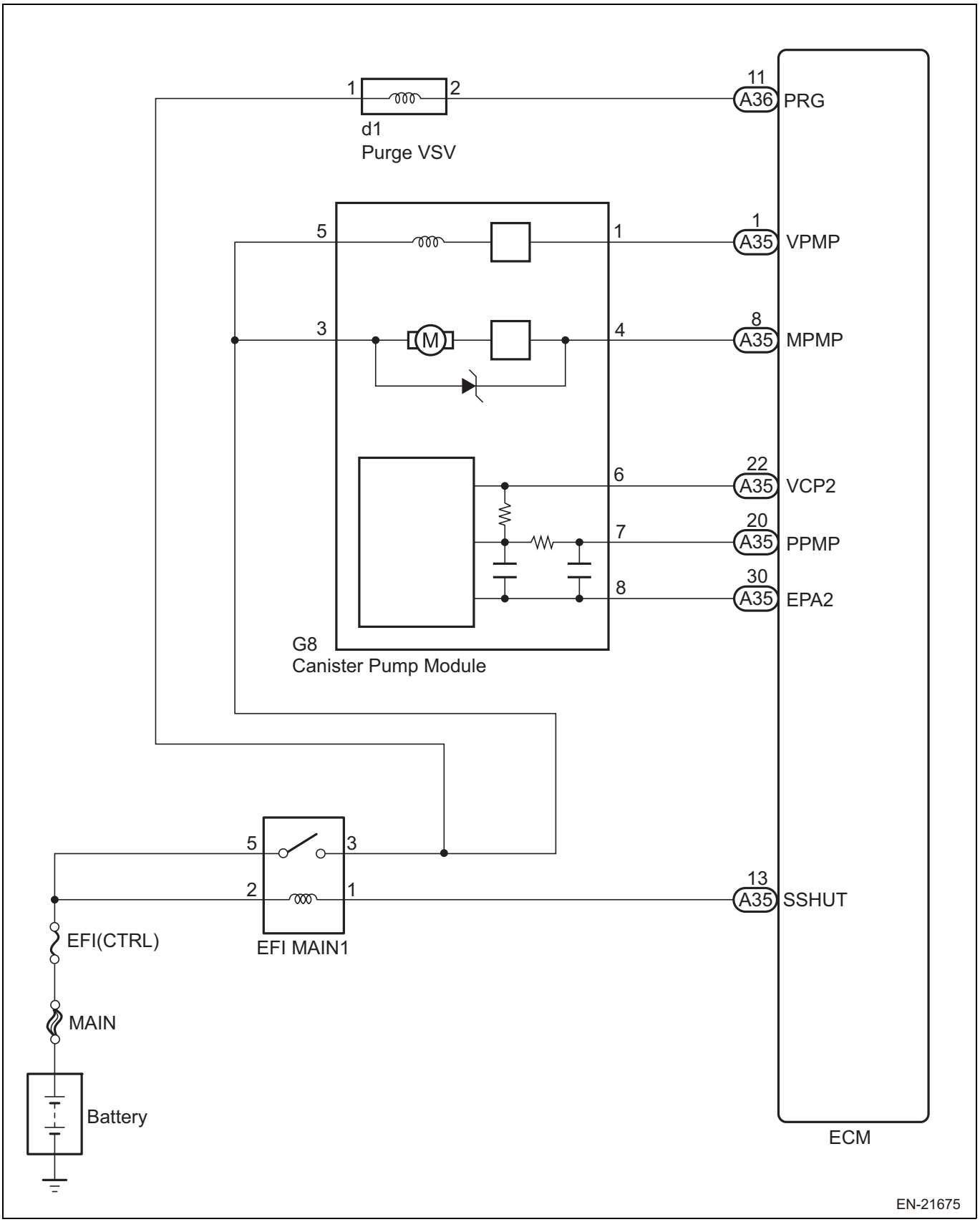

Description of functions

Test drive (P0451)

Perform test drive to check if the DTC recurs.

1. Connect the SSM4 to the DLC3.
2. Turn the ignition switch to ON.
3. Turn on the SSM4.
4. Follow the SSM4 on-screen instructions to clear the DTCs. (Refer to ES - 28)
5. Turn the ignition switch to OFF, and wait for 30 seconds.
6. Turn the ignition switch to ON.
7. Turn on the SSM4.
8. Select the following menu items using the SSM4. : [Each System] / [Engine Control System] / [Data monitor] / [Coolant Temp./ Intake Air Temp.]
9. Confirm that the engine coolant temperature and intake air temperature meet the condition described below.
   Condition: |Engine coolant temperature - intake air temperature| is 5°C {9°F} or less
   NOTE:
   If the condition is not met, turn the ignition switch to OFF, and wait until the condition is met.
10. If the condition is met, start the engine, and let it idle for 2 minutes or more.
    NOTE:
    Do not move the select lever from "P" or "N" range while the engine is idling.
11. Follow the SSM4 on-screen instructions to check the DTC. (Refer to ES - 28)

Test drive (P0452, P0453)

Perform test drive to check if the DTC recurs.

1. Connect the SSM4 to the DLC3.
2. Turn the ignition switch to ON.
3. Turn on the SSM4.
4. Follow the SSM4 on-screen instructions to clear the DTCs. (Refer to ES - 28)
5. Turn the ignition switch to OFF, and wait for 30 seconds.
6. Turn the ignition switch to ON.
7. Turn on the SSM4.
8. Start the engine.
   NOTE:
   If the engine cannot be started, crank the engine for 10 seconds or more.
9. Idle the engine for 20 seconds or more.
10. Follow the SSM4 on-screen instructions to check the DTC. (Refer to ES - 28)

Inspection steps

CAUTION:

- Once the car has been brought in, leave it as it is. Be sure that you do not change the vehicle condition. For example, do not tighten the fuel cap.
- Do not disassemble the canister pump module.
- A SSM4 is required for the following diagnosis troubleshooting procedures.
- Check fuses of the circuits related to this system before performing the following inspection steps.

1	Check the DTC and EVAP pressure

(1) Connect the SSM4 to the DLC3.
(2) Turn the ignition switch to ON. (Do not start the engine)
(3) Turn on the SSM4.
(4) Follow the display on the SSM4 to check the DTC. (Refer to ES - 28)
(5) Select the following menu items using the SSM4. : [Each System] / [Engine Control System] / [Data monitor] / [Absolute Evap Sys. Pressure]
(6) Read the EVAP (evaporative gas) pressure displayed on the SSM4.

Result

Display (DTC output)	Inspection results	Possible faulty parts	Go to
P0451	-	•Canister pressure sensor •Air pressure sensor	C

Display (DTC output)	Inspection results	Possible faulty parts	Go to
P0452	75 kPa (abs) {563 mmHg (abs), 22.2 inHg (abs), 10.9 psi (abs)} or less	•Wiring harness/Connector (ECM - Canister pressure sensor) •Canister pressure sensor •Short circuit in the ECM circuit	A
P0453	110 kPa (abs) {825 mmHg (abs), 32.5 inHg (abs), 15.9 psi (abs)} or more	•Wiring harness/Connector (ECM - Canister pressure sensor) •Canister pressure sensor •Open circuit in the ECM circuit	B

ES

B → Go to Step 5.

C → Go to Step 8.

A

2 Check wiring harness and connector (canister pump module - ECM)

NOTE:
Refer to IN - 6for inspection procedure and precautions of wiring harness and connector.

(1) Turn the ignition switch to OFF.
(2) Disconnect the ECM connector.
(3) Measure the resistance between the terminals. (Refer to ES - 36)

Result

Inspection terminals	Inspection conditions	Standard value	Possible faulty parts	Go to
A35-20 (PPMP) - Chassis ground	Always	Less than 10 Ω	•Wiring harness/Connector (ECM - Canister pressure sensor) •Canister pressure sensor circuit shorted	A
		10 k Ωor more	•Wiring harness/Connector (ECM - Canister pressure sensor) •Short circuit in the ECM circuit	B

B → Go to Step 8.

A

3 Check wiring harness and connector (canister pump module - ECM)

(1) Disconnect the canister pump module connector.
(2) Disconnect the ECM connector.
(3) Measure the resistance between the terminals. (Refer to ES - 36)

Result

Inspection terminals	Inspection conditions	Standard value	Possible faulty parts	Go to
A36-20 (PPMP) - Chassis ground	Always	10 k Ωor more	Canister pressure sensor circuit shorted	A
		Less than 10 Ω	Wiring harness/Connector (ECM - Canister pressure sensor)	B

A → Go to Step 6.

B → Go to Step 7.

4	Check wiring harness and connector (canister pump module - ECM)

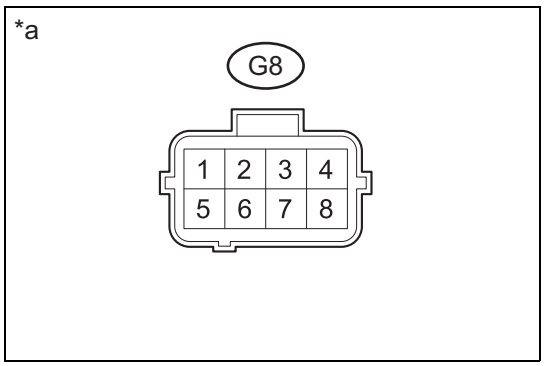

(1) Disconnect the canister pump module connector.
(2) Measure the resistance between the terminals.

Resistance

Inspection terminals	Inspection conditions	Standard value
G8-8 - chassis ground	Always	100 Ωor less

(3) Turn the ignition switch to ON.
(4) Measure the voltage between the terminals.

Voltage

Inspection terminals	Inspection conditions	Standard value
G8-6 - chassis ground	IG ON	4.5 to 5.5V
G8-7 - chassis ground	IG ON	4.5 to 5.5V

Result

Inspection results	Possible faulty parts	Go to
Voltage and resistance within the standard range	Canister pressure sensor circuit open	A
Voltage and/or resistance outside of the standard range	Open circuit in wiring harness/connector (ECM - canister pressure sensor)	B

Captions in illustration

*a	Front side of vehicle wiring harness connector (Proceed to "Canister pump module")

B → Go to Step 7.

A

5	Replacement of canister pump module

(1) Replace the canister pump module. (Refer to EC - 7)

Next → Go to Step 12.

6	Repair or replacement of wiring harness or connector (Canister - ECM)

Next → Go to Step 12.

7	Replacement of engine control computer

(1) Replace the engine control computer. (Refer to ES - 670)

Next → Go to Step 12.

8	Reading of SSM4 data (atmospheric pressure)

(1) Connect the SSM4 to the DLC3.

(2) Turn the ignition switch to ON.
(3) Turn on the SSM4.
(4) Select the following menu items using the SSM4. : [Each System] / [Engine Control System] / [Data monitor] / [Atmosphere Pressure]
(5) Compare [Atmosphere Pressure] displayed on the SSM4 with the actual atmospheric pressure.

Result

Result	Go to
Difference between [Atmosphere Pressure] and actual atmospheric pressure is 23.6 kPa {177 mmHg, 7 inHg, 3.4 psi} or less.	A
Difference between [Atmosphere Pressure] and actual atmospheric pressure is 23.6 kPa {177 mmHg, 7 inHg, 3.4 psi} or more.	B

ES

B → Go to Step 10.

A

9	Reading of SSM4 data ([Mani. Absolute Pressure])

(1) Connect the SSM4 to the DLC3.
(2) Turn the ignition switch to ON.
(3) Turn on the SSM4.
(4) Select the following menu items using the SSM4. : [Each System] / [Engine Control System] / [Data monitor] / [Mani. Absolute Pressure]
(5) Compare [Mani. Absolute Pressure] displayed on the SSM4 with the actual atmospheric pressure.

Result

Result	Go to
Difference between [Mani. Absolute Pressure] and actual atmospheric pressure is 23.6 kPa {177 mmHg, 7 inHg, 3.4 psi} or less.	A
Difference between [Mani. Absolute Pressure] and actual atmospheric pressure is 23.6 kPa {177 mmHg, 7 inHg, 3.4 psi} or more.	B

B → Go to Step 11.

A

Inspection for problems that do not normally occur (Refer to ES - 28)

10	Replacement of canister pump module

(1) Replace the canister pump module. (Refer to EC - 7)

Next → Go to Step 12.

11	Replacement of the pressure sensor ASSY

(1) Replace the air pressure sensor ASSY. (Refer to ES - 705)

Next → Go to Step 12.

12	Recheck DTCs (after repair)

(1) Connect the SSM4 to the DLC3.
(2) Turn the ignition switch to ON.
(3) Turn on the SSM4.
(4) Follow the SSM4 on-screen instructions to clear the DTCs. (Refer to ES - 28)
(5) Turn the ignition switch to OFF, and wait for 30 seconds.
(6) Turn the ignition switch to ON.
(7) Turn on the SSM4.
(8) Perform test drive. (Refer to "Test drive" under "Description of functions")
(9) Follow the SSM4 on-screen instructions to check the DTC. (Refer to ES - 28)
(10) If there are no pending DTCs, repair has been successfully completed.

Next

Complete

DTC	P0455	Evaporative emission control system leak detected (gross leak)
DTC	P0456	Evaporative Emission Control System Leak Detected (very small leak)
DTC	P1451	Fuel tank pressure sensor range/performance
DTC	P2404	Evaporative emission system leak detection pump sense circuit range/performance

Circuit description
For a circuit description, refer to ES - 595.

ES

DTC No.	Monitoring items	Error detection condition	Suspected parts	Detection timing	Detection logic
P0455	Large leak from EVAP	The leak detection pump generating negative EVAP system pressure (vacuum), EVAP system pressure measurement. Standard pressure measurement before and after the leakage inspection. When the stabilized pressure reaches or exceeds the [Second standard pressure ×0.377 - (-45.5)], the ECM determines that the EVAP system is experiencing a gross leak.	• Fuel cap (Looseness) • Leakage from the EVAP line (Canister - Fuel tank) • Leakage from the EVAP line (Purge VSV - Canister) • Leakage from the canister pump module • Leakage from the fuel tank • Leakage from the canister	When the ignition switch is OFF	2 trip
P0456	Small leak from EVAP	The leak detection pump generating negative EVAP system pressure (vacuum), EVAP system pressure measurement. Standard pressure measurement before and after the leakage inspection. When the stabilized pressure drops below [Second standard pressure ×0.377 - (-45.5)], the ECM determines that the EVAP system is experiencing a small leak.		When the ignition switch is OFF	2 trip
P1451	EVAP clogging	EVAP system clogging detected	• EVAP line clogging (Canister - Fuel tank) • EVAP line clogging (Purge VSV - Canister) • Canister pump module clogging	When the ignition switch is OFF	2 trip
P2404	EVAP error	The last pressure for the leak detection pump exceeds the threshold value. The difference between the leak detection pump maximum and minimum pressures exceeds the threshold value. Vent valve error detected	• Leak detection pump	When the ignition switch is OFF	2 trip

MONITOR DESCRIPTION

When 5 hours*1 passes after the ignition switch is turned to OFF, the leak detection pump generates a negative pressure (vacuum) inside the EVAP (evaporative gas) system. The ECM monitors any possible leaks and the actuator functions based on the EVAP pressure.

NOTE:

*: If valid conditions are not satisfied even when 5 hours passes after the ignition switch is turned to OFF, monitor inspection commences after 2 hours.

If valid conditions are not satisfied even when 7 hours passes after the ignition switch is turned to OFF, monitor inspection commences after 2.5 hours.

Order	Operation	Duration
A	Leak detection pump monitoring	7 seconds

Order	Operation	Duration
B	First standard pressure measurement	350 seconds
C	Vent valve monitoring	12 seconds
D	Pipe blockage monitoring	900 seconds
E	Second standard pressure measurement	50 seconds
	Pipe leak monitoring	

*: When the amount of fuel in the fuel tank becomes low, it can take more time for the EVAP pressure to stabilize.

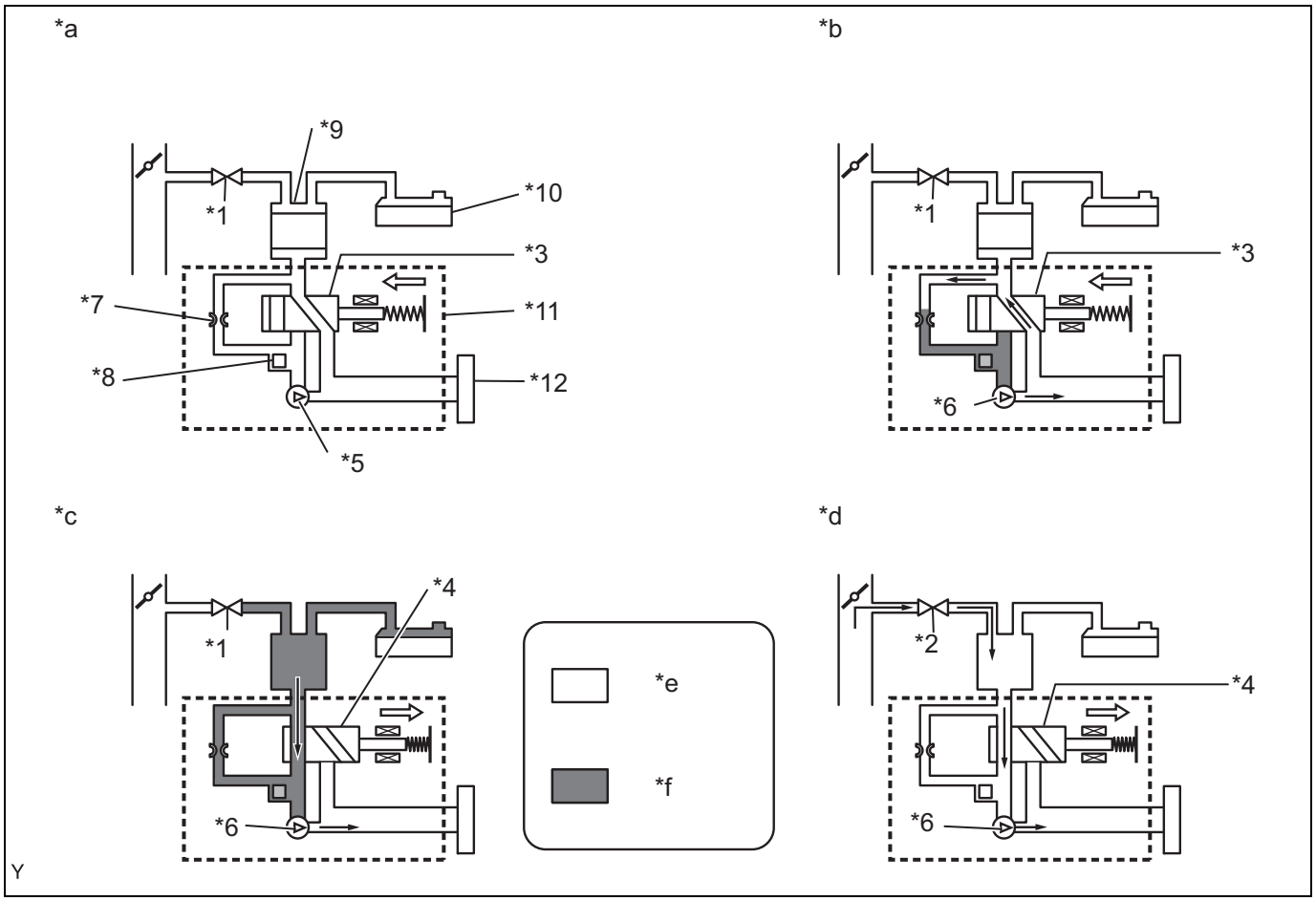

Captions in illustration

*1	Purge VSV: OFF (Closed)	*2	Purge VSV: ON (Open)
*3	Vent valve: OFF (Vent)	*4	Vent valve: ON (Closed)
*5	Leak detection pump: OFF	*6	Leak detection pump: ON
*7	Reference orifice (0.02 inch)	*8	Canister pressure sensor
*9	Canister	*10	Fuel tank
*11	Canister pump module	*12	Canister filter
*a	Operation A: Atmosphere pressure measurement	*b	Operation B, E: Standard pressure measurement
*c	Operation C: EVAP system pressure measurement	*d	Operation D: Purge VSV monitoring
*e	Atmospheric pressure	*f	Negative pressure

(a) P0455: EVAP (evaporative gas) gross leak

In operation C, The leak detection pump generates negative EVAP system pressure (vacuum) and measures the EVAP system pressure. When the stabilized system pressure reaches or exceeds the [Second standard pressure ×0.377 - (-45.5)] (approach-

ing atmospheric pressure), the ECM determines that the EVAP system is experiencing a gross leak. It illuminates the MIL and records DTCs. (2 trip detection logic)

(b) P0456: EVAP small leak

In operation C, The leak detection pump generates negative EVAP system pressure (vacuum) and measures the EVAP system pressure. When the stabilized system pressure drops below [Second standard pressure ×0.377 - (-45.5)], the ECM determines that the EVAP system is experiencing a small leak. It illuminates the MIL and records DTCs. (2 trip detection logic)

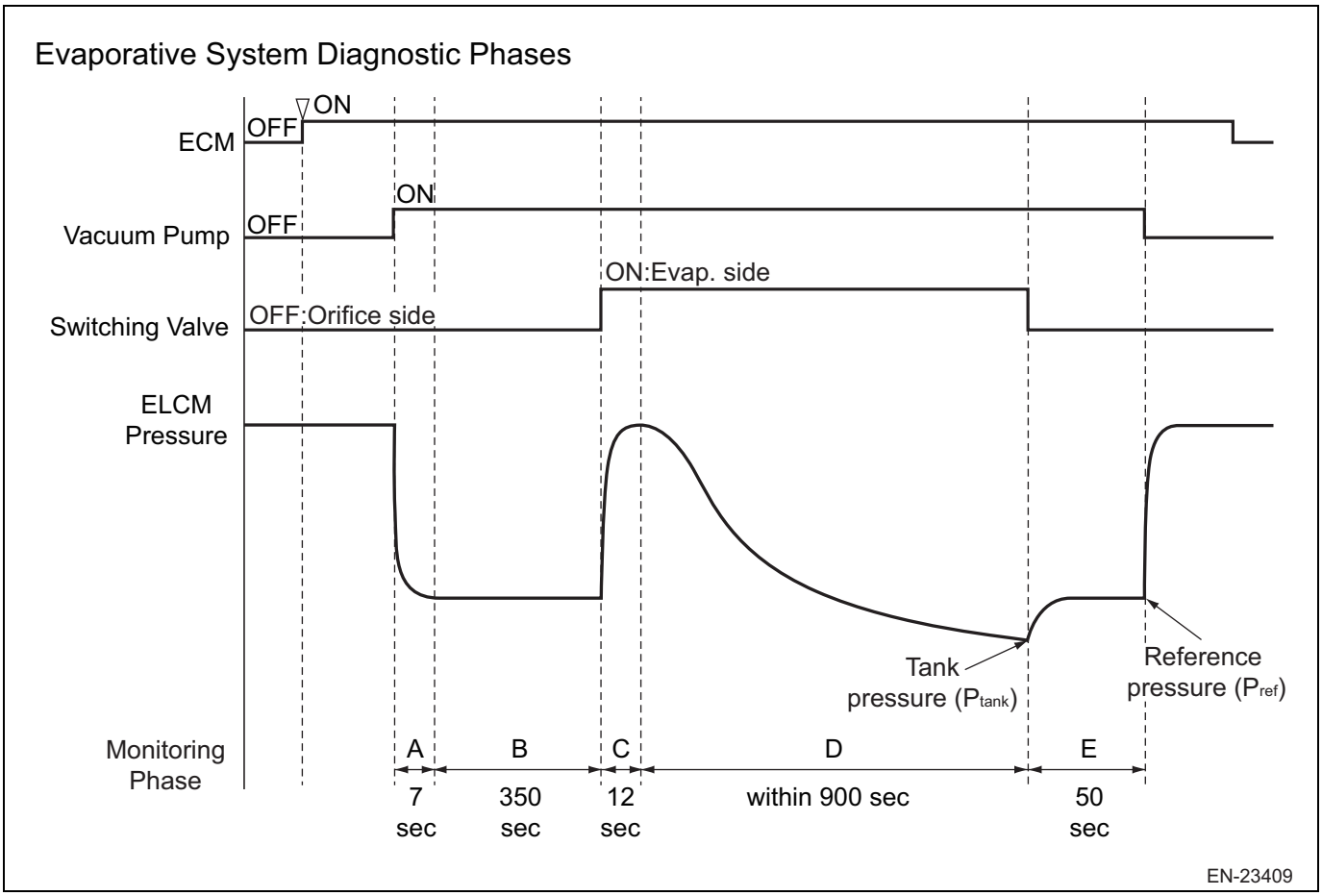

Monitor strategy

Related DTCs	P0455: Evaporative system functional check (0.040 inch leak) P0456: Evaporative system functional check (0.020 inch leak) P1451: Evaporative system functional check (Pipe clogging) P2404: Evaporative system functional check (ELCM performance)
Required Sensors/Components	Purge VSV and canister pump module
Frequency of Operation	Once per driving cycle: P0455, P0456 , P1451, and P2404
Duration	23 minutes
MIL Operation	2 operation cycle
Sequence of Operation	None

TYPICAL ENABLING CONDITIONS

All

Overlap prohibited DTC	None

P0455, P0456, P1451, P2404

Leaving time	5, 7, or 9.5 hours
Battery Voltage	10.9V or more

Engine coolant temperature	4.4 to 45°C {39.9 to 113°F}
Atmospheric pressure	75.06 kPa (abs) {563.09 mmHg (abs), 22.169 inHg (abs), 10.884 psi (abs)} or more
Intake air temperature	4.4°C {39.9°F} or more
Engine oil temperature	4.4°C {39.9°F} or more
Purge air flow cumulative value for previous driving cycle	96 g or more (May change depending on engine coolant temperature)

TYPICAL MALFUNCTION THRESHOLDS

P0455

Phase E: Tank pressure	[Second standard pressure ×0.377 Pa - (-45.5 Pa)] or more

P0456

Phase E: Tank pressure	Less than [Second standard pressure ×0.377 Pa - (-45.5 Pa)]

P1451

Phase D: Time required for the standard pressure during function inspection to reach -0.941 kPa or 4.9726 kPa {-7 mmHg or 37 mmHg, -0.3 inHg or 1.5 inHg, -0.1 psi or 0.7 psi}	27 seconds or less

P2404

When one of the following conditions is met.	Phase A, B, C, or E
Phase A: Final pressure in operation A	More than -0.224 kPa {-2 mmHg, -0.07 inHg, -0.03 psi}
Phase B: Maximum pressure - minimum pressure in operation B or Standard pressure during the function inspection in operation B or Final pressure in operation B	More than 0.314 kPa {2 mmHg, 0.09 inHg, 0.05 psi} Less than -3.9717 kPa {-30 mmHg, -1.2 inHg, -0.58 psi} More than 0.9419 kPa {7 mmHg, 0.28 inHg, 0.14 psi} (varies depending on the air pressure)
Phase C: Final pressure - standard pressure during the function inspection in operation C	Less than 0.224 kPa {2 mmHg, 0.07 inHg, 0.03 psi}
Phase E: Maximum pressure - minimum pressure in operation E or Final pressure in operation E or Final pressure - standard pressure during the function inspection in operation B	More than 0.314 kPa {2 mmHg, 0.09 inHg, 0.05 psi} Less than -4.536 kPa {-34 mmHg, -1.34 inHg, -0.66 psi} or more than -0.824 kPa {-6 mmHg, -0.24 inHg, -0.12 psi} (varies depending on the air pressure) More than 0.941 kPa {7 mmHg, 0.28 inHg, 0.14 psi}

Monitoring result

Refer to [Monitor Status Check] (Refer to ES - 24)

Circuit figure

For circuit figure, refer to ES - 346.

Description of functions

Test drive

1. Connect the SSM4 to the DLC3.
2. Turn the ignition switch to ON.
3. Turn on the SSM4.
4. Follow the SSM4 on-screen instructions to clear the DTCs. (Refer to ES - 28)
5. Turn the ignition switch to OFF, and wait for 30 seconds.

6. Turn the ignition switch to ON.
7. Turn on the SSM4.
8. Select the following menu items using the SSM4. : [OBD System] / [Each System] / [ECM Engine Control] / [On-Board System Test] / [Evaporative System Leak Test]
9. Click the [OK] button to start the evaporative system leak test.
   CAUTION:
   - When performing the evaporative system leak test continuously, pay attention to the battery condition. If the evaporative system leak test is repeatedly performed without starting the engine, the battery voltage will drop and may cause run-out of the battery.
   - Do not leave the vehicle for a prolonged period with the evaporative system leak test performed. This may cause an early deterioration of the battery or cause a battery discharge.

   NOTE:
   - When performing the evaporative system leak test continuously, drive the vehicle under the following conditions, and release the accumulated evaporative emission. If the evaporative system leak test is continuously performed with the engine stopped, a large amount of evaporative emission is accumulated into the canister, which may prevent correct diagnosis.
     – After warming-up
     – Drive at 48 km/h {30 MPH} or more for 10 minutes or more. (It may be the accumulated driving time.)
   - Observe the following items for operation to obtain correct diagnostic result.
     – Do not refuel the vehicle before performing the evaporative system leak test. Because a large amount of evaporative emission is generated in the fuel tank immediately after refueling the vehicle, the accuracy of the diagnosis may be reduced.
     – Do not shake the vehicle while the evaporative system leak test is being performed. Rocking the vehicle will increase the evaporative emission in the fuel tank, which may reduce the accuracy of the diagnosis.
     – During evaporative system leak test, do not perform any service operation including removal/installation of the parts and connectors. Otherwise, the service operation may affect the related parts, and the accuracy of the diagnosis can be reduced.
10. The display with the message "Conditions have been enabled to control this function. Turn the ignition switch off to terminate the test." will appear. In this display, wait for 30 minutes without clicking the [OK] button.
    NOTE:
    - If you click the [OK] button, it will return to the [Evaporative System Leak Test] display. However, the evaporative system leak test is still being performed.
    - The display of the SSM4 will not change both when the evaporative system leak test is successfully completed and when the test is canceled by turning IG to OFF.
    - If the [Test conditions are not correct] screen is displayed, use the SSM4 to confirm that the [Coolant Temp.] and [Intake Air Temp.] values satisfy the conditions. When the values are within the specification, perform the evaporative system leak test.
11. When 30 minutes has passed after finishing step 9, click the [OK] button.
12. Return to the [OBD Menu] display and select [On-board monitor test result].
13. Check TID $C1 to $CA of MID $3C in [On-board monitor test result].

Result of on-board monitor test

Display	Details	Remarks
$0000 is stored in every Val.	The test condition fails to be met during evaporative system leak test, and the test has been cancelled.	Re-run the test after ensuring that the test conditions are met.
Any value is stored in every Val. and every Result shows OK.	The evaporative system leak test is completed successfully.	Use the SSM4 to read the temporary code with IG ON.
Any one of the results is NG	The evaporative system leak test is completed successfully but there is an error in the results.	Use the SSM4 to read the temporary code with IG ON.

14. When the evaporative system leak test is completed successfully, read the temporary code with IG ON. When any DTC is recorded, troubleshoot the appropriate DTC.
    NOTE:
    Turning IG to OFF will clear the temporary codes.

Inspection steps

P0455, P0456

1	Read DTC

(1) Connect the SSM4 to the DLC3.
(2) Turn the ignition switch to ON.
(3) Perform test drive. (Refer to "Test drive" under "Description of functions")
(4) Follow the SSM4 on-screen instructions to check the DTC. (Refer to ES - 28)

Result

Result	Go to
P0455 or P0456 is output.	A
P0455 or P0456 and other DTCs are output.	B

B → To corresponding DTC chart (refer to ES - 12)

A

2	Inspection of fuel cap ASSY

(1) Check that the fuel cap is installed correctly and that it is the genuine part.
(2) Tightly close the fuel cap. (Until you hear a click)

Result

Inspection results	Possible faulty parts	Go to
The fuel cap is properly installed	-	A
The fuel cap is loose	• The fuel cap is not properly installed • The fuel cap is faulty. • The fuel cap does not meet OEM specifications	B
The fuel cap is faulty.	-	B
No fuel cap	-	C

B → Go to Step 4.

C → Go to Step 5.

A

3	Inspect parts for EVAP leakage

(1) Check for leakage from the EVAP system (Hoses, disconnections, cracks, etc.)
(2) Repair or replace and parts that are leaking

Next → Go to Step 6.

4	Reinstallation or replacement of fuel cap ASSY

NOTE:
- When reinstalling the fuel cap, be sure that it is tight and secure. (Until you hear a click)
- When replacing the fuel cap, confirm that you are using a genuine part and make sure it is installed securely.

Next → Go to Step 6.

ES

5	Replacement of fuel cap ASSY

NOTE:
When reinstalling the fuel cap, be sure that it is tight and secure. (Until you hear a click)

Next → Go to Step 6.

6	Read DTC

(1) Connect the SSM4 to the DLC3.
(2) Turn the ignition switch to ON.
(3) Follow the SSM4 on-screen instructions to clear the DTCs. (Refer to ES - 28)
(4) Turn the ignition switch to OFF, and wait for 30 seconds.
(5) Perform test drive. (Refer to "Test drive" under "Description of functions")
(6) Follow the SSM4 on-screen instructions to check the DTC. (Refer to ES - 28)

Result

Result	Go to
DTCs related to EVAP are output	A
No DTC is output (Pending DTCs are not displayed)	B

B → Complete

A

7	Replacement of engine control computer

(1) Replace the engine control computer. (Refer to ES - 670)

Next

8	Read DTC

(1) Connect the SSM4 to the DLC3.
(2) Turn the ignition switch to ON.
(3) Follow the SSM4 on-screen instructions to clear the DTCs. (Refer to ES - 28)
(4) Turn the ignition switch to OFF, and wait for 30 seconds.

(5) Perform test drive. (Refer to "Test drive" under "Description of functions")
(6) Follow the SSM4 on-screen instructions to check the DTC. (Refer to ES - 28)

NOTE:
If there are no pending DTCs, repair has been successfully completed.

Next

Complete

ES

P1451

1	Read DTC

(1) Connect the SSM4 to the DLC3.
(2) Turn the ignition switch to ON.
(3) Perform test drive. (Refer to "Test drive" under "Description of functions")
(4) Follow the SSM4 on-screen instructions to check the DTC. (Refer to ES - 28)

Result

Result	Go to
P1451 is output	A
DTCs other than P1451 are output	B

B → To corresponding DTC chart (refer to ES - 12)

A

2	Inspect the EVAP hose (Canister - Canister pump module)

(1) Check for any clogging in the drain tube between the canister and the canister pump module.
Criteria: No clogging in the drain tube between the canister and the canister pump module

NG → Go to Step 5.

OK

3	Inspect the EVAP hose (Canister - Fuel tank)

(1) Check for any clogging in the fuel tank vent tube between the canister and the fuel tank.
Criteria: No clogging in the fuel tank vent tube between the canister and the fuel tank

OK → Go to Step 4.

NG → Go to Step 5.

4	Canister replacement

(1) Replace the canister. (Refer to EC - 7)

CAUTION:

- When replacing the canister, inspect the inside of the canister pump module, as well as any other related pipes for water/fuel/other liquids. If there is any liquid leakage, inspect the connection condition and check for cracking in: 1) The pipe from the canister pump module to the air inlet port, 2) The canister filter, and 3) The fuel tank vent hose.
- Inspect for clogging of the canister internal filter.
  If the canister filter is clogged, replace the canister pump module.

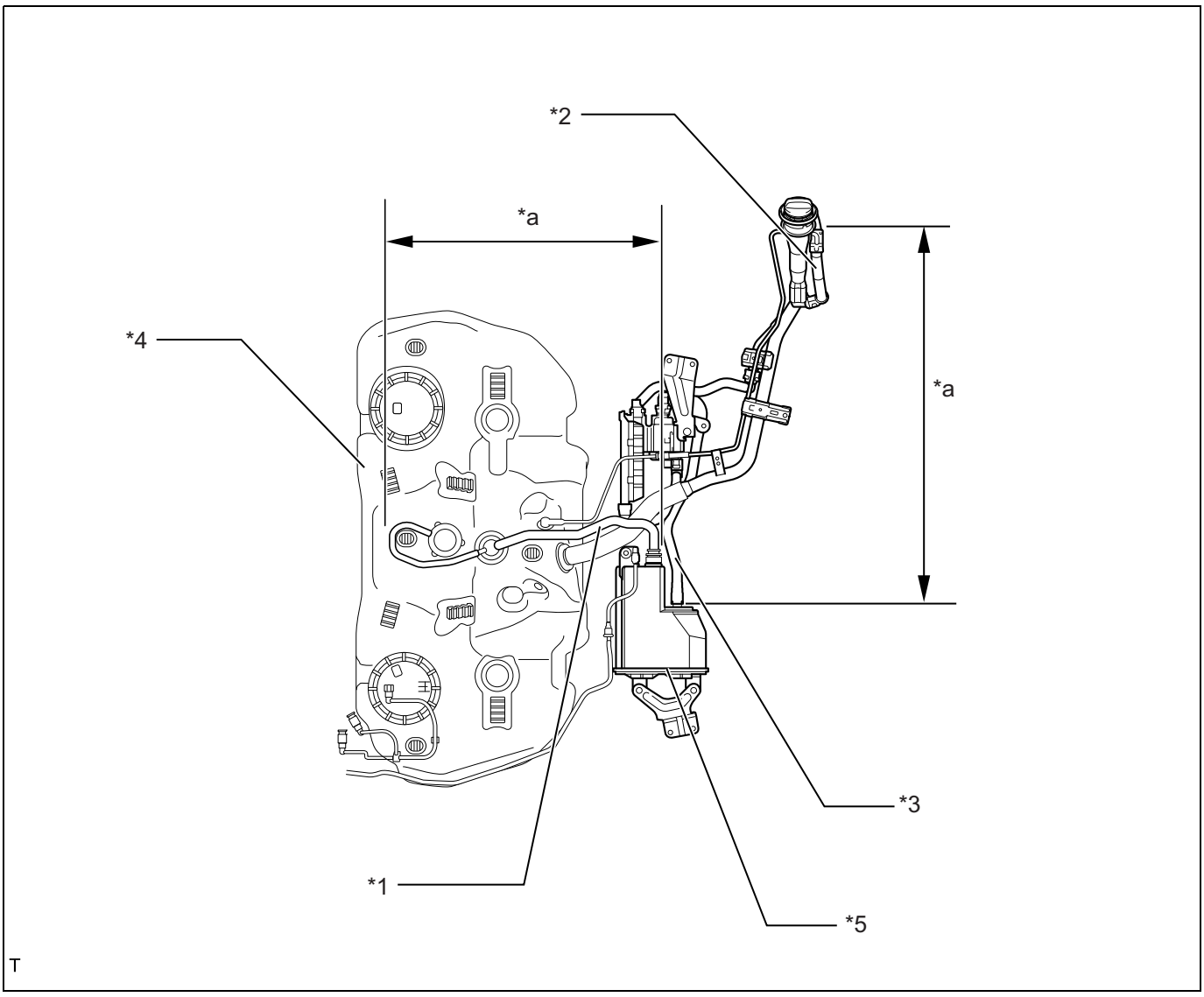

T

Captions in illustration

*1	Fuel tank vent tube	*2	Air inlet port
*3	Drain tube	*4	Fuel tank
*5	Canister	-	-
*a	Inspection items (Inspect the connection condition and/or cracking)	-	-

Next → Go to Step 6.

5	Repair or replace the purge VSV line (Purge VSV - Canister)

Next → Go to Step 6.

Next

6	Read DTC

(1) Connect the SSM4 to the DLC3.
(2) Turn the ignition switch to ON.
(3) Follow the SSM4 on-screen instructions to clear the DTCs. (Refer to ES - 28)
(4) Turn the ignition switch to OFF, and wait for 30 seconds.
(5) Perform test drive. (Refer to "Test drive" under "Description of functions")
(6) Follow the SSM4 on-screen instructions to check the DTC. (Refer to ES - 28)

Result

Result	Go to
DTCs related to EVAP are output	A
No DTC is output (Pending DTCs are not displayed)	B

B → Complete

A

7	Replacement of engine control computer

(1) Replace the engine control computer. (Refer to ES - 670)

Next

8	Read DTC

(1) Connect the SSM4 to the DLC3.
(2) Turn the ignition switch to ON.
(3) Follow the SSM4 on-screen instructions to clear the DTCs. (Refer to ES - 28)
(4) Turn the ignition switch to OFF, and wait for 30 seconds.
(5) Perform test drive. (Refer to "Test drive" under "Description of functions")
(6) Follow the SSM4 on-screen instructions to check the DTC. (Refer to ES - 28)

NOTE:
If there are no pending DTCs, repair has been successfully completed.

Next

Complete

P2404

1	Read DTC

(1) Connect the SSM4 to the DLC3.
(2) Turn the ignition switch to ON.
(3) Perform test drive. (Refer to "Test drive" under "Description of functions")
(4) Follow the SSM4 on-screen instructions to check the DTC. (Refer to ES - 28)

ES

Result

Result	Go to
P2404 is output	A
DTCs other than P2404 are output	B

B → To corresponding DTC chart (refer to ES - 12)

A

2	Performing of SSM4 active test (ELCM pump)

(1) Connect the SSM4 to the DLC3.
(2) Turn the ignition switch to ON.
(3) Select the following menu items using the SSM4. : [Each System] / [Engine Control System] / [Work Support] / [Active Test] / [ELCM pump]
(4) In [Active Test], check for the operating sound when the ELCM pump is started.
Criteria: Operating sound is heard.

OK → Go to Step 5.

NG → Go to Step 3.

3	Canister pump module inspection (Leak detection pump power supply)

*a

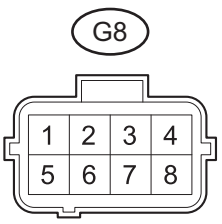

(1) Turn the ignition switch to OFF.
(2) Disconnect the canister pump module connector.
(3) Turn the ignition switch to ON.
(4) Measure the voltage between the terminals. (For terminal arrangement, refer to ES - 36.)

Result

Inspection terminals	Inspection conditions	Inspection results	Possible faulty parts	Go to
G8-3 - chassis ground	IG ON	11 to 14V	Canister pump module	A
		Less than 1V	The connector and wiring harness between the leak detection pump and battery	B

A → Go to Step 4.

B → Go to Step 7.

ES

4	Check wiring harness and connector (canister pump module - ECM)

NOTE:
For the inspection procedure and precautions for wiring harnesses and connectors, refer to IN - 36.

(1) Turn the ignition switch to OFF.
(2) Disconnect the canister pump module connector.
(3) Disconnect the ECM connector.
(4) Measure the resistance between the terminals. (For terminal arrangement, refer to ES - 36.)

Resistance

Inspection terminals	Inspection conditions	Standard value
A35-8(MPMP) - G-8-4	Always	Less than 1 Ω
A35-8 (MPMP) or G-8-4 - chassis ground	Always	10 k Ωor more

Result

Result	Possible faulty parts	Go to
OK	ECM	A
NG	Connector or wiring harness between the ECM and canister pump module	B

A → Go to Step 8.

B → Go to Step 7.

5	Performing of SSM4 active test ([ELCM switching valve])

(1) Connect the SSM4 to the DLC3.
(2) Turn the ignition switch to ON.
(3) Select the following menu items using the SSM4. : [Each System] / [Engine Control System] / [Work Support] / [Active Test] / [ELCM switching valve]
(4) In [Active Test], check for the operating sound when the ELCM switching valve is started.
Criteria: Operating sound is heard.

OK → Go to Step 9.

NG → Go to Step 6.

6	Check wiring harness and connector (canister pump module - ECM)

(1) Turn the ignition switch to OFF.
(2) Disconnect the canister pump module connector.
(3) Disconnect the ECM connector.
(4) Measure the resistance between the terminals. (For terminal arrangement, refer to ES - 36.)

Resistance (open circuit check)

ES

Inspection terminals	Inspection conditions	Standard value
A35-1(VPMP) - G8-1	Always	Less than 1 Ω

Resistance (short circuit check)

Inspection terminals	Inspection conditions	Standard value
A35-1 (VPMP) or G8-1 - chassis ground	Always	10 k Ωor more

Result

Result	Possible faulty parts	Go to
OK	ECM	A
NG	Connector or wiring harness between the ECM and canister pump module	B

A → Go to Step 8.

B → Go to Step 7.

7	Repair or replacement of wiring harness or connector

Next → Go to Step 9.

8	Replacement of canister pump module

(1) Replace the canister pump module. (Refer to EC - 7)

9	Read DTC

(1) Connect the SSM4 to the DLC3.
(2) Turn the ignition switch to ON.
(3) Follow the SSM4 on-screen instructions to clear the DTCs. (Refer to ES - 28)
(4) Turn the ignition switch to OFF, and wait for 30 seconds.
(5) Perform test drive. (Refer to "Test drive" under "Description of functions")
(6) Follow the SSM4 on-screen instructions to check the DTC. (Refer to ES - 28)

Result

Result	Go to
DTCs related to EVAP are output	A
No DTC is output (Pending DTCs are not displayed)	B

B → Complete

A

10	Replacement of engine control computer

(1) Replace the engine control computer. (Refer to ES - 670)

Next

11	Read DTC

(1) Connect the SSM4 to the DLC3.
(2) Turn the ignition switch to ON.
(3) Follow the SSM4 on-screen instructions to clear the DTCs. (Refer to ES - 28)
(4) Turn the ignition switch to OFF, and wait for 30 seconds.
(5) Perform test drive. (Refer to "Test drive" under "Description of functions")
(6) Follow the SSM4 on-screen instructions to check the DTC. (Refer to ES - 28)

NOTE:
If there are no pending DTCs, repair has been successfully completed.

Next

Complete

DTC	P0458	Evaporative Emission System Purge Control Valve Circuit Low

DTC	P0459	Evaporative Emission System Purge Control Valve Circuit High

Circuit description

In order to suppress exhaust gas emissions, fuel evaporative gas from the fuel tank ASSY is sent through the charcoal canister ASSY to the intake air surge tank ASSY and combusted in the cylinder. As the engine control computer controls the opening and closing of the vacuum switching valve ASSY, this allows the flow rate of the canister purge to be varied according to driving conditions.

DTC No.	DTC detection conditions	Suspected parts
P0458	The purge VSV circuit voltage is at or below the threshold value for 2.5 seconds or more. (2 trips detection logic)	• The purge VSV circuit is open/shorted • Purge VSV • ECM
P0459	The purge VSV circuit current is at or above the threshold value for 2.5 seconds or more. (2 trips detection logic)	• The purge VSV circuit is open/shorted • Purge VSV • ECM

MONITOR DESCRIPTION

The ECM monitors the terminal voltage while the purge VSV is operating. Purge VSV duty control is possible by turning the ECM internal FET on and off. If the ECM drive signal and purge VSV terminal voltage do not match, the ECM detects a malfunction, illuminates the MIL, and records DTCs.

Monitor strategy

Related DTCs	P0458: Solenoid valve for purge control functional check P0459: Solenoid valve for purge control functional check
Required Sensors/Components (Main)	Purge VSV
Required Sensors/Components (Related)	-
Frequency of Operation	Continuous
Duration	2.5 seconds
MIL Operation	2 operation cycle
Sequence of Operation	None

ES

TYPICAL ENABLING CONDITIONS

P0458

Battery Voltage	10.9V or more
Purge VSV control duty cycle	Less than 75%

P0459

Battery Voltage	10.9V or more
Purge VSV control duty cycle	25% or more

TYPICAL MALFUNCTION THRESHOLDS

P0458

Purge VSV FET voltage	Battery voltage ×0.34 or less

P0459

Purge VSV FET current	12A or more

Circuit figure

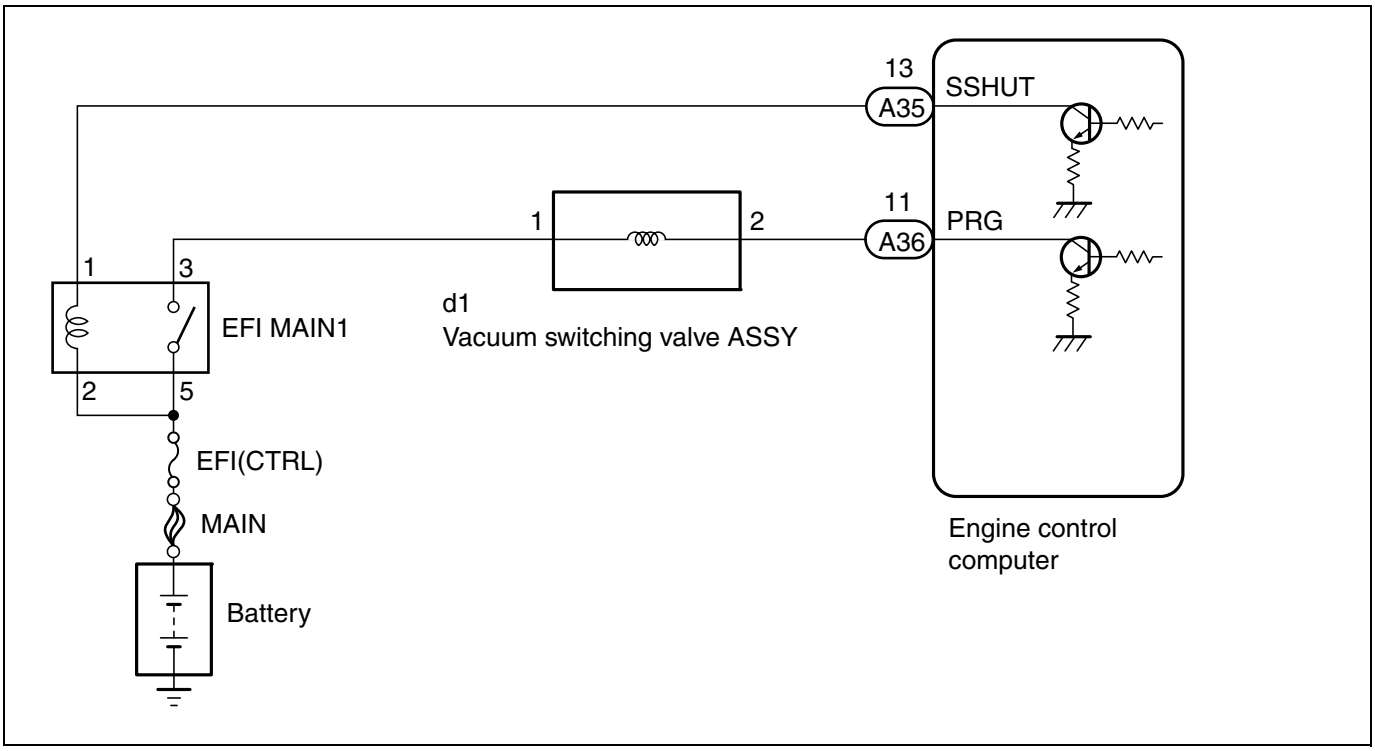

Description of functions

Test drive (P0458)

Perform test drive to check if the DTC recurs.

1. Connect the SSM4 to the DLC3.
2. Turn the ignition switch to ON.

3. Turn on the SSM4.
4. Follow the SSM4 on-screen instructions to clear the DTCs. (Refer to ES - 28)
5. Turn the ignition switch to OFF, and wait for 30 seconds.
6. Turn the ignition switch to ON.
7. Turn on the SSM4.
8. Start the engine.
   NOTE:
   If the engine cannot be started, crank the engine for 10 seconds or more.
9. Idle the engine for 20 seconds or more.
10. Follow the SSM4 on-screen instructions to check the DTC. (Refer to ES - 28)

Test drive (P0459)

Perform test drive to check if the DTC recurs.

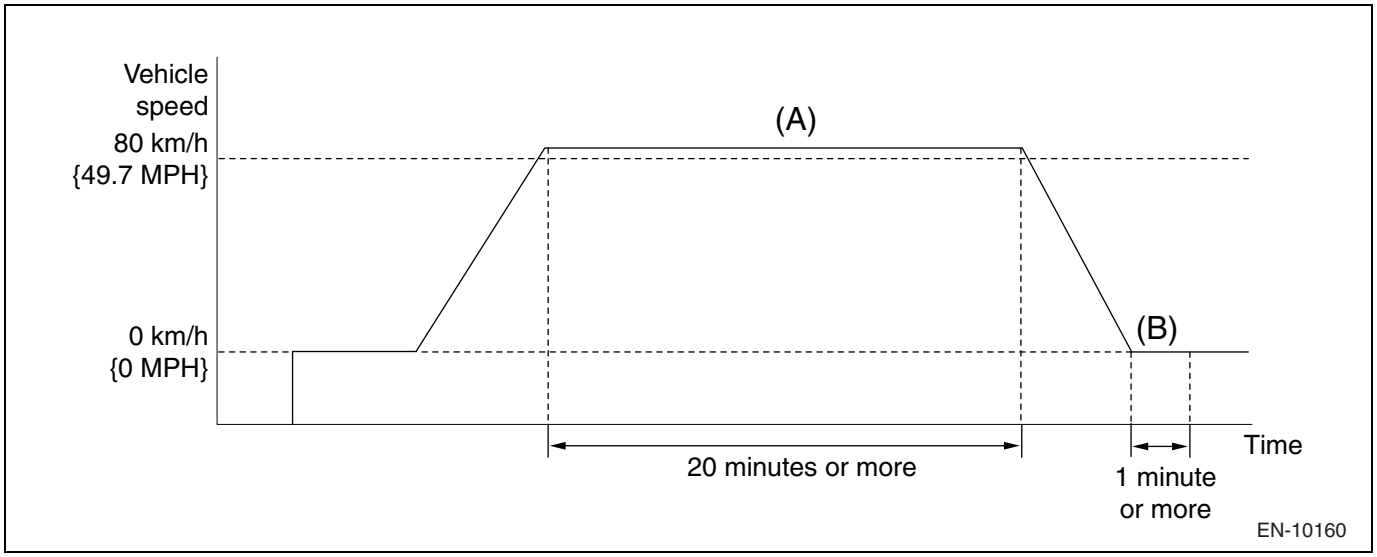

1. Connect the SSM4 to the DLC3.
2. Turn the ignition switch to ON.
3. Turn on the SSM4.
4. Follow the SSM4 on-screen instructions to clear the DTCs. (Refer to ES - 28)
5. Turn the ignition switch to OFF, and wait for 30 seconds.
6. Turn the ignition switch to ON.
7. Turn on the SSM4.
8. Start the engine and let it warm up until the engine coolant temperature stabilizes. (at 75°C {167°F} or more).
9. Perform driving test as follows.
   WARNING:
   When performing this driving test, always observe the applicable traffic laws such as the speed limit.
   (a) Drive at 80 km/h {49.7 MPH} or more for 20 minutes or more. (A)
   (b) Stop the vehicle.
   (c) Idle the engine for 1 minute or more. (B)
10. Follow the SSM4 on-screen instructions to check the DTC. (Refer to ES - 28)

Inspection steps

CAUTION:

Before performing troubleshooting, check the fuse for this circuit.

1	Performing of SSM4 [Active Test] ([Activate the VSV for Evap Control])

(1) Connect the SSM4 to the DLC3.
(2) Turn the ignition switch to ON.
(3) Turn on the SSM4.

(4) Select the following menu items using the SSM4. : [Each System] / [Engine Control System] / [Work Support] / [Active Test] / [Activate the VSV for Evap Control]
(5) Disconnect the 2 vacuum hoses of the vacuum switching valve ASSY.

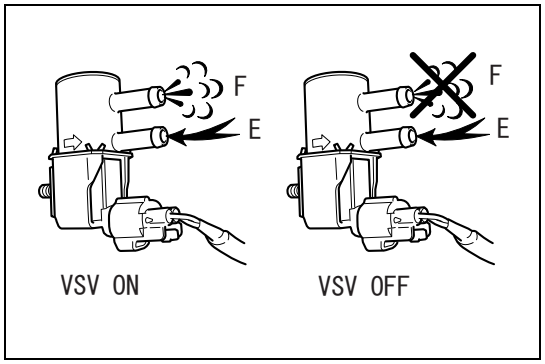

(6) Activate the vacuum switching valve ASSY and apply positive pressure on E port to check if air is coming to F port.
Criteria

[Active Test] ([Activate the VSV for Evap Control])	Criteria
ON	Air is coming from E port to F port
OFF	No air is coming from E port to F port

Result

Result	Go to
Malfunction	A
Normal	B

B → Go to Step 8.

A

2	Vacuum switching valve ASSY unit inspection

(1) Perform vacuum switching valve ASSY unit inspection. (Refer to EC - 18)

NG → Replacement of vacuum switching valve ASSY (Refer to EC - 16)

OK

3	Check wiring harness and connector (vacuum switching valve ASSY power supply voltage)

NOTE:
For the inspection procedure and precautions for wiring harnesses and connectors, refer to IN - 36.

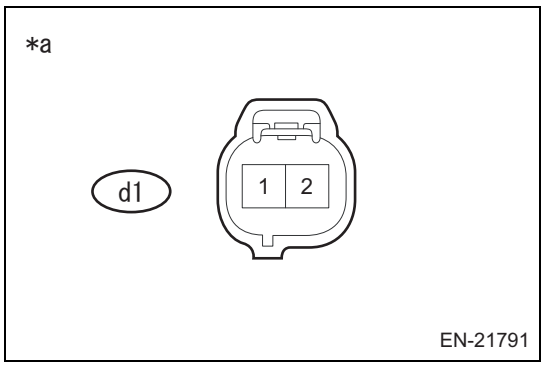

(1) Disconnect the vacuum switching valve ASSY connector.
(2) Measure the voltage between the terminals.
Voltage

Inspection terminals	Inspection conditions	Standard value
d1-1 - chassis ground	IG ON	11 to 14 V

Captions in illustration

*a	Front side of vehicle wiring harness connector (Vacuum switching valve ASSY connector)

NG → Go to Step 7.

OK

4	Check wiring harness and connector (engine control computer - vacuum switching valve ASSY)

NOTE:
For the inspection procedure and precautions for wiring harnesses and connectors, refer to IN - 36.

(1) Disconnect the connector for the engine control computer.
(2) Disconnect the vacuum switching valve ASSY connector.
(3) Measure the resistance between the terminals. (For terminal arrangement, refer to ES - 36.)

ES

Resistance (open circuit check)

Inspection terminals	Inspection conditions	Standard value
A36-11(PRG) - d1-2	Always	Less than 1 Ω

Resistance (short circuit check)

Inspection terminals	Inspection conditions	Standard value
A36-11 (PRG) and d1-2 - other terminals and chassis ground	Always	10 k Ωor more

NG → Repair or replacement of wiring harness or connector

OK

5	Clear DTC

(1) Connect the SSM4 to the DLC3.
(2) Turn the ignition switch to ON.
(3) Turn on the SSM4.
(4) Follow the SSM4 on-screen instructions to clear the DTCs. (Refer to ES - 28)
(5) Turn the ignition switch to OFF, and wait for 30 seconds.

Next

6	Perform test drive for operation check

(1) Perform test drive. (Refer to "Test drive" under "Description of functions")
WARNING:
When performing this driving test, always observe the applicable traffic laws such as the speed limit.
(2) Follow the SSM4 on-screen instructions to check the DTC.

Result

Result	Go to
No DTC is output.	A
P0458 or P0459 is output.	B

B → Replacement of the engine control computer (Refer to ES - 670)

A

Inspection for problems that do not normally occur (Refer to ES - 28)

7	Relay unit inspection (EFI MAIN1 relay)

(1) Perform unit inspection of EFI MAIN1 relay. (Refer to ES - 713)

NG → Relay replacement (EFI MAIN1 relay)

OK

ES

8	Check wiring harness and connector (Vacuum switching valve ASSY - EFI relay)

NOTE:
For the inspection procedure and precautions for wiring harnesses and connectors, refer to IN - 36.

(1) Disconnect the vacuum switching valve ASSY connector.
(2) Remove the EFI MAIN1 relay from the engine compartment relay block.
(3) Measure the resistance between the terminals.

Resistance (open circuit check)

Inspection terminals	Inspection conditions	Standard value
3 (EFI MAIN1 relay holder) - d1-1	Always	Less than 1 Ω

Resistance (short circuit check)

Inspection terminals	Inspection conditions	Standard value
3 (EFI MAIN1 relay holder) or d1-1 - other terminals and chassis ground	Always	10 k Ωor more

CAUTION:
When using tester probes to take measurements at a holder, do not push them hard against the holder. Otherwise the holder could be damaged.

NG → Repair or replacement of wiring harness or connector

OK

Inspection of the ECM power supply system (Refer to ES - 642)

DTC P2158 Vehicle Speed Sensor "A"

Circuit description
Skid control computer converts the vehicle speed pulse signal which is output from the ABS speed sensors on each wheel into vehicle speed signal. This signal is input to the engine control computer via CAN communication. The engine control computer determines vehicle speed based on this CAN communication data.

DTC No.	DTC detection conditions	Suspected parts
P2158	Vehicle speed signal from drive wheels is 300 km/h {186.42 MPH} or more for 2.5 seconds or more. (1 trips detection logic)	• Open/short circuit in wheel speed signal circuit • Brake actuator ASSY • ECM

MONITOR DESCRIPTION
If the vehicle speed signal sent from the skid control ECM exceeds 300 km/h {186.42 MPH}, the ECM judges it as a failure in the vehicle speed signal circuit, turns on the MIL, and records the DTC.

Monitor strategy

Related DTCs	P2158: Vehicle speed sensor (VSS) range check
Required Sensors/Components (Main)	Speed sensor (VSS) Combination meter Skid control ECM
Required Sensors/Components (Related)	-
Frequency of Operation	Continuous
Duration	2.5 seconds
MIL Operation	Immediately after
Sequence of Operation	None

ES

TYPICAL ENABLING CONDITIONS

Overlap prohibited DTC	U0073, U0122, U0416 (CAN system)
Battery Voltage	10.9V or more

TYPICAL MALFUNCTION THRESHOLDS

Vehicle speed (rear wheels)	300km/h {186.42 MPH} or more

Circuit figure

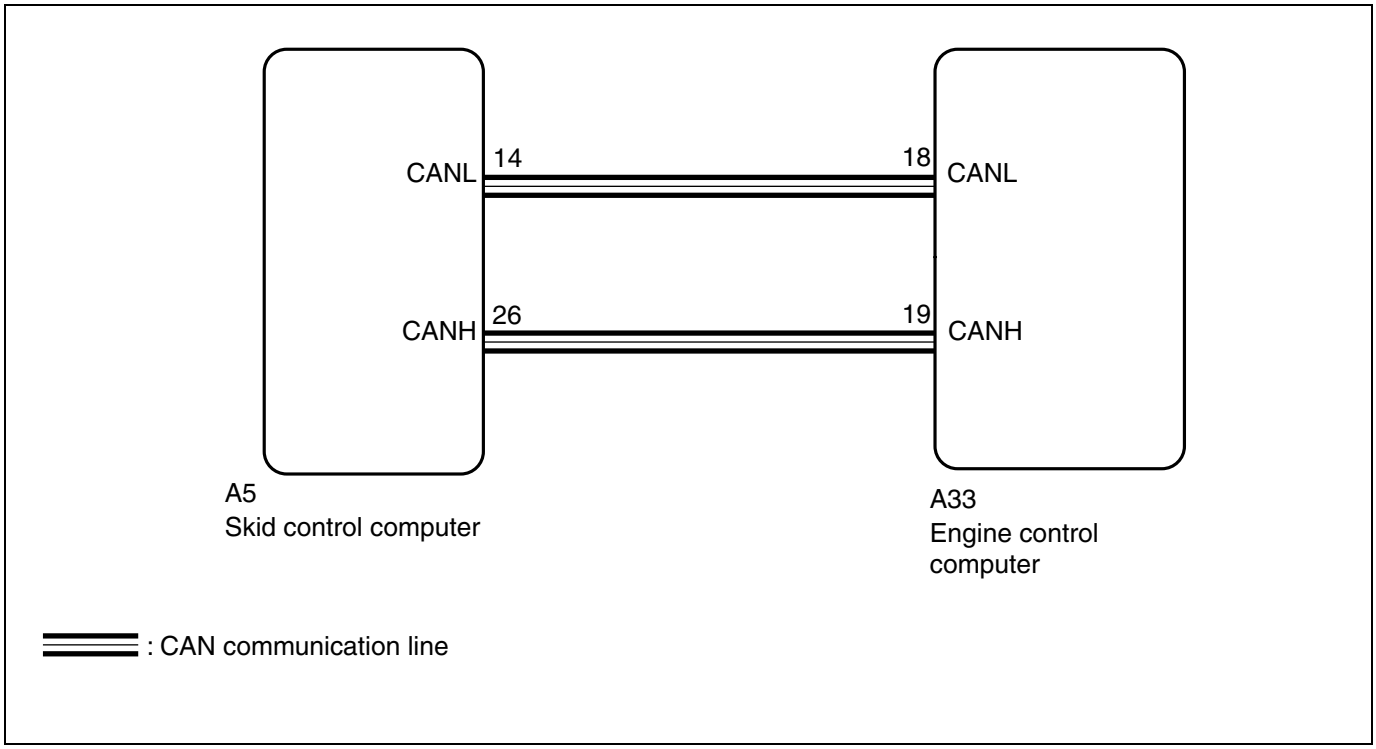

Description of functions

Test drive

Perform test drive to check if the DTC recurs.

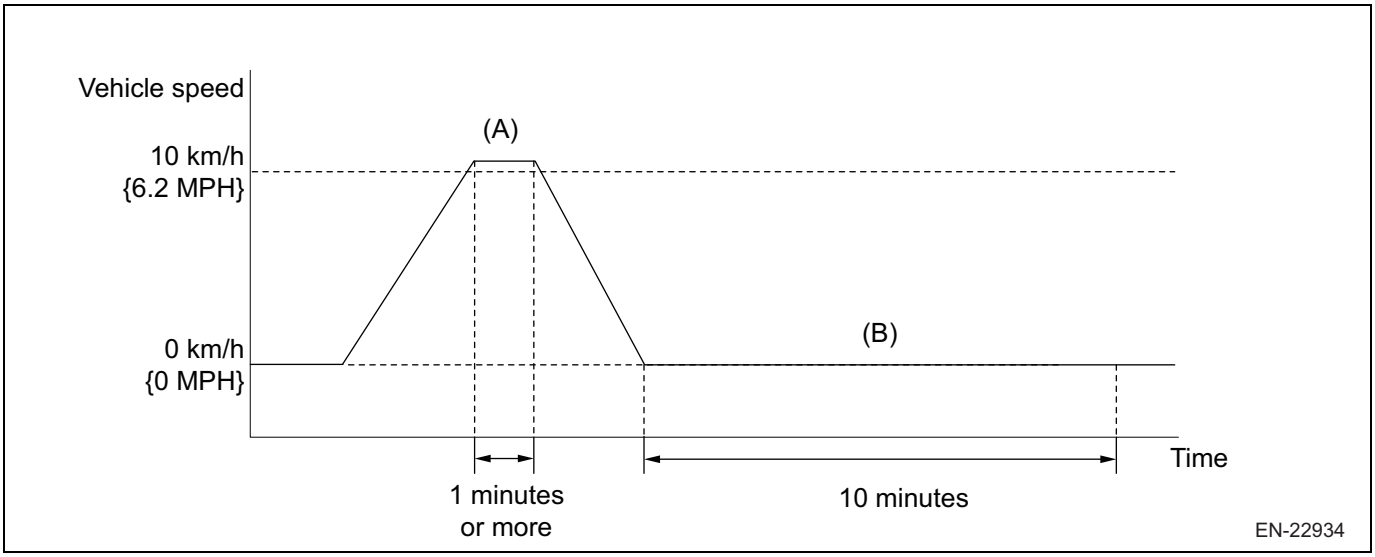

1. Connect the SSM4 to the DLC3.
2. Turn the ignition switch to ON.
3. Turn on the SSM4.
4. Follow the SSM4 on-screen instructions to clear the DTCs. (Refer to ES - 28)
5. Turn the ignition switch to OFF, and wait for 30 seconds.
6. Turn the ignition switch to ON.
7. Turn on the SSM4.
8. Start the engine.
9. Perform driving test as follows.
   WARNING:
   When performing this driving test, always observe the applicable traffic laws such as the speed limit.
   (a) Drive at 10 km/h {6.2 MPH} or more for 1 minute or more. (A)
   (b) Stop the vehicle.
   (c) Idle the engine for 10 minutes or more. (B)
10. Follow the SSM4 on-screen instructions to check the DTC. (Refer to ES - 28)

Inspection steps
NOTE:
Read the freeze frame data using the SSM4. A part of the engine running conditions under which the engine trouble occurred is recorded in the freeze frame data, which is useful for troubleshooting.

1	Reading of SSM4 data (vehicle speed)

NOTE:
Make sure that the speed meter operates normally.
(1) Connect the SSM4 to the DLC3.
(2) Turn the ignition switch to ON.
(3) Turn on the SSM4.
(4) Select the following menu items using the SSM4. : [Each System] / [Engine Control System] / [Data monitor] / [Vehicle Speed]
(5) Perform test drive. (Refer to "Test drive" under "Description of functions")
   WARNING:
   When performing this driving test, always observe the applicable traffic laws such as the speed limit.
(6) Read the [Vehicle Speed] displayed on the SSM4.
   Standard value: The vehicle speed shown in the data monitor and the actual vehicle speed are the same

NG → Go to Step 2.

OK

Inspection for problems that do not normally occur (Refer to ES - 28)

2	Read DTC (VSC system)

(1) Connect the SSM4 to the DLC3.
(2) Turn the ignition switch to ON.
(3) Turn on the SSM4.
(4) Follow the SSM4 on-screen instructions to check the DTC of the VSC system. (Refer to BC - 13)

Result

Result	Go to
No DTC is output.	A
DTC is output.	B

B → To corresponding DTC chart (refer to BC - 6)

A

3	Clear DTC

(1) Connect the SSM4 to the DLC3.
(2) Turn the ignition switch to ON.
(3) Turn on the SSM4.
(4) Follow the SSM4 on-screen instructions to clear the DTCs. (Refer to ES - 28)

Next

4	Perform test drive for operation check

(1) Perform test drive. (Refer to "Test drive" under "Description of functions")
WARNING:
When performing this driving test, always observe the applicable traffic laws such as the speed limit.
(2) Follow the SSM4 on-screen instructions to check the DTCs. (Refer to ES - 28)

Result

Result	Go to
P2158 is not output.	A
P2158 is output.	B

B → Replacement of the engine control computer (Refer to ES - 670)

A

Inspection for problems that do not normally occur (Refer to ES - 28)

DTC	P0506	ISC valve characteristic {1} Low

ES

DTC	P0507	ISC valve characteristic {1} High

Circuit description

Idle speed is controlled by the ETCS (Electronic Throttle Control System). The ETCS consists of 1) one-valve-type throttle body, 2) throttle actuator that operates the throttle valve, 3) throttle position sensor that detects the throttle valve opening angle, 4) accelerator pedal sensor that detects the position of the accelerator pedal, and 5) ECM that controls the ETCS. Based on the target idle speed, the ECM controls the throttle actuator so that the throttle valve opening angle is maintained properly.

DTC No.	DTC detection conditions	Suspected parts
P0506	Engine speed deviates from the target engine speed for 30 seconds or more (actual engine speed - target engine speed <= -100 r/min) (2 trips detection logic)	• Electronic throttle control system • Intake system • PCV hose connection • ECM
P0507	Engine speed deviates from the target engine speed for 30 seconds or more (actual engine speed - target engine speed >= 200 r/min) (2 trips detection logic)	

MONITOR DESCRIPTION

The ECM performs idle speed control (ISC) by monitoring the idle speed and airflow at idle. When the difference between the target engine idle speed and actual engine idle speed exceeds the threshold value for 30 seconds or more, the ECM judges it as an ISC system failure.

Monitor strategy

Related DTCs	P0506: Idle speed control (ISC) functional check P0507: Idle speed control (ISC) functional check
Required Sensors/Components (Main)	Electronic throttle control system
Required Sensors/Components (Related)	Crankshaft position sensor E.F.I. water temperature sensor Vehicle speed sensor
Frequency of Operation	Continuous
Duration	15 seconds
MIL Operation	2 operation cycle
Sequence of Operation	None

TYPICAL ENABLING CONDITIONS

Overlap prohibited DTC	P0030, P0031, P0032 (air/fuel ratio sensor - heater) P0068, P0107, P0108 (Vacuum (MAP) sensor) P0117, P0118, P0125 (Engine Coolant Temperature (ECT) sensor) P0122, P0123, P0222, P0223 (Throttle position sensor) P0131, P0132 (air/fuel ratio sensor - ECM input voltage) P0134, P2195, P2196 (Air/fuel ratio sensor - Output voltage) P0300, P0301, P0302, P0303, P0304 (misfire) P0500 (Vehicle Speed Sensor (VSS)) P0604, P0605 (ECM ROM) P0851, P0852 (neutral position switch) P1160 (throttle return spring) P2101, P2102 (Throttle actuator control motor) P2109 (Throttle position sensor minimum stop) P2119 (Throttle actuator control) P2122, P2123, P2127, P2128 (Accelerator Pedal Position Sensor (APPS) circuit) P2135 (Throttle position sensor (TPS) degree of correlation) P2138 (Accelerator pedal position sensor (APPS) degree of correlation)
Atmospheric pressure	75.06 kPa {563 mmHg} or more
Battery Voltage	10.9V or more
Engine coolant temperature	60°C {140°F} or more
Elapsed time after starting the engine	10 seconds or more
λ	0.85 to 1.151
Vehicle speed	0 km/h {0 MPH}
Elapsed time after turning the neutral switch OFF ←→ON	More than 5 seconds
Accelerator pedal position	0%
Cold start diagnosis	Not Operated
F/B operation condition	Closed loop
Idle speed control feed back	In operation

TYPICAL MALFUNCTION THRESHOLDS

P0506

Actual engine speed - target engine speed	Less than -100 r/min

P0507

Actual engine speed - target engine speed	More than 200 r/min

Description of functions

Test drive

Perform test drive to check if the DTC recurs.

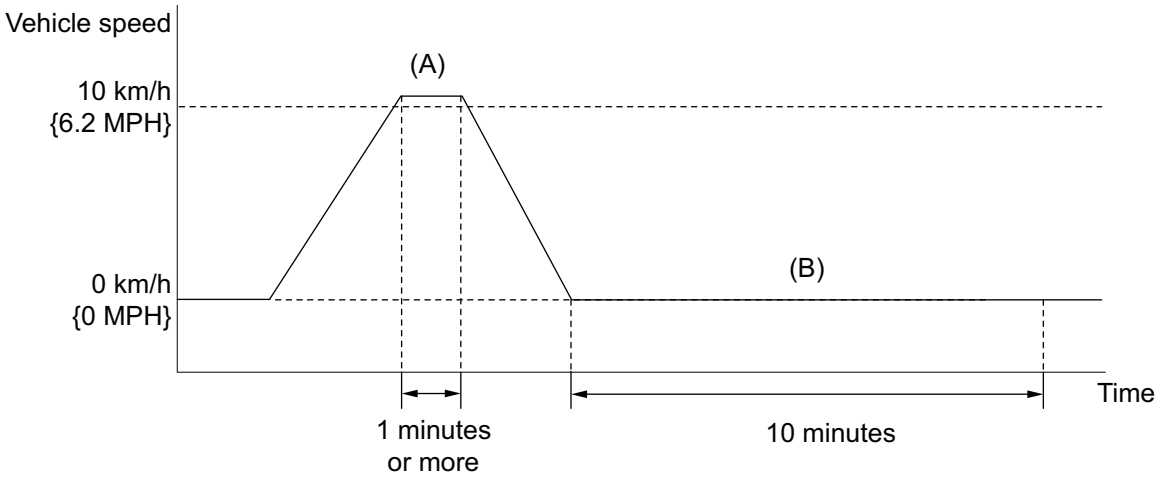

1. Connect the SSM4 to the DLC3.
2. Turn the ignition switch to ON.
3. Turn on the SSM4.
4. Follow the SSM4 on-screen instructions to clear the DTCs. (Refer to ES - 28)
5. Turn the ignition switch to OFF, and wait for 30 seconds.
6. Turn the ignition switch to ON.
7. Turn on the SSM4.
8. Start the engine.
9. Perform driving test as follows.
   WARNING:
   When performing this driving test, always observe the applicable traffic laws such as the speed limit.
   (a) Drive at 10 km/h {6.2 MPH} or more for 1 minute or more. (A)
   (b) Stop the vehicle.
   (c) Idle the engine for 10 minutes or more. (B)
10. Follow the SSM4 on-screen instructions to check the DTC. (Refer to ES - 28)

Inspection steps

NOTE:

- Read the freeze frame data using the SSM4. A part of the engine running conditions under which the engine trouble occurred is recorded in the freeze frame data, which is useful for troubleshooting.
- The following conditions may cause DTC P0506 or P0507 to be recorded.
  (a) A small section of the floor carpet overlaps with and depresses the accelerator pedal, causing the throttle valve to open a little bit.
  (b) The accelerator pedal is not fully released.

1	Read DTC

(1) Connect the SSM4 to the DLC3.
(2) Turn the ignition switch to ON.
(3) Turn on the SSM4.
(4) Follow the SSM4 on-screen instructions to check the DTC. (Refer to ES - 28)

Result

Result	Go to
P0506 or P0507 is displayed.	A
P0506 or P0507 and other DTCs are displayed.	B

NOTE:
If any DTCs other than P0505 are present, troubleshoot the DTCs first.

B → To corresponding DTC chart (refer to ES - 12)

A

2	PCV hose connection check

(1) Check the PCV hose for poor connections and damage.
Criteria: The PCV valve and hose are connected properly and not damaged.

NG → Repair or replacement of the PCV hose

OK

3	Intake system inspection

(1) Inspect the intake system. (Refer to IE - 4)
Criteria: There is no leakage in the intake system.

NG → Repair or replacement of intake system

OK

4	Throttle body check (throttle valve)

(1) Check the condition of the throttle body.
Criteria: There is no foreign matter adhered to the throttle valve, and the valve operates smoothly.

NG → Throttle body replacement

OK

5	DTC recheck

(1) Connect the SSM4 to the DLC3.
(2) Turn the ignition switch to ON.
(3) Turn on the SSM4.
(4) According to the driving pattern described in test drive, drive the vehicle.
(5) Check the content of the DTC.

Result

Result	Go to
P0506 or P0507 is displayed.	A
No DTC is displayed	B

B → Complete

A

Replacement of the engine control computer (Refer to ES - 670)

DTC	P050A	Cold Start Idle Air Control System Performance

DTC	P050B	Cold start ignition timing abnormal

Circuit description

The Cold Start Emission Reduction Strategy (CSERS), which shortens the time necessary for the catalyst to warm up after cold start, is used in this vehicle. The CSERS consists of related ignition timing and increased engine idle speed in calibrated time. This monitor detects estimated exhaust gas temperature which has not reached the target value, ignition timing from the ECM, and engine idle speed failure.

ES

DTC No.	DTC detection conditions	Suspected parts
P050A	From the cold engine condition, the engine speed not reach the target engine speed within 7 seconds. (2 trips detection logic)	• Throttle body • Intake air flow meter SUB-ASSY • PCV system • Air cleaner filter element • Intake system • VVT system • Wiring harness or connector • ECM
P050B	Despite abrupt warming control of the catalyst, ignition timing is not retarded for 7 seconds (to delay ignition timing). (2 trips detection logic)	

Monitor strategy

Related DTCs	P050A: Cold start emission reduction strategy functional check P050B: Cold start emission reduction strategy functional check
Required Sensors/Components (Main)	Throttle body
Required Sensors/Components (Related)	Intake air flow meter SUB-ASSY Vacuum sensor E.F.I. water temperature sensor
Frequency of Operation	Once per driving cycle
Duration	7 seconds
MIL Operation	2 operation cycle
Sequence of Operation	None

TYPICAL ENABLING CONDITIONS

All

Overlap prohibited DTC	None
Atmospheric pressure	75.06 kPa (abs) {0.8 kgf/cm^2, 10.9 psi (abs)} or more
Battery Voltage	10.9V or more
Vehicle speed	2 km/h {1.2 MPH} or less
Engine coolant temperature	80°C {176°F} or less
Throttle opening angle	Less than 0.296%
Elapsed time after changing the gear position from N ←→D	3 seconds or more

P050A

Total air induction	Less than 850 g {29.98 oz} (varies depending on the engine coolant temperature when the engine is started)
Elapsed time after starting the engine	2 seconds or more

P050B

Total air induction	Less than 850 g {29.98 oz} (varies depending on the engine coolant temperature when the engine is started)

Ignition timing commanded by CSERS	N range: 5.5°CA or less (varies depending on the engine coolant temperature when the engine is started) D range: -0.5°CA or less

TYPICAL MALFUNCTION THRESHOLDS

P050A

Actual engine speed - target engine speed	Less than -300 r/min

P050B

Final ignition timing ordered - ignition timing during CSERS	Greater than 10.5°CA

ES

Circuit figure

For circuit figure, refer to ES - 610.

Description of functions

Test drive

Perform test drive to check if the DTC recurs.

1. Connect the SSM4 to the DLC3.
2. Turn the ignition switch to ON.
3. Turn on the SSM4.
4. Follow the SSM4 on-screen instructions to clear the DTCs. (Refer to ES - 28)
5. Turn the ignition switch to OFF, and wait for 30 seconds.
6. Turn the ignition switch to ON.
7. Turn on the SSM4.
8. Select the following menu items using the SSM4. : [Each System] / [Engine Control System] / [Data monitor] / [Coolant Temp./ Intake Air Temp.]
9. Confirm that the engine coolant temperature and intake air temperature meet the condition described below.
   Condition: |Engine coolant temperature - intake air temperature| is 5°C {9°F} or less
   NOTE:
   If the condition is not met, turn the ignition switch to OFF, and wait until the condition is met.
10. If the condition is met, start the engine, and let it idle for 2 minutes or more.
    NOTE:
    Do not move the select lever from "P" or "N" range while the engine is idling.
11. Follow the SSM4 on-screen instructions to check the DTC. (Refer to ES - 28)

Inspection steps

NOTE:

Read the freeze frame data using the SSM4. A part of the engine running conditions under which the engine trouble occurred is recorded in the freeze frame data, which is useful for troubleshooting.

CAUTION:

Check fuses of the circuits related to this system before performing the following inspection steps.

1	Read DTC

(1) Connect the SSM4 to the DLC3.
(2) Turn the ignition switch to ON.
(3) Turn on the SSM4.
(4) Follow the SSM4 on-screen instructions to check the DTC. (Refer to ES - 28)

Result

Result	Go to
P050A or P050B is displayed.	A
P050A or P050B and other DTCs are displayed.	B

NOTE:
If any DTCs other than P050A or P050B are present, troubleshoot the DTCs first.

B → To corresponding DTC chart (refer to ES - 12)

A

2	Reading by the SSM4 ([Long term fuel trim B1] and [Short term fuel trim B1])

ES

NOTE:
Calculate the total fuel correction amount, and check the characteristic deviations of the intake air flow meter SUB-ASSY.

(1) Connect the SSM4 to the DLC3.
(2) Start the engine.
(3) Turn on the SSM4.
(4) Select the following menu items using the SSM4. : [Each System] / [Engine Control System] / [Data monitor] / [Long term fuel trim B1] and [Short term fuel trim B1]
(5) Read the value displayed on the SSM4 on idle.
(6) Add the values of [Long term fuel trim B1] and [Short term fuel trim B1] to calculate the total fuel correction amount.
Criteria: Sum of [Long term fuel trim B1] and [Short term fuel trim B1] are between -20 % and 20 %.

NG → Go to Step 5.

OK

3	Throttle body check (throttle valve)

(1) Check that no deposit is adhered around the throttle valve, and check the condition of the throttle valve.
Criteria: There is no deposit adhered around the throttle valve, and the valve operates smoothly.

OK → Go to Step 14.

NG → Go to Step 4.

4	Repair or replacement of throttle body

(1) Repair or replace the throttle body. (Refer to ES - 666)

Next → Go to Step 14.

5	Inspection of the PCV hose

(1) Check the PCV hose for poor connections and damage.
Criteria: The PCV valve and hose are connected properly and not damaged.

NG → Go to Step 10.

OK

6	Intake system inspection

(1) Inspect the intake system. (Refer to IE - 4)
Criteria: There is no leakage in the intake system.

NG → Go to Step 11.

OK

7	Air cleaner filter element SUB-ASSY check

(1) Visually check the air cleaner filter element for heavy contamination with mud and oil.
Criteria: The air cleaner filter element is not heavily contaminated with mud and oil.

NG → Go to Step 12.

OK

8	Performing of [Active Test] using the SSM4 ([Camshaft timing oil control valve ASSY operation])

(1) Operate the VVT system in [Active Test] and check that the VVT system operates without problem.
(a) By referring to the inspection steps of DTC P0011 (VVT system of the intake camshaft), perform [Active Test]. (Refer to ES - 28)
(b) By referring to the inspection steps of DTC P0014 (VVT system of the exhaust camshaft), perform [Active Test]. (Refer to ES - 28)

NG → Go to Step 13.

OK

9	Reading by the SSM4 ((mass air flow) refer to ES - 247)

OK → Go to Step 14.

NG → Go to Step 15.

10	Repair or replacement of the PCV hose

(1) Repair or replace the PCV valve and hose.

Next → Go to Step 14.

11	Repair or replacement of intake system

(1) Repair or replace the intake system.

Next → Go to Step 14.

12	Replacement of air cleaner filter element SUB-ASSY

(1) Replace the air cleaner filter element SUB-ASSY.

Next → Go to Step 14.

13	VVT system check and repair

ES

(1) Check and repair the VVT system.

NOTE:

- Refer to the inspection steps of DTC P0011 (VVT system of the intake camshaft). (Refer to ES - 28)
- Refer to the inspection steps of DTC P0041 (VVT system of the exhaust camshaft). (Refer to ES - 28)

NG → Go to Step 13.

OK

14	DTC recheck (DTC P050A or P050B)

CAUTION:

In order to perform this operation, the engine must be cold (at a temperature equivalent to the engine coolant temperature recorded in the freeze frame data).

(1) Connect the SSM4 to the DLC3.
(2) Turn the ignition switch to ON.
(3) Turn on the SSM4.
(4) Clear the DTC. (Refer to ES-38)
(5) Turn the ignition switch to OFF, and wait for at least 30 seconds.
(6) According to the driving pattern described in test drive, drive the vehicle.
(7) Follow the SSM4 on-screen instructions to check the DTC. (Refer to ES - 28)

Result

Result	Go to
A DTC is not displayed.	A
P050A or P050B is displayed.	B

B → Go to Step 15.

A

Inspection for problems that do not normally occur (Refer to ES - 28)

15	Check wiring harness and connector (connection of intake air flow meter SUB-ASSY connector)

(1) Check the connection and terminal contact pressure of the connector and wiring harness between the intake air flow meter SUB-ASSY and the ECM. (Refer to IN - 36)

NOTE:

If abnormal, repair them.

Next

16	Read DTC

CAUTION:
In order to perform this operation, the engine must be cold (at a temperature equivalent to the engine coolant temperature recorded in the freeze frame data).
(1) Connect the SSM4 to the DLC3.
(2) Turn the ignition switch to ON.
(3) Turn on the SSM4.
(4) Clear the DTC. (Refer to ES - 28)
(5) Turn the ignition switch to OFF, and wait for at least 30 seconds.
(6) According to the driving pattern described in test drive, drive the vehicle.
(7) Follow the SSM4 on-screen instructions to check the DTC. (Refer to ES - 28)

Result

Result	Go to
P050A or P050B is displayed.	A
A DTC is not displayed.	B

B → Complete

A

17	Inspection of wiring harness and connector (intake air flow meter SUB-ASSY - ECM) (Refer to ES - 170)

B → Repair or replacement of wiring harness or connector

A

18	Intake air flow meter SUB-ASSY replacement

(1) Replace the intake air flow meter SUB-ASSY. (Refer to ES - 675)
NOTE:
If the result of check in Step 9 is normal, go to the next step without replacing the intake air flow meter SUB-ASSY.

Next

19	Confirmation of troubleshooting completion

CAUTION:
In order to perform this operation, the engine must be cold (at a temperature equivalent to the engine coolant temperature recorded in the freeze frame data).
(1) Connect the SSM4 to the DLC3.
(2) Turn the ignition switch to ON.
(3) Turn on the SSM4.
(4) Clear the DTC. (Refer to ES - 28)
(5) Turn the ignition switch to OFF, and wait for at least 30 seconds.

(6) According to the driving pattern described in test drive, drive the vehicle.
(7) Follow the SSM4 on-screen instructions to check the DTC. (Refer to ES - 28)

Result

Result	Go to
A DTC is not displayed.	A
P050A or P050B is displayed.	B

ES

B → Replacement of the engine control computer (Refer to ES - 670)

A

Complete

DTC	P0512	Starter Switch Circuit High input

DTC	P0616	Starter Relay Circuit Low

DTC	P0617	Starter Relay Circuit High

DTC	P081A	Starter cut relay system circuit (Low)

Circuit description

While the engine is being cranked, the starter operation signal is also transmitted to the STSW terminal (for models without smart entry & start system) or STSW2 terminal (for models with smart entry & start system) of the engine control computer. The starter operating signal is primarily used for engine control during startup.

For models with smart entry & start system, when the engine control computer detects engine startup condition during engine cranking, the engine control computer drives the ST CUT relay and stops starter operation.

DTC No.	DTC detection conditions	Suspected parts
P0512	The starter signal continues to be input for 30 seconds or more after engine start. (1 trips detection logic)	• Starter system • ST relay circuit • ECM
P0616	No starter signal is input after engine start. (1 trips detection logic)	• Starter system • ST relay circuit • ECM
P0617	The starter signal continues to be input after engine start. (1 trips detection logic)	• Starter system • ST relay circuit • ECM
P081A	Short circuit is detected in the ST cut relay circuit. (1 trips detection logic)	• Starter system • ST cut relay circuit • ECM

Monitor strategy

Related DTCs	P0512: Starter switch circuit with push start system functional check P0616: Starter switch circuit with push start system functional check P0617: Starter switch circuit with push start system functional check P0616: Starter switch circuit without push start system functional check P0617: Starter switch circuit without push start system functional check P081A: Starter disable relay with push start system functional check
Required Sensors/Components (Main)	ST relay Neutral start switch Ignition switch
Required Sensors/Components (Related)	Vehicle speed sensor Crankshaft position sensor
Frequency of Operation	Continuous: P0512, P0617 Once per driving cycle: P0616, P081A
Duration	30 seconds: P0512, P0617 Immediately after: P0616, P081A
MIL Operation	Immediately after
Sequence of Operation	None

TYPICAL ENABLING CONDITIONS

P0512

Overlap prohibited DTC	P0500 (Vehicle speed sensor)
Battery Voltage	8V or more
Engine Speed	500 RPM or more

P0616

Overlap prohibited DTC	P0500 (Vehicle Speed Sensor (VSS)): Without push start system None: With push start system
Battery Voltage	8V or more
Engine Speed	Increased from 0 r/min to 500 r/min or more
Vehicle speed	Less than 1km/h {0.6 MPH}
ST relay	ON

P0617

Overlap prohibited DTC	None
Battery Voltage	8V or more
Engine Speed	500 RPM or more
ST relay	OFF

P081A

Overlap prohibited DTC	None
Battery Voltage	8V or more
Vehicle speed	Less than 1km/h {0.6 MPH}
Engine Speed	Increased from 0 r/min to 500 r/min or more
ST relay	OFF

TYPICAL MALFUNCTION THRESHOLDS

P0512

Starter signal 1	ON

P0616 (with push start system)

Starter signal 2	OFF

P0617 (with push start system)

Starter signal 2	ON

P0616 (without push start system)

Starter signal 1	OFF

P0617 (without push start system)

Starter signal 1	ON

P081A

Starter relay invalid control voltage	Battery voltage ×0.34 V

Circuit figure

For circuit figure, refer to the starter system (models with smart entry & start system) ES - 610.

For circuit figure, refer to the starter system (models without smart entry & start system) ES - 621.

Description of functions

Test drive

Perform test drive to check if the DTC recurs.

1. Connect the SSM4 to the DLC3.
2. Turn the ignition switch to ON.
3. Turn on the SSM4.
4. Follow the SSM4 on-screen instructions to clear the DTCs. (Refer to ES - 28)
5. Turn the ignition switch to OFF, and wait for 30 seconds.
6. Turn the ignition switch to ON.
7. Turn on the SSM4.
8. Start the engine.
   NOTE:
   If the engine cannot be started, crank the engine for 10 seconds or more.
9. Idle the engine for 20 seconds or more.
10. Follow the SSM4 on-screen instructions to check the DTC.

Inspection steps

CAUTION:

Before performing troubleshooting, check the fuse for this circuit.

NOTE:

Read the freeze frame data using the SSM4. A part of the engine running conditions under which the engine trouble occurred is recorded in the freeze frame data, which is useful for troubleshooting.

1	Reading of SSM4 data ([Starter Switch])

(1) Connect the SSM4 to the DLC3.
(2) Turn the ignition switch to ON.
(3) Turn on the SSM4.
(4) Select the following menu items using the SSM4. : [Each System] / [Engine Control System] / [Data monitor] / [Starter Switch]
(5) Read [starter switch].

Voltage

Item name	Inspection conditions	Standard value
[Starter Switch]	IG ON	OFF
	When cranking	ON

Result

Result	Go to
Abnormal (models without smart entry & start system)	A
Abnormal (models with smart entry & start system)	B
Normal	C

ES

B → Go to Step 4.

C → Go to Step 9.

A

2 Relay unit inspection (ST relay)

(1) Perform ST relay unit inspection. (Refer to ST - 49)

NG → Relay replacement (ST relay)

OK

3 Check wiring harness and connector (ST relay - engine control computer)

NOTE:
Refer to IN - 36for inspection procedure and precautions of wiring harness and connector.

(1) Disconnect the connector for the engine control computer.
(2) Remove the ST relay from the engine compartment relay block.
(3) Measure the resistance between the terminals. (For terminal arrangement, refer to ES - 36.)

Resistance (open circuit check)

Inspection terminals	Inspection conditions	Standard value
3 (ST relay holder) - A33-17 (STSW2)	Always	Less than 1 Ω
1 (ST relay holder) - A35-26 (STA)	Always	Less than 1 Ω

Resistance (short circuit check)

Inspection terminals	Inspection conditions	Standard value
3 (ST relay holder) and A33-17 (STSW2) - other terminals and chassis ground	Always	10 k Ωor more
1 (ST relay holder) and A35-26 (STA) - other terminals and chassis ground	Always	10 k Ωor more

CAUTION:
- When using tester probes to take measurements at a relay holder, do not push them hard against the holder. Otherwise the holder could be damaged.

NG → Repair or replacement of wiring harness or connector

OK

Starter system check (models without smart entry & start system) (Refer to ES - 620)

4	Reading of SSM4 data ([Starter cut relay])

(1) Connect the SSM4 to the DLC3.
(2) Turn the ignition switch to ON.
(3) Turn on the SSM4.
(4) Select the following menu items using the SSM4. : [Each System] / [Engine Control System] / [Data monitor] / [Starter cut relay]
(5) Read [Starter cut relay].

Voltage

Item name	Inspection conditions	Standard value
[Starter cut relay]	IG ON	OFF
	When cranking	ON

NG → Go to Step 7.

OK

5	Relay unit inspection (ST relay)

(1) Perform ST relay unit inspection. (Refer to ST - 49)

NG → Relay replacement (ST relay)

OK

6	Check wiring harness and connector (ST relay - engine control computer)

NOTE:
Refer to IN - 36for inspection procedure and precautions of wiring harness and connector.
(1) Disconnect the connector for the engine control computer.
(2) Remove the ST relay from the engine compartment relay block.
(3) Measure the resistance between the terminals. (For terminal arrangement, refer to ES - 36.)

Resistance (open circuit check)

Inspection terminals	Inspection conditions	Standard value
3 (ST relay holder) - A33-14 (STSW2)	Always	Less than 1 Ω
1 (ST relay holder) - A35-26 (STA)	Always	Less than 1 Ω

Resistance (short circuit check)

Inspection terminals	Inspection conditions	Standard value
3 (ST relay holder) and A33-14 (STSW2) - other terminals and chassis ground	Always	10 k Ωor more
1 (ST relay holder) and A35-26 (STA) - other terminals and chassis ground	Always	10 k Ωor more

CAUTION:
When using tester probes to take measurements at a relay holder, do not push them hard against the holder. Otherwise the holder could be damaged.

NG → Repair or replacement of wiring harness or connector

OK

Starter system check (models with smart entry & start system) (Refer to ES - 610)

ES

7	Relay unit inspection (ST CUT relay)

(1) Perform ST CUT relay unit inspection. (Refer to ST - 49)

NG → Relay replacement (ST CUT relay)

OK

8	Check wiring harness and connector (ST CUT relay - engine control computer)

NOTE:
Refer to IN - 36for inspection procedure and precautions of wiring harness and connector.

(1) Disconnect the connector for the engine control computer.
(2) Remove the ST CUT relay from the engine compartment relay block.
(3) Measure the resistance between the terminals. (For terminal arrangement, refer to ES - 36.)

Resistance (open circuit check)

Inspection terminals	Inspection conditions	Standard value
1 (ST CUT relay holder) - A35-34 (STAR)	Always	Less than 1 Ω

Resistance (short circuit check)

Inspection terminals	Inspection conditions	Standard value
1 (ST CUT relay holder) and A35-34 (STAR) - other terminals and chassis ground	Always	10 k Ωor more

CAUTION:
When using tester probes to take measurements at a relay holder, do not push them hard against the holder. Otherwise the holder could be damaged.

NG → Repair or replacement of wiring harness or connector

OK

Starter system check (models with smart entry & start system) (Refer to ES - 610)

9	Clear DTC

(1) Connect the SSM4 to the DLC3.
(2) Turn the ignition switch to ON.
(3) Turn on the SSM4.

(4) Follow the SSM4 on-screen instructions to clear the DTCs. (Refer to ES - 28)
(5) Turn the ignition switch to OFF, and wait for 30 seconds.

Next

10	Perform test drive for operation check

(1) Perform test drive. (Refer to "Test drive" under "Description of functions")
(2) Follow the SSM4 on-screen instructions to check the DTC. (Refer to ES - 28)

Result	Go to
No DTC is output	A
P0512, P0616, P0617, or P081A is output.	B

B → Replacement of the engine control computer (Refer to ES - 670)

A

Inspection for problems that do not normally occur (Refer to ES - 28)

DTC	P0560	Backup Power Supply

Circuit description
The power from the battery is always supplied to the BATT terminal. The power supply is used for storing DTCs.

MONITOR DESCRIPTION
The battery supplies power to the ECM even when the ignition switch is OFF. This power allows the ECM to record data such as DTC history, freeze frame data, and F/B learning values. When the battery voltage falls below the minimum level, memory becomes cleared, and the ECM judges it as a power supply circuit malfunction. When the engine is started subsequently, the ECM turns on the MIL and records the DTC.

DTC No.	DTC detection conditions	Suspected parts
P0560	While the engine is running, the terminal voltage of the back-up power supply is 3.5 V or less for 2.5 seconds or more. (1 trips detection logic)	• Open circuit in back-up power supply circuit • Battery • Battery terminal • ECM

NOTE:
If DTC P0560 is recorded, the ECM does not record other DTCs, or the data recorded in the ECM becomes partially cleared.

Monitor strategy

Related DTCs	P0560: Back-up power supply for memory of ECM functional check
Required Sensors/Components (Main)	ECM
Required Sensors/Components (Related)	-
Frequency of Operation	Continuous
Duration	2.5 seconds

MIL Operation	Immediately after
Sequence of Operation	None

TYPICAL ENABLING CONDITIONS

Overlap prohibited DTC	None
Battery Voltage	10.9V or more

TYPICAL MALFUNCTION THRESHOLDS

Voltage of back-up power supply	3.5 V or less

Circuit figure

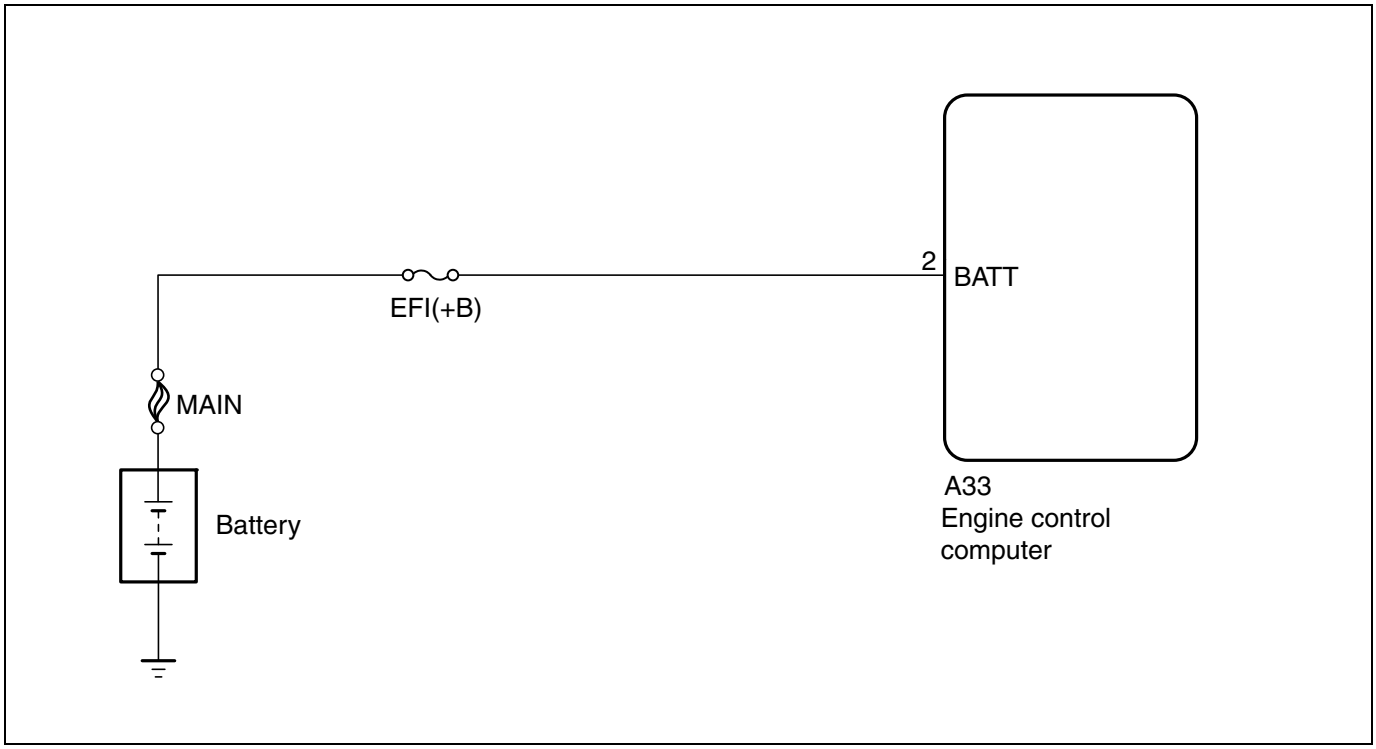

Description of functions

Test drive

Perform test drive to check if the DTC recurs.

1. Connect the SSM4 to the DLC3.
2. Turn the ignition switch to ON.
3. Turn on the SSM4.
4. Follow the SSM4 on-screen instructions to clear the DTCs. (Refer to ES - 28)
5. Turn the ignition switch to OFF, and wait for 30 seconds.
6. Turn the ignition switch to ON.
7. Turn on the SSM4.
8. Start the engine.
   NOTE:
   If the engine cannot be started, crank the engine for 10 seconds or more.
9. Idle the engine for 20 seconds or more.
10. Follow the SSM4 on-screen instructions to check the DTCs. (Refer to ES - 28)

Inspection steps
CAUTION:
Before performing troubleshooting, check the fuse for this circuit.

1	Check wiring harness and connector (engine control computer - battery)

CAUTION:
After turning the ignition switch to OFF, you may have to wait for a while before disconnecting the battery terminals. Check appropriate precautions for battery terminal disconnection before proceeding. (Refer to IN - 6)
NOTE:
For the inspection procedure and precautions for wiring harnesses and connectors, refer to IN - 36.
(1) Disconnect the battery ground terminal. (Refer to BH - 31)
(2) Disconnect the positive terminal from the battery.
(3) Disconnect the connector for the engine control computer.
(4) Measure the resistance between the terminals. (For terminal arrangement, refer to ES - 36.)

Resistance (open circuit check)

Inspection terminals	Inspection conditions	Standard value
A33-2 (BATT) - battery positive terminal	Always	Less than 1 Ω

Resistance (short circuit check)

Inspection terminals	Inspection conditions	Standard value
A33-2 (BATT) and battery positive terminal - other terminals and chassis ground	Always	10 k Ωor more

NG → Repair or replacement of wiring harness or connector

OK

2	Charging system check

(1) Perform on-board inspection on the battery and the charging system. (Refer to BH - 3)

NG → Repair or replacement of problem area

OK

3	Clear DTC

(1) Connect the SSM4 to the DLC3.
(2) Turn the ignition switch to ON.
(3) Turn on the SSM4.
(4) Follow the SSM4 on-screen instructions to clear the DTCs. (Refer to ES - 28)
(5) Turn the ignition switch to OFF, and wait for 30 seconds.

Next

4	Perform test drive for operation check

(1) Perform test drive. (Refer to "Test drive" under "Description of functions")
(2) Follow the SSM4 on-screen instructions to check the DTC. (Refer to ES - 28)

Result

Result	Go to
No DTC is output	A
P0560 is output.	B

ES

B → Replacement of the engine control computer (Refer to ES - 670)

A

Inspection for problems that do not normally occur (Refer to ES - 28)

DTC	P0604	Internal Control Module Random Access Memory (RAM) Error
DTC	P0605	Internal Control Module Read Only Memory (ROM) Error
DTC	P0606	Micro-computer (CPU Failure)
DTC	P060A	Internal Control Module Monitoring Processor Performance
DTC	P060B	Internal Control Module A/D Processing Performance
DTC	P062F	EEPROM Error

Circuit description

When this DTC is recorded, the engine control computer shuts off electric power supply to the throttle motor, allowing the return spring to act on the throttle valve so that the valve returns to the predetermined opening angle position. If the engine control computer detects a problem, it turns on the MIL and records the diagnostic codes.

DTC No.	DTC detection conditions	Suspected parts
P0604	ECM internal error (RAM) (1 trips detection logic)	ECM
P0605	ECM internal error (ROM) (1 trips detection logic)	
P0606	ECM internal error (processor) (1 trips detection logic)	
P060A	ECM internal error (monitoring processor) (1 trips detection logic)	
P060B	ECM internal error (A/D processor) (1 trips detection logic)	
P062F	ECM internal error (EEPROM) (1 trips detection logic)	

Monitor strategy

Related DTCs	P0604: RAM in ECM functional check P0605: ROM in ECM functional check P0606: Control module processor functional check P060A: Internal control module monitoring processor performance functional check P060B: Internal control A/D processing performance functional check P062F: Internal control EEPROM error functional check
Required Sensors/Components (Main)	ECM
Required Sensors/Components (Related)	-
Frequency of Operation	Continuous: P0606, P060A, P060B Once per driving cycle: P0604, P0605, P062F
Duration	0.512 seconds: P0604, P0605 Twice: P0606 (instruction check) (Case 1) 0.512 seconds: P0606 (instruction check) (Case 2) 0.504 seconds: P0606 (software flow check) 0.048 seconds: P0606 (software monitor check) 2.5 seconds: P0606 (output driver communication check) Immediately after: P0606 (CAN resistor check) 0.024 seconds: P060A (disabled function observation IC) 2.984 seconds: P060A (error in observation IC calculation) 0.2 seconds: P060A (monitoring of observation IC register) 0.2 seconds: P060B 2 driving cycles: P062F
MIL Operation	Immediately after
Sequence of Operation	None

TYPICAL ENABLING CONDITIONS

All

Overlap prohibited DTC	None

P0604, P0605

Ignition switch	OFF →ON

P0606 (instruction check) (Case 1)

Ignition switch	OFF →ON

P0606 (instruction check) (Case 2)

ETCS relay	ON
Battery Voltage	6.2V or more

P0606 (software monitor check)

ETCS relay	ON
Battery Voltage	6.2V or more

P060A (disabled function observation IC)

Battery Voltage	6V or more
Continuity of main-throttle sensor circuit	No problem
Continuity of sub-throttle sensor circuit	No problem
Throttle sensor range/performance problem check	No problem
Disabling of microcomputer	OFF
Disabling of observation IC	ON

P060A (error in observation IC calculation)

Battery Voltage	6V or more

P060A (observation IC register monitor)

Battery Voltage	6V or more

P060B

Battery Voltage	6V or more

TYPICAL MALFUNCTION THRESHOLDS

P0604

Setting value can be written in all RAM regions, and the value can be read accurately.	Unable to read accurately

P0605

Comparison of ROM check sum data with calculated sum data	Not equal

P0606 (instruction check) (Case 1)

Instruction error	Detected

P0606 (instruction check) (Case 2)

Comparison with operation data and estimates in CPU and FPU (Floating point number Processing Unit)	Not equal

P0606 (software flow check)

Software flow error	Detected

P0606 (output driver communication check)

Driver IC communication	Malfunction
Driver IC port voltage check	Low

P0606 (CAN resistor check)

Comparison between data written in CAN resistor and data read out from CAN resistor	Not equal

P060A (disabled function observation IC)

Throttle angle - memory throttle angle being monitored	1.6% or more

P060A (error in observation IC calculation)

Request for disabling of observation IC	Not detected

P060A (observation IC register monitor)

Comparison between data written in observation IC register and data read out from observation IC register	Not equal

P060B

When one of the following conditions is met:	A or B
A. 0 is indicated when A/D voltage for monitoring - target A/D voltage is 0 V.	More than 0.02 V
B. 5 - A/D voltage when monitoring at a target A/D voltage of 5 V	Less than 4.979V

P062F (observation IC register monitoring)

Failure to write into EEPROM	Detected

Description of functions

Test drive

Perform test drive to check if the DTC recurs.

1. Connect the SSM4 to the DLC3.
2. Turn the ignition switch to ON.
3. Turn on the SSM4.
4. Follow the SSM4 on-screen instructions to clear the DTCs. (Refer to ES - 28)
5. Turn the ignition switch to OFF, and wait for 30 seconds.

6. Turn the ignition switch to ON.
7. Turn on the SSM4.
8. Start the engine.
   NOTE:
   If the engine cannot be started, crank the engine for 10 seconds or more.
9. Idle the engine for 20 seconds or more.
10. Follow the SSM4 on-screen instructions to check the DTC. (Refer to ES - 28)

Inspection steps

ES

NOTE:
Read the freeze frame data using the SSM4. A part of the engine running conditions under which the engine trouble occurred is recorded in the freeze frame data, which is useful for troubleshooting.

1	Clear DTC

(1) Connect the SSM4 to the DLC3.
(2) Turn the ignition switch to ON.
(3) Turn on the SSM4.
(4) Follow the SSM4 on-screen instructions to clear the DTCs. (Refer to ES - 28)
(5) Turn the ignition switch to OFF, and wait for 30 seconds.

Next

2	Read DTC

(1) Perform test drive. (Refer to "Test drive" under "Description of functions")
(2) Follow the SSM4 on-screen instructions to check the DTC. (Refer to ES - 28)

Result

Result	Go to
The same DTCs are displayed again.	A
Other DTCs are displayed again.	B
No DTC is output	C

NOTE:
If any DTCs other than P0604, P0605, P0606, P060A, P060B, or P062F are output, troubleshoot them first.

B → To corresponding DTC chart (refer to ES - 12)

C → Inspection for problems that do not normally occur (Refer to ES - 28)

A

Replacement of the engine control computer (Refer to ES - 670)

DTC	P062D	No.1 Fuel Injector Driver Circuit Performance

DTC	P1261	DI Injector Circuit / Open - (Cylinder 1)

DTC	P1262	DI Injector Circuit / Open - (Cylinder 2)

DTC	P1263	DI Injector Circuit / Open - (Cylinder 3)

DTC	P1264	DI Injector Circuit / Open - (Cylinder 4)

Circuit description

The D-4S system has direct fuel injection system that supplies high pressure fuel directly into the combustion chambers, and port fuel injection system that supplies fuel into the intake port. The D-4S uses either of these systems depending on engine operation condition. In the cylinder injection system, the injector drivers (EDU) that activate high-pressure fuel injectors at a high speed are located in the engine compartment. Injection request signal from the engine control computer is converted into high-voltage/high-current injector drive signal to drive the fuel injector ASSY (cylinder injection side).

DTC No.	DTC detection conditions	Suspected parts
P062D	When injection to all cylinders is completed, the diagnosis signal from the EDU does not change (open/short condition in injector or EDU circuit) (1 trips detection logic)	• Open/short circuit in injector driver (EDU) circuit • Injector driver (EDU) • ECM
P1261	When injection to No. 1 cylinder is completed, the diagnosis signal from the injector driver (EDU) does not change (open/short condition in No. 1 cylinder injector circuit) (1 trips detection logic)	• Open/short circuit in injector driver (EDU) circuit (No. 1 cylinder) • Injector driver (EDU) • Direct injection fuel injector (No. 1 cylinder) • ECM
P1262	When injection to No. 2 cylinder is completed, the diagnosis signal from the injector driver (EDU) does not change (open/short condition in No. 2 cylinder injector circuit) (1 trips detection logic)	• Open/short circuit in injector driver (EDU) circuit (No. 2 cylinder) • Injector driver (EDU) • Direct injection fuel injector (No. 2 cylinder) • ECM
P1263	When injection to No. 3 cylinder is completed, the diagnosis signal from the injector driver (EDU) does not change (open/short condition in No. 3 cylinder injector circuit) (1 trips detection logic)	• Open/short circuit in injector driver (EDU) circuit (No. 3 cylinder) • Injector driver (EDU) • Direct injection fuel injector (No. 3 cylinder) • ECM
P1264	When injection to No. 4 cylinder is completed, the diagnosis signal from the injector driver (EDU) does not change (open/short condition in No. 4 cylinder injector circuit) (1 trips detection logic)	• Open/short circuit in injector driver (EDU) circuit (No. 4 cylinder) • Injector driver (EDU) • Direct injection fuel injector (No. 4 cylinder) • ECM

Monitor strategy

Related DTCs	P062D: Fuel injector driver circuit functional check P1261: Direct fuel injector functional check (Cylinder 1) P1262: Direct fuel injector functional check (Cylinder 2) P1263: Direct fuel injector functional check (Cylinder 3) P1264: Direct fuel injector functional check (Cylinder 4)
Required Sensors/Components (Main)	Direct injection injector, injector driver (EDU)

Required Sensors/Components (Related)	-
Frequency of Operation	Continuous
Duration	0.23 seconds or more (varies depending on engine speed - refer to "Map1"): P062D 20 counts [0.33 seconds or more (varies depending on engine speed - refer to "Map2")]: P1261, P1262, P1263, P1264
MIL Operation	Immediately after
Sequence of Operation	None

ES

Map1

Engine speed (r/min)	500	2000	4000	6000	8000
Time required (sec)	3.60	0.90	0.45	0.30	0.23

Map2

Engine speed (r/min)	650	1000	2000	4000	6000	7200
Time to reach 20 counts (sec)	3.69	2.40	1.20	0.60	0.40	0.33

TYPICAL ENABLING CONDITIONS

Overlap prohibited DTC	None
Battery Voltage	9.4V or more
Engine Speed	7450 r/min or less

TYPICAL MALFUNCTION THRESHOLDS

P062D

Falling edge of all injectors	Not detected

P1261, P1262, P1263, P1264

Falling edge of injector output signal from the injector driver (EDU)	Not detected

IJF1 - IJF2 signal

INJ No.	Cylinder group
IJF1	No. 1 cylinder (IJ1) No. 2 cylinder (IJ2)
IJF2	No. 3 cylinder (IJ3) No. 4 cylinder (IJ4)

Circuit figure

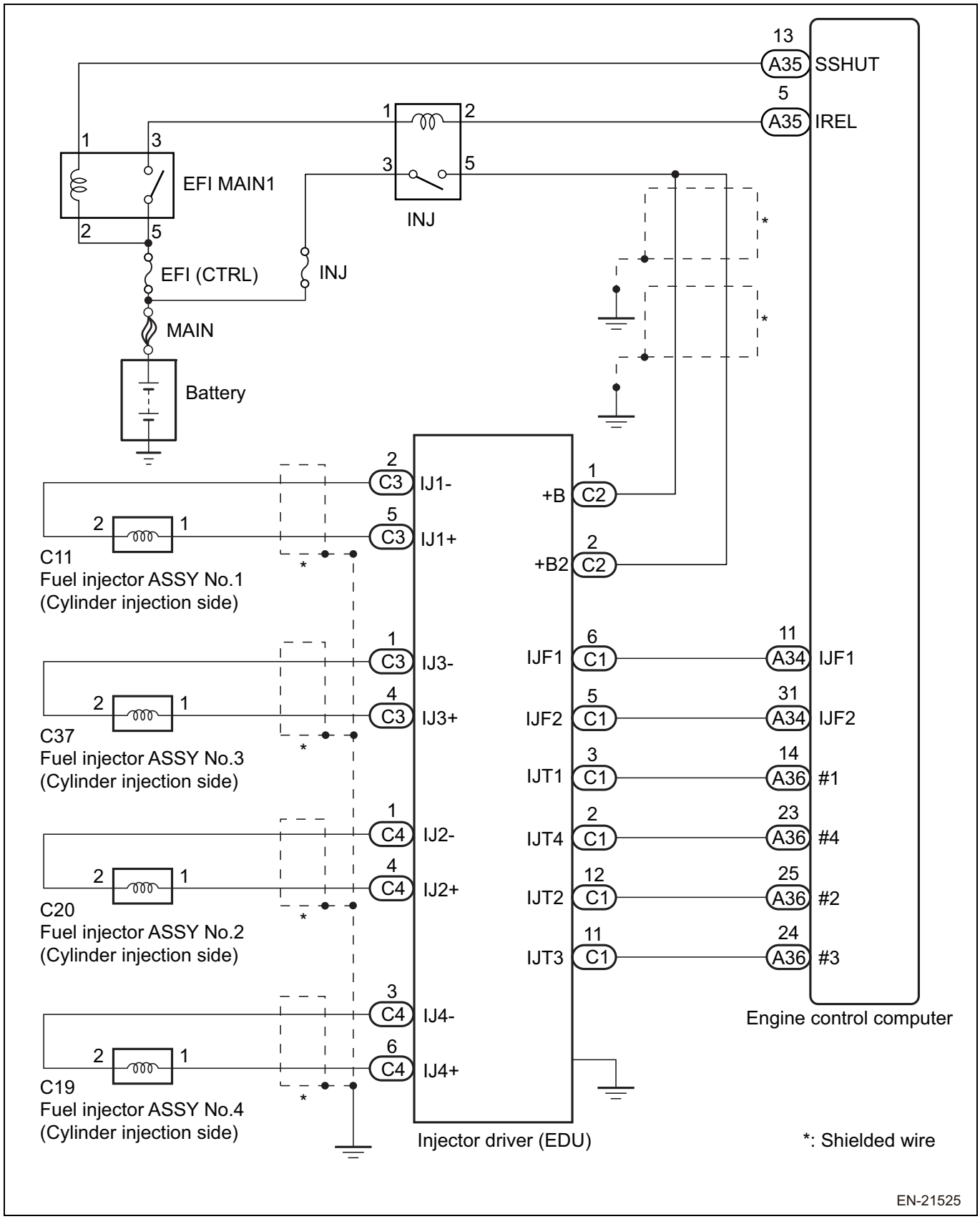

Description of functions

Test drive

Perform test drive to check if the DTC recurs.

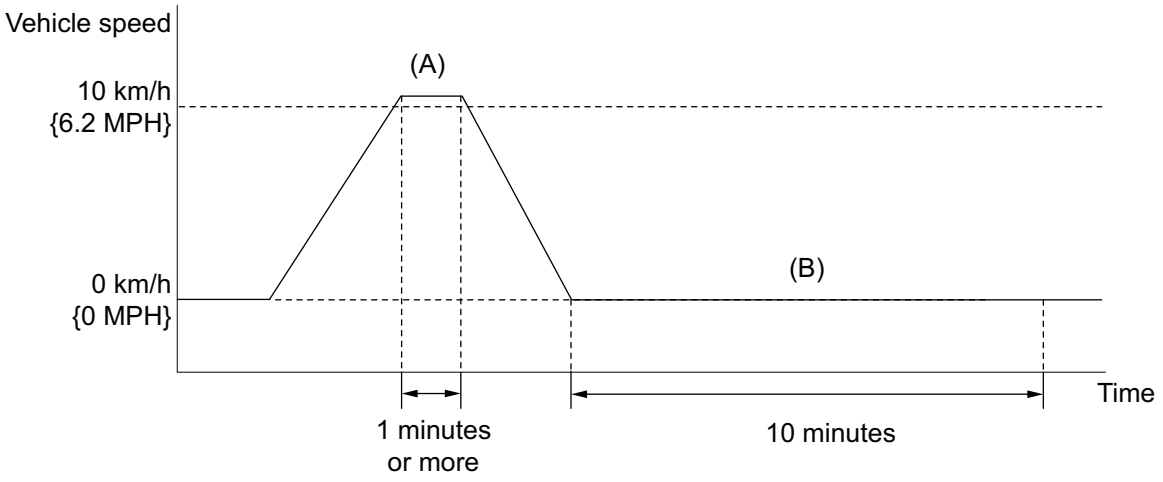

1. Connect the SSM4 to the DLC3.
2. Turn the ignition switch to ON.
3. Turn on the SSM4.
4. Follow the SSM4 on-screen instructions to clear the DTCs. (Refer to ES - 28)
5. Turn the ignition switch to OFF, and wait for 30 seconds.
6. Turn the ignition switch to ON.
7. Turn on the SSM4.
8. Start the engine.
9. Perform driving test as follows.
   WARNING:
   When performing this driving test, always observe the applicable traffic laws such as the speed limit.
   (a) Drive at 10 km/h {6.2 MPH} or more for 1 minute or more. (A)
   (b) Stop the vehicle.
   (c) Idle the engine for 10 minutes or more. (B)
10. Follow the SSM4 on-screen instructions to check the DTC. (Refer to ES - 28)

Inspection steps

CAUTION:

Check fuses in this circuit before performing the troubleshooting.

NOTE:

- If DTC P1261 is displayed, inspect the fuel injector circuit of the No. 1 cylinder.
- If DTC P1262 is displayed, inspect the fuel injector circuit of the No. 2 cylinder.
- If DTC P1263 is displayed, inspect the fuel injector circuit of the No. 3 cylinder.
- If DTC P1264 is displayed, inspect the fuel injector circuit of the No. 4 cylinder.
- Read the freeze frame data using the SSM4. A part of the engine running conditions under which the engine trouble occurred is recorded in the freeze frame data, which is useful for troubleshooting.

1	Read DTC

(1) Connect the SSM4 to the DLC3.
(2) Turn the ignition switch to ON.
(3) Follow the SSM4 on-screen instructions to check the DTC. (Refer to ES - 28)

Result

Result	Go to
P1261, P1262, P1263, or P1264 is output.	A
P062D is output	B

B → Go to Step 6.

A

2	Check wiring harness and connector (resistance check)

NOTE:
For the inspection procedure and precautions for wiring harnesses and connectors, refer to IN - 36.
(1) Disconnect injector driver connectors.
(2) Measure the resistance between the terminals.

ES

Resistance (open circuit check)

Inspection terminals	Inspection conditions	Standard value
C3-2 (IJ1-) - C3-5 (IJ1+)	20°C {68°F}	1.74 to 2.04 Ω
C4-1 (IJ2-) - C4-4 (IJ2-)	20°C {68°F}	1.74 to 2.04 Ω
C3-1 (IJ3-) - C3-4 (IJ3+)	20°C {68°F}	1.74 to 2.04 Ω
C4-3 (IJ4-) - C4-6 (IJ4+)	20°C {68°F}	1.74 to 2.04 Ω

NOTE:
The standard value indicates the resistance of the fuel injector ASSY.

Resistance (short circuit check)

Inspection terminals	Inspection conditions	Standard value
C3-2 (IJ1-) and C3-5 (IJ1+) - other terminals and chassis ground	20°C {68°F}	1 MΩ or more
C4-1 (IJ2-) and C4-4 (IJ2+) - other terminals and chassis ground	20°C {68°F}	1 MΩ or more
C3-1 (IJ3-) and C3-4 (IJ3+) - other terminals and chassis ground	20°C {68°F}	1 MΩ or more
C4-3 (IJ4-) and C4-6 (IJ4+) - other terminals and chassis ground	20°C {68°F}	1 MΩ or more

NG → Go to Step 8.

OK

3	Check wiring harness and connector (engine control computer - injector driver)

NOTE:
For the inspection procedure and precautions for wiring harnesses and connectors, refer to IN - 36.
(1) Disconnect the connector for the engine control computer.
(2) Disconnect injector driver connectors.
(3) Measure the resistance between the terminals. (For terminal arrangement, refer to ES - 36.)

Resistance (open circuit check)

Inspection terminals	Inspection conditions	Standard value
A36-14 (#1) - C1-3 (IJT1)	Always	Less than 1 Ω
A36-25 (#2) - C1-12 (IJT2)	Always	Less than 1 Ω
A36-24 (#3) - C1-11 (IJT3)	Always	Less than 1 Ω
A36-23 (#4) - C1-2 (IJT4)	Always	Less than 1 Ω

Resistance (short circuit check)

Inspection terminals	Inspection conditions	Standard value
A36-14 (#1) and C1-3 (IJT1) - other terminals and chassis ground	Always	10 k Ωor more
A36-25 (#2) and C1-12 (IJT2) - other terminals and chassis ground	Always	10 k Ωor more
A36-24 (#3) and C1-11 (IJT3) - other terminals and chassis ground	Always	10 k Ωor more
A36-23 (#4) and C1-2 (IJT4) - other terminals and chassis ground	Always	10 k Ωor more

ES

NG → Repair or replacement of wiring harness or connector

OK

4	Clear DTC

(1) Connect the SSM4 to the DLC3.
(2) Turn the ignition switch to ON.
(3) Follow the SSM4 on-screen instructions to clear the DTCs. (Refer to ES - 28)
(4) Turn the ignition switch to OFF, and wait for 30 seconds.

Next

5	Engine control computer check (ECM output voltage)

NOTE:
For the inspection procedure and precautions for wiring harnesses and connectors, refer to IN - 36.
(1) Disconnect injector driver connectors.
(2) Output waveform check
  (a) Using an oscilloscope, check the waveform.

Inspection terminals	Equipment setting	Inspection conditions
CH1: A36-14 (#1) or A36-23 (#4) - chassis ground	2 V/DIV, 4 ms/DIV	When cranking
CH1: A36-25 (#2) or A36-24 (#3) - chassis ground	2 V/DIV, 4 ms/DIV	When cranking

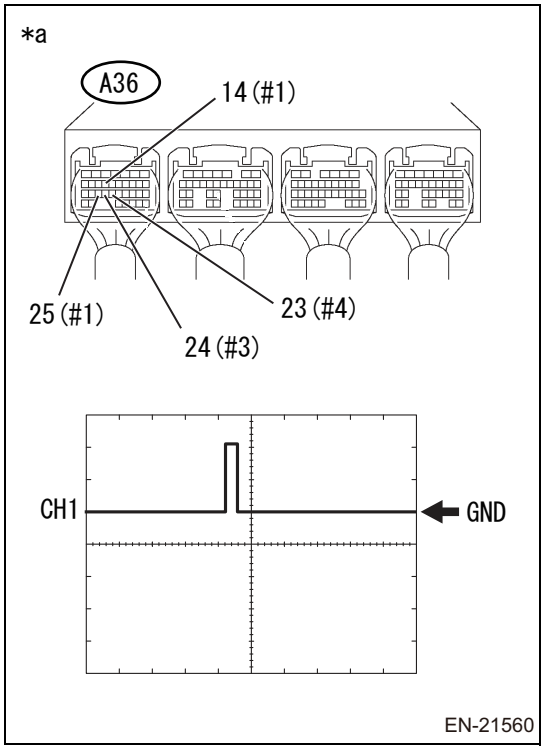

(b) Crank the engine to check if a waveform is output.

Captions in illustration

*a	Connector connected (engine control computer)

NG → Replacement of the engine control computer (Refer to ES - 670)

OK

Replacement of injector driver (Refer to FU - 43)

6	Check wiring harness and connector (engine control computer - injector driver)

NOTE:
For the inspection procedure and precautions for wiring harnesses and connectors, refer to IN - 36.

(1) Disconnect the connector for the engine control computer.
(2) Disconnect injector driver connectors.
(3) Measure the resistance between the terminals. (For terminal arrangement, refer to ES - 36.)

Resistance (open circuit check)

Inspection terminals	Inspection conditions	Standard value
A34-11 (IJF1) - C1-6 (IJF1)	Always	Less than 1 Ω
A34-31 (IJF2) - C1-5 (IJF2)	Always	Less than 1 Ω

Resistance (short circuit check)

Inspection terminals	Inspection conditions	Standard value
A34-11 (IJF1) and C1-6 (IJF1) - other terminals and chassis ground	Always	10 k Ωor more
A34-31 (IJF2) and C1-5 (IJF2) - other terminals and chassis ground	Always	10 k Ωor more

NG → Repair or replacement of wiring harness or connector

OK

7	Engine control computer check (ECM output voltage)

NOTE:
For the inspection procedure and precautions for wiring harnesses and connectors, refer to IN - 36.

(1) Disconnect injector driver connectors.
(2) Output waveform check
  (a) Using an oscilloscope, check the waveform.

ES

Inspection terminals	Equipment setting	Inspection conditions
CH1: A34-11 (IJF1) - chassis ground	2 V/DIV, 4 ms/DIV	During idling
CH1: A34-31 (IJF2) - chassis ground	2 V/DIV, 4 ms/DIV	During idling

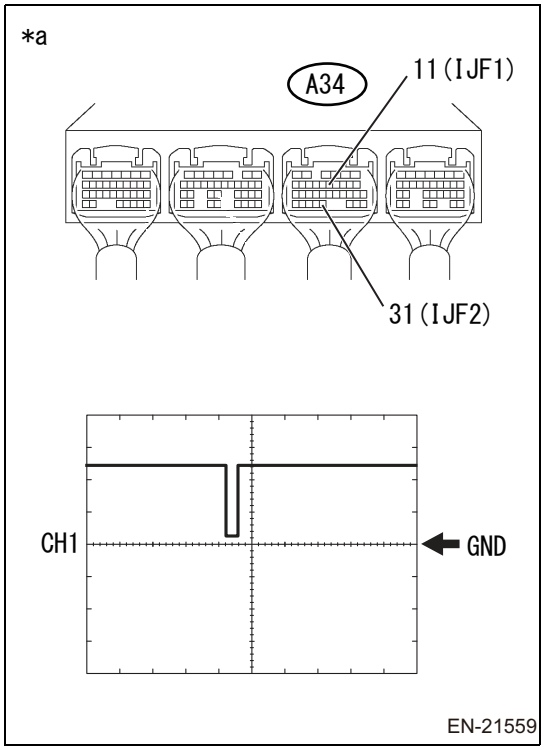

  (b) Start the engine to check if a waveform is output.

Captions in illustration

*a	Connector connected (engine control computer)

NG → Replacement of the engine control computer (Refer to ES - 670)

OK

Replacement of injector driver (Refer to FU - 43)

8	Fuel injector ASSY unit inspection (cylinder injection side)

(1) Perform unit inspection of the fuel injector ASSY (cylinder injection side). (Refer to FU - 39)

NG → Replacement of fuel injector ASSY (direct injection side) (Refer to FU - 31)

OK

Repair or replacement of wiring harness or connector

DTC	P0685	Main Relay ON Stuck

Circuit description

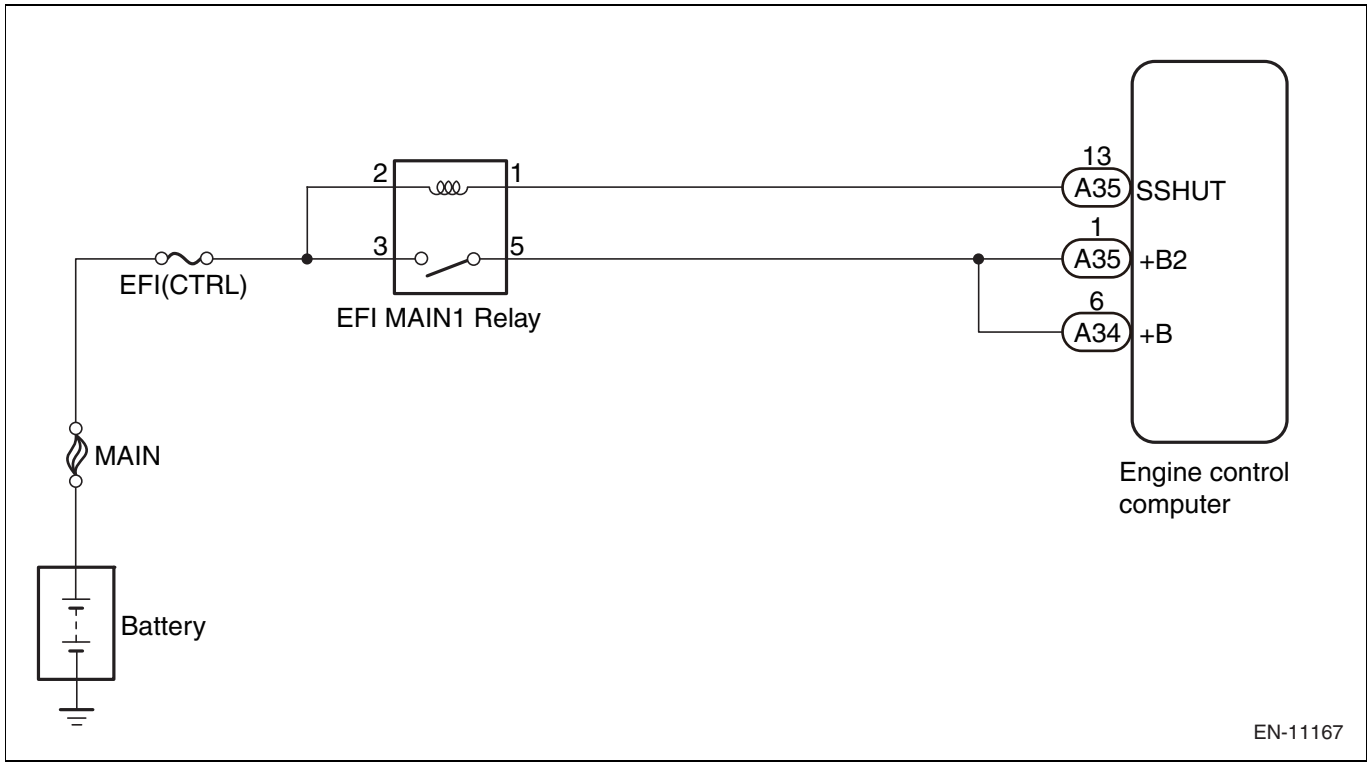

DTC No.	DTC detection conditions	Suspected parts
P0685	After IG OFF, the main relay is not switched OFF and the ECM operates longer than the specified time period. (2 trips detection logic)	Main relay

MONITOR STRATEGY

Frequency of Operation	Once per driving cycle
Duration	2.5 seconds
MIL Operation	2 operation cycle
Sequence of Operation	None

ENABLING CONDITIONS

Main relay command	OFF

TYPICAL MALFUNCTION THRESHOLDS

ECM status	In operation

Description of functions

Test drive

Perform test drive to check if the DTC recurs.

1. Connect the SSM4 to the DLC3.
2. Turn the ignition switch to ON.
3. Turn on the SSM4.
4. Follow the SSM4 on-screen instructions to clear the DTCs. (Refer to ES - 28)
5. Turn the ignition switch to OFF, and wait for 30 seconds.
6. Turn the ignition switch to ON.

7. Turn on the SSM4.
8. Start the engine.
   NOTE:
   If the engine cannot be started, crank the engine for 10 seconds or more.
9. Idle the engine for 20 seconds or more.
10. Follow the SSM4 on-screen instructions to check the DTC. (Refer to ES - 28)

Inspection steps

ES

1	Check ECM connector

(1) Check the connection of the ECM connector.

Result

Result	Go to
Not connected	A
Connected	B

B → Connect the connector properly.

A

2	Check ECM input voltage.

(1) Turn the ignition switch to OFF.
(2) Measure the voltage between ECM connector and chassis ground.

Inspection terminals	Inspection conditions	Standard value
A35-1 (+B) - chassis ground	IG OFF	0 V

NG → Recheck the harness and connector for a poor contact. If no poor contact is found, replace the ECM.

OK

Repair harness and connector.

DTC P0700 AT-MIL lighting request

Circuit description

The engine control computer communicates with transmission control computer via CAN communication. When illumination of the MIL is requested because of ECT system malfunction, the engine control computer stores this DTC.

DTC No.	DTC detection conditions	Suspected parts
P0700	Automatic transmission system malfunction information is received from the TCM. (1 trips detection logic)	• Automatic transmission system • ECM

Monitor strategy

Related DTCs	P0700: Transmission control system (MIL request) functional check
Required Sensors/Components (Main)	ECM

Required Sensors/Components (Related)	-
Frequency of Operation	Continuous
Duration	0.128 seconds
MIL Operation	Immediately after
Sequence of Operation	None

TYPICAL ENABLING CONDITIONS

Overlap prohibited DTC	U0073, U0101, U0402 (CAN System)
Battery Voltage	10.9V or more

TYPICAL MALFUNCTION THRESHOLDS

Request flag from the MIL	Set

Circuit figure

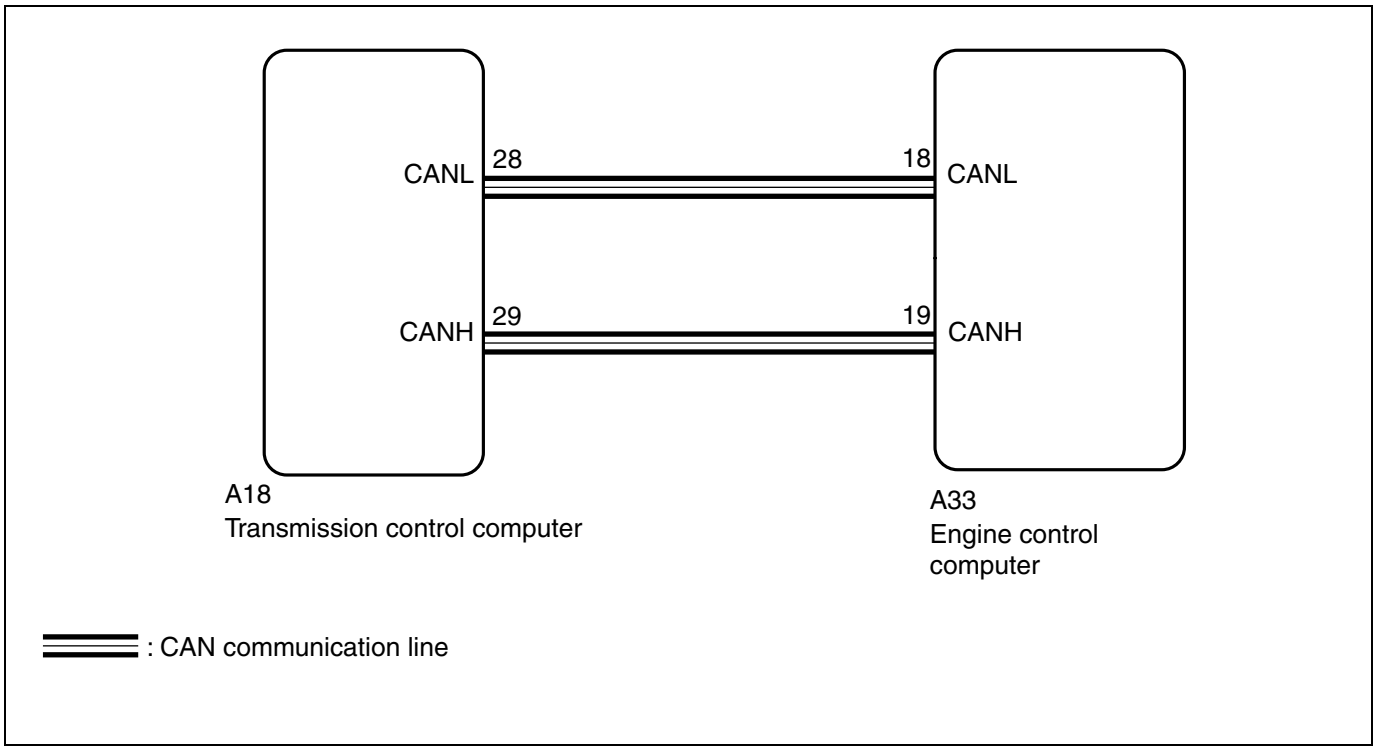

Description of functions

Test drive

Perform test drive to check if the DTC recurs.

1. Connect the SSM4 to the DLC3.
2. Turn the ignition switch to ON.
3. Turn on the SSM4.
4. Follow the SSM4 on-screen instructions to clear the DTCs. (Refer to ES - 28)
5. Turn the ignition switch to OFF, and wait for 30 seconds.
6. Turn the ignition switch to ON.
7. Turn on the SSM4.
8. Start the engine.
   NOTE:
   If the engine cannot be started, crank the engine for 10 seconds or more.
9. Idle the engine for 20 seconds or more.
10. Follow the SSM4 on-screen instructions to check the DTC. (Refer to ES - 28)

Inspection steps

NOTE:

Read the freeze frame data using the SSM4. A part of the engine running conditions under which the engine trouble occurred is recorded in the freeze frame data, which is useful for troubleshooting.

1	Read DTC (ECT system)

(1) Connect the SSM4 to the DLC3.
(2) Turn the ignition switch to ON.
(3) Follow the SSM4 on-screen instructions to check the DTC of the ECT system. (Refer to AT - 17)

Result

Result	Go to
No DTC is output.	A
DTC is output.	B

B → To corresponding DTC chart (refer to AT - 11)

A

2	Clear DTC

(1) Connect the SSM4 to the DLC3.
(2) Turn the ignition switch to ON.
(3) Follow the SSM4 on-screen instructions to clear the DTCs. (Refer to ES - 28)

Next

3	DTC recheck

(1) Connect the SSM4 to the DLC3.
(2) Turn the ignition switch to ON.
(3) Follow the SSM4 on-screen instructions to check the DTCs. (Refer to ES - 28)

Result

Result	Go to
P0700 is not output.	A
P0700 is output.	B

B → Replacement of the engine control computer (Refer to ES - 670)

A

Inspection for problems that do not normally occur (Refer to ES - 28)

DTC	P0851	Neutral switch circuit Low

DTC	P0852	Neutral switch circuit High

Circuit description

The engine control computer detects that the transmission is in the neutral state based on the signal from the neutral position switch (for Transmission M/T) or the neutral start switch ASSY (for Transmission A/T).

DTC No.	DTC detection conditions	Suspected parts
P0851	Transmission M/T	
	When shifting the gear position while driving the vehicle, the neutral position switch is left "Low". (Detected based on the change of relationship between the vehicle speed and the engine speed) (2 trips detection logic)	• Open or short condition in the neutral switch signal circuit • Neutral start switch • ECM
	Transmission A/T	
	When the range selector is neither in N nor P range, the neutral switch is in P or N range and the range information from the transmission control computer indicates a position other than P or N range.	• Open or short condition in the neutral switch signal circuit • Neutral start switch • ECM
	When the range selector is in N or P range, the neutral switch is in P or N range and the range information from the transmission control computer indicates a position other than P or N range.	• TCM
P0852	Transmission M/T	
	When shifting the gear position while driving the vehicle, the neutral position switch is left "High". (Detected based on the change of relationship between the vehicle speed and the engine speed) (2 trips detection logic)	• Open or short condition in the neutral switch signal circuit • Neutral start switch • ECM
	Transmission A/T	
	When the range selector is in N or P range, the neutral switch is in a range other than P or N ranges and the range information from the transmission control computer indicates P or N range.	• TCM
	When the range selector is neither in N nor P range, the neutral switch is in a range other than P or N range and the range information from the transmission control computer indicates P or N range.	• Open or short condition in the neutral switch signal circuit • Neutral start switch • ECM

MONITOR DESCRIPTION

Transmission M/T

Unless the ON/OFF signal is input from the neutral position switch, a DTC will be recorded based on the vehicle speed or the engine speed, regardless of whether the gear position is shifted.

Transmission A/T

When there is a problem in the neutral start switch circuit, a DTC will be recorded.

A DTC will be detected when the signal from the neutral start switch does not match that received from the TCM.

Monitor strategy

Related DTCs	P0851: Neutral position switch circuit continuity (Low voltage) P0852: Neutral position switch circuit continuity (High voltage)
Required Sensors/Components (Main)	Neutral start switch Neutral position switch
Required Sensors/Components (Related)	-
Frequency of Operation	Once per driving cycle

Duration	1 count: Transmission M/T 6.4 seconds: Transmission A/T
MIL Operation	2 operation cycle
Sequence of Operation	None

TYPICAL ENABLING CONDITIONS

Transmission M/T

Overlap prohibited DTC	P0500 (Vehicle Speed Sensor (VSS))
Battery Voltage	10.9V or more
Number of the driving condition change from A to B described below:	1 time
A. All of the following conditions are met:	(a), (b)
(a) Vehicle speed	0 km/h {0 MPH} or less
(b) Engine speed	550 to 880 r/min
B. All of the following conditions are met:	(a), (b)
(a) Vehicle speed	64 km/h {40 MPH} or more
(b) Engine speed	1700 to 2700 r/min

Transmission A/T

Overlap prohibited DTC	P0616, P0617, P0512 (starter switch circuit with push start system) U0073, U0101, U0402 (CAN System)
Starter relay feedback voltage (Starter relay is not energized)	Battery voltage ×less than 0.35 V
Battery voltage	10.9V or more

P0851

Engine speed	500 RPM or more

TYPICAL MALFUNCTION THRESHOLDS

P0851 (Transmission M/T)

Transmission M/T switch signal	Battery voltage ×0.19 or less

P0852 (Transmission M/T)

Transmission M/T switch signal	Battery voltage ×0.6 or more

P0851 (Transmission A/T)

Neutral start switch signal	Battery voltage ×0.19 or less
Parking/neutral position from the TCM	Excluding P or N range

P0852 (Transmission A/T)

Neutral start switch signal	Battery voltage ×0.6 or more
Parking/neutral position from the TCM	P or N range

NOTE:

*: The engine control computer detects the selected gear and the state of gear shifting based on the relationship between the vehicle speed and the engine speed.

Circuit figure

Transmission M/T:

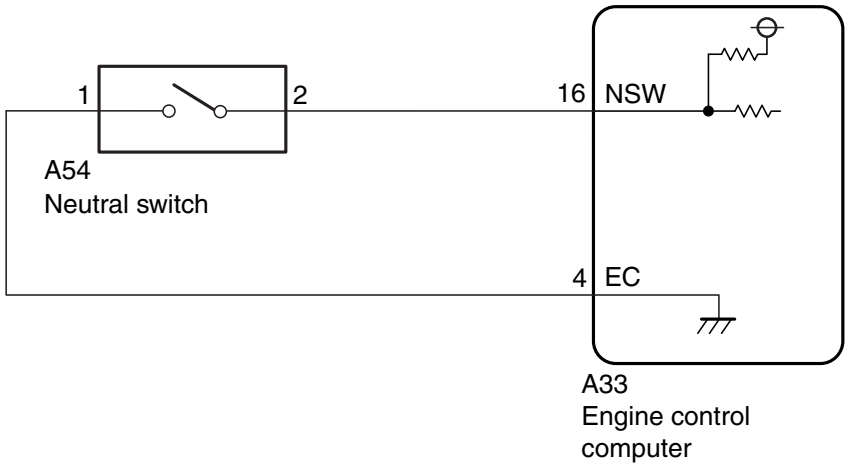

Transmission A/T:

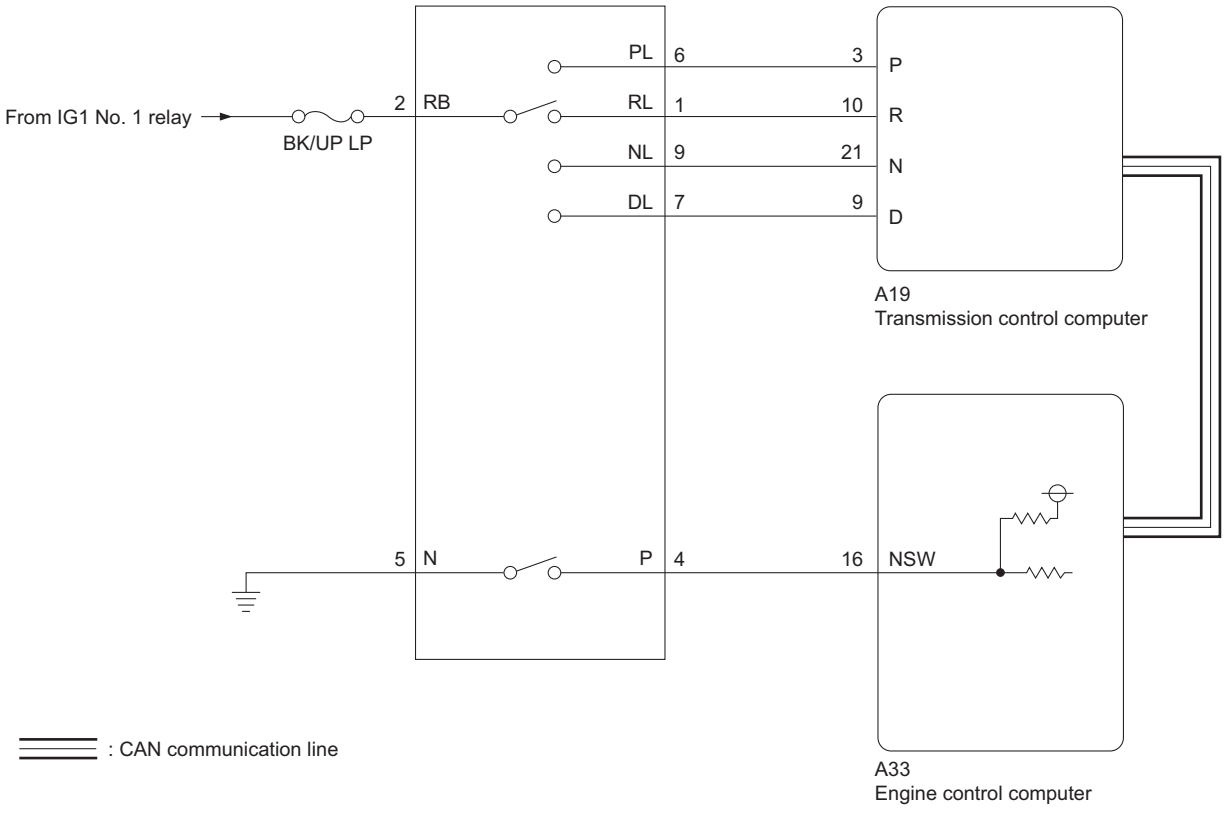

Description of functions

Test drive

Perform test drive to check if the DTC recurs.

Transmission M/T:

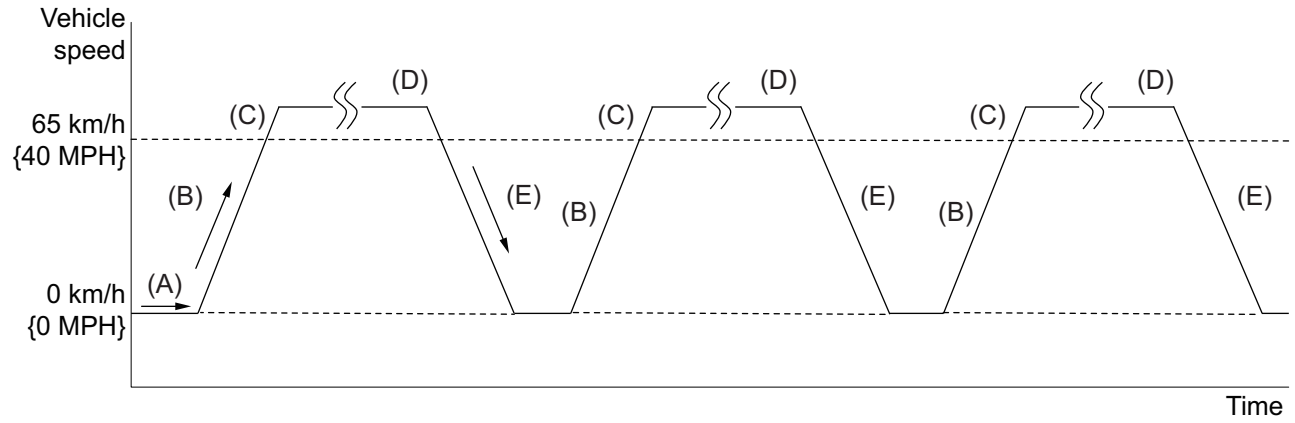

EN-22933

Transmission A/T :

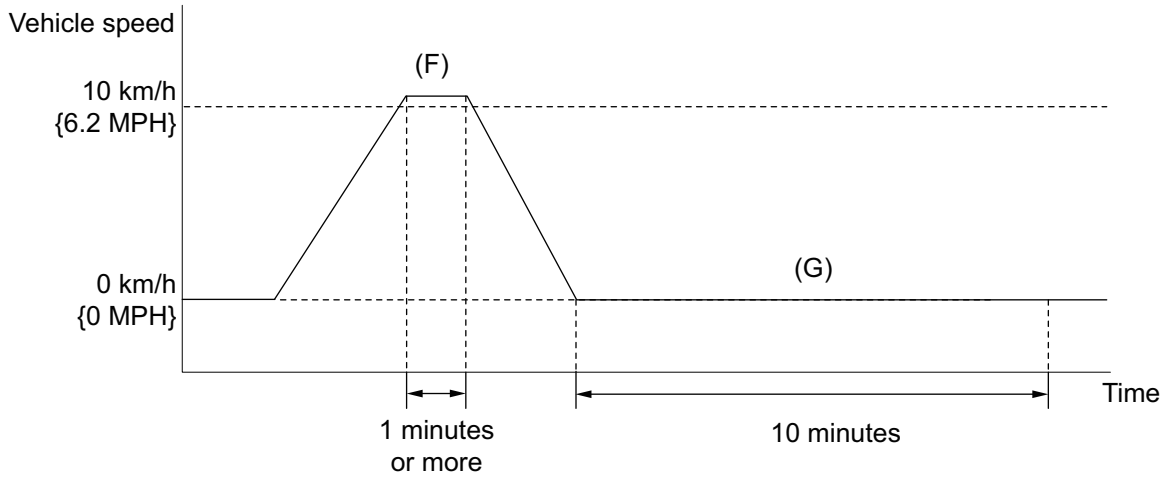

EN-22931

1. Connect the SSM4 to the DLC3.
2. Turn the ignition switch to ON.
3. Turn on the SSM4.
4. Follow the SSM4 on-screen instructions to clear the DTCs. (Refer to ES - 28)
5. Turn the ignition switch to OFF, and wait for 30 seconds.
6. Turn the ignition switch to ON.
7. Turn on the SSM4.
8. Start the engine.
9. Drive 3 times according to the (A) to (E) driving patterns. (Transmission M/T)
   WARNING:
   When performing this driving test, always observe the applicable traffic laws such as the speed limit.
   (a) Idle the engine for 5 seconds or more. (A)
   (b) Accelerate. (B)
   (c) The vehicle speed exceeds 65 km/h {40 MPH} with the fourth gear. (C)
   (d) Driving time (duration time is not specified) (D)
   (e) Decelerate and stop the vehicle. (Deceleration method is not specified) (E)
10. Drive at 10 km/h {6.2 MPH} or more for 1 minute or more. (Transmission A/T) (F)
    WARNING:
    When performing this driving test, always observe the applicable traffic laws such as the speed limit.
11. Stop the vehicle.
12. Idle the engine for 10 minute. (Transmission A/T) (G)
13. Follow the SSM4 on-screen instructions to check the DTC. (Refer to ES - 28)

Inspection steps

NOTE:

Read the freeze frame data using the SSM4. A part of the engine running conditions under which the engine trouble occurred is recorded in the freeze frame data, which is useful for troubleshooting.

1	Vehicle check

(1) Check the transmission.

Result

Result	Go to
Transmission M/T	A
Transmission A/T	B

B → Go to Step 5.

A

2	Check wiring harness and connector (neutral position switch power supply circuit)

NOTE:

Refer to IN - 36for inspection procedure and precautions of wiring harness and connector.

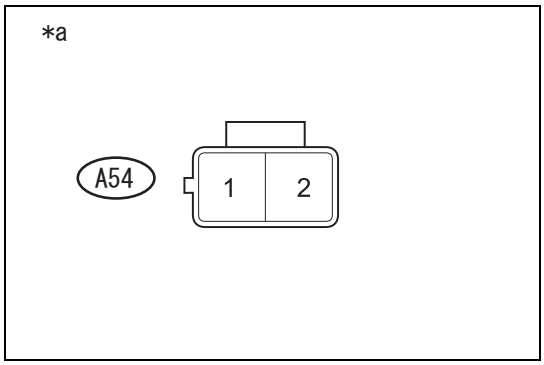

(1) Disconnect the connector of neutral position switch.

(2) Measure the voltage between the terminals.

Voltage

Inspection terminals	Inspection conditions	Standard value
A54-1 - A54-2	IG ON	11 to 14V

Captions in illustration

*a	Front side of vehicle wiring harness connector (neutral position switch connector)

NG → Go to Step 4.

OK

3	Neutral position switch unit inspection

(1) Perform unit inspection of the neutral position switch. (Refer to MT - 9)

NG → Replacement of neutral position switch (Refer to MT - 8)

OK

Inspection for problems that do not normally occur (Refer to ES - 28)

4	Check wiring harness and connector (neutral position switch - engine control computer - chassis ground)

NOTE:
Refer to IN - 36for inspection procedure and precautions of wiring harness and connector.
(1) Disconnect the connector for the engine control computer.
(2) Disconnect the connector of neutral position switch.
(3) Measure the resistance between the terminals. (For terminal arrangement, refer to ES - 36.)

ES

Resistance (open circuit check)

Inspection terminals	Inspection conditions	Standard value
A33-16 (NSW) - A54-2	Always	Less than 1 Ω
A33-4 (EC) - A54-1	Always	Less than 1 Ω

Resistance (short circuit check)

Inspection terminals	Inspection conditions	Standard value
A33-16 (NSW) and A54-2 - other terminals and chassis ground	Always	10 k Ωor more
A33-4 (EC) and A54-1 - other terminals and chassis ground	Always	10 k Ωor more

NG → Repair or replacement of wiring harness or connector

OK

Replacement of the engine control computer (Refer to ES - 670)

5	Check wiring harness and connector (neutral start switch ASSY power supply voltage)

NOTE:
Refer to IN - 36for inspection procedure and precautions of wiring harness and connector.

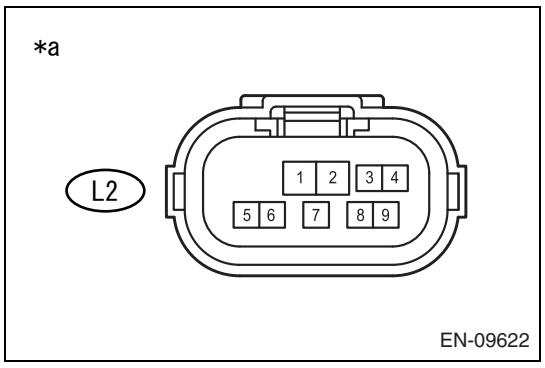

(1) Disconnect the connector for neutral start switch ASSY.
(2) Measure the voltage between the terminals.
Voltage

Inspection terminals	Inspection conditions	Standard value
L2-4 - L2-5	IG ON	11 to 14V

Captions in illustration

*a	Front side of vehicle wiring harness connector (neutral start switch ASSY connector)

NG → Go to Step 7.

OK

6	Perform a unit inspection of neutral start switch ASSY

(1) Check the neutral start switch ASSY as a single part. (Refer to AT - 190)

NG → Replacement of neutral start switch ASSY (Refer to AT - 190)

OK

Inspection for problems that do not normally occur (Refer to ES - 28)

7	Check wiring harness and connector (neutral start switch ASSY - engine control computer - chassis ground)

NOTE:
Refer to IN - 36for inspection procedure and precautions of wiring harness and connector.
(1) Disconnect the connector for the engine control computer.
(2) Disconnect the connector for neutral start switch ASSY.
(3) Measure the resistance between the terminals. (For terminal arrangement, refer to ES - 36.)

Resistance (open circuit check)

Inspection terminals	Inspection conditions	Standard value
A33-16 (NSW) - L2-4	Always	Less than 1 Ω
L2-5 - chassis ground	Always	Less than 1 Ω

Resistance (short circuit check)

Inspection terminals	Inspection conditions	Standard value
A33-16 (NSW) and L2-4 - other terminals and chassis ground	Always	10 k Ωor more

NG → Repair or replacement of wiring harness or connector

OK

Replacement of the engine control computer (Refer to ES - 670)

DTC	P1109	Detected Throttle Deposit

DTC	P2109	Throttle angle sensor Closed position error

Circuit description
Idle speed is controlled by the electronic throttle control system.
The electronic throttle control system consists of the throttle motor that drives the throttle valve and the throttle position sensor that detects the throttle valve opening angle.
The engine control computer controls the throttle valve opening angle with the throttle motor so that idle speed is maintained in the target value.

DTC No.	DTC detection conditions	Suspected parts
P1109	The maximum learning amount of the ISC learning value is 95 % or more and the deposit amount of 50 % or more is detected for 10 seconds. (5 trips detection logic)	Throttle body
P2109	When any of the following conditions is met (1 trip detection logic): • The opening angle of the throttle position sensor learned at the fully closed position is less than 9.975° or 20.025° or more. • When the throttle actuator electric current is turned off, the difference between the actual throttle opening angle and the fully closed position angle is less than 1.162°.	

MONITOR DESCRIPTION

Deposit on the throttle valve increases ISC flow and may cause conditions including engine stall and rough idling. To prevent this, the ISC flow required for idling is maintained by using the ISC learning value and feedback to the engine control computer. When the ISC learning value reaches the limit, the ECM records this DTC.

Monitor strategy

Related DTCs	P2109: Throttle position sensor minimum stop rationality check
Required Sensors/Components (Main)	Throttle position sensor
Required Sensors/Components (Related)	-
Frequency of Operation	Continuous
Duration	0.008 seconds: case 1 0.08 seconds: case 2
MIL Operation	Immediately after
Sequence of Operation	None

TYPICAL ENABLING CONDITIONS

Overlap prohibited DTC	None
Battery Voltage	6V or more

TYPICAL MALFUNCTION THRESHOLDS

Case 1

The minimum throttle opening angle with the engine stopped	Less than -4.02 % (0.399 V) or more than 4.02 % (0.801 V)

Case 2

Throttle opening angle - minimum stop angle for throttle opening when IG SW OFF →ON	Less than 0.93% (0.05V)

Description of functions

Test drive

Perform test drive to check if the DTC recurs.

1. Connect the SSM4 to the DLC3.
2. Turn the ignition switch to ON.
3. Turn on the SSM4.
4. Follow the SSM4 on-screen instructions to clear the DTCs. (Refer to ES - 28)
5. Turn the ignition switch to OFF, and wait for 30 seconds.
6. Turn the ignition switch to ON.
7. Turn on the SSM4.

8. Start the engine.
   NOTE:
   If the engine cannot be started, crank the engine for 10 seconds or more.
9. Idle the engine for 20 seconds or more.
10. Follow the SSM4 on-screen instructions to check the DTC. (Refer to ES - 28)

Inspection steps
CAUTION:
Never try to clean the throttle body ASSY (with motor).

ES

1	Read DTC

(1) Connect the SSM4 to the DLC3.
(2) Turn the ignition switch to ON.
(3) Turn on the SSM4.
(4) Follow the SSM4 on-screen instructions to check the DTC. (Refer to ES - 28)

Result

Result	Go to
P1109 or P2109 is output.	A
Either P1109 or P2109, and other DTCs are output.	B

B → To corresponding DTC chart (refer to ES - 12)

A

Replacement of throttle body ASSY (with motor) (Refer to ES - 666)

DTC	P1160	Return Spring Failure

DTC	P2119	Throttle Control Circuit Range/Performance Problem

Circuit description
The electronic throttle control system consists of the throttle motor, throttle position sensor, accelerator pedal sensor ASSY, and the engine control computer. The engine control computer controls the throttle valve via the throttle motor. The throttle valve opening angle is identified by the throttle position sensor on the throttle body ASSY (with motor), and the data is fed back to the engine control computer.

DTC No.	DTC detection conditions	Suspected parts
P1160	After the throttle valve opens at 40°, the opening angle change after turning off the throttle actuator is less than 2°. (1 trips detection logic)	Throttle body
P2119	The throttle valve opening angle differs greatly from the target angle. (1 trips detection logic)	• Electronic throttle control system • Wiring harness or connector • ECM

MONITOR DESCRIPTION
P1160
When the ECM shuts off the power supply to the throttle actuator, the throttle valve is pulled by the return spring and returns to the fully closed position. If the throttle valve does not return to the fully closed position when the ETCS relay is off, the ECM judges this condition as carbon buildup on the throttle valve, then turns on the MIL and records the DTC.

P2119

The ECM calculates the actual throttle valve opening angle based on the signal received from the throttle position sensor. The actual opening angle is to be compared with the target opening angle specified by the ECM. When the difference between these two values is not within the range of the specification, the ECM will judge that there is a problem in the electronic control throttle system. Then ECM turns on the MIL and records the DTC.

Monitor strategy

Related DTCs	P1160: Throttle return spring functional check P2119: Throttle actuator control functional check
Required Sensors/Components (Main)	Throttle actuator (throttle body)
Required Sensors/Components (Related)	-
Frequency of Operation	Continuous
Duration	Immediately after: P1160 Varies depending on engine speed - refer to "Map1": P2119 (case 1) 5 seconds or less (varies depending on the conditions - refer to "Map2"): P2119 (case 2)
MIL Operation	Immediately after
Sequence of Operation	None

Map1

Engine speed	Less than 500 r/min	500 RPM or more
Time (sec)	5	2

Map2

Engine speed	Less than 500 r/min	500 RPM or more						
Actual throttle position (%)	N/A	Less than target throttle position	Target throttle position or more					
			0	6.44	7.6	11.6	18.8	100
Time (sec)	5	1	1	1	0.4	0.304	0.248	0.248

TYPICAL ENABLING CONDITIONS

All

Overlap prohibited DTC	None

P1160

Ignition switch	OFF
Time after the ignition switch is turned to OFF	1.6 seconds
Battery Voltage	6V or more

P2119 (case 1)

Battery Voltage	6 V or more
ETCS relay	ON

P2119 (case 2)

Battery Voltage	6 V or more
ETCS relay	ON

TYPICAL MALFUNCTION THRESHOLDS

P1160

Throttle position sensor 1 at the beginning of the diagnosis - throttle position sensor 1	Less than 1.6%

P2119 (case 1)

Throttle motor control duty	95% or more

P2119 (case 2)

|Target throttle opening angle - throttle position sensor 1|	3.72 % or more (varies depending on the throttle opening angle - refer to "Map3")

Map3

Target throttle position (%)	0	5.532	9.252	12.628	17.028	23.972	100
Threshold (%)	3.72	3.72	3.38	4.40	6.94	20.00	20.00

Description of functions

Test drive

Perform test drive to check if the DTC recurs.

1. Connect the SSM4 to the DLC3.
2. Turn the ignition switch to ON.
3. Turn on the SSM4.
4. Follow the SSM4 on-screen instructions to clear the DTCs. (Refer to ES - 28)
5. Turn the ignition switch to OFF, and wait for 30 seconds.
6. Turn the ignition switch to ON.
7. Turn on the SSM4.
8. Start the engine.
   NOTE:
   If the engine cannot be started, crank the engine for 10 seconds or more.
9. Idle the engine for 20 seconds or more.
10. Follow the SSM4 on-screen instructions to check the DTC. (Refer to ES - 28)

Inspection steps

NOTE:

- Read the freeze frame data using the SSM4. A part of the engine running conditions under which the engine trouble occurred is recorded in the freeze frame data, which is useful for troubleshooting.
- In [Data monitor] / [Active Test], check [Throttle sensor No1 Voltage], [Throttle Motor Duty (Open)], and [Throttle Motor Duty (Close)] data display items. (Refer to ES - 43)

1	Read DTC

(1) Connect the SSM4 to the DLC3.
(2) Turn the ignition switch to ON.
(3) Turn on the SSM4.
(4) Follow the SSM4 on-screen instructions to check the DTC. (Refer to ES - 28)

Result

Result	Go to
P1160 or P2119 is output.	A
Either 1160 or P2119, and other DTCs are output.	B

NOTE:
If any DTCs other than P1160, P2119 are output, troubleshoot them first.

B → To corresponding DTC chart (refer to ES - 12)

A

2	Clear DTC

(1) Connect the SSM4 to the DLC3.

(2) Turn the ignition switch to ON.
(3) Turn on the SSM4.
(4) Follow the SSM4 on-screen instructions to clear the DTCs. (Refer to ES - 28)
(5) Turn the ignition switch to OFF, and wait for 30 seconds.

Next

3	Reading of SSM4 data ([Throttle sensor No1 Voltage])

(1) Connect the SSM4 to the DLC3.
(2) Turn the ignition switch to ON.
(3) Turn on the SSM4.
(4) Select the following menu items using the SSM4. : [Each System] / [Engine Control System] / [Data monitor] / [Throttle sensor No1 Voltage], [Throttle Require Position]
(5) Read [Throttle sensor No1 Voltage] displayed on the SSM4 when the accelerator pedal is depressed to the floor and released immediately.

Result

Result	Go to
Value of the throttle sensor No. 1 voltage does not change.	A
Value of the throttle sensor No. 1 voltage changes.	B

NOTE:
When DTCs are output, the throttle valve is pulled by the return spring and returns to the predetermined opening angle due to the fail-safe mode. Therefore, if DTCs are output during this inspection, it is necessary to check the previous data.

B → Go to Step 5.

A

4	Throttle body ASSY (with motor) unit inspection

(1) Perform unit inspection of the throttle body ASSY (with motor). (Refer to ES - 668)

NG → Go to Step 9.

OK

5	Throttle body ASSY (with motor) check (visual and operational check of the throttle valve)

(1) Check for foreign materials in the area between the throttle valve and the housing.
(2) Make sure the throttle valve smoothly moves from the full open position to the full closed position.
Criteria: There is no foreign materials in the area between the throttle valve and the housing, and the throttle valve moves smoothly.

NG → Go to Step 9.

OK

6	Clear DTC

(1) Connect the SSM4 to the DLC3.
(2) Turn the ignition switch to ON.
(3) Turn on the SSM4.
(4) Follow the SSM4 on-screen instructions to clear the DTCs. (Refer to ES - 28)
(5) Turn the ignition switch to OFF, and wait for 30 seconds.

ES

Next

7	Reading of SSM4 data ([Throttle sensor No1 Voltage], [Throttle sensor No2 Voltage])

(1) Connect the SSM4 to the DLC3.
(2) Turn the ignition switch to ON.
(3) Turn on the SSM4.
(4) Select the following menu items using the SSM4. : [Each System] / [Engine Control System] / [Data monitor] / [Throttle sensor No1 Voltage], [Throttle sensor No2 Voltage]
(5) Wiggle the wiring harness to the engine control computer and check the SSM4 reading.
(6) Follow the SSM4 on-screen instructions to check the DTC. (Refer to ES - 28)

Result

Result	Go to
Wiggling harness causes the value shown in [Data monitor] to change or DTCs to be output.	A
Wiggling harness does not cause the value shown in [Data monitor] to change nor DTCs to be output.	B

B → Go to Step 11.

A

8	Repair or replacement of wiring harness and connector (throttle body ASSY (with motor) - engine control computer)

(1) Remove the connector and repair or replace it because the reading from [Data monitor] has changed or DTCs have been output due to a change in contact resistance of the connector.

Next

Complete

9	Replacement of throttle body ASSY (with motor)

(1) Replace the throttle body ASSY (with motor). (Refer to ES - 666)

Next

10	Clear DTC

(1) Connect the SSM4 to the DLC3.
(2) Turn the ignition switch to ON.
(3) Turn on the SSM4.
(4) Follow the SSM4 on-screen instructions to clear the DTCs. (Refer to ES - 28)
(5) Turn the ignition switch to OFF, and wait for 30 seconds.

ES

Next

11	Perform test drive for operation check

(1) Perform test drive. (Refer to "Test drive" under "Description of functions")
(2) Follow the SSM4 on-screen instructions to check the DTC. (Refer to ES - 28)

Result

Result	Go to
No DTC is output.	A
P1160 or P2119 is output.	B

B → Replacement of the engine control computer (Refer to ES - 670)

A

Complete

DTC	P119E	Air-Fuel Ratio Imbalance for Port Injection (Bank1 fluctuation engine speed)
DTC	P119F	Air-Fuel Ratio Imbalance for Direct Injection (Bank1 fluctuation engine speed)
DTC	P219A	Air-Fuel Ratio Imbalance (Bank 1)

Circuit description

- Refer to DTC P0300. (Refer to ES - 287)
- Refer to DTC P2195. (Refer to ES - 564)

DTC No.	DTC detection conditions	Faulty part
P119E P119F P219A	When any of the following conditions is met (2 trip detection logic): • The air/fuel ratio sensor signal varies during the air/fuel ratio feedback control. • The crank position sensor signal varies during the air/fuel ratio feedback control.	• Fuel injector ASSY • Intake system • Gas leakage from exhaust system • Ignition system • Compression pressure • Air / fuel ratio sensor • ECM

MONITOR DESCRIPTION

Fuel system air/fuel ratio cylinder unbalance observation

The ECM uses the air/fuel ratio sensor and crank position sensor to observe for variations in the air/fuel ratios inside the cylinders created by variations in the fuel injection volume due to problems or leaks in the cylinders or the intake/exhaust systems. If the cylinder air/fuel ratios become lean or rich compared to one another, the ECM determines there is a trouble symptom, and records a DTC.

Air/fuel ratio sensor observation method (A/F variation)

The system determines there is a trouble symptom if it detects an air/fuel ratio deviation between cylinders due to variation in the air/fuel ratio sensor output of 1 engine cycle (2 revolutions of the crank shaft).

If a malfunction is detected by crank position sensor observation method, DTC P219A alone is input.

Crank position sensor observation method (Speed variation)

The system observes variations in the engine speed, and if those variations become big, the system determines there is a deviation in the air/fuel ratio in the cylinders, in other words, a trouble symptom.

The diagnosis by crank position sensor observation method is performed at idling after warm-up.

Normally, at idling after warm-up, the injection control is set to "cylinder injection 100%".

If a malfunction is detected at this time, DTC P219A and P119F are input.

Also, the diagnosis with injection control setting forcibly to "port injection 100%" is performed in order to detect a port injection malfunction.

If a malfunction is detected at this time, DTC P219A and P119E are input.

After the diagnosis, the injection control setting returns to "cylinder injection 100%".

All of P219A, P119E and P119F could be input depending on the malfunction condition.

Monitor strategy

Related DTCs	P119E: Fuel system air fuel ratio cylinder imbalance for Port Injection P119F: Fuel system air fuel ratio cylinder imbalance for Direct Injection P219A: Fuel system air fuel ratio cylinder imbalance functional check
Required Sensors/Components (Main)	Air / fuel ratio sensor Crankshaft position sensor
Required Sensors/Components (Related)	Intake air flow meter SUB-ASSY E.F.I. water temperature sensor Vehicle speed sensor
Frequency of Operation	Once per driving cycle
Duration	200 revolutions: air/fuel ratio sensor observation method 400 revolutions: crank position sensor observation method
MIL Operation	2 operation cycle
Sequence of Operation	None

TYPICAL ENABLING CONDITIONS

All

Overlap prohibited DTC	P0010, P0020 (banks 1, 2 of the camshaft timing oil control valve) P0011, P0021 (banks 1, 2 of the VVT system- advancement) P0012, P0022 (banks 1, 2 of the VVT system- delay) P0013, P0023 (banks 1, 2 of the exhaust side camshaft timing oil control valve) P0014, P0024 (banks 1, 2 of the exhaust side VVT system-advancement) P0015, P0025 (banks 1, 2 of the exhaust side VVT system-delay) P0016, P0018 (banks 1, 2 of the VVT system - unbalance) P0017, P0019 (banks 1, 2 of the VVT system - unbalance) P0031, P0032, P0051, P0052, P101D, P103D (air/fuel ratio sensor heater) P0102, P0103 (intake air flow meter SUB-ASSY) P0115, P0117, P0118 (E.F.I. water temperature sensor) P0120, P0121, P0122, P0123, P0220, P0222, P0223, P2135 (throttle position sensor) P0125 (insufficient coolant temperature for the closed loop control) P0327, P0328, P0332, P0333 (knock control sensor) P0335 (crankshaft position sensor) P0340, P0342, P0343, P0345, P0347, P0348 (camshaft position sensor) P0351, P0352, P0353, P0354, P0355, P0356 (ignitor) P0365, P0367, P0368, P0390, P0392, P0393 (exhaust side camshaft position sensor) P0500 (speed sensor)

Air/fuel ratio sensor observation method (DTC P219A)

Elapsed time after starting the engine	30 seconds or more
Engine Speed	1600 to 3200 r/min
Duration time of condition where catalyst neutralization is neither being controlled nor is gradually changing	2 seconds or more
F/B operation condition	Closed loop
Intake per revolution	0.6 to 0.8 g/rev (varies depending on engine speed)
Fluctuation in intake amount during half engine cycle	Less than 0.005g/rev

Crank position sensor observation method (DTC P219A, P119E, P119F)

Engine	Idling
Engine Speed	500 r/min or more
Elapsed time after starting the engine	30 seconds or more
Engine coolant temperature	More than -6.7°C {19.9°F}
F/B operation condition	Closed loop
Condition where catalyst neutralization is neither being controlled nor is gradually changing	—

TYPICAL MALFUNCTION THRESHOLDS

Air/fuel ratio sensor observation method (DTC P219A)

When one of the following conditions is met.	A or B
A: Positive slope gradient for the air/fuel ratio sensor output	More than 0.001125 (varies depending on the engine speed and the air intake amount per revolution)
B: |Negative gradient average for the air/fuel ratio sensor output|	More than 0.000975 (varies depending on the engine speed and the air intake amount per revolution)

Crank position sensor observation method

DTC P219A, P119E

Average crankshaft speed change during port fuel injection	More than 25.7 r/min (transmission A/T) (varies depending on engine speed and N/D range) More than 13.9 r/min (transmission M/T) (varies depending on engine speed)

DTC P219A, P119F

Average crankshaft speed change during cylinder fuel injection	More than 21.5 r/min (transmission A/T) (varies depending on engine speed and N/D range) More than 11.9 r/min (transmission M/T) (varies depending on engine speed)

ES

Monitoring result

Refer to [Monitor Status Check] (Refer to ES - 24)

Circuit figure

- Refer to "DTC P0030". (Refer to ES - 131)
- Refer to "DTC P0335". (Refer to ES - 306)

Description of functions

Test drive

Perform test drive to check if the DTC recurs.

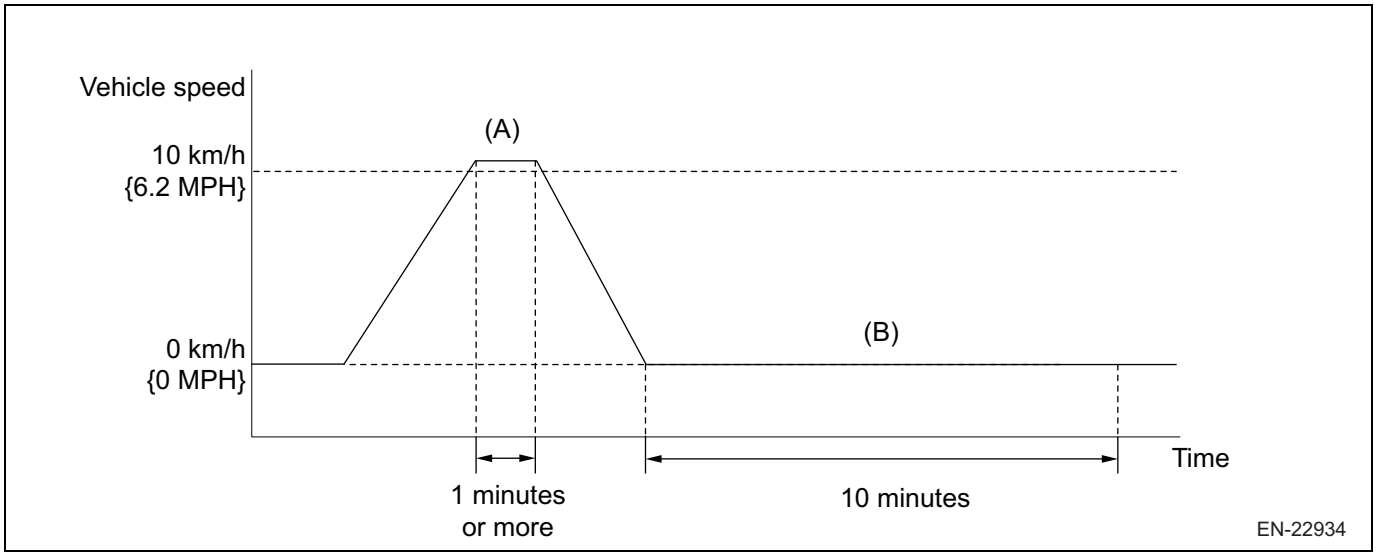

1. Connect the SSM4 to the DLC3.
2. Turn the ignition switch to ON.
3. Turn on the SSM4.
4. Follow the SSM4 on-screen instructions to clear the DTCs. (Refer to ES - 28)
5. Turn the ignition switch to OFF, and wait for 30 seconds.
6. Turn the ignition switch to ON.
7. Turn on the SSM4.
8. Start the engine.
9. Perform driving test as follows.
   WARNING:
   When performing this driving test, always observe the applicable traffic laws such as the speed limit.
   (a) Drive at 10 km/h {6.2 MPH} or more for 1 minute or more. (A)
   (b) Stop the vehicle.
   (c) Idle the engine for 10 minutes or more. (B)
10. Follow the SSM4 on-screen instructions to check the DTC. (Refer to ES - 28)

Inspection steps

NOTE:

Read the freeze frame data using the SSM4. A part of the engine running conditions under which the engine trouble occurred is recorded in the freeze frame data, which is useful for troubleshooting.

1	Read DTC

(1) Connect the SSM4 to the DLC3.
(2) Turn the ignition switch to ON.
(3) Turn on the SSM4.
(4) Follow the SSM4 on-screen instructions to check the DTC. (Refer to ES - 24)

Result

Result	Go to
P119E, P119F, or P219A is output.	A
DTCs other than P119E, P119F, or P219A are also output.	B

NOTE:

If any DTCs other than P119E, P119F, or P219A are output, trouble-shoot them first.

B → To corresponding DTC chart (refer to ES - 12)

A

2	Checking the freeze frame data

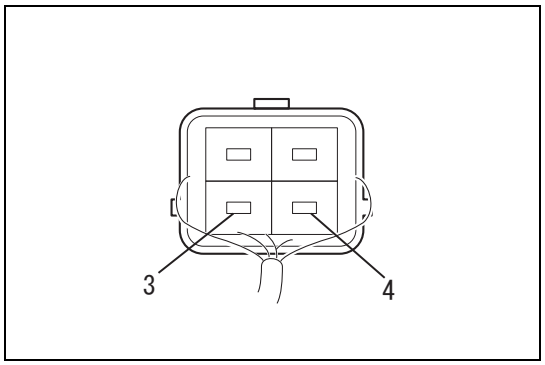

(1) Connect the SSM4 to the DLC3.
(2) Turn the ignition switch to ON.
(3) Using the SSM4, check the status of the vehicle at the time when the DTC was recorded, which is recorded in the freeze frame data. (Refer to ES - 28)

Freeze frame data entries for DTC P219A

- Vehicle speed
- Engine Speed
- Calculated load value
- [Idle switch (APS)]
- Short term fuel trim B1
- Long term fuel trim B1
- Misfire counter #1 to misfire counter #4

NOTE:

If the sum of [Short term fuel trim B1] of [Long term fuel trim B1] is a positive value, the fuel modulation is lean. If the sum is a negative value, it is rich.

DTCs recorded during idling	It can be concluded that trouble was detected because of the [System Too Lean] (which was detected by the speed variation of the crankshaft).
DTCs recorded during driving	It can be concluded that trouble was detected because of the [System Too Rich] (which was detected by the air/fuel ratio sensor)

Next

3	Active test (injection volume)

(1) Connect the SSM4 to the DLC3.
(2) Start the engine.
(3) Turn on the SSM4.
(4) Warm up the engine.
NOTE:
You must turn the A/C switch and all accessory switches to OFF, and put the shift lever in P, N, or neutral.
(5) Check the diagnostic codes using SSM4.
NOTE:
When you have selected the active test for "Injection Volume" (injection volume is 0%), if the misfire counts increase, proceed to step 6, "Intake system inspection".
(6) With the engine idling, run the [Cylinder Fuel Rate].
(7) Check the misfire counts (values for [Cylinder #1 Misfire Count] to [Cylinder #4 Misfire Count] of [Data monitor]) as you reduce the injection volume in increments of 5 %.

CAUTION:
Do not reduce the injection volume in increments of 20 % or more.

Result: Cylinders which did not increase their misfire count can be determined to have rich fuel modulation. Therefore, perform the inspection paying attention to those cylinders.

Next

4	Exhaust gas leakage check

(1) Make sure that exhaust gas is not leaking from connections of exhaust pipes and installation areas of sensors.
Criteria: There is no exhaust leakage.

NG → Repair of exhaust gas leakage

OK

5	Intake system inspection

(1) Inspect the intake system. (Refer to IE - 4)

NG → Repair or replacement of intake system

OK

6	Spark plug inspection

(1) Inspect the spark plug of cylinder causing the unbalance. (Refer to ES - 658)

NG → Replacement of the spark plug (Refer to ES - 687)

OK

7	Spark Inspection

(1) Perform the spark inspection. (Refer to ES - 652)
NOTE:
If no malfunction is found in the spark inspection, proceed to the next step.

Next

ES

8	Compression inspection

(1) Measure the compression of the misfiring cylinder. (Refer to EM - 2)

NG → Engine inspection to determine the cause of the low compression

OK

9	Inspection of the fuel injector ASSY (power source)

NG → See the fuel injector circuit (Refer to ES - 633)

OK

10	Inspection of wiring harnesses and connectors (fuel injector ASSY - ECM)

NG → Repair or replacement of wiring harness or connector

OK

11	Inspection of the fuel injector ASSY of the cylinder causing the unbalance.

(1) Inspect the injection of the fuel injector ASSY. (Amount of fuel and quality of the injection pattern) (Refer to FU - 29and FU - 39)

Output DTCs	Fuel injector ASSYs to be inspected
P219A only	For port injection and direct injection
P119E and P219A	For port injection
P119F and P219A	For direct injection
P119E, P119F, and P219A	For port injection and direct injection

NG → Replacement of the fuel injector ASSY (Refer to FU - 21and FU - 31)

OK

12	Inspection of cam clearance

CAUTION:
The inspection in this step is performed only when the DTC of the following three patterns are input.
- P119E, P219A

- P119F, P219A
- P119E, P119F, P219A

(If any DTCs other than P119E, P119F, or P219A are input in step 1, troubleshoot the DTC first.)

(1) Check the cam clearance. (Refer to EM - 9)

NG → Adjust the cam clearance.

OK

13	Checking the cause of the trouble symptom

(1) If you cannot determine the cause of the trouble symptom even if you perform troubleshooting procedures, perform the following inspection.
(2) Inspect the intake valve for precipitation buildup.
NOTE:
Because precipitation buildup on the intake valve may have caused the DTC to be recorded, remove the cylinder head, and inspect the intake valve.

Next

14	Perform test drive for operation check

(1) Connect the SSM4 to the DLC3.
(2) Turn the ignition switch to ON.
(3) Turn on the SSM4.
(4) Follow the SSM4 on-screen instructions to clear the DTCs. (Refer to ES - 28)
(5) Turn the ignition switch to OFF, and wait for 30 seconds.
(6) Turn the ignition switch to ON.
(7) Turn on the SSM4.
(8) Perform test drive. (Refer to "Test drive" under "Description of functions")
(9) Follow the SSM4 on-screen instructions to check the DTC. (Refer to ES - 28)
Criteria: P219A is not output.

Next

Complete

DTC	P1235	High-pressure fuel pump abnormal

Circuit description

The high pressure fuel pump is installed on the cylinder head cover with insulator, and driven by the cam on the intake side camshaft (bank 2). In this pump, a solenoid valve is used in the suction side, and a mechanical automatic valve is used in the discharge side. The suction side solenoid valve is duty cycled by the engine control computer to control the discharge rate.

DTC No.	DTC detection condition	Suspected parts
P1235	The diagnostic signal from the injector driver (EDU) does not change when the high pressure fuel pump is driven (open/short condition in the high pressure fuel pump circuit) (1 trips detection logic)	•Open or short condition in fuel pump (high pressure side) circuit •High pressure fuel pump •Injector driver (EDU) •ECM

Monitor strategy

ES

Related DTCs	P1235: High pressure fuel pump functional check
Required Sensors/Components (Main)	Fuel pump (high-pressure side)
Required Sensors/Components (Related)	Injector driver (EDU)
Frequency of Operation	Continuous
Duration	20 counts [time in seconds indicated in "Map1" (varies depending on engine speed)]
MIL Operation	Immediately after
Sequence of Operation	None

Map1

Engine speed (r/min)	500	2000	4000	6000
Time to reach 20 counts (sec)	1.60	0.40	0.20	0.13

TYPICAL ENABLING CONDITIONS

Overlap prohibited DTC	None
Battery Voltage	10.5V or more
Elapsed time after starting the engine	More than 5 seconds
Starter	OFF
Active crank angle of the high pressure fuel pump	More than the value indicated in Map2 (varies depending on engine speed) and less than 148°CA

Map2

Engine speed (r/min)	500	2000	4000	6000	8000
Crankshaft angle (°CA)	7	25	50	75	100

TYPICAL MALFUNCTION THRESHOLDS

High-pressure fuel pump output signal	No falling edge detected

Circuit figure

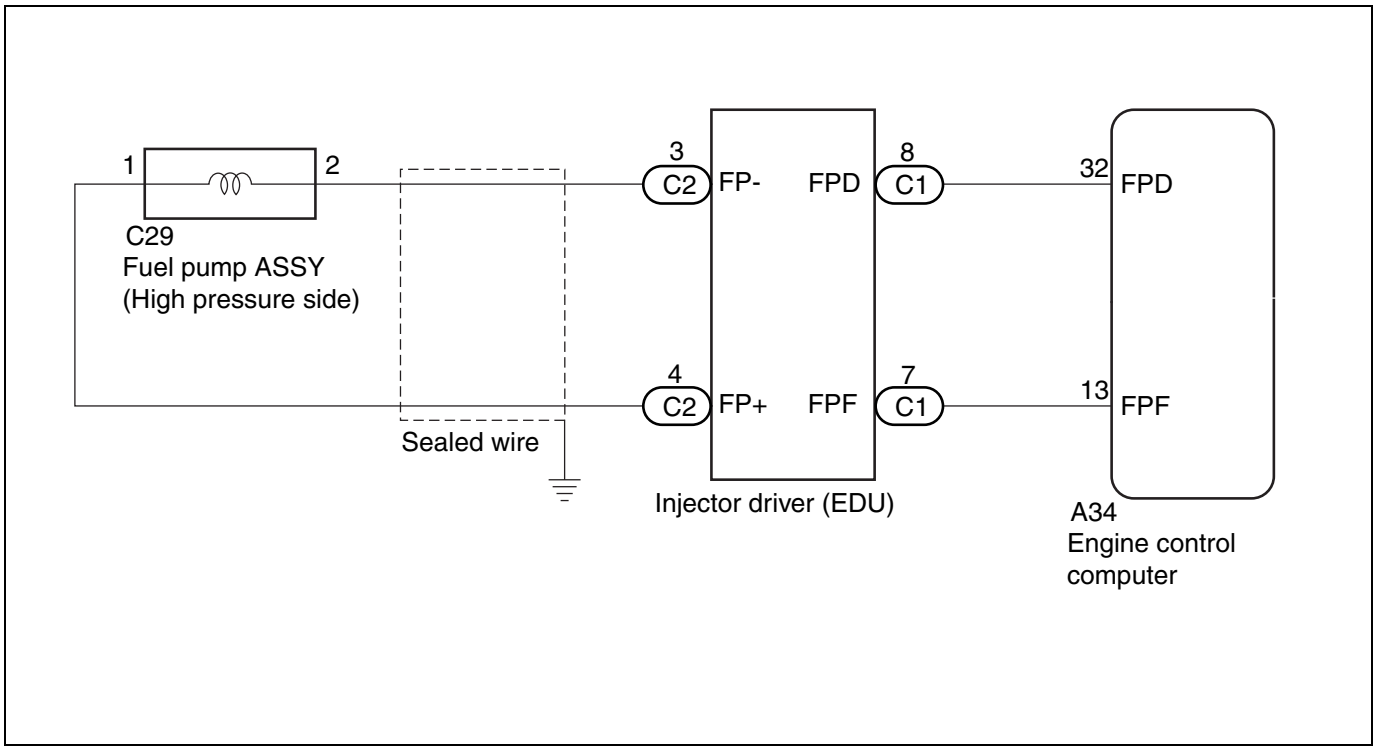

Description of functions

Test drive

Perform test drive to check if the DTC recurs.

1. Connect the SSM4 to the DLC3.
2. Turn the ignition switch to ON.
3. Turn on the SSM4.
4. Follow the SSM4 on-screen instructions to clear the DTCs. (Refer to ES - 28)
5. Turn the ignition switch to OFF, and wait for 30 seconds.
6. Turn the ignition switch to ON.
7. Turn on the SSM4.
8. Start the engine.
   NOTE:
   If the engine cannot be started, crank the engine for 10 seconds or more.
9. Idle the engine for 20 seconds or more.
10. Follow the SSM4 on-screen instructions to check the DTC. (Refer to ES - 28)

Inspection steps

NOTE:

Read the freeze frame data using the SSM4. A part of the engine running conditions under which the engine trouble occurred is recorded in the freeze frame data, which is useful for troubleshooting.

1	Fuel pump ASSY unit inspection (high-pressure side)

(1) Check the fuel pump ASSY (high-pressure side). (Refer to FU - 61)

NG → Replacement of fuel pump ASSY (Refer to FU - 58)

OK

2	Check wiring harness and connector (injector driver - fuel pump ASSY (high-pressure side))

NOTE:
For the inspection procedure and precautions for wiring harnesses and connectors, refer to IN - 36.
(1) Disconnect injector driver connectors.
(2) Disconnect the fuel pump ASSY (high-pressure side) connectors.
(3) Measure the resistance between the terminals.

ES

Resistance (open circuit check)

Inspection terminals	Inspection conditions	Standard value
C2-3 (FP-) - C29-2	Always	Less than 1 Ω
C2-4 (FP+) - C29-1	Always	Less than 1 Ω

Resistance (short circuit check)

Inspection terminals	Inspection conditions	Standard value
C2-3 (FP-) and C29-2 - other terminals and chassis ground	Always	10 k Ωor more
C2-4 (FP+) and C29-1 - other terminals and chassis ground	Always	10 k Ωor more

NG → Repair or replacement of wiring harness or connector

OK

3	Check wiring harness and connector (engine control computer - injector driver)

NOTE:
For the inspection procedure and precautions for wiring harnesses and connectors, refer to IN - 36.
(1) Disconnect the connector for the engine control computer.
(2) Disconnect injector driver connectors.
(3) Measure the resistance between the terminals. (For terminal arrangement, refer to ES - 36.)

Resistance (open circuit check)

Inspection terminals	Inspection conditions	Standard value
A34-32 (FPD) - C1-8 (FPD)	Always	Less than 1 Ω
A34-13 (FPF) - C1-7 (FPF)	Always	Less than 1 Ω

Resistance (short circuit check)

Inspection terminals	Inspection conditions	Standard value
A34-32 (FPD) and C1-8 (FPD) - other terminals and chassis ground	Always	10 k Ωor more
A34-13 (FPF) and C1-7 (FPF) - other terminals and chassis ground	Always	10 k Ωor more

NG → Repair or replacement of wiring harness or connector

OK

4	Engine control computer check (FPD output)

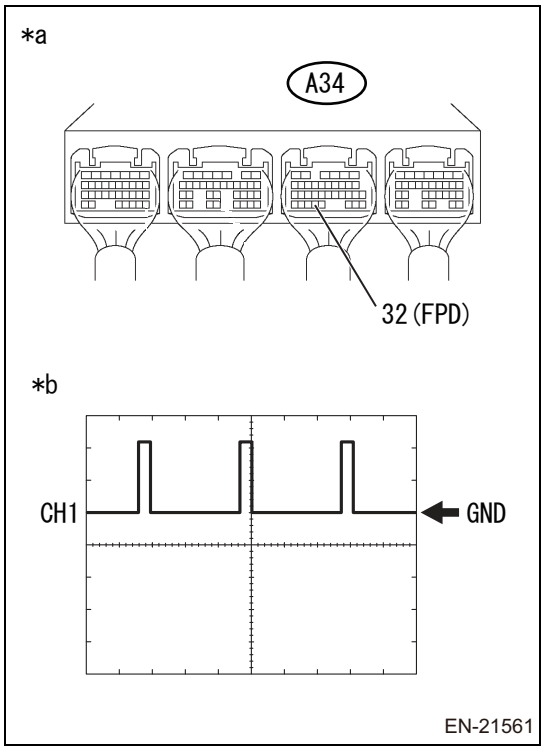

NOTE:
For the inspection procedure and precautions for wiring harnesses and connectors, refer to IN - 36.

(1) Using an oscilloscope, check the waveform. (For terminal arrangement, refer to ES - 36.)

Item	Contents
Measuring terminal	A34-32 (FPD) - chassis ground
Equipment setting	2 V/DIV, 20 ms/DIV
Measuring condition	During idling

Captions in illustration

*a	Connector connected (engine control computer)
*b	Normal waveform at FPD terminal

Criteria: Normal waveform is output.

NOTE:
If DTCs are output after the engine is started from IG OFF state, the fail-safe mode takes effect. Therefore the FPD waveform is output only immediately after start-up.

NG → Go to Step 6.

OK

5	Engine control computer check (FPF output)

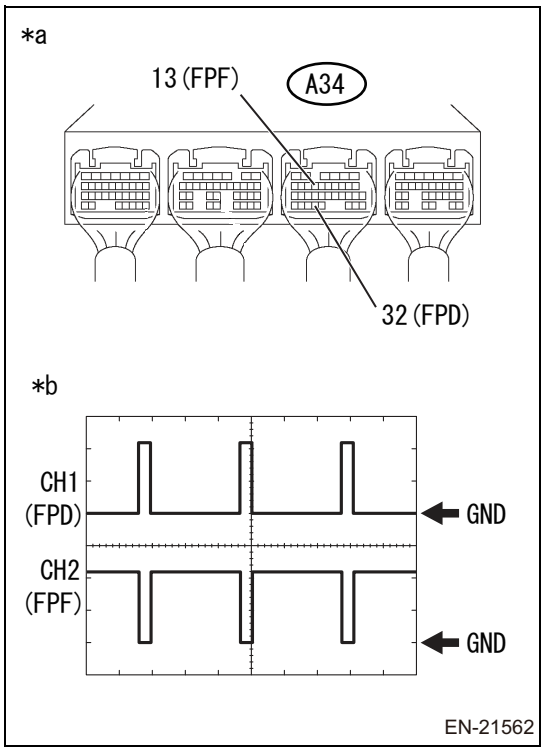

NOTE:
For the inspection procedure and precautions for wiring harnesses and connectors, refer to IN - 36.

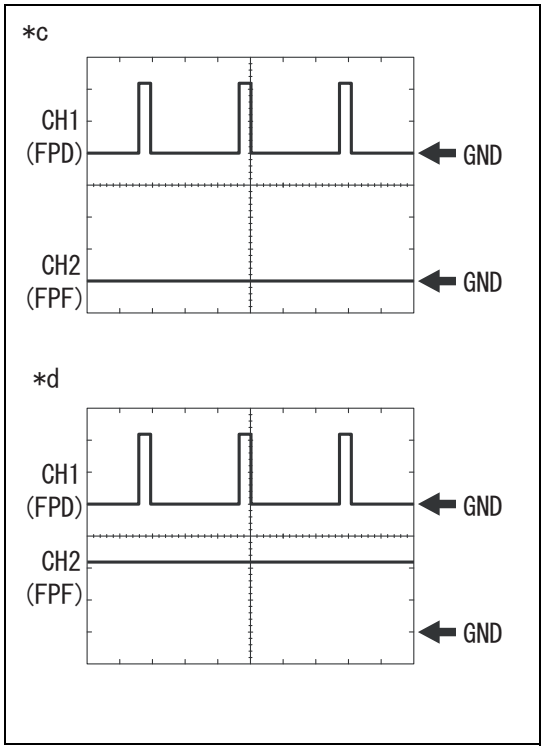

(1) Using an oscilloscope, check the waveform. (For terminal arrangement, refer to ES - 36.)

Captions in illustration

*a	Connector connected (engine control computer)
*b	Normal waveform at FPD and FPF terminals
*c	FPF waveform, NG waveform 1
*d	FPF waveform, NG waveform 2

Item	Contents
Measuring terminal	CH1: A34-32 (FPD) - chassis ground CH2: A34-13 (FPF) - chassis ground
Equipment setting	2 V/DIV, 20 ms/DIV
Measuring condition	During idling

(2) When FPF terminal waveform is NG waveform 1, stop the engine, disconnect the injector driver connectors, and check the change in FPF waveform during cranking.

Result

FPD waveform	FPF waveform	Check performed when NG waveform 1 results	Go to
OK	OK	-	A
OK	NG waveform 1	NG waveform 1 No change (FPF waveform does not change from GND when ignition is switched from OFF→ON)	A
		NG waveform 2 Change takes place (FPF waveform rises from GND when ignition is switched from OFF→ON)	B
OK	NG waveform 2	-	

B → Replacement of injector driver (Refer to FU - 43)

A → Replacement of the engine control computer (Refer to ES - 670)

6	Engine control computer check (FPD output)

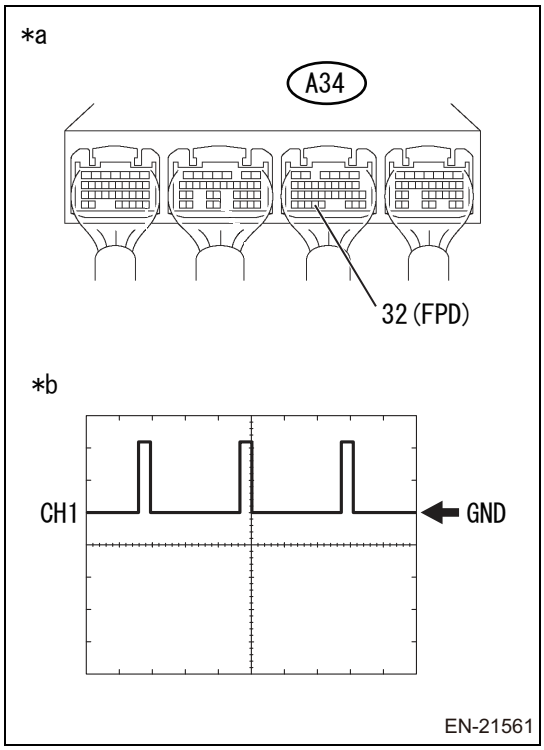

NOTE:
For the inspection procedure and precautions for wiring harnesses and connectors, refer to IN - 36.
(1) Disconnect injector driver connectors.
(2) Using an oscilloscope, check the waveform. (For terminal arrangement, refer to ES - 36.)

Captions in illustration

*a	Connector connected (engine control computer)
*b	Normal waveform at FPD terminal

Item	Contents
Measuring terminal	A34-32 (FPD) - chassis ground
Equipment setting	2 V/DIV, 20 ms/DIV
Measuring condition	When cranking

Result: Normal waveform is output.

NG → Replacement of the engine control computer (Refer to ES - 670)

OK → Replacement of injector driver (Refer to FU - 43)

DTC	P1449	Vent control filter clogging

Circuit description
Refer to "EVAP (EVAP emission) system" for details. (Refer to ES - 595)

DTC No.	Monitoring items	Error detection condition	Suspected parts	Detection timing	Detection logic
P1449	Canister filter clogging	Pressure inside the ELCM changes rapidly	• Clogging in the EVAP line (drain tube) • Clogging in the EVAP line (canister pump module - drain separator) • Clogging in the canister pump module (drain separator)	When the ignition switch is ON	2 trip

MONITOR DESCRIPTION
The ECM monitors the canister filter of the canister pump module. It checks the pressure every 5 seconds, and if the change in the pressure exceeds the threshold value, it will deactivate the EVAP system monitor. In this case, the ECM turns on the MIL and records the DTC. (2-trip detection logic)

Monitor strategy

Related DTCs	P1449: Evaporative Emission System Lid Open Switch Stuck ON
Required Sensors/Components (Main)	Purge VSV and canister pump module
Required Sensors/Components (Related)	Continuous
Duration	1 second
MIL Operation	2 operation cycle
Sequence of Operation	None

ES

TYPICAL ENABLING CONDITIONS

Overlap prohibited DTC	None
Battery Voltage	10.9V or more
Elapsed time after starting the engine	20 seconds or more
Evaporative leak check module vacuum pump	Control not in progress
Evaporative leak check module switching valve	OFF (open)

TYPICAL MALFUNCTION THRESHOLDS

|Pressure change in 5 seconds|	More than 1.21 kPa {9 mmHg, 0.4 inHg, 0.2 psi}

Monitoring result

Refer to [Monitor Status Check] (Refer to ES - 24)

Description of functions

Test drive

Perform test drive to check if the DTC recurs.

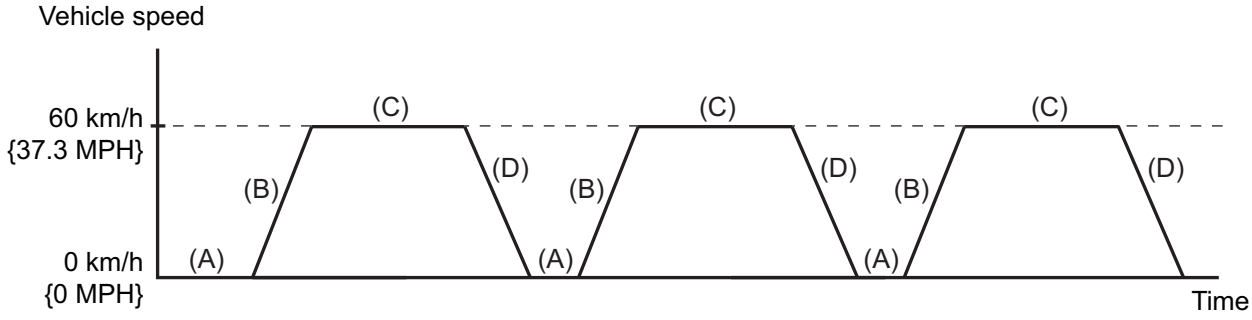

EN-23392

1. Connect the SSM4 to the DLC3.
2. Turn the ignition switch to ON.
3. Turn on the SSM4.
4. Follow the SSM4 on-screen instructions to clear the DTCs. (Refer to ES - 28)
5. Turn the ignition switch to OFF, and wait for 30 seconds.
6. Turn the ignition switch to ON.
7. Turn on the SSM4.
8. Start the engine.
9. Perform driving test as follows.

WARNING:
When performing this driving test, always observe the applicable traffic laws such as the speed limit.
(a) Idle the engine for 1 minute. (A)
(b) Accelerate to 60 km/h {37.3 MPH}. (Sudden acceleration not acceptable) (B)
(c) Drive at a constant speed for 3 minutes. (C)
(d) Decelerate and stop the vehicle. (D)
(e) Repeat steps (a) to (d) described above 3 times in total.

10. Follow the SSM4 on-screen instructions to check the DTCs. (Refer to ES - 28)

Inspection steps

1	EVAP hose check (drain tube C)

(1) Check the drain tube C for clogging.
Criteria: No clogging in the drain tube C.

NG → Go to Step 4.

OK

2	EVAP hose check (drain tube A, drain hose, and drain pipe)

(1) Check the drain tube A, drain hose, and drain pipe for clogging.
Criteria: No clogging in the drain tube A, drain hose, and drain pipe.

NG → Go to Step 5.

OK

3	Replacement of canister pump module

(1) Replace the canister pump module. (Refer to EC - 7)

Next → Go to Step 6.

4	EVAP hose replacement (drain tube C)

Next → Go to Step 6.

5	EVAP hose replacement (drain tube A, drain hose, or drain pipe)

Next → Go to Step 6.

6	EVAP system check

(1) Connect the SSM4 to the DLC3.
(2) Turn the ignition switch to ON.
(3) Turn on the SSM4.
(4) Follow the SSM4 on-screen instructions to clear the DTCs. (Refer to ES - 28)
(5) Turn the ignition switch to OFF, and wait for 30 seconds.
(6) Turn the ignition switch to ON.

(7) Turn on the SSM4.
(8) Select the following menu items using the SSM4. : [OBD System] / [Each System] / [ECM Engine Control] / [On-Board System Test] / [Evaporative System Leak Test]
(9) Click the [OK] button to start the evaporative system leak test.
(10) The display with the message "Conditions have been enabled to control this function. Turn the ignition switch off to terminate the test." will appear. In this display, wait for 30 minutes without clicking the [OK] button.
(11) When 30 minutes has passed after finishing step 9, click the [OK] button.
(12) Return to the [OBD Menu] display and select [On-board monitor test result].
(13) Check TID $C1 to $CA of MID $3C in [On-board monitor test result].

Result of on-board monitor test

Display	Details	Remarks
$0000 is stored in every Val.	The test condition fails to be met during evaporative system leak test, and the test has been cancelled.	Re-run the test after ensuring that the test conditions are met.
Any value is stored in every Val. and every Result shows OK.	The evaporative system leak test is completed successfully.	Use the SSM4 to read the temporary code with IG ON.
Any one of the results is NG	The evaporative system leak test is completed successfully but there is an error in the results.	Use the SSM4 to read the temporary code with IG ON.

(14) When the evaporative system leak test is completed successfully, read the temporary code with IG ON. When any DTC is recorded, troubleshoot the appropriate DTC.
NOTE:
Turning IG to OFF will clear the temporary codes.

Next

Complete

DTC	P1603	Engine Stall History

Circuit description
After engine startup, if the engine stops due to any other cause than the ignition switch operation, the DTC is output.
The conditions at the time the DTC was output can be checked from the freeze frame data using the SSM4. A part of the engine running conditions under which the engine trouble occurred is recorded in the freeze frame data, which is useful for troubleshooting.
It is necessary to check the fuel level before troubleshooting because engine stall due to running out of gas can also be detected.

DTC No.	DTC detection condition	Suspected parts
P1603	After completing the monitoring of a startup failure (P1604), the engine stops (the engine speed drops to 300 r/min or less) even if the ignition switch is not operated after the engine is started. (1 trips detection logic)	•There is no air leakage in the intake system. •Purge VSV •Brake booster •Intake air flow meter SUB-ASSY •E.F.I. water temperature sensor •Thermostat SUB-ASSY •Power supply circuit (purge VSV, air/fuel ratio sensor, fuel injector ASSY, ignition coil ASSY) •Fuel pump (low-pressure side) •Fuel pump control circuit (low-pressure side) •Fuel line •PCV valve and hose •Camshaft timing oil control valve •Knock control sensor •Ignition system •Air conditioner system •Power steering system •Electric load signal system •Charging system •A/T system •Neutral start switch •ECM •Wiring harness or connector •Engine immobilizer system

Circuit figure

Refer to DTC P0011. (Refer to ES - 87)
Refer to DTC P0014. (Refer to ES - 101)
Refer to DTC P0030. (Refer to ES - 134)
Refer to DTC P0102. (Refer to ES - 169)
Refer to DTC P0117. (Refer to ES - 189)
Refer to DTC P0201. (Refer to ES - 279)
Refer to DTC P0458. (Refer to ES - 366)

Inspection steps

NOTE:

- DTC P1603 is different from existing diagnosis for parts, circuits, or system failure. When customer complains about situations such as "engine stalls" and "engine does not start", trouble phenomenon and freeze frame data will be evaluated to identify possible failure parts. DTCs may be output and detected due to operation done by the user. Therefore, unless there are customer complaints, do not perform diagnosis work but clear the codes and return the vehicle to the customer even if DTCs are present.
- If any other DTCs are present, troubleshoot the appropriate DTCs first.
- If the result of interview shows conditions at the time the trouble occurs (how engine stopped or restarted), refer to them.

Symptoms	Possible faulty parts
Engine vibrates and stops	Abnormal air/fuel ratio
Engine does not vibrate when stops	Trouble in ignition system, stopped injection, external overload
Rough idling after startup	Abnormal air/fuel ratio

- Read the freeze frame data using the SSM4. A part of the engine running conditions under which the engine trouble occurred is recorded in the freeze frame data, which is useful for troubleshooting.
- To check time-line freeze frame data, check 5 data. (Refer to ES - 28)
- If there are more than one items that are applicable to cause of trouble when time-line freeze frame data is checked, perform diagnosis procedure for all the applicable items.

- Drive and stop the vehicle to reproduce the conditions that are closest to those occurred at the time the trouble took place, as recorded in the freeze frame data. Then, check the data and the one obtained during idling (after warm-up, no-load condition with gear in D and N positions), and compare them with the freeze frame data.
- Focus on looking over sign and conditions at the time the trouble took place because the conditions may not recur.
- Wiggle the appropriate wiring harness and connectors to identify trouble that may not occur constantly for a more accurate check.

Workflow: First check the conditions when trouble occurred (shown in freeze frame data) and narrow down the check positions.

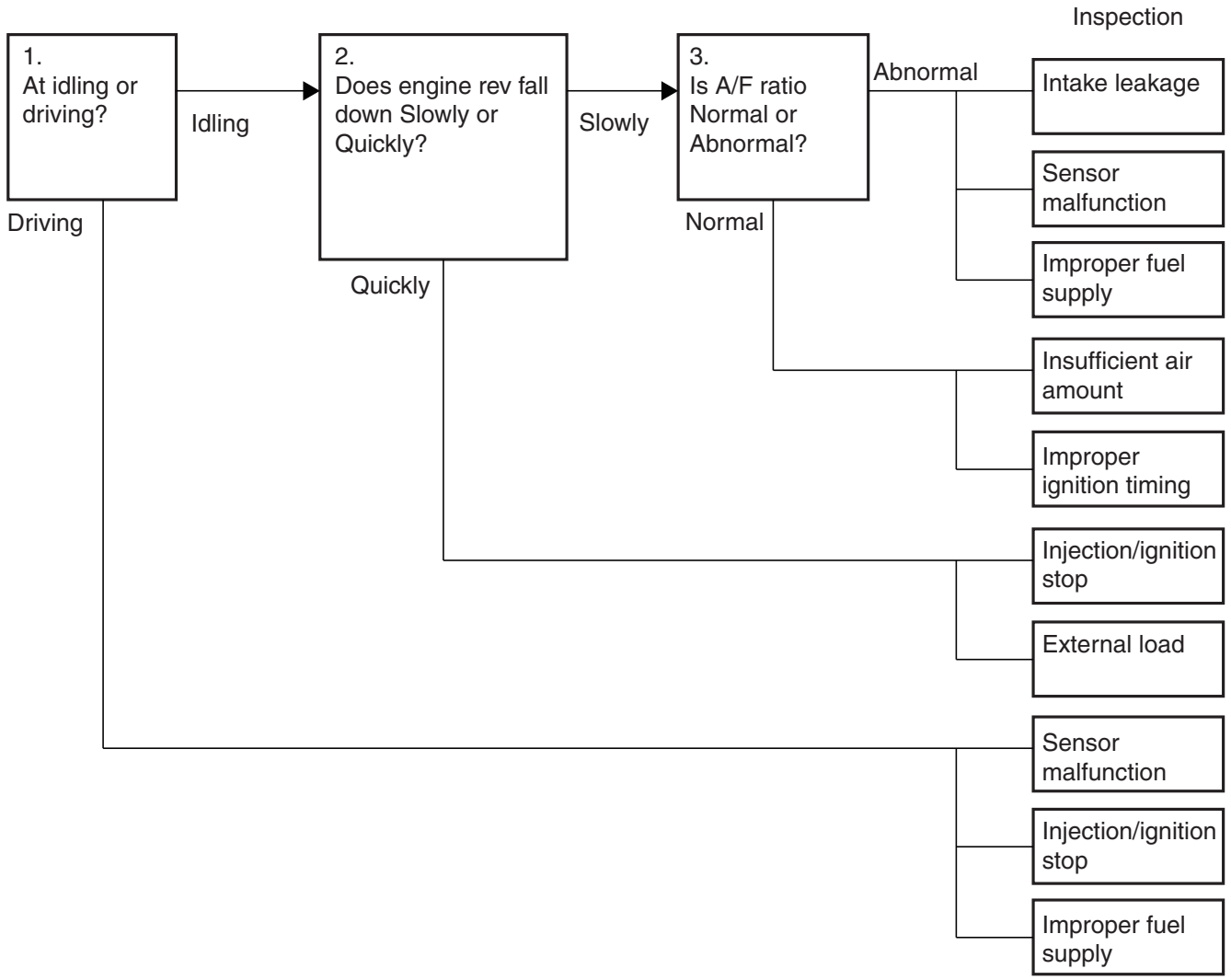

1 • When the intake air amount is small (at idling, decelerating), there may be reduction of torque caused by improper air-fuel ratio etc.
• When the intake air amount is large (at driving, accelerating), there may be a grave trouble such that no torque can be obtained because of total miss fire with ignition stop or fuel injection stop etc.

2 • When the engine revolution falls down slowly, there may be reduction of torque caused by misproportional air-fuel ratio (approx. 20 to 30%).
• When the engine revolution falls down quickly, there may be external load increased by malfunctions of nearly-total miss fire with ignition stop or fuel injection stop etc (more than 30% of A/F ratio misproportion), and increased by malfunctions of external parts.

3 • When abnormal air-fuel ratio is found, there may be intake leakage, sensor malfunction or insufficient fuel supply.
• When normal, there may be insufficient air amount or improper ignition timing.

ES

Driving condition	Engine Speed	Possible cause		Main inspection parts	Step
During idling or deceleration	Slowly decreases and engine stalls	Ignition system failure	Igniter failure	• Power supply circuit • Ignition coil ASSY • Spark plug	10, 38, 52
		Abnormal air/fuel ratio	Air induction	• Intake system connections • Vacuum switching valve ASSY system • Brake booster ASSY	5 to 9
			Sensor failure (misjudged as lean side)	• Intake air flow meter SUB-ASSY • E.F.I. water temperature sensor • Air/fuel ratio sensor system • Thermostat	11 to 23
			Sensor failure (misjudged as rich side)		39 to 51
			Fuel supply failure	• Fuel pump control system (low-pressure side) • Vacuum switching valve ASSY system • Fuel line • Engine control computer	24 to 37
		Intake air failure	Air passage failure	• Intake system connections • Intake air flow meter SUB-ASSY • Brake booster ASSY • PCV system • Vacuum switching valve system	53 to 55
			Excessive valve overlap	• Camshaft timing oil control valve ASSY	56 to 59
		Ignition timing out of range	Timing deviates from the target	• Knock control sensor • E.F.I. water temperature sensor • Intake air flow meter SUB-ASSY	60 to 64
	Abruptly drops and engine stalls*	Ignition/injection stop (failure in power supply system)	Temporarily shut off	• Power supply circuit (fuel injector ASSY (port injection side), ignition coil ASSY)	65, 66
		External parts failure	Increase in load	• Air conditioner system • Electric load signal system • Power steering system • Automatic transmission system • Neutral start switch ASSY system	67 to 69
At startup or acceleration	-	Crankshaft position sensor, camshaft position sensor failure	Temporarily shut off	• Check DTC	1
		Intake air flow meter SUB-ASSY	Covered with foreign materials	• Intake air flow meter SUB-ASSY	70 to 73
		Ignition/injection stop (failure in power supply system)	Temporarily shut off	• Power supply circuit (fuel injector ASSY (port injection side), ignition coil ASSY)	74, 75
		Fuel supply failure	Fuel leakage, clogging	• Fuel pump control system (low-pressure side) • Fuel line (low-pressure side)	76 to 80

* If the engine stalls immediately after the injection method has changed from port injection to direct injection, the injector driver may be faulty.

NOTE:

- Bank 1 shows the side where No. 1 cylinder is located.
- Bank 2 shows the side where No. 2 cylinder is located.

1	Read DTC

(1) Connect the SSM4 to the DLC3.
(2) Turn the ignition switch to ON.
(3) Follow the SSM4 on-screen instructions to check the DTC. (Refer to ES - 28)

Result

Result	Go to
Only P1603 is output.	A
DTCs other than P1603 are also output	B

NOTE:
If any DTCs other than P1603 are output, troubleshoot them first.

B → To corresponding DTC chart (refer to ES - 12)

A

2	Freeze frame data check (immobilizer fuel cut state)

(1) Connect the SSM4 to the DLC3.
(2) Turn the ignition switch to ON.
(3) Follow the SSM4 on-screen instructions and use time-line freeze frame data to check vehicle conditions at the time the DTCs are detected. (Refer to ES - 28)

Criteria

Item	Criteria
Immobilizer fuel cut state	OFF

Result

Result	Go to
Malfunction	A
Normal	B

B → Go to Step 4.

A

3	Immobilizer operation check

(1) Connect the SSM4 to the DLC3.
(2) Start the engine.
(3) Idle the engine.
(4) Select the following menu items using the SSM4. : [Each System] / [Engine Control System] / [Data monitor] / [Immobilizer Fuel Cut]
(5) Read the [Immobilizer Fuel Cut] displayed on the SSM4.

Criteria

Item	Criteria
[Immobilizer Fuel Cut]	OFF

NOTE:
If the engine cannot be started, read the data monitor during cranking.

Result

Result	Go to
Normal	A
Malfunction (models with smart entry & start system)	B
Malfunction (models without smart entry & start system)	C

ES

B → Engine immobilizer system check (models with smart entry & start system) (Refer to TD - 237)

C → Engine immobilizer system check (models without smart entry & start system) (Refer to TD - 277)

A

4	Freeze frame data check (Idle Switch, Engine Speed, Short term fuel trim B1, Long term fuel trim B1)

(1) Connect the SSM4 to the DLC3.
(2) Turn the ignition switch to ON.
(3) Follow the SSM4 on-screen instructions and use time-line freeze frame data to check vehicle conditions at the time the DTCs are detected. (Refer to ES - 28)

Result

Trouble phenomenon	Time-line freeze frame data item			Possible cause	Go to
	[Idle Switch]	[Engine Speed]	Sum of [Short term fuel trim B1] and [Long term fuel trim B1]		
Engine speed slowly decreases and then engine stalls during idling or deceleration	All cases are ON	Slowly decreases (*1)	All cases are +15 % or more (*2)	• Air induction • Sensor failure (misjudged as lean side) • Fuel supply failure	A
			At least one case is -15 % or less (*3)	• Sensor failure (misjudged as rich side)	B
			All cases are from -15 % to +15 %	• Insufficient air induction • Ignition timing out of range	C
Engine speed abruptly decreases and then engine stalls during idling or deceleration		Abruptly decreases (*1)	-	• Injection stop, ignition stop • External load	D

Trouble phenomenon	Time-line freeze frame data item			Possible cause	Go to
	[Idle Switch]	[Engine Speed]	Sum of [Short term fuel trim B1] and [Long term fuel trim B1]		
Engine stall during startup, acceleration, cruising	At least one case is OFF	-	-	• Sensor failure • Injection/ignition stop • Fuel supply failure	E

ES

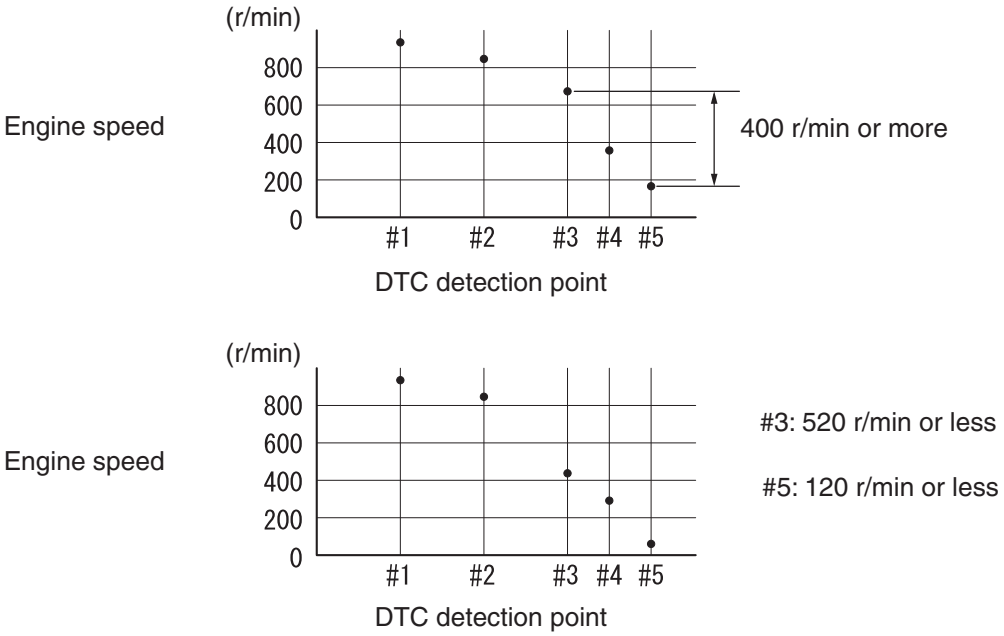

C

NOTE:

- *1: Power supply system failure in common wiring harness to the all cylinders or multiple cylinders, increase in external load, injector driver failure (immediately after the injection method has changed from port injection to direct injection) etc. may be the possible causes of the abrupt drop in engine speed. When one of the followings is applicable, engine speed has abruptly dropped.
  In other cases, an engine speed drop is slow.
  (a) In the freeze frame data, the amount of engine speed drop between #3 and #5 is 400 r/min or more.
  (b) In the freeze frame data, the engine speed is 520 r/min or less at #3 and 120 r/min or less at #5.
- Perform AT check when the vehicle speed is 30km/h {19 MPH} or less and the difference between the engine speed and turbine speed is 100 r/min or less. (When lock-up release is delayed, both an abrupt drop and a slow drop of the engine speed may be considered depending on the deceleration rate.)
- *2: When DTCs are detected, F/B is corrected to positive due to a lean state.
- *3: When DTCs are detected, F/B is corrected to negative due to a rich state.

B → Go to Step 38.

C → Go to Step 52.

D → Go to Step 65.

E → Go to Step 70.

A

ES

5	Intake system check (connection)

(1) Make sure there is no air leakage (from disconnected hoses, cracks, gaskets) at each part of the intake system. (Refer to IE - 4)
NOTE:
- Present of air leakage can be easily checked by racing the engine then releasing the accelerator pedal completely because this creates high vacuum that leads to large air induction noise.
- Air may be leaking (sucked in) if F/B correction value and F/B learning value show a larger difference between idling time (smaller mass air flow) and the normal time, and a smaller difference between racing time (larger mass air flow) and the normal time.
  Criteria: Air induction is not present.

NG → Repair or replacement of intake system (connection)

OK

6	Vacuum switching valve ASSY check

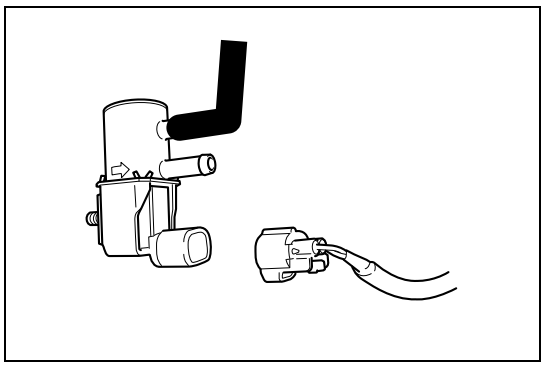

(1) Disconnect the vacuum hose (canister side) of the vacuum switching valve ASSY.
(2) Start the engine.
(3) Idle the engine.
(4) Disconnect the vacuum switching valve ASSY connector.
(5) Check air vent of the vacuum switching valve ASSY.
  Criteria: No air vent

NOTE:
Performing this check may illuminate the MIL. Once the work is done, check and clear the codes. (Refer to ES - 28)

NG → Replacement of vacuum switching valve ASSY (Refer to EC - 16)

OK

7	Freeze frame data check ([Stop Light Switch])

(1) Connect the SSM4 to the DLC3.
(2) Turn the ignition switch to ON.
(3) Follow the SSM4 on-screen instructions and use time-line freeze frame data to check vehicle conditions at the time the DTCs are detected. (Refer to ES - 28)

Result

Time-line freeze frame data item	Result	Possible cause	Go to
[Stop Light Switch]	At least 1 case is ON	Air being sucked in from brake booster ASSY	A
	All cases are OFF	-	B

B → Go to Step 10.

A

8	Reading of SSM4 data ([Short term fuel trim B1])

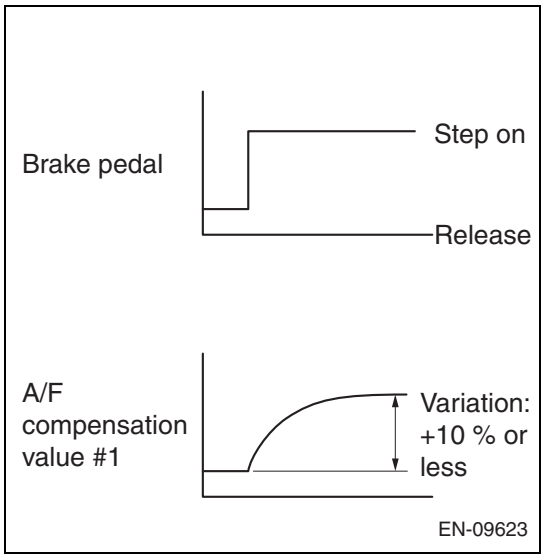

(1) Connect the SSM4 to the DLC3.
(2) Turn the ignition switch to ON.
(3) Start the engine, turn off all the accessory switches, and wait until the engine warms up and the coolant temperature stabilizes.
(4) Idle the engine.
(5) Select the following menu items using the SSM4. : [Each System] / [Engine Control System] / [Data monitor] / [Short term fuel trim B1]
(6) Read [Short term fuel trim B1] displayed on the SSM4 while keep depressing the brake pedal.
Standard value: Change in the value of [Short term fuel trim B1] is +10 % or less

NOTE:
When air is being sucked in, the air/fuel ratio is corrected toward the positive side because it is in a leaner state.

NG → Brake booster ASSY check (Refer to BR - 2)

OK

9	Perform test drive for operation check ([Short term fuel trim B1], [Long term fuel trim B1])

(1) Connect the SSM4 to the DLC3.
(2) Turn the ignition switch to ON.
(3) Start the engine, turn off all the accessory switches, and wait until the engine warms up and the coolant temperature stabilizes.
(4) Idle the engine.
(5) Select the following menu items using the SSM4. : [Each System] / [Engine Control System] / [Data monitor] / [Short term fuel trim B1], [Long term fuel trim B1]
(6) Check [Short term fuel trim B1] and [Long term fuel trim B1] displayed on the SSM4.

Standard value

Item	Inspection conditions	Standard value
Sum of [Short term fuel trim B1] and [Long term fuel trim B1]	Vehicle conditions when malfunction occurs (during idling, test drive, etc.)	Within ±15%

NG → Brake booster ASSY check (Refer to BR - 2)

OK

10	Ignition system inspection

(1) Perform on-board ignition system check. (Refer to ES - 652)

NG → Repair or replace the faulty parts.

OK

ES

11	Freeze frame data check ([Calculated load value], [A/F Sensor #11])

(1) Connect the SSM4 to the DLC3.
(2) Turn the ignition switch to ON.
(3) Follow the SSM4 on-screen instructions and use time-line freeze frame data to check vehicle conditions at the time the DTCs are detected. (Refer to ES - 28)

Result

Time-line freeze frame data item	Result	Possible cause	Go to
[Calculated load value]	Less than 90 % of the normal value (*1)	Intake air flow meter SUB-ASSY	A
[A/F Sensor #11]	2.2 V or more (*2)	• Air / fuel ratio sensor • Wiring harness or connector	B

NOTE:
*1: When malfunction occurs in the intake air flow meter SUB-ASSY, the result of the calculation for the mass air flow becomes less than the specification, smaller engine load value is displayed.
*2: When a malfunctioning air/fuel ratio sensor continuously outputs a lean value, the air/fuel ratio is corrected to the richer side and may cause the engine to stall.

B → Go to Step 15.

A

12	Inspection of intake air flow meter SUB-ASSY

(1) Remove the intake air flow meter SUB-ASSY.

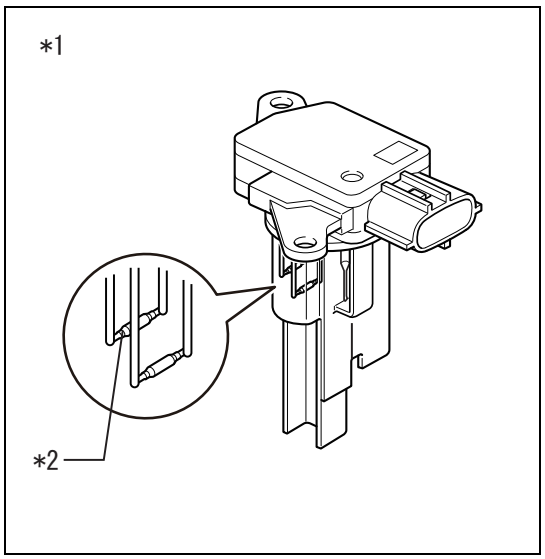

(2) The platinum filament (at heater area) in the flow duct of the intake air flow meter SUB-ASSY is free of foreign materials.

Result

Result	Go to
Visible foreign materials are present	A
Visible foreign materials are not present	B

Captions in illustration

*1	Intake air flow meter SUB-ASSY
*2	Platinum filament (heater)

B → Replacement of intake air flow meter SUB-ASSY (Refer to ES - 675)

A

13	Check wiring harness and connector (engine control computer - intake air flow meter SUB-ASSY)

NOTE:
For the inspection procedure and precautions for wiring harnesses and connectors, refer to IN - 36.

(1) Disconnect the connector for the engine control computer.
(2) Disconnect the connector of the intake air flow meter SUB-ASSY.
(3) Measure the resistance between the terminals. (For terminal arrangement, refer to ES - 36.)

ES

Resistance (open circuit check)

Inspection terminals	Inspection conditions	Standard value
A33-22 (VG) - C16-5 (VG)	Always	Less than 1 Ω
A33-29 (E2G) - C16-4 (E2G)	Always	Less than 1 Ω

Resistance (short circuit check)

Inspection terminals	Inspection conditions	Standard value
A33-22 (VG) and C16-5 (VG) - other terminals and chassis ground	Always	10 k Ωor more
A33-29 (E2G) and C16-4 (E2G) - other terminals and chassis ground	Always	10 k Ωor more

NOTE:
- Wiggle the wiring harness and connectors to identify trouble that may not occur constantly for a more accurate check.
- Make sure an excessive tension is not placed on the wiring harness.

NG → Repair or replacement of wiring harness or connector

OK

14	Perform test drive for operation check (Engine load value)

(1) Connect the SSM4 to the DLC3.
(2) Start the engine, turn off all the accessory switches, and wait until the engine warms up and the coolant temperature stabilizes. (at 75°C {167°F} or more).
(3) Idle the engine.
(4) Select the following menu items using the SSM4. : [Each System] / [Engine Control System] / [Data monitor] / [Calculated load value]
(5) Read the [Calculated load value] displayed on the SSM4.

Criteria

Item	Criteria
[Calculated load value]	90 to 110 % of the normal value

Result

Result	Go to
Malfunction	A
Normal	B

B → Go to Step 18.

A

Replacement of intake air flow meter SUB-ASSY (Refer to ES - 675)

15	Performing of SSM4 active test (injection volume)

ES

(1) Connect the SSM4 to the DLC3.
(2) Start the engine, turn off all the accessory switches, and wait until the engine warms up and the coolant temperature stabilizes. (at 80°C {176°F} or more).
(3) Run the engine at 2500 r/min for approximately 3 minutes to warm up each sensor.
(4) Select the following menu items using the SSM4. : [Each System] / [Engine Control System] / [Work Support] / [Active Test] / [Cylinder Fuel Rate]

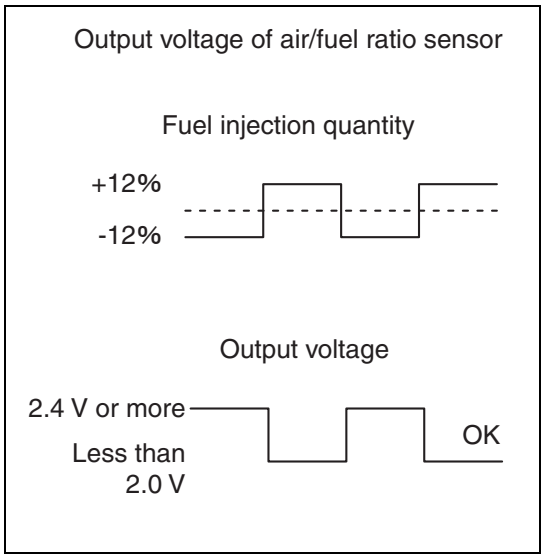

(5) Idle the engine, increase and decrease fuel injection amount, and read values of the air/fuel ratio sensor voltage [A/F Sensor #11].
Voltage

Tester item	Standard value
Fuel injection amount (+12%)	Output voltage of air/fuel ratio sensor is less than 2.0 V.
Fuel injection amount (-12 %)	Output voltage of air/fuel ratio sensor is 2.4 V or more.

CAUTION:
- Voltage output of the air/fuel ratio sensor delays a few seconds.
- Because the sensors become cold, measure the voltage promptly after warming up the sensors.

Result

Result	Go to
Malfunction	A
Normal	B

B → Go to Step 18.

A

16	Check wiring harness and connector (air/fuel ratio sensor power supply circuit)

NOTE:
For the inspection procedure and precautions for wiring harnesses and connectors, refer to IN - 36.

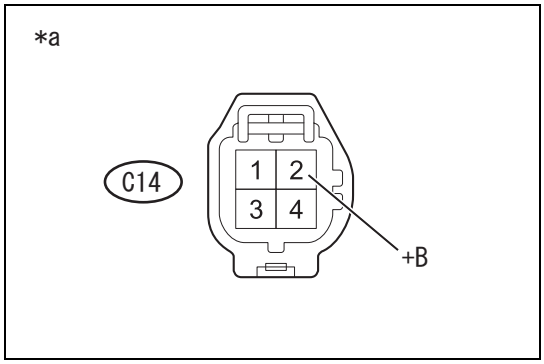

(1) Disconnect the air/fuel ratio sensor connector.
(2) Measure the voltage between the terminals.

Voltage

Inspection terminals	Inspection conditions	Standard value
C14-2 (+B) - chassis ground	IG ON	11 to 14 V

Captions in illustration

*a	Front side of vehicle wiring harness connector (air/fuel ratio sensor connector)

NOTE:
- Wiggle the wiring harness and connectors to identify trouble that may not occur constantly for a more accurate check.
- Make sure an excessive tension is not placed on the wiring harness.

NG → Power supply circuit check (air/fuel ratio sensor power supply circuit) (Refer to ES - 642)

OK

17	Check wiring harness and connector (engine control computer - air/fuel ratio sensor)

NOTE:
For the inspection procedure and precautions for wiring harnesses and connectors, refer to IN - 36.
(1) Disconnect the connector for the engine control computer.
(2) Disconnect the air/fuel ratio sensor connector.
(3) Measure the resistance between the terminals. (For terminal arrangement, refer to ES - 36.)

Resistance (open circuit check)

Inspection terminals	Inspection conditions	Standard value
A34-19 (A1A+) - C14-3 (A1A+)	Always	Less than 1 Ω
A34-18 (A1A-) - C14-4 (A1A-)	Always	Less than 1 Ω
A34-5 (HA1A) - C14-1 (HA1A)	Always	Less than 1 Ω

Resistance (short circuit check)

Inspection terminals	Inspection conditions	Standard value
A34-19 (A1A+) and C14-3 (A1A+) - other terminals and chassis ground	Always	10 k Ωor more
A34-18 (A1A-) and C14-4 (A1A-) - other terminals and chassis ground	Always	10 k Ωor more
A34-5 (HA1A) and C14-1 (HA1A) - other terminals and chassis ground	Always	10 k Ωor more

NOTE:
- Wiggle the wiring harness and connectors to identify trouble that may not occur constantly for a more accurate check.
- Make sure an excessive tension is not placed on the wiring harness.

NG → Repair or replacement of wiring harness or connector

OK

18	Freeze frame data check ([Initial Engine Coolant Temp], [Ambient Temperature], [Initial Intake Air Temp])

(1) Connect the SSM4 to the DLC3.
(2) Turn the ignition switch to ON.
(3) Follow the SSM4 on-screen instructions and use time-line freeze frame data to check vehicle conditions at the time the DTCs are detected. (Refer to ES - 28)

ES

Result

Time-line freeze frame data item	Result	Go to
[Initial Engine Coolant Temp], [Ambient Temperature], [Initial Intake Air Temp]	Difference in temperature for each is less than 10°C {18°F}. (*1)	A
	Difference in temperature for each is 10°C {18°F} or more. (*2)	B

NOTE:
- *1: A long period of time has elapsed after engine was stopped.
- *2: Only short period of time has elapsed after engine was stopped.

B → Go to Step 21.

A

19	Freeze frame data check ([Initial Engine Coolant Temp], [Coolant Temp.], [Time Since Engine Start])

(1) Connect the SSM4 to the DLC3.
(2) Turn the ignition switch to ON.
(3) Follow the SSM4 on-screen instructions and use time-line freeze frame data to check vehicle conditions at the time the DTCs are detected. (Refer to ES - 28)

Coolant temp. raise since start (Engine coolant temp. - coolant temp. at engine start)

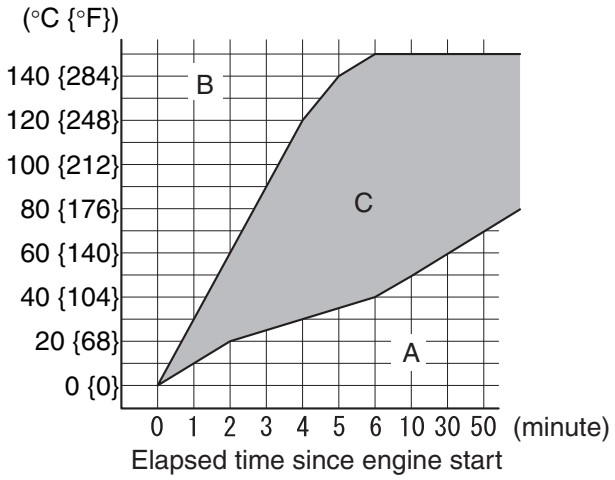

EN-10164

Result

Time-line freeze frame data item	Result	Possible cause	Go to
[Initial Engine Coolant Temp], [Coolant Temp.], [Time Since Engine Start]	Range of illustration A	• E.F.I. water temperature sensor • Thermostat	A
	Range of illustration B	• E.F.I. water temperature sensor	B
	Range of illustration C	-	C

B → Go to Step 22.

C → Go to Step 24.

A

20	Thermostat unit inspection

(1) Perform unit inspection of the thermostat. (Refer to CO - 37)

ES

Result

Result	Go to
Malfunction	A
Normal	B

B → Go to Step 22.

A

Thermostat replacement (Refer to CO - 36)

21	Freeze frame data check ([Ambient Temperature], [Coolant Temp.])

(1) Connect the SSM4 to the DLC3.
(2) Turn the ignition switch to ON.
(3) Follow the SSM4 on-screen instructions and use time-line freeze frame data to check vehicle conditions at the time the DTCs are detected. (Refer to ES - 28)

Result

Time-line freeze frame data item	Result	Possible cause	Go to
[Coolant Temp.]	120°C {248°F} or more	E.F.I. water temperature sensor	A
[Coolant Temp.], [Ambient Temperature]	Engine coolant temperature is at least 15°C {27°F} lower than the ambient temperature.	E.F.I. water temperature sensor	
Time-line freeze frame data items shown above	Each value is different from those shown above	-	B

B → Go to Step 24.

A

22	Unit inspection of the E.F.I. water temperature sensor

(1) Perform unit inspection of E.F.I. water temperature sensor. (Refer to ES - 696)

NG → Replacement of E.F.I. water temperature sensor (Refer to ES - 695)

OK

23	Check wiring harness and connector (engine control computer - E.F.I. water temperature sensor)

NOTE:
For the inspection procedure and precautions for wiring harnesses and connectors, refer to IN - 36.

(1) Disconnect the E.F.I. water temperature sensor connectors.
(2) Disconnect the connector for the engine control computer.
(3) Measure the resistance between the terminals. (For terminal arrangement, refer to ES - 36.)

ES

Resistance (open circuit check)

Inspection terminals	Inspection conditions	Standard value
A36-30(THW) - C40-2(THW)	Always	Less than 1 Ω
A36-29(E1) - C40-1(E2)	Always	Less than 1 Ω

Resistance (short circuit check)

Inspection terminals	Inspection conditions	Standard value
A36-30 (THW) and C40-2 (THW) - other terminals and chassis ground	Always	10 k Ωor more
A36-29 (E1) and C40-1 (E2) - other terminals and chassis ground	Always	10 k Ωor more

NOTE:
- Wiggle the wiring harness and connectors to identify trouble that may not occur constantly for a more accurate check.
- Make sure an excessive tension is not placed on the wiring harness.

NG → Repair or replacement of wiring harness or connector

OK

24	Freeze frame data check ([EVAP (Purge) VSV])

(1) Connect the SSM4 to the DLC3.
(2) Turn the ignition switch to ON.
(3) Follow the SSM4 on-screen instructions and use time-line freeze frame data to check vehicle conditions at the time the DTCs are detected. (Refer to ES - 28)

Result

Time-line freeze frame data item	Result	Possible cause	Go to
[EVAP (Purge) VSV]	At least 1 case is other than 0 %	Vacuum switching valve ASSY	A
	All cases are 0 %	-	B

NOTE:
When the vacuum switching valve ASSY is stuck closed due to a failure, A/F correction is improperly made and a leaner air/fuel ratio is created, and this may cause the engine to stall.

B → Go to Step 33.

A

25	Performing of SSM4 [Active Test] ([Activate the VSV for Evap Control])

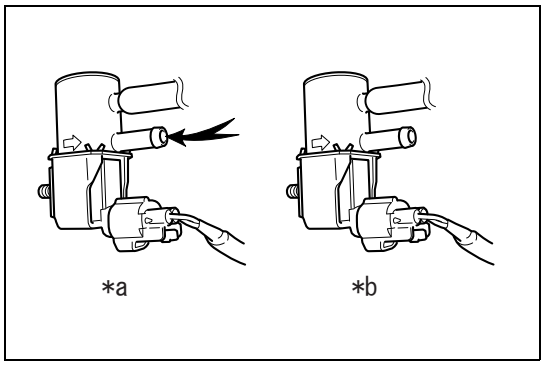

(1) Disconnect the vacuum hose (canister side) of the vacuum switching valve ASSY.
(2) Connect the SSM4 to the DLC3.
(3) Start the engine.
(4) Select the following menu items using the SSM4. : [Each System] / [Engine Control System] / [Work Support] / [Active Test] / [Activate the VSV for Evap Control]
(5) Activate the vacuum switching valve ASSY and check air vent.

Criteria

[Activate the VSV for Evap Control]	Criteria
ON	Air vent present
OFF	No air vent

Result

Result	Go to
Malfunction	A
Normal	B

Captions in illustration

*a	VSV ON (air vent present)
*b	VSV OFF (no air vent)

NOTE:
Wiggle the wiring harness and connectors to identify trouble that may not occur constantly for a more accurate check.

B → Go to Step 33.

A

26	Vacuum switching valve ASSY unit inspection

(1) Perform vacuum switching valve ASSY unit inspection. (Refer to EC - 18)

NG → Replacement of vacuum switching valve ASSY (Refer to EC - 18)

OK

27	Check wiring harness and connector (vacuum switching valve ASSY power supply circuit)

NOTE:
For the inspection procedure and precautions for wiring harnesses and connectors, refer to IN - 36.

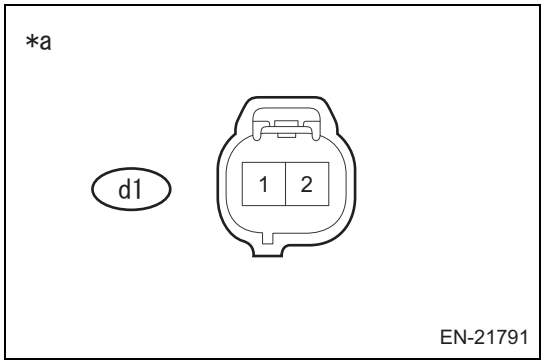

(1) Disconnect the vacuum switching valve ASSY connector.
(2) Turn the ignition switch to ON.
(3) Measure the voltage between terminals.

Voltage

Inspection terminals	Inspection conditions	Standard value
d1-1 - chassis ground	IG ON	11 to 14V

Captions in illustration

*a	Front side of vehicle wiring harness connector (Vacuum switching valve ASSY connector)

NOTE:
- Wiggle the wiring harness and connectors to identify trouble that may not occur constantly for a more accurate check.
- Make sure an excessive tension is not placed on the wiring harness.

NG → Repair or replacement of wiring harness or connector

OK

28	Check wiring harness and connector (engine control computer - vacuum switching valve ASSY)

NOTE:
For the inspection procedure and precautions for wiring harnesses and connectors, refer to IN - 36.
(1) Disconnect the connector for the engine control computer.
(2) Disconnect the vacuum switching valve ASSY connector.
(3) Measure the resistance between the terminals. (For terminal arrangement, refer to ES - 36.)

Resistance (open circuit check)

Inspection terminals	Inspection conditions	Standard value
A36-11(PRG) - d1-2	Always	Less than 1 Ω

Resistance (short circuit check)

Inspection terminals	Inspection conditions	Standard value
A36-11 (PRG) and d1-2 - other terminals and chassis ground	Always	10 k Ωor more

NOTE:
- Wiggle the wiring harness and connectors to identify trouble that may not occur constantly for a more accurate check.
- Make sure an excessive tension is not placed on the wiring harness.

NG → Repair or replacement of wiring harness or connector

OK

29	Clear DTC

(1) Connect the SSM4 to the DLC3.
(2) Turn the ignition switch to ON.

(3) Follow the SSM4 on-screen instructions to clear the DTCs. (Refer to ES - 28)

Next

30	Reading of SSM4 data ([EVAP (Purge) VSV])

(1) Connect the SSM4 to the DLC3.
(2) Turn the ignition switch to ON.
(3) Start the engine, turn off all the accessory switches, and wait until the engine warms up and the coolant temperature stabilizes. (at 75°C {167°F} or more).
(4) Idle the engine for 15 minutes or more.
(5) Select the following menu items using the SSM4. : [Each System] / [Engine Control System] / [Data monitor] / [Activate the VSV for Evap Control]
(6) Read the [EVAP (Purge) VSV] displayed on the SSM4.
Criteria: Value other than 0 % is displayed.

Result

Result	Go to
Malfunction	A
Normal	B

B → Inspection for problems that do not normally occur

A

31	Performing of SSM4 [Active Test] ([Activate the VSV for Evap Control])

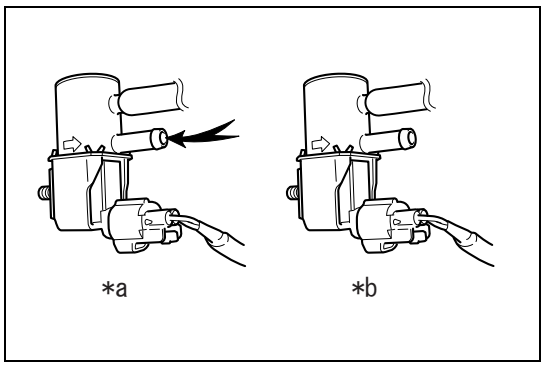

(1) Disconnect the vacuum hose (canister side) of the vacuum switching valve ASSY.
(2) Connect the SSM4 to the DLC3.
(3) Start the engine.
(4) Check the diagnostic codes using SSM4.
(5) Activate the vacuum switching valve ASSY and check air vent.

Criteria

[Activate the VSV for Evap Control]	Criteria
ON	Air vent present
OFF	No air vent

Result

Result	Go to
Malfunction	A
Normal	B

Captions in illustration

*a	VSV ON (air vent present)
*b	VSV OFF (no air vent)

NOTE:
Wiggle the wiring harness and connectors to identify trouble that may not occur constantly for a more accurate check.

B → Inspection for problems that do not normally occur

A

32	Check connection of the engine control computer connectors (power supply system)

NOTE:
For the inspection procedure and precautions for wiring harnesses and connectors, refer to IN - 36.

(1) Check the connection of the engine control computer connectors.
NOTE:
- Wiggle the wiring harness and connectors to identify trouble that may not occur constantly for a more accurate check.
- Make sure an excessive tension is not placed on the wiring harness.

NG → Reconnect the connectors.

OK

Replacement of the engine control computer (Refer to ES - 670)

33	Performing of SSM4 [Active Test] ([Control the Fuel Pump Duty])

(1) Connect the SSM4 to the DLC3.
(2) Turn the ignition switch to ON.
(3) Select the following menu items using the SSM4. : [Each System] / [Engine Control System] / [Work Support] / [Active Test] / [Control the Fuel Pump Duty]
(4) In [Active Test], check operation noise of the fuel pump (low-pressure side).

Criteria

[Control the Fuel Pump Duty]	Criteria
20 % and 80 %	Operating sound is heard.
OFF	Operating sound is not heard.

Result

Result	Go to
Malfunction	A
Normal	B

NOTE:
- Wiggle the wiring harness and connectors to identify trouble that may not occur constantly for a more accurate check.
- Make sure there is no fuel leakage from pipes, a trace of fuel leakage, or fuel odor while [Active Test] is performed.
- When abnormal noise is heard from the fuel pump (low-pressure side), go to step 34.

B → Go to Step 35.

A

34	Fuel pump unit inspection (low-pressure side)

(1) Perform a unit inspection on the fuel pump (low-pressure side) (Refer to FU - 56)

NG → Replacement of the fuel pump ASSY (low-pressure side) (Refer to FU - 47)

OK

ES

Inspection of fuel pump control system (low-pressure side) (Refer to FU - 9)

35	Fuel system check (function inspection)

(1) Perform the function inspection of the fuel system. (Refer to FU - 9)
- Fuel pressure check (low-pressure side)
- D4-S inspection (power balance) active test
- Fuel pump operation check and fuel leakage check

Result

Result	Go to
Malfunction	A
Normal	B

B → Inspection for problems that do not normally occur

A

36	Fuel system check (check for foreign materials caught in fuel pump)

(1) Check the area around the fuel pump (low-pressure side) (fuel pump itself, fuel pump filter, and inside the fuel tank ASSY) for an inclusion of foreign materials such as iron chips, and also check the fuel pump (low-pressure side) for any evidence of foreign material intrusion.

Result

Result	Go to
Foreign materials or any evidence of catching them are present	A
Neither foreign materials nor any evidence of catching them	B

NOTE:
Remove foreign materials such as iron chips from the fuel pump (low-pressure side), fuel pump filter, and fuel tank if they are present.

B → Repair or replacement of fuel system

A

37	Fuel system check (function inspection)

(1) Perform the function inspection of the fuel system. (Refer to FU - 9)
- Fuel pressure check (low-pressure side)
- D4-S inspection (power balance) active test
- Fuel pump operation check and fuel leakage check

NG → Repair or replace the faulty parts.

OK

Complete

38	Ignition system inspection

(1) Perform on-board ignition system check. (Refer to ES - 652)

NG → Repair or replace the faulty parts.

OK

39	Freeze frame data check ([Calculated load value, A/F Sensor #11])

(1) Connect the SSM4 to the DLC3.
(2) Turn the ignition switch to ON.
(3) Follow the SSM4 on-screen instructions and use time-line freeze frame data to check vehicle conditions at the time the DTCs are detected. (Refer to ES - 28)

Result

Time-line freeze frame data item	Result	Possible cause	Go to
[Calculated load value]	110 % or more than the normal value (*1)	Intake air flow meter SUB-ASSY	A
[A/F Sensor #11]	Less than 2.2 V (*2)	• Air / fuel ratio sensor • Wiring harness or connector	B
Time-line freeze frame data items shown above	Each value is different from those shown above	-	C

NOTE:
*1: When malfunction occurs in the intake air flow meter SUB-ASSY, the result of the calculation for the mass air flow becomes more than the specification, larger engine load value is displayed
*2: When a malfunctioning air/fuel ratio sensor continuously outputs a rich value, the air/fuel ratio is corrected to the leaner side and may cause the engine to stall.

B → Go to Step 43.

C → Go to Step 46.

A

40	Inspection of intake air flow meter SUB-ASSY

(1) Remove the intake air flow meter SUB-ASSY.

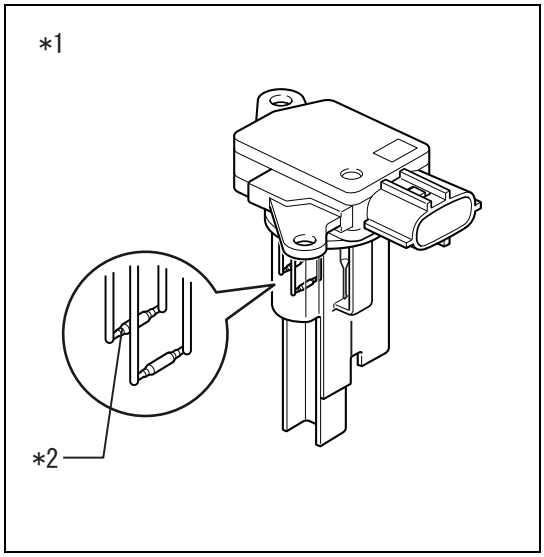

(2) The platinum filament (at heater area) in the flow duct of the intake air flow meter SUB-ASSY is free of foreign materials.

Result

Result	Go to
Visible foreign materials are not present	A
Visible foreign materials are present	B

Captions in illustration

*1	Intake air flow meter SUB-ASSY
*2	Platinum filament (heater)

B → Replacement of intake air flow meter SUB-ASSY (Refer to ES - 675)

A

41	Inspection of wiring harnesses and connectors (engine control computer - intake air flow meter SUB-ASSY)

NOTE:
For the inspection procedure and precautions for wiring harnesses and connectors, refer to IN - 36.

(1) Disconnect the connector for the engine control computer.
(2) Disconnect the connector of the intake air flow meter SUB-ASSY.
(3) Measure the resistance between the terminals. (For terminal arrangement, refer to ES - 36.)

Resistance (open circuit check)

Inspection terminals	Inspection conditions	Standard value
A33-22 (VG) - C16-5 (VG)	Always	Less than 1 Ω
A33-29 (E2G) - C16-4 (E2G)	Always	Less than 1 Ω

Resistance (short circuit check)

Inspection terminals	Inspection conditions	Standard value
A33-22 (VG) and C16-5 (VG) - other terminals and chassis ground	Always	10 k Ωor more
A33-29 (E2G) and C16-4 (E2G) - other terminals and chassis ground	Always	10 k Ωor more

NOTE:
- Wiggle the wiring harness and connectors to identify trouble that may not occur constantly for a more accurate check.
- Make sure an excessive tension is not placed on the wiring harness.

NG → Repair or replacement of wiring harness or connector

OK

42	Perform test drive for operation check ([Calculated load value])

(1) Connect the SSM4 to the DLC3.

(2) Start the engine, turn off all the accessory switches, and wait until the engine warms up and the coolant temperature stabilizes. (at 75°C {167°F} or more).
(3) Idle the engine.
(4) Check DTC using SSM4.
(5) Read the [Calculated load value] displayed on the SSM4.

Criteria

Item	Criteria
[Calculated load value]	90 to 110 % of the normal value

ES

NG → Replacement of intake air flow meter SUB-ASSY (Refer to ES - 675)

OK

43	SSM4 [Active Test] ([Cylinder Fuel Rate])

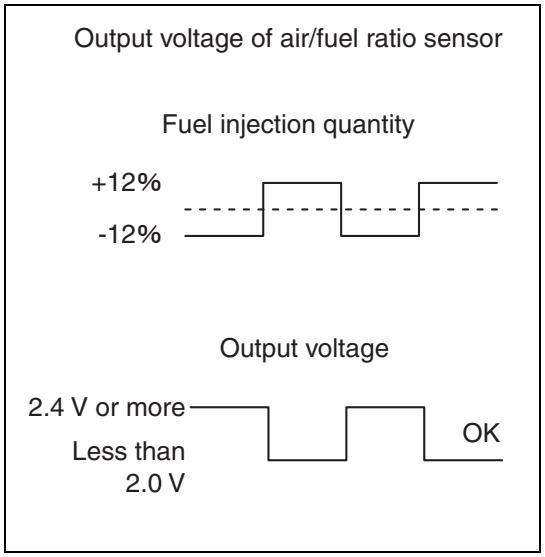

(1) Connect the SSM4 to the DLC3.
(2) Start the engine, turn off all the accessory switches, and wait until the engine warms up and the coolant temperature stabilizes. (at 80°C {176°F} or more).
(3) Run the engine at 2500 r/min for approximately 3 minutes to warm up each sensor.
(4) Select the following menu items using the SSM4. : [Each System] / [Engine Control System] / [Work Support] / [Active Test] / [Cylinder Fuel Rate]
(5) Run the engine on idling, increase and decrease [Cylinder Fuel Rate], and read values of the air/fuel ratio sensor voltage [A/F Sensor #11].

Voltage

Tester item	Standard value
Fuel injection amount (+12%)	Output voltage of air/fuel ratio sensor is less than 2.0 V.
Fuel injection amount (-12 %)	Output voltage of air/fuel ratio sensor is 2.4V or more.

CAUTION:
- Voltage output of the air/fuel ratio sensor delays a few seconds.
- Because the sensors become cold, measure the voltage promptly after warming up the sensors.

Result

Result	Go to
Malfunction	A
Normal	B

B → Go to Step 46.

A

44	Check wiring harness and connector (air/fuel ratio sensor power supply circuit)

NOTE:
For the inspection procedure and precautions for wiring harnesses and connectors, refer to IN - 36.

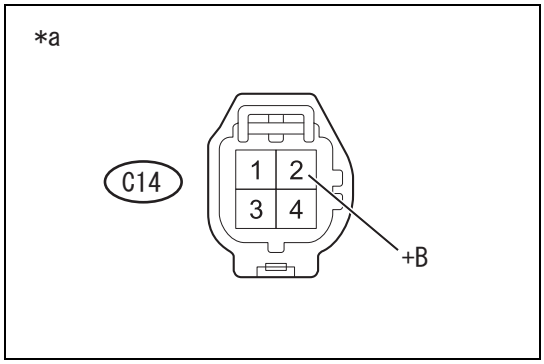

(1) Disconnect the air/fuel ratio sensor connector.
(2) Turn the ignition switch to ON.
(3) Measure the voltage between the terminals.

Voltage

Inspection terminals	Inspection conditions	Standard value
C14-2 (+B) - chassis ground	IG ON	11 to 14 V

Captions in illustration

*a	Front side of vehicle wiring harness connector (air/fuel ratio sensor connector)

NOTE:
- Wiggle the wiring harness and connectors to identify trouble that may not occur constantly for a more accurate check.
- Make sure an excessive tension is not placed on the wiring harness.

NG → Power supply circuit check (air/fuel ratio sensor power supply circuit) (Refer to ES - 642)

OK

45	Check wiring harness and connector (engine control computer - air/fuel ratio sensor)

NOTE:
For the inspection procedure and precautions for wiring harnesses and connectors, refer to IN - 36.
(1) Disconnect the connector for the engine control computer.
(2) Disconnect the air/fuel ratio sensor connector.
(3) Measure the resistance between the terminals. (For terminal arrangement, refer to ES - 36.)

Resistance (open circuit check)

Inspection terminals	Inspection conditions	Standard value
A34-19 (A1A+) - C14-3 (A1A+)	Always	Less than 1 Ω
A34-18 (A1A-) - C14-4 (A1A-)	Always	Less than 1 Ω
A34-5 (HA1A) - C14-1 (HA1A)	Always	Less than 1 Ω

Resistance (short circuit check)

Inspection terminals	Inspection conditions	Standard value
A34-19 (A1A+) and C14-3 (A1A+) - other terminals and chassis ground	Always	10 k Ωor more
A34-18 (A1A-) and C14-4 (A1A-) - other terminals and chassis ground	Always	10 k Ωor more
A34-5 (HA1A) and C14-1 (HA1A) - other terminals and chassis ground	Always	10 k Ωor more

NOTE:
- Wiggle the wiring harness and connectors to identify trouble that may not occur constantly for a more accurate check.
- Make sure an excessive tension is not placed on the wiring harness.

NG → Repair or replacement of wiring harness or connector

OK

46	Freeze frame data check ([Initial Engine Coolant Temp], [Ambient Temp for A/C], [Initial Intake Air Temp])

(1) Connect the SSM4 to the DLC3.
(2) Turn the ignition switch to ON.
(3) Follow the SSM4 on-screen instructions and use time-line freeze frame data to check vehicle conditions at the time the DTCs are detected. (Refer to ES - 28)

ES

Result

Time-line freeze frame data item	Result	Go to
[Initial Engine Coolant Temp], [Ambient Temperature], [Initial Intake Air Temp]	Difference in temperature for each is less than 10°C {18°F}. (*1)	A
	Difference in temperature for each is 10°C {18°F} or more. (*2)	B

NOTE:
- *1: A long period of time has elapsed after engine was stopped.
- *2: Only short period of time has elapsed after engine was stopped.

B → Go to Step 49.

A

47	Freeze frame data check ([Initial Engine Coolant Temp], [Coolant Temp.], [Time Since Engine Start])

(1) Connect the SSM4 to the DLC3.
(2) Turn the ignition switch to ON.
(3) Follow the SSM4 on-screen instructions and use time-line freeze frame data to check vehicle conditions at the time the DTCs are detected. (Refer to ES - 28)

Coolant temp. raise since start
(Engine coolant temp. - coolant temp. at engine start)

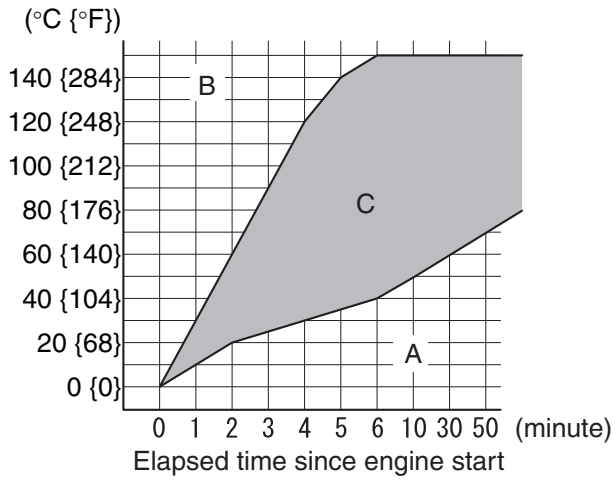

EN-10164

Result

Time-line freeze frame data item	Result	Possible cause	Go to
[Initial Engine Coolant Temp], [Coolant Temp.], [Time Since Engine Start]	Range of illustration A	• E.F.I. water temperature sensor • Thermostat	A
	Range of illustration B	• E.F.I. water temperature sensor	B
	Range of illustration C	-	C

B → Go to Step 50.

C → Go to Step 78.

A

48	Thermostat unit inspection

(1) Perform unit inspection of the thermostat. (Refer to CO - 37)

Result

Result	Go to
Malfunction	A
Normal	B

B → Go to Step 50.

A

Thermostat replacement (Refer to CO - 36)

49	Freeze frame data check ([Ambient Temperature], [Coolant Temp.])

(1) Connect the SSM4 to the DLC3.
(2) Turn the ignition switch to ON.
(3) Follow the SSM4 on-screen instructions and use time-line freeze frame data to check vehicle conditions at the time the DTCs are detected. (Refer to ES - 28)

Result

Time-line freeze frame data item	Result	Possible cause	Go to
[Coolant Temp.]	120°C {248°F}	E.F.I. water temperature sensor	A
[Coolant Temp.], [Ambient Temperature]	Engine coolant temperature is at least 15°C {27°F} lower than the ambient temperature.	E.F.I. water temperature sensor	
Time-line freeze frame data items shown above	Each value is different from those shown above	-	B

B → Go to Step 81.

A

50	Unit inspection of the E.F.I. water temperature sensor

(1) Perform unit inspection of E.F.I. water temperature sensor. (Refer to ES - 696)

NG → Replacement of E.F.I. water temperature sensor (Refer to ES - 695)

OK

ES

51	Check wiring harness and connector (engine control computer - E.F.I. water temperature sensor)

NOTE:
For the inspection procedure and precautions for wiring harnesses and connectors, refer to IN - 36.

(1) Disconnect the E.F.I. water temperature sensor connectors.
(2) Disconnect the connector for the engine control computer.
(3) Measure the resistance between the terminals. (For terminal arrangement, refer to ES - 36.)

Resistance (open circuit check)

Inspection terminals	Inspection conditions	Standard value
A36-30(THW) - C40-2(THW)	Always	Less than 1 Ω
A36-29(E1) - C40-1(E2)	Always	Less than 1 Ω

Resistance (short circuit check)

Inspection terminals	Inspection conditions	Standard value
A36-30 (THW) and C40-2 (THW) - other terminals and chassis ground	Always	10 k Ωor more
A36-29 (E1) and C40-1 (E2) - other terminals and chassis ground	Always	10 k Ωor more

NOTE:
- Wiggle the wiring harness and connectors to identify trouble that may not occur constantly for a more accurate check.
- Make sure an excessive tension is not placed on the wiring harness.

NG → Repair or replacement of wiring harness or connector

OK

Inspection for problems that do not normally occur

52	Ignition system inspection

(1) Perform on-board ignition system check. (Refer to ES - 652)

NG → Repair or replace the faulty parts.

OK

53	Freeze frame data check ([ISC Learning Value], [ISC Feedback Value])

(1) Connect the SSM4 to the DLC3.
(2) Turn the ignition switch to ON.
(3) Follow the SSM4 on-screen instructions and use time-line freeze frame data to check vehicle conditions at the time the DTCs are detected. (Refer to ES - 28)

Result

Time-line freeze frame data item	Result	Possible cause	Go to
Sum of [ISC Learning Value] and [ISC Feedback Value]	Less than 80 % of the current value	Intake air failure	A
	80 % or more than the current value		B

B → Go to Step 56.

A

54	Intake system inspection

(1) Make sure there is no air leakage (from disconnected hoses, cracks, gaskets) at each part of the intake system. (Refer to IE - 4)
NOTE:
- Present of air leakage can be easily checked by racing the engine then releasing the accelerator pedal completely because this creates high vacuum that leads to large air induction noise.
- Air may be leaking (sucked in) if [Short term fuel trim B1] and [Long term fuel trim B1] show a larger difference between idling time (smaller mass air flow) and the normal time, and a smaller difference between racing time (larger mass air flow) and the normal time.

Criteria: No air induction

NG → Repair or replacement of intake system

OK

55	Intake system check (function inspection)

(1) Check each part of the intake system.
- Brake booster ASSY check (Refer to BR - 2)
- Intake air flow meter SUB-ASSY check (Refer to ES - 676)
- Ventilation hose check (Refer to EC - 3)
- Ventilation valve SUB-ASSY check (Refer to EC - 22)
- Vacuum switching valve ASSY check (Refer to EC - 18)

Result

Result	Go to
Malfunction	A
Normal	B

B → Go to Step 60.

A

Repair or replace the faulty parts.

56	Performing of SSM4 [Active Test] ([Control the VVT Linear (Bank1)], [Control the VVT Linear (Bank2)])

ES

(1) Connect the SSM4 to the DLC3.
(2) Start the engine and let it warm up until the engine coolant temperature stabilizes. (at 75°C [167°F] or more)
(3) Select the following menu items using the SSM4. : [Each System] / [Engine Control System] / [Work Support] / [Control the VVT Linear (Bank1)], [Control the VVT Linear (Bank2)]
(4) Start the engine and idle the engine and check the idle speed under [Active Test].

Criteria

Inspection conditions	Criteria
0°CA	Normal idle speed
Advance or retard the timing between 0°CA ←→100°CA.	Engine stalls, rough idling

NOTE:
- Wiggle the wiring harness and connectors to identify trouble that may not occur constantly for a more accurate check.
- Check the operation noise under [Active Test]. Also check the valves for problems such as failed valve return, stuck valve, and abnormal conditions.
- If the camshaft timing oil control valve ASSY (intake side) is stuck ON, valve overlap increases and internal EGR causes poor combustion, and eventually may lead to rough idling and engine stall.

NG → Replacement of camshaft timing oil control valve ASSY (intake side) (Refer to ES - 660)

OK

57	Check wiring harness and connector (engine control computer - camshaft timing oil control valve ASSY (intake side))

NOTE:
For the inspection procedure and precautions for wiring harnesses and connectors, refer to IN - 36.

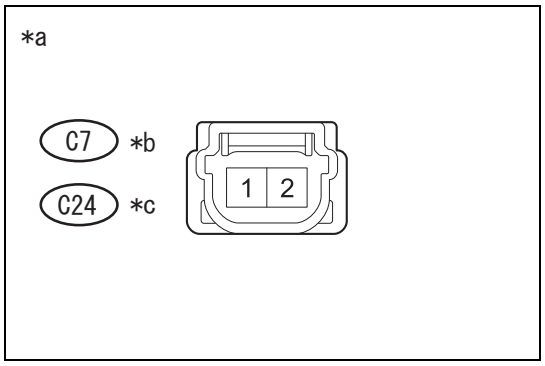

(1) Disconnect camshaft timing oil control valve ASSY (intake side) connector.
(2) Measure the voltage between the terminals.

Voltage

Inspection terminals	Inspection conditions	Standard value
C7-1 - chassis ground	IG ON	11 to 14 V
C24-1 - chassis ground	IG ON	11 to 14 V

(3) Disconnect the connector for the engine control computer.

(4) Measure the resistance between the terminals. (For terminal arrangement, refer to ES - 36.)

Resistance (open circuit check)

Inspection terminals	Inspection conditions	Standard value
A36-17 (OC1) - C7-2	Always	Less than 1 Ω
A36-16 (OC2) - C24-2	Always	Less than 1 Ω

Resistance (short circuit check)

Inspection terminals	Inspection conditions	Standard value
A36-17 (OC1) and C7-2 - other terminals and chassis ground	Always	10 k Ωor more
A36-16 (OC2) and C24-2 - other terminals and chassis ground	Always	10 k Ωor more

Captions in illustration

*a	Front side of vehicle wiring harness connector (Camshaft timing oil control valve ASSY (intake side) connector)
*b	Bank 1
*c	Bank 2

NOTE:

- Wiggle the wiring harness and connectors to identify trouble that may not occur constantly for a more accurate check.
- Make sure an excessive tension is not placed on the wiring harness.

NG → Repair or replacement of wiring harness or connector

OK

58	Performing of SSM4 [Active Test] ([Control the VVT Exhaust Linear (Bank1)], [Control the VVT Exhaust Linear (Bank2)])

(1) Connect the SSM4 to the DLC3.
(2) Start the engine and let it warm up until the engine coolant temperature stabilizes. (at 75°C [167°F] or more)
(3) Select the following menu items using the SSM4. : [Each System] / [Engine Control System] / [Work Support] / [Control the VVT Exhaust Linear (Bank1)], [Control the VVT Exhaust Linear (Bank2)]
(4) Start the engine and idle the engine and check the idle speed under [Active Test].

Criteria

Inspection conditions	Criteria
0°CA	Normal idle speed
Advance or retard the timing between 0°CA ←→100°CA.	Engine stalls, rough idling

NOTE:

- Wiggle the wiring harness and connectors to identify trouble that may not occur constantly for a more accurate check.

- Check the operation noise under [Active Test]. Also check the valves for problems such as failed valve return, stuck valve, and abnormal conditions.
- If the camshaft timing oil control valve ASSY (exhaust side) is stuck ON, valve overlap increases and internal EGR causes poor combustion, and eventually may lead to rough idling and engine stall.

NG → Replacement of camshaft timing oil control valve ASSY (exhaust side) (Refer to ES - 660)

ES

OK

59	Check wiring harness and connector (engine control computer - camshaft timing oil control valve ASSY (exhaust side))

NOTE:
For the inspection procedure and precautions for wiring harnesses and connectors, refer to IN - 36.

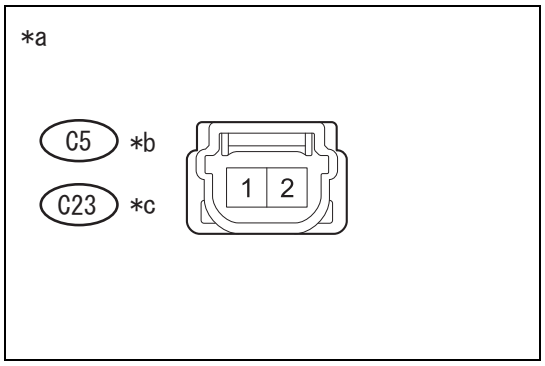

(1) Disconnect camshaft timing oil control valve ASSY (exhaust side) connector.
(2) Measure the voltage between the terminals.

Voltage

Inspection terminals	Inspection conditions	Standard value
C5-1 - chassis ground	IG ON	11 to 14 V
C23-1 - chassis ground	IG ON	11 to 14 V

(3) Disconnect the connector for the engine control computer.
(4) Measure the resistance between the terminals. (For terminal arrangement, refer to ES - 36.)

Resistance (open circuit check)

Inspection terminals	Inspection conditions	Standard value
A36-7 (OE1) - C5-2	Always	Less than 1 Ω
A36-5 (OE2) - C23-2	Always	Less than 1 Ω

Resistance (short circuit check)

Inspection terminals	Inspection conditions	Standard value
A36-7 (OE1) and C5-2 - other terminals and chassis ground	Always	10 k Ωor more
A36-5 (OE2) and C23-2 - other terminals and chassis ground	Always	10 k Ωor more

Captions in illustration

*a	Front side of vehicle wiring harness connector (Camshaft timing oil control valve ASSY (intake side) connector)
*b	Bank 1
*c	Bank 2

NOTE:
- Wiggle the wiring harness and connectors to identify trouble that may not occur constantly for a more accurate check.
- Make sure an excessive tension is not placed on the wiring harness.

NG → Repair or replacement of wiring harness or connector

OK

ES

60	Freeze frame data check ([Ignition timing adv. #1], [Knock Correct Learn Value])

(1) Connect the SSM4 to the DLC3.
(2) Turn the ignition switch to ON.
(3) Follow the SSM4 on-screen instructions and use time-line freeze frame data to check vehicle conditions at the time the DTCs are detected. (Refer to ES - 28)

Result

Time-line freeze frame data item		Possible cause	Go to
[Ignition timing adv. #1]	[Knock Correct Learn Value]		
Difference from the normal value is 10° or more	Less than 3°CA	• E.F.I. water temperature sensor • Intake air flow meter SUB-ASSY • Knock control sensor	A
	3°CA or more	-	B
Difference from the normal value is within 10°	-	-	

B → Inspection for problems that do not normally occur

A

61	Unit inspection of the E.F.I. water temperature sensor

(1) Perform unit inspection of E.F.I. water temperature sensor. (Refer to ES - 696)

NG → Replacement of E.F.I. water temperature sensor (Refer to ES - 695)

OK

62	Check wiring harness and connector (engine control computer - E.F.I. water temperature sensor)

NOTE:
For the inspection procedure and precautions for wiring harnesses and connectors, refer to IN - 36.
(1) Disconnect the E.F.I. water temperature sensor connectors.
(2) Disconnect the connector for the engine control computer.
(3) Measure the resistance between the terminals. (For terminal arrangement, refer to ES - 36.)

Resistance (open circuit check)

Inspection terminals	Inspection conditions	Standard value
A36-30(THW) - C40-2(THW)	Always	Less than 1 Ω

Inspection terminals	Inspection conditions	Standard value
A36-29(E1) - C40-1(E2)	Always	Less than 1 Ω

Resistance (short circuit check)

Inspection terminals	Inspection conditions	Standard value
A36-30 (THW) and C40-2 (THW) - other terminals and chassis ground	Always	10 k Ωor more
A36-29 (E1) and C40-1 (E2) - other terminals and chassis ground	Always	10 k Ωor more

ES

NOTE:
- Wiggle the wiring harness and connectors to identify trouble that may not occur constantly for a more accurate check.
- Make sure an excessive tension is not placed on the wiring harness.

NG → Repair or replacement of wiring harness or connector

OK

63	Unit inspection of intake air flow meter SUB-ASSY (inlet air temperature sensor check)

(1) Perform unit inspection of intake air flow meter SUB-ASSY. (Refer to ES - 676)

NOTE:
When a value higher than the normal intake air temperature is output to the engine control computer due to a failure of the intake air flow meter SUB-ASSY (inlet temperature sensor), the timing may be retarded.

NG → Replacement of intake air flow meter SUB-ASSY (Refer to ES - 675)

OK

64	Reading of SSM4 data ([Ignition timing adv. #1], [Knock Correct Learn Value])

(1) Connect the SSM4 to the DLC3.
(2) Start the engine, turn off all the accessory switches, and wait until the engine warms up and the coolant temperature stabilizes. (at 75°C [167°F] or more).
(3) Idle the engine.
(4) Select the following menu items using the SSM4. : [Each System] / [Engine Control System] / [Data monitor] / [Ignition timing adv. #1], [Knock Correct Learn Value]
(5) Read the [Ignition timing adv. #1] and [Knock Correct Learn Value] displayed on the SSM4.

Result

Item		Go to
[Ignition timing adv. #1]	[Knock Correct Learn Value]	
Difference from the current value is 10° or more	Less than 3 °	A
	3° or more	B
Difference from the current value is within 10°	-	

NOTE:
When normal results are obtained in steps 56 through 64, if a sum of [ISC Learning Value] and [ISC Feedback Value] is 120 % or more than the normal value, check the throttle body ASSY for carbon deposit. If carbon deposit is found, replace the throttle body ASSY and complete the work.

B → Complete

A

ES

Knock sensor circuit check (Refer to ES - 301)

65	Engine control computer check (fuel injector ASSY (port injection side) power supply circuit)

NOTE:
For the inspection procedure and precautions for wiring harnesses and connectors, refer to IN - 36.

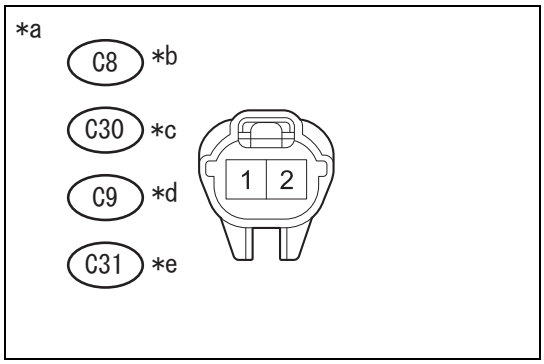

(1) Disconnect the connector for fuel injector ASSY (port injection side).
(2) Turn the ignition switch to ON.
(3) Measure the voltage between terminals. (For terminal arrangement, refer to ES - 36.)

Voltage

Inspection terminals	Inspection conditions	Standard value
C8-1 - chassis ground	IG ON	11 to 14 V
C30-1 - chassis ground	IG ON	11 to 14 V
C9-1 - chassis ground	IG ON	11 to 14 V
C31-1 - chassis ground	IG ON	11 to 14 V

Captions in illustration

*a	Front side of vehicle wiring harness connector (fuel injector ASSY (port injection side) connectors)
*b	No. 1 cylinder
*c	No. 2 cylinder
*d	No. 3 cylinder
*e	No. 4 cylinder

NOTE:
- Wiggle the wiring harness and connectors to identify trouble that may not occur constantly for a more accurate check.
- Make sure an excessive tension is not placed on the wiring harness.
- Trouble in all cylinders or multiple cylinders may be the possible causes of the abrupt drop in engine speed. (Failure in the power supply system of the common wiring harness to all cylinders could be the cause.)

NG → Power supply circuit check (fuel injector ASSY (port injection side)) (Refer to ES - 633)

OK

66	Ignition system inspection

(1) Perform on-board ignition system check. (Refer to ES - 652)

NG → Repair or replace the faulty parts.

OK

ES

67	Freeze frame data check ([A/C Switch], [Air Conditioner FB Val])

(1) Connect the SSM4 to the DLC3.
(2) Turn the ignition switch to ON.
(3) Follow the SSM4 on-screen instructions and use time-line freeze frame data to check vehicle conditions at the time the DTCs are detected. (Refer to ES - 28)

Result

Time-line freeze frame data item		Possible cause	Go to
[A/C Switch], [Air Conditioner FB Val]	[Air Conditioner FB Val]		
Reading of [A/C Switch] does not change from OFF, or the reading of [Air Conditioner FB Val] does not increase (20 % or less than [ISC Learning Value] (standard *1))	-	Other than air conditioner system	A
Reading of [A/C Switch] has changed from OFF to ON, or the reading of [Air Conditioner FB Val] has increased (20 % or more than [ISC Learning Value] (standard *1))	No values are indicated.		
	Values are indicated.	Air conditioner system (automatic air conditioning system)	B
		Air conditioner system (manual air conditioning system)	C

NOTE:
- *1: The normal value of [ISC Learning Value] is the displacement (liter) ×0.9.
- Even if the results are normal, there is still a possibility of trouble in the air conditioning system. If no fault is found in other parts, inspect the air conditioning system.

B → Air conditioner check (automatic air conditioning system) (Refer to AC - 18)

C → Air conditioner check (manual air conditioning system) (Refer to AC - 76)

A

68	Freeze frame data check ([Electric Load Feedback Val], [Engine Speed], turbine speed, [Vehicle Speed])

(1) Connect the SSM4 to the DLC3.
(2) Turn the ignition switch to ON.
(3) Follow the SSM4 on-screen instructions and use time-line freeze frame data to check vehicle conditions at the time the DTCs are detected. (Refer to ES - 28)

Result

Time-line freeze frame data item				Possible cause	Go to
[Electric Load Feedback Val]		Difference between [Engine Speed] and turbine speed	[Vehicle Speed]		
Reading of [Electric Load Feedback Val] increases *1 (20 % or more than [ISC Learning Value] (standard *2))	No values are indicated.	All cases are 100 r/min or more	-	-	A
		At least one case is less than 100 r/min (*3)	30km/h {19 MPH} or more	-	A
			Less than 30km/h {19 MPH}	Automatic transmission system	B
	Values are indicated.	-	-	Electric load signal system	C
Reading of [Electric Load Feedback Val] does not increase (20 % or less than [ISC Learning Value] (standard *2))	-	All cases are 100 r/min or more	-	-	A
		At least one case is less than 100 r/min (*3)	30km/h {19 MPH} or more	-	A
			Less than 30km/h {19 MPH}	Automatic transmission system	B

NOTE:

- *1: If [Electric Load Feedback Val] is increasing, this may indicate a failure due to a change in electric load. Check the power steering system and generator, and also check the continuity and connectors between generator and engine control computer for improper connection.
- *2: The normal value of [ISC Learning Value] is the displacement (liter) ×0.9.
- *3: When the difference between [Engine Speed] and the turbine speed is small, the engine and turbine are locked up. Because the lock-up is usually released when the vehicle speed is 30 km/h {19 MPH} or less, a faulty automatic transmission system is presumed. (At this time, a delay in [Vehicle Speed] of the freeze frame data should be taken into consideration. The delay is approximately 0.5 seconds when compared to the actual vehicle speed.)
- Even if the results are normal, there is still a possibility of trouble in the electric load signal system and the automatic transmission system. If no fault is found in other parts, inspect the electric load signal system, power steering system, and the automatic transmission system.

B → Automatic transmission check (automatic transmission system) (Refer to AT - 15)

C → Alternator system check (charging system)

A

69	Freeze frame data check ([Shift SW Status (P Range)], [Shift SW Status (N Range)], [Neutral Position Switch])

(1) Connect the SSM4 to the DLC3.
(2) Turn the ignition switch to ON.

(3) Follow the SSM4 on-screen instructions and use time-line freeze frame data to check vehicle conditions at the time the DTCs are detected. (Refer to ES - 28)

Result

Time-line freeze frame data item		Possible cause	Go to
[Shift SW Status (P Range)] or [Shift SW Status (N Range)]	[Neutral Position Switch]		
At least one case is OFF	NSW ON when D position or R position is selected	Neutral start switch ASSY system	A
	NSW OFF when D position or R position is selected	Automatic transmission system	B
All cases are ON	-	-	C

NOTE:
Even if the results are normal, there is still a possibility of trouble in the neutral start switch ASSY system and the automatic transmission system. If no fault is found in other parts, inspect the neutral start switch ASSY system and the automatic transmission system.

B → Automatic transmission check (automatic transmission system) (Refer to AT - 15)

C → Inspection for problems that do not normally occur

A

Neutral start switch ASSY check (refer to AT - 189)

70	Freeze frame data check ([Relative Throttle Pos.], [Calculated load value])

(1) Connect the SSM4 to the DLC3.
(2) Turn the ignition switch to ON.
(3) Follow the SSM4 on-screen instructions and use time-line freeze frame data to check vehicle conditions at the time the DTCs are detected. (Refer to ES - 28)

Result

Time-line freeze frame data item	Result	Possible cause	Go to
[Relative Throttle Pos.], [Calculated load value]	Engine load value is decreasing while throttle opening angle is increasing	Intake air flow meter SUB-ASSY	A
	Engine load value is not decreasing while throttle opening angle is increasing	-	B

B → Go to Step 74.

A

71	Inspection of intake air flow meter SUB-ASSY

(1) Remove the intake air flow meter SUB-ASSY.

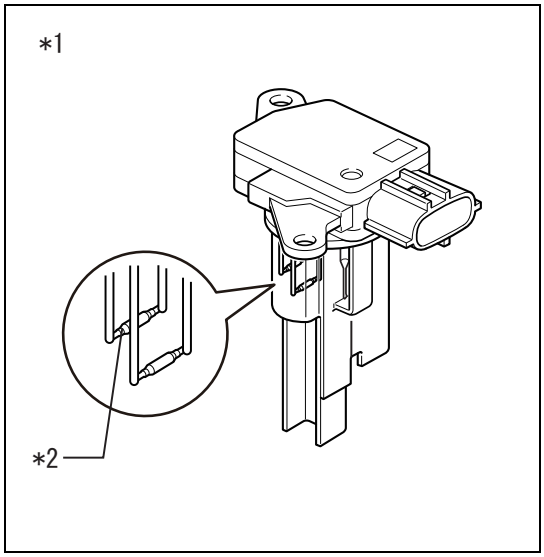

(2) The platinum filament (at heater area) in the flow duct of the intake air flow meter SUB-ASSY is free of foreign materials.

Result

Result	Go to
Visible foreign materials are not present	A
Visible foreign materials are present	B

Captions in illustration

*1	Intake air flow meter SUB-ASSY
*2	Platinum filament (heater)

ES

B → Replacement of intake air flow meter SUB-ASSY (Refer to ES - 675)

A

72	Inspection of wiring harnesses and connectors (engine control computer - intake air flow meter SUB-ASSY)

NOTE:
For the inspection procedure and precautions for wiring harnesses and connectors, refer to IN - 36.

(1) Disconnect the connector for the engine control computer.
(2) Disconnect the connector of the intake air flow meter SUB-ASSY.
(3) Measure the resistance between the terminals. (For terminal arrangement, refer to ES - 36.)

Resistance (open circuit check)

Inspection terminals	Inspection conditions	Standard value
A33-22 (VG) - C16-5 (VG)	Always	Less than 1 Ω
A33-29 (E2G) - C16-4 (E2G)	Always	Less than 1 Ω

Resistance (short circuit check)

Inspection terminals	Inspection conditions	Standard value
A33-22 (VG) and C16-5 (VG) - other terminals and chassis ground	Always	10 k Ωor more
A33-29 (E2G) and C16-4 (E2G) - other terminals and chassis ground	Always	10 k Ωor more

NOTE:
- Wiggle the wiring harness and connectors to identify trouble that may not occur constantly for a more accurate check.
- Make sure an excessive tension is not placed on the wiring harness.

NG → Repair or replacement of wiring harness or connector

OK

73	Perform test drive for operation check ([Calculated load value])

(1) Connect the SSM4 to the DLC3.

(2) Start the engine, turn off all the accessory switches, and wait until the engine warms up and the coolant temperature stabilizes. (at 75°C {167°F} or more).
(3) Idle the engine.
(4) Select the following menu items using the SSM4. : [Each System] / [Engine Control System] / [Data monitor] / [Calculated load value]
(5) Read the [Calculated load value] displayed on the SSM4.

Criteria

Item	Criteria
[Calculated load value]	90 to 110 % of the normal value

NG → Replacement of intake air flow meter SUB-ASSY (Refer to ES - 675)

OK

74	Engine control computer check (fuel injector ASSY (port injection side) power supply circuit)

NOTE:
For the inspection procedure and precautions for wiring harnesses and connectors, refer to IN - 36.

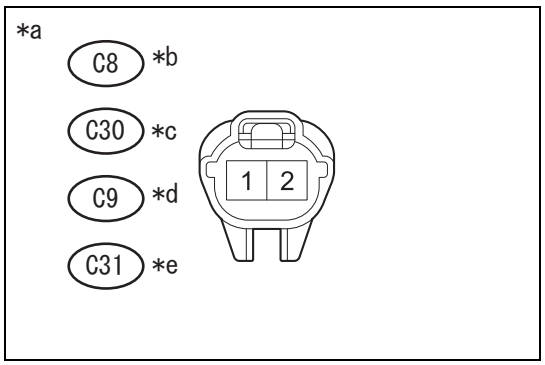

(1) Disconnect the connector for fuel injector ASSY (port injection side).
(2) Turn the ignition switch to ON.
(3) Measure the voltage between terminals. (Refer to ES - 36)

Voltage

Inspection terminals	Inspection conditions	Standard value
C8-1 - chassis ground	IG ON	11 to 14 V
C30-1 - chassis ground	IG ON	11 to 14 V
C9-1 - chassis ground	IG ON	11 to 14 V
C31-1 - chassis ground	IG ON	11 to 14 V

Captions in illustration

*a	Front side of vehicle wiring harness connector (fuel injector ASSY (port injection side) connectors)
*b	No. 1 cylinder
*c	No. 2 cylinder
*d	No. 3 cylinder
*e	No. 4 cylinder

NOTE:
- Wiggle the wiring harness and connectors to identify trouble that may not occur constantly for a more accurate check.
- Make sure an excessive tension is not placed on the wiring harness.
- Trouble in all cylinders or multiple cylinders may be the possible causes of the abrupt drop in engine speed. (Failure in the power supply system of the common wiring harness to all cylinders could be the cause.)

NG → Power supply circuit check (fuel injector ASSY (port injection side)) (Refer to ES - 633)

OK

75	Ignition system inspection

(1) Perform on-board ignition system check. (Refer to ES - 652)

NG → Repair or replace the faulty parts.

OK

76	Performing of SSM4 [Active Test] ([Control the Fuel Pump Duty])

(1) Connect the SSM4 to the DLC3.
(2) Turn the ignition switch to ON.
(3) Select the following menu items using the SSM4. : [Each System] / [Engine Control System] / [Work Support] / [Active Test] / [Control the Fuel Pump Duty]
(4) In [Active Test], check operation noise of the fuel pump (low-pressure side).

Criteria

[Control the Fuel Pump Duty]	Criteria
20 % and 80 %	Operating sound is heard.
OFF	Operating sound is not heard.

Result

Result	Go to
Malfunction	A
Normal	B

NOTE:
- Wiggle the wiring harness and connectors to identify trouble that may not occur constantly for a more accurate check.
- Make sure there is no fuel leakage from pipes, a trace of fuel leakage, or fuel odor while [Active Test] is performed.
- When abnormal noise is heard from the fuel pump (low-pressure side), go to step 77.

B → Go to Step 78.

A

77	Fuel pump unit inspection (low-pressure side)

(1) Perform a unit inspection on the fuel pump (low-pressure side) (Refer to FU - 56)

NG → Replacement of the fuel pump ASSY (low-pressure side) (Refer to FU - 47)

OK

Inspection of fuel pump control system (low-pressure side) (Refer to FU - 9)

78	Fuel system check (function inspection)

(1) Perform the function inspection of the fuel system. (Refer to FU - 9)
- Fuel pressure check (low-pressure side)
- D4-S inspection (power balance) [Active Test]
- Fuel pump operation check and fuel leakage check

Result

Result	Go to
Malfunction	A
Normal	B

B → Inspection for problems that do not normally occur

A

79	Fuel system check (check for foreign materials caught in fuel pump)

(1) Check the area around the fuel pump (low-pressure side) (fuel pump itself, fuel pump filter, and inside the fuel tank ASSY) for an inclusion of foreign materials such as iron chips, and also check the fuel pump (low-pressure side) for any evidence of foreign material intrusion.

Result

Result	Go to
Foreign materials or any evidence of catching them are present	A
Neither foreign materials nor any evidence of catching them	B

NOTE:
Remove foreign materials such as iron chips from the fuel pump (low-pressure side), fuel pump filter, and fuel tank if they are present.

B → Repair or replacement of fuel system

A

80	Fuel system check (function inspection)

(1) Perform the function inspection of the fuel system. (Refer to FU - 9)
- Fuel pressure check (low-pressure side)
- D4-S inspection (power balance) [Active Test]
- Fuel pump operation check and fuel leakage check

Result

Result	Go to
Malfunction	A
Normal	B

B → Repair or replace the faulty parts.

A

Complete

81	Clear DTC

(1) Connect the SSM4 to the DLC3.
(2) Turn the ignition switch to ON.
(3) Follow the SSM4 on-screen instructions to clear the DTCs. (Refer to ES - 28)

Next

Complete

DTC	P1604	Startability Malfunction

Circuit description
When the engine does not start or it takes a long period of time to startup even though the starter signal has been input, and when the engine speed drops immediately after startup and stalls, this DTC is output.
The conditions at the time the DTC was output can be checked from the freeze frame data using the SSM4. A part of the engine running conditions under which the engine trouble occurred is recorded in the freeze frame data, which is useful for troubleshooting.
It is necessary to check the fuel level before troubleshooting because startup failure due to running out of gas can also be detected.

DTC No.	DTC detection condition	Suspected parts
P1604	When any of the following conditions is met (1 trip detection logic): •When engine speed is less than 500 r/min with the starter signal ON for a certain period of time (differs depending on engine coolant temperature and atmospheric pressure). •When engine speed drops to 300 r/min immediately after the engine is started (with engine speed 500 r/min or more).	•Engine immobilizer system •Engine ASSY (excessive wear, compression leakage) •Starter ASSY •Crankshaft position sensor •Camshaft position sensor •E.F.I. water temperature sensor •Fuel pump •Fuel pump control circuit •Fuel pipe •Fuel injector ASSY (port injection) •Throttle body •Pressure regulator •Battery •Drive plate •Spark plug •Ignition coil circuit •Intake system •Camshaft timing oil control valve ASSY •Intake air flow meter SUB-ASSY •Air / fuel ratio sensor •Valve timing •Fuel •Purge VSV •Intake valve •Exhaust valve •ECM

Refer to DTC P0102. (Refer to ES - 169)
Refer to DTC P0117. (Refer to ES - 189)
Refer to DTC P0201. (Refer to ES - 279)

Refer to DTC P0335. (Refer to ES - 308)
Refer to DTC P0340. (Refer to ES - 313)
Refer to DTC P0351. (Refer to ES - 320)
Refer to DTC P0365. (Refer to ES - 325)
Inspection steps
NOTE:

- DTC P1604 is different from existing diagnosis for parts, circuits, or system failure. When customer complains about situations such as "engine stalls" and "engine does not start", trouble phenomenon and freeze frame data will be evaluated to identify possible failure parts. DTCs may be output and detected due to operation done by the user. Therefore, unless there are customer complaints, do not perform diagnosis work but clear the codes and return the vehicle to the customer even if DTCs are present.
- If any other DTCs are present, troubleshoot the appropriate DTCs first.
- If the engine cannot be started and P1604 is not output, refer to the symptom table. (Refer to ES - 16)
- If [Immobilizer Fuel Cut] under [Data monitor] shows failure, the engine cannot be started.
- Read the freeze frame data using the SSM4. A part of the engine running conditions under which the engine trouble occurred is recorded in the freeze frame data, which is useful for troubleshooting.
- To check time-line freeze frame data, check 5 data. (Refer to ES - 28)
- If there are more than one items that are applicable to cause of trouble when time-line freeze frame data is checked, perform diagnosis procedure for all the applicable items.
- Start the engine to reproduce the conditions that are closest to those occurred at the time the trouble took place, as recorded in the freeze frame data. Check the data at that time and compare to the freeze frame data.
- Focus on looking over sign and conditions at the time the trouble took place because the conditions may not recur.
- Wiggle the appropriate wiring harness and connectors to identify trouble that may not occur constantly for a more accurate check.
- If the same check and replacement may be repeated through these steps, they may be omitted the second time.

1. Workflow of inspection steps
   (1) Freeze frame data is present but not reproducible and malfunction condition has not been identified
      (a)Engine speed in freeze frame data is 0 r/min (no cranking)
         NOTE:
         Discharged battery, excessive engine friction, starter ASSY failure, or faulty crankshaft position sensor system may be the cause.
         1. If the battery voltage is 5 V or less, a faulty battery may be the cause.
         2. If the battery voltage is less than 9 V, engine friction may be improper.
         3. If the battery voltage fluctuates during cranking, it is presumed that the engine is actually being cranked. When the engine speed is 0 r/min, faulty cranking position sensor system and the engine control computer may be the cause.

When the engine speed for all 5 sets of freeze frame data is 0 rpm:

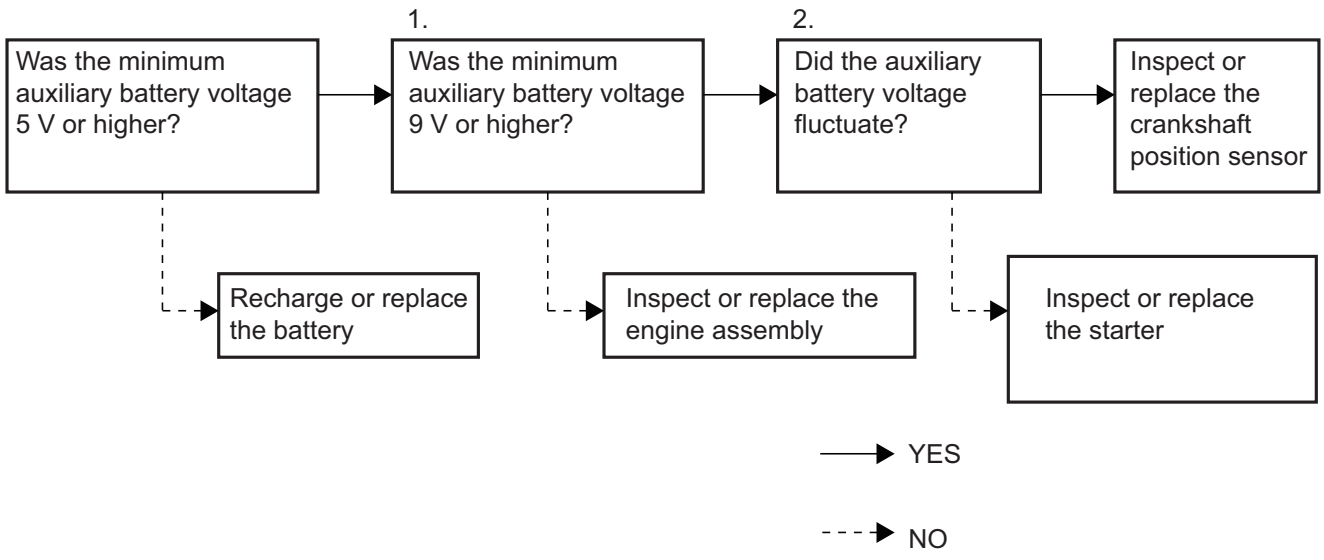

(b) Engine speed in freeze frame data is 100 to 250 r/min (engine cranks but there is no combustion)

NOTE:

When the engine speed is 100 to 250 r/min without initial combustion, faulty wiring harness or perfect failure of the ignition system/fuel system components may be the cause.

1. Malfunctioning water temperature sensor may cause excessive quantities or insufficient amount of fuel injection that can lead to startup failure.

Engine speed is between 100 and 250 rpm:

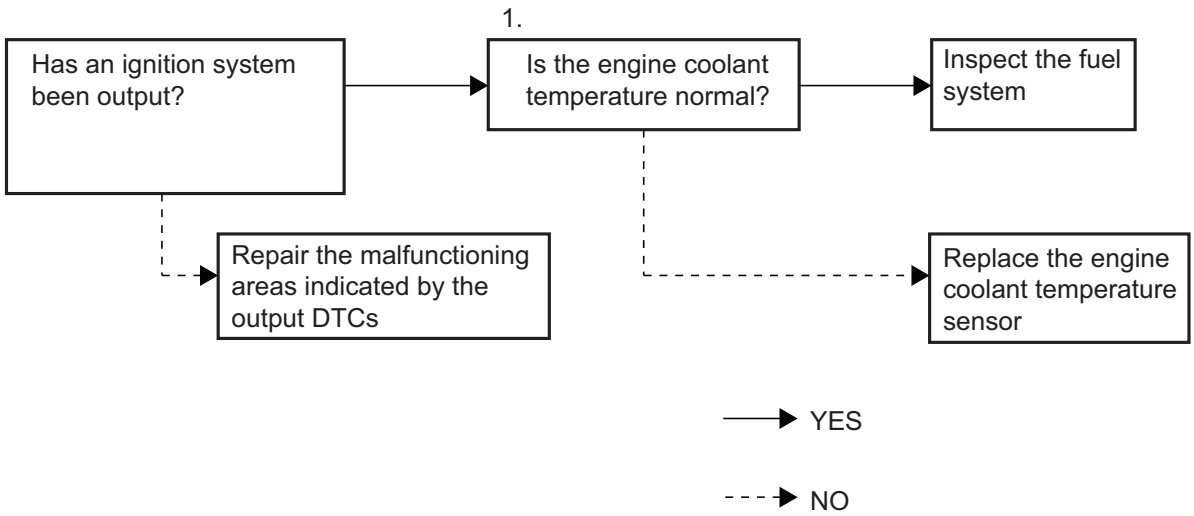

(c) Engine speed in freeze frame data is 250 r/min or more (delay in initial and completion of combustion)

NOTE:

When engine speed is 250 r/min or more (initial and completion of combustion delay), an improper amount of fuel injection (insufficient or excessive) is often the case. This can make troubleshooting difficult.

1. Malfunctioning water temperature sensor may cause excessive quantities or insufficient amount of fuel injection, which leads to startup failure
2. If the F/B learning value is out of the range, insufficient fuel supply due to clogging fuel injector ASSY (port injection side) and fuel pump (low-pressure side) may be the cause.
3. When the cranking speed is high, it may result from poor compression due to carbon buildup on valves.

Engine speed is 250 rpm or higher:

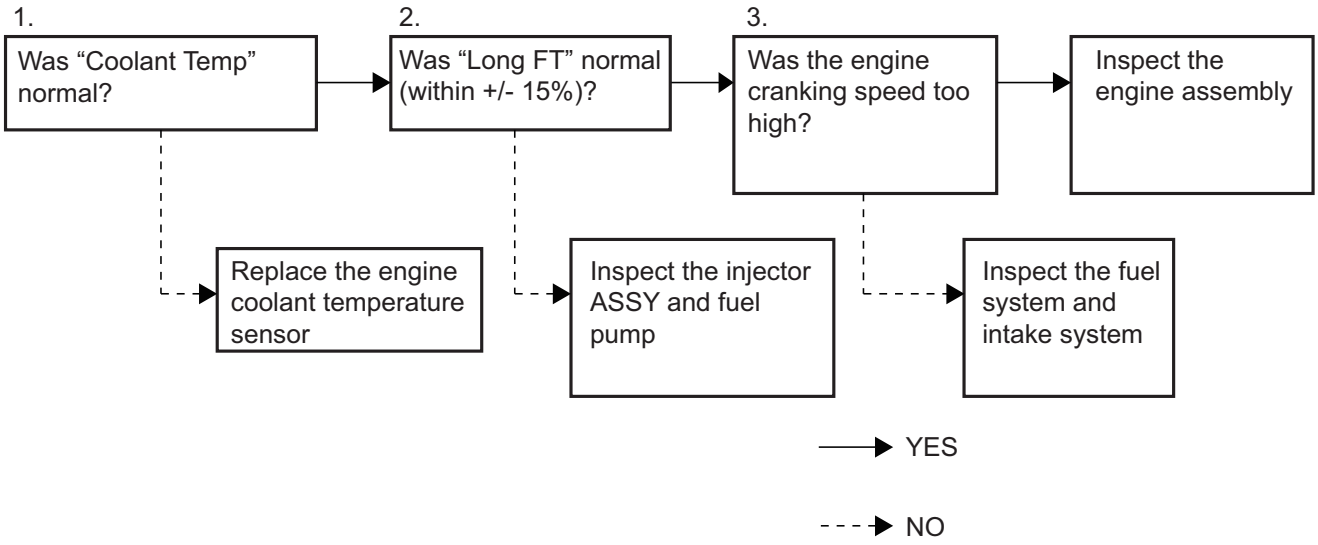

(2) Problem is reproducible or malfunction condition has been identified

When the problem is reproducible or malfunction condition has been identified, perform the diagnosis with symptom. When the cause of the problem has not been identified, perform systematic inspection.

(a)Diagnosis with symptom

1. No cranking

   NOTE:

   When the pop-up sound for the starter pinion gear is heard, the starter ASSY unit is normal. Then the possible cause is discharged battery or excessive engine friction.
2. Cranking speed error

   NOTE:

   When the cranking speed is high, it may result from poor compression due to carbon buildup on valves, etc.
3. No initial combustion

   NOTE:

   When initial combustion is not present, faulty wiring harness or ignition/fuel system failure may be the cause.
4. Engine stalls after complete combustion

   NOTE:

   If the engine stalls after a complete combustion, improper air/fuel ratio and VVT return failure may be the cause. If the engine stalls after the injection method has changed from port injection to direct injection, the injector driver may be faulty.
5. Delay in initial or complete combustion

   NOTE:

   When initial and complete combustion are delayed, improper fuel injection amount (insufficient or excessive) may be the cause.

   NOTE:

   Causes of ignition system failure based on conditions of how trouble occurs

   - Approximately 2 to 3 minutes after engine stopped: Fuel pressure drop due to failure in holding fuel pressure by the fuel pressure regulator ASSY

- Approximately 15 to 120 minutes after engine stopped: Oil-tightness failure of fuel injector ASSY (port injection side)
- A long period of time elapsed after engine stopped: Fuel pressure regulator ASSY fails to open

(b)Systematic inspection

1. Air control system
2. Ignition system
3. Fuel system

(3) Freeze frame data is present but not reproducible and malfunction condition has not been identified

Time-line freeze frame item	Result	Possible cause	Step
Engine Speed	0 r/min (no cranking at all)	• Discharged battery • Engine unit (excessive friction) • Starter system • Crankshaft position sensor system • Engine control computer	4 to 9
	100 to 250 r/min (cranks but no initial combustion *1)	• Fuel pump control system (low-pressure side) • Ignition system • E.F.I. water temperature sensor • Fuel injector ASSY (port injection side) system	10 to 14
	250 r/min or more (there is combustion but initial and complete combustion *2 delay)	• Engine unit (compression drops) • Fuel injector ASSY (port injection side) system • Fuel pump control system (low-pressure side) • E.F.I. water temperature sensor • Fuel pressure regulator ASSY • Throttle body ASSY (with motor) • Intake system connections	15 to 23

NOTE:

- *1: First combustion after cranking
- *2: When the engine speed increases and the starter ASSY is allowed to disengage

(4) Problem is reproducible or malfunction condition has been identified

(a)Diagnosis with symptom

Trouble phenomenon	Possible cause	Step
No cranking	• Discharged battery • Starter ASSY (including worn or chipped pinion ring) • Starter system • Engine unit (excessive friction) • Chipped flywheel teeth (transmission M/T) • Worn or chipped drive plate/ring gear SUB-ASSY (transmission A/T)	26 to 31
Cranking speed error	• Discharged battery • Starter ASSY • Engine unit (excessive friction, compression drop)	32 to 34
No initial combustion	• Fuel pressure holding by fuel pressure regulator ASSY • Fuel injector ASSY (port injection side) leakage • Fuel injector ASSY (port injection side) system • Fuel leakage from fuel line • Fuel pump control system (low-pressure side) • Fuel pump (low-pressure side) • Spark plug • Crankshaft position sensor system • Ignition coil ASSY system	35 to 49

Trouble phenomenon	Possible cause	Step
Engine stalls after complete combustion*	• Intake system connections • Throttle body ASSY (with motor) • Camshaft timing oil control valve ASSY • Intake air flow meter SUB-ASSY system	50 to 56
Delay in initial or complete combustion	• E.F.I. water temperature sensor • Intake air flow meter SUB-ASSY • Air / fuel ratio sensor • Fuel injector ASSY (Port injection side) • Vacuum switching valve ASSY system • Spark plug • Fuel pressure regulator ASSY • Fuel pump (low-pressure side) • Fuel pump control system (low-pressure side)	57 to 71

ES

* If the engine stalls immediately after the injection method has changed from port injection to direct injection, the injector driver may be faulty.

(b)Systematic inspection

Systematic troubleshooting	Possible cause	Step
Fuel system A	• Fuel injector ASSY (Port injection side) • Fuel • Crankshaft position sensor system • Fuel leakage from fuel line • Fuel pump (low-pressure side) • Fuel pressure regulator ASSY	87 to 94 95 to 102
Fuel system B	• Vacuum switching valve ASSY system • Fuel injector ASSY (Port injection side) • Intake valve	103 to 105
Fuel system C	• Fuel injector ASSY (port injection side) system • Crankshaft position sensor • Camshaft position sensor • Engine control computer	73 to 76
Air control system	• Engine unit (compression drops) • Valve timing • E.F.I. water temperature sensor • Engine control computer	84 to 86 106 to 108
Ignition system	• Crankshaft position sensor system (with sensor installation) • Camshaft position sensor system (with sensor installation) • Engine control computer	77 to 83 109 to 115

NOTE:

- Bank 1 shows the side where No. 1 cylinder is located.
- Bank 2 shows the side where No. 2 cylinder is located.

1	Read DTC

(1) Connect the SSM4 to the DLC3.
(2) Turn the ignition switch to ON.
(3) Follow the SSM4 on-screen instructions to check the DTC. (Refer to ES - 28)

Result

Result	Go to
Only P1604 is output.	A
Diagnostic codes other than P1604 are also output.	B

NOTE:
If any DTCs other than P1604 are output, troubleshoot them first.

B → To corresponding DTC chart (refer to ES - 12)

A

2	Engine immobilizer system check

(1) Check the engine immobilizer system.
- Models with smart entry & start system (Refer to TD - 237)
- Models without smart entry & start system (Refer to TD - 277)

NG → Engine immobilizer system repair

OK

3	Check trouble phenomenon

(1) Check the trouble phenomenon.

Result

Result	Go to
The freeze frame data has been input but trouble phenomenon is not reproducible and malfunction condition has not been identified.	A
Problem is reproducible or malfunction condition has been identified.	B

B → Go to Step 25.

A

4	Check freeze frame data ([Engine Speed], [Control module voltage])

(1) Connect the SSM4 to the DLC3.
(2) Turn the ignition switch to ON.
(3) Follow the SSM4 on-screen instructions and use time-line freeze frame data to check vehicle conditions at the time the DTCs are detected. (Refer to ES - 28)

Result

Time-line freeze frame data item		Possible cause	Go to
[Engine Speed]	[Control module voltage]		
All are 0 r/min (no cranking at all)	Minimum voltage is less than 5 V.	Discharged battery	A
	Minimum voltage is 5 V or more.	• Starter ASSY failure • Crankshaft position sensor system • Excessive engine friction • Engine control computer	B
100 to 250 r/min (cranks but no initial combustion)	-	• Fuel pump control system (low-pressure side) • Ignition system • E.F.I. water temperature sensor • Fuel injection system	C
250 r/min or more (there is combustion but initial and complete combustion delay)	-	• Engine unit • Fuel injection system • Fuel pump control system (low-pressure side)	D

NOTE:
When P1604 is output, either [Starting time of engine failure history]*1 or [Low Rev for Eng Start]*2 in the freeze frame data is switched ON.
When [Low Rev for Eng Start] is switched ON, go to E.
*1: [Starting time of engine failure history] is switched ON when engine speed does has not reached the specified speed within the specified time period when the engine started.
*2: When [Low Rev for Eng Start] is ON, check the following freeze frame data items because operation done by the user may cause the engine to slow down and stall after the engine starts.
- [Immobilizer Fuel Cut]
- [Engine Speed (Starter Off)]
- Gear signal

B	Go to Step 5.
C	Go to Step 10.
D	Go to Step 15.
E	Go to Step 50.

A

Battery charging or replacement

5	Check freeze frame data ([Control module voltage])

(1) Connect the SSM4 to the DLC3.
(2) Turn the ignition switch to ON.
(3) Follow the SSM4 on-screen instructions and use time-line freeze frame data to check vehicle conditions at the time the DTCs are detected. (Refer to ES - 28)

Result

Time-line freeze frame data item	Result	Possible cause	Go to
[Control module voltage]	Minimum voltage is 9 V or more and voltage fluctuations occur. *2 and *3	• Crankshaft position sensor system • Engine control computer	A
	Minimum voltage is 9 V or more and voltage fluctuations do not occur. *1	Starter system (models with smart entry & start system)	B
		Starter system (models without smart entry & start system)	C
	Minimum voltage is 5 to 9 V. *4	Excessive engine friction	D

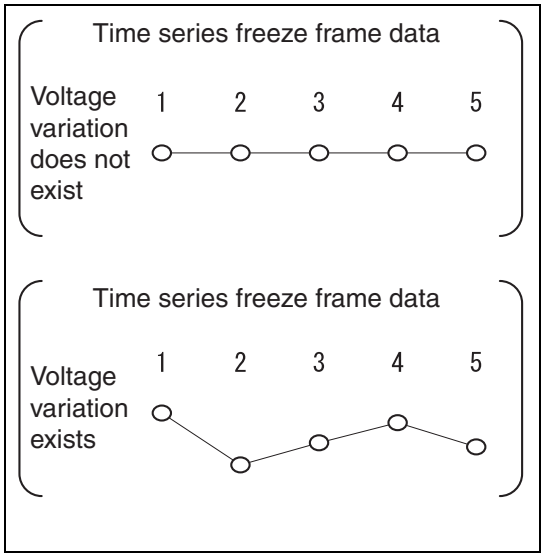

NOTE:
- *1: 5 data of [Control module voltage] in the freeze frame data are almost the same.
- *2: 5 data of [Control module voltage] in the freeze frame data vary.
- *3: If the voltage varies, it is presumed that the cranking goes on properly. When the engine speed is 0 r/min, faulty cranking position sensor system and the engine control computer may be the cause.
- *4: Because excessive engine friction is suspected, rotate the crankshaft manually to check if it turns smoothly. Also, because excessive engine friction may have been only a temporal condition, remove the cylinder covers and oil pan and check for foreign materials such as iron chips. Carefully inspect or disassemble parts and inspect them if failure or symptom of trouble is found.

ES

B → Starter system check (models with smart entry & start system) (Refer to ES - 610)

C → Starter system check (models without smart entry & start system) (Refer to ES - 620)

D → Check and repair engine unit

A

6	Sensor installation area check (crankshaft position sensor)

(1) Check the tightening condition of the crankshaft position sensor bolt and installation condition of the sensor.
(2) Check installation conditions of the crankshaft position sensor connector.
Criteria: Properly installed.

NG → Repair or replacement of sensor installation area

OK

7	Crankshaft position sensor check

(1) Disconnect the crankshaft position sensor connector.
(2) Make sure that the connector terminals are free of oil.
Criteria: Terminals are free of oil.

NG → Replacement of crankshaft position sensor (Refer to ES - 681)

OK

8	Check wiring harness and connector (engine control computer - crankshaft position sensor)

NOTE:
For the inspection procedure and precautions for wiring harnesses and connectors, refer to IN - 36.
(1) Disconnect the connector for the engine control computer.
(2) Disconnect the crankshaft position sensor connector.

(3) Measure the resistance between the terminals. (For terminal arrangement, refer to ES - 36.)

Resistance (open circuit check)

Inspection terminals	Inspection conditions	Standard value
A34-16(NE+) - C47-1(OUT)	Always	Less than 1 Ω
A34-27(NE-) - C47-2(GND)	Always	Less than 1 Ω
A36-19(VC) - C47-3(VCC)	Always	Less than 1 Ω

ES

Resistance (short circuit check)

Inspection terminals	Inspection conditions	Standard value
A34-16 (NE+) and C47-1 (OUT) - other terminals and chassis ground	Always	10 k Ωor more
A34-27 (NE-) and C47-2 (GND) - other terminals and chassis ground	Always	10 k Ωor more
A36-19(VC) - C47-3(VCC)	Always	10 k Ωor more

NOTE:
- Wiggle the wiring harness and connectors to identify trouble that may not occur constantly for a more accurate check.
- Make sure an excessive tension is not placed on the wiring harness.

NG → Repair or replacement of wiring harness or connector

OK

9	Crankshaft position sensor check

(1) Replace the crankshaft position sensor and check if the trouble is solved.

NOTE:
- Replacement of crankshaft position sensor (Refer to ES - 681)

Result

Result	Go to
Trouble is solved.	A
Trouble is not solved.	B

B → Replacement of the engine control computer (Refer to ES - 670)

A

Complete (trouble caused by crankshaft position sensor)

10	Check freeze frame data ([Coolant Temp.], [Ambient Temperature], [Intake Air Temp.], [Control the Fuel Pump Duty])

(1) Connect the SSM4 to the DLC3.
(2) Turn the ignition switch to ON.
(3) Follow the SSM4 on-screen instructions and use time-line freeze frame data to check vehicle conditions at the time the DTCs are detected. (Refer to ES - 28)

Result

Time-line freeze frame data item			Possible cause	Go to
[Coolant Temp.], [Ambient Temperature], [Intake Air Temp.]	[Coolant Temp.], [Ambient Temperature]	[Control the Fuel Pump Duty]		
Difference in temperature between [Coolant Temp.], [Ambient Temperature], and [Intake Air Temp.] is 10°C {18°F} or more.*1	[Coolant Temp.] is 125°C {257°F} or more, or at least 15°C {27°F} lower than [Ambient Temperature].	-	E.F.I. water temperature sensor	A
	Other than above	60% or more	-	B
		Less than 60%	Fuel pump control system (low-pressure side)	C
Difference in temperature between [Coolant Temp.], [Ambient Temperature], and [Intake Air Temp.] is less than 10°C {18°F}.*2	-	Less than 60%	Fuel pump control system (low-pressure side)	C
		60% or more	-	B

NOTE:
- *1: Only short period of time has elapsed after engine was stopped.
- *2: A long period of time has elapsed after engine was stopped.

B → Go to Step 11.

C → Inspection of fuel pump control system (low-pressure side) (Refer to ES - 602)

A

Replacement of E.F.I. water temperature sensor (Refer to ES - 695)

11	Performing of SSM4 [Active Test] ([Control the Fuel Pump Duty])

(1) Connect the SSM4 to the DLC3.
(2) Turn the ignition switch to ON.
(3) Select the following menu items using the SSM4. : [Each System] / [Engine Control System] / [Work Support] / [Active Test] / [Control the Fuel Pump Duty]
(4) In [Active Test], check operation noise of the fuel pump (low-pressure side).

Criteria

[Control the Fuel Pump Duty]	Criteria
80%	Operating sound is heard.

NOTE:
Wiggle the wiring harness and connectors to identify trouble that may not occur constantly for a more accurate check.

NG → Inspection of fuel pump control system (low-pressure side) (Refer to ES - 602)

OK

12	Engine control computer check (fuel injector ASSY (port injection side) power voltage)

NOTE:
For the inspection procedure and precautions for wiring harnesses and connectors, refer to IN - 36.

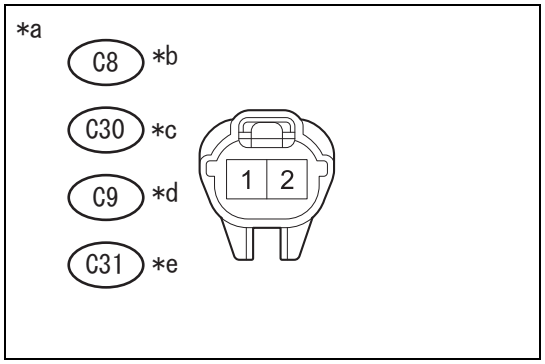

(1) Disconnect the connector for the fuel injector ASSY.
(2) Turn the ignition switch to ON.
(3) Measure the voltage between terminals.

Voltage

Inspection terminals	Inspection conditions	Standard value
C8-1 - chassis ground	IG ON	11 to 14 V
C30-1 - chassis ground	IG ON	11 to 14 V
C9-1 - chassis ground	IG ON	11 to 14 V
C31-1 - chassis ground	IG ON	11 to 14 V

Captions in illustration

*a	Front side of vehicle wiring harness connector (fuel injector ASSY (port injection side) connectors)
*b	No. 1 cylinder
*c	No. 2 cylinder
*d	No. 3 cylinder
*e	No. 4 cylinder

NOTE:
- Wiggle the wiring harness and connectors to identify trouble that may not occur constantly for a more accurate check.
- Make sure an excessive tension is not placed on the wiring harness.

NG → Power supply circuit check (fuel injector ASSY (port injection side)) (Refer to ES - 633)

OK

13	Performing of SSM4 [Active Test] ([Control the Fuel Pump Duty])

(1) Connect the SSM4 to the DLC3.
(2) Turn the ignition switch to ON.
(3) Select the following menu items using the SSM4. : [Each System] / [Engine Control System] / [Work Support] / [Active Test] / [Control the Fuel Pump Duty]
(4) In active test, check for fuel leakage from the fuel piping with 80% of fuel pump duty cycle.

Result

Result	Go to
There is fuel leakage, or symptom or trace of fuel leakage.	A
There is neither actual fuel leakage, symptom of leakage, nor trace of leakage.	B

NOTE:
- Wiggle the wiring harness and connectors to identify trouble that may not occur constantly for a more accurate check.
- In [Active Test], if operating sound of the fuel pump (low-pressure side) is not heard, failure in fuel pump system is suspected.
- It is necessary to check the fuel level because startup failure due to running out of gas can also be detected.

B → Go to Step 14.

A

Repair or replacement of fuel piping

14	Fuel system check

(1) Check the area around the fuel pump (low-pressure side) (fuel pump itself, fuel pump filter, and inside the fuel tank ASSY) for an inclusion of foreign materials such as iron chips, and also check the fuel pump (low-pressure side) for any evidence of foreign material intrusion.

Result

Result	Go to
Foreign materials or any evidence of catching them are present	A
Neither foreign materials nor an evidence of catching them	B

B → Go to Step 24.

A

Repair or replacement of fuel system

15	Check freeze frame data ([Coolant Temp.], [Ambient Temperature], [Intake Air Temp.], [Long term fuel trim B1], [Engine Speed])

(1) Connect the SSM4 to the DLC3.
(2) Turn the ignition switch to ON.
(3) Follow the SSM4 on-screen instructions and use time-line freeze frame data to check vehicle conditions at the time the DTCs are detected. (Refer to ES - 28)

Result

Time-line freeze frame data item				Possible cause	Go to
[Coolant Temp.], [Ambient Temperature], [Intake Air Temp.]	[Coolant Temp.], [Ambient Temperature]	[Long term fuel trim B1]	[Engine Speed]		
Difference in temperature between [Coolant Temp.], [Ambient Temperature], and [Intake Air Temp.] is 10°C {18°F} or more.	[Coolant Temp.] is 125°C {257°F} or more, or at least 15°C {27°F} lower than [Ambient Temperature].	-	-	• E.F.I. water temperature sensor	A
	Other than above	-15 % or less or +15 % or more	-	• Fuel pump control system (low-pressure side) • Fuel injector ASSY (Port injection side)	B
		-15 to +15%	Minimum engine speed is 300 r/min or more. *1	• Engine unit	C
			Minimum engine speed is less than 300 r/min.	• Fuel system • Intake air system	D
Difference in temperature between [Coolant Temp.], [Ambient Temperature], and [Intake Air Temp.] is less than 10°C {18°F}.	-	-15 % or less or +15 % or more	-	• Fuel pump control system (low-pressure side) • Fuel injector ASSY (Port injection side)	B
		-15 to +15%	Minimum engine speed is 300 r/min or more. *1	• Engine unit	C
			Minimum engine speed is less than 300 r/min.	• Fuel system • Intake air system	D

NOTE:
*1: Compression leakage in the engine unit is suspected.

B → Go to Step 16.

C → Check and repair engine unit

D → Go to Step 18.

A

Replacement of E.F.I. water temperature sensor (Refer to ES - 695)

16	Inspection of the fuel injector ASSY (port injection side)

(1) Check that fuel injector ASSY (port injection side) is free of carbon.
Criteria: Carbon adhesion is not found.

NG → Replacement of the fuel injector ASSY (port injection side) (Refer to FU - 21)

OK

17	Fuel system check

(1) Check the area around the fuel pump (low-pressure side) (fuel pump itself, fuel pump filter, and inside the fuel tank ASSY) for an inclusion of foreign materials such as iron chips, and also check the fuel pump (low-pressure side) for any evidence of foreign material intrusion.

Result

Result	Go to
Foreign materials or any evidence of catching them are present	A
Neither foreign materials nor an evidence of catching them	B

B → Go to Step 24.

A

Repair or replacement of fuel system

18	Check freeze frame data ([Coolant Temp.])

(1) Connect the SSM4 to the DLC3.
(2) Turn the ignition switch to ON.
(3) Follow the SSM4 on-screen instructions and use time-line freeze frame data to check vehicle conditions at the time the DTCs are detected. (Refer to ES - 28)

Result

Time-line freeze frame data item	Result	Possible cause	Go to
[Coolant Temp.]	Engine coolant temperature is 40°C {104°F} or less. *1	Fuel pressure regulator ASSY	A
	Engine coolant temperature is 40 to 90°C {104 to 194°F}. *2	Fuel injector ASSY (Port injection side)	B
	Engine coolant temperature is 90°C {194°F} or more. *3	Fuel pressure regulator ASSY	A

NOTE:
*1: If the engine coolant temperature is 40°C {104°F} or less (a long period of time has elapsed after engine stopped), the fuel pressure regulator ASSY may be stuck open. Install a fuel pressure gauge and check pressure-holding ability after engine is stopped.
*2: If the engine coolant temperature is 40 to 90°C {104 to 194°F} (approximately 15 to 120 minutes elapsed after engine stopped), fuel leakage from the fuel injector ASSY (port injection side) is suspected.
*3: If the engine coolant temperature is 90°C {194°F} or more (approximately 2 to 5 minutes have elapsed after engine stopped), a failure in fuel pressure-holding ability of the fuel pressure regulator ASSY is suspected. Install a fuel pressure gauge and check pressure-holding ability after engine is stopped.

B → Go to Step 20.

A

19	Fuel pressure inspection (low-pressure side)

(1) Attach a fuel pressure gauge and check fuel pressure (low-pressure side) after engine is stopped. (Refer to FU - 9)
Criteria: 147 kPa {1.5 kgf/cm^2, 21.3 psi} or more (5 minutes after engine is stopped)

NOTE:
If the engine cannot be started, read the value after cranking.

ES

Result

Result	Go to
Malfunction	A
Normal	B

B → Go to Step 24.

A

Replacement of fuel pressure regulator ASSY (Refer to FU - 47)

20	Fuel injector ASSY check (HC content on port injection side)

(1) Stop the engine and purge inside the intake air surge tank ASSY with pressurized air.
(2) Wait for 15 minutes and measure HC content inside the intake air surge tank ASSY.

Result

Result	Go to
4000 ppm or more	A
Less than 4000 ppm	B

NOTE:
When HC content is 4000 ppm or more, air-tightness failure of fuel injector ASSY (port injection side) is suspected.

B → Go to Step 22.

A

21	Fuel injector ASSY unit inspection (port injection side)

(1) Perform a unit inspection on the fuel injector ASSY (port injection side). (Refer to FU - 29)

Result

Result	Go to
Malfunction	A
Normal	B

B → Go to Step 22.

A

Replacement of the fuel injector ASSY (port injection side) (Refer to FU - 21)

22	Throttle body ASSY (with motor) check

(1) Check the air passage for carbon buildup.

Result

Result	Go to
Carbon buildup on intake valves.	A
Intake valves are free of carbon.	B

B → Go to Step 23.

A

Replacement of throttle body ASSY (with motor) (Refer to ES - 666)

23	Intake system check (connection)

(1) Make sure there is no air leakage (from disconnected hoses, cracks, gaskets) at each part of the intake system. (Refer to IE - 4)
NOTE:
- Present of air leakage can be easily checked by racing the engine then releasing the accelerator pedal completely because this creates high vacuum that leads to large air induction noise.
- Air may be leaking (sucked in) if F/B correction value #1 and F/B learning value #1 show a larger difference between idling time (smaller mass air flow) and the normal time, and a smaller difference between racing time (larger mass air flow) and the normal time.

Criteria: Air induction is not present.

NG → Repair or replacement of intake system

OK

24	Check trouble phenomenon

(1) Check if the engine can be started.

Result

Result	Go to
Engine starts.	A
Engine does not start.	B

B → Go to Step 25.

A

Complete

25	Check trouble phenomenon

(1) Check the trouble phenomenon.

ES

Result

Trouble phenomenon	Possible cause	Go to
No cranking	• Discharged battery • Starter ASSY (including worn or chipped pinion ring) • Starter system • Engine unit (excessive friction) • Chipped flywheel teeth (M/T models) • Worn or chipped drive plate/ring gear SUB-ASSY (transmission A/T)	A
Cranking speed error	• Discharged battery • Starter ASSY • Engine unit (excessive friction, compression drop)	B
No initial combustion (no single combustion during cranking) *1	• Fuel pressure holding by fuel pressure regulator ASSY • Fuel injector ASSY (port injection side) leakage • Fuel leakage from fuel line • Fuel pump control system (low-pressure side) • Fuel pump (low-pressure side) • Spark plug • Crankshaft position sensor system • Ignition coil ASSY system	C
Engine stalls after complete combustion (stalls immediately after engine speed increases once) *2	• Intake system connections • Throttle body ASSY (with motor) • Camshaft timing oil control valve ASSY • Intake air flow meter SUB-ASSY	D
Delay in initial or complete combustion *3	• E.F.I. water temperature sensor • Intake air flow meter SUB-ASSY • Air / fuel ratio sensor • Fuel injector ASSY (Port injection side) • Vacuum switching valve ASSY system • Spark plug • Fuel pressure regulator ASSY • Fuel pump (low-pressure side) • Fuel pump control system (low-pressure side)	E

NOTE:

- If the engine hesitates during the initial stage of cranking (cranking speed is slow and combustion occurs at BTDC), an insufficiently charged battery or faulty starter ASSY may be the cause.
- *1: If there is no initial combustion, faulty wiring harness, ignition system, or fuel system is suspected.
- *2: If the engine stalls after a complete combustion, an improper air/fuel ratio or a case where camshaft timing oil control valve ASSY fails to return may be the cause. If the engine stalls after the injection method has changed from port injection to direct injection, the injector driver may be faulty.
- *3: When initial and complete combustion are delayed, improper fuel injection amount (insufficient or excessive) may be the cause.

B → Go to Step 32.

C → Go to Step 35.

D → Go to Step 50.

E → Go to Step 57.

A

ES

26	Check trouble phenomenon

(1) During cranking, check that the pop-up sound for the starter pinion gear is heard, and check the starter ASSY for spinning.

Result

Trouble symptom	Possible cause	Go to
The pop-up sound for the starter pinion gear is heard, and the starter ASSY is not spinning. *1	• Battery • Excessive engine friction • Starter ASSY	A
The pop-up sound for the starter pinion gear is heard, and the starter is spinning.	• Drive plate/ring gear SUB-ASSY • Starter ASSY	B
The pop-up sound for the starter pinion gear is not heard.	• Battery • Starter ASSY • Starter system	C

NOTE:
*1: Discharged battery or excessive engine friction are suspected.

B → Go to Step 29.

C → Go to Step 30.

A

27	Battery unit check

(1) Perform unit inspection of battery. (Refer to BH - 3)

NG → Battery charging or replacement

OK

28	Engine unit check

(1) Rotate the crankshaft manually and make sure it turns smoothly.
Criteria: Rotates smoothly.

NOTE:
Because excessive engine friction may have been only a temporal condition, remove the cylinder covers and oil pan and check for foreign materials such as iron chips. Carefully inspect or disassemble parts and inspect them if failure or symptom of trouble is found.

NG → Engine unit repair or replacement

OK

Starter ASSY unit check (Refer to ST - 27)

29	Starter ASSY check (pinion gear)

(1) Remove the starter ASSY. (Refer to ST - 21)
(2) Make sure that the pinion gear of the starter ASSY is not worn nor chipped.
Criteria: Not worn or chipped.

Result

Result	Go to
Malfunction	A
Normal (Transmission M/T)	B
Normal (Transmission A/T)	C

B → Replacement of flywheel SUB-ASSY (Refer to EM - 53)

C → Replacement of drive plate & ring gear SUB-ASSY (Refer to EM - 75)

A

Replacement of starter ASSY (Refer to ST - 21)

30	Battery unit check

(1) Perform unit inspection of battery. (Refer to BH - 4)

NG → Battery charging or replacement

OK

31	Starter ASSY unit inspection

(1) Perform unit inspection of the starter ASSY. (Refer to ST - 27)

Result

Result	Go to
Malfunction	A
Normal (models with smart entry & start system)	B
Normal (models without smart entry & start system)	C

B → Starter system check (models with smart entry & start system) (Refer to ES - 610)

C → Starter system check (models without smart entry & start system) (Refer to ES - 620)

A

Replacement of starter ASSY (Refer to ST - 21)

32	Check trouble phenomenon

(1) Check cranking speed.

Result

Trouble symptom	Probable cause	Go to
Low cranking speed (100 r/min or less)	• Battery • Starter ASSY • Excessive engine friction	A
High cranking speed (300 r/min or more) *1	Engine compression drop	B

NOTE:
*1: When the cranking speed is high, a drop in compression is suspected.

B → Check and repair engine unit

A

33	Battery unit check

(1) Perform unit inspection of battery. (Refer to BH - 3)

NG → Battery charging or replacement

OK

34	Engine unit check

(1) Rotate the crankshaft manually and make sure it turns smoothly.
Criteria: Rotates smoothly.
NOTE:
Because excessive engine friction may have been only a temporal condition, remove the cylinder covers and oil pan and check for foreign materials such as iron chips. Carefully inspect or disassemble parts and inspect them if failure or symptom of trouble is found.

NG → Engine unit repair or replacement

OK

Starter ASSY unit check (Refer to ST - 27)

35	Fuel injector ASSY check (checking operation sound of port injection side)

(1) Using a stethoscope or screw driver, check the operation sound of the fuel injector ASSY (port injection side) during cranking.
Criteria: Operation sound of fuel injector ASSY (port injection side) is heard.

NG → Go to Step 48.

OK

36	Fuel pressure inspection (low-pressure side)

(1) Check the fuel (low-pressure side). (Refer to FU - 9)

NG → Go to Step 46.

OK

37	Spark Inspection

(1) Check for spark. (Refer to ES - 653)

NG → Go to Step 41.

OK

38	Check trouble phenomenon

(1) Check the trouble phenomenon based on interview done to the customer.

Result

Trouble phenomenon	Probable defective parts	Go to
Startup failure occurs when a long period of time elapsed after engine is stopped. *1	Fuel pressure regulator ASSY is stuck open.	A
Startup failure occurs between approximately 15 minutes and 120 minutes after engine is stopped. *2	Fuel injector ASSY (port injection side) leakage	B
Startup failure occurs between approximately 2 minutes and 3 minutes after engine is stopped. *3	Failure in fuel pressure holding by fuel pressure regulator ASSY	A
Inconsistency in conditions of problems other than those mentioned above and startup failure	-	C*4

NOTE:
*1: Stuck opened fuel pressure regulator ASSY is suspected. Install a fuel pressure gauge and check pressure-holding ability after engine is stopped.
*2: Fuel leak from the fuel injector ASSY (port injection side) is suspected.
*3: Failure in fuel pressure-holding ability of the fuel pressure regulator ASSY is suspected. Install a fuel pressure gauge and check pressure-holding ability after engine is stopped.
*4: From step 72, check the fuel system troubleshooting C (steps 73 through 76).

B → Go to Step 40.

C → Go to Step 72.

A

39	Fuel pressure inspection (low-pressure side)

(1) Attach a fuel pressure gauge and check fuel pressure (low-pressure side) after engine is stopped. (Refer to FU - 9)

Result

Result (fuel pressure)	Go to
Less than 147 kPa {1.5 kgf/cm^2, 21.3 psi} (5 minutes after engine is stopped)	A
147 kPa {1.5 kgf/cm^2, 21.3 psi} or more (5 minutes after engine is stopped)	B*1

NOTE:
- If the engine cannot be started, check the fuel pressure (low-pressure side) after cranking.
- *1: From step 72, check fuel system troubleshooting C (steps 73 through 76).

B → Go to Step 72.

A

Replacement of fuel pressure regulator ASSY (Refer to FU - 47)

40	Fuel injector ASSY check (HC content on port injection side)

(1) Stop the engine and purge inside the intake air surge tank ASSY with pressurized air.
(2) Wait for 15 minutes and measure HC content inside the intake air surge tank ASSY.

Result

Result	Go to
4000 ppm or more	A
Less than 4000 ppm	B*1

NOTE:
- When HC content is 4000 ppm or more, air-tightness failure of fuel injector ASSY (port injection side) is suspected.
- *1: From step 72, check fuel system troubleshooting C (steps 73 through 76).

B → Go to Step 72.

A

Replacement of the fuel injector ASSY (port injection side) (Refer to FU - 21)

41	Spark plug inspection

(1) Inspect the spark plug. (Refer to ES - 658)
NOTE:
The spark plugs must be replaced for all cylinders even if failure is found in a single cylinder only.

NG → Spark plug replacement (Refer to ES - 687)

OK

42	Reading of SSM4 data ([Engine Speed])

(1) Connect the SSM4 to the DLC3.
(2) Start the engine.
(3) Select the following menu items using the SSM4. : [Each System] / [Engine Control System] / [Data monitor] / [Engine Speed]
(4) Read the value of [Engine Speed] while the engine is running.
Criteria: Values corresponding to the engine speed are output continuously.

NOTE:
- Check the engine speed on the line graph display.
- If the engine cannot be started, check the cranking speed.
- If the engine speed is zero, open or short circuit in the crankshaft position sensor may occur.

NG → Crankshaft position sensor system check (Refer to ES - 306)

OK

43	Check wiring harness and connector (ignition coil ASSY power supply circuit)

NOTE:
For the inspection procedure and precautions for wiring harnesses and connectors, refer to IN - 36.

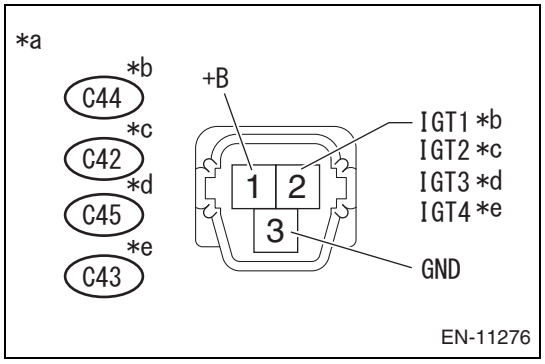

(1) Disconnect the connector of the ignition coil ASSY.
(2) Turn the ignition switch to ON.
(3) Measure the voltage between the terminals.

Voltage

Inspection terminals	Inspection conditions	Standard value
C44-1 (+B) - chassis ground	IG ON	11 to 14V
C42-1 (+B) - chassis ground	IG ON	11 to 14V
C45-1 (+B) - chassis ground	IG ON	11 to 14V
C43-1 (+B) - chassis ground	IG ON	11 to 14V

Captions in illustration

*a	Front side of vehicle wiring harness connector (ignition coil ASSY connector)
*b	No. 1 cylinder
*c	No. 2 cylinder
*d	No. 3 cylinder
*e	No. 4 cylinder

NOTE:
- Wiggle the wiring harness and connectors to identify trouble that may not occur constantly for a more accurate check.
- Make sure an excessive tension is not placed on the wiring harness.

NG → Power supply circuit check (ignition coil ASSY power supply circuit) (Refer to ES - 317)

OK

44	Check wiring harness and connector (engine control computer - ignition coil ASSY)

NOTE:
For the inspection procedure and precautions for wiring harnesses and connectors, refer to IN - 36.

(1) Disconnect the connector for the engine control computer.
(2) Disconnect the connector of the ignition coil ASSY.
(3) Measure the resistance between the terminals. (For terminal arrangement, refer to ES - 36.)

Resistance (open circuit check)

Inspection terminals	Inspection conditions	Standard value
A36-21 (IGT1) - C44-3 (IGT1)	Always	Less than 1 Ω
A36-10 (IGT2) - C42-3 (IGT2)	Always	Less than 1 Ω
A36-31 (IGT3) - C45-3 (IGT3)	Always	Less than 1 Ω
A36-8 (IGT4) - C43-3 (IGT4)	Always	Less than 1 Ω

Resistance (short circuit check)

Inspection terminals	Inspection conditions	Standard value
A36-21 (IGT1) and C44-3 (IGT1) - other terminals and chassis ground	Always	10 k Ωor more
A36-10 (IGT2) and C42-3 (IGT2) - other terminals and chassis ground	Always	10 k Ωor more
A36-31 (IGT3) and C45-3 (IGT3) - other terminals and chassis ground	Always	10 k Ωor more
A36-8 (IGT4) and C43-3 (IGT4) - other terminals and chassis ground	Always	10 k Ωor more

NOTE:
- Wiggle the wiring harness and connectors to identify trouble that may not occur constantly for a more accurate check.
- Make sure an excessive tension is not placed on the wiring harness.

NG → Repair or replacement of wiring harness or connector

OK

45	Check wiring harness and connector (ignition coil ASSY - chassis ground)

NOTE:
For the inspection procedure and precautions for wiring harnesses and connectors, refer to IN - 36.

(1) Disconnect the connector of the ignition coil ASSY.
(2) Measure the resistance between the terminals.

Resistance (open circuit check)

Inspection terminals	Inspection conditions	Standard value
C44-2 (GND) - chassis ground	Always	Less than 1 Ω
C42-2 (GND) - chassis ground	Always	Less than 1 Ω

Inspection terminals	Inspection conditions	Standard value
C45-2 (GND) - chassis ground	Always	Less than 1 Ω
C43-2 (GND) - chassis ground	Always	Less than 1 Ω

NOTE:
- Wiggle the wiring harness and connectors to identify trouble that may not occur constantly for a more accurate check.
- Make sure an excessive tension is not placed on the wiring harness.
- When the wiring harness is normal, replace the ignition coil ASSY then check if startup failure recurs. If it recurs, go to step 72 and check ignition system troubleshooting (steps 77 through 83).

NG → Repair or replacement of wiring harness or connector

OK

Replacement of ignition coil ASSY (Refer to ES - 687)

46	Performing of SSM4 [Active Test] ([Control the Fuel Pump Duty])

(1) Connect the SSM4 to the DLC3.
(2) Turn the ignition switch to ON.
(3) Select the following menu items using the SSM4. : [Each System] / [Engine Control System] / [Work Support] / [Active Test] / [Control the Fuel Pump Duty]
(4) In [Active Test], check operation noise of the fuel pump (low-pressure side) with 80% of [Control the Fuel Pump Duty].

Criteria

[Control the Fuel Pump Duty]	Criteria
80%	Operating sound is heard.

NOTE:
Wiggle the wiring harness and connectors to identify trouble that may not occur constantly for a more accurate check.

NG → Inspection of fuel pump control system (low-pressure side) (Refer to ES - 602)

OK

47	Performing of SSM4 [Active Test] ([Control the Fuel Pump Duty])

(1) Connect the SSM4 to the DLC3.
(2) Turn the ignition switch to ON.
(3) Select the following menu items using the SSM4. : [Each System] / [Engine Control System] / [Work Support] / [Active Test] / [Control the Fuel Pump Duty]
(4) In [Active Test], check for fuel leakage from the fuel piping with 80% of [Control the Fuel Pump Duty].

Result

Result	Go to
There is fuel leakage, or symptom or trace of fuel leakage.	A
There is neither actual fuel leakage, symptom of leakage, nor trace of leakage.	B

NOTE:
- Wiggle the wiring harness and connectors to identify trouble that may not occur constantly for a more accurate check.
- It is necessary to check the fuel level because startup failure due to running out of gas can also be detected.
- If fuel leakage is not found, check the fuel pump control system (low-pressure side) and then check if startup failure recurs. If it recurs, go to step 72 and check fuel system troubleshooting C (steps 73 through 76).

B → Inspection of fuel pump control system (low-pressure side) (Refer to ES - 602)

A

Repair or replacement of fuel piping

48	Reading of SSM4 data ([Engine Speed])

(1) Connect the SSM4 to the DLC3.
(2) Start the engine.
(3) Select the following menu items using the SSM4. : [Each System] / [Engine Control System] / [Data monitor] / [Engine Speed]
(4) Read the value of [Engine Speed] while the engine is running.
Criteria: Values corresponding to the engine speed are output continuously.

NOTE:
- Check the engine speed on the line graph display.
- If the engine cannot be started, check the cranking speed.
- If the engine speed is zero, open or short circuit in the crankshaft position sensor may occur.

NG → Replacement of crankshaft position sensor (Refer to ES - 681)

OK

49	Engine control computer check (fuel injector ASSY (port injection side) power supply circuit)

NOTE:
For the inspection procedure and precautions for wiring harnesses and connectors, refer to IN - 36.

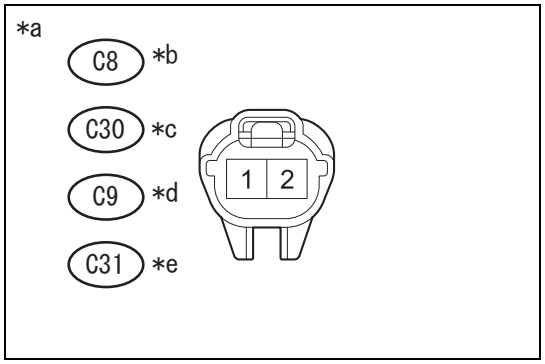

(1) Disconnect the connector for fuel injector ASSY (port injection side).
(2) Turn the ignition switch to ON.
(3) Measure the voltage between the terminals.

Voltage

Inspection terminals	Inspection conditions	Standard value
C8-1 - chassis ground	IG ON	11 to 14 V
C30-1 - chassis ground	IG ON	11 to 14 V
C9-1 - chassis ground	IG ON	11 to 14 V
C31-1 - chassis ground	IG ON	11 to 14 V

Captions in illustration

*a	Front side of vehicle wiring harness connector (fuel injector ASSY (port injection side) connectors)
*b	No. 1 cylinder
*c	No. 2 cylinder
*d	No. 3 cylinder
*e	No. 4 cylinder

NOTE:
- Wiggle the wiring harness and connectors to identify trouble that may not occur constantly for a more accurate check.
- Make sure an excessive tension is not placed on the wiring harness.

NG → Power supply circuit check (fuel injector ASSY (port injection side)) (Refer to ES - 633)

OK

Replacement of the engine control computer (Refer to ES - 670)

50	Inspection of intake air flow meter SUB-ASSY

(1) Check the intake air flow meter SUB-ASSY. (Refer to ES - 676)

NG → Go to Step 56.

OK

51	Intake system check (connection)

(1) Make sure there is no air leakage (from disconnected hoses, cracks, gaskets) at each part of the intake system. (Refer to IE - 4)
NOTE:
- Present of air leakage can be easily checked by racing the engine then releasing the accelerator pedal completely because this creates high vacuum that leads to large air induction noise.
- Air may be leaking (sucked in) if [Short term fuel trim B1] and [Long term fuel trim B1] show a larger difference between idling time (smaller mass air flow) and the normal time, and a smaller difference between racing time (larger mass air flow) and the normal time.

  Criteria: Air induction is not present.

NG → Repair or replacement of intake system

OK

52	Throttle body ASSY (with motor) check

(1) Disconnect the throttle body ASSY (with motor) connector.
NOTE:
Once the connector is disconnected, fail-safe mode takes place and the throttle opening angle is set to the specified value (fail-safe angle).
(2) Crank the engine to check if the engine starts.

Result

Result	Go to
Start the engine.	A
Engine does not start.	B

NOTE:
Performing this check may illuminate the MIL. Once the work is done, check and clear the codes. (Refer to ES - 28)

B → Go to Step 54.

A

53	Throttle body ASSY (with motor) check

(1) Check the air passage for carbon buildup.
Criteria: Carbon adhesion is not found.

NG → Replacement of throttle body ASSY (with motor) (Refer to ES - 666)

OK

54	Performing of SSM4 [Active Test] ([Control the VVT Linear (Bank1)], [Control the VVT Linear (Bank2)])

(1) Connect the SSM4 to the DLC3.
(2) Turn the ignition switch to ON.
(3) Start the engine and let it warm up until the engine coolant temperature stabilizes. (at 75°C [167°F] or more)
(4) Turn on the air conditioner.
(5) Select the following menu items using the SSM4. : [Each System] / [Engine Control System] / [Work Support] / [Active Test] / [Control the VVT Linear (Bank1)], [Control the VVT Linear (Bank2)]
(6) Start the engine and idle the engine and check the idle speed under [Active Test].

Criteria

Inspection conditions	Criteria
0°CA	Normal idle speed
Advance or retard the timing between 0°CA ←→100°CA.	Engine stalls, rough idling

NOTE:
- Wiggle the wiring harness and connectors to identify trouble that may not occur constantly for a more accurate check.
- Check the operation noise under [Active Test]. Also check the valves for problems such as failed valve return, stuck valve, and abnormal conditions.

NG → Replacement of camshaft timing oil control valve ASSY (intake side) (Refer to ES - 660)

ES

OK

55	Performing of SSM4 [Active Test] ([Control the VVT Exhaust Linear (Bank1)], [Control the VVT Exhaust Linear (Bank2)])

(1) Connect the SSM4 to the DLC3.
(2) Turn the ignition switch to ON.
(3) Start the engine and let it warm up until the engine coolant temperature stabilizes. (at 75°C [167°F] or more)
(4) Turn on the air conditioner.
(5) Select the following menu items using the SSM4. : [Each System] / [Engine Control System] / [Work Support] / [Active Test] / [Control the VVT Exhaust Linear (Bank1)], [Control the VVT Exhaust Linear (Bank2)]
(6) Start the engine and idle the engine and check the idle speed under [Active Test].

Criteria

Inspection conditions	Criteria
0°CA	Normal idle speed
Advance or retard the timing between 0°CA ←→100°CA.	Engine stalls, rough idling

Result

Result	Go to
Malfunction	A
Normal *1	B

NOTE:
- *1: If the operation is normal, go to step 72 and check the air control system troubleshooting (steps 84 through 86). If the engine still fails to start, check the fuel system troubleshooting A (steps 87 through 94).
- Wiggle the wiring harness and connectors to identify trouble that may not occur constantly for a more accurate check.
- Check the operation noise under the active test. Also check the valves for problems such as failed valve return, stuck valve, and abnormal conditions.

B → Go to Step 72.

A

Replacement of camshaft timing oil control valve ASSY (exhaust side) (Refer to ES - 660)

56	Check wiring harness and connector (engine control computer - intake air flow meter SUB-ASSY)

NOTE:
For the inspection procedure and precautions for wiring harnesses and connectors, refer to IN - 36.

(1) Disconnect the connector for the engine control computer.
(2) Disconnect the connector of the intake air flow meter SUB-ASSY.
(3) Measure the resistance between the terminals. (For terminal arrangement, refer to ES - 36.)

Resistance (open circuit check)

Inspection terminals	Inspection conditions	Standard value
A33-22 (VG) - C16-5 (VG)	Always	Less than 1 Ω
A33-29 (E2G) - C16-4 (E2G)	Always	Less than 1 Ω

Resistance (short circuit check)

Inspection terminals	Inspection conditions	Standard value
A33-22 (VG) and C16-5 (VG) - other terminals and chassis ground	Always	10 k Ωor more
A33-29 (E2G) and C16-4 (E2G) - other terminals and chassis ground	Always	10 k Ωor more

NOTE:
- Wiggle the wiring harness and connectors to identify trouble that may not occur constantly for a more accurate check.
- Make sure an excessive tension is not placed on the wiring harness.
- When the wiring harness is normal, replace the intake air flow meter SUB-ASSY then check if startup failure recurs. If it recurs, go to step 72 and check the air control system troubleshooting (steps 84 through 86). If the engine still fails to start, check the fuel system troubleshooting A (steps 87 through 94).

NG → Repair or replacement of wiring harness or connector

OK

Replacement of intake air flow meter SUB-ASSY (Refer to ES - 675)

57	Unit inspection of the E.F.I. water temperature sensor

(1) Perform unit inspection of E.F.I. water temperature sensor. (Refer to ES - 696)
NOTE:
When the E.F.I. water temperature sensor is faulty, replace it and then check if startup failure recurs. If it recurs, replace the engine control computer. If the engine still fails to start, go to step 72 and check the troubleshooting in the following order: fuel system troubleshooting A (steps 95 through 102), fuel system troubleshooting B (steps 103 through 105), air control system troubleshooting (steps 106 through 108), and ignition system troubleshooting (steps 109 through 115).

NG → Replacement of E.F.I. water temperature sensor (Refer to ES - 695)

OK

58	Check wiring harness and connector (engine control computer - E.F.I. water temperature sensor)

NOTE:
For the inspection procedure and precautions for wiring harnesses and connectors, refer to IN - 36.

(1) Disconnect the connector for the engine control computer.
(2) Disconnect the E.F.I. water temperature sensor connectors.
(3) Measure the resistance between the terminals. (For terminal arrangement, refer to ES - 36.)

Resistance (open circuit check)

Inspection terminals	Inspection conditions	Standard value
A36-30(THW) - C40-2(THW)	Always	Less than 1 Ω
A36-29(E1) - C40-1(E2)	Always	Less than 1 Ω

Resistance (short circuit check)

Inspection terminals	Inspection conditions	Standard value
A36-30 (THW) and C40-2 (THW) - other terminals and chassis ground	Always	10 k Ωor more
A36-29 (E1) and C40-1 (E2) - other terminals and chassis ground	Always	10 k Ωor more

NOTE:
- Wiggle the wiring harness and connectors to identify trouble that may not occur constantly for a more accurate check.
- Make sure an excessive tension is not placed on the wiring harness.
- When wiring harness or connectors are faulty, repair or replace them and then check if startup failure recurs. If it recurs, replace the engine control computer. If the engine still fails to start, go to step 72 and check the troubleshooting in the following order: fuel system troubleshooting A (steps 95 through 102), fuel system troubleshooting B (steps 103 through 105), air control system troubleshooting (steps 106 through 108), and ignition system troubleshooting (steps 109 through 115).

NG → Repair or replacement of wiring harness or connector

OK

59	Inspection of intake air flow meter SUB-ASSY

(1) Check the intake air flow meter SUB-ASSY. (Refer to ES - 676)
NOTE:
When the intake air flow meter SUB-ASSY is faulty, replace it and then check if startup failure recurs. If it recurs, replace the engine control computer. If the engine still fails to start, go to step 72 and check the troubleshooting in the following order: fuel system troubleshooting A (steps 95 through 102), fuel system troubleshooting B (steps 103

through 105), air control system troubleshooting (steps 106 through 108), and ignition system troubleshooting (steps 109 through 115).

Result

Result	Go to
Normal	A
Malfunction	B

B → Replacement of intake air flow meter SUB-ASSY (Refer to ES - 675)

ES

A

60	Check wiring harness and connector (engine control computer - intake air flow meter SUB-ASSY)

NOTE:
For the inspection procedure and precautions for wiring harnesses and connectors, refer to IN - 36.

(1) Disconnect the connector for the engine control computer.
(2) Disconnect the connector of the intake air flow meter SUB-ASSY.
(3) Measure the resistance between the terminals. (For terminal arrangement, refer to ES - 36.)

Resistance (open circuit check)

Inspection terminals	Inspection conditions	Standard value
A33-22 (VG) - C16-5 (VG)	Always	Less than 1 Ω
A33-29 (E2G) - C16-4 (E2G)	Always	Less than 1 Ω

Resistance (short circuit check)

Inspection terminals	Inspection conditions	Standard value
A33-22 (VG) and C16-5 (VG) - other terminals and chassis ground	Always	10 k Ωor more
A33-29 (E2G) and C16-4 (E2G) - other terminals and chassis ground	Always	10 k Ωor more

NOTE:

- Wiggle the wiring harness and connectors to identify trouble that may not occur constantly for a more accurate check.
- Make sure an excessive tension is not placed on the wiring harness.
- When wiring harness or connectors are faulty, repair or replace them and then check if startup failure recurs. If it recurs, replace the engine control computer. If the engine still fails to start, go to step 72 and check the troubleshooting in the following order: fuel system troubleshooting A (steps 95 through 102), fuel system troubleshooting B (steps 103 through 105), air control system troubleshooting (steps 106 through 108), and ignition system troubleshooting (steps 109 through 115).

NG → Repair or replacement of wiring harness or connector

OK

61	Reading SSM4 data ([Long term fuel trim B1], [Atmosphere Pressure])

(1) Connect the SSM4 to the DLC3.

(2) Turn the ignition switch to ON.
(3) Select the following menu items using the SSM4. : [Each System] / [Engine Control System] / [Data monitor] / [Long term fuel trim B1], [Atmosphere Pressure]
(4) Read [Long term fuel trim B1] and [Atmosphere Pressure] displayed on SSM4.

Result

[Data monitor] item	Result	Possible cause	Go to
[Long term fuel trim B1]	+25% or more, or below -25%	• Air / fuel ratio sensor • Intake air flow meter SUB-ASSY • Fuel injector ASSY (Port injection side) • Engine control computer	A
[Atmosphere Pressure]	80 kPa or less		
All data list items shown above	Each value is different from those shown above	-	B

B → Go to Step 65.

A

62	Check trouble phenomenon

(1) Remove the EFI (+B) fuse, wait for 60 seconds or more, then connect the fuse.
NOTE:
Initial diagnosis of electronic control throttle is performed after DTCs are cleared. For this reason, the engine starting after DTC clearance must be performed more than 10 seconds after IG ON.
(2) Start the engine to check if trouble phenomenon has gone away.

Result

Result	Go to
Engine starts.	A
Engine does not start.	B

B → Go to Step 65.

A

63	Performing of SSM4 [Active Test] ([Cylinder Fuel Rate])

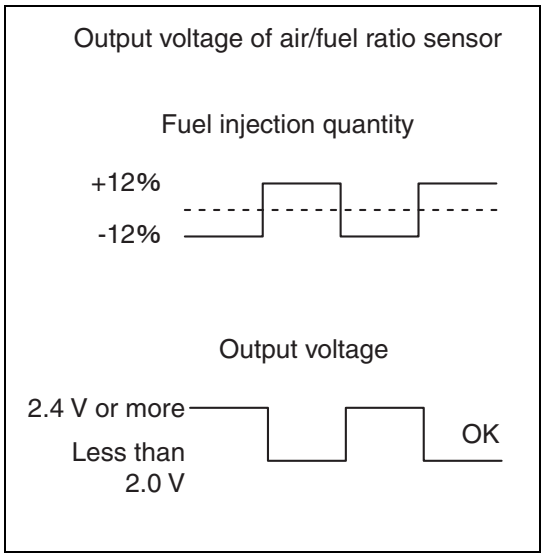

(1) Connect the SSM4 to the DLC3.
(2) Start the engine, turn off all the accessory switches, and wait until the engine warms up and the coolant temperature stabilizes. (at 80°C {176°F} or more).
(3) Idle the engine.
(4) Select the following menu items using the SSM4. : [Each System] / [Engine Control System] / [Work Support] / [Active Test] / [Cylinder Fuel Rate]
(5) Increase and decrease fuel injection amount, and read values of [A/F Sensor #11].

Voltage

Tester item	Standard value
Fuel injection amount (+12%)	Output voltage of air/fuel ratio sensor is less than 2.0 V.
Fuel injection amount (-12 %)	Output voltage of air/fuel ratio sensor is 2.4 V or more.

CAUTION:
- Voltage output of the air/fuel ratio sensor delays a few seconds.
- Because the sensors become cold, measure the voltage promptly after warming up the sensors.

NOTE:
When the air/fuel ratio sensor is faulty, replace it and then check if startup failure recurs. If it recurs, replace the engine control computer. If the engine still fails to start, go to step 72 and check the troubleshooting in the following order: fuel system troubleshooting A (steps 95 through 102), fuel system troubleshooting B (steps 103 through 105), air control system troubleshooting (steps 106 through 108), and ignition system troubleshooting (steps 109 through 115).

NG → Replacement of air/fuel ratio sensor (Refer to ES - 707)

OK

64	Check trouble phenomenon

(1) Check if the idle speed after engine startup is stable.
Criteria: Idle speed is stable.

NOTE:
After replacing the fuel injector ASSY (port injection side) or intake air flow meter SUB-ASSY, check if startup failure recurs. If it recurs, replace the engine control computer. If the engine still fails to start, go to step 72 and check the troubleshooting in the following order: fuel system troubleshooting A (steps 95 through 102), fuel system troubleshooting B (steps 103 through 105), air control system troubleshooting (steps 106 through 108), and ignition system troubleshooting (steps 109 through 115).

NG → Replacement of the fuel injector ASSY (port injection side) (Refer to FU - 21)

OK

Replacement of intake air flow meter SUB-ASSY (Refer to ES - 675)

65	Fuel pressure inspection (low-pressure side)

(1) Check the fuel pressure (low-pressure side). (Refer to FU - 9)

NG → Go to Step 71.

OK

66	Spark plug inspection

(1) Inspect the spark plug. (Refer to ES - 658)

Result

Result	Go to
All cylinders are normal.	A
Single cylinder is faulty. *1	B
All cylinder are faulty. *2 and *3	C

NOTE:

- *1: If a single cylinder is faulty, change the spark plug of the appropriate cylinder, and then check both ignition system and fuel system of that cylinder. Once repaired, check if the startup failure recurs. If the engine still fails to start, go to step 72 and check the troubleshooting in the following order: fuel system troubleshooting A (steps 95 through 102), fuel system troubleshooting B (steps 103 through 105), air control system troubleshooting (steps 106 through 108), and ignition system troubleshooting (steps 109 through 115).
- *2: If all cylinders are faulty, replace the spark plugs of the all cylinder, then check if startup failure recurs. If the engine still fails to start, go to step 72 and check the troubleshooting in the following order: fuel system troubleshooting A (steps 95 through 102), fuel system troubleshooting B (steps 103 through 105), air control system troubleshooting (steps 106 through 108), and ignition system troubleshooting (steps 109 through 115).
- *3: Repeating extremely short-distance trips may be causing the startup failure.

B → Replacement of air/fuel ratio sensor (abnormal cylinders) (Refer to ES - 687)

C → Replacement of spark plug (for all cylinders) (Refer to ES - 687)

A

67	Check trouble phenomenon

(1) Check the trouble phenomenon based on interview done to the customer.

Result

Trouble phenomenon	Probable defective parts	Go to
Startup failure occurs when a long period of time elapsed after engine is stopped. *1	Fuel pressure regulator valve ASSY is stuck open.	A
Startup failure occurs between approximately 15 minutes and 120 minutes after engine is stopped. *2	• Fuel injector ASSY (port injection side) leakage • Vacuum switching valve ASSY closing failure	B
Startup failure occurs between approximately 2 minutes and 3 minutes after engine is stopped. *3	Failure in fuel pressure holding by fuel pressure regulator valve ASSY	A
Inconsistency in conditions of problems other than those mentioned above and startup failure	-	C*4

ES

NOTE:
*1: Stuck opened fuel pressure regulator ASSY is suspected. Install a fuel pressure gauge and check pressure-holding ability after engine is stopped.
*2: Fuel leak from the fuel injector ASSY (port injection side) is suspected.
*3: Failure in fuel pressure-holding ability of the fuel pressure regulator ASSY is suspected. Install a fuel pressure gauge and check pressure-holding ability after engine is stopped.
*4: From step 72, check troubleshooting in the following order: fuel system troubleshooting A (steps 95 through 102), fuel system troubleshooting B (steps 103 through 105), air control system troubleshooting (steps 106 through 108), and ignition system troubleshooting (steps 109 through 115).

B → Go to Step 69.

C → Go to Step 72.

A

68	Fuel pressure inspection (low-pressure side)

(1) Attach a fuel pressure gauge and check fuel pressure (low-pressure side) after engine is stopped. (Refer to FU - 9)

Result

Result (fuel pressure)	Go to
Less than 147 kPa {1.5 kgf/cm^2, 21.3 psi} (5 minutes after engine is stopped)	A
147 kPa {1.5 kgf/cm^2, 21.3 psi} or more (5 minutes after engine is stopped)	B*1

NOTE:
- If the engine cannot be started, check the fuel pressure (low-pressure side) after cranking.
- *1: From step 72, check troubleshooting in the following order: fuel system troubleshooting A (steps 95 through 102), fuel system troubleshooting B (steps 103 through 105), air control system troubleshooting (steps 106 through 108), and ignition system troubleshooting (steps 109 through 115).

B → Go to Step 72.

A

Replacement of fuel pressure regulator ASSY (Refer to FU - 47)

69	Vacuum switching valve ASSY check

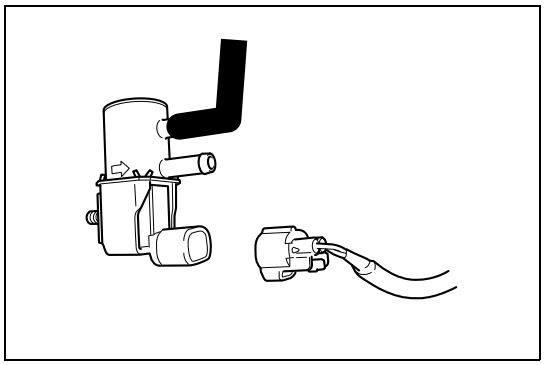

(1) Disconnect the vacuum hose (canister side) of the vacuum switching valve ASSY.
(2) Start the engine.
(3) Idle the engine.
(4) Disconnect the vacuum switching valve ASSY connector.
(5) Check air vent of the vacuum switching valve ASSY.
Criteria: No air vent

NOTE:
Performing this check may illuminate the MIL. Once the work is done, check and clear the codes. (Refer to ES - 28)

NG → System check (evaporative purge control system)

OK

70	Fuel injector ASSY check (HC content on port injection side)

(1) Stop the engine and purge inside the intake air surge tank ASSY with pressurized air.
(2) Wait for 15 minutes and measure HC content inside the intake air surge tank ASSY.

Result

Result	Go to
4000 ppm or more	A
Less than 4000 ppm	B*1

NOTE:
- When HC content is 4000 ppm or more, air-tightness failure of fuel injector ASSY (port injection side) is suspected.
- *1: From step 72, check troubleshooting in the following order: fuel system troubleshooting A (steps 95 through 102), fuel system troubleshooting B (steps 103 through 105), air control system troubleshooting (steps 106 through 108), and ignition system troubleshooting (steps 109 through 115).

B → Go to Step 72.

A

Replacement of the fuel injector ASSY (port injection side) (Refer to FU - 21)

71	Performing of SSM4 [Active Test] ([Control the Fuel Pump Duty])

(1) Connect the SSM4 to the DLC3.
(2) Turn the ignition switch to ON.

(3) Select the following menu items using the SSM4. : [Each System] / [Engine Control System] / [Work Support] / [Active Test] / [Control the Fuel Pump Duty]

(4) In [Active Test], check for fuel leakage from the fuel piping with 80% of [Control the Fuel Pump Duty].

Result

Result	Go to
There is fuel leakage, or symptom or trace of fuel leakage.	A
There is neither actual fuel leakage, symptom of leakage, nor trace of leakage.	B

NOTE:

- Wiggle the wiring harness and connectors to identify trouble that may not occur constantly for a more accurate check.
- It is necessary to check the fuel level because startup failure due to running out of gas can also be detected.
- If fuel leakage is not found, check the fuel pump control system (low-pressure side) and then check if startup failure recurs. If the engine still fails to start, go to step 72 and check the troubleshooting in the following order: fuel system troubleshooting A (steps 95 through 102), fuel system troubleshooting B (steps 103 through 105), air control system troubleshooting (steps 106 through 108), and ignition system troubleshooting (steps 109 through 115).

B → Inspection of fuel pump control system (low-pressure side) (Refer to ES - 602)

A → Repair or replacement of fuel piping

72	Check trouble phenomenon

(1) If the trouble is not identified by performing inspection in steps 38, 39, 40, and 47, check the fuel system troubleshooting C (steps 73 through 76).

Result

Steps where inspection was performed	Systematic troubleshooting	Step	Go to
Steps 38, 39, 40, and 47	Fuel system troubleshooting C	73 to 76	A

(2) If the trouble is not identified by performing inspection in steps 45, check the ignition system troubleshooting (steps 77 through 83).

Result

Steps where inspection was performed	Systematic troubleshooting	Step	Go to
Step 45	Ignition system troubleshooting	77 to 83	B

(3) If the trouble is not identified by performing inspection in steps 55 and 56, check the air control system troubleshooting (steps 84 through 86). If the engine still fails to start, check fuel system troubleshooting A (steps 87 through 94).

Result

Steps where inspection was performed	Systematic troubleshooting	Step	Go to
Steps 55 and 56	Air control system troubleshooting	84 to 86	C
	Fuel system troubleshooting A	87 to 94	

(4) If the trouble is not identified by performing inspection in steps 57, 58, 59, 60, 63, 64, 66, 67, 68, 70, and 71, check troubleshooting in the following order: fuel system troubleshooting A (steps 95 through 102), fuel system troubleshooting B (steps 103 through 105), air control system troubleshooting (steps 106 through 108), and ignition system troubleshooting (steps 109 through 115).

ES

Result

Steps where inspection was performed	Systematic troubleshooting	Step	Go to
Step 57, 58, 59, 60, 63, 64, 66, 67, 68, 70, 71	Fuel system troubleshooting A	95 to 102	D
	Fuel system troubleshooting B	103 to 105	
	Air control system troubleshooting	106 to 108	
	Ignition system troubleshooting	109 to 115	

B → Go to Step 77.

C → Go to Step 84.

D → Go to Step 95.

A

73	Fuel injector ASSY unit inspection (port injection side)

(1) Perform a unit inspection on the fuel injector ASSY (port injection side). (Refer to FU - 29)

NG → Replacement of the fuel injector ASSY (port injection side) (Refer to FU - 21)

OK

74	Engine control computer check (fuel injector ASSY (port injection side) power supply circuit)

NOTE:
For the inspection procedure and precautions for wiring harnesses and connectors, refer to IN - 36.

(1) Disconnect the connector for fuel injector ASSY (port injection side).

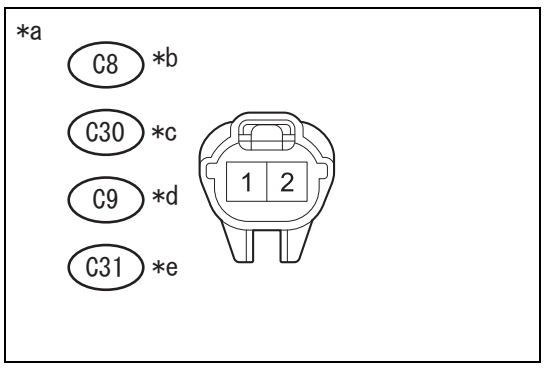

(2) Turn the ignition switch to ON.
(3) Measure the voltage between the terminals.

Voltage

Inspection terminals	Inspection conditions	Standard value
C8-1 - chassis ground	IG ON	11 to 14 V
C30-1 - chassis ground	IG ON	11 to 14 V
C9-1 - chassis ground	IG ON	11 to 14 V
C31-1 - chassis ground	IG ON	11 to 14 V

Captions in illustration

*a	Front side of vehicle wiring harness connector (fuel injector ASSY (port injection side) connectors)
*b	No. 1 cylinder
*c	No. 2 cylinder
*d	No. 3 cylinder
*e	No. 4 cylinder

NOTE:

- Wiggle the wiring harness and connectors to identify trouble that may not occur constantly for a more accurate check.
- Make sure an excessive tension is not placed on the wiring harness.

NG → Power supply circuit check (fuel injector ASSY (port injection side)) (Refer to ES - 633)

OK

75	Crankshaft position sensor replacement

(1) Replace the crankshaft position sensor and check if the trouble is solved.

NOTE:

Replacement of crankshaft position sensor (Refer to ES - 681)

Result

Result	Go to
Trouble is not solved.	A
Trouble is solved.	B

B → Complete (trouble caused by crankshaft position sensor)

A

76	Replacement of camshaft position sensor

(1) Replace the camshaft position sensor and check if the trouble is solved.

NOTE:

Replacement of camshaft position sensor (Refer to ES - 678)

Result

Result	Go to
Trouble is solved.	A
Trouble is not solved.	B

B → Replacement of the engine control computer (Refer to ES - 670)

A

Complete (trouble caused by camshaft position sensor)

77	Crankshaft position sensor check (sensor installation area)

(1) Check the tightening condition of the crankshaft position sensor bolt and installation condition of the sensor.
(2) Check installation conditions of the crankshaft position sensor connector.
Criteria: Properly installed.

NG → Repair or replacement of sensor installation area

ES

OK

78	Camshaft position sensor check (sensor installation area)

(1) Check the torque of the camshaft position sensor bolt and installation condition of the sensor.
(2) Check installation conditions of the camshaft position sensor.
Criteria: Properly installed.

NG → Repair or replacement of sensor installation area

OK

79	Check wiring harness and connector (engine control computer - crankshaft position sensor)

NOTE:
For the inspection procedure and precautions for wiring harnesses and connectors, refer to IN - 36.
(1) Disconnect the connector for the engine control computer.
(2) Disconnect the crankshaft position sensor connector.
(3) Measure the resistance between the terminals. (For terminal arrangement, refer to ES - 36.)

Resistance (open circuit check)

Inspection terminals	Inspection conditions	Standard value
A34-16(NE+) - C47-1(OUT)	Always	Less than 1 Ω
A34-27(NE-) - C47-2(GND)	Always	Less than 1 Ω
A36-19(VC) - C47-3(VCC)	Always	Less than 1 Ω

Resistance (short circuit check)

Inspection terminals	Inspection conditions	Standard value
A34-16 (NE+) and C47-1 (OUT) - other terminals and chassis ground	Always	10 k Ωor more
A34-27 (NE-) and C47-2 (GND) - other terminals and chassis ground	Always	10 k Ωor more
A36-19(VC) - C47-3(VCC)	Always	10 k Ωor more

NOTE:
- Wiggle the wiring harness and connectors to identify trouble that may not occur constantly for a more accurate check.
- Make sure an excessive tension is not placed on the wiring harness.

NG → Repair or replacement of wiring harness or connector

OK

80	Check wiring harness and connector (engine control computer - camshaft position sensor (intake side))

NOTE:
For the inspection procedure and precautions for wiring harnesses and connectors, refer to IN - 36.

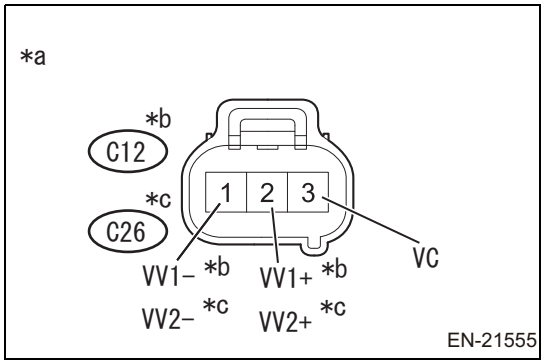

(1) Disconnect the connectors of the camshaft position sensor (bank 1 intake side and bank 2 intake side).
(2) Turn the ignition switch to ON.
(3) Measure the voltage between the terminals.

Voltage

Inspection terminals	Inspection conditions	Standard value
C12-1 (VV1-) - chassis ground	IG ON	11 to 14 V
C26-1 (VV2-) - chassis ground	IG ON	11 to 14 V

(4) Disconnect the connector for the engine control computer.
(5) Measure the resistance between the terminals. (For terminal arrangement, refer to ES - 36.)

Resistance (open circuit check)

Inspection terminals	Inspection conditions	Standard value
A34-26 (VV1+) - C12-2 (VV1+)	Always	Less than 1 Ω
A34-34 (VCV) - C12-3 (VC)	Always	Less than 1 Ω
A34-15 (VV2+) - C26-2 (VV2+)	Always	Less than 1 Ω
A34-34(VCV) - C26-3(VC)	Always	Less than 1 Ω

Resistance (short circuit check)

Inspection terminals	Inspection conditions	Standard value
A34-26 (VV1+) and C12-2 (VV1+) - other terminals and chassis ground	Always	10 k Ωor more
A34-34 (VCV) and C12-3 (VC) - other terminals and chassis ground	Always	10 k Ωor more
A34-15 (VV2+) and C26-2 (VV2+) - other terminals and chassis ground	Always	10 k Ωor more
A34-34 (VCV) and C26-3 (VC) - other terminals and chassis ground	Always	10 k Ωor more

Captions in illustration

*a	Front side of vehicle wiring harness connector (camshaft position sensor (intake side) connector)
*b	Bank 1
*c	Bank 2

NOTE:
- Wiggle the wiring harness and connectors to identify trouble that may not occur constantly for a more accurate check.
- Make sure an excessive tension is not placed on the wiring harness.

NG → Repair or replacement of wiring harness or connector

OK

ES

81	Check wiring harness and connector (engine control computer - camshaft position sensor (exhaust side))

NOTE:
For the inspection procedure and precautions for wiring harnesses and connectors, refer to IN - 36.

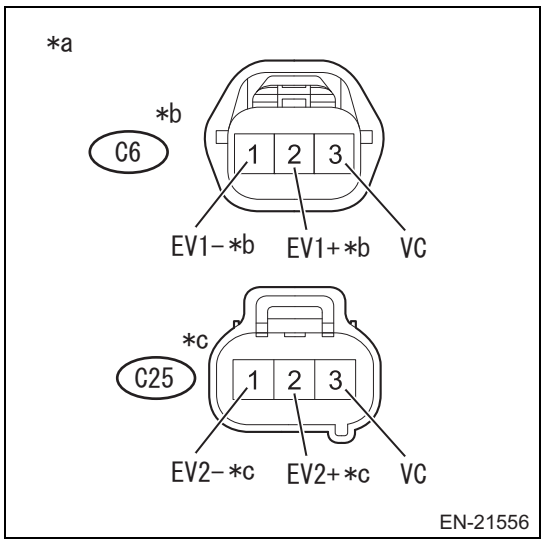

(1) Disconnect the connector of the camshaft position sensor (exhaust side bank 1 and bank 2).
(2) Measure the voltage between the terminals.

Voltage

Inspection terminals	Inspection conditions	Standard value
C6-1 (EV1-) - chassis ground	IG ON	11 to 14 V
C25-1 (EV2-) - chassis ground	IG ON	11 to 14 V

(3) Disconnect the connector for the engine control computer.
(4) Measure the resistance between the terminals. (For terminal arrangement, refer to ES - 36.)

Resistance (open circuit check)

Inspection terminals	Inspection conditions	Standard value
A34-14 (EV1+) - C6-2 (EV1+)	Always	Less than 1 Ω
A34-34(VCV) - C6-3(VC)	Always	Less than 1 Ω
A34-25 (EV2+) - C25-2 (EV2+)	Always	Less than 1 Ω
A34-34(VCV) - C25-3(VC)	Always	Less than 1 Ω

Resistance (short circuit check)

Inspection terminals	Inspection conditions	Standard value
A34-14 (EV1+) and C6-2 (EV1+) - other terminals and chassis ground	Always	10 k Ωor more
A34-34 (VCV) and C6-3 (VC) - other terminals and chassis ground	Always	10 k Ωor more
A34-25 (EV2+) and C25-2 (EV2+) - other terminals and chassis ground	Always	10 k Ωor more
A34-34 (VCV) and C25-3 (VC) - other terminals and chassis ground	Always	10 k Ωor more

Captions in illustration

*a	Front side of vehicle wiring harness connector (camshaft position sensor (exhaust side) connector)
*b	Bank 1
*c	Bank 2

NOTE:

- Wiggle the wiring harness and connectors to identify trouble that may not occur constantly for a more accurate check.
- Make sure an excessive tension is not placed on the wiring harness.

NG → Repair or replacement of wiring harness or connector

OK

82	Crankshaft position sensor replacement

(1) Replace the crankshaft position sensor and check if the trouble is solved.

NOTE:

Replacement of crankshaft position sensor (Refer to ES - 681)

Result

Result	Go to
Trouble is not solved.	A
Trouble is solved.	B

B → Complete (trouble caused by crankshaft position sensor)

A

83	Replacement of camshaft position sensor

(1) Replace the camshaft position sensor and check if the trouble is solved.

NOTE:

Replacement of camshaft position sensor (Refer to ES - 678)

Result

Result	Go to
Trouble is solved.	A
Trouble is not solved.	B

B → Replacement of the engine control computer (Refer to ES - 670)

A

Complete (trouble caused by camshaft position sensor)

84	Reading of SSM4 data ([ISC Learning Value])

(1) Connect the SSM4 to the DLC3.

(2) Start the engine, turn off all the accessory switches, and wait until the engine warms up and the coolant temperature stabilizes. (at 75°C {167°F} or more).
(3) Select the following menu items using the SSM4. : [Each System] / [Engine Control System] / [Data monitor] / [ISC Learning Value]
(4) Read the [ISC Learning Value] displayed on SSM4.

Result

Data monitor	Result	Possible cause	Go to
[ISC Learning Value]	Displacement (liter) ×0.9 or more	•Valve timing •Compression	A
	Displacement (liter) ×less than 0.9	-	B

B → Go to Step 86.

A

85	Compression inspection

(1) Inspect the compression. (Refer to EM - 2)

NG → Engine unit repair or replacement

OK

Valve timing adjustment (Refer to EM - 13)

86	Unit inspection of the E.F.I. water temperature sensor

(1) Perform unit inspection of E.F.I. water temperature sensor. (Refer to ES - 696)

NG → Replacement of E.F.I. water temperature sensor (Refer to ES - 695)

OK

87	Fuel pressure inspection (low-pressure side)

(1) Attach a fuel pressure gauge and check fuel pressure (low-pressure side) during cranking and after engine is stopped. (Refer to FU - 9)

Standard value

Driving conditions	Standard value
When cranking	304 to 343 kPa{3.1 to 3.5 kgf/cm^2, 44.1 to 49.7psi}
5 minutes after engine stop	147 kPa {1.5 kgf/cm^2, 21.3 psi} or more

NG → Go to Step 93.

OK

88	Reading of SSM4 data ([Long term fuel trim B1])

(1) Connect the SSM4 to the DLC3.
(2) Turn the ignition switch to ON.
(3) Select the following menu items using the SSM4. : [Each System] / [Engine Control System] / [Data monitor] / [Long term fuel trim B1]
(4) Read [Long term fuel trim B1] displayed on SSM4.

Result

[Data monitor]	Result	Possible cause	Go to
[Long term fuel trim B1]	-15 % to +15 %	• Wiring harness or connector • Fuel	A
	+15 % or more, or below -15 %	Fuel injector ASSY (Port injection side)	B

B → Replacement of the fuel injector ASSY (port injection side) (Refer to FU - 21)

A

89	Check trouble phenomenon

(1) After the engine starts, check stability of the present and the past idle speeds.

Result

Trouble phenomenon	Probable defective parts	Go to
Idle speed is unstable.	Crankshaft position sensor system	A
Idle speed is stable both in the present and the past.	Fuel	B

NOTE:
Ask your customer for information including type of fuel and gas stations they are using to determines if the trouble is caused by the fuel they are using.

B → Fuel replacement

A

90	Crankshaft position sensor check (sensor installation area)

(1) Check the tightening condition of the crankshaft position sensor bolt and installation condition of the sensor.
(2) Check installation conditions of the crankshaft position sensor connector.
Criteria: Properly installed.

NG → Repair or replacement of sensor installation area

OK

91	Check wiring harness and connector (engine control computer - crankshaft position sensor)

NOTE:
For the inspection procedure and precautions for wiring harnesses and connectors, refer to IN - 36.

(1) Disconnect the connector for the engine control computer.
(2) Disconnect the crankshaft position sensor connector.
(3) Measure the resistance between the terminals. (For terminal arrangement, refer to ES - 36.)

Resistance (open circuit check)

Inspection terminals	Inspection conditions	Standard value
A34-16(NE+) - C47-1(OUT)	Always	Less than 1 Ω
A34-27(NE-) - C47-2(GND)	Always	Less than 1 Ω
A36-19(VC) - C47-3(VCC)	Always	Less than 1 Ω

ES

Resistance (short circuit check)

Inspection terminals	Inspection conditions	Standard value
A34-16 (NE+) and C47-1 (OUT) - other terminals and chassis ground	Always	10 k Ωor more
A34-27 (NE-) and C47-2 (GND) - other terminals and chassis ground	Always	10 k Ωor more
A36-19(VC) - C47-3(VCC)	Always	10 k Ωor more

NOTE:
- Wiggle the wiring harness and connectors to identify trouble that may not occur constantly for a more accurate check.
- Make sure an excessive tension is not placed on the wiring harness.

NG → Repair or replacement of wiring harness or connector

OK

92	Crankshaft position sensor replacement

(1) Replace the crankshaft position sensor and check if the trouble is solved.

NOTE:
Replacement of crankshaft position sensor (Refer to ES - 681)

Result

Result	Go to
Trouble is solved.	A
Trouble is not solved.	B

B → Replacement of the engine control computer (Refer to ES - 670)

A

Complete (trouble caused by crankshaft position sensor)

93	Performing of SSM4 [Active Test] ([Control the Fuel Pump Duty])

(1) Connect the SSM4 to the DLC3.
(2) Turn the ignition switch to ON.

(3) Select the following menu items using the SSM4. : [Each System] / [Engine Control System] / [Work Support] / [Active Test] / [Control the Fuel Pump Duty]
(4) In [Active Test], check for fuel leakage from the fuel piping with 80% of [Control the Fuel Pump Duty].

Result

Result	Go to
There is fuel leakage, or symptom or trace of fuel leakage.	A
There is neither actual fuel leakage, symptom of leakage, nor trace of leakage.	B

NOTE:
- Wiggle the wiring harness and connectors to identify trouble that may not occur constantly for a more accurate check.
- In [Active Test], if operating sound of the fuel pump (low-pressure side) is not heard, failure in the fuel pump control system (low-pressure side) is suspected.
- It is necessary to check the fuel level because startup failure due to running out of gas can also be detected.

B → Go to Step 94.

A

Repair or replacement of fuel piping

94	Perform a unit inspection of fuel pump ASSY (low pressure side)

(1) Perform a unit inspection on the fuel pump (low-pressure side) (Refer to FU - 56)

NG → Replacement of the fuel pump ASSY (low-pressure side) (Refer to FU - 47)

OK

Replacement of fuel pressure regulator ASSY (Refer to FU - 47)

95	Fuel pressure inspection (low-pressure side)

(1) Attach a fuel pressure gauge and check fuel pressure (low-pressure side) during cranking and after engine is stopped. (Refer to FU - 9)

Standard value

Driving conditions	Standard value
When cranking	304 to 343 kPa{3.1 to 3.5 kgf/cm^2, 44.1 to 49.7psi}
5 minutes after engine stop	147 kPa {1.5 kgf/cm^2, 21.3 psi} or more

NG → Go to Step 101.

OK

96	Reading of SSM4 data ([Long term fuel trim B1])

(1) Connect the SSM4 to the DLC3.
(2) Turn the ignition switch to ON.
(3) Select the following menu items using the SSM4. : [Each System] / [Engine Control System] / [Data monitor] / [Long term fuel trim B1]
(4) Read [Long term fuel trim B1] displayed on SSM4.

Result

ES

[Data monitor]	Result	Possible cause	Go to
[Long term fuel trim B1]	-15 % to +15 %	• Wiring harness or connector • Fuel	A
	+15 % or more, or below -15 %	Fuel injector ASSY (Port injection side)	B

B → Replacement of the fuel injector ASSY (port injection side) (Refer to FU - 21)

A

97	Check trouble phenomenon

(1) After the engine starts, check stability of the present and the past idle speeds.

Result

Trouble phenomenon	Probable defective parts	Go to
Idle speed is unstable.	Crankshaft position sensor system	A
Idle speed is stable both in the present and the past.	Fuel	B

NOTE:
Ask your customer for information including type of fuel and gas stations they are using to determines if the trouble is caused by the fuel they are using.

B → Fuel replacement

A

98	Crankshaft position sensor check (sensor installation area)

(1) Check the tightening condition of the crankshaft position sensor bolt and installation condition of the sensor.
(2) Check installation conditions of the crankshaft position sensor connector.
Criteria: Properly installed.

NG → Repair or replacement of sensor installation area

OK

99	Check wiring harness and connector (engine control computer - crankshaft position sensor)

NOTE:
For the inspection procedure and precautions for wiring harnesses and connectors, refer to IN - 36.

(1) Disconnect the connector for the engine control computer.
(2) Disconnect the crankshaft position sensor connector.
(3) Measure the resistance between the terminals. (For terminal arrangement, refer to ES - 36.)

ES

Resistance (open circuit check)

Inspection terminals	Inspection conditions	Standard value
A34-16(NE+) - C47-1(OUT)	Always	Less than 1 Ω
A34-27(NE-) - C47-2(GND)	Always	Less than 1 Ω
A36-19(VC) - C47-3(VCC)	Always	Less than 1 Ω

Resistance (short circuit check)

Inspection terminals	Inspection conditions	Standard value
A34-16 (NE+) and C47-1 (OUT) - other terminals and chassis ground	Always	10 k Ωor more
A34-27 (NE-) and C47-2 (GND) - other terminals and chassis ground	Always	10 k Ωor more
A36-19(VC) - C47-3(VCC)	Always	10 k Ωor more

NOTE:
- Wiggle the wiring harness and connectors to identify trouble that may not occur constantly for a more accurate check.
- Make sure an excessive tension is not placed on the wiring harness.

NG → Repair or replacement of wiring harness or connector

OK

100	Crankshaft position sensor check

(1) Replace the crankshaft position sensor and check if the trouble is solved.

NOTE:
Replacement of crankshaft position sensor (Refer to ES - 681)

Result

Result	Go to
Trouble is solved.	A
Trouble is not solved.	B

B → Replacement of the engine control computer (Refer to ES - 670)

A

Complete (trouble caused by crankshaft position sensor)

101	Performing of SSM4 [Active Test] ([Control the Fuel Pump Duty])

(1) Connect the SSM4 to the DLC3.
(2) Turn the ignition switch to ON.
(3) Select the following menu items using the SSM4. : [Each System] / [Engine Control System] / [Work Support] / [Active Test] / [Control the Fuel Pump Duty]
(4) In [Active Test], check for fuel leakage from the fuel piping with 80% of [Control the Fuel Pump Duty].

ES

Result

Result	Go to
There is fuel leakage, or symptom or trace of fuel leakage.	A
There is neither actual fuel leakage, symptom of leakage, nor trace of leakage.	B

NOTE:
- Wiggle the wiring harness and connectors to identify trouble that may not occur constantly for a more accurate check.
- In the active test, if operating sound of the fuel pump (low-pressure side) is not heard, failure in the fuel pump control system (low-pressure side) is suspected.
- It is necessary to check the fuel level because startup failure due to running out of gas can also be detected.

B → Go to Step 102.

A →

Repair or replacement of fuel piping

102	Fuel pump unit inspection (low-pressure side)

(1) Perform a unit inspection on the fuel pump (low-pressure side) (Refer to FU - 56)

NG → Replacement of the fuel pump ASSY (low-pressure side) (Refer to FU - 47)

OK →

103	Vacuum switching valve ASSY check

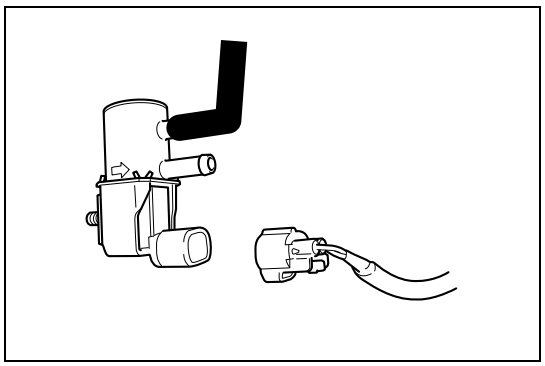

(1) Disconnect the vacuum hose (canister side) of the vacuum switching valve ASSY.
(2) Start the engine.
(3) Idle the engine.
(4) Disconnect the vacuum switching valve ASSY connector.
(5) Check air vent of the vacuum switching valve ASSY.
Criteria: No air vent

NOTE:
Performing this check may illuminate the MIL. Once the work is done, check and clear the codes. (Refer to ES - 28)

NG → System check (evaporative purge control system)

OK

104 Fuel injector ASSY check (HC content on port injection side)

(1) Stop the engine and purge inside the intake air surge tank ASSY with pressurized air.
(2) Wait for 15 minutes and measure HC content inside the intake air surge tank ASSY.

ES

Result

Result	Go to
4000 ppm or more	A
Less than 4000 ppm	B

NOTE:
When HC content is 4000 ppm or more, air-tightness failure of fuel injector ASSY (port injection side) is suspected.

B → Go to Step 105.

A

Replacement of the fuel injector ASSY (port injection side) (Refer to FU - 21)

105 Intake valve check

(1) Check the intake valves for carbon buildup.

Result

Result	Go to
Carbon buildup on intake valves.	A
Intake valves are free of carbon.	B

B → Go to Step 106.

A

Intake valves (cleaning)

106 Reading of SSM4 data ([ISC Learning Value])

(1) Connect the SSM4 to the DLC3.
(2) Start the engine, turn off all the accessory switches, and wait until the engine warms up and the coolant temperature stabilizes.
(3) Select the following menu items using the SSM4. : [Each System] / [Engine Control System] / [Data monitor] / [ISC Learning Value]
(4) Read the [ISC Learning Value] displayed on SSM4.

Result

[Data monitor]	Result	Possible cause	Go to
[ISC Learning Value]	Displacement (liter) ×0.9 or more	•Valve timing •Compression	A
	Displacement (liter) ×less than 0.9	-	B

B → Go to Step 108.

ES

A

107	Compression inspection

(1) Inspect the compression. (Refer to EM - 2)

NG → Engine unit repair or replacement

OK

Valve timing adjustment (Refer to EM - 13)

108	Unit inspection of the E.F.I. water temperature sensor

(1) Perform unit inspection of E.F.I. water temperature sensor. (Refer to ES - 696)

NG → Replacement of E.F.I. water temperature sensor (Refer to ES - 695)

OK

109	Crankshaft position sensor check (sensor installation area)

(1) Check the tightening condition of the crankshaft position sensor bolt and installation condition of the sensor.
(2) Check installation conditions of the crankshaft position sensor connector.
Criteria: Properly installed.

NG → Repair or replacement of sensor installation area

OK

110	Camshaft position sensor check (sensor installation area)

(1) Check the torque of the camshaft position sensor bolt and installation condition of the sensor.
(2) Check installation conditions of the camshaft position sensor.
Criteria: Properly installed.

NG → Repair or replacement of sensor installation area

OK

111	Check wiring harness and connector (engine control computer - crankshaft position sensor)

NOTE:
For the inspection procedure and precautions for wiring harnesses and connectors, refer to IN - 36.

(1) Disconnect the connector for the engine control computer.
(2) Disconnect the crankshaft position sensor connector.
(3) Measure the resistance between the terminals. (For terminal arrangement, refer to ES - 36.)

Resistance (open circuit check)

Inspection terminals	Inspection conditions	Standard value
A34-16(NE+) - C47-1(OUT)	Always	Less than 1 Ω
A34-27(NE-) - C47-2(GND)	Always	Less than 1 Ω
A36-19(VC) - C47-3(VCC)	Always	Less than 1 Ω

Resistance (short circuit check)

Inspection terminals	Inspection conditions	Standard value
A34-16 (NE+) and C47-1 (OUT) - other terminals and chassis ground	Always	10 k Ωor more
A34-27 (NE-) and C47-2 (GND) - other terminals and chassis ground	Always	10 k Ωor more
A36-19(VC) - C47-3(VCC)	Always	10 k Ωor more

NOTE:
- Wiggle the wiring harness and connectors to identify trouble that may not occur constantly for a more accurate check.
- Make sure an excessive tension is not placed on the wiring harness.

NG → Repair or replacement of wiring harness or connector

OK

112	Check wiring harness and connector (engine control computer - camshaft position sensor (intake side))

NOTE:
For the inspection procedure and precautions for wiring harnesses and connectors, refer to IN - 36.

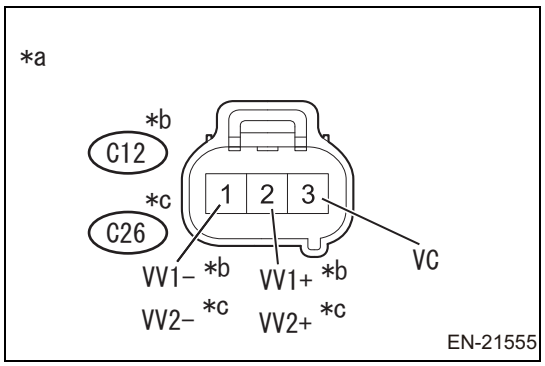

(1) Disconnect the connector of the camshaft position sensor (intake side bank 1 and bank 2).
(2) Measure the voltage between the terminals.

Voltage

Inspection terminals	Inspection conditions	Standard value
C12-1 (VV1-) - chassis ground	IG ON	11 to 14 V
C26-1 (VV2-) - chassis ground	IG ON	11 to 14 V

(3) Disconnect the connector for the engine control computer.
(4) Measure the resistance between the terminals. (For terminal arrangement, refer to ES - 36.)

Resistance (open circuit check)

Inspection terminals	Inspection conditions	Standard value
A34-34 (VCV) - C12-3 (VC)	Always	Less than 1 Ω
A34-34(VCV) - C26-3(VC)	Always	Less than 1 Ω
A34-26 (VV1+) - C12-2 (VV1+)	Always	Less than 1 Ω
A34-15 (VV2+) - C26-2 (VV2+)	Always	Less than 1 Ω

Resistance (short circuit check)

Inspection terminals	Inspection conditions	Standard value
A34-34 (VCV) and C12-3 - other terminals and chassis ground	Always	10 k Ωor more
A34-34 (VCV) and C26-3 - other terminals and chassis ground	Always	10 k Ωor more
A34-26 (VV1+) and C12-2 - other terminals and chassis ground	Always	10 k Ωor more
A34-15 (VV2+) and C26-2 - other terminals and chassis ground	Always	10 k Ωor more

Captions in illustration

*a	Front side of vehicle wiring harness connector (camshaft position sensor (intake side) connector)
*b	Bank 1
*c	Bank 2

NOTE:

- Wiggle the wiring harness and connectors to identify trouble that may not occur constantly for a more accurate check.
- Make sure an excessive tension is not placed on the wiring harness.

NG → Repair or replacement of wiring harness or connector

OK

113	Check wiring harness and connector (engine control computer - camshaft position sensor (exhaust side))

NOTE:

For the inspection procedure and precautions for wiring harnesses and connectors, refer to IN - 36.

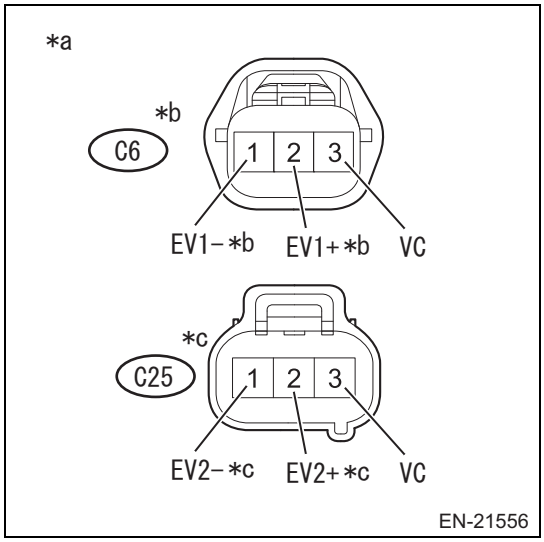

(1) Disconnect the connector of the camshaft position sensor (exhaust side bank 1 and bank 2).
(2) Measure the voltage between the terminals.

Voltage

Inspection terminals	Inspection conditions	Standard value
C6-1 (EV1-) - chassis ground	IG ON	11 to 14 V
C25-1 (EV2-) - chassis ground	IG ON	11 to 14 V

(3) Disconnect the connector for the engine control computer.
(4) Measure the resistance between the terminals. (For terminal arrangement, refer to ES - 36.)

Resistance (open circuit check)

Inspection terminals	Inspection conditions	Standard value
A34-14 (EV1+) - C6-2 (EV1+)	Always	Less than 1 Ω
A34-34(VCV) - C6-3(VC)	Always	Less than 1 Ω
A34-25 (EV2+) - C25-2 (EV2+)	Always	Less than 1 Ω
A34-34(VCV) - C25-3(VC)	Always	Less than 1 Ω

Resistance (short circuit check)

Inspection terminals	Inspection conditions	Standard value
A34-14 (EV1+) and C6-2 (EV1+) - other terminals and chassis ground	Always	10 k Ωor more
A34-34 (VCV) and C6-3 (VC) - other terminals and chassis ground	Always	10 k Ωor more
A34-25 (EV2+) and C25-2 (EV2+) - other terminals and chassis ground	Always	10 k Ωor more
A34-34 (VCV) and C25-3 (VC) - other terminals and chassis ground	Always	10 k Ωor more

Captions in illustration

*a	Front side of vehicle wiring harness connector (camshaft position sensor (exhaust side) connector)
*b	Bank 1
*c	Bank 2

NOTE:
- Wiggle the wiring harness and connectors to identify trouble that may not occur constantly for a more accurate check.
- Make sure an excessive tension is not placed on the wiring harness.

NG → Repair or replacement of wiring harness or connector

OK

ES

114	Crankshaft position sensor replacement

(1) Replace the crankshaft position sensor and check if the trouble is solved.

NOTE:

Replacement of crankshaft position sensor (Refer to ES - 681)

Result

Result	Go to
Trouble is not solved.	A
Trouble is solved.	B

B → Complete (trouble caused by crankshaft position sensor)

A

115	Replacement of camshaft position sensor

(1) Replace the camshaft position sensor and check if the trouble is solved.

NOTE:

Replacement of camshaft position sensor (Refer to ES - 678)

Result

Result	Go to
Trouble is solved.	A
Trouble is not solved.	B

B → Replacement of the engine control computer (Refer to ES - 670)

A

Complete (trouble caused by camshaft position sensor)

DTC	P2096	Sub FB correction amount 1 lean

DTC	P2097	Sub FB correction amount 1 rich

Circuit description

Sub fuel correction relates to feedback correction. Not the basic injection period. Sub fuel correction consists of both short term and long term fuel corrections between front catalyst and rear catalyst.

The short term fuel correction indicates the amount of fuel correction which is used to always keep air fuel ratio at the theoretical level. The signal from the air/fuel ratio sensor indicates whether the air fuel ratio is richer or leaner compared to the theoretical level. This leads reduction in fuel injection amount when the air fuel ratio is in rich condition, or increase in fuel injection amount when the air fuel ratio is in lean condition.

By factors including the difference between engines, fatigue period, and change in operation environment, the short term fuel correction varies from the ideal theoretical value. In the long term fuel correction, the whole fuel correction is controlled. By the long term fuel correction, the long term deviation of the fuel correction is corrected from the ideal theoretical value. The long term deviation is acquired as a result of the short term fuel correction.

When both of the long term and short term fuel corrections are leaner or richer than the pre-defined value, it is determined as abnormal and the MIL illuminates, then the DTC is recorded.

DTC No.	DTC detection condition	Suspected parts
P2096	Sub fuel trim is extremely in rich state with air fuel ratio feedback stable in the warmed up engine. (2 trips detection logic)	•Intake system •Fuel injector ASSY (port injection) •Fuel injector ASSY (cylinder injection) •Intake air flow meter SUB-ASSY •E.F.I. water temperature sensor •Fuel pressure •Gas leakage from exhaust system •Open/short circuits in the air/fuel ratio sensor •Air / fuel ratio sensor •PCV valve and hose •PCV hose connection •ECM •Wiring harness or connector
P2097	Sub fuel trim is extremely in lean state with air fuel ratio feedback stable in the warmed up engine. (2 trips detection logic)	

ES

NOTE:

- When DTCP2096 is set, the actual air fuel ratio is in lean state. When DTCP2097 is set, the actual air fuel ratio is in rich state.
- If the vehicle runs out of gas, the air fuel ratio becomes lean and DTCP2096 may be set. In this case, the MIL illuminates.

MONITOR DESCRIPTION

During closed loop fuel control, if fuel injection amount is not within the value estimated by ECM, long term fuel correction value may vary. When the deviation of the short term fuel correction value does not change, the long term fuel correction is adjusted. The deviation of fuel injection amount estimated by ECM also has an influence on the average fuel correction learning value which is the sum of the short term fuel correction average (F/B correction value) and long term fuel correction average (air fuel ratio learning value). If the fuel correction learning value average exceeds the abnormal threshold value, ECM determines it as fuel system failure and the DTC is recorded.

Monitor strategy

Related DTCs	P2096: Post Catalyst Fuel Trim System Too Lean (Bank 1) P2097: Post Catalyst Fuel Trim System Too Rich (Bank 1)
Required Sensors/Components (Main)	Fuel system
Required Sensors/Components (Related)	Air/fuel ratio sensor, intake air flow meter SUB-ASSY, crank-shaft position sensor
Frequency of Operation	Continuous
Duration	1 second
MIL Operation	2 operation cycle
Sequence of Operation	None

TYPICAL ENABLING CONDITIONS

Overlap prohibited DTC	P0037, P0038 (oxygen sensor - heater) P0122, P0123, P0222, P0223 (Throttle position sensor) P0137, P0138 (oxygen sensor - lack of continuity in circuit) P0171, P0172 (fuel system feedback control) P0604, P0605 (ECM ROM) P1160 (throttle return spring) P2102 (throttle actuator control motor) P2109 (Throttle position sensor minimum stop) P2119 (Throttle actuator control) P2122, P2123, P2127, P2128 (Accelerator Pedal Position Sensor (APPS) circuit) P2135 (Throttle position sensor (TPS) degree of correlation) P2138 (Accelerator pedal position sensor (APPS) degree of correlation)
F/B operation condition	Closed loop

Intake amount per second	10 g/sec or more
Fluctuation in intake amount during half engine cycle	Less than 0.02 g/rev
Secondary Oxygen sensor element estimated temperature	500°C or more
Warm-up increase correction	No correction
Integral air intake amount in stoichiometry	600 g or more

TYPICAL MALFUNCTION THRESHOLDS

P2096

Long term fuel correction control value after catalyst	-0.037 or less

P2097

Long term fuel correction control value after catalyst	0.028 or more

Circuit figure

For circuit figure, refer to ES - 610.

Description of functions

Test drive

Perform test drive to check if the DTC recurs.

NOTE:

Both of test drive A and B can recur the diagnostic code.

Test drive A

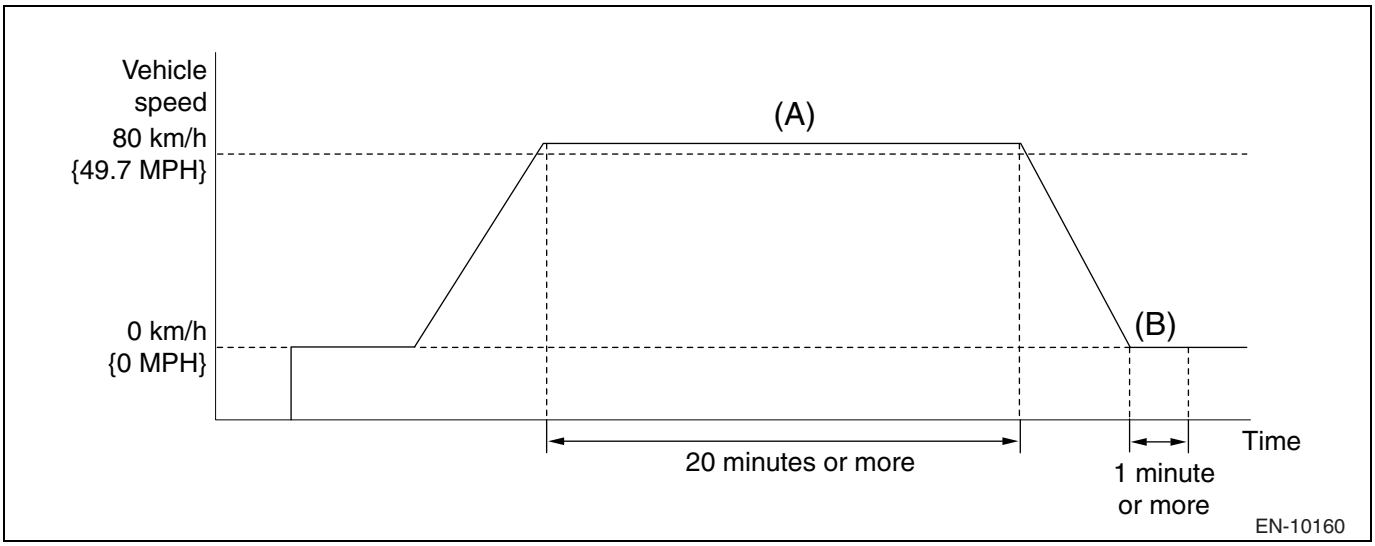

1. Connect the SSM4 to the DLC3.
2. Turn the ignition switch to ON.
3. Turn on the SSM4.
4. Follow the SSM4 on-screen instructions to clear the DTCs. (Refer to ES - 28)
5. Turn the ignition switch to OFF, and wait for 30 seconds.
6. Turn the ignition switch to ON.
7. Turn on the SSM4.
8. Start the engine and let it warm up until the engine coolant temperature stabilizes. (at 75°C {167°F} or more).
9. Perform driving test as follows.
   WARNING:
   When performing this driving test, always observe the applicable traffic laws such as the speed limit.
   (a) Drive at 80 km/h {49.7 MPH} or more for 20 minutes or more. (A)
   (b) Stop the vehicle.
   (c) Idle the engine for 1 minute or more. (B)
10. Follow the SSM4 on-screen instructions to check the DTC. (Refer to ES - 28)

Test drive B

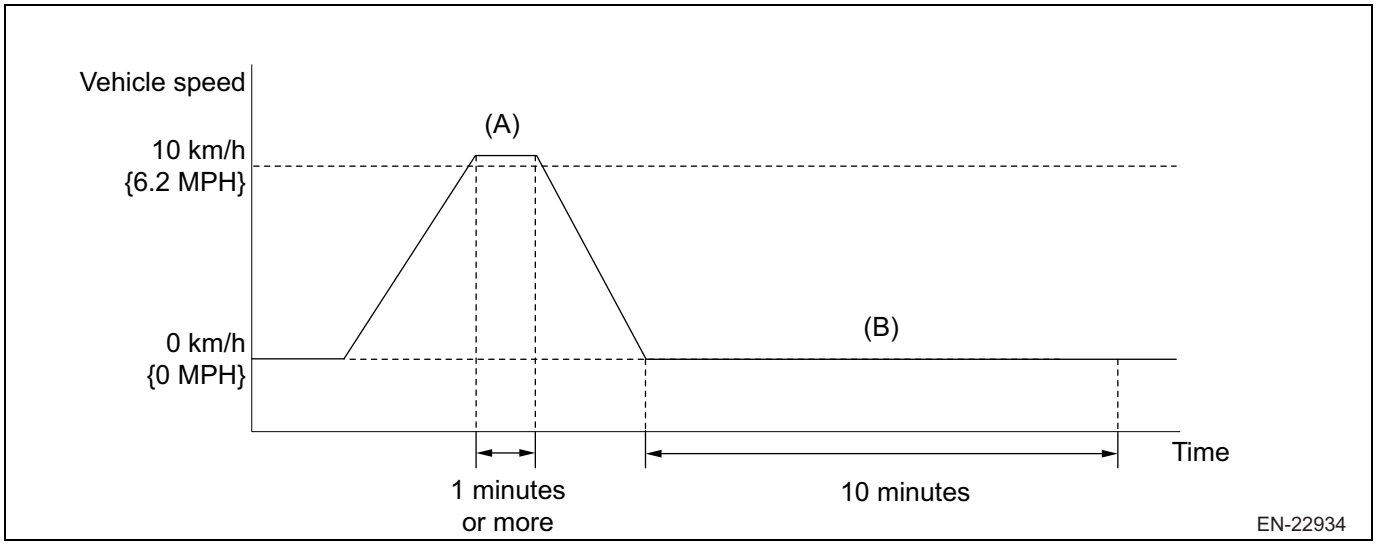

1. Connect the SSM4 to the DLC3.
2. Turn the ignition switch to ON.
3. Turn on the SSM4.
4. Follow the SSM4 on-screen instructions to clear the DTCs. (Refer to ES - 28)
5. Turn the ignition switch to OFF, and wait for 30 seconds.
6. Turn the ignition switch to ON.
7. Turn on the SSM4.
8. Start the engine.
9. Perform driving test as follows.
   WARNING:
   When performing this driving test, always observe the applicable traffic laws such as the speed limit.
   (a) Drive at 10 km/h {6.2 MPH} or more for 1 minute or more. (A)
   (b) Stop the vehicle.
   (c) Idle the engine for 10 minutes or more. (B)
10. Follow the SSM4 on-screen instructions to check the DTC. (Refer to ES - 28)

Inspection steps

1. Connect the SSM4 to the DLC3.
2. Start the engine.
3. Turn on the SSM4.
4. Warm up the engine at 2500 rpm for approximately 90 seconds.
5. Select the following menu items using the SSM4. : [Each System] / [Engine Control System] / [Work Support] / [Active Test] / [Cylinder Fuel Rate]
6. Execute [Cylinder Fuel Rate] with the engine idling.
7. Inspect [A/F Sensor #11] and [A/F Sensor #12] of the data display when running the active test.

NOTE:

- Fluctuate the fuel injection amount in a range of -12 % to +12 %.
- The sensors respond according to increase/decrease in fuel injection amount.

Item	Fuel injection volume	Status	Output voltage of air/fuel ratio sensor and oxygen sensor
A/F Sensor #11	+12%	Rich	Less than 2.0V
	-12%	Lean	2.4V or more
Oxygen sensor #12	+12%	Rich	0.55 V or more
	-12%	Lean	Less than 0.4V

CAUTION:

There is a delay of a few seconds in the air/fuel ratio sensor voltage output, and there is a maximum delay of approx. 20 seconds in the oxygen sensor voltage output.

Case	Air/fuel ratio sensor (sensor 1) output voltage	Oxygen sensor (sensor 2) output voltage	Point which may have problems
1	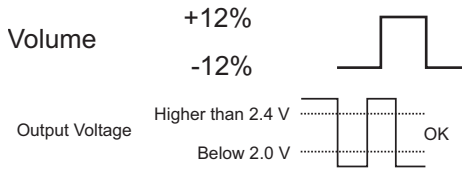	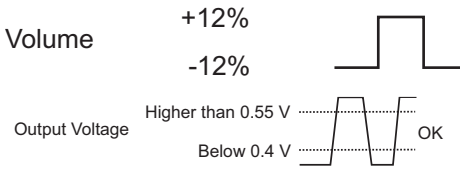	-
2	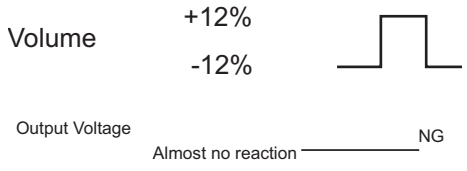	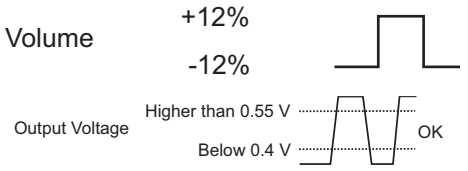	• Air / fuel ratio sensor • Air/fuel ratio sensor heater • Air/fuel ratio sensor circuit
3	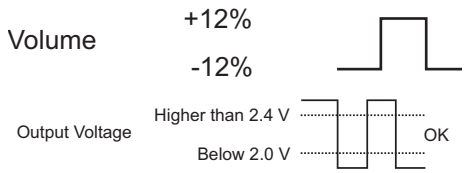	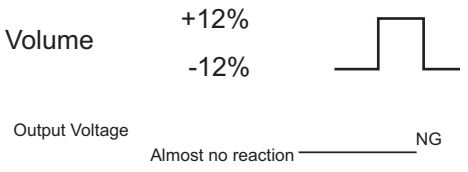	• Oxygen sensor • Oxygen sensor heater • Oxygen sensor circuit
4	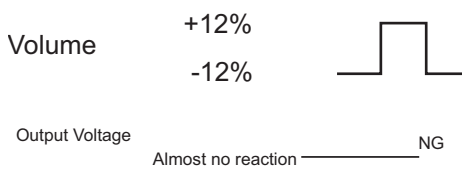	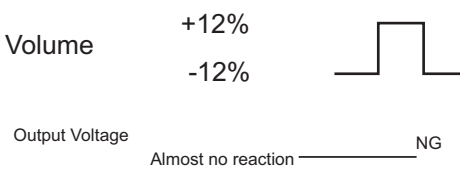	• Fuel injector ASSY • Fuel pressure • Gas leakage from exhaust system (air/fuel ratio is in very rich or lean status)

NOTE:

- Read the freeze frame data using the SSM4. A part of the engine running conditions under which the engine trouble occurred is recorded in the freeze frame data, which is useful for troubleshooting.
- When air/fuel ratio becomes in rich status, the air/fuel ratio sensor voltage may drop. Check the conditions that can cause the engine to be in rich status.
- When air/fuel ratio becomes in lean status, the air/fuel ratio sensor voltage may rise. Check the conditions that can cause the engine to be in lean status.

1	Read DTC

(1) Connect the SSM4 to the DLC3.
(2) Turn the ignition switch to ON.
(3) Turn on the SSM4.
(4) Follow the SSM4 on-screen instructions to check the DTCs. (Refer to ES - 28)

Result

Result	Go to
DTC P2096 or P2097 is output.	A
P2096 or P2097 and other DTCs are output.	B

NOTE:
If any DTCs other than P2096 or P2097 are displayed, troubleshoot them first.

B	To corresponding DTC chart (refer to ES - 12)

A

2	Performing of SSM4 [Active Test] ([Injection Mode Change])

(1) Connect the SSM4 to the DLC3.
(2) Start the engine.
(3) Select the following menu items using the SSM4. : [Each System] / [Engine Control System] / [Work Support] / [Active Test] / [Injection Mode Change] / [Port injection]
(4) Check [Short term fuel trim B1] and [Long term fuel trim B1] data readings during [Active Test].

ES

Standard value

Item name	Inspection conditions	Standard value
Sum of [Short term fuel trim B1] and [Long term fuel trim B1]	[Active Test] - [Injection Mode Change] - [Port injection] in progress Idling	Within ±19%

(5) Check DTC using SSM4.
(6) Check [Short term fuel trim B1] and [Long term fuel trim B1] data readings during the active test.

Standard value

Item name	Inspection conditions	Standard value
Sum of [Short term fuel trim B1] and [Long term fuel trim B1]	[Active Test] - [Injection Mode Change] - [Cylinder injection] in progress Idling	Within ±19%

Result

Injection mode change Port injection	Injection mode change Direct injection	Go to
OK	OK	A
OK	NG	B
NG	OK	C
NG	NG	D

B → Go to Step 17.

C → Go to Step 22.

D → Go to Step 4.

A

3	Check if the engine has ever stalled due to lack of fuel.

(1) Has the engine ever stalled due to lack of fuel?

No → Inspection for problems that do not normally occur (Refer to ES - 12)

Yes

The DTC was recorded due to a lack of fuel situation during driving that occurred in the past

4	Inspection of the PCV hose

(1) Check the PCV hose for poor connections and damage.
Criteria: The PCV valve and hose are connected properly and not damaged.

NG → Repair or replacement of the PCV hose

OK

ES

5	Intake system inspection

(1) Inspect the intake system. (Refer to IE - 4)

NG → Repair or replacement of intake system

OK

6	Reading of SSM4 data (A/F sensor output signal (bank 1 sensor 1))

(1) Connect the SSM4 to the DLC3.
(2) Turn the ignition switch to ON.
(3) Turn on the SSM4.
(4) Run the engine at 2500 rpm for approximately 90 seconds for warm-up.
(5) Select the following menu items using the SSM4. : [Each System] / [Engine Control System] / [Work Support] / [Active Test] / [Cylinder Fuel Rate]
(6) Execute [Cylinder Fuel Rate] with the engine idling.
(7) Inspect [A/F Sensor #11] and [Oxygen sensor #12] of the data display when running the [Active Test].
NOTE:
- Fluctuate the fuel injection amount in a range of -12 % to +12 %.
- The output voltage for the air/fuel ratio sensor is delayed a few seconds, while the output voltage for the oxygen sensor is delayed for a maximum of approximately 20 seconds.
- If the sensor output voltage does not fluctuate when running [Active Test] (almost no response), there may be a malfunction in the sensor.

Voltage

Item	Fuel injection volume	Status	Output voltage of air/fuel ratio sensor and oxygen sensor
[A/F Sensor #11]	12%	Rich	Less than 2.0V
	-12%	Lean	2.4V or more
[Oxygen sensor #12]	12%	Rich	0.55 V or more
	-12%	Lean	Less than 0.4V

Result

AFS Voltage B1S1	Oxygen sensor voltage B1S2	A/F condition and A/F sensor condition	Possible faulty parts	Go to
Lean / rich	Lean / rich	Normal	-	A

AFS Voltage B1S1	Oxygen sensor voltage B1S2	A/F condition and A/F sensor condition	Possible faulty parts	Go to
Lean	Lean	Actual air/fuel ratio is lean	• Ventilation valve and hose • Ventilation hose connection • Injector ASSY (port injection) • Gas leakage from exhaust system • Air intake system • Fuel pressure • Intake air flow (MAF) meter • Engine water temperature (ECT) sensor	A
Rich	Rich	Actual air/fuel ratio is rich	• Gas leakage from exhaust system • Ignition system • Fuel pressure • Intake air flow (MAF) meter • Engine water temperature (ECT) sensor	A
Lean	Lean / rich	Malfunction in the air/fuel ratio sensor	Air / fuel ratio sensor	B
Rich	Lean / rich	Malfunction in the air/fuel ratio sensor	Air / fuel ratio sensor	B

- Lean status: When [Active Test] is performed, the output voltage of the air/fuel ratio is 2.4 V or more, and the output voltage of oxygen sensor remains at less than 0.4V.
- Rich status: When [Active Test] is performed, the output voltage of the air/fuel ratio sensor remains at less than 2.0 V, and the output voltage of the oxygen sensor remains at 0.55 V or more.
- Lean/rich status: When [Active Test] is performed, the output voltages of the air/fuel ratio sensor and oxygen sensor are normal.
- For details of [A/F Sensor #11] and [Oxygen sensor #12] data monitor menus, check [Data monitor] / [Active Test]. (Refer to ES - 43)

B → Go to Step 10.

A

7	Reading of SSM4 data ([Coolant Temp.])

(1) Connect the SSM4 to the DLC3.
(2) Turn the ignition switch to ON.
(3) Turn on the SSM4.
(4) Select the following menu items using the SSM4. : [Each System] / [Engine Control System] / [Data monitor] / [Coolant Temp.]
(5) Read [Coolant Temp.] both when the engine is cold and warmed up.
Criteria:
Engine before warmed up: Equal to ambient temperature
Engine after warmed up: 75 to 100°C {167 to 212°F}

NG → Replacement of E.F.I. water temperature sensor (refer to ES - 695)

OK

8	Reading of SSM4 data ([Mass Air Flow])

(1) Connect the SSM4 to the DLC3.
(2) Turn the ignition switch to ON.
(3) Turn on the SSM4.
(4) Start the engine.
(5) Select the following menu items using the SSM4. : [Each System] / [Engine Control System] / [Data monitor] / [Mass Air Flow], [Coolant Temp.] and [Engine Speed]
(6) Idle the engine until the coolant temperature reaches 75°C {167°F} or more.
(7) Read [Mass Air Flow] with engine speed at 3000 r/min.
Standard value: 8 to 13 g/s {0.28 to 0.46 oz/s} (shift position: N, A/C: OFF)

NG → Go to Step 23.

OK

9	Exhaust gas leakage check

(1) Make sure that exhaust gas is not leaking from connections of exhaust pipes and installation areas of sensors.

OK → Go to Step 13.

NG → Repair of exhaust gas leakage

10	Unit inspection of the air/fuel ratio sensor

(1) Perform a unit inspection on the air/fuel ratio sensor. (Refer to ES - 708)

NG → Replacement of the air/fuel ratio sensor (Refer to ES - 707)

OK

11	Inspection of wiring harnesses and connectors (air/fuel ratio sensor - ECM)

NG → Repair or replacement of wiring harness or connector

OK

12	Replacement of the air/fuel ratio sensor

(1) Replace the air/fuel ratio sensor. (Refer to ES - 707)

Next

13	Perform test drive for operation check

(1) Connect the SSM4 to the DLC3.
(2) Turn IG to ON and start SSM4.
(3) Follow the SSM4 on-screen instructions to clear the DTCs. (Refer to ES - 28)
(4) Turn the ignition switch to OFF, and wait for 30 seconds.
(5) Turn IG to ON and start SSM4.
(6) Perform test drive. (Refer to "Test drive" under "Description of functions")
WARNING:
When performing this driving test, observe the applicable traffic laws such as the speed limit.
(7) Follow the SSM4 on-screen instructions to check the DTC. (Refer to ES - 28)

Result

Result	Go to
P2096 or P2097 is output.	A
No DTC is output	B

B → Complete

A

14	Fuel pressure inspection (low-pressure side)

(1) Check the fuel pressure (low-pressure side). (Refer to FU - 47)

Result

Result	Go to
NG	A
OK	B

B → Go to Step 23.

A

15	Unit inspection of the fuel pump ASSY (low-pressure side)

(1) Perform a unit inspection on the fuel pump (low-pressure side) (Refer to FU - 56)

NG → Replacement of the fuel pump ASSY (low-pressure side) (Refer to FU - 47)

OK

16	Fuel leakage check (low-pressure side)

(1) Check for fuel leakage. (Low-pressure side)
Criteria: There is no fuel leakage

NG → Repair or replace fuel leaking components (low-pressure side)

OK

Check of fuel pump, pressure regulator, fuel line, and filter

ES

17	Fuel pressure sensor check

(1) Connect the SSM4 to the DLC3.
(2) Turn the ignition switch to ON.
(3) Turn on the SSM4.
(4) Start the engine.
(5) Select the following menu items using the SSM4. : [Each System] / [Engine Control System] / [Data monitor] / [Fuel Rail Pressure]
(6) Check that the fuel pressure varies.
Standard value:
Idling: 3000 to 5000kPa {30.6 to 50.9kgf/cm^2, 435 to 725psi}
NOTE:
Turn off the A/C switch and all the accessory switches, shift the shift lever to N or P position, and completely warm up the engine.

NG → Go to Step 20.

OK

18	Performing of SSM4 [Active Test] ([Injection Mode Change])

(1) Connect the SSM4 to the DLC3.
(2) Start the engine.
(3) Select the following menu items using the SSM4. : [Each System] / [Engine Control System] / [Work Support] / [Active Test] / [Injection Mode Change] / [Cylinder injection]
(4) Check [Target Fuel Pressure(High)], [Short term fuel trim B1] and [Long term fuel trim B1] data readings during [Active Test].

Result

Item name		Inspection conditions	Go to
Target Fuel Pressure(High)	Sum of [Short term fuel trim B1] and [Long term fuel trim B1]		
3 to 5 MPa	-	• [Active Test] - [Injection Mode Change] - [Cylinder injection] in progress • Idling • Shift lever is at N or P position • A/C OFF	A
5 MPa or more	+20% or more		B
5 MPa or more	Less than -20%		C
Less than 3 MPa	+20% or more		C
Less than 3 MPa	Less than -20%		D

B → Fuel pressure sensor replacement

C → Go to Step 21.

D → Replacement of the engine control computer (Refer to ES - 670)

A

19	Performing of SSM4 [Active Test] ([Injection Mode Change])

(1) Connect the SSM4 to the DLC3.
(2) Start the engine.
(3) Select the following menu items using the SSM4. : [Each System] / [Engine Control System] / [Work Support] / [Active Test] / [Injection Mode Change] / [Cylinder injection]
(4) Check [Target Fuel Pressure(High)], [Short term fuel trim B1] and [Long term fuel trim B1] data readings during [Active Test].

Result

Item name		Inspection conditions	Go to
Target Fuel Pressure(High)	Sum of [Short term fuel trim B1] and [Long term fuel trim B1]		
3 to 5 MPa	Less than -25%	• [Active Test] - [Injection Mode Change] - [Cylinder injection] in progress • Idling • Shift lever is at N or P position • A/C OFF	A
3 to 5 MPa	+30% or more		
3 to 5 MPa	-25 to +25%		B

B → Inspection for problems that do not normally occur (Refer to ES - 28)

A

Replacement of the fuel injector ASSY (direct injection side) (Refer to FU - 31)

20	Misfire count check

(1) Connect the SSM4 to the DLC3.
(2) Turn the ignition switch to ON.
(3) Turn on the SSM4.
(4) Start the engine.
(5) Select the following menu items using the SSM4. : [Each System] / [Engine Control System] / [Work Support] / [Active Test] / [Injection Mode Change] / [Cylinder injection]
(6) Idle the engine.
(7) Check the values of [Cylinder #1 Misfire Count] through [Cylinder #4 Misfire Count] in the data display while performing [Active Test].
When any cylinder has no misfire counts, perform the following steps.
(a) Shift the shift lever to D position.
(b) Check all misfire rates displayed on SSM4.

Result

Result	Go to
No misfire, random misfires at all cylinders	A

Result	Go to
Misfire at specific cylinders	B

B → Replacement of the fuel injector ASSY (direct injection side) (Refer to FU - 31)

A

ES

21	Injector driver check

(1) Replace the problematic injector with one which has no problem from another vehicle. (Refer to FU - 31)
CAUTION:
Do not disconnect or reconnect the connector with IG SW ON to prevent damage to the injector driver (EDU).
(2) Connect the SSM4 to the DLC3.
(3) Turn the ignition switch to ON.
(4) Turn on the SSM4.
(5) Follow the SSM4 on-screen instructions to clear the DTCs. (Refer to ES - 28)
(6) Turn the ignition switch to OFF, and wait for 30 seconds.
(7) Turn IG to ON and start SSM4.
(8) Start the engine and warm up.
(9) Perform test drive. (Refer to "Test drive" under "Description of functions")
(10) Follow the SSM4 on-screen instructions to check the DTC. (Refer to ES - 28)

Result

Result	Go to
P2096 or P2097 is output.	A
No DTC is output	B

B → End (injector driver failure)

A

Replacement of fuel pump ASSY (high-pressure side) (Refer to FU - 58)

22	Unit inspection for the fuel injector ASSY (port injection side)

(1) Check the fuel injector (port injection side) as a single part. (Refer to FU - 29)

NG → Replacement of the fuel injector ASSY (port injection side) (Refer to FU - 21)

OK

Replacement of the engine control computer (Refer to ES - 670)

23	Check wiring harness and connector (connection of intake air flow meter SUB-ASSY connector)

(1) Check the connection, engagement, and terminal contact pressure of the wiring harness and connector between the intake air flow meter SUB-ASSY and ECM. (Refer to IN - 36)
NOTE:
If abnormal, repair them.

Next

24	Perform test drive for operation check

(1) Connect the SSM4 to the DLC3.
(2) Turn IG to ON and start SSM4.
(3) Follow the SSM4 on-screen instructions to clear the DTCs. (Refer to ES - 28)
(4) Turn the ignition switch to OFF, and wait for 30 seconds.
(5) Turn IG to ON and start SSM4.
(6) Start the engine and warm up.
(7) Perform test drive. (Refer to "Test drive" under "Description of functions")
WARNING:
When performing this driving test, observe the applicable traffic laws such as the speed limit.
(8) Follow the SSM4 on-screen instructions to check the DTC. (Refer to ES - 28)

Result

Result	Go to
P2096 or P2097 is output.	A
No DTC is output	B

B → Complete

A

25	Check wiring harness and connector (intake air flow meter SUB-ASSY - ECM)

(1) Disconnect the connector of the intake air flow meter SUB-ASSY.
(2) Disconnect the ECM connector.
(3) Measure the resistance between the terminals. (For terminal arrangement, refer to ES - 36.)

Resistance (open circuit check)

Inspection terminals	Inspection conditions	Standard value
C33-22 (VG) - C16-5 (VG)	Always	Less than 1 Ω
C33-29 (E2G) - C16-4 (E2G)	Always	Less than 1 Ω

Resistance (short circuit check)

Inspection terminals	Inspection conditions	Standard value
C33-22 (VG) or C16-5 (VG) - chassis ground	Always	10 k Ωor more

NG → Repair or replacement of wiring harness or connector

OK

26	Intake air flow meter SUB-ASSY replacement

(1) Replace the intake air flow meter SUB-ASSY. (Refer to ES - 681)
NOTE:
If the result of check in Step 8 is normal, go to the next step without replacing the intake air flow meter SUB-ASSY.

ES

Next

27	Perform test drive for operation check

(1) Connect the SSM4 to the DLC3.
(2) Turn IG to ON and start SSM4.
(3) Follow the SSM4 on-screen instructions to clear the DTCs. (Refer to ES - 28)
(4) Turn the ignition switch to OFF, and wait for 30 seconds.
(5) Turn IG to ON and start SSM4.
(6) Start the engine and warm up.
(7) Perform test drive. (Refer to "Test drive" under "Description of functions")
WARNING:
When performing this driving test, observe the applicable traffic laws such as the speed limit.
(8) Follow the SSM4 on-screen instructions to check the DTC. (Refer to ES - 28)

Result

Result	Go to
P2096 or P2097 is output.	A
No DTC is output	B

B → Complete

A

Replacement of the engine control computer (Refer to ES - 670)

DTC	P2101	ETC motor drive circuit
DTC	P2102	ETC motor relay power supply normally OFF
DTC	P2103	ETC motor relay power supply normally ON

Circuit description
The accelerator pedal sensor ASSY, which is located on the accelerator pedal, sends the accelerator opening angle data to the engine control computer. The engine control computer determines throttle opening angle suitable for a driving condition and drives the throttle motor. The throttle valve opening angle data is fed back to the engine control computer from the throttle position sensor. When this DTC is recorded, the engine control computer shuts off electric power supply to the throttle motor, allowing the

return spring to act on the throttle valve so that the valve returns to the predetermined opening angle position. Also, fuel injection is cut off so that the engine output is adjusted based on the accelerator opening angle to allow the vehicle to go into limp-in mode.

DTC No.	DTC detection condition	Suspected parts
P2101	When any of the following conditions is met (1 trip detection logic): • Throttle actuator electric current is 16A or more. • Internal temperature of throttle actuator drive circuit is 175°C {347°F} or more.	•Throttle body •ECM
P2102	ECM turns ETCS relay to ON, but throttle actuator power supply voltage is 5 V or less. (1 trips detection logic)	•Open circuit in throttle actuator circuit •Throttle body •ETCS relay •ECM
P2103	ECM turns ETCS relay to OFF, but throttle actuator power supply voltage is 5 V or more. (1 trips detection logic)	•Short circuit in throttle actuator circuit •Throttle body •ETCS relay •ECM

ES

MONITOR DESCRIPTION

ECM monitors electrical current via the throttle actuator and detects failure or open circuit in the throttle actuator according to the value. If the current is abnormal, ECM determines that there is a problem in the throttle actuator. Also, if the throttle valve does not operate correctly (such as when intrusion occurs), ECM determines that there is a problem. In this case, the ECM turns on the MIL and records the DTC.

Monitor strategy

Related DTCs	P2101: Throttle actuator control motor circuit continuity P2102: Throttle actuator control motor circuit continuity P2103: Throttle actuator control motor circuit continuity
Required Sensors/Components (Main)	Throttle actuator (throttle body)
Required Sensors/Components (Related)	None
Frequency of Operation	Continuous
Duration	0.512 seconds: P2101 0.352 seconds: P2102 0.6 seconds: P2103
MIL Operation	Immediately after
Sequence of Operation	None

TYPICAL ENABLING CONDITIONS

All

Overlap prohibited DTC	None

P2101

ETCS relay	ON
Battery Voltage	6V or more

P2102

ETCS relay	ON
Battery Voltage	11V or more

P2103

ETCS relay	OFF
Battery Voltage	6V or more

TYPICAL MALFUNCTION THRESHOLDS

P2101

Abnormal flag from throttle actuator operation IC	Set

P2102

Throttle actuator supply voltage	5V or less

P2103

Throttle actuator supply voltage	5V or more

ES

Circuit figure

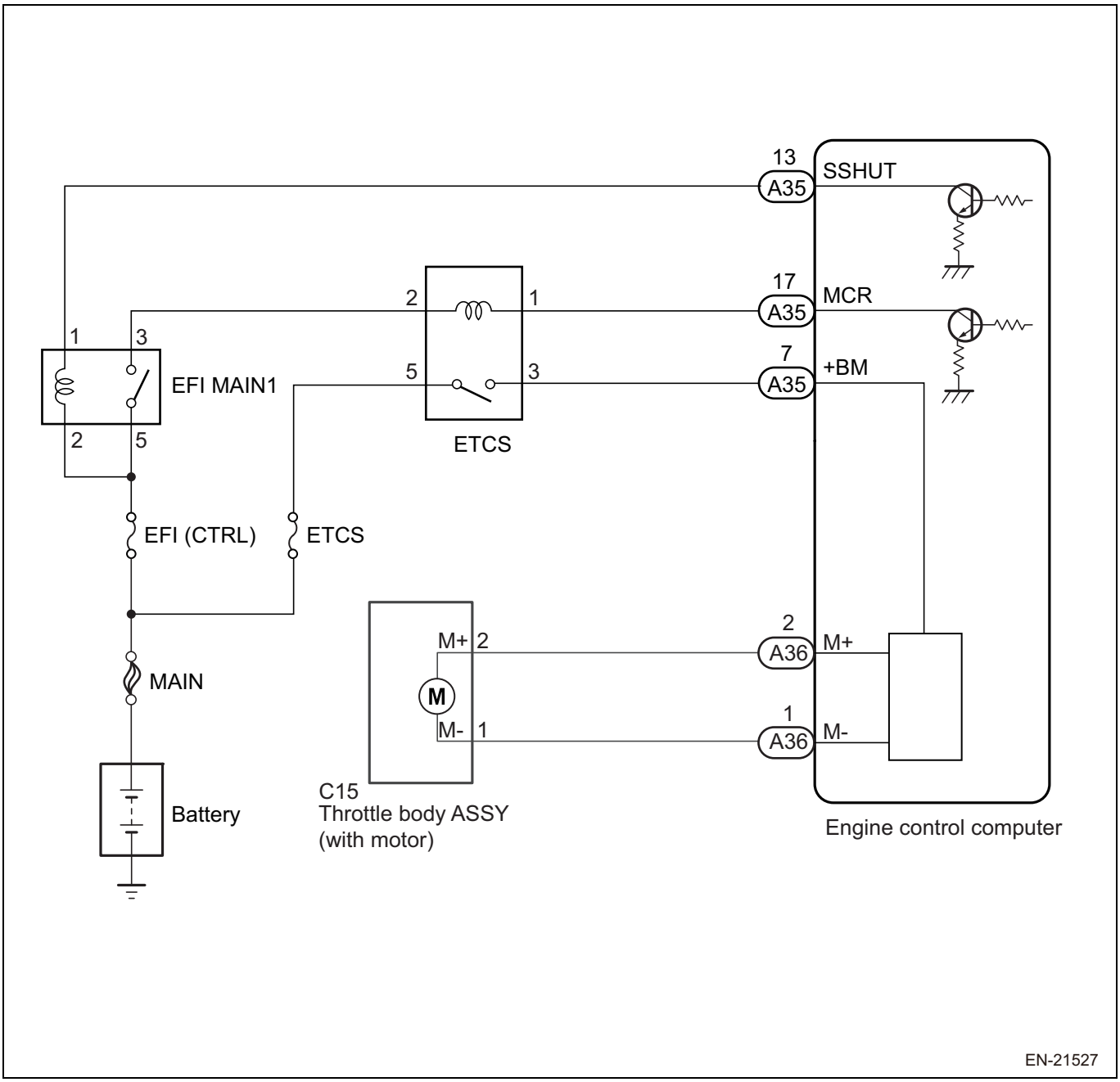

Description of functions

Test drive

Perform test drive to check if the DTC recurs.

1. Connect the SSM4 to the DLC3.
2. Turn the ignition switch to ON.

3. Turn on the SSM4.
4. Follow the SSM4 on-screen instructions to clear the DTCs. (Refer to ES - 28)
5. Turn the ignition switch to OFF, and wait for 30 seconds.
6. Turn the ignition switch to ON.
7. Turn on the SSM4.
8. Start the engine.
   NOTE:
   If the engine cannot be started, crank the engine for 10 seconds or more.
9. Idle the engine for 20 seconds or more.
10. Follow the SSM4 on-screen instructions to check the DTC. (Refer to ES - 28)

Inspection steps

WARNING:

- Before performing troubleshooting, check the fuse for this circuit.
- Never try to clean the throttle body ASSY (with motor).

NOTE:

Read the freeze frame data using the SSM4. A part of the engine running conditions under which the engine trouble occurred is recorded in the freeze frame data, which is useful for troubleshooting.

1	Check wiring harness and connector (throttle motor power supply voltage)

NOTE:

For the inspection procedure and precautions for wiring harnesses and connectors, refer to IN - 36.

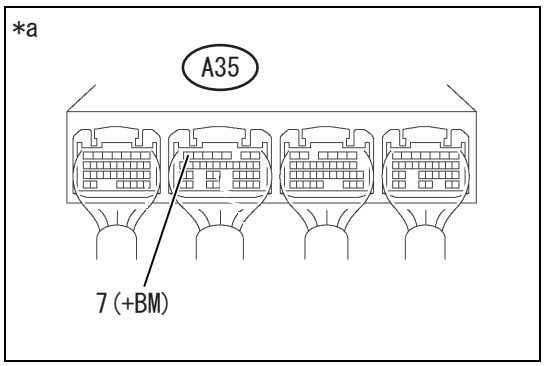

(1) Measure the voltage between the terminals. (For terminal arrangement, refer to ES - 36.)
   Voltage

Inspection terminals	Inspection conditions	Standard value
A35-7 (+BM) - chassis ground	IG ON	11 to 14 V
A35-7 (+BM) - chassis ground	IG OFF	0 to 1 V

Captions in illustration

*a	Connector connected (engine control computer)

NG → Go to Step 6.

OK

2	Throttle body ASSY (with motor) unit inspection

(1) Perform unit inspection of the throttle body ASSY (with motor). (Refer to ES - 668)

NG → Replacement of throttle body ASSY (with motor) (Refer to ES - 666)

OK

3	Check wiring harness and connector (engine control computer - throttle body ASSY (with motor))

NOTE:
For the inspection procedure and precautions for wiring harnesses and connectors, refer to IN - 36.

(1) Disconnect the throttle body ASSY (with motor) connector.
(2) Disconnect the connector for the engine control computer.
(3) Measure the resistance between the terminals. (Refer to ES - 36for the terminal arrangement)

ES

Resistance (open circuit check)

Inspection terminals	Inspection conditions	Standard value
A36-2 (M+) - C15-2 (M+)	Always	Less than 1 Ω
A36-1 (M-) - C15-1 (M-)	Always	Less than 1 Ω

Resistance (short circuit check)

Inspection terminals	Inspection conditions	Standard value
A36-2 (M+) and C15-2 (M+) - other terminals and chassis ground	Always	10 k Ωor more
A36-1 (M-) and C15-1 (M-) - other terminals and chassis ground	Always	10 k Ωor more

NG → Repair or replacement of wiring harness or connector

OK

4	Throttle body ASSY (with motor) unit inspection (visual inspection of throttle valve)

(1) Check for foreign materials in the area between the throttle valve and the housing.
Criteria: There are no foreign materials between the throttle valve and the housing.

NG → Removing foreign materials from inside the throttle body

OK

5	Throttle body ASSY (with motor) unit inspection (throttle valve operation check)

(1) Make sure the throttle valve smoothly moves from the full open position to the full closed position when moved by hand.
Criteria: Throttle valve moves smoothly.

NG → Replacement of throttle body ASSY (with motor) (Refer to ES - 666)

OK

Replacement of the engine control computer (Refer to ES - 670)

6	Relay unit inspection (ETCS relay)

(1) Perform ETCS relay unit inspection. (Refer to ES - 713)

NG → Relay replacement (ETCS relay)

OK

7	Check wiring harness and connector (ETCS relay - EFI MAIN1 relay - battery)

NOTE:
For the inspection procedure and precautions for wiring harnesses and connectors, refer to IN - 36.

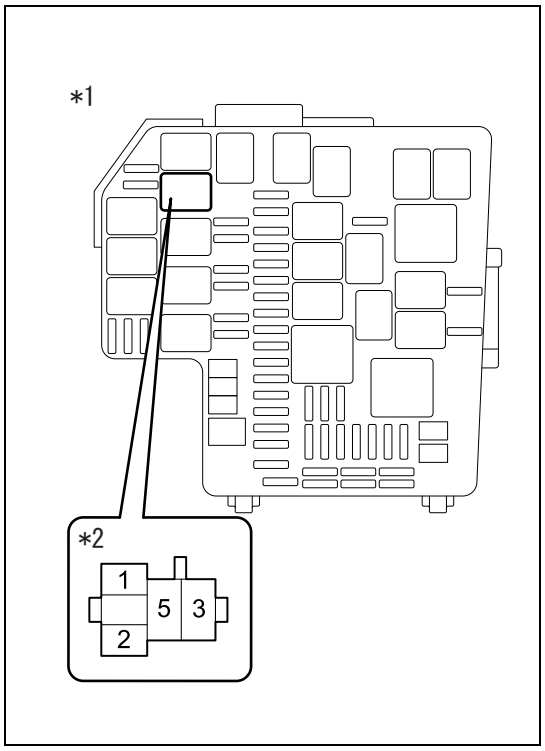

(1) Remove the ETCS relay from the engine compartment relay block.
(2) Measure the voltage between the terminals.

Voltage

Inspection terminals	Inspection conditions	Standard value
5 (ETCS relay holder) - chassis ground	Always	11 to 14 V
2 (ETCS relay holder) - chassis ground	IG ON	11 to 14 V

Result

Result	Go to
OK	A
5 (ETCS relay holder) is NG	B
2 (ETCS relay holder) is NG	C

CAUTION:
When using tester probes to take measurements at a holder, do not push them hard against the holder. Otherwise the holder could be damaged.

Captions in illustration

*1	Engine compartment relay block
*2	ETCS relay holder

B → Repair or replacement of wiring harness or connector (ETCS relay - battery)

C → Go to Step 9.

A

8	Check wiring harness and connector (engine control computer - ETCS relay)

NOTE:
For the inspection procedure and precautions for wiring harnesses and connectors, refer to IN - 36.
(1) Disconnect the connectors from the engine control computer.
(2) Remove the ETCS relay from the engine compartment relay block.
(3) Measure the resistance between the terminals. (For terminal arrangement, refer to ES - 36.)

Resistance (open circuit check)

Inspection terminals	Inspection conditions	Standard value
A35-17 (MCR) - 1 (ETCS relay holder)	Always	Less than 1 Ω
A35-7 (+BM) - 3 (ETCS relay holder)	Always	Less than 1 Ω

Resistance (short circuit check)

Inspection terminals	Inspection conditions	Standard value
A35-17 (MCR) and 1 (ETCS relay holder) - other terminals and chassis ground	Always	10 k Ωor more
A35-7 (+BM) and 3 (ETCS relay holder) - other terminals and chassis ground	Always	10 k Ωor more

CAUTION:
When using tester probes to take measurements at a holder, do not push them hard against the holder. Otherwise the holder could be damaged.

ES

NG → Repair or replacement of wiring harness or connector

OK

9	Relay unit inspection (EFI MAIN1 relay)

(1) Perform unit inspection of EFI MAIN1 relay. (Refer to ES - 713)

NG → Relay replacement (EFI MAIN1 relay)

OK

10	Check wiring harness and connector (ETCS relay - EFI MAIN1 relay)

NOTE:
For the inspection procedure and precautions for wiring harnesses and connectors, refer to IN - 36.

(1) Remove the ETCS relay from the engine compartment relay block.
(2) Remove the EFI MAIN1 relay from the engine compartment relay block.
(3) Measure the resistance between the terminals.

Resistance (open circuit check)

Inspection terminals	Inspection conditions	Standard value
3 (EFI MAIN1 relay holder) - 2 (ETCS relay holder)	Always	Less than 1 Ω

Resistance (short circuit check)

Inspection terminals	Inspection conditions	Standard value
3 (EFI MAIN1 relay holder) and 2 (ETCS relay holder) - other terminals and chassis ground	Always	10 k Ωor more

CAUTION:
When using tester probes to take measurements at a holder, do not push them hard against the holder. Otherwise the holder could be damaged.

NG → Repair or replacement of wiring harness or connector

OK

Inspection of the ECM power supply system (Refer to ES - 642)

DTC	P2122	Main accelerator pedal position sensor Low
DTC	P2123	Main accelerator pedal position sensor High
DTC	P2127	Sub-accelerator position sensor Low
DTC	P2128	Sub-accelerator position sensor High
DTC	P2138	Accelerator pedal position sensor characteristic

ES

Circuit description

The accelerator pedal sensor ASSY detects an accelerator opening angle. The sensor type used is non-contact type accelerator pedal sensor ASSY. This sensor uses Hall element which is capable of sensing magnetic field as an electrical signal. As the accelerator pedal moves, output voltage difference is produced linearly. This effect is called Hall effect. The accelerator pedal sensor ASSY has circuits with two equal output characteristics (VPA and VPA2). The sensor also sends output voltage which corresponds to accelerator pedal opening angle to the engine control computer. The engine control computer controls the throttle valve based on this output voltage.

NOTE:

This electronic throttle control system does not use throttle cables.

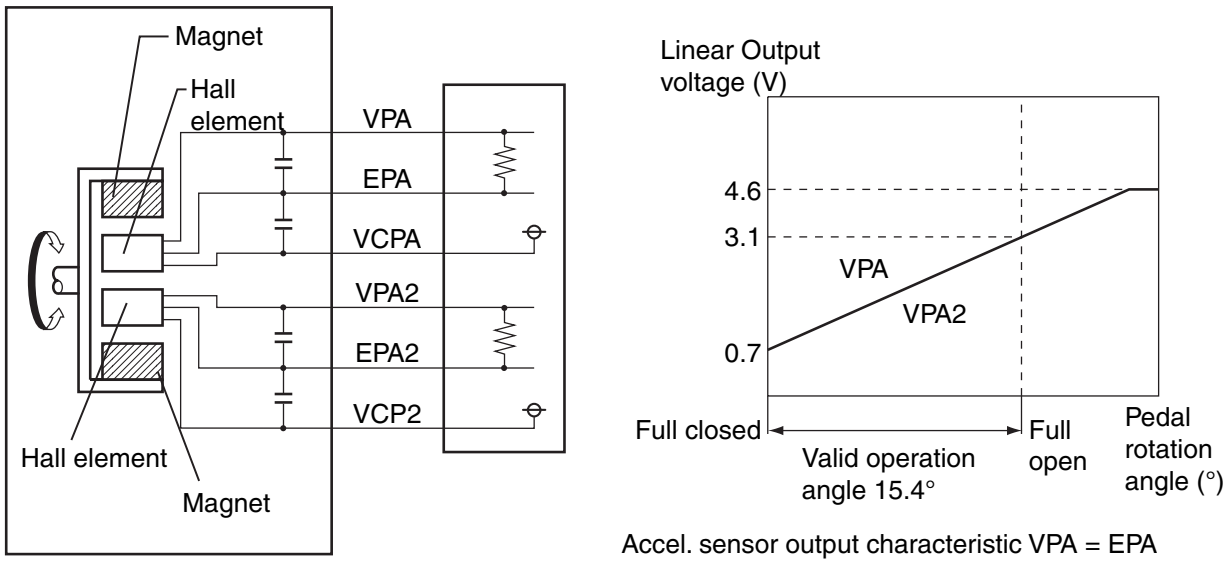

Accel. sensor output characteristic VPA = EPA

DTC No.	DTC detection condition	Suspected parts
P2122	When VPA voltage is less than 0.303V. (1 trips detection logic)	•Open/short circuit in accelerator pedal circuit •Accelerator pedal sensor ASSY •ECM
P2123	When VPA voltage is 4.737 V or more. (1 trips detection logic)	
P2127	When VPA2 voltage is less than 0.303V. (1 trips detection logic)	
P2128	When VPA2 voltage is 4.737 V or more. (1 trips detection logic)	
P2138	When difference between signals from VPA and VPA2 exceeds the threshold value. (1 trips detection logic)	

MONITOR DESCRIPTION

The accelerator pedal sensor is installed to the accelerator pedal bracket. The accelerator pedal sensor has 2 sensor elements and 2 signal outputs (VPA and VPA2). VPA is used for detecting actual accelerator pedal angle (engine control) and VPA2 is used for detecting VPA problems. If the difference of output voltage between VPA and VPA2 is out of the criteria, ECM determines that there is a problem in the accelerator pedal sensor. In this case, the ECM turns on the MIL and records the DTC.

Monitor strategy

Related DTCs	P2122: Accelerator pedal position sensor circuit continuity (Low voltage) (Sensor 1) P2123: Accelerator pedal position sensor circuit continuity (High voltage) (Sensor 1) P2127: Accelerator pedal position sensor circuit continuity (Low voltage) (Sensor 2) P2128: Accelerator pedal position sensor circuit continuity (High voltage) (Sensor 2) P2138: Accelerator pedal position sensor correlation rationality check
Required Sensors/Components (Main)	Accelerator pedal sensor ASSY
Required Sensors/Components (Related)	-
Frequency of Operation	Continuous
Duration	0.1 seconds: P2122, P2127, P2128 0.032 seconds: P2123 0.116 seconds: P2138
MIL Operation	Immediately after
Sequence of Operation	None

TYPICAL ENABLING CONDITIONS

P2122, P2123, P2127, P2128

Overlap prohibited DTC	None
Battery Voltage	6V or more

P2138

Overlap prohibited DTC	P2122, P2123, P2127, P2128 (Accelerator Pedal Position Sensor (APPS) circuit)
Battery Voltage	6V or more

TYPICAL MALFUNCTION THRESHOLDS

P2122

VPA voltage (accelerator pedal position)	Less than 0.303V (6.06%)

P2123

VPA voltage (accelerator pedal position)	4.737 V (94.74%) or more

P2127

VPA2 voltage (accelerator pedal position)	Less than 0.303V (6.06%)

P2128

VPA2 voltage (accelerator pedal position)	4.737 V (94.74%) or more

P2138

VPA - VPA2	4.44 % or more (varies depending on VPA2 - refer to "Map1")

Map1

Sub-accelerator pedal position	|Main accelerator pedal position - sub-accelerator pedal position|

Sub-accelerator pedal position 0 % or more and less than 1.82 %	4.04%
Sub-accelerator pedal position 1.82 % or more and less than 3.64 %	4.84%
Sub-accelerator pedal position 3.64 % or more and less than 6.06 %	5.04%
Sub-accelerator pedal position 6.06 % or more and less than 12.12 %	7.44%
Sub-accelerator pedal position 12.12 % or more and 100 % or less	9.44%
When learned value at full closed point is not updated.	20.65%

ES

Operation range

VPA voltage (accelerator pedal position)	0.394 to 4.729 V (7.88 to 94.58%)
VPA2 voltage (accelerator pedal position)	0.394 to 4.729 V (7.88 to 94.58%)

NOTE:
After checking DTC outputs, read the accelerator pedal opening angle from [Accelerator Sensor No1 Voltage] and [Accelerator Sensor No2 Voltage] of [Data monitor] using SSM4.

Circuit figure

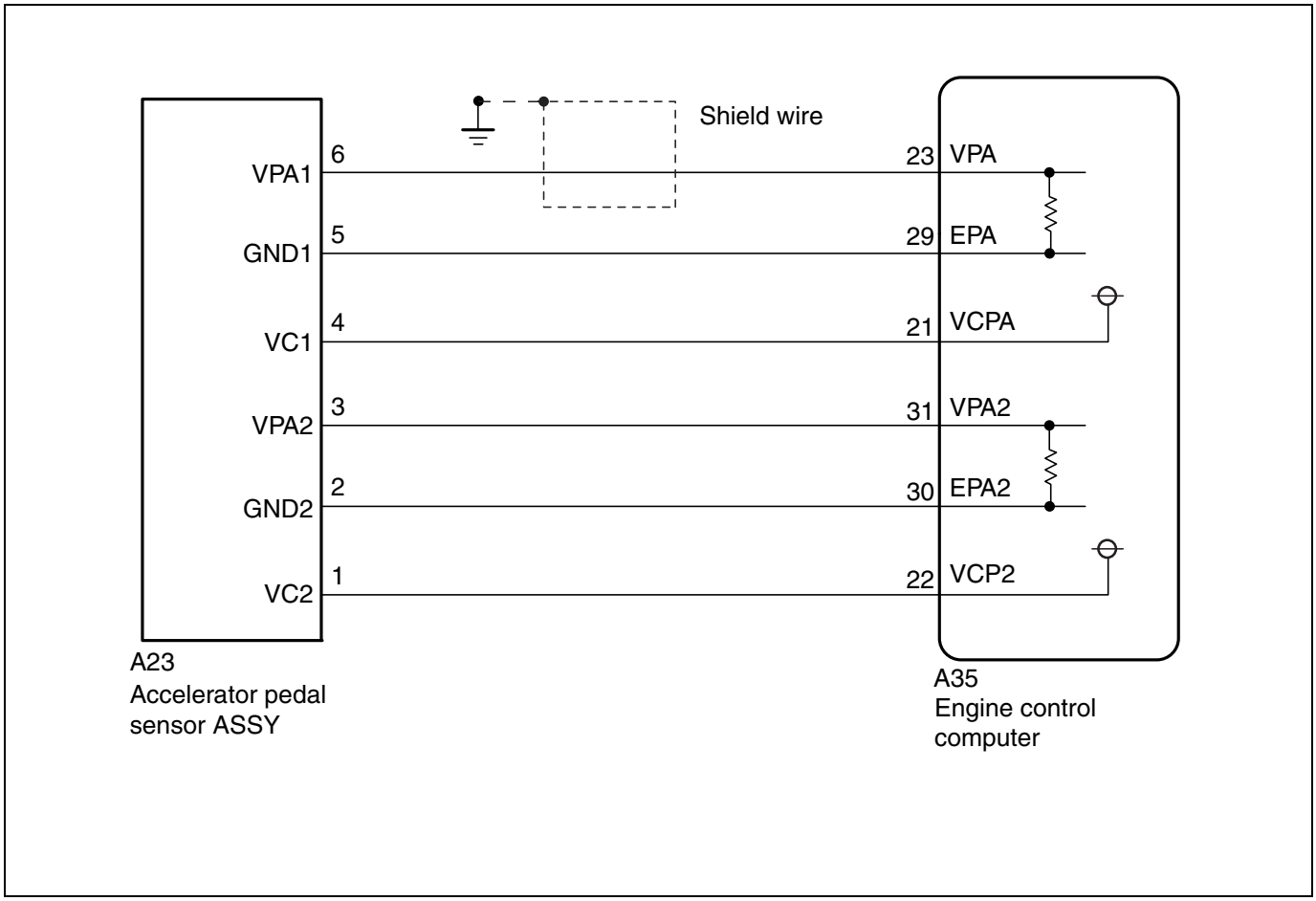

Description of functions
Test drive
Perform test drive to check if the DTC recurs.
1. Connect the SSM4 to the DLC3.

2. Turn the ignition switch to ON.
3. Turn on the SSM4.
4. Follow the SSM4 on-screen instructions to clear the DTCs. (Refer to ES - 28)
5. Turn the ignition switch to OFF, and wait for 30 seconds.
6. Turn the ignition switch to ON.
7. Turn on the SSM4.
8. Start the engine.
   NOTE:
   If the engine cannot be started, crank the engine for 10 seconds or more.
9. Idle the engine for 20 seconds or more.
10. Follow the SSM4 on-screen instructions to check the DTC. (Refer to ES - 28)

ES

Inspection steps
NOTE:
Read the freeze frame data using the SSM4. A part of the engine running conditions under which the engine trouble occurred is recorded in the freeze frame data, which is useful for troubleshooting.

1	Reading of SSM4 data ([Accelerator Sensor No1 Voltage] ·[Accelerator Sensor No2 Voltage])

(1) Connect the SSM4 to the DLC3.

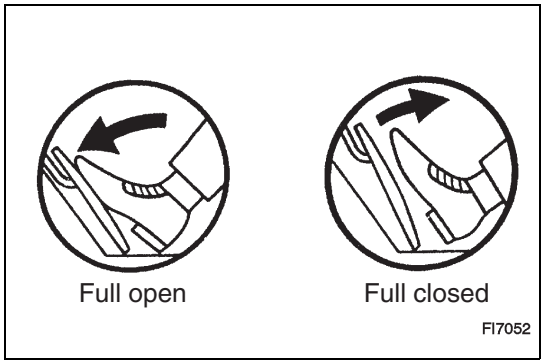

(2) Turn the ignition switch to ON.
(3) Turn on the SSM4.
(4) Select the following menu items using the SSM4. : [Each System] / [Engine Control System] / [Data monitor] / [Accelerator Sensor No1 Voltage], [Accelerator Sensor No2 Voltage]
(5) Read the [Accelerator Sensor No1 Voltage] and [Accelerator Sensor No2 Voltage] displayed on SSM4.

Voltage

Pedal condition	[Accelerator Sensor No1 Voltage]	[Accelerator Sensor No2 Voltage]	Difference in voltage between [Accelerator Sensor No1 Voltage] and [Accelerator Sensor No2]
Full closed	0.5 to 0.8 V	0.5 to 0.8 V	Less than 10 %
Full open	2.4 to 3.5 V	2.4 to 3.5 V	

Result

Result	Go to
Malfunction	A
Normal	B

B → Inspection for problems that do not normally occur (Refer to ES - 28)

A

2	Check wiring harness and connector (engine control computer - accelerator pedal sensor ASSY)

NOTE:
For the inspection procedure and precautions for wiring harnesses and connectors, refer to IN - 36.

(1) Disconnect the connector for the engine control computer.
(2) Disconnect the connector for accelerator pedal sensor ASSY.
(3) Measure the resistance between the terminals. (For terminal arrangement, refer to ES - 36.)

ES

Resistance (open circuit check)

Inspection terminals	Inspection conditions	Standard value
A35-23 (VPA) - A23-6 (VPA1)	Always	Less than 1 Ω
A35-29 (EPA) - A23-5 (GND1)	Always	Less than 1 Ω
A35-21 (VCPA) - A23-4 (VC1)	Always	Less than 1 Ω
A35-31 (VPA2) - A23-3 (VPA2)	Always	Less than 1 Ω
A35-30 (EPA2) - A23-2 (GND2)	Always	Less than 1 Ω
A35-22 (VCP2) - A23-1 (VC2)	Always	Less than 1 Ω

Resistance (short circuit check)

Inspection terminals	Inspection conditions	Standard value
A35-23 (VPA) and A23-6 (VPA1) - other terminals and chassis ground	Always	10 k Ωor more
A35-29 (EPA) and A23-5 (GND1) - other terminals and chassis ground	Always	10 k Ωor more
A35-21 (VCPA) and A23-4 (VC1) - other terminals and chassis ground	Always	10 k Ωor more
A35-31 (VPA2) and A23-3 (VPA2) - other terminals and chassis ground	Always	10 k Ωor more
A35-30 (EPA2) and A23-2 (GND2) - other terminals and chassis ground	Always	10 k Ωor more
A35-22 (VCP2) and A23-1 (VC2) - other terminals and chassis ground	Always	10 k Ωor more

NG → Repair or replacement of wiring harness or connector

OK

3	Engine control computer check (VC voltage)

NOTE:
For the inspection procedure and precautions for wiring harnesses and connectors, refer to IN - 36.

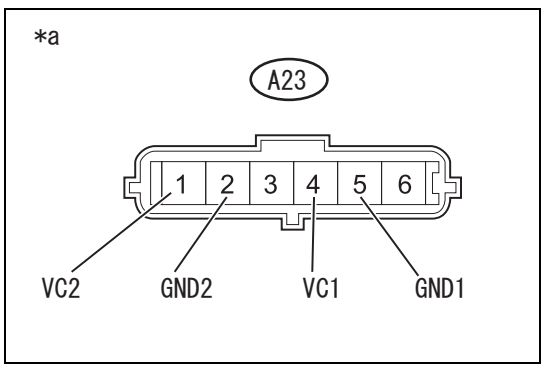

(1) Disconnect the connector for accelerator pedal sensor ASSY.
(2) Measure the voltage between the terminals.

Voltage

Inspection terminals	Inspection conditions	Standard value
A23-4 (VC1) - A23-5 (GND1)	IG ON	4.5 to 5.5 V
A23-1 (VC2) - A23-2 (GND2)	IG ON	4.5 to 5.5 V

Captions in illustration

*a	Front side of vehicle wiring harness connector (accelerator pedal sensor ASSY connector)

NG → Replacement of the engine control computer (Refer to ES - 670)

OK

4	Replacement of accelerator pedal sensor ASSY

(1) Replace the accelerator pedal sensor ASSY. (Refer to ES - 673)

Next

ES

5	Clear DTC

(1) Connect the SSM4 to the DLC3.
(2) Turn the ignition switch to ON.
(3) Turn on the SSM4.
(4) Follow the SSM4 on-screen instructions to clear the DTCs. (Refer to ES - 28)
(5) Turn the ignition switch to OFF, and wait for 30 seconds.

Next

6	Perform test drive for operation check

(1) Perform test drive. (Refer to "Test drive" under "Description of functions")
(2) Follow the SSM4 on-screen instructions to check the DTC. (Refer to ES - 28)

Result

Result	Go to
No DTC is output.	A
P2122, P2123, P2127, P2128, or P2138 is output.	B

B → Replacement of the engine control computer (Refer to ES - 670)

A

Complete

DTC	P2195	O2 Sensor Signal Biased/Stuck Lean (Bank 1 Sensor 1)
DTC	P2196	O2 Sensor Signal Biased/Stuck Rich (Bank 1 Sensor 1)

Circuit description

NOTE:

- The oxygen sensor is displayed in the DTCs, but these DTCs are related to the air/fuel ratio sensor.
- Sensor 1 means the sensor that is installed on the upstream (close to the engine) of the catalyst.

The air/fuel ratio sensor creates a voltage that corresponds to the actual air/fuel ratio.* The sensor voltage is used to provide the ECM with feedback for controlling the air/fuel ratio. The ECM determines the deviation from the stoichiometric air/fuel ratio level, and adjusts the fuel injection time. If there is a malfunction in the air/fuel ratio sensor, the ECM can no longer accurately control the air/fuel ratio.

The air/fuel ratio sensor is a planar type, and is one unit with the heater that heats the solid electrolyte (Zirconia material). This heater is controlled by the ECM. When the amount of air intake is low (the temperature of the exhaust gas is low), an electricity

current flows to the heater, and the sensor is warmed up. This aids in accurately detecting the concentration of oxygen. Also, the sensor and heater part has become smaller than previous versions. The heat created by the heater is transferred to the solid electrolyte through alumina, and this aids in the sensor's operation.
The three-way catalytic converter is used to increase the purification rate of carbon monoxide (CO), hydrocarbon (HC), and nitrogen oxide (NOx), which are substances contained in the exhaust gas. To most efficiently use the three-way catalytic converter, it is necessary to precisely control the air/fuel ratio so that it is always near stoichiometric levels.
*: Values change inside the ECM. Because the air/fuel ratio sensor is a current output part, this electrical current is converted to voltage in the ECM. Measurements of the air/fuel sensor or ECM connectors display a certain voltage.

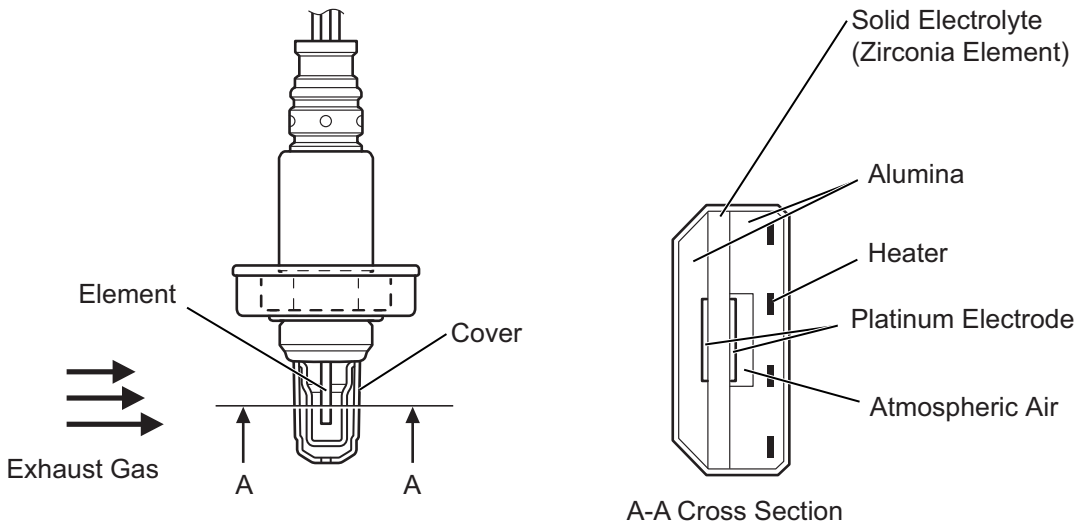

0

DTC No.	DTC detection conditions	Faulty part
P2195	When the excess air ratio (lambda) continues to be less than 0.85 for 10 seconds during air/fuel ratio feedback control (2 trips detection logic)	•Open/short circuits in the air/fuel ratio sensor •Air / fuel ratio sensor •Intake system •Fuel pressure •Fuel injector ASSY •ECM
P2196	When the excess air ratio (lambda) continues to exceed 1.15 for 10 seconds during air/fuel ratio feedback control (2 trips detection logic)	

NOTE:
- If these DTCs are recorded, using the SSM4 menu, check the air/fuel ratio sensor voltage output.
- The short-term fuel trim value can also be read with the SSM4.
- The ECM adjusts the voltage at the A1A+ and the A1A- terminals in the ECM to a certain level. Therefore, the voltage output of the air/fuel ratio sensor cannot be checked without using the SSM4.
- If a malfunction is detected in the air/fuel ratio sensor, the ECM records a DTC.

MONITOR DESCRIPTION
The ECM calculates the lambda (rate of excess air) based on the output voltage of the air/fuel ratio sensor. If the lambda exceeds the threshold for 10 seconds or more, the ECM determines that the air/fuel ratio sensor is stuck, and records a DTC.
Monitor strategy

Related DTCs	P2195: Primary oxygen sensor - Output voltage out of range P2196: Primary oxygen sensor - Output voltage out of range
Required Sensors/Components (Main)	Air / fuel ratio sensor
Required Sensors/Components (Related)	Oxygen sensor

Frequency of Operation	Continuous
Duration	10 seconds
MIL Operation	2 operation cycle
Sequence of Operation	None

TYPICAL ENABLING CONDITIONS

Overlap prohibited DTC	P0030 (air/fuel ratio sensor heater) P0037, P0038 (oxygen sensor - heater) P0068, P0107, P0108 (Vacuum (MAP) sensor) P0101, P0102, P0103 (intake air flow (MAF) meter) P0111, P0112, P0113 (Intake Air Temperature (IAT) sensor) P0117, P0118 (engine coolant temperature (ECT) sensor) P0122, P0123, P0222, P0223 (Throttle position sensor) P0137, P0138 (oxygen sensor - lack of continuity in circuit) P0171, P0172 (fuel system feedback control) P0300, P0301, P0302, P0303, P0304 (misfire) P0458, P0459 (Solenoid bulb for the purge control) P0500 (Vehicle Speed Sensor (VSS)) P0604, P0605 (ECM ROM) P1160 (throttle return spring) P2101, P2102 (Throttle actuator control motor) P2109 (Throttle position sensor minimum stop) P2119 (Throttle actuator control) P2122, P2123, P2127, P2128 (Accelerator Pedal Position Sensor (APPS) circuit) P2135 (Throttle position sensor (TPS) degree of correlation) P2138 (Accelerator pedal position sensor (APPS) degree of correlation)
Atmospheric pressure	75.06 kPa (abs) {563.09 mmHg (abs), 22.169 inHg, 10.884 psi} or more
Battery Voltage	10.9V or more
F/B operation condition	Closed loop
Intake amount per second	6 g/s or more
Oxygen sensor element estimated temperature	500°C (932°F) or more

TYPICAL MALFUNCTION THRESHOLDS

P2195

Lambda display	More than 1.15
Secondary oxygen sensor output voltage	More than 0.7 V

P2196

Lambda display	Less than 0.85
Secondary oxygen sensor output voltage	Less than 0.2V

Monitoring result

Refer to [Monitor Status Check] (Refer to ES - 24)

Circuit figure

For a circuit figure, refer to ES - 131.

Description of functions

Test drive

Perform test drive to check if the DTC recurs.

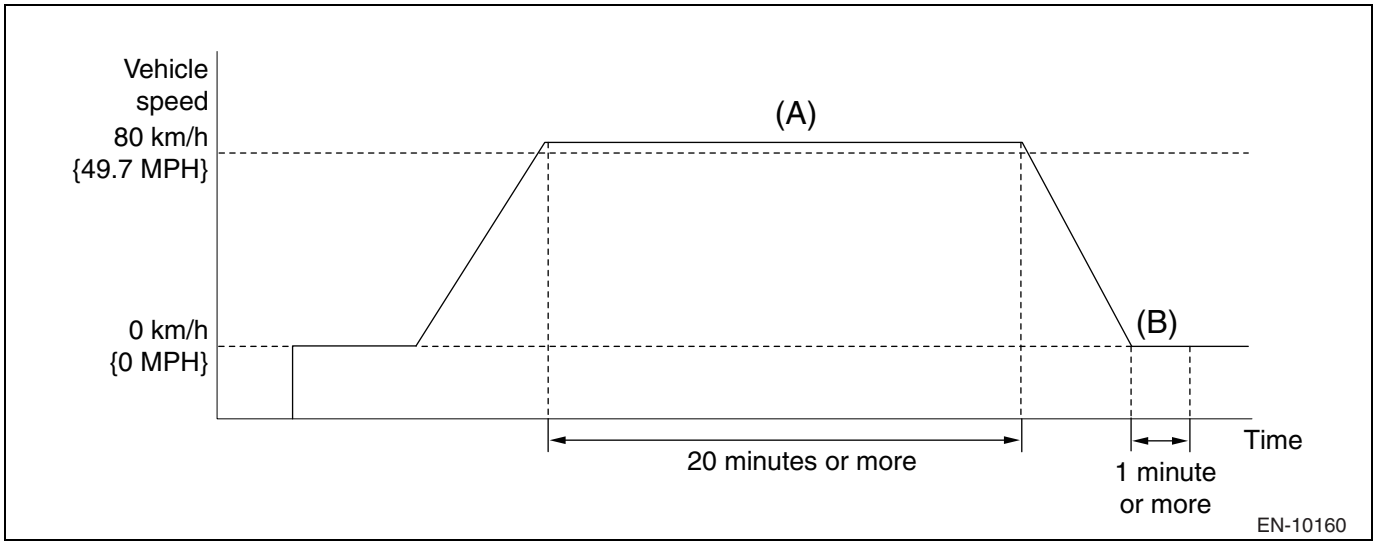

1. Connect the SSM4 to the DLC3.
2. Turn the ignition switch to ON.
3. Turn on the SSM4.
4. Follow the SSM4 on-screen instructions to clear the DTCs. (Refer to ES - 28)
5. Turn the ignition switch to OFF, and wait for 30 seconds.
6. Turn the ignition switch to ON.
7. Turn on the SSM4.
8. Start the engine and let it warm up until the engine coolant temperature stabilizes. (at 75°C {167°F} or more).
9. Perform driving test as follows.
   WARNING:
   When performing this driving test, always observe the applicable traffic laws such as the speed limit.
   (a) Drive at 80 km/h {49.7 MPH} or more for 20 minutes or more. (A)
   (b) Stop the vehicle.
   (c) Idle the engine for 1 minute or more. (B)
10. Follow the SSM4 on-screen instructions to check the DTC. (Refer to ES - 28)

Inspection steps

CAUTION:

Before performing troubleshooting, check the fuse for this circuit.

NOTE:

- Read the freeze frame data using the SSM4. A part of the engine running conditions under which the engine trouble occurred is recorded in the freeze frame data, which is useful for troubleshooting.
- When air/fuel ratio becomes in rich status, the air/fuel ratio sensor voltage may drop. Check the conditions that can cause the engine to be in rich status.
- When air/fuel ratio becomes in lean status, the air/fuel ratio sensor voltage may rise. Check the conditions that can cause the engine to be in lean status.

1	Read DTC

(1) Connect the SSM4 to the DLC3.
(2) Turn the ignition switch to ON.
(3) Turn on the SSM4.
(4) Follow the SSM4 on-screen instructions to check the DTC. (Refer to ES - 12)

Result

Result	Go to
Code P2195 or P2196 is output.	A
P2195 or P2196, and other DTCs are output.	B

NOTE:
If DTCs that are related to the air/fuel ratio sensor (DTCs for the air/fuel ratio sensor heater or the air/fuel ratio sensor admittance) are displayed, troubleshoot them first.

B → To corresponding DTC chart (refer to ES - 12)

A

ES

2	Checking the out-of-gas history

(1) Has the engine ever stopped because it ran out of gas?

No → Go to Step 4.

Yes

3	DTC recheck

(1) Connect the SSM4 to the DLC3.
(2) Turn the ignition switch to ON.
(3) Turn on the SSM4.
(4) Follow the SSM4 on-screen instructions to clear the DTCs. (Refer to ES - 28)
(5) Turn the ignition switch to OFF, and wait for 30 seconds.
(6) Turn the ignition switch to ON.
(7) Turn on the SSM4.
(8) Perform test drive. (Refer to "Test drive" under "Description of functions")
(9) Follow the SSM4 on-screen instructions to check the DTC. (Refer to ES - 28)

Result

Result	Go to
A DTC is not displayed.	A
DTC P2195 or P2196 is displayed	B

B → Go to Step 4.

A

DTC for running out of gas

4	Reading of SSM4 data ([A/F Sensor Current (Bank 1 Sensor 1)])

(1) Connect the SSM4 to the DLC3.
(2) Turn the ignition switch to ON.
(3) Turn on the SSM4.
(4) Follow the SSM4 on-screen instructions to clear the DTCs. (Refer to ES - 28)
(5) Perform test drive. (Refer to "Test drive" under "Description of functions")
(6) Select the following menu items using the SSM4. : [Each System] / [Engine Control System] / [Data monitor] / [Oxygen sensor(Comp)]

(7) Check that the status for [Oxygen sensor(Comp)] is "YES".
If this status is [Incomplete], drive the vehicle again following the driving pattern.
(8) Select the following menu items using the SSM4. : [Each System] / [Engine Control System] / [Data monitor] / [A/F Sensor #11]
(9) Inspect the test value for the air/fuel ratio sensor output current during a fuel cut.

Result

Result	Go to
Within normal range (0.7 mA or more, less than 2.2 mA)	A
Outside normal range (less than 0.7 mA, 2.2 mA or more)	B

B → Go to Step 16.

A

5	Reading of SSM4 data ([A/F Sensor Output Signal (Bank 1 Sensor 1)])

(1) Connect the SSM4 to the DLC3.
(2) Start the engine.
(3) Turn on the SSM4.
(4) Run the engine at 2500 RPM for approximately 90 seconds to warm up the air/fuel ratio sensor.
(5) Select the following menu items using the SSM4. : [Each System] / [Engine Control System] / [Work Support] / [Active Test] / [Cylinder Fuel Rate]
(6) With the engine idling, run the [Cylinder Fuel Rate].
(7) Inspect [A/F Sensor #11] and [Oxygen sensor #12] of the data display when running [Active Test].

NOTE:
- Fluctuate the fuel injection amount in a range of -12 % to +12 %. The fuel injection amount can be changed in steps.
- There is a delay of a few seconds in the air/fuel ratio sensor voltage output, and there is a maximum delay of approx. 20 seconds in the oxygen sensor voltage output.
- If the sensor output voltage does not fluctuate when running [Active Test] (almost no response), there may be a malfunction in the sensor.

Item	Fuel injection volume	Status	Output voltage of air/fuel ratio sensor and oxygen sensor
[A/F Sensor #11]	+12%	Rich	Less than 2.0V
	-12%	Lean	2.4V or more
[Oxygen sensor #12]	+12%	Rich	0.55 V or more
	-12%	Lean	Less than 0.4V

Result

AFS Voltage B1S1	Oxygen sensor voltage B1S2	Status of the air/fuel ratio and status of the air/fuel ratio sensor	Go to
Lean	Lean	Actual air/fuel ratio is lean	A
Rich	Rich	Actual air/fuel ratio is rich	A
Lean	Lean / rich	Malfunction in the air/fuel ratio sensor	B
Rich	Lean / rich	Malfunction in the air/fuel ratio sensor	B
Lean / rich	Lean / rich	Normal	B

- Lean: When [Active Test] is performed, the output voltage of the air/fuel ratio sensor remains at 2.4 V or more, and the output voltage of the oxygen sensor remains less than 0.4 V.
- Rich: When [Active Test] is performed, the output voltage of the air/fuel ratio sensor remains at 2.0 V or more, and the output voltage of the oxygen sensor remains less than 0.55 V.
- Lean / rich: When [Active Test] is performed, the output voltages of the air/fuel ratio sensor and oxygen sensor are normal.
- For details of [A/F Sensor #11] and [Oxygen sensor #12] data display items, check [Data monitor] / [Active Test]. (Refer to ES - 43)

ES

B → Go to Step 16.

A

6	Intake system inspection

(1) Inspect the intake system. (Refer toIE - 4)

NG → Repair or replacement of intake system

OK

7	Exhaust gas leakage check

(1) Make sure that exhaust gas is not leaking from connections of exhaust pipes and installation areas of sensors.

NG → Repair of exhaust gas leakage

OK

8	Fuel pressure inspection (low-pressure side)

(1) Perform the fuel pressure inspection (low-pressure side). (Refer to FU - 9)

NG → Go to Step 18.

OK

9	Unit inspection for the fuel injector ASSY (port injection side)

(1) Perform a unit inspection on the fuel injector ASSY (port injection side). (Refer to FU - 29)

NG → Replacement of the fuel injector ASSY (port injection side) (Refer to FU - 21)

OK

10	Reading of SSM4 data (fuel pressure)

(1) Connect the SSM4 to the DLC3.
(2) Turn the ignition switch to ON.

(3) Turn on the SSM4.
(4) Select the following menu items using the SSM4. : [Each System] / [Engine Control System] / [Data monitor] / [Fuel Rail Pressure]
(5) Inspect the [Fuel Rail Pressure] displayed on the SSM4.

Standard value

Item	Inspection conditions	Standard value
[Fuel Rail Pressure]	During idling	3000 to 5000 kPa {30.6 to 50.9 kgf/cm^2, 436 to 725 psi}

ES

NG → Check and replacement for the fuel system (high-pressure side)

OK

11 Unit inspection of the fuel injector ASSY (cylinder injection side)

(1) Perform a unit inspection on the fuel injector ASSY (cylinder injection side). (Refer to FU - 39)

NG → Replacement of the fuel injector ASSY (direct injection side) (Refer to FU - 31)

OK

12 Replacement of the air/fuel ratio sensor

(1) Replace the air/fuel ratio sensor. (Refer to ES - 707)

Next

13 DTC recheck

(1) Connect the SSM4 to the DLC3.
(2) Turn the ignition switch to ON.
(3) Turn on the SSM4.
(4) Follow the SSM4 on-screen instructions to clear the DTCs. (Refer to ES - 28)
(5) Turn the ignition switch to OFF, and wait for 30 seconds.
(6) Turn the ignition switch to ON.
(7) Turn on the SSM4.
(8) Perform test drive. (Refer to "Test drive" under "Description of functions")
(9) Follow the SSM4 on-screen instructions to check the DTC. (Refer to ES - 28)

Result

Result	Go to
P2195 or P2196 is output.	A
No DTC is output	B

B → Complete

A

14	Replacement of engine control computer

(1) Replace the engine control computer. (Refer to ES - 670)

Next

ES

15	Perform test drive for operation check

(1) Connect the SSM4 to the DLC3.
(2) Turn the ignition switch to ON.
(3) Turn on the SSM4.
(4) Follow the SSM4 on-screen instructions to clear the DTCs. (Refer to ES - 28)
(5) Turn the ignition switch to OFF, and wait for 30 seconds.
(6) Turn the ignition switch to ON.
(7) Turn on the SSM4.
(8) Perform test drive. (Refer to "Test drive" under "Description of functions")
(9) Follow the SSM4 on-screen instructions to check the DTC. (Refer to ES - 28)
Criteria: No DTC is output

Next

Complete

16	Replacement of the air/fuel ratio sensor

(1) Replace the air/fuel ratio sensor. (Refer to ES - 707)

Next

17	DTC recheck

(1) Connect the SSM4 to the DLC3.
(2) Turn the ignition switch to ON.
(3) Turn on the SSM4.
(4) Follow the SSM4 on-screen instructions to clear the DTCs. (Refer to ES - 28)
(5) Turn the ignition switch to OFF, and wait for 30 seconds.
(6) Turn the ignition switch to ON.
(7) Turn on the SSM4.
(8) Perform test drive. (Refer to "Test drive" under "Description of functions")
(9) Follow the SSM4 on-screen instructions to check the DTC. (Refer to ES - 28)

Result

Result	Go to
No DTC is output	A

Result	Go to
P2195 or P2196 is output.	B

B → Replacement of the engine control computer (Refer to ES - 670)

A

Complete

18	Fuel line inspection

(1) Inspect for leaks or damage in the fuel line.

NG → Repair or replacement of the fuel line

OK

Replacement of the fuel pump (low-pressure side) (Refer to FU - 47)

DTC	P2270	O2 Sensor Signal Biased/Stuck Lean (Bank 1 Sensor 2)

Circuit description

The three-way catalytic converter is used to efficiently purify carbon monoxide (CO), hydrocarbon (HC), and nitrogen oxide (NOx) contained in the exhaust gas. The maximum performance of this three-way catalyst is reached when it functions at near stoichiometric air-fuel ratio. Therefore, unless the engine is precisely controlled to produce near this air fuel ratio, CO, HC, and NOx are not efficiently purified. Oxygen sensors are provided for the purpose of this control. When an oxygen sensor detects an oxygen level within the exhaust gas produced from proper combustion near the stoichiometric air-fuel ratio, its output voltage changes quickly. This characteristic is used to send a signal to the engine control computer for an accurate air/fuel control.

Under a leaner air/fuel ratio, oxygen level within the exhaust gas increases. The oxygen sensor sends this information (lean air/fuel ratio state) to the engine control computer. (Works with a small electric power: less than 0.45 V)

Under a richer air/fuel ratio, oxygen level within the exhaust gas decreases. The oxygen sensor sends this information (rich air/fuel ratio state) to the engine control computer. (Works with a large electric power: more than 0.45 V)

A zirconium element is used for the sensor element. The zirconium element is made of platinum plated zirconium, containing integrated heating component. The inside surface of the zirconium element is exposed to the atmospheric air, and the outside surface is exposed to the exhaust gas. When there is a significant difference in oxygen level between the atmospheric air and the exhaust gas, the sensor outputs a small amount of voltage. Efficiency of the oxygen sensor increases significantly when heated. When exhaust gas temperature is low, the oxygen sensor cannot generate a useful voltage signal without supplemental heating. This is the reason why the oxygen sensor is equipped with a heater that heats up its zirconium element. The engine control computer uses the duty cycle approach to control the supplemental heating, adjusting the average electric current supplied to the zirconium element.

Oxygen sensor:

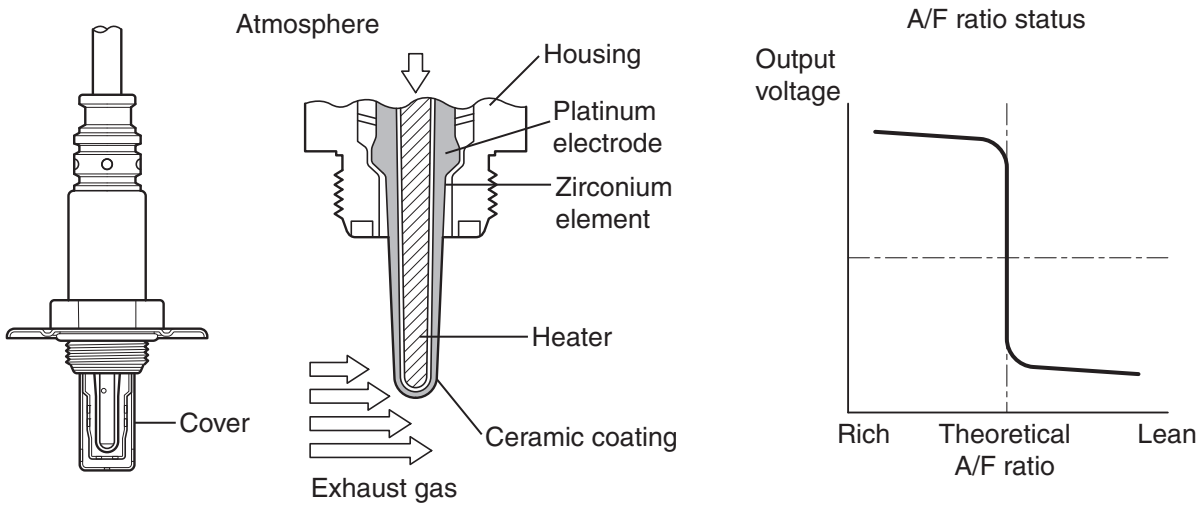

DTC No.	DTC detection condition	Suspected parts
P2270	Oxygen sensor voltage is 0.55V or less for 20 seconds or more	• Open or short condition in oxygen sensor circuit • Oxygen sensor • ECM

Monitor strategy

Related DTCs	None
Required Sensors/Components (Main)	Oxygen sensor
Required Sensors/Components (Related)	-
Frequency of Operation	1 time
Duration	15 seconds
MIL Operation	2 operation cycle
Sequence of Operation	None

ENABLING CONDITIONS

Overlap prohibited DTC	None
Battery voltage	10.9V or more
F/B operation condition	In operation
Intake amount per second	10 g/sec or more
Oxygen sensor element estimated temperature	500°C (932°F) or more
The executing condition with interrupt control	
Duration while rear oxygen sensor output voltage is less than 0.55 V	Less than 5 seconds
Air fuel ratio subtracted from the target air fuel ratio	Value of map

Map

Rear oxygen sensor output voltage (V)	0.00	0.15	0.20	0.40	0.60
Air fuel ratio subtracted from the target air fuel ratio (%)	8	8	4	4	4

TYPICAL MALFUNCTION THRESHOLDS

Oxygen sensor output voltage	Less than 0.55 V

Circuit figure

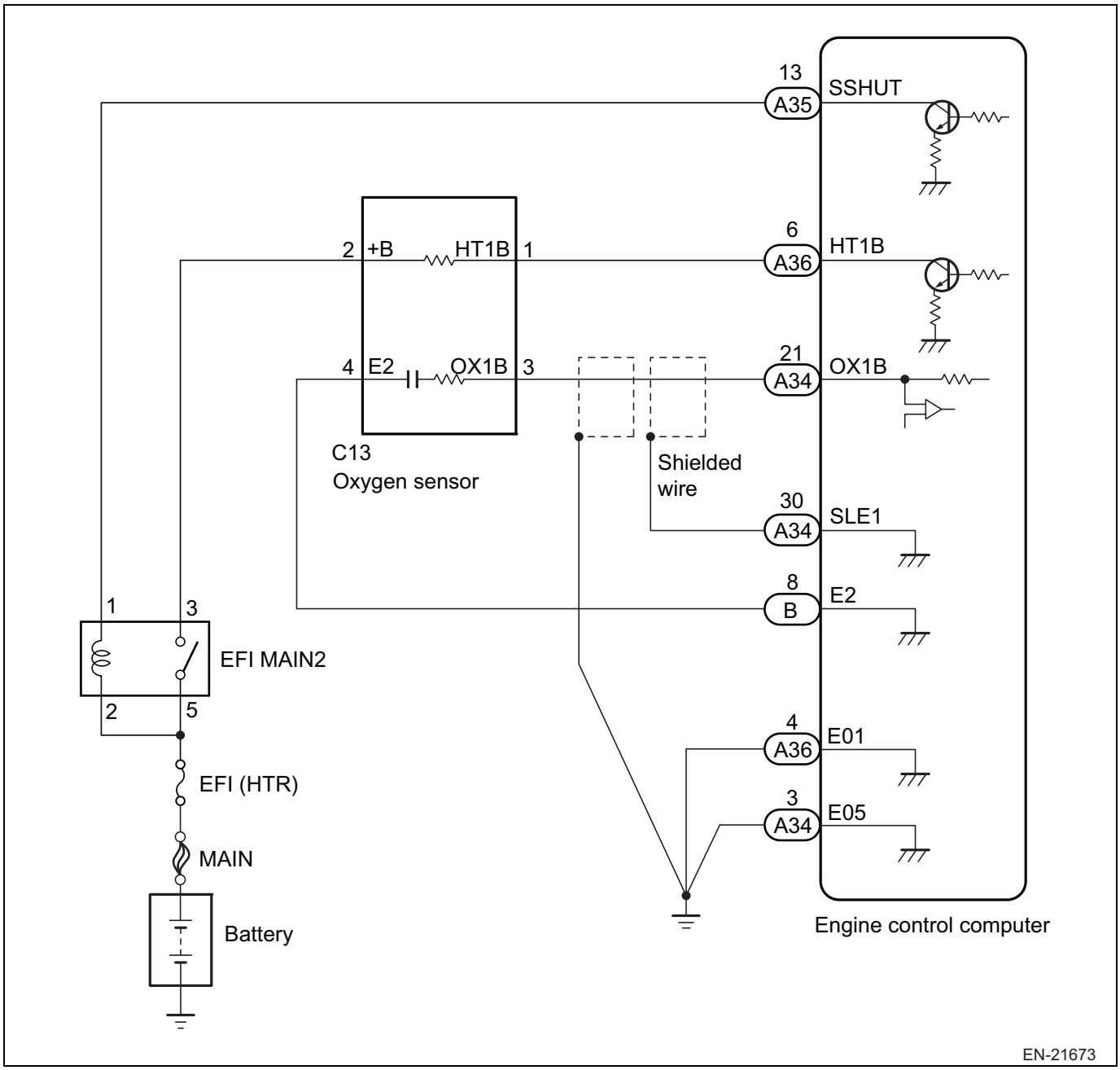

Description of functions

Test drive

Perform test drive to check if the DTC recurs.

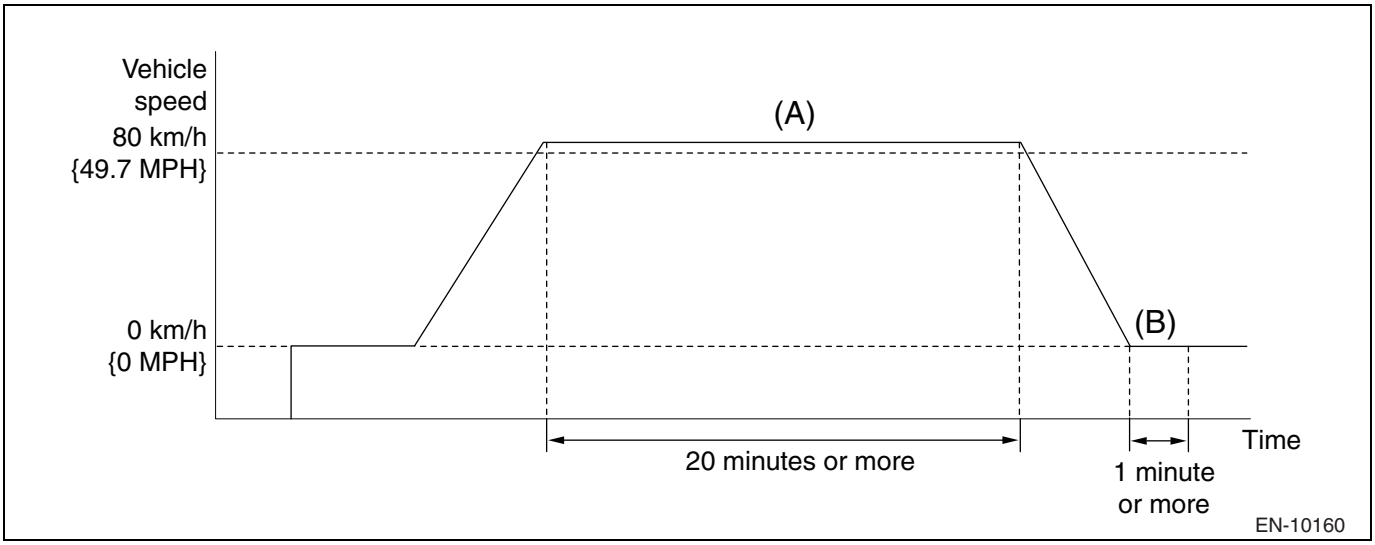

1. Connect the SSM4 to the DLC3.
2. Turn the ignition switch to ON.
3. Turn on the SSM4.
4. Follow the SSM4 on-screen instructions to clear the DTCs. (Refer to ES - 28)
5. Turn the ignition switch to OFF, and wait for 30 seconds.
6. Turn the ignition switch to ON.
7. Turn on the SSM4.
8. Start the engine and let it warm up until the engine coolant temperature stabilizes. (at 75°C {167°F} or more).
9. Perform driving test as follows.
   WARNING:
   When performing this driving test, always observe the applicable traffic laws such as the speed limit.
   (a) Drive at 80 km/h {49.7 MPH} or more for 20 minutes or more. (A)
   (b) Stop the vehicle.
   (c) Idle the engine for 1 minute or more. (B)
10. Follow the SSM4 on-screen instructions to check the DTC. (Refer to ES - 28)

Inspection steps

1	Check oxygen sensor connector and intermediate connector.

(1) Disconnect the oxygen sensor connector and the intermediate connector.
(2) Check the connectors for ingress of water.

NG → Completely remove water from the connectors.

OK

2	Check harness between engine control computer and oxygen sensor connector.

(1) Turn the ignition switch to OFF.
(2) Disconnect connectors from the engine control computer and the oxygen sensor.
(3) Measure the resistance between the engine control computer connector and the oxygen sensor connector.

Result

Result	Go to
Resistance between A36-6 —C13-1 and A34-21 —C13-3 is less than 1Ω	A

Result	Go to
Resistance between A36-6 —C13-1 and A34-21 —C13-3 is 1Ω or more	B

B → Repair or replace the wire harness or connector (air/fuel ratio sensor - engine control computer)

A

3	Check harness between engine control computer and oxygen sensor connector.

(1) Connect connectors to the engine control computer.
(2) Turn the ignition switch to ON.
(3) Measure the voltage between the oxygen sensor connector and the engine ground.

Result

Result	Go to
Voltage between C13-3 and engine ground is less than 0.15 V.	A
Voltage between C13-3 and engine ground is 0.15 V or more.	B

B → Repair short in the power supply of wire harness or connectors or replace them (air/fuel ratio sensor - engine control computer).

A

4	Check the exhaust system.

(1) Check the exhaust system for loose parts, improper installation, and damage (such as cracks and holes).

NG → Repair or replace the faulty parts.

OK

Replacement of oxygen sensor

DTC	P2271	O2 Sensor Signal Biased/Stuck Rich (Bank 1 Sensor 2)

Circuit description

The three-way catalytic converter is used to efficiently purify carbon monoxide (CO), hydrocarbon (HC), and nitrogen oxide (NOx) contained in the exhaust gas. The maximum performance of this three-way catalyst is reached when it functions at near stoichiometric air-fuel ratio. Therefore, unless the engine is precisely controlled to produce near this air fuel ratio, CO, HC, and NOx are not efficiently purified. Oxygen sensors are provided for the purpose of this control. When an oxygen sensor detects an oxygen level within the exhaust gas produced from proper combustion near the stoichiometric air-fuel ratio, its output voltage changes quickly. This characteristic is used to send a signal to the engine control computer for an accurate air/fuel control.

Under a leaner air/fuel ratio, oxygen level within the exhaust gas increases. The oxygen sensor sends this information (lean air/fuel ratio state) to the engine control computer. (Works with a small electric power: less than 0.45 V)

Under a richer air/fuel ratio, oxygen level within the exhaust gas decreases. The oxygen sensor sends this information (rich air/fuel ratio state) to the engine control computer. (Works with a large electric power: more than 0.45 V)

A zirconium element is used for the sensor element. The zirconium element is made of platinum plated zirconium, containing integrated heating component. The inside surface of the zirconium element is exposed to the atmospheric air, and the outside surface is exposed to the exhaust gas. When there is a significant difference in oxygen level between the atmospheric air and the

exhaust gas, the sensor outputs a small amount of voltage. Efficiency of the oxygen sensor increases significantly when heated. When exhaust gas temperature is low, the oxygen sensor cannot generate a useful voltage signal without supplemental heating. This is the reason why the oxygen sensor is equipped with a heater that heats up its zirconium element. The engine control computer uses the duty cycle approach to control the supplemental heating, adjusting the average electric current supplied to the zirconium element.

Oxygen sensor:

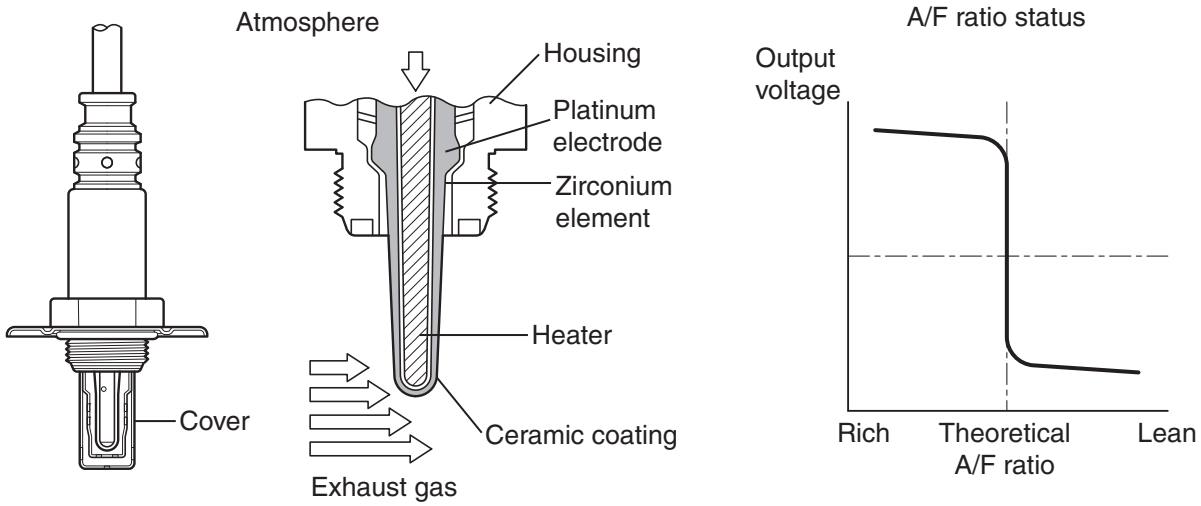

DTC No.	DTC detection condition	Suspected parts
P2271	Oxygen sensor voltage is 0.55V or less for 20 seconds or more	• Open or short condition in oxygen sensor circuit • Oxygen sensor • ECM

Monitor strategy

Related DTCs	None
Required Sensors/Components (Main)	Oxygen sensor
Required Sensors/Components (Related)	-
Frequency of Operation	1 time
Duration	0.5 seconds
MIL Operation	2 operation cycle
Sequence of Operation	None

ENABLING CONDITIONS

Overlap prohibited DTC	None
Battery voltage	10.9V or more
Time elapsed after fuel cutoff	5 seconds or more
Oxygen sensor element estimated temperature	500°C (842°F) or more

TYPICAL MALFUNCTION THRESHOLDS

Oxygen sensor output voltage	More than 0.15 V

Circuit figure

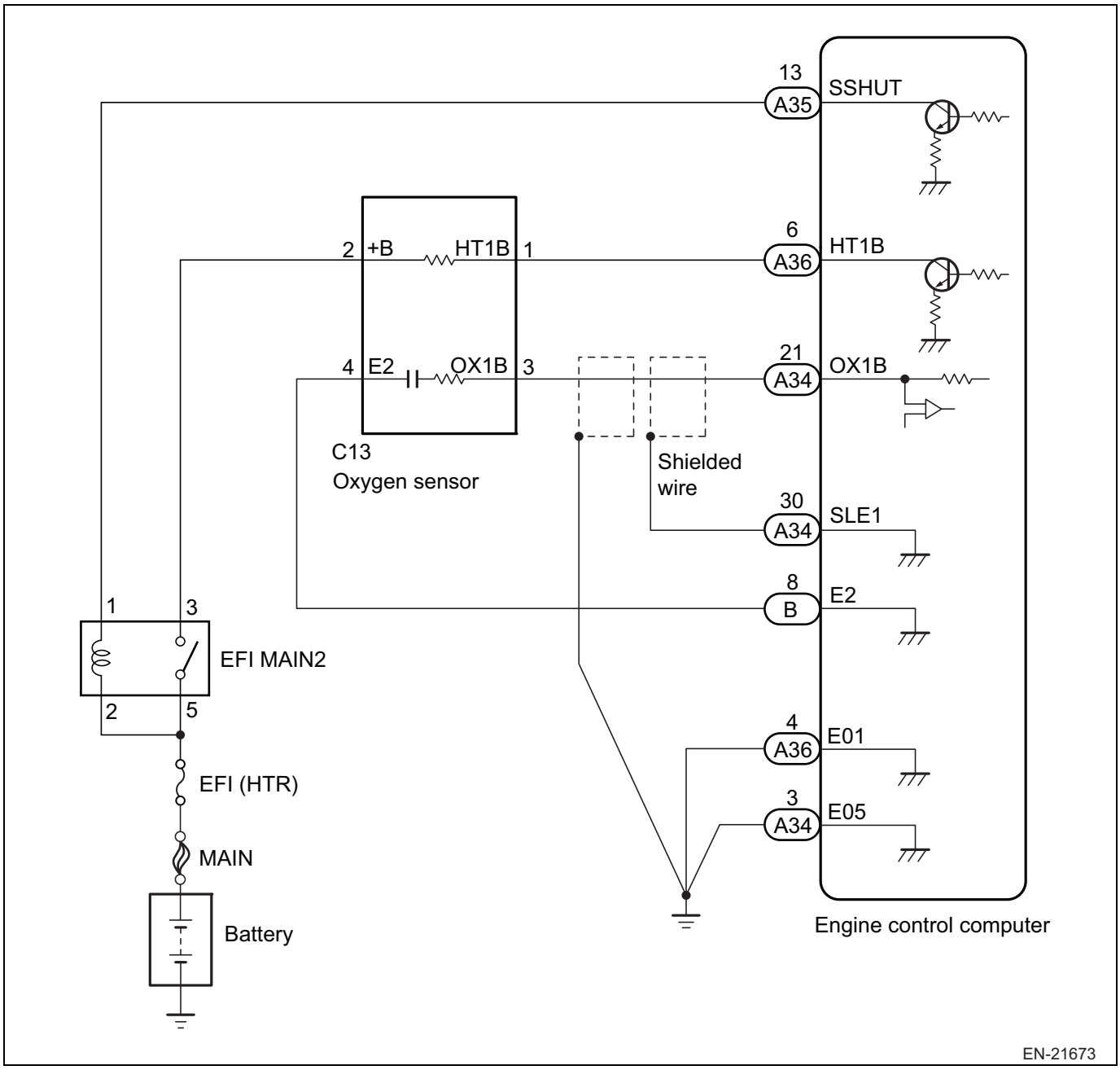

Description of functions

Test drive

Perform test drive to check if the DTC recurs.

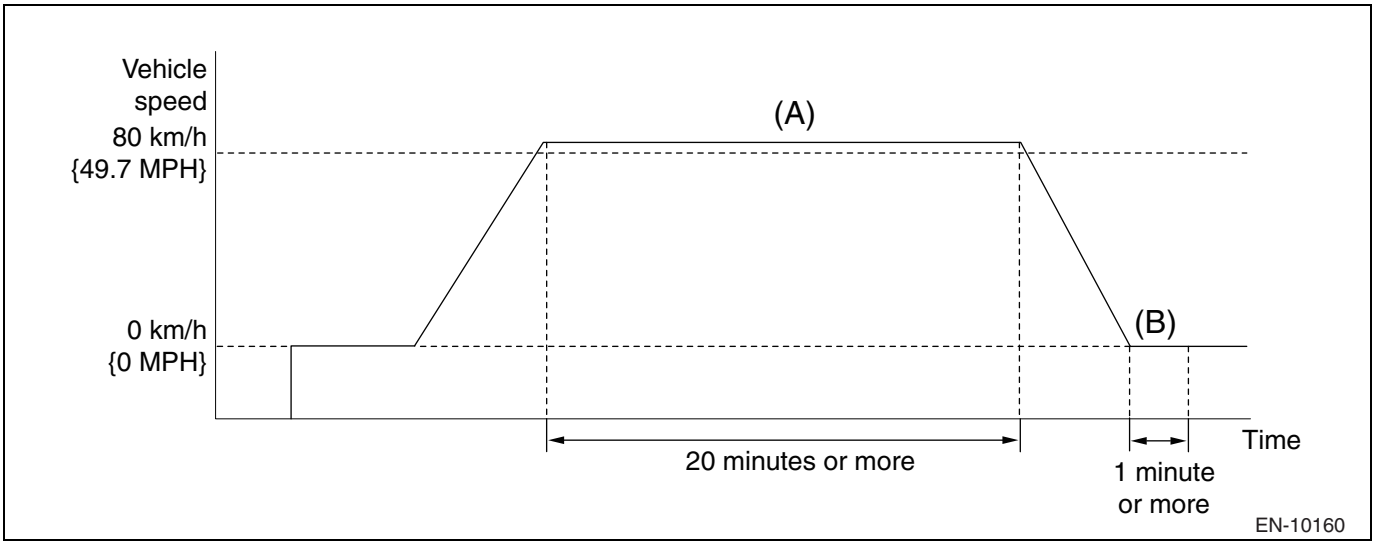

1. Connect the SSM4 to the DLC3.
2. Turn the ignition switch to ON.
3. Turn on the SSM4.
4. Follow the SSM4 on-screen instructions to clear the DTCs. (Refer to ES - 28)
5. Turn the ignition switch to OFF, and wait for 30 seconds.
6. Turn the ignition switch to ON.
7. Turn on the SSM4.
8. Start the engine and let it warm up until the engine coolant temperature stabilizes. (at 75°C {167°F} or more).
9. Perform driving test as follows.
   WARNING:
   When performing this driving test, always observe the applicable traffic laws such as the speed limit.
   (a) Drive at 80 km/h {49.7 MPH} or more for 20 minutes or more. (A)
   (b) Stop the vehicle.
   (c) Idle the engine for 1 minute or more. (B)
10. Follow the SSM4 on-screen instructions to check the DTC. (Refer to ES - 28)

Inspection steps

1	Check oxygen sensor connector and intermediate connector.

(1) Disconnect the oxygen sensor connector and the intermediate connector.
(2) Check the connectors for ingress of water.

NG → Completely remove water from the connectors.

OK

2	Check harness between engine control computer and oxygen sensor connector.

(1) Turn the ignition switch to OFF.
(2) Disconnect connectors from the engine control computer and the oxygen sensor.
(3) Measure the resistance between the engine control computer connector and the oxygen sensor connector.

Result

Result	Go to
Resistance between A36-6 —C13-1 and A34-21 —C13-3 is less than 1Ω	A

Result	Go to
Resistance between A36-6 —C13-1 and A34-21 —C13-3 is 1Ω or more	B

B → Repair or replace the wire harness or connector (air/fuel ratio sensor - engine control computer)

A

3	Check harness between engine control computer and oxygen sensor connector.

(1) Measure the resistance between the engine control computer connector and the engine ground.

Result

Result	Go to
Resistance between C13-3 and engine ground is less than 1 MΩ.	A
Resistance between C13-3 and engine ground is 1 MΩ or more.	B

B → Repair short in the power supply of wire harness or connectors or replace them (air/fuel ratio sensor - engine control computer).

A

4	Check the exhaust system.

(1) Check the exhaust system for loose parts, improper installation, and damage (such as cracks and holes).

NG → Repair or replace the faulty parts.

OK

Replacement of oxygen sensor

DTC	P2401	Evaporative Emission Leak Detection Pump Stuck OFF
DTC	P2402	Evaporative Emission Leak Detection Pump Stuck ON
DTC	P2419	Evaporate Emission System Switching Valve Control Circuit Low
DTC	P2420	Evaporate Emission System Switching Valve Control Circuit High

Circuit description

Refer to "EVAP (EVAP emission) system" for details. (Refer to ES - 595)

DTC No.	Monitoring items	Error detection condition	Suspected parts	Detection timing	Detection logic
P2401	Leak detection pump stuck OFF	If any one of the following condition is met during EVAP monitoring and when P2401, P2402, P2419, or P2420 is stored. •Leak detection pump stuck OFF failure •Leak detection pump stuck ON failure •Vent valve ON (close) failure •Vent valve OFF (open) failure	•Canister pump module •Connector/wiring harness (canister pump module - ECM) •ECM	When EVAP monitoring is in progress	1 trip
P2402	Leak detection pump stuck ON				
P2419	Vent valve circuit LOW				
P2420	Vent valve circuit HIGH				

ES

MONITOR DESCRIPTION

While monitoring the EVAP system, the ECM monitors the status of the leak detection pump and vent valve integrated into the canister pump module.

When the ECM detects any malfunction in operation status of the leak detection pump and vent valve, the ECM illuminates the MIL and stores the DTCs.

Monitor strategy

Related DTCs	P2401: Evaporative emission system leak detection pump circuit continuity P2402: Evaporative emission system leak detection pump circuit continuity P2419: Evaporative emission system switching valve circuit continuity P2420: Evaporative emission system switching valve circuit continuity
Frequency of Operation	Once per driving cycle: P2401, P2402 Continuous: P2419, P2420
Duration	2.5 seconds
MIL Operation	Immediately after
Sequence of Operation	None

TYPICAL ENABLING CONDITIONS

Overlap prohibited DTC	None
Battery Voltage	10.9V or more
When one of the following conditions is met:	A or B
A. IG	ON
B. Startup by soak timer	Establish

P2401

Command signal from the ECM	None

P2402

Command signal from the ECM	ON

P2419

Command signal from the ECM	None

P2420

Command signal from the ECM	ON

TYPICAL MALFUNCTION THRESHOLDS

P2401

Drain voltage of FET for leak detection pump	Battery voltage ×0.34 V or less

P2402

FET current for leak detection pump	12A or more

P2419

FET voltage for leak detection pump	Battery voltage ×0.34 V or less

P2420

FET current for vent valve	12A or more

ES

Monitoring result

Refer to [Monitor Status Check] (Refer to ES - 24)

Circuit figure

For a circuit figure, refer to ES - 346.

Description of functions

Test drive (P2401, P2419)

Perform test drive to check if the DTC recurs.

1. Connect the SSM4 to the DLC3.
2. Turn the ignition switch to ON.
3. Turn on the SSM4.
4. Follow the SSM4 on-screen instructions to clear the DTCs. (Refer to ES - 28)
5. Turn the ignition switch to OFF, and wait for 30 seconds.
6. Turn the ignition switch to ON.
7. Turn on the SSM4.
8. Start the engine.
   NOTE:
   If the engine cannot be started, crank the engine for 10 seconds or more.
9. Idle the engine for 20 seconds or more.
10. Follow the SSM4 on-screen instructions to check the DTC. (Refer to ES - 28)

Test drive (P2402, P2420)

Perform test drive to check if the DTC recurs.

1. Connect the SSM4 to the DLC3.
2. Turn the ignition switch to ON.
3. Turn on the SSM4.
4. Follow the SSM4 on-screen instructions to clear the DTCs. (Refer to ES - 28)
5. Turn the ignition switch to OFF, and wait for 30 seconds.
6. Turn the ignition switch to ON.
7. Turn on the SSM4.
8. Select the following menu items using the SSM4. : [OBD System] / [Each System] / [ECM Engine Control] / [On-Board System Test] / [Evaporative System Leak Test]
9. Click the [OK] button to start the evaporative system leak test.
   CAUTION:
   - When performing the evaporative system leak test continuously, pay attention to the battery condition. If the evaporative system leak test is repeatedly performed without starting the engine, the battery voltage will drop and may cause run-out of the battery.
   - Do not leave the vehicle for a prolonged period with the evaporative system leak test performed. This may cause an early deterioration of the battery or cause a battery discharge.

   NOTE:
   - When performing the evaporative system leak test continuously, drive the vehicle under the following conditions, and release the accumulated evaporative emission. If the evaporative system leak test is continuously performed with the engine stopped, a large amount of evaporative emission is accumulated into the canister, which may prevent correct diagnosis.
     – After warming-up

  - Drive at 48 km/h {30 MPH} or more for 10 minutes or more. (Driving time is acceptable for accumulation.)
- Observe the following items for operation to obtain correct diagnostic result.
  - Do not refuel the vehicle before performing the evaporative system leak test. Because a large amount of evaporative emission is generated in the fuel tank immediately after refueling the vehicle, the accuracy of the diagnosis may be reduced.
  - Do not shake the vehicle while the evaporative system leak test is being performed. Rocking the vehicle will increase the evaporative emission in the fuel tank, which may reduce the accuracy of the diagnosis.
  - During evaporative system leak test, do not perform any service operation including removal/installation of the parts and connectors. Otherwise, the service operation may affect the related parts, and the accuracy of the diagnosis can be reduced.

ES

10. [Conditions have been enabled to control this function. Turn the ignition switch off to terminate the test.] is displayed. Wait for 30 minutes without clicking the [OK] button.
    NOTE:
    - Click the [OK] button to return to [Evaporative System Leak Test] screen. However, the evaporative system leak test still continues.
    - The display of the SSM4 will not change both when the evaporative system leak test is successfully completed and when the test is canceled by turning IG to OFF.
    - When [Test conditions are not correct] screen is displayed, using the SSM4, check that the value of [Coolant Temp.] and the value of [Intake Air Temp.] are within the specification. When the values are within the specification, perform the evaporative system leak test.
11. When 30 minutes has passed after finishing step 9, click the [OK] button.
12. Return to [OBD Menu], select {Result of on-board monitor test}.
13. Check TID$C1 to $CA of MID$3C in [Result of on-board monitor test].

Result of on-board monitor test

Display	Details	Remarks
$0000 is stored in every Val.	The test condition fails to be met during evaporative system leak test, and the test has been cancelled.	Re-run the test after ensuring that the test conditions are met.
Any value is stored in every Val. and every Result shows OK.	The evaporative system leak test is completed successfully.	Use the SSM4 to read the temporary code with IG ON.
Any one of the results is NG	The evaporative system leak test is completed successfully but there is an error in the results.	Use the SSM4 to read the temporary code with IG ON.

14. When the evaporative system leak test is completed successfully, read the temporary code with IG ON. When any DTC is recorded, troubleshoot the appropriate DTC.
    NOTE:
    Turning IG to OFF will clear the temporary codes.

Inspection steps

CAUTION:

- Do not disassemble the canister pump module.
- Check fuses of the circuits related to this system before performing the following inspection steps.

1	Check canister pump module (power supply)

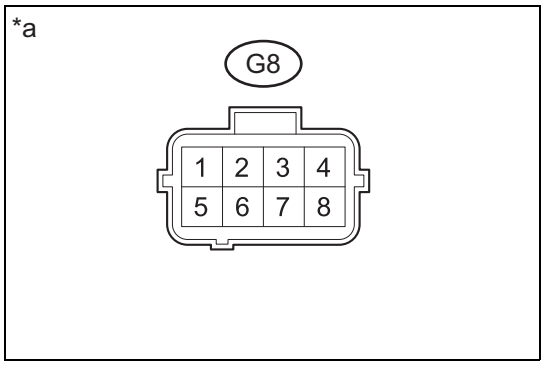

(1) Turn the ignition switch to OFF.
(2) Disconnect the canister pump module connector.
(3) Measure the voltage between the terminals.

Voltage

Inspection terminals	Inspection conditions (switching)	Standard value
G8-3 - chassis ground	IG ON	11 to 14V
G8-5 - chassis ground	IG ON	11 to 14V

Captions in illustration

*a	Connector not connected (Canister pump module)

NG → Go to Step 4.

OK

2	Check wiring harness and connector (canister pump module - ECM)

(1) Turn the ignition switch to OFF.
(2) Disconnect the canister pump module connector.
(3) Disconnect the ECM connector.
(4) Measure the resistance between the terminals. (Refer to ES - 36for the terminal arrangement)

Resistance (open circuit check)

Inspection terminals	Inspection conditions	Standard value
A35-8 (MPMP) - G8-4	Always	Less than 1 Ω
A35-1 (VPMP) - G8-1	Always	Less than 1 Ω

Resistance (short circuit check)

Inspection terminals	Inspection conditions	Standard value
A35-8 (MPMP) or G8-4 - chassis ground	Always	10 k Ωor more
A35-1 (VPMP) or G8-1 - chassis ground	Always	10 k Ωor more

NG → Repair or replacement of wiring harness or connector

Next

3	Unit inspection of canister pump module

(1) Perform unit inspection of canister pump module. (Refer to EC - 11)

NG → Replacement of canister pump module

OK

Inspection for problems that do not normally occur (Refer to ES - 28)

4	Relay unit inspection (EFI MAIN1 relay)

(1) Perform unit inspection of EFI MAIN1 relay. (Refer to ES - 713)

NG → Relay replacement (EFI MAIN1 relay)

OK

ES

5	Check wiring harness and connector (canister pump module - EFI MAIN1 relay)

(1) Turn the ignition switch to OFF.
(2) Remove the EFI MAIN1 relay from the engine compartment relay block ASSY.
(3) Measure the resistance between the terminals. (Refer to ES - 36for the terminal arrangement)

Resistance (open circuit check)

Inspection terminals	Inspection conditions	Standard value
G8-3 - EFI MAIN1 relay terminal 3	Always	Less than 1 Ω
G8-5 - EFI MAIN1 relay terminal 3	Always	Less than 1 Ω

Resistance (short circuit check)

Inspection terminals	Inspection conditions	Standard value
G8-3 or EFI MAIN1 relay terminal 3 - chassis ground	Always	10 k Ωor more
G8-5 or EFI MAIN1 relay terminal 3 - chassis ground	Always	10 k Ωor more

NG → Repair or replacement of wiring harness or connector

OK

Inspection of the ECM power supply system (Refer to ES - 642)

DTC	P2530	Ignition SW circuit

Circuit description

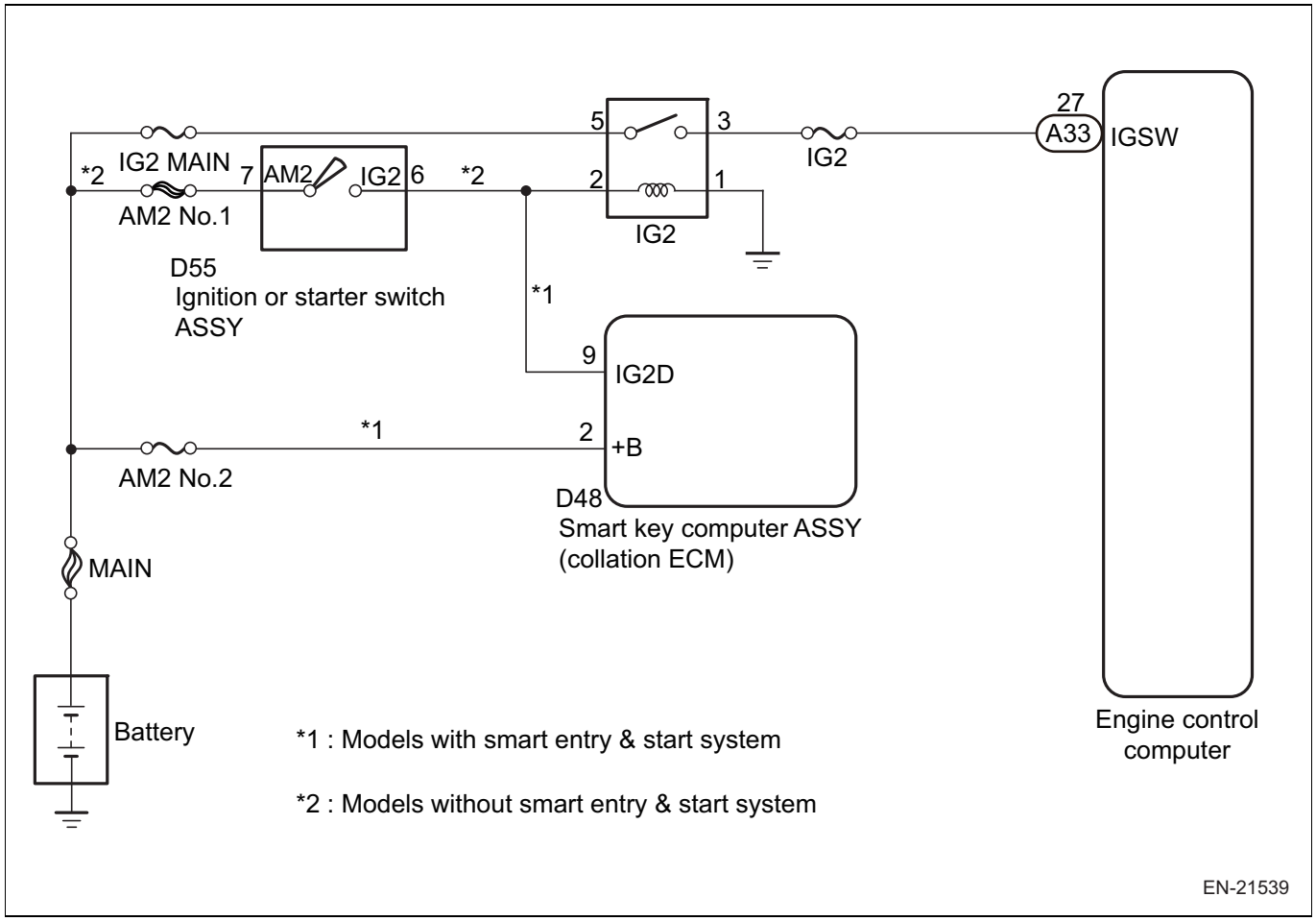

DTC No.	DTC detection conditions	Suspected parts
P2530	Ignition switch input circuit is instantaneously interrupted 5 times or more (1 trips detection logic)	• IG SW

MONITOR STRATEGY

Frequency of Operation	Continuous
Duration	5 seconds
MIL Operation	Immediately after
Sequence of Operation	None

ENABLING CONDITIONS

Battery voltage	10.9 V or more
Engine speed	550 r/min or more

TYPICAL MALFUNCTION THRESHOLDS

Count of temporarily discontinuous input of ignition switch	5 times or more

Description of functions

Test drive

Perform test drive to check if the DTC recurs.

1. Connect the SSM4 to the DLC3.
2. Turn the ignition switch to ON.
3. Turn on the SSM4.
4. Follow the SSM4 on-screen instructions to clear the DTCs. (Refer to ES - 28)
5. Turn the ignition switch to OFF, and wait for 30 seconds.
6. Turn the ignition switch to ON.
7. Turn on the SSM4.
8. Start the engine.
   NOTE:
   If the engine cannot be started, crank the engine for 10 seconds or more.
9. Idle the engine for 20 seconds or more.
10. Follow the SSM4 on-screen instructions to check the DTC. (Refer to ES - 28)

Inspection steps

1	Check ECM connector

(1) Check the connection of the ECM connector.

Result

Result	Go to
Not connected	A
Connected	B

B → Connect the connector properly.

A

2	Check ECM input voltage.

(1) Turn the ignition switch to ON.
(2) Measure the voltage between the ECM connector, chassis connector, and chassis ground, while wiggling the harness between the ECM connector and the ignition switch connector (for models without push start) or the harness between the ECM connector and IG relay 1 (for models with push start).

Inspection terminals	Inspection conditions	Standard value
A33-27 (IGSW) - chassis ground	IG ON	8 V or more

NG → Repair harness, connector, and switch.

OK

System is normal. The circuit returns to normal at this point even if a DTC is detected.

DTC	P2610	Soak timer IC error

Circuit description

The soak timer starts to operate after ignition switch has been turned to OFF. After a certain period of time has elapsed since IG SW OFF, the soak timer activates the ECM, and the inspection for malfunction is performed. This process can be executed only after the engine has stopped. The soak timer is integrated into the ECM.

DTC No.	DTC detection conditions	Faulty part
P2610	When any of the following conditions is met (2 trip detection logic): Timer diagnosis •When [(engine ECM counter - soak timer IC counter) / engine ECM counter] is 0.24 or more. Full count diagnosis •When the soak timer IC counter is not 1023. Timer diagnosis •When the setting time written in the soak timer IC is different from the value that was read in. Full count diagnosis during wake-up •When the engine ECM counter is 1.636 seconds or less and the soak timer IC counter is 1023. Wake-up diagnosis •Recorded number of wake-up count is smaller than that of the wake-up command.	ECM

ES

MONITOR DESCRIPTION

1. After the engine has started, the ECM monitors the synchronization status between the soak timer and CPU clock. If these elements are not synchronized with each other, the ECM judges this status to be abnormal, illuminates the MIL, and then stores the DTCs.
2. If the soak timer activates the ECM although not so long period has passed since ignition switch is turned to OFF, or if the soak timer does not activate the ECM although a great deal of time has passed since ignition switch is turned to OFF, the ECM judges that the malfunction occurs in the soak timer, illuminates the MIL, and stores the DTCs next time ignition switch is turned to ON.

Monitor strategy

Related DTCs	P2610: ECM engine off timer performance (soak timer IC)
Required Sensors/Components (Main)	ECM
Required Sensors/Components (Related)	-
Frequency of Operation	Once per driving cycle
Duration	0.128 seconds: Timer diagnosis, full count diagnosis and time diagnosis (Case 1) Immediately after: Time diagnosis (Case 2) and wake-up diagnosis
MIL Operation	2 operation cycle
Sequence of Operation	None

TYPICAL ENABLING CONDITIONS

All

Overlap prohibited DTC	None

Timer diagnosis

Ignition switch	OFF
Battery Voltage	10.9V or more
Elapsed time after starting the engine	10 min. to 17.05 hrs.

Full count diagnosis

Ignition switch	OFF
Battery Voltage	10.9V or more
ECM timer	4 seconds or more

Time diagnosis (Case 1)

Ignition switch	OFF
Battery Voltage	10.9V or more

Time diagnosis (Case 2)

Ignition switch	OFF
Battery Voltage	10.9V or more

Wake-up diagnosis

Ignition switch	ON
Leaving time	1 hour or longer

TYPICAL MALFUNCTION THRESHOLDS

Timer diagnosis

[(ECM counter)-(Soak timer IC counter)]/ECM counter	More than 0.24

Full count diagnosis

Soak timer IC counter	Not 1023 counts

Time diagnosis (Case 1)

Value commanded by ECM = Value received by soak timer IC	None

Time diagnosis (Case 2)

When one of the following conditions is met.	A or B
A. Soak timer IC counter with the ECM timer indicating the values less than 1.636 seconds	1023 counts
B. Soak timer IC counter with the ECM timer indicating the values of 2.456 seconds or more	Not 1023 counts

Wake-up diagnosis

Recorded number of wake-up count is smaller than that of the wake-up command.	Yes

Description of functions

Test drive

Perform test drive to check if the DTC recurs.

1. Connect the SSM4 to the DLC3.
2. Turn the ignition switch to ON.
3. Turn on the SSM4.
4. Follow the SSM4 on-screen instructions to clear the DTCs. (Refer to ES - 28)
5. Turn the ignition switch to OFF, and wait for 30 seconds.
6. Turn the ignition switch to ON.
7. Start the engine.
8. Idle the engine for 15 minutes or more.
9. Turn the ignition switch to OFF, and wait for 10 hours or more.
10. Turn the ignition switch to ON.
11. Start the engine.
12. Follow the SSM4 on-screen instructions to check the DTC. (Refer to ES - 28)

Inspection steps

NOTE:

- When malfunction is detected in the engine control computer, P2610 is stored. Performing the diagnostic procedure is not required. The ECM needs replacement.
- Read the freeze frame data using the SSM4. A part of the engine running conditions under which the engine trouble occurred is recorded in the freeze frame data, which is useful for troubleshooting.

1	Replacement of engine control computer

(1) Replace the engine control computer. (Refer to ES - 670)

Next

2	DTC recheck

(1) Connect the SSM4 to the DLC3.
(2) Turn the ignition switch to ON.
(3) Turn on the SSM4.
(4) Follow the SSM4 on-screen instructions to clear the DTCs. (Refer to ES - 28)
(5) Turn the ignition switch to OFF, and wait for 30 seconds.
(6) Turn the ignition switch to ON.
(7) Start the engine, and wait for 10 minutes or more.
(8) Turn the ignition switch to OFF, and wait for 10 hours.
(9) Turn the ignition switch to ON.
(10) Turn on the SSM4.
(11) Start the engine.
(12) Follow the SSM4 on-screen instructions to check the DTC. (Refer to ES - 28)
(13) If there are no pending DTCs, repair has been successfully completed.

Next

Complete

DTC	U0073	Control Module Communication Bus "A" Off
DTC	U0101	Lost Communication With TCM
DTC	U0122	Lost Communication With Vehicle Dynamics Control Module
DTC	U0155	Lost Communication With Instrument Panel Cluster (IPC) Control Module
DTC	U0402	Invalid Data Received From TCM
DTC	U0416	Invalid Data Received From Vehicle Dynamics Control Module
DTC	U0423	Invalid Data Received From Instrument Panel Cluster Control Module

ES

Circuit description

The engine control computer, the transmission control computer, the skid control computer (brake actuator ASSY), and the combination meter ASSY send and receive data via CAN communication line. When a communication error occurs between each computer, the engine control computer outputs the DTCs.

DTC No.	DTC detection conditions	Faulty part
U0073	Bus OFF status continues for 0.436 seconds or more. (1 trips detection logic)	•Wiring harness (CANL - CANH circuit) •ECM
U0101	Communication between ECM and TCM becomes impossible for 0.5 seconds or more. (1 trips detection logic)	•Wiring harness (CANL - CANH circuit) •ECM •TCM
U0122	Communication between ECM and skid control ECM becomes impossible for 0.5 seconds or more. (1 trips detection logic)	•Wiring harness (CANL - CANH circuit) •ECM •Brake actuator ASSY
U0155	Communication between ECM and combination meter ASSY becomes impossible for 0.5 seconds or more. (1 trips detection logic)	•Wiring harness (CANL - CANH circuit) •ECM •Combination meter ASSY
U0402	Invalid data has been received from TCM for 2 seconds or more. (1 trips detection logic)	•Wiring harness (CANL - CANH circuit) •ECM •TCM
U0416	Invalid data has been received from skid control ECM for 2 seconds or more. (1 trips detection logic)	•Wiring harness (CANL - CANH circuit) •ECM •Brake actuator ASSY
U0423	Invalid data has been received from combination meter ASSY for 2 seconds or more. (1 trips detection logic)	•Wiring harness (CANL - CANH circuit) •ECM •Combination meter ASSY

MONITOR DESCRIPTION

The ECM, the TCM, the skid control ECM, and the combination meter ASSY send and receive data via CAN communication line. If any malfunction occurs in this communication, the ECM stores DTC.

Monitor strategy

Related DTCs	U0073: Control Module Communication Bus Off U0101: Lost Communication with TCM U0122: Lost Communication with Vehicle Stability Control Module U0155: Lost Communication with Instrument Panel Cluster Control Module (Combination Meter) U0402: Invalid Data Received from TCM U0416: Invalid Data Received from Vehicle Stability Control Module U0423: Invalid Data Received from Instrument Panel Cluster Control Module
Required Sensors/Components (Main)	ECM
Required Sensors/Components (Related)	TCM, skid control ECM, combination meter ASSY
Frequency of Operation	Continuous
Duration	0.436 seconds: U0073 0.5 seconds: U0101, U0122, U0155 2 seconds: U0402, U0416, U0423
MIL Operation	Immediately after
Sequence of Operation	None

TYPICAL ENABLING CONDITIONS

All

Battery Voltage	10.9V or more

U0073

Overlap prohibited DTC	U0101, U0122, U0155, U0402, U0416, U0423 (CAN system (ECM))

U0101

Overlap prohibited DTC	U0073, U0122, U0155, U0402, U0416, U0423 (CAN system (ECM))

U0122

Overlap prohibited DTC	U0073, U0101, U0155, U0402, U0416, U0423 (CAN system (ECM))

U0155

Overlap prohibited DTC	U0073, U0101, U0122, U0402, U0416, U0423 (CAN system (ECM))

U0402

Overlap prohibited DTC	U0073, U0101, U0122, U0155, U0416, U0423 (CAN system (ECM))

U0416

Overlap prohibited DTC	U0073, U0101, U0122, U0155, U0402, U0423 (CAN system (ECM))

U0423

Overlap prohibited DTC	U0073, U0101, U0122, U0155, U0402, U0416 (CAN system (ECM))

TYPICAL MALFUNCTION THRESHOLDS

U0073

Control module communication bus "A" OFF status	ON

U0101

Failed communication with TCM	ON

U0122

Failed communication with skid control ECM	ON

U0155

Failed communication with combination meter ASSY	ON

U0402

Communication counter between ECM and TCM	Does not increase.

U0416

Communication counter between ECM and skid control ECM	Does not increase.

U0423

Communication counter between ECM and combination meter ASSY	Does not increase.

Description of functions

Test drive

Perform test drive to check if the DTC recurs.

1. Connect the SSM4 to the DLC3.
2. Turn the ignition switch to ON.
3. Turn on the SSM4.
4. Follow the SSM4 on-screen instructions to clear the DTCs. (Refer to ES - 28)
5. Turn the ignition switch to OFF, and wait for 30 seconds.
6. Turn the ignition switch to ON.
7. Turn on the SSM4.
8. Start the engine.
   NOTE:
   If the engine cannot be started, crank the engine for 10 seconds or more.
9. Idle the engine for 20 seconds or more.
10. Follow the SSM4 on-screen instructions to check the DTC. (Refer to ES - 28)

Inspection steps

Go to troubleshooting for CAN communication system. (Refer to NW - 30)

NOTE:

- Read the freeze frame data using the SSM4. A part of engine running conditions under which the engine trouble occurred is recorded in the freeze frame data, which is useful for trouble shooting.
- When CAN communication system error occurs, the engine control computer cannot receive the updated information from each controller. Therefore, check of the freeze frame data corresponding to the DTCs related to the controllers is no longer useful for troubleshooting.
- When the diagnostic codes for CAN communication error and the corresponding sensor error are both output simultaneously, the CAN communication error must be restored before troubleshooting the error codes for the sensors.

1	Read DTC

(1) Connect the SSM4 to the DLC3.
(2) Turn the ignition switch to ON.
(3) Turn on the SSM4.
(4) Follow the SSM4 on-screen instructions to check the DTC. (Refer to ES - 28)

Result	Go to
U0073, U0101, U0122, U0155, U0402, U0416, or U0423 is output.	A

Result	Go to
Either U0073, U0101, U0122, U0155, U0402, U0416, or U0423, and other DTCs are output.	B

B → To corresponding DTC chart (refer to ES - 12)

A

To CAN communication system (Refer to NW - 30)

ES

EVAP system

Related DTC

DTC No.	Monitoring items	Reference pages
P0441	Purge flow	ES - 337
P0451	Difference in pressure between canister pressure sensor (integrated into canister pump module) and air pressure sensor	ES - 343
P0452	Canister pressure sensor (integrated into canister pump module) voltage LOW	
P0453	Canister pressure sensor (integrated into canister pump module) voltage HIGH	
P0455	Large leak from EVAP	ES - 351
P0456	Small leak from EVAP	
P0458	Purge VSV voltage LOW	ES - 365
P0459	Purge VSV voltage HIGH	
P1449	Clogged air filter (integrated into canister pump module)	ES - 435
P1451	Clogged pipe	ES - 351
P2404	• Flow rate rises at reference orifice (integrated into canister pump module). • Flow rate reduces at reference orifice (integrated into canister pump module).	
P2401	Leak detection pump stuck OFF (integrated into canister pump module)	ES - 581
P2402	Leak detection pump stuck ON (integrated into canister pump module)	
P2419	Closing of vent valve stuck (integrated into canister pump module) or not	
P2420	Opening of vent valve stuck (integrated into canister pump module) or not	
P2610	Soak timer (integrated into ECM)	ES - 589

When the DTCs related to the EVAP system have been stored, the malfunctioning section can be located using the table below.

ES

Malfunctioning Areas \ DTCs	P0441	P0451	P0452	P0453	P0455	P0456	P0458	P0459
Purge valve stuck open	●				●			
Purge valve stuck closed	●							
Purge valve low output							●	
Purge valve high output								●
Canister pressure sensor signal fixed		●						
Canister pressure sensor low output			●					
Canister pressure sensor high output				●				
Gross leak	●				●			
Small leak						●		

Malfunctioning Areas \ DTCs	P1449	P1451	P2401	P2402	P2404	P2419	P2420
Reference orifice low-flow					●		
Reference orifice high-flow					●		
Leak detection pump stuck OFF			●				
Leak detection pump stuck ON				●	●		
Vent valve stuck closed					●	●	
Vent valve stuck open					●		●
Canister filter clogged		●					
Pipe clogged	●						

CAUTION:
If the standard pressure difference between 1st check and 2nd check is out of specification, all DTCs (P0455, P0456, P1451, P2404) related to standard pressure are stored.
Circuit description

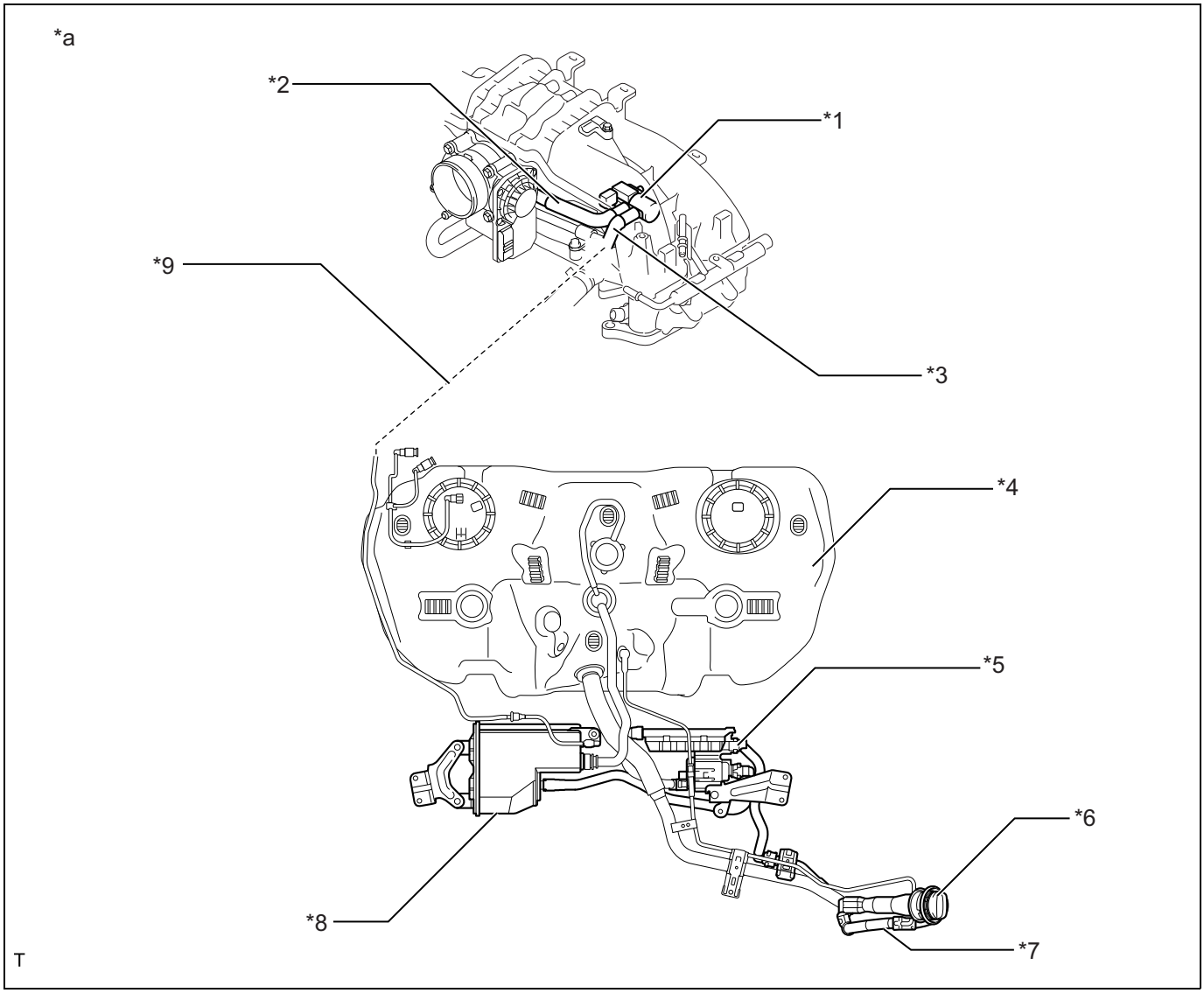

Captions in illustration

*1	Purge VSV	*2	EVAP hose (To intake manifold)
*3	EVAP hose (From canister)	*4	Fuel tank
*5	Canister pump module - Canister pressure sensor - Leak detection pump - Canister filter	*6	Fuel cap
*7	Air inlet port	*8	Canister
*9	Purge line	-	-
*a	Position of EVAP (evaporative emission) system	-	-

NOTE:
The canister pressure sensor, canister filter, and leak detection pump are integrated into the canister pump module.

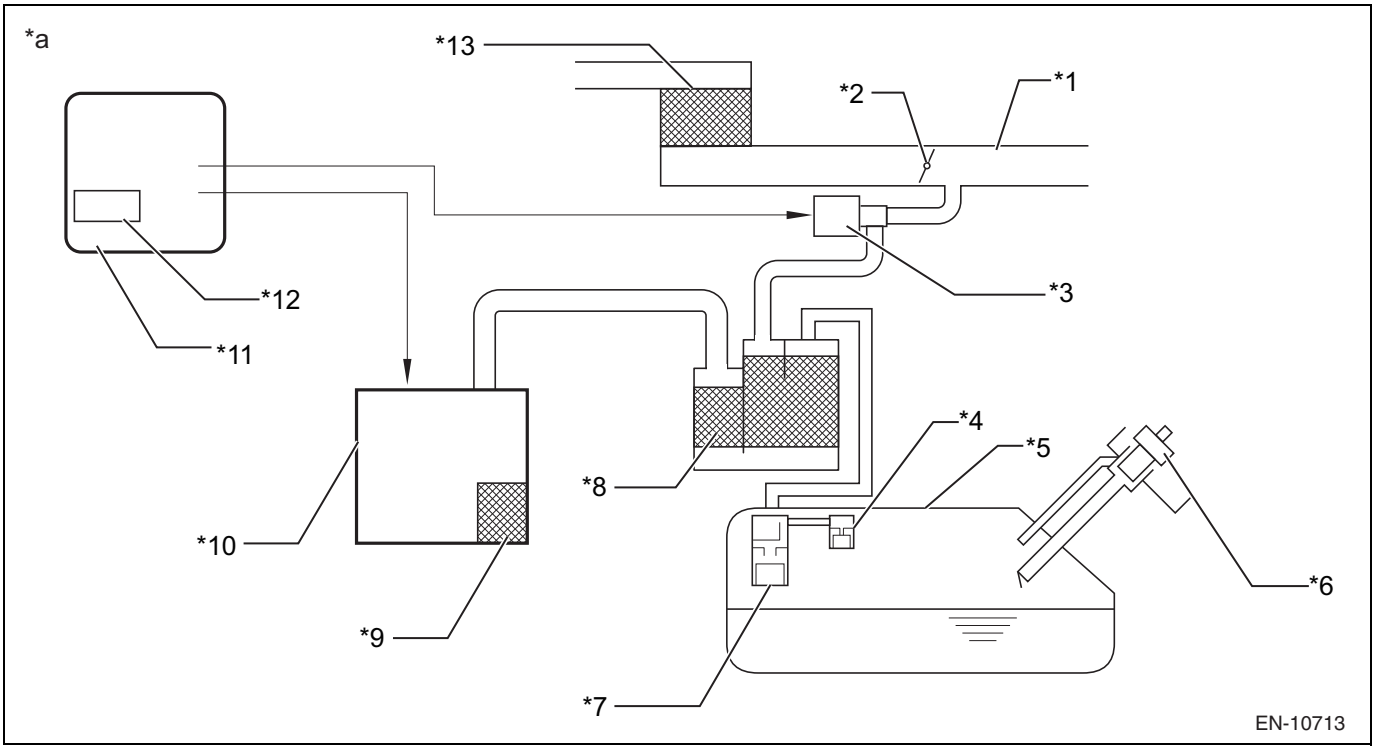

Captions in illustration

*1	Intake manifold	*2	Throttle valve
*3	Purge VSV	*4	Cutoff valve
*5	Fuel tank	*6	Fuel cap
*7	Fuel tank vent valve	*8	Canister (charcoal filter)
*9	Canister filter	*10	Canister pump module
*11	ECM	*12	Soak timer
*13	Air cleaner	-	-
*a	EVAP system circuit	-	-

CAUTION:
In this vehicle, the EVAP system is not sealed even if the vent valve is turned to ON. In order to check for possible leakage from EVAP system, disconnect the air inlet drain hose, and apply pressure from the barometric pressure side of the canister.
With the engine running, under the specified condition (closed loop, etc.), the ECM opens the purge VSV and purges the fuel vapor accumulated in the canister to the intake manifold. The ECM changes the duty cycle ratio of the purge VSV and controls the purge flow rate.
The purge flow rate is determined by the intake manifold pressure. Pressure in the canister via vent valve ensures the retention of the purge flow when the negative (vacuum) pressure is applied to the canister.
In order to confirm the appropriate operation of the EVAP system, the following 2 monitors work.

1. Purge flow monitor
   The purge flow monitor consists of two monitors. First monitoring is performed every time, and the second monitoring is performed as necessary.
   - First monitoring
     With the engine running, when the purge VSV is ON (open), the ECM monitors the purge flow by measuring the fluctuation in EVAP pressure. If the pressure variation exceeds the threshold value, the ECM initiates second monitoring.
   - Second monitoring
     The vent valve turns to ON (Closed) and EVAP pressure monitoring is carried out. If the pressure fluctuation exceeds the threshold, the ECM judges that the purge VSV is in the stuck close status and illuminates the MIL, and stores DTC P0441 (2 trip detection logic).

Atmospheric pressure measurement:
In order to securely perform a reliable malfunction detection, the ECM measures the fluctuation in barometric pressure (before and after the purge flow monitor).

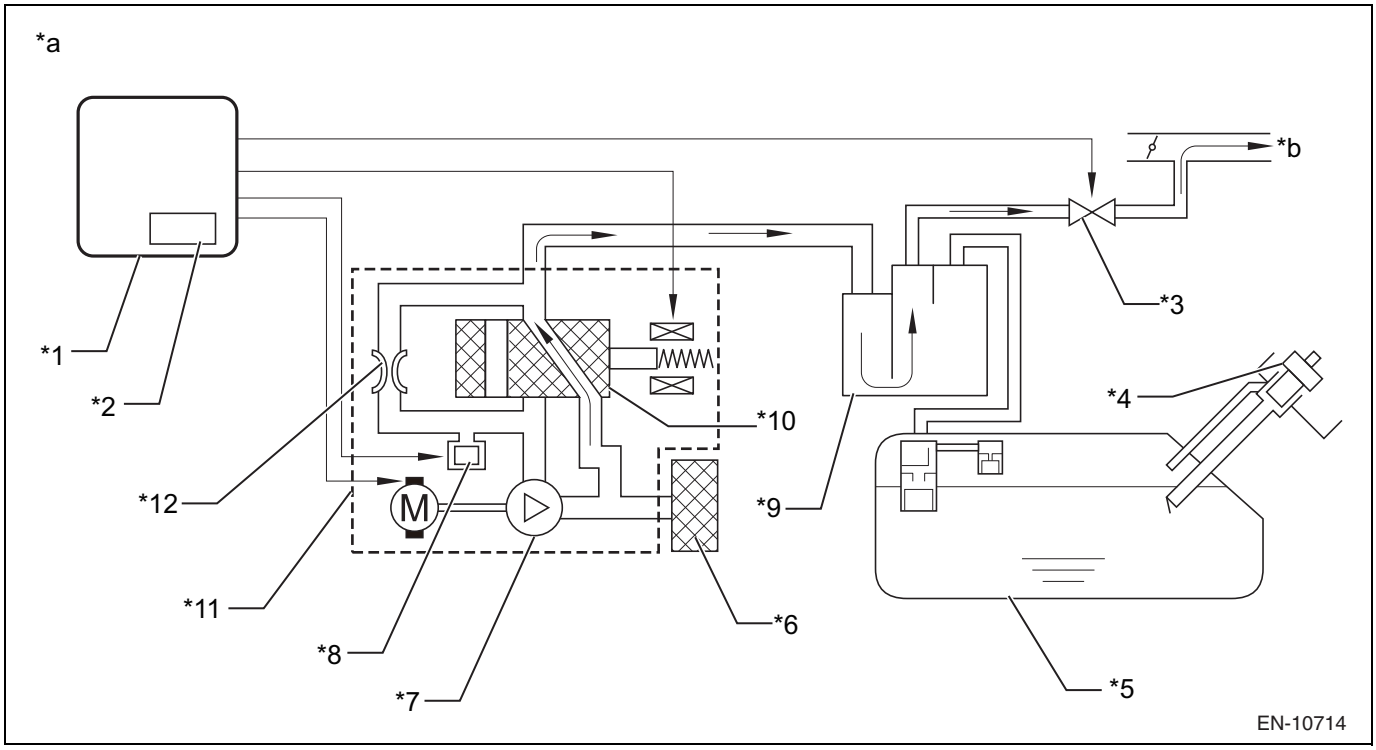

Captions in illustration

*1	ECM	*2	Soak timer
*3	Purge VSV (ON)	*4	Fuel cap
*5	Fuel tank	*6	Canister filter
*7	Leak detection pump (OFF)	*8	Canister pressure sensor
*9	Canister	*10	Vent valve (OFF)
*11	Canister pump module	*12	Reference orifice (0.02 inch)
*a	EVAP purge flow	*b	To the intake manifold

Parts	Operation
Canister	Contains activated charcoal to absorb the EVAP (evaporative emission) generated in the fuel tank.
Cutoff valve	Located in the fuel tank. This valve is designed to prevent the accidental fuel spill when the vehicle overturns.
Purge VSV (vacuum switching valve)	Opens and closes the line between canister and intake manifold. The ECM controls the EVAP purge flow by the purge VSV. The ECM opens the purge VSV to release the evaporative emission absorbed by the canister into the intake manifold. Amount of evaporative emission released into the intake manifold controlled by the purge VSV duty cycle (energized time) (Open: ON, Close: OFF)
Fuel tank vent valve	Located in the fuel tank. Purges the fuel vapor generated during refueling into the canister. Also detects the highest fuel level in the fuel tank.
Soak timer	Integrated into the ECM. In order to ensure the accuracy of the EVAP monitor, 5-hours (+/-15 min.) measurement is performed after ignition switch has been turned to OFF. This will lower the fuel temperature and stabilize the EVAP pressure. After approximately 5 hours have passed, the ECM will start up. (Fig. 3)
Canister pump module	Consists of the following components (a, b, c, d). The canister pump module cannot be disassembled.
(a) Vent valve	Ventilates and closes the EVAP system. When the ECM turns on the valve, the EVAP system is closed. When the ECM turns off the valve, the EVAP system is ventilated. Closes the purge VSV, turns the vent valve to ON (close), and operates the leak detection pump. In order to inspect for EVAP leakage, build up negative pressure (vacuum) into the EVAP system. (Fig. 1)

Parts	Operation
(b) Canister pressure sensor	Indicates pressures such as voltage. The ECM applies the adjusted 5 V to the pressure sensor and monitors the EVAP system pressure using the feedback from the sensor. (Fig. 2)
(c) Leak detection pump	Builds up the negative pressure (vacuum) in the EVAP system for leak detection.
(d) Reference orifice	Equipped with an opening of 0.02-in. dia. In order to monitor the standard pressure, closes the purge VSV, turns the vent valve to OFF, and operates the leak detection pump. Eventually, the negative pressure (vacuum) is built up through the orifice. Standard pressure indicates the small leakage from the EVAP.

ES

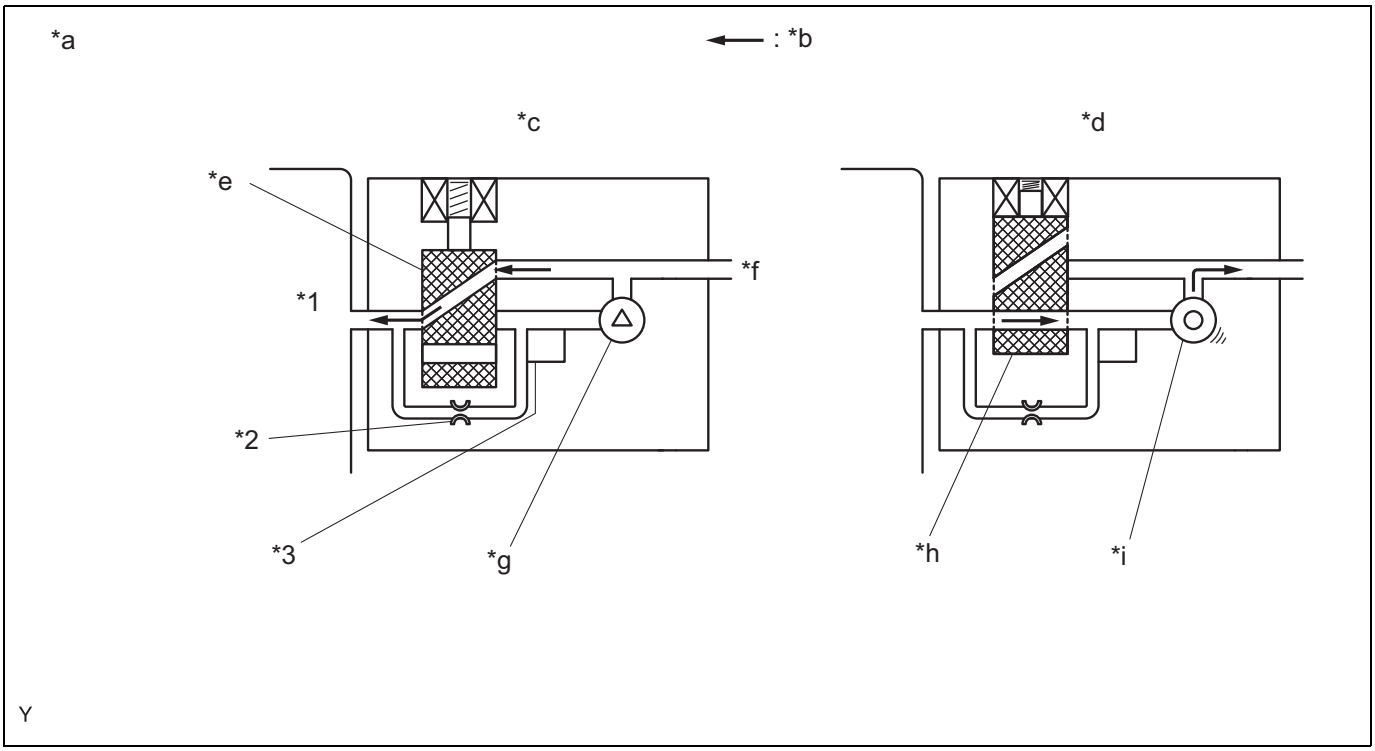

Captions in illustration

*1	Canister	*2	Reference orifice (0.02 inch)
*3	Canister pressure sensor	-	-
*a	Canister pump module (Fig. 1)	*b	Airflow
*c	Condition: Purge flow	*d	Condition: Leakage check
*e	Vent valve: OFF (vent)	*f	To canister filter (barometric pressure)
*g	Leak detection pump: OFF	*h	Vent valve: ON (Closed)
*i	Leak detection pump: ON	-	-

Canister Pressure Sensor Specification (fig.2)

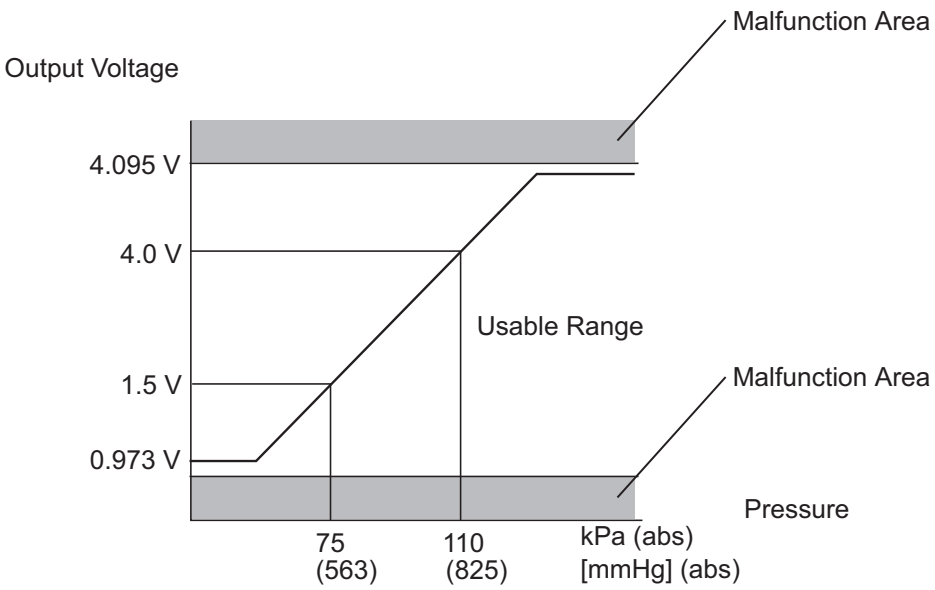

HINT:

Standard atmospheric pressure is 101.3 kPa (abs) [760 mmHg (abs)]

fig. 3

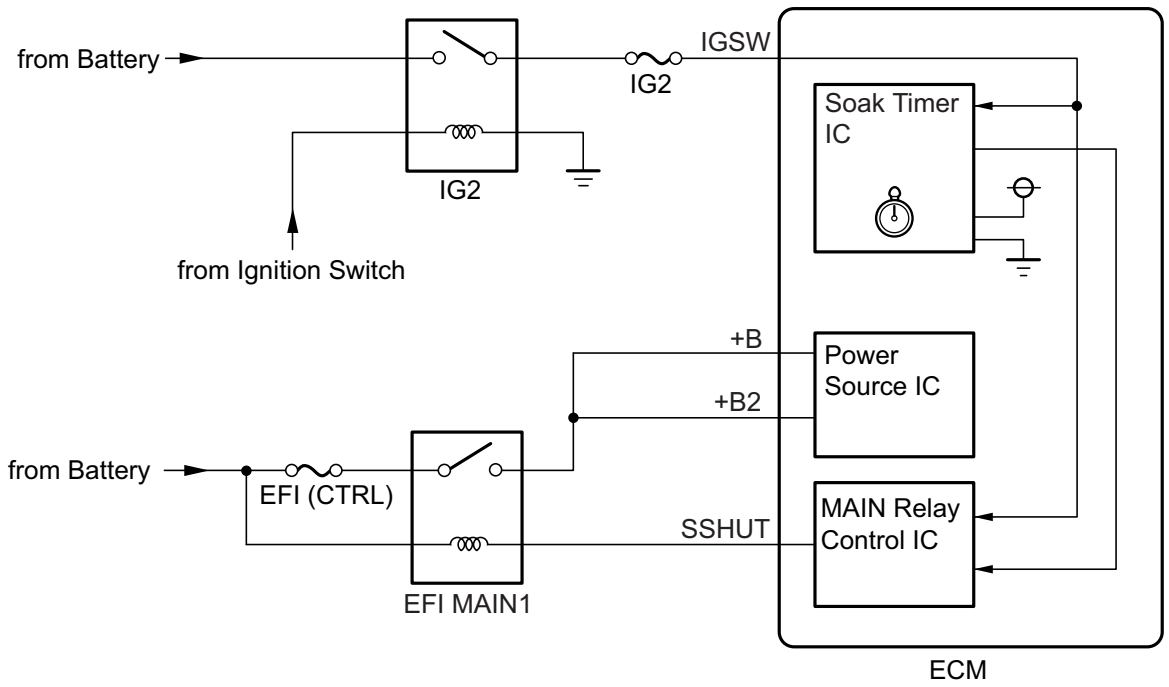

Circuit figure
Refer to DTC P0451. (Refer to ES - 346)

Fuel pump control system

Circuit description

ES

Fuel pump circuit (low pressure side) consists of engine control computer, fuel pump ASSY (low pressure side) and fuel pump control computer ASSY that operates the fuel pump ASSY (low pressure side). Based on engine output, engine control computer determines the speed of fuel pump ASSY (low pressure side). The speed is converted into the load signal, and the signal is transmitted to the fuel pump control computer ASSY. Based on the signal transmitted from the engine control computer, the fuel pump control computer ASSY adjusts the operating speed of the fuel pump (low pressure side).

Circuit figure

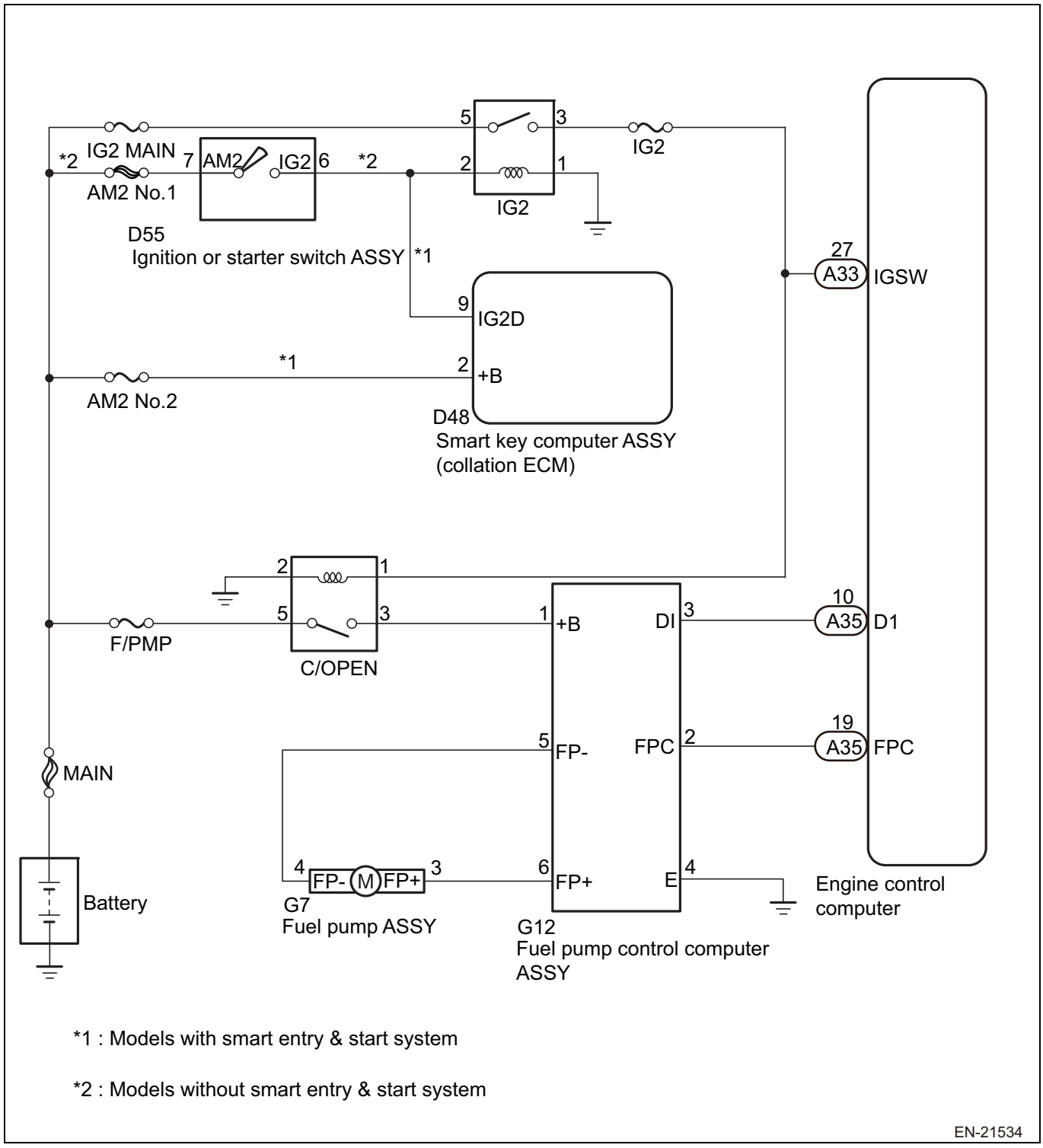

Inspection steps

CAUTION:

Before performing troubleshooting, check the fuse for this circuit.

1	Performing of SSM4 [Active Test] ([Control the Fuel Pump Duty])

(1) Connect the SSM4 to the DLC3.

(2) Turn the ignition switch to ON.

(3) Select the following menu items using the SSM4. : [Each System] / [Engine Control System] / [Work Support] / [Active Test] / [Control the Fuel Pump Duty]
(4) In [Active Test], check operation noise of the fuel pump (low-pressure side).

Criteria

[Control the Fuel Pump Duty]	Criteria
20 % and 80 %	Operating sound is heard.
OFF	Operating sound is not heard.

ES

NG → Go to Step 8.

OK

2	Performing of SSM4 [Active Test] ([Control the Fuel Pump Duty])

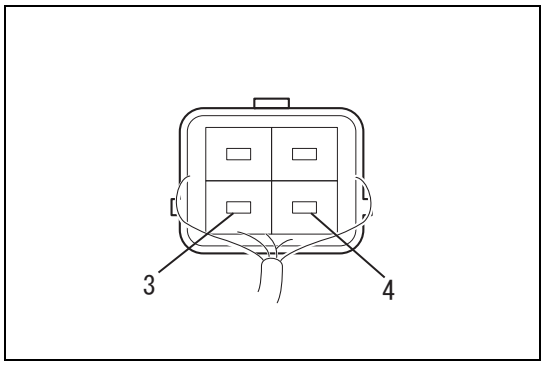

(1) Remove the fuel tank ASSY. (Refer to FU - 67)
(2) Remove the fuel pump ASSY (low pressure side) from the fuel tank ASSY.
(3) Completely remove the remaining fuel from the fuel pump ASSY (low pressure side).
(4) Install the connector for the fuel pump ASSY (low pressure side).
WARNING:
Check that no fuel remains inside or around the fuel pump ASSY.
(5) Connect the SSM4 to the DLC3.
(6) Turn the ignition switch to ON.
(7) Select the following menu items using the SSM4. : [Each System] / [Engine Control System] / [Work Support] / [Active Test] / [Control the Fuel Pump Duty]
(8) Measure the voltage between each terminal when [Active Test] is performed.

Voltage

Inspection terminals	Inspection conditions	Standard value
3 - 4	Fuel pump duty: 25%	3.2 to 4.05 V
3 - 4	Fuel pump duty: 80%	8.8 to 12.5 V

Captions in illustration

*a	Connector connected (Fuel pump ASSY (low pressure side))

(9) Select the following menu items using the SSM4. : [Each System] / [Engine Control System] / [Work Support] / [Active Test] / [Control the Fuel Pump Duty]
(10) Measure the voltage between each terminal when [Active Test] is performed.

Voltage

Inspection terminals	Inspection conditions	Standard value
3 - 4	Fuel pump duty: 90 %	9.0 to 14.0 V

NOTE:
- Measure the voltage with all connectors connected.
- Before performing this inspection, check that the battery voltage is 11 to 14 V (battery not discharged).

NG → Go to Step 6.

OK

3	Check wiring harness and connector (engine control computer - fuel pump control computer ASSY)

NOTE:
For the inspection procedure and precautions for wiring harnesses and connectors, refer to IN - 36.

(1) Disconnect the connector for the engine control computer.
(2) Disconnect the connector for the fuel pump control computer ASSY.
(3) Measure the resistance between the terminals. (For terminal arrangement, refer to ES - 36.)

ES

Resistance (open circuit check)

Inspection terminals	Inspection conditions	Standard value
A35-19 (FPC) - G12-2 (FPC)	Always	Less than 1 Ω

Resistance (short circuit check)

Inspection terminals	Inspection conditions	Standard value
A35-19 (FPC) and G12-2 (FPC) - other terminals and chassis ground	Always	10 k Ωor more

NG → Repair or replacement of wiring harness or connector

OK

4	Replacement of fuel pump ASSY (low pressure side)

(1) Replace the fuel pump ASSY (low pressure side). (Refer to FU - 47)

Next

5	Check trouble symptom

(1) Check whether the trouble symptom is improved or not.

Result

Result	Go to
Symptom is improved.	A
Symptom is not improved.	B

B → Replacement of the engine control computer (Refer to ES - 670)

A

Complete

6	Replacement of the fuel pump control computer ASSY

(1) Replace the fuel pump control computer ASSY. (Refer to FU - 63)

Next

7	Check trouble symptom

(1) Check whether the trouble symptom is improved or not.

Result

Result	Go to
Symptom is improved.	A
Symptom is not improved.	B

ES

B → Replacement of the engine control computer (Refer to ES - 670)

A

Complete

8	Check fuel pump control computer ASSY (input voltage)

NOTE:
For the inspection procedure and precautions for wiring harnesses and connectors, refer to IN - 36.

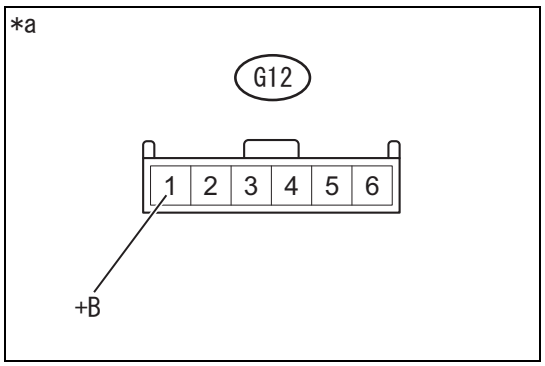

(1) Disconnect the connector for the fuel pump control computer ASSY.
(2) Turn the ignition switch to ON.
(3) Measure the voltage between the terminals.

Voltage

Inspection terminals	Inspection conditions	Standard value
G12-1 (+B) - chassis ground	IG ON	11 to 14 V

Captions in illustration

*a	Front side of vehicle wiring harness connector (connector for the fuel pump control computer ASSY)

NG → Go to Step 14.

OK

9	Check wiring harness and connector (fuel pump ASSY - fuel pump control computer ASSY)

NOTE:
For the inspection procedure and precautions for wiring harnesses and connectors, refer to IN - 36.

(1) Disconnect the connector for the fuel pump ASSY (low pressure side).
(2) Disconnect the connector for the fuel pump control computer ASSY.
(3) Measure the resistance between the terminals.

Resistance (open circuit check)

Inspection terminals	Inspection conditions	Standard value
G7-4 (FP-) - G12-5 (FP-)	Always	Less than 1 Ω
G7-3 (FP+) - G12-6 (FP+)	Always	Less than 1 Ω

Resistance (short circuit check)

Inspection terminals	Inspection conditions	Standard value
G7-4 (FP-) and G12-5 (FP-) - other terminals and chassis ground	Always	10 k Ωor more
G7-3 (FP+) and G12-6 (FP+) - other terminals and chassis ground	Always	10 k Ωor more

NG → Repair or replacement of wiring harness or connector

OK

ES

10	Perform a unit inspection of fuel pump ASSY (low pressure side)

(1) Perform a unit inspection on the fuel pump (low-pressure side) (Refer to FU - 56)

NG → Replacement of the fuel pump ASSY (low-pressure side) (Refer to FU - 47)

OK

11	Check wiring harness and connector (fuel pump control computer ASSY - engine control computer)

NOTE:
For the inspection procedure and precautions for wiring harnesses and connectors, refer to IN - 36.

(1) Disconnect the connector for the engine control computer.
(2) Disconnect the connector for the fuel pump control computer ASSY.
(3) Measure the resistance between the terminals. (For terminal arrangement, refer to ES - 36.)

Resistance (open circuit check)

Inspection terminals	Inspection conditions	Standard value
A35-19 (FPC) - G12-2 (FPC)	Always	Less than 1 Ω
G12-4 (E) - chassis ground	Always	Less than 1 Ω

Resistance (short circuit check)

Inspection terminals	Inspection conditions	Standard value
A35-19 (FPC) and G12-2 (FPC) - other terminals and chassis ground	Always	10 k Ωor more

NG → Repair or replacement of wiring harness or connector

OK

12	Replacement of the fuel pump control computer ASSY

(1) Replace the fuel pump control computer ASSY. (Refer to FU - 63)

Next

13	Check trouble symptom

(1) Check whether the trouble symptom is improved or not.

Result

Result	Go to
Symptom is improved.	A
Symptom is not improved.	B

B → Replacement of the engine control computer (Refer to ES - 670)

A

ES

Complete

14	Check wiring harness and connector (C/OPEN relay - fuel pump control computer ASSY)

NOTE:
For the inspection procedure and precautions for wiring harnesses and connectors, refer to IN - 36.
(1) Remove the C/OPEN relay from the engine compartment relay block.
(2) Disconnect the connector for the fuel pump control computer ASSY.
(3) Measure the resistance between the terminals.
CAUTION:
When using tester probes to take measurements at a holder, do not push them hard against the holder. Otherwise the holder could be damaged.

Resistance (open circuit check)

Inspection terminals	Inspection conditions	Standard value
3 (C/OPEN relay holder) - G12-1 (+B)	Always	Less than 1 Ω
2 (C/OPEN relay holder) - chassis ground	Always	Less than 1 Ω

Resistance (short circuit check)

Inspection terminals	Inspection conditions	Standard value
3 (C/OPEN relay holder) and G12-1 (+B) - other terminals and chassis ground	Always	10 k Ωor more

NG → Repair or replacement of wiring harness or connector

OK

15	Check power supply voltage (C/OPEN relay)

NOTE:
Refer to IN - 36for inspection procedure and precautions of wiring harness and connector.

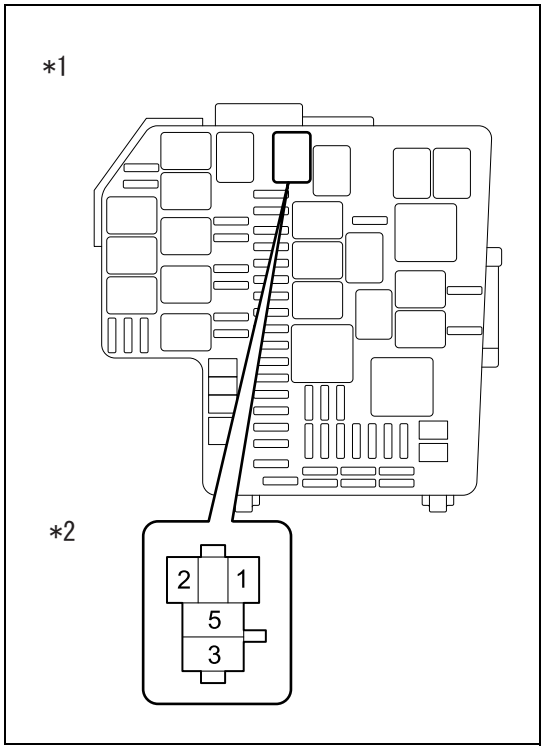

(1) Remove the C/OPEN relay from the engine compartment relay block.
(2) Measure the resistance between the terminals.

CAUTION:
When using tester probes to take measurements at a holder, do not push them hard against the holder. Otherwise the holder could be damaged.

Resistance (open circuit check)

Inspection terminals	Inspection conditions	Standard value
5 (C/OPEN relay holder) - chassis ground	Always	11 to 14 V

Captions in illustration

*1	Engine compartment relay block
*2	C/OPEN relay holder

NG → Inspection of the ECM power supply system (Refer to ES - 642)

OK

16	Check wiring harness and connector (C/OPEN relay engine control computer - IG2 relay)

NOTE:
Refer to IN - 36for inspection procedure and precautions of wiring harness and connector.

(1) Disconnect the connector for the engine control computer.
(2) Remove the C/OPEN relay and IG2 relay from the engine compartment relay block.
(3) Measure the resistance between the terminals.

CAUTION:
When using tester probes to take measurements at a holder, do not push them hard against the holder. Otherwise the holder could be damaged.

Resistance (open circuit check)

Inspection terminals	Inspection conditions	Standard value
1 (C/OPEN relay holder) - A33-27 (IGSW)	Always	Less than 1 Ω
1 (C/OPEN relay holder) - 3 (IG2 relay holder)	Always	Less than 1 Ω

Resistance (short circuit check)

Inspection terminals	Inspection conditions	Standard value
1 (C/OPEN relay holder), A33-27 (IGSW) and 3 (IG2 relay holder) - other terminals and chassis ground	Always	10 k Ωor more

NG → Repair or replacement of wiring harness or connector

OK

Replacement of the engine control computer (Refer to ES - 670)

Starter system (models with smart entry & start system)

Circuit description

During cranking, the engine control computer detects the starter signal (STSW2 and STA signal) from the starter relay drive circuit and performs the engine control at engine start.

When the start signal is input from the smart key computer ASSY, the engine control computer transmits the operating signal (STA signal) to the ST relay and drives the starter until the complete engine start-up is detected.

Circuit figure

ES

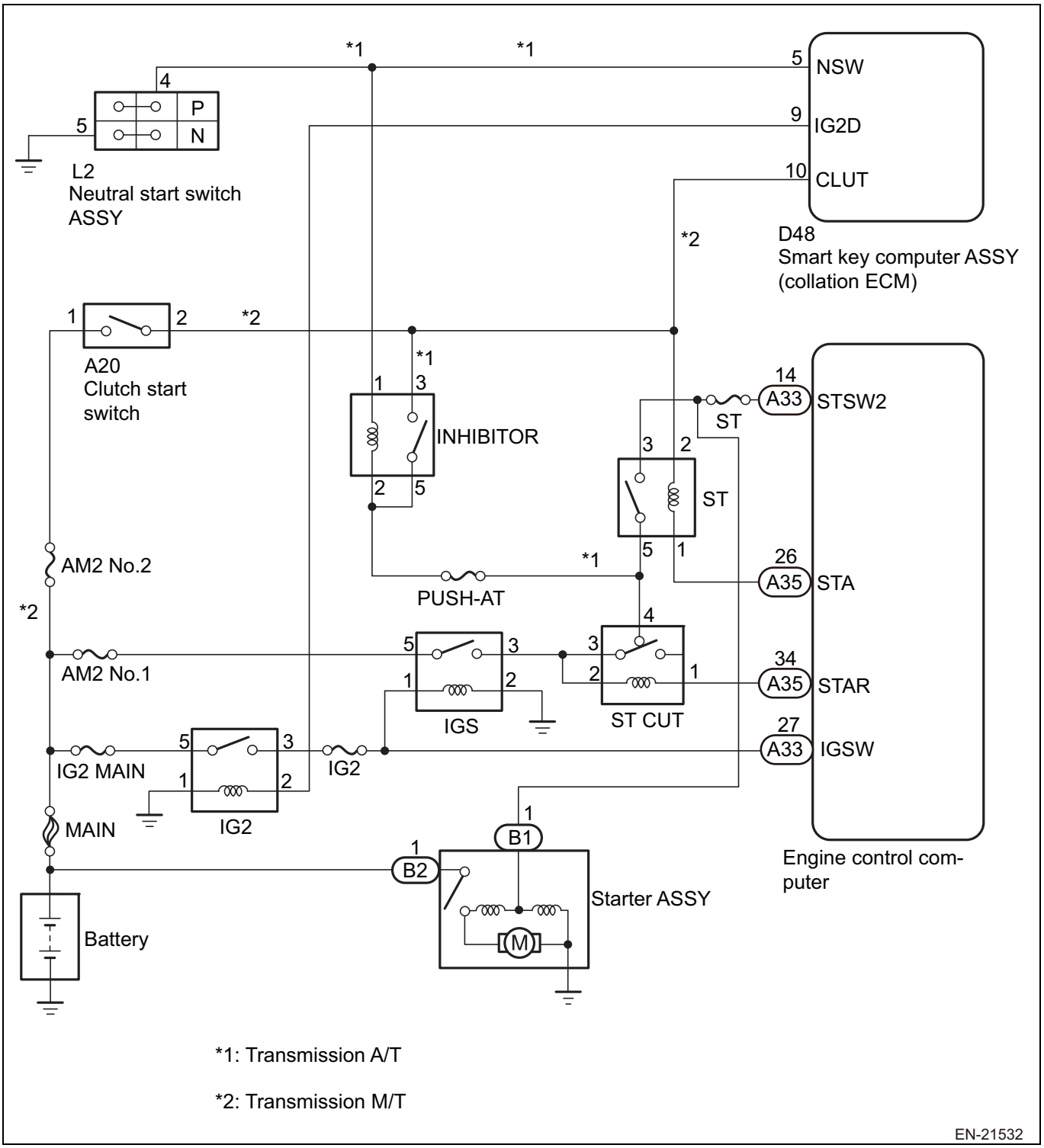

Inspection steps
CAUTION:
Before performing troubleshooting, check the fuse for this circuit.

1	Check if engine is cranked

(1) Check if the engine is cranked.

Result

Result	Go to
Engine is not cranked.	A
Engine is cranked.	B

B → Go to Step 19.

A

2	Reading of SSM4 data ([Starter Switch])

(1) Connect the SSM4 to the DLC3.
(2) Turn the ignition switch to ON.
(3) Turn on the SSM4.
(4) Select the following menu items using the SSM4. : [Each System] / [Engine Control System] / [Data monitor] / [Starter Switch]
(5) Read [Starter Switch] while the engine is cranked.
Criteria: Starter signal turns on.

NG → Go to Step 4.

OK

3	Check wiring harness and connector (ST relay - engine control computer - starter ASSY)

NOTE:
For the inspection procedure and precautions for wiring harnesses and connectors, refer to IN - 36.
(1) Disconnect the connector for the engine control computer.
(2) Remove the ST relay from the engine compartment relay block.
(3) Disconnect the connector for starter ASSY.
(4) Measure the resistance between the terminals. (For terminal arrangement, refer to ES - 36.)
CAUTION:
When using tester probes to take measurements at a relay holder, do not push them hard against the holder. Otherwise the holder could be damaged.

Resistance (open circuit check)

Inspection terminals	Inspection conditions	Standard value
A33-14 (STSW2) - B1-1	Always	Less than 1 Ω
3 (ST relay holder) - B1-1	Always	Less than 1 Ω

Resistance (short circuit check)

Inspection terminals	Inspection conditions	Standard value
A33-14 (STSW2), B1-1 and 3 (ST relay holder) - other terminals and chassis ground	Always	10 k Ωor more

NG → Repair or replacement of wiring harness or connector

OK

4	Reading of SSM4 data ([Starter cut relay])

(1) Connect the SSM4 to the DLC3.
(2) Turn the ignition switch to ON.
(3) Turn on the SSM4.
(4) Select the following menu items using the SSM4. : [Each System] / [Engine Control System] / [Data monitor] / [Starter cut relay]
(5) Read [Starter cut relay] while the engine is cranked.
Criteria: The starter cut relay turns on.

Result

Result	Go to
Malfunction	A
Normal (Transmission A/T)	B
Normal (Transmission M/T)	C

B → Go to Step 9.

C → Go to Step 14.

A

5	Check wiring harness and connector (engine control computer - ST CUT relay)

NOTE:
For the inspection procedure and precautions for wiring harnesses and connectors, refer to IN - 36.
(1) Disconnect the connector for the engine control computer.
(2) Remove the ST CUT relay from the engine compartment relay block.
(3) Measure the resistance between the terminals. (For terminal arrangement, refer to ES - 36.)
CAUTION:
When using tester probes to take measurements at a relay holder, do not push them hard against the holder. Otherwise the holder could be damaged.

Resistance (open circuit check)

Inspection terminals	Inspection conditions	Standard value
A35-34 (STAR) - 1 (ST CUT relay holder)	Always	Less than 1 Ω

Resistance (short circuit check)

Inspection terminals	Inspection conditions	Standard value
A35-34 (STAR) and 1 (ST relay holder) - other terminals and chassis ground	Always	10 k Ωor more

NG → Repair or replacement of wiring harness or connector

OK

6	Check wiring harness and connector (IGS relay - ST CUT relay - chassis ground)

NOTE:
For the inspection procedure and precautions for wiring harnesses and connectors, refer to IN - 36.

(1) Remove the IGS relay and ST CUT relay from the engine compartment relay block.
(2) Measure the resistance between the terminals.
CAUTION:
When using tester probes to take measurements at a relay holder, do not push them hard against the holder. Otherwise the holder could be damaged.

ES

Resistance (open circuit check)

Inspection terminals	Inspection conditions	Standard value
3 (ST CUT relay holder) - 3 (IGS relay holder)	Always	Less than 1 Ω
2 (ST CUT relay holder) - 3 (IGS relay holder)	Always	Less than 1 Ω
2 (IGS relay holder) - chassis ground	Always	Less than 1 Ω

Resistance (short circuit check)

Inspection terminals	Inspection conditions	Standard value
3 (ST CUT relay holder), 2 (ST CUT relay holder) and 3 (IGS relay holder) - other terminals and chassis ground	Always	10 k Ωor more

NG → Repair or replacement of wiring harness or connector

OK

7	Check power supply voltage (IGS relay)

NOTE:
For the inspection procedure and precautions for wiring harnesses and connectors, refer to IN - 36.

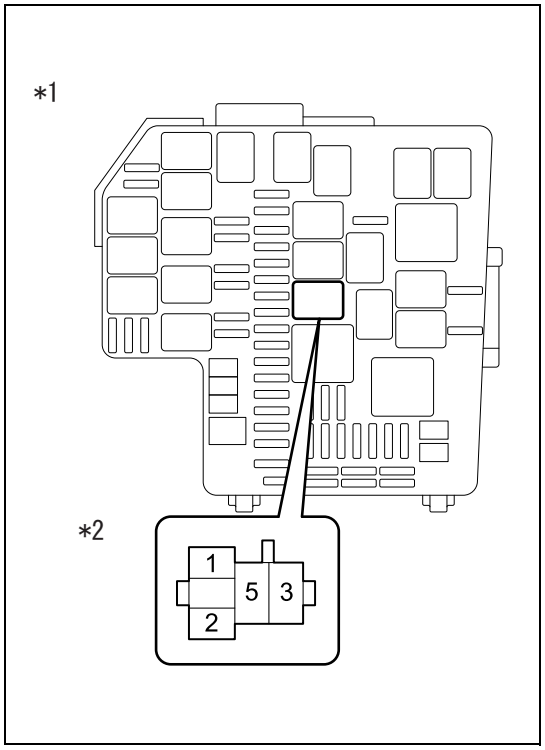

(1) Remove the IGS relay from the engine compartment relay block.
(2) Measure the voltage between the terminals.
CAUTION:
When using tester probes to take measurements at a relay holder, do not push them hard against the holder. Otherwise the holder could be damaged.

Voltage

Inspection terminals	Inspection conditions	Standard value
5 (IGS relay holder) - chassis ground	Always	11 to 14 V

Captions in illustration

*1	Engine compartment relay block
*2	IGS relay holder

NG → Repair or replacement of wiring harness or connector

OK

8	Check wiring harness and connector (engine control computer -IG2 relay - IGS relay)

NOTE:
For the inspection procedure and precautions for wiring harnesses and connectors, refer to IN - 36.
(1) Disconnect the connector for the engine control computer.
(2) Remove the IG2 relay and IGS relay from the engine compartment relay block.
(3) Measure the resistance between the terminals. (For terminal arrangement, refer to ES - 36.)
CAUTION:
When using tester probes to take measurements at a relay holder, do not push them hard against the holder. Otherwise the holder could be damaged.

Resistance (open circuit check)

Inspection terminals	Inspection conditions	Standard value
A33-27 (IGSW) - 3 (IG2 relay holder)	Always	Less than 1 Ω
3 (IG2 relay holder) - 1 (IGS relay holder)	Always	Less than 1 Ω

Resistance (short circuit check)

Inspection terminals	Inspection conditions	Standard value
A33-27 (IGSW), 3 (IG2 relay holder) and 1 (IGS relay holder) - other terminals and chassis ground	Always	10 k Ωor more

NG → Repair or replacement of wiring harness or connector

OK

Inspection of smart entry & start system (start function) (Refer to TD - 146)

9	Perform a unit inspection of neutral start switch ASSY

(1) Check the neutral start switch ASSY as a single part. (Refer to AT - 190)

NG → Replacement of neutral start switch ASSY (Refer to AT - 186)

OK

ES

10	Check wiring harness and connector (smart key computer ASSY - neutral start switch ASSY - INHIBITOR relay)

NOTE:
For the inspection procedure and precautions for wiring harnesses and connectors, refer to IN - 36.

(1) Disconnect the connector for neutral start switch ASSY.
(2) Disconnect the connector for smart key computer ASSY.
(3) Remove the INHIBITOR relay from the engine compartment relay block.
(4) Measure the resistance between the terminals.
CAUTION:
When using tester probes to take measurements at a relay holder, do not push them hard against the holder. Otherwise the holder could be damaged.

Resistance (open circuit check)

Inspection terminals	Inspection conditions	Standard value
L2-4 - D48-5 (NSW)	Always	Less than 1 Ω
L2-4-1 (INHIBITOR relay holder)	Always	Less than 1 Ω
L2-5 - chassis ground	Always	Less than 1 Ω

Resistance (short circuit check)

Inspection terminals	Inspection conditions	Standard value
L2-4, D48-5 (NSW) and 1 (INHIBITOR relay holder) - other terminals and chassis ground	Always	10 k Ωor more

NG → Repair or replacement of wiring harness or connector

OK

11	Check wiring harness and connector (ST CUT relay - INHIBITOR relay - ST relay)

NOTE:
For the inspection procedure and precautions for wiring harnesses and connectors, refer to IN - 36.

(1) Remove the ST CUT relay, ST relay and INHIBITOR relay from the engine compartment relay block.
(2) Measure the resistance between the terminals.
CAUTION:
When using tester probes to take measurements at a relay holder, do not push them hard against the holder. Otherwise the holder could be damaged.

Resistance (open circuit check)

Inspection terminals	Inspection conditions	Standard value
4 (ST CUT relay holder) -2 (INHIBITOR relay holder)	Always	Less than 1 Ω
4 (ST CUT relay holder) -5 (INHIBITOR relay holder)	Always	Less than 1 Ω
4 (ST CUT relay holder) - 5 (ST relay holder)	Always	Less than 1 Ω

Resistance (short circuit check)

Inspection terminals	Inspection conditions	Standard value
4 (ST CUT relay holder), 2 (INHIBITOR relay holder), 5 (INHIBITOR relay holder) and 5 (ST relay holder) - other terminals and chassis ground	Always	10 k Ωor more

ES

NG → Repair or replacement of wiring harness or connector

OK

12	Check wiring harness and connector (INHIBITOR relay - ST relay)

NOTE:
For the inspection procedure and precautions for wiring harnesses and connectors, refer to IN - 36.

(1) Remove the ST relay and INHIBITOR relay from the engine compartment relay block.
(2) Measure the resistance between the terminals.
CAUTION:
When using tester probes to take measurements at a relay holder, do not push them hard against the holder. Otherwise the holder could be damaged.

Resistance (open circuit check)

Inspection terminals	Inspection conditions	Standard value
3 (INHIBITOR relay holder) - 2 (ST relay holder)	Always	Less than 1 Ω

Resistance (short circuit check)

Inspection terminals	Inspection conditions	Standard value
3 (INHIBITOR relay holder) and 2 (ST relay holder) - other terminals and chassis ground	Always	10 k Ωor more

NG → Repair or replacement of wiring harness or connector

OK

13	Check wiring harness and connector (engine control computer - ST relay)

NOTE:
For the inspection procedure and precautions for wiring harnesses and connectors, refer to IN - 36.

(1) Disconnect the connector for the engine control computer.
(2) Remove the ST relay from the engine compartment relay block.
(3) Measure the resistance between the terminals. (Refer to ES - 36for the terminal arrangement)
CAUTION:
When using tester probes to take measurements at a relay holder, do not push them hard against the holder. Otherwise the holder could be damaged.

Resistance (open circuit check)

Inspection terminals	Inspection conditions	Standard value
A35-26 (STA) - 1 (ST relay holder)	Always	Less than 1 Ω

Inspection terminals	Inspection conditions	Standard value
A35-26 (STA) and 1 (ST relay holder) - other terminals and chassis ground	Always	10 k Ωor more

NG → Repair or replacement of wiring harness or connector

OK

Inspection of smart entry & start system (start function) (Refer to TD - 146)

14	Perform a unit inspection of clutch start switch ASSY

(1) Check the clutch start switch ASSY as a single part. (Refer to CL - 30)

NG → Replacement of clutch start switch ASSY (Refer to CL - 28)

OK

15	Check clutch start switch ASSY (power supply voltage)

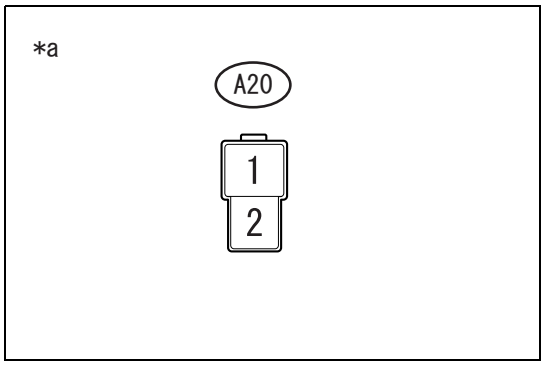

NOTE:
For the inspection procedure and precautions for wiring harnesses and connectors, refer to IN - 36.
(1) Disconnect the connector for clutch start switch ASSY.
(2) Measure the voltage between the terminals.
Voltage

Inspection terminals	Inspection conditions	Standard value
A20-1 - chassis ground	Always	11 to 14 V

Captions in illustration

*a	Front side of vehicle wiring harness connector (Clutch start switch ASSY connector)

NG → Repair or replacement of wiring harness or connector

OK

16	Check wiring harness and connector (clutch start switch ASSY - ST relay - smart key computer ASSY)

NOTE:
For the inspection procedure and precautions for wiring harnesses and connectors, refer to IN - 36.
(1) Disconnect the connector for clutch start switch ASSY.
(2) Remove the ST relay from the engine compartment relay block.
(3) Disconnect the connector for smart key computer ASSY.
(4) Measure the resistance between the terminals.

CAUTION:
When using tester probes to take measurements at a relay holder, do not push them hard against the holder. Otherwise the holder could be damaged.

Resistance (open circuit check)

Inspection terminals	Inspection conditions	Standard value
A20-2 - 2 (ST relay holder)	Always	Less than 1 Ω
A20-2 - D48-10 (CLUT)	Always	Less than 1 Ω

ES

Resistance (short circuit check)

Inspection terminals	Inspection conditions	Standard value
A20-2, D48-10 (CLUT) and 2 (ST relay holder) - other terminals and chassis ground	Always	10 k Ωor more

NG → Repair or replacement of wiring harness or connector

OK

17	Check wiring harness and connector (ST relay - ST CUT relay)

NOTE:
For the inspection procedure and precautions for wiring harnesses and connectors, refer to IN - 36.
(1) Remove the ST relay and ST CUT relay from the engine compartment relay block.
(2) Measure the resistance between the terminals.
CAUTION:
When using tester probes to take measurements at a relay holder, do not push them hard against the holder. Otherwise the holder could be damaged.

Resistance (open circuit check)

Inspection terminals	Inspection conditions	Standard value
5 (ST relay holder) - 4 (ST CUT relay holder)	Always	Less than 1 Ω

Resistance (short circuit check)

Inspection terminals	Inspection conditions	Standard value
5 (ST relay holder) and 4 (ST CUT relay holder) - other terminals and chassis ground	Always	10 k Ωor more

NG → Repair or replacement of wiring harness or connector

OK

18	Check wiring harness and connector (engine control computer - ST relay)

NOTE:
For the inspection procedure and precautions for wiring harnesses and connectors, refer to IN - 36.
(1) Disconnect the connector for the engine control computer.
(2) Remove the ST relay from the engine compartment relay block.
(3) Measure the resistance between the terminals. (Refer to ES - 36for the terminal arrangement)

CAUTION:
When using tester probes to take measurements at a relay holder, do not push them hard against the holder. Otherwise the holder could be damaged.

Resistance (open circuit check)

Inspection terminals	Inspection conditions	Standard value
A35-26 (STA) - 1 (ST relay holder)	Always	Less than 1 Ω
A33-14 (STSW2) - 3 (ST relay holder)	Always	Less than 1 Ω

Resistance (short circuit check)

Inspection terminals	Inspection conditions	Standard value
A35-26 (STA), A33-14 (STSW2), 1 (ST relay holder), and 3 (ST relay holder) - other terminals and chassis ground	Always	10 k Ωor more

NG → Repair or replacement of wiring harness or connector

OK

Replacement of the engine control computer (Refer to ES - 670)

19	Reading of SSM4 data ([Starter Switch])

(1) Connect the SSM4 to the DLC3.
(2) Turn the ignition switch to ON.
(3) Turn on the SSM4.
(4) Select the following menu items using the SSM4. : [Each System] / [Engine Control System] / [Data monitor] / [Starter Switch]
(5) Read [Starter Switch] while the engine is cranked.
Criteria: Starter signal turns on.

Result

Result	Go to
Malfunction	A
Normal	B

B → Go to related circuit inspection listed in symptom table (Refer to ES - 16).

A

20	Check wiring harness and connector (engine control computer - ST relay)

NOTE:
For the inspection procedure and precautions for wiring harnesses and connectors, refer to IN - 36.
(1) Disconnect the connector for the engine control computer.
(2) Remove the ST relay from the engine compartment relay block.
(3) Measure the resistance between the terminals. (For terminal arrangement, refer to ES - 36.)
CAUTION:
When using tester probes to take measurements at a relay holder, do not push them hard against the holder. Otherwise the holder could be damaged.

Resistance (open circuit check)

Inspection terminals	Inspection conditions	Standard value
A33-14 (STSW2) - 3 (ST relay holder)	Always	Less than 1 Ω

Resistance (short circuit check)

Inspection terminals	Inspection conditions	Standard value
A33-14 (STSW2) and 3 (ST relay holder) - other terminals and chassis ground	Always	10 k Ωor more

ES

NG → Repair or replacement of wiring harness or connector

OK

Replacement of the engine control computer (Refer to ES - 670)

Starter system (models without smart entry & start system)

Circuit description

While the engine is being cranked, the starter operation signal is also transmitted to the STSW terminal of the engine control computer.

Circuit figure

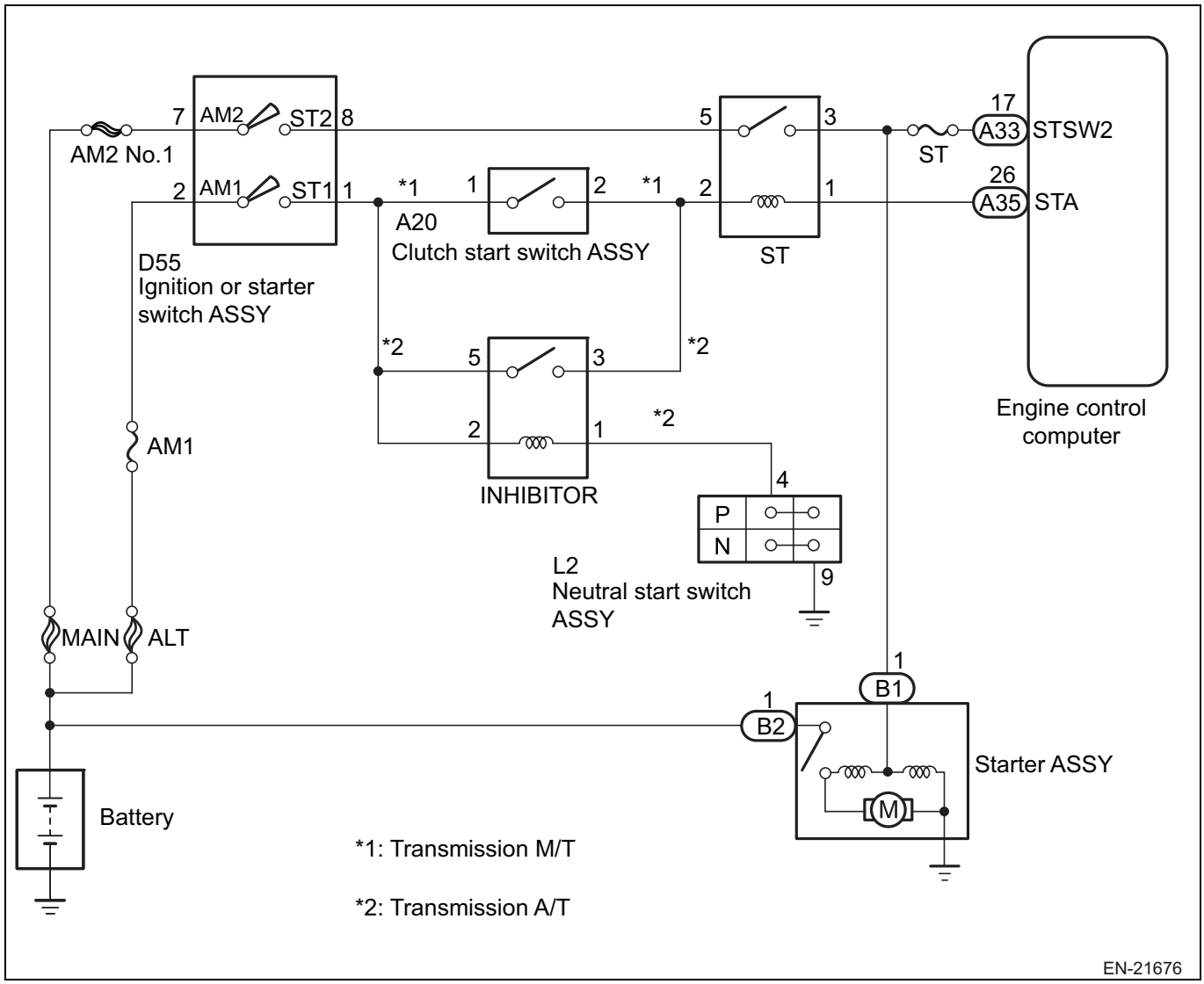

Inspection steps

CAUTION:

Before performing troubleshooting, check the fuse for this circuit.

1	Check if engine is cranked

(1) Operate the ignition switch to check if the engine is cranked or not.

Result

Result	Go to
Engine is not cranked.	A
Engine is cranked.	B

B → Go to Step 16.

A

2	Reading of SSM4 data ([Starter Switch])

(1) Connect the SSM4 to the DLC3.

(2) Turn the ignition switch to ON.

(3) Turn on the SSM4.
(4) Select the following menu items using the SSM4. : [Each System] / [Engine Control System] / [Data monitor] / [Starter Switch]
(5) Read [Starter Switch] when the ignition switch is operated.

Criteria

Inspection conditions	Starter signal
IG ON	OFF
Cranking	ON

ES

NG → Go to Step 4.

OK

3	Check wiring harness and connector (engine control computer - ST relay - starter ASSY)

NOTE:
For the inspection procedure and precautions for wiring harnesses and connectors, refer to IN - 36.
(1) Disconnect the connector for the engine control computer.
(2) Disconnect the connector for starter ASSY.
(3) Remove the ST relay from the engine compartment relay block.
(4) Measure the resistance between the terminals. (For terminal arrangement, refer to ES - 36.)
CAUTION:
When using tester probes to take measurements at a relay holder, do not push them hard against the holder. Otherwise the holder could be damaged.

Resistance (open circuit check)

Inspection terminals	Inspection conditions	Standard value
B1-1 - A33-17 (STSW)	Always	Less than 1 Ω
B1-1 - 3 (ST relay holder)	Always	Less than 1 Ω

Resistance (short circuit check)

Inspection terminals	Inspection conditions	Standard value
A33-17 (STSW), 3 (ST relay holder), and B1-1 - other terminals and chassis ground	Always	10 k Ωor more

NG → Repair or replacement of wiring harness or connector

OK

4	Perform a unit inspection of ignition OR starter switch ASSY

(1) Check the ignition OR starter switch ASSY as a single part. (Refer to ST - 46)

NG → Replacement of ignition or starter switch ASSY (Refer to ST - 45)

OK

5	Check wiring harness and connector (ignition OR starter switch ASSY - ST relay)

NOTE:
For the inspection procedure and precautions for wiring harnesses and connectors, refer to IN - 36.

(1) Disconnect the connector for the ignition OR starter switch ASSY.
(2) Remove the ST relay from the engine compartment relay block.
(3) Measure the resistance between the terminals.
CAUTION:
When using tester probes to take measurements at a relay holder, do not push them hard against the holder. Otherwise the holder could be damaged.

Resistance (open circuit check)

Inspection terminals	Inspection conditions	Standard value
D55-8 (ST2) - 5 (ST relay holder)	Always	Less than 1 Ω

Resistance (short circuit check)

Inspection terminals	Inspection conditions	Standard value
D55-8 (ST2) and 5 (ST relay holder) - other terminals and chassis ground	Always	10 k Ωor more

NG → Repair or replacement of wiring harness or connector

OK

6	Check power supply voltage (ignition OR starter switch ASSY)

NOTE:
For the inspection procedure and precautions for wiring harnesses and connectors, refer to IN - 36.

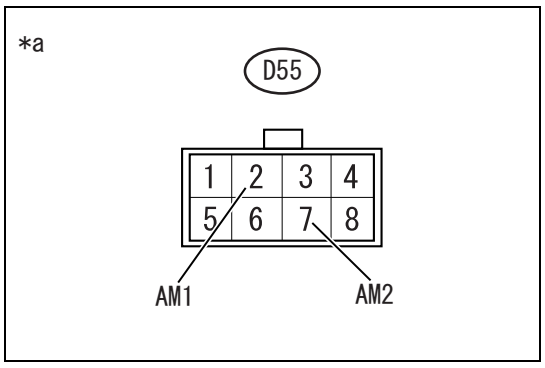

(1) Disconnect the connector for the ignition OR starter switch ASSY.
(2) Measure the voltage between the terminals.

Voltage

Inspection terminals	Inspection conditions	Standard value
D55-2 (AM1) - chassis ground	Always	11 to 14 V
D55-7 (AM2) - chassis ground	Always	11 to 14 V

Captions in illustration

*a	Front side of vehicle wiring harness connector (ignition OR starter switch ASSY)

Result

Result	Go to
Malfunction	A
Normal (Transmission A/T)	B
Normal (Transmission M/T)	C

B → Go to Step 7.

C → Go to Step 12.

A

Repair or replacement of wiring harness or connector

7	Perform a unit inspection of neutral start switch ASSY

(1) Check the neutral start switch ASSY as a single part. (Refer to AT - 190)

NG → Replacement of neutral start switch ASSY (Refer to AT - 186)

OK

8	Check wiring harness and connector (neutral start switch ASSY - INHIBITOR relay)

NOTE:
For the inspection procedure and precautions for wiring harnesses and connectors, refer to IN - 36.

(1) Disconnect the connector for neutral start switch ASSY.
(2) Remove the INHIBITOR relay from the engine compartment relay block.
(3) Measure the resistance between the terminals.
CAUTION:
When using tester probes to take measurements at a relay holder, do not push them hard against the holder. Otherwise the holder could be damaged.

Resistance (open circuit check)

Inspection terminals	Inspection conditions	Standard value
L2-4-1 (INHIBITOR relay holder)	Always	Less than 1 Ω
L2-9 - chassis ground	Always	Less than 1 Ω

Resistance (short circuit check)

Inspection terminals	Inspection conditions	Standard value
L2-4 and 1 (INHIBITOR relay holder) - other terminals and chassis ground	Always	10 k Ωor more

NG → Repair or replacement of wiring harness or connector

OK

9	Check wiring harness and connector (ignition OR starter switch ASSY - INHIBITOR relay)

NOTE:
For the inspection procedure and precautions for wiring harnesses and connectors, refer to IN - 36.

(1) Disconnect the connector for the ignition OR starter switch ASSY.
(2) Remove the INHIBITOR relay from the engine compartment relay block.
(3) Measure the resistance between the terminals.

CAUTION:
When using tester probes to take measurements at a relay holder, do not push them hard against the holder. Otherwise the holder could be damaged.

Resistance (open circuit check)

Inspection terminals	Inspection conditions	Standard value
D55-1 (ST1) - 5 (INHIBITOR relay holder)	Always	Less than 1 Ω
D55-1 (ST1) - 2 (INHIBITOR relay holder)	Always	Less than 1 Ω

Resistance (short circuit check)

Inspection terminals	Inspection conditions	Standard value
D55-1 (ST1), 2 (INHIBITOR relay holder) and 5 (INHIBITOR relay holder) - other terminals and chassis ground	Always	10 k Ωor more

NG → Repair or replacement of wiring harness or connector

OK

10	Check wiring harness and connector (INHIBITOR relay - ST relay)

NOTE:
For the inspection procedure and precautions for wiring harnesses and connectors, refer to IN - 36.

(1) Remove the INHIBITOR relay and ST relay from the engine compartment relay block.
(2) Measure the resistance between the terminals.
CAUTION:
When using tester probes to take measurements at a relay holder, do not push them hard against the holder. Otherwise the holder could be damaged.

Resistance (open circuit check)

Inspection terminals	Inspection conditions	Standard value
3 (INHIBITOR relay holder) - 2 (ST relay holder)	Always	Less than 1 Ω

Resistance (short circuit check)

Inspection terminals	Inspection conditions	Standard value
3 (INHIBITOR relay holder) and 2 (ST relay holder) - other terminals and chassis ground	Always	10 k Ωor more

NG → Repair or replacement of wiring harness or connector

OK

11	Check wiring harness and connector (engine control computer - ST relay)

NOTE:
For the inspection procedure and precautions for wiring harnesses and connectors, refer to IN - 36.

(1) Disconnect the connector for the engine control computer.
(2) Remove the ST relay from the engine compartment relay block.
(3) Measure the resistance between the terminals. (For terminal arrangement, refer to ES - 36.)

CAUTION:
When using tester probes to take measurements at a relay holder, do not push them hard against the holder. Otherwise the holder could be damaged.

Resistance (open circuit check)

Inspection terminals	Inspection conditions	Standard value
A35-26 (STA) - 1 (ST relay holder)	Always	Less than 1 Ω
A33-17 (STSW) - 3 (ST relay holder)	Always	Less than 1 Ω

ES

Resistance (short circuit check)

Inspection terminals	Inspection conditions	Standard value
A35-26 (STA), A33-17 (STSW), 1 (ST relay holder), and 3 (ST relay holder) - other terminals and chassis ground	Always	10 k Ωor more

NG → Repair or replacement of wiring harness or connector

OK

Go to related circuit inspection listed in symptom table (Refer to ES - 16).

12	Perform a unit inspection of clutch start switch ASSY

(1) Check the clutch start switch ASSY as a single part. (Refer to CL - 30)

NG → Replacement of clutch start switch ASSY (Refer to CL - 28)

OK

13	Check wiring harness and connector (ignition OR starter switch ASSY - clutch start switch ASSY)

NOTE:
For the inspection procedure and precautions for wiring harnesses and connectors, refer to IN - 36.
(1) Disconnect the connector for the ignition OR starter switch ASSY.
(2) Disconnect the connector for clutch start switch ASSY.
(3) Measure the resistance between the terminals.

Resistance (open circuit check)

Inspection terminals	Inspection conditions	Standard value
D55-1 (ST1) - A20-1	Always	Less than 1 Ω

Resistance (short circuit check)

Inspection terminals	Inspection conditions	Standard value
D55-1 (ST1) and A20-1 - other terminals and chassis ground	Always	10 k Ωor more

NG → Repair or replacement of wiring harness or connector

OK

14	Check wiring harness and connector (clutch start switch ASSY - ST relay)

NOTE:
For the inspection procedure and precautions for wiring harnesses and connectors, refer to IN - 36.

(1) Disconnect the clutch start switch ASSY connector.
(2) Remove the ST relay from the engine compartment relay block.
(3) Measure the resistance between the terminals.
CAUTION:
When using tester probes to take measurements at a relay holder, do not push them hard against the holder. Otherwise the holder could be damaged.

Resistance (open circuit check)

Inspection terminals	Inspection conditions	Standard value
A20-2 - 2 (ST relay holder)	Always	Less than 1 Ω

Resistance (short circuit check)

Inspection terminals	Inspection conditions	Standard value
A20-2 and 2 (ST relay holder) - other terminals and chassis ground	Always	10 k Ωor more

NG → Repair or replacement of wiring harness or connector

OK

15	Check wiring harness and connector (engine control computer - ST relay)

NOTE:
For the inspection procedure and precautions for wiring harnesses and connectors, refer to IN - 36.

(1) Disconnect the connector for the engine control computer.
(2) Remove the ST relay from the engine compartment relay block.
(3) Measure the resistance between the terminals. (For terminal arrangement, refer to ES - 36.)
CAUTION:
When using tester probes to take measurements at a relay holder, do not push them hard against the holder. Otherwise the holder could be damaged.

Resistance (open circuit check)

Inspection terminals	Inspection conditions	Standard value
A35-26 (STA) - 1 (ST relay holder)	Always	Less than 1 Ω
A33-17 (STSW) - 3 (ST relay holder)	Always	Less than 1 Ω

Resistance (short circuit check)

Inspection terminals	Inspection conditions	Standard value
A35-26 (STA), A33-17 (STSW), 1 (ST relay holder), and 3 (ST relay holder) - other terminals and chassis ground	Always	10 k Ωor more

NG → Repair or replacement of wiring harness or connector

OK

Go to related circuit inspection listed in symptom table (Refer to ES - 16).

16	Reading of SSM4 data ([Starter Switch])

(1) Connect the SSM4 to the DLC3.
(2) Turn the ignition switch to ON.
(3) Turn on the SSM4.
(4) Select the following menu items using the SSM4. : [Each System] / [Engine Control System] / [Data monitor] / [Starter Switch]
(5) Read [Starter Switch] when the ignition switch is operated.

ES

Criteria

Inspection conditions	Starter signal
IG ON	OFF
Cranking	ON

Result

Result	Go to
Malfunction	A
Normal	B

B → Go to related circuit inspection listed in symptom table (Refer to ES - 16).

A

17	Check wiring harness and connector (engine control computer - ST relay)

NOTE:
For the inspection procedure and precautions for wiring harnesses and connectors, refer to IN - 36.
(1) Disconnect the connector for the engine control computer.
(2) Remove the ST relay from the engine compartment relay block.
(3) Measure the resistance between the terminals. (For terminal arrangement, refer to ES - 36.)
CAUTION:
When using tester probes to take measurements at a relay holder, do not push them hard against the holder. Otherwise the holder could be damaged.

Resistance (open circuit check)

Inspection terminals	Inspection conditions	Standard value
A33-17 (STSW) - 3 (ST relay holder)	Always	Less than 1 Ω

Resistance (short circuit check)

Inspection terminals	Inspection conditions	Standard value
A33-17 (STSW) and 3 (ST relay holder) - other terminals and chassis ground	Always	10 k Ωor more

NG → Repair or replacement of wiring harness or connector

OK

Replacement of the engine control computer (Refer to ES - 670)

Brake override system

Circuit description

The brake override system suppresses the driving torque when the brake pedal is depressed with the accelerator pedal depressed while driving. The following describes the control operation condition and the control content.

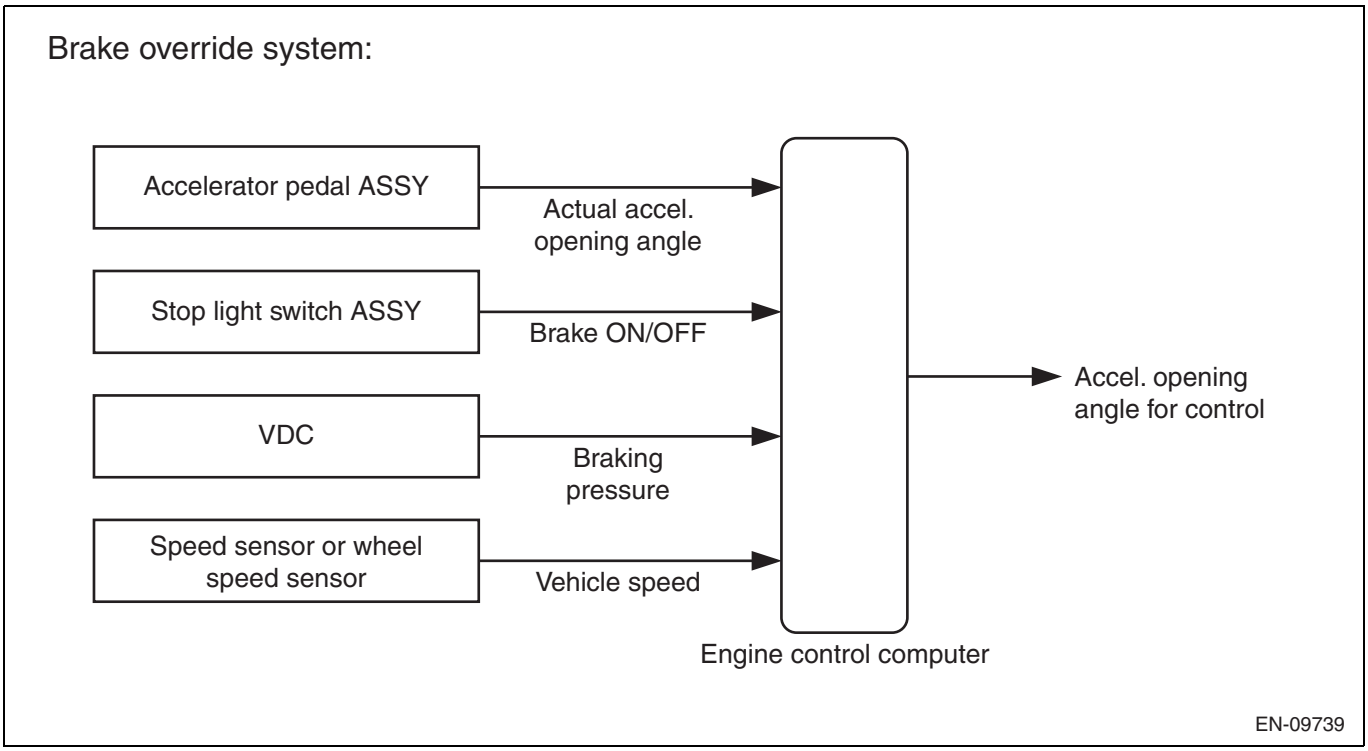

Control operation condition

– When the vehicle speed exceeds a certain threshold.
– When both accelerator pedal and brake pedal are depressed.
  CAUTION:
  Depending on the relation of the accelerator pedal opening angle and speed, the control operation may not start.

Control content

– Driving torque suppression
  NOTE:
  When this control is established, the accelerator pedal opening angle used for the engine control is forcibly dropped to the constant value. For this reason, the accelerator pedal opening angle in the data monitor is rewritten into constant value regardless of actual accelerator pedal opening angle (accelerator sensor No. 1 voltage ratio).

Restoring condition

– When the stop light switch is turned to OFF or the accelerator opening angle returns by a specified amount or more.

Inspection steps

Drive the vehicle approx. at 10 km/h {6.25 MPH}, and depress the accelerator pedal ASSY by half or by 3/4 of the way.

While holding the depressed accelerator pedal ASSY, depress the brake pedal with your left foot. When the engine speed drops approx. to 1000 r/min at this time, it is possible to determine that the control operates normally.

WARNING:

Perform this test in the place where a drive check can be done safely, and pay special attention to the circumstance of the vehicle. Observe the traffic law such as legal speed limit when driving.

NOTE:

- Normally, the value for the accelerator pedal opening angle in the data monitor changes according to the value for the accelerator sensor No. 1 voltage ratio. (Values are not the same. Refer to ES - 43)
- When the value for the accelerator sensor No. 1 voltage ratio is constant, it is possible to determine that the control operates even if the accelerator pedal opening angle and the accelerator sensor No. 1 voltage ratio in the data monitor differ from each other and the value for the accelerator pedal opening is fluctuating as well. (Using the data storage function of the SSM4, the data obtained during driving can be recorded. The recorded data can be checked after driving.)

- If a concern arises from a customer that the vehicle decelerates when he/she intentionally depresses the accelerator pedal and brake pedal simultaneously, ask the customer not to depress both pedals at the same time. (Example: While operating the accelerator pedal, operate the brake pedal with left foot.)

1	Read DTC

(1) Connect the SSM4 to the DLC3.
(2) Turn the ignition switch to ON.
(3) Select the following menu items using the SSM4. : [Each System] / [Engine Control System] / [DTC]
(4) Check the DTC for the system that has been output.

ES

Result

Result	Go to
No DTC is output	A
DTC is output.	B

B → To corresponding DTC chart

A

2	Reading of SSM4 data ([Stop Light Switch])

(1) Connect the SSM4 to the DLC3.
(2) Turn the ignition switch to ON.
(3) Turn on the SSM4.
(4) Select the following menu items using the SSM4. : [Each System] / [Engine Control System] / [Data monitor] / [Stop Light Switch]
(5) Read the data display.

Item name	Inspection conditions	Criteria
[Stop Light Switch]	Brake pedal is depressed.	ON
	Brake pedal is released.	OFF

NG → Stop light circuit check (Refer to LE - 10)

OK

3	Check brake pedal support ASSY

(1) Check and adjust the brake pedal. (Refer to BR - 18)
NOTE:
When ON operation of the stop light switch ASSY is delayed, the control is also delayed. If the switch is turned on earlier, the operation starts accordingly at an early point. Therefore, check the brake pedal and stop light switch ASSY.

NG → Check and replacement of brake pedal support ASSY

OK

4	Reading of SSM4 data (Accelerator Pedal Pos.#1, Accelerator Pedal Pos.#2)

(1) Connect the SSM4 to the DLC3.

(2) Turn the ignition switch to ON.
(3) Turn on the SSM4.
(4) Check DTC using SSM4.
(5) Read the data display.

Criteria

Inspection conditions	Criteria
Accelerator pedal is fully closed →fully open.	Changes continuously.

NOTE:
Refer to ES - 43for normal value of [Accelerator Pedal Pos.#1] and [Accelerator Pedal Pos.#2] when the accelerator pedal is operated.

ES

NG → Replacement of accelerator pedal sensor ASSY (Refer to ES - 673)

OK

5	Reading of SSM4 data ([Vehicle Speed])

(1) Connect the SSM4 to the DLC3.
(2) Turn the ignition switch to ON.
(3) Turn on the SSM4.
(4) Start the engine.
(5) Select the following menu items using the SSM4. : [Each System] / [Engine Control System] / [Data monitor] / [Vehicle Speed]

Criteria

Inspection conditions	Criteria
Vehicle is parked.	0 km/h {0 MPH}
Vehicle is running at a constant speed. (16.1 to 64.4 km/h) {10 to 40 MPH}	Significant fluctuation is not observed in the displayed speed.

WARNING:
When performing the driving test, always observe the applicable traffic laws such as the speed limit.
NOTE:
Using the data storage function of the SSM4, the data obtained during driving can be recorded. The recorded data can be checked after driving.

NG → Go to meter & gauge system (Refer to ME - 39)

OK

Complete

MIL circuit

Circuit description
The MIL is used for displaying the vehicle malfunction detected by the engine control computer. When the ignition switch is turned to ON, the MIL circuit is supplied with power, and the MIL illuminates. Operation of the MIL can be visually checked. When the ignition switch is turned to ON, the MIL illuminates. After engine has started, it goes off. When the MIL remains lit or unlit, perform the following troubleshooting.

Circuit figure

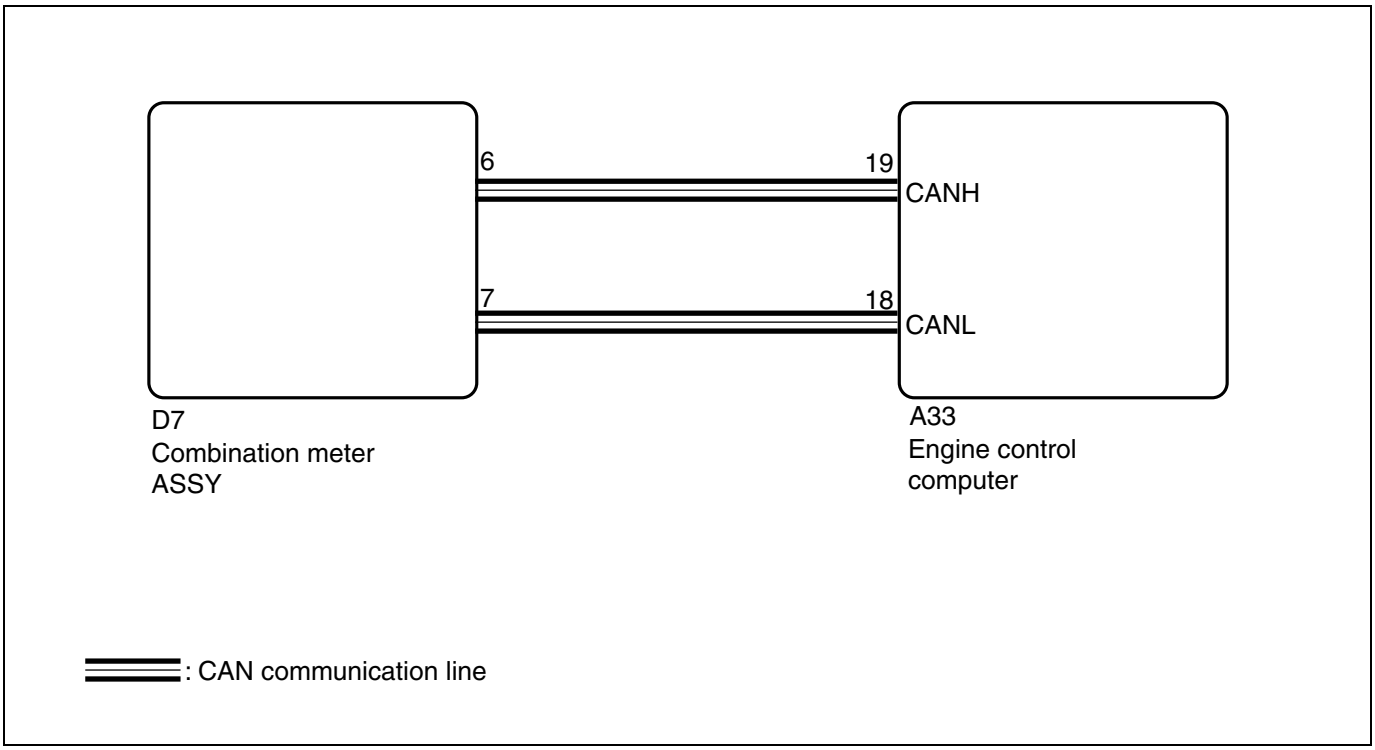

ES

Inspection steps

1	MIL illumination check

(1) Check the illumination status of MIL.

Result

MIL	Inspection conditions	Go to
Always lit.	IG ON →After engine start	A
Always unlit.	IG ON →After engine start	B
ON →OFF	IG ON →After engine start	C

B → Go to Step 3.

C → Inspection for problems that do not normally occur (Refer to IN - 32)

A

2	Read DTC

(1) Connect the SSM4 to the DLC3.
(2) Turn the ignition switch to ON.
(3) Follow the SSM4 on-screen instructions to check the DTC. (Refer to ES - 28)

Result

Result	Go to
No DTC is output	A
DTC is output.	B

B → To corresponding DTC chart (refer to ES - 12)

A

Go to meter & gauge system (Refer to ME - 19)

3	Engine starting inspection

(1) Check that the engine starts.
Criteria: The engine starts.

NG → Go to VC power supply circuit inspection (Refer to ES - 636)

OK

Replacement of the combination meter ASSY (Refer to ME - 63)

Fuel injector circuit

Circuit description

The fuel injector ASSY (port injection side) is mounted to the intake manifold. Based on the signal transmitted from the engine control computer, the fuel injector ASSY (port injection side) injects the fuel into the intake manifold ASSY.

Circuit figure

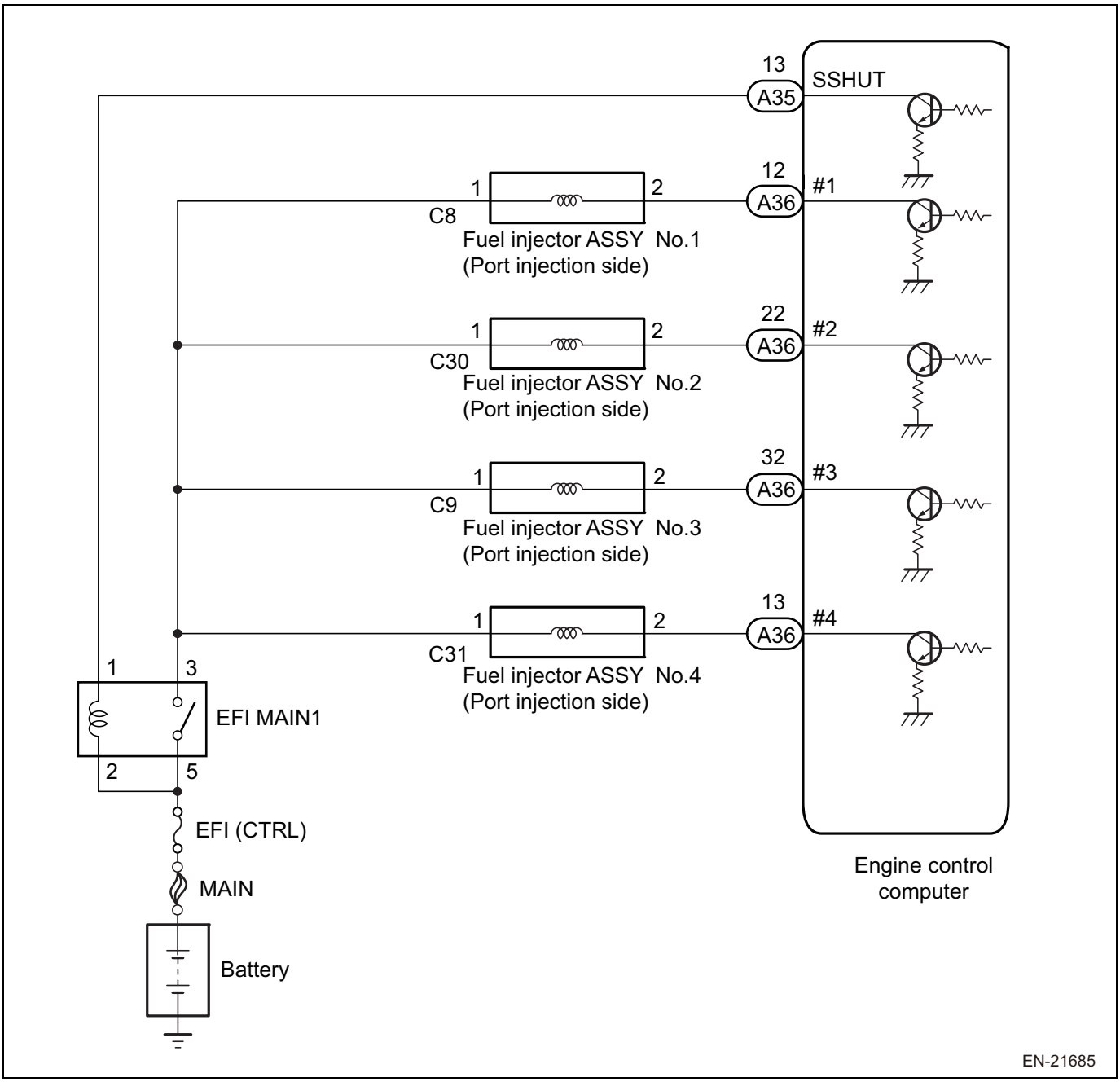

Inspection steps

CAUTION:

Before performing troubleshooting, check the fuse for this circuit.

1	Check wiring harness and connector (fuel injector ASSY (port injection side) power supply circuit)

NOTE:

For the inspection procedure and precautions for wiring harnesses and connectors, refer to IN - 36.

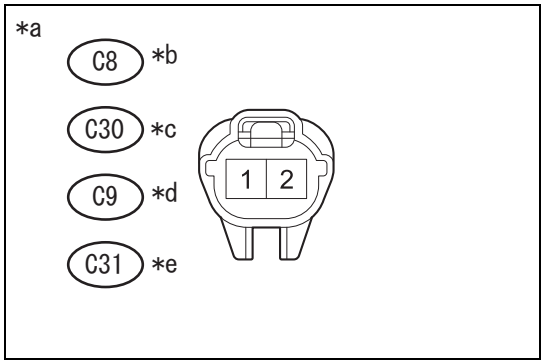

(1) Disconnect all connectors for fuel injector ASSY (port injection side).
(2) Turn the ignition switch to ON.
(3) Measure the voltage between the terminals.

Voltage

Inspection terminals	Inspection conditions	Standard value
C8-1 - chassis ground	IG ON	11 to 14 V
C30-1 - chassis ground	IG ON	11 to 14 V
C9-1 - chassis ground	IG ON	11 to 14 V
C31-1 - chassis ground	IG ON	11 to 14 V

Captions in illustration

*a	Front side of vehicle wiring harness connector (fuel injector ASSY connector)
*b	No. 1 cylinder
*c	No. 2 cylinder
*d	No. 3 cylinder
*e	No. 4 cylinder

NG → Go to Step 4.

OK

2	Perform a unit inspection of fuel injector ASSY

Perform a unit inspection on the fuel injector ASSY (port injection side). (Refer to FU - 29)

NG → Replace fuel injector ASSY (Refer to FU - 21)

OK

3	Check wiring harness and connector (fuel injector ASSY (port injection side) - engine control computer)

NOTE:
For the inspection procedure and precautions for wiring harnesses and connectors, refer to IN - 36.
(1) Disconnect the connector for fuel injector ASSY (port injection side).
(2) Disconnect the connector for the engine control computer.
(3) Measure the resistance between the terminals. (For terminal arrangement, refer to ES - 36.)

Resistance (open circuit check)

Inspection terminals	Inspection conditions	Standard value
A36-12(#1) - C8-2	Always	Less than 1 Ω
A36-22(#2) - C30-2	Always	Less than 1 Ω
A36-32(#3) - C9-2	Always	Less than 1 Ω
A36-13(#4) - C31-2	Always	Less than 1 Ω

Resistance (short circuit check)

Inspection terminals	Inspection conditions	Standard value
A36-12 (#1) and C8-2 - other terminals and chassis ground	Always	10 k Ωor more

Inspection terminals	Inspection conditions	Standard value
A36-22 (#2) and C30-2 - other terminals and chassis ground	Always	10 k Ωor more
A36-32 (#3) and C9-2 - other terminals and chassis ground	Always	10 k Ωor more
A36-13 (#4) and C31-2 - other terminals and chassis ground	Always	10 k Ωor more

NG → Repair or replacement of wiring harness or connector

ES

OK

Replacement of the engine control computer (Refer to ES - 670)

4	Check wiring harness and connector (fuel injector ASSY - EFI MAIN1 relay)

NOTE:
For the inspection procedure and precautions for wiring harnesses and connectors, refer to IN - 36.

(1) Disconnect the connector for fuel injector ASSY (port injection side).
(2) Remove the EFI MAIN1 relay from the engine compartment relay block.
(3) Measure the resistance between the terminals.
CAUTION:
When using tester probes to take measurements at a relay holder, do not push them hard against the holder. Otherwise the holder could be damaged.

Resistance (open circuit check)

Inspection terminals	Inspection conditions	Standard value
C8-1 - 3 (EFI MAIN1 relay holder)	Always	Less than 1 Ω
C30-1 - 3 (EFI MAIN1 relay holder)	Always	Less than 1 Ω
C9-1 - 3 (EFI MAIN1 relay holder)	Always	Less than 1 Ω
C31-1 - 3 (EFI MAIN1 relay holder)	Always	Less than 1 Ω

Resistance (short circuit check)

Inspection terminals	Inspection conditions	Standard value
C8-1, C30-1, C9-1, C31-1 or 3 (EFI MAIN1 relay holder) - other terminals and chassis ground	Always	10 k Ωor more

NG → Repair or replacement of wiring harness or connector

OK

Inspection of the ECM power supply system (Refer to ES - 642)

VC power supply circuit

Circuit description
The engine control computer constantly produces 5 V from the battery voltage applied to +B terminal and +B2 terminal to operate the CPU. In addition, the engine control computer supplies this power to the sensor via VC output circuit.

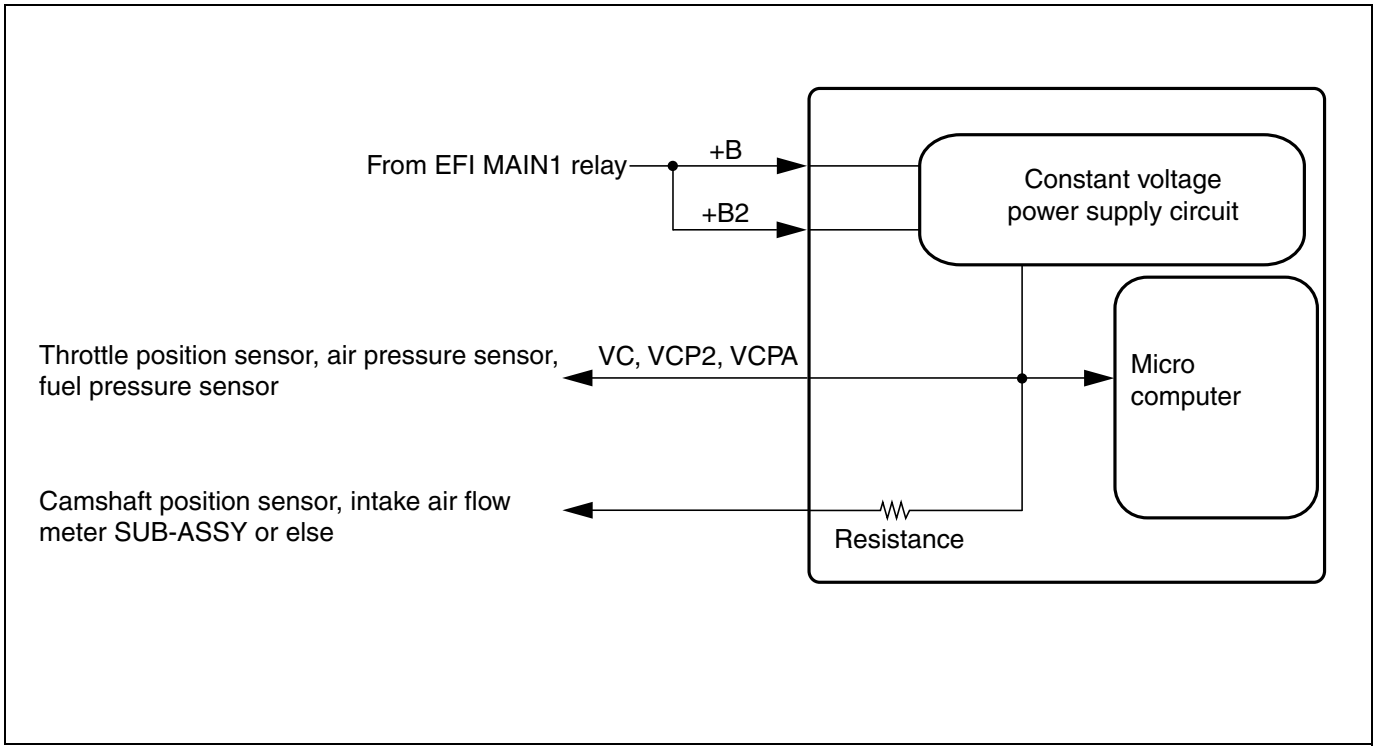

When the VC circuit is shorted, the power is not supplied from the VC circuit. Because of this, the CPU in the engine control computer and the sensors supplied from the VC circuit are de-energized. In this state, the system is not started, and the MIL does not illuminate even if the system malfunction occurs.

NOTE:

Normally, when the ignition switch is turned to ON for the first time, the MIL illuminates. When the engine has started, the MIL goes off.

Circuit figure

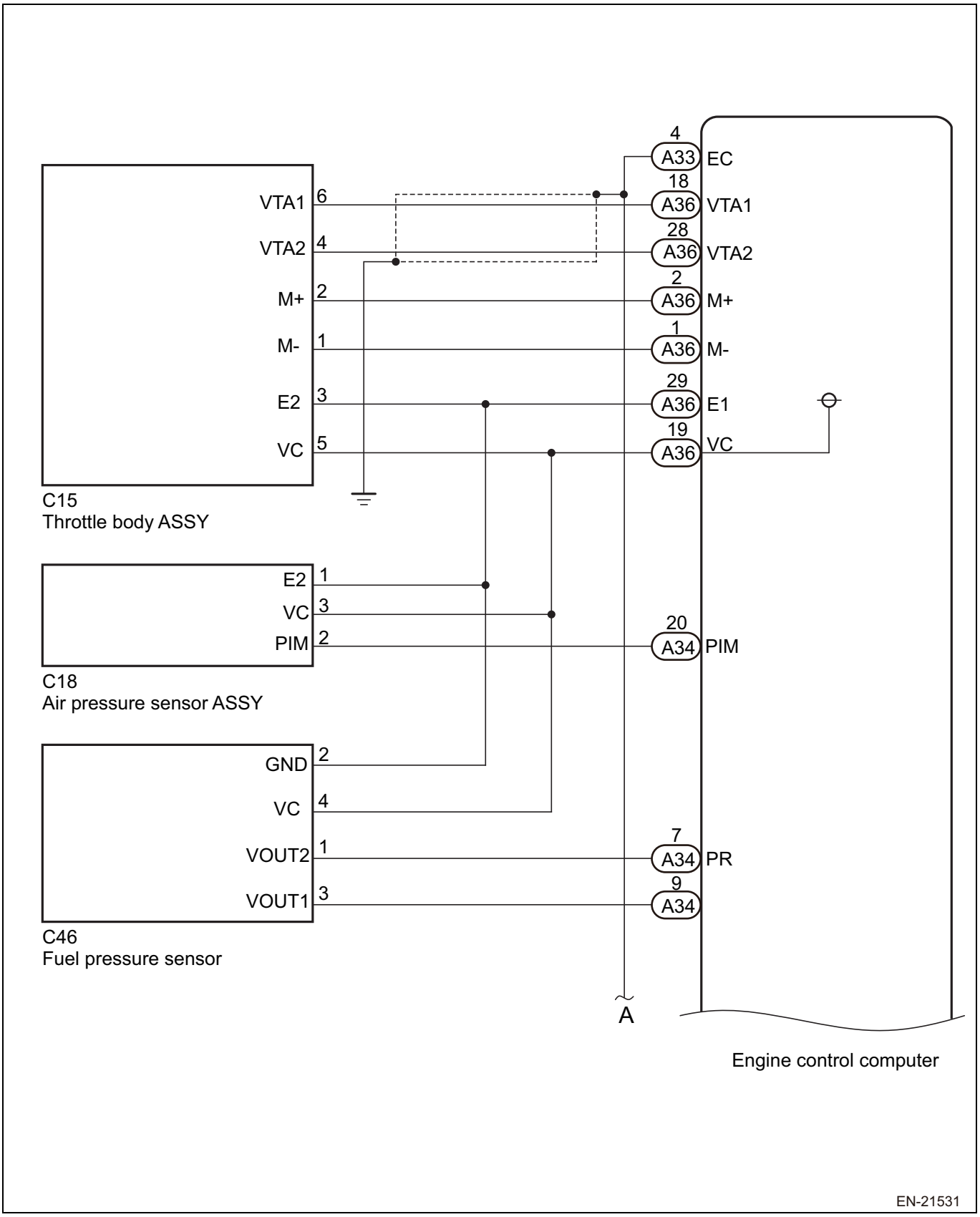

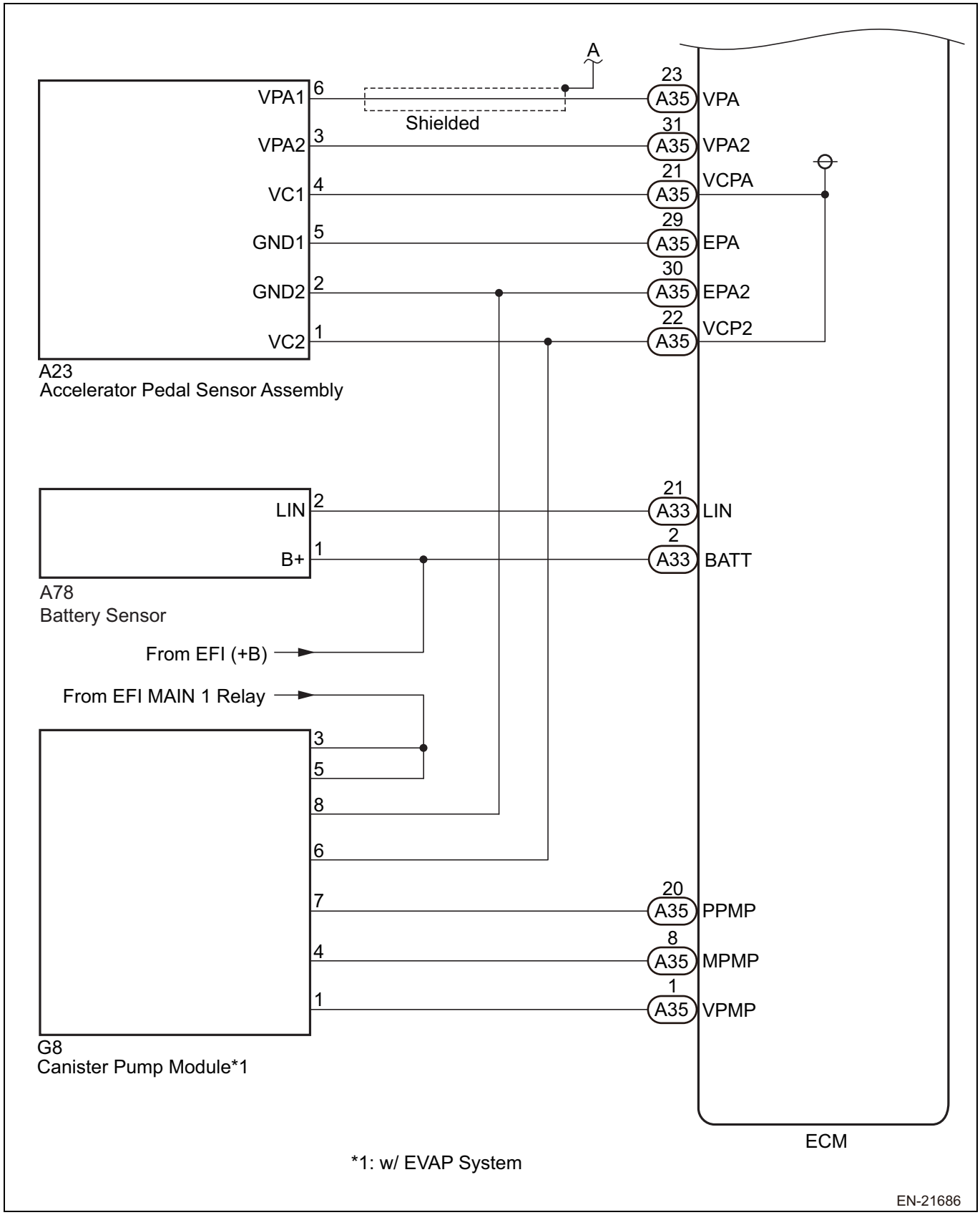
A
VPA1
6
VPA2
3
VC1
4
GND1
5
GND2
2
VC2
1
Shielded
23
A35
VPA
31
A35
VPA2
21
A35
VCPA
29
A35
EPA
30
A35
EPA2
22
A35
VCP2
A23
Accelerator Pedal Sensor Assembly
LIN
2
B+
1
21
A33
LIN
2
A33
BATT
A78
Battery Sensor
From EFI (+B)
From EFI MAIN 1 Relay
3
5
8
6
7
4
1
20
A35
PPMP
8
A35
MPMP
1
A35
VPMP
G8
Canister Pump Module*1
ECM
*1: w/ EVAP System
EN-21686

Inspection steps

1	MIL illumination check

(1) Turn the ignition switch to ON.
(2) Check that the MIL illuminates in the combination meter ASSY.

Result

Result	Go to
Does not illuminate	A
Illuminates	B

ES

B → Go to related circuit inspection listed in symptom table (Refer to ES - 16).

A

2	Reading of SSM4 data

(1) Connect the SSM4 to the DLC3.
(2) Turn the ignition switch to ON.
(3) Check that the communication between SSM4 and engine control computer can be executed normally.

NOTE:
[Data monitor] for engine can be checked.

Result

Result	Go to
Communication not detected.	A
Communication detected.	B

B → Go to MIL circuit inspection (Refer to ES - 631)

A

3	Check throttle body ASSY (with motor) (short-circuit inspection)

(1) Disconnect the connector for throttle body ASSY.
(2) Turn the ignition switch to ON.
(3) Check the MIL in the combination meter ASSY.

Result

Result	Go to
Does not illuminate	A
Illuminates	B

B → Replacement of throttle body ASSY (with motor) (Refer to ES - 666)

A

4	Check air pressure sensor ASSY (short-circuit inspection)

(1) Disconnect the connector for air pressure sensor ASSY.
(2) Turn the ignition switch to ON.

(3) Check the MIL in the combination meter ASSY.

Result

Result	Go to
Does not illuminate	A
Illuminates	B

B → Replacement of air pressure sensor ASSY (Refer to ES - 704)

A

ES

5	Check fuel pressure sensor (short-circuit inspection)

(1) Disconnect the connector for the fuel pressure sensor.
(2) Turn the ignition switch to ON.
(3) Check the MIL in the combination meter ASSY.

Result

Result	Go to
Does not illuminate	A
Illuminates	B

B → Replacement of the fuel pressure sensor (Refer to FU - 41)

A

6	Check accelerator pedal sensor ASSY (short-circuit inspection)

(1) Disconnect the connector for accelerator pedal sensor ASSY.
(2) Turn the ignition switch to ON.
(3) Check the MIL in the combination meter ASSY.

Result

Result	Go to
Does not illuminate	A
Illuminates	B

B → Replacement of accelerator pedal sensor ASSY (Refer to ES - 673)

A

7	Check battery current sensor (short-circuit inspection)

(1) Disconnect the connector for battery current sensor.
(2) Turn the ignition switch to ON.
(3) Check the MIL in the combination meter ASSY.

Result

Result	Go to
Does not illuminate	A
Illuminates	B

B → Replacement of battery current sensor (Refer to PD - 20)

A

8	Check canister pump module (short-circuit inspection)

(1) Disconnect the connector for canister pump module.
(2) Turn the ignition switch to ON.
(3) Check the MIL in the combination meter ASSY.

Result

ES

Result	Go to
Does not illuminate	A
Illuminates	B

B → Replacement of canister pump module

A

9	Check wiring harness and connector (short-circuit inspection)

NOTE:
For the inspection procedure and precautions for wiring harnesses and connectors, refer to IN - 36.
(1) Disconnect the connector for throttle body ASSY.
(2) Disconnect the connector for air pressure sensor ASSY.
(3) Disconnect the connector for the fuel pressure sensor.
(4) Disconnect the connector for accelerator pedal sensor ASSY.
(5) Disconnect the connector for battery current sensor.
(6) Disconnect the connector for the engine control computer.
(7) Measure the resistance between the terminals. (For terminal arrangement, refer to ES - 36.)

Resistance

Inspection terminals	Inspection conditions	Standard value
A36-19 (VC) - chassis ground	Always	10 k Ωor more
A35-22 (VCP2) - chassis ground	Always	10 k Ωor more
A35-21 (VCPA) - chassis ground	Always	10 k Ωor more

NG → Repair or replacement of wiring harness or connector

OK

Replacement of the engine control computer (Refer to ES - 670)

ECM power supply system

Circuit description

When the ignition switch is turned to ON, IGSW signal is input into the engine control computer. As a result, the internal transistor is turned on, an electric current flows through the coil of EFI MAIN1 relay to close the relay contact, and then the power is supplied to +B and +B2 terminals of the engine control computer.

Circuit figure

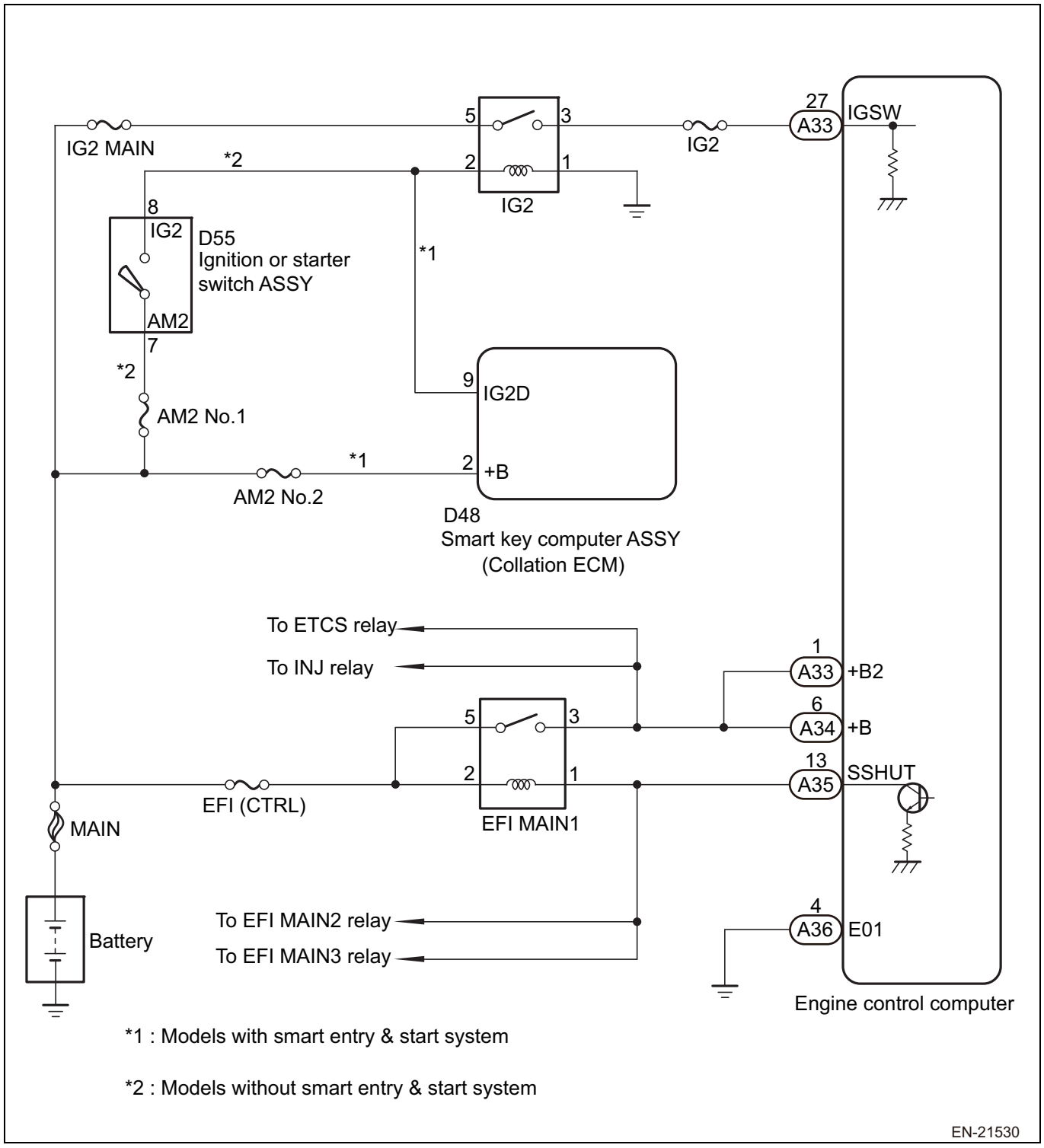

Inspection steps

CAUTION:

Before performing troubleshooting, check the fuse for this circuit.

1	Check engine control computer (inspection of +B and +B2 voltages)

NOTE:

For the inspection procedure and precautions for wiring harnesses and connectors, refer to IN - 36.

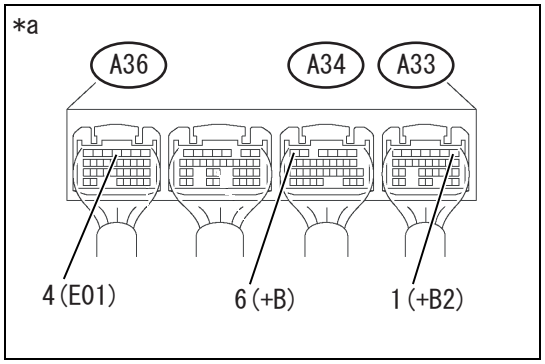

(1) Turn the ignition switch to ON.
(2) Measure the voltage between the terminals. (For terminal arrangement, refer to ES - 36.)

Voltage

Inspection terminals	Inspection conditions	Standard value
A34-6(+B) - A36-4(E01)	IG ON	12 to 14 V
A33-1(+B2) - A36-4(E01)	IG ON	12 to 14 V

Captions in illustration

*a	Connector connected (engine control computer)

NG → Go to Step 4.

OK

2	Check wiring harness and connector (engine control computer - chassis ground)

NOTE:
Refer to IN - 36for inspection procedure and precautions of wiring harness and connector.

(1) Disconnect the connector for the engine control computer.
(2) Measure the resistance between the terminals. (For terminal arrangement, refer to ES - 36.)

Resistance (open circuit check)

Inspection terminals	Inspection conditions	Criteria
A36-4 (E01) - chassis ground	Always	Less than 1 Ω

(3) Connect the connector for engine control computer.

NG → Repair or replacement of wiring harness or connector

OK

3	Check engine control computer (IGSW voltage)

NOTE:
Refer to IN - 36for inspection procedure and precautions of wiring harness and connector.

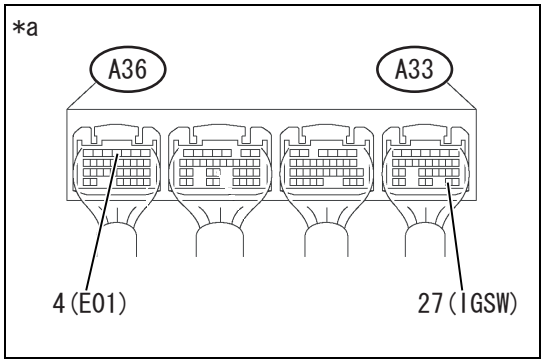

(1) Turn the ignition switch to ON.
(2) Measure the voltage between the terminals. (For terminal arrangement, refer to ES - 36.)

Voltage

Inspection terminals	Inspection conditions	Standard value
A33-27(IGSW) - A36-4(E01)	IG ON	10 to 13 V

Captions in illustration

*a	Connector connected (engine control computer)

NG → Go to Step 8.

OK

Replacement of the engine control computer (Refer to ES - 670)

4	Check engine control computer (SSHUT voltage)

NOTE:
For the inspection procedure and precautions for wiring harnesses and connectors, refer to IN - 36.

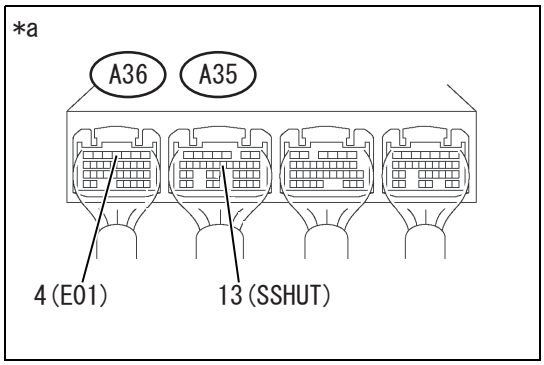

(1) Turn the ignition switch to ON.
(2) Measure the voltage between the terminals. (For terminal arrangement, refer to ES - 36.)

Voltage

Inspection terminals	Inspection conditions	Standard value
A35-13(SSHUT) - A36-4(E01)	IG ON	Approx. 0 V

Captions in illustration

*a	Connector connected (engine control computer)

NG → Repair or replacement of wiring harness or connector

OK

5	Relay unit inspection (EFI MAIN1 relay)

(1) Perform unit inspection of EFI MAIN1 relay. (Refer to ES - 713)

NG → Relay replacement (EFI MAIN1 relay)

OK

6	Check wiring harness and connector (EFI MAIN1 relay - engine control computer)

NOTE:
Refer to IN - 36for inspection procedure and precautions of wiring harness and connector.

(1) Remove the EFI MAIN1 relay from the engine compartment relay block.
(2) Disconnect the connector for the engine control computer.
(3) Measure the resistance between the terminals. (For terminal arrangement, refer to ES - 36.)
CAUTION:
When using tester probes to take measurements at a relay holder, do not push them hard against the holder. Otherwise the holder could be damaged.

Resistance (open circuit check)

Inspection terminals	Inspection conditions	Standard value
1 (EFI MAIN1 relay holder) - A35-13 (SSHUT)	Always	Less than 1 Ω
3 (EFI MAIN1 relay holder) - A34-6 (+B)	Always	Less than 1 Ω
3 (EFI MAIN1 relay holder) - A33-1 (+B2)	Always	Less than 1 Ω

Resistance (short circuit check)

ES

Inspection terminals	Inspection conditions	Standard value
1 (EFI MAIN1 relay holder) and A35-13 (SSHUT) - other terminals and chassis ground	Always	10 k Ωor more
3 (EFI MAIN1 relay holder), A34-6 (+B) and A33-1 (+B2) - other terminals and chassis ground	Always	10 k Ωor more

NG → Repair or replacement of wiring harness or connector

OK

7	Check power supply voltage (EFI MAIN1 relay)

NOTE:
Refer to IN - 36for inspection procedure and precautions of wiring harness and connector.

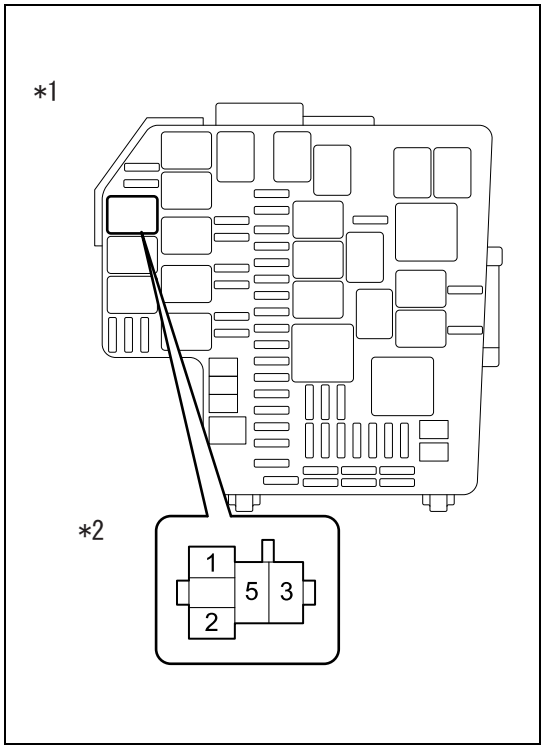

(1) Remove the EFI MAIN1 relay from the engine compartment relay block.
(2) Measure the voltage between the terminals.
CAUTION:
When using tester probes to take measurements at a relay holder, do not push them hard against the holder. Otherwise the holder could be damaged.

Voltage:

Inspection terminals	Inspection conditions	Standard value
2 (EFI MAIN1 relay holder) - chassis ground	Always	11 to 14 V
5 (EFI MAIN1 relay holder) - chassis ground	Always	11 to 14 V

Captions in illustration

*1	Engine compartment relay block
*2	EFI MAIN1 relay holder

NG → Repair or replacement of wiring harness or connector

OK

8	Check wiring harness and connector (IG2 relay - engine control computer)

NOTE:
For the inspection procedure and precautions for wiring harnesses and connectors, refer to IN - 36.

(1) Remove the IG2 relay from the engine compartment relay block.
(2) Disconnect the connector for the engine control computer.
(3) Measure the resistance between the terminals. (For terminal arrangement, refer to ES - 36.)
CAUTION:
When using tester probes to take measurements at a relay holder, do not push them hard against the holder. Otherwise the holder could be damaged.

ES

Resistance (open circuit check)

Inspection terminals	Inspection conditions	Standard value
3 (IG2 relay holder) - A33-27 (IGSW)	Always	Less than 1 Ω
1 (IG2 relay holder) - chassis ground	Always	Less than 1 Ω

Resistance (short circuit check)

Inspection terminals	Inspection conditions	Standard value
3 (IG2 relay holder) and A33-27 (IGSW) - other terminals and chassis ground	Always	10 k Ωor more

NG → Repair or replacement of wiring harness or connector

OK

9	Perform a unit inspection of relay (IG2 relay)

(1) Check IG2 relay as a single part. (Refer to ES - 713)

NG → Relay replacement (IG2 relay)

OK

10	Check power supply voltage (IG2 relay)

NOTE:
Refer to IN - 36for inspection procedure and precautions of wiring harness and connector.

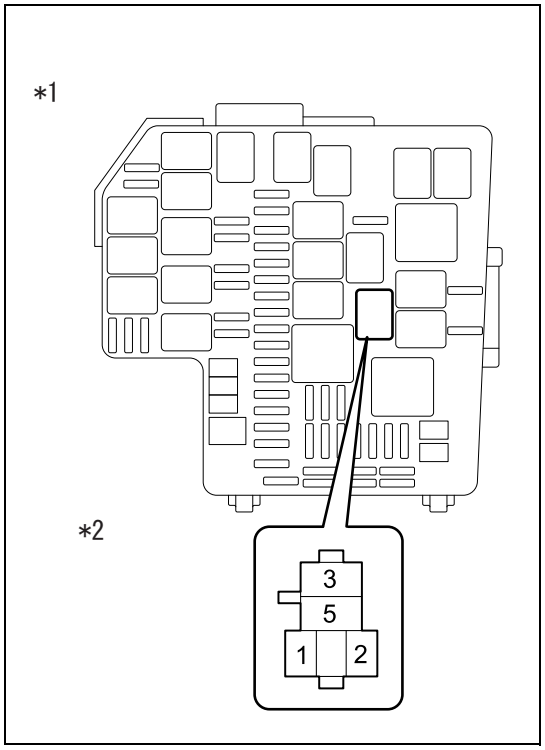

(1) Remove the IG2 relay from the engine compartment relay block.
(2) Measure the voltage between the terminals.
CAUTION:
When using tester probes to take measurements at a relay holder, do not push them hard against the holder. Otherwise the holder could be damaged.

Voltage:

Inspection terminals	Inspection conditions	Standard value
5 (IG2 relay holder) - chassis ground	Always	11 to 14 V

Captions in illustration

*1	Engine compartment relay block
*2	IG2 relay holder

Result

Result	Go to
Malfunction	A
Normal (models with smart entry & start system)	B
Normal (models without smart entry & start system)	C

B → Go to Step 11.

C → Go to Step 12.

A

Repair or replacement of wiring harness or connector

11	Check wiring harness and connector (IG2 relay - smart key computer ASSY)

NOTE:
Refer to IN - 36for inspection procedure and precautions of wiring harness and connector.
(1) Remove the IG2 relay from the engine compartment relay block.
(2) Disconnect the connector for smart key computer ASSY.
(3) Measure the resistance between the terminals.
CAUTION:
When using tester probes to take measurements at a relay holder, do not push them hard against the holder. Otherwise the holder could be damaged.

Resistance (open circuit check)

Inspection terminals	Inspection conditions	Standard value
2 (IG2 relay holder) - D48-9 (IG2D)	Always	Less than 1 Ω

Resistance (short circuit check)

Inspection terminals	Inspection conditions	Standard value
2 (IG2 relay holder) and D48-9 (IG2D) - other terminals and chassis ground	Always	10 k Ωor more

NG → Repair or replacement of wiring harness or connector

OK

Go to smart entry & start system (Refer to TD - 146)

12	Check wiring harness and connector (IG2 relay - ignition OR starter switch ASSY)

NOTE:
Refer to IN - 36for inspection procedure and precautions of wiring harness and connector.

(1) Remove the IG2 relay from the engine compartment relay block.
(2) Disconnect the connector for the ignition OR starter switch ASSY.
(3) Measure the resistance between the terminals.
CAUTION:
When using tester probes to take measurements at a relay holder, do not push them hard against the holder. Otherwise the holder could be damaged.

Resistance (open circuit check)

Inspection terminals	Inspection conditions	Standard value
2 (IG2 relay holder) - D55-8 (IG2)	Always	Less than 1 Ω

Resistance (short circuit check)

Inspection terminals	Inspection conditions	Standard value
2 (IG2 relay holder) and D55-8 (IG2) - other terminals and chassis ground	Always	10 k Ωor more

NG → Repair or replacement of wiring harness or connector

OK

13	Perform a unit inspection of ignition OR starter switch ASSY

(1) Check the ignition OR starter switch ASSY as a single part. (Refer to ST - 46)

NG → Replacement of ignition or starter switch ASSY (Refer to ST - 45)

OK

Repair or replacement of wiring harness or connector

Ignition system (FA20)

Parts location

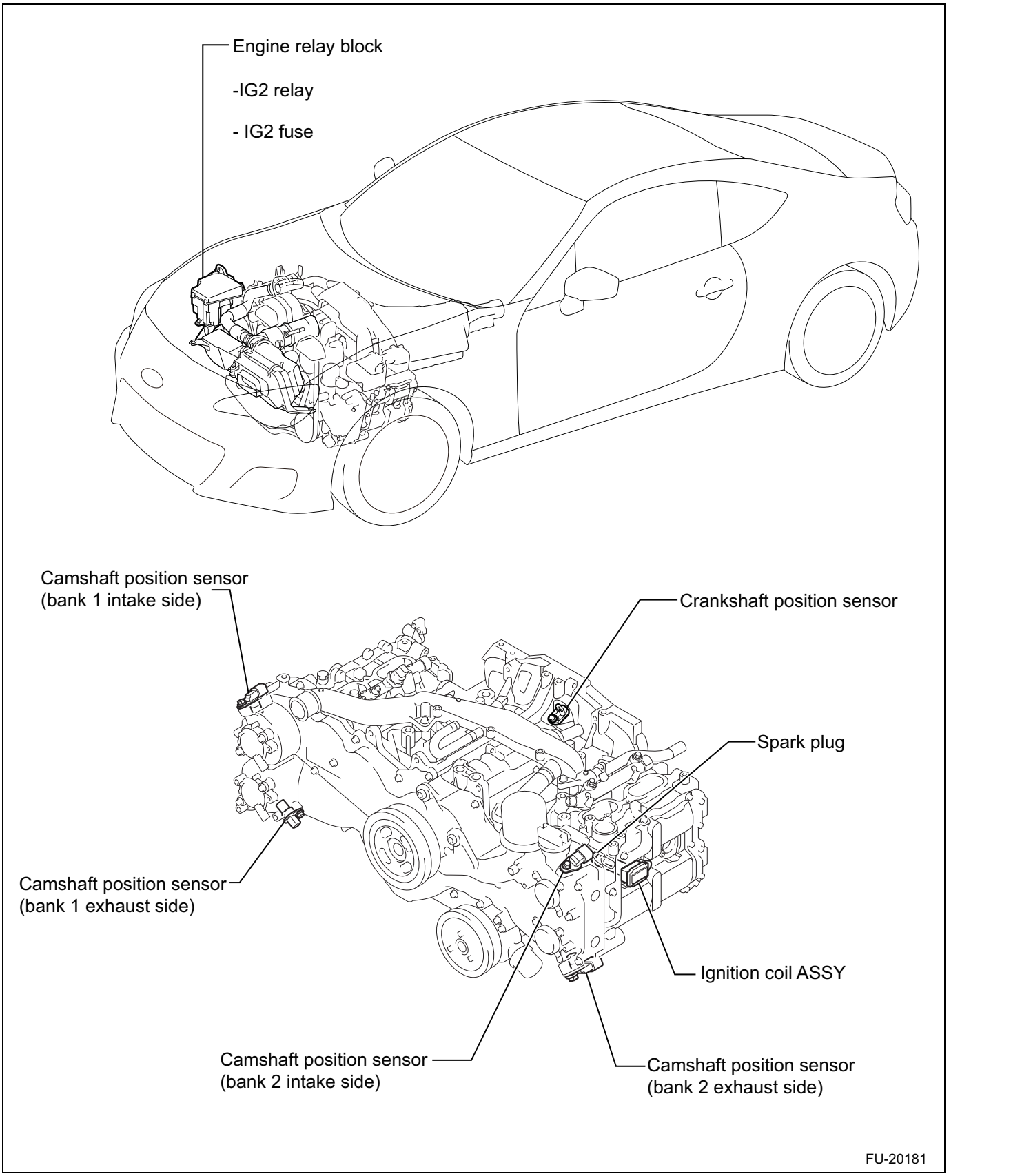

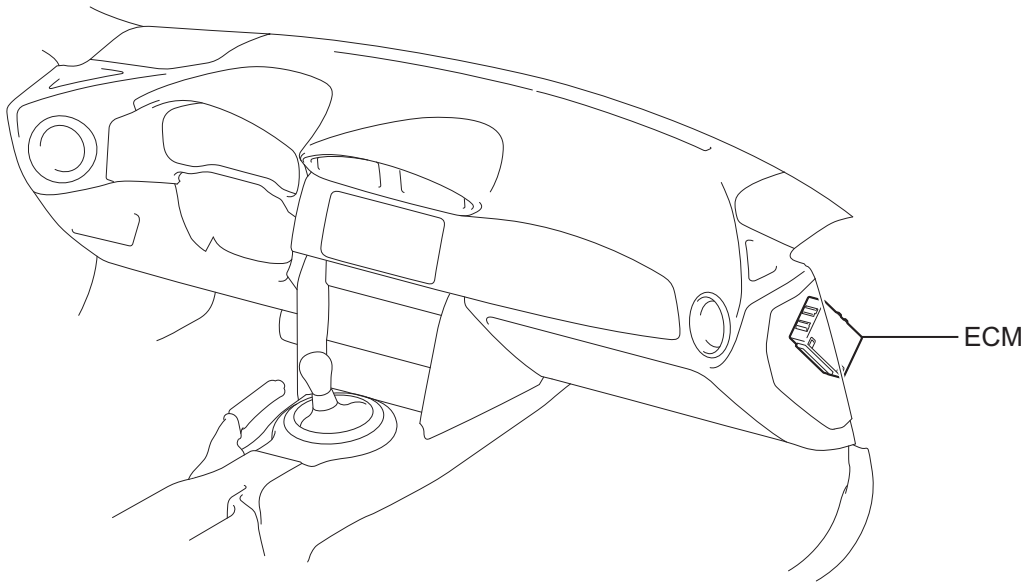
ECM

Circuit figure

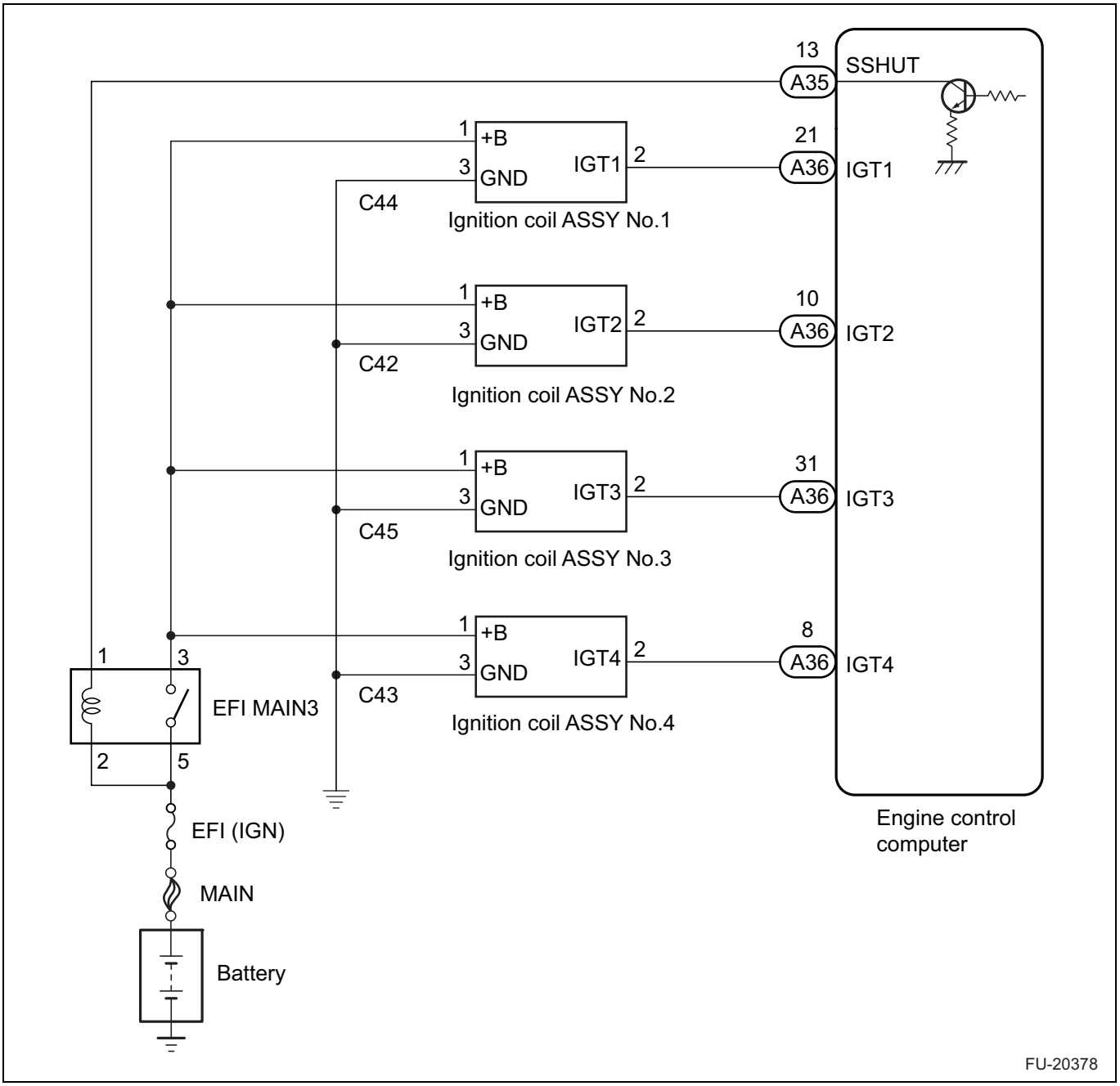

On-vehicle inspection

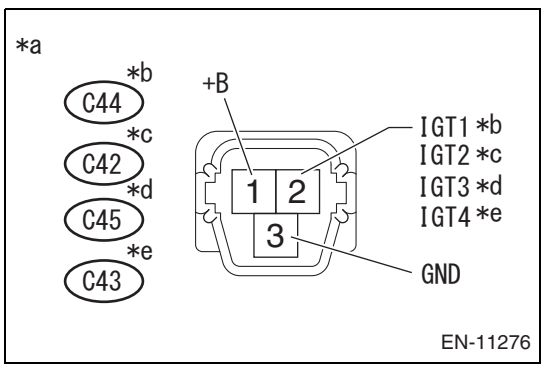

1. Ignition coil ASSY inspection
   (1) Input voltage inspection
   (a) Disconnect the connector of the ignition coil ASSY.
   (b) Turn the ignition switch to ON.
   (c) Check the voltage between terminals of the vehicle side connector for the ignition coil ASSY.

Voltage

Inspection terminals	Inspection conditions	Standard value
C44-1 - chassis ground	IG ON	11 to 14 V
C42-1 - chassis ground	IG ON	11 to 14 V
C45-1 - chassis ground	IG ON	11 to 14 V
C43-1 - chassis ground	IG ON	11 to 14 V

Captions in illustration

*a	Front side of vehicle wiring harness connector (ignition coil ASSY connector)
*b	No. 1 cylinder
*c	No. 2 cylinder
*d	No. 3 cylinder
*e	No. 4 cylinder

(d)Turn the ignition switch to OFF.

2. Spark Inspection

(1) Check the DTC. (Refer to IN - 30)

CAUTION:

When DTC is detected, perform the troubleshooting for DTC.

(2) Remove 4 ignition coils and 4 spark plugs. (Refer to ES - 687)

(3) Use the following procedures to remove the SST.

(a)Using the SST, lift the engine ASSY.

SST 99099AJ000, 18679AA020

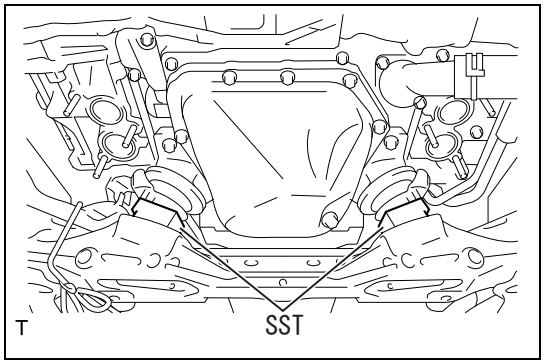

(b)Remove the SST.

SST 18632AA020

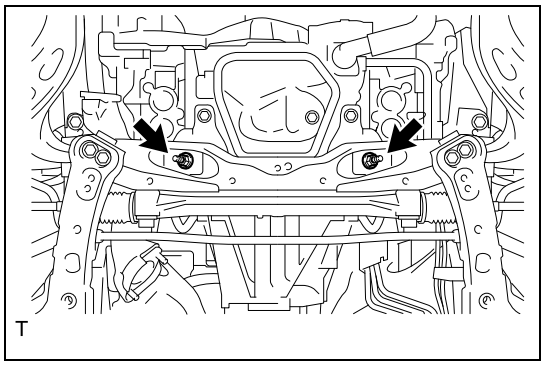

(c)Install the two nuts of the new engine mounting.

Standard value:T=60N·m {612kgf·cm} {44.2ft·lbf}

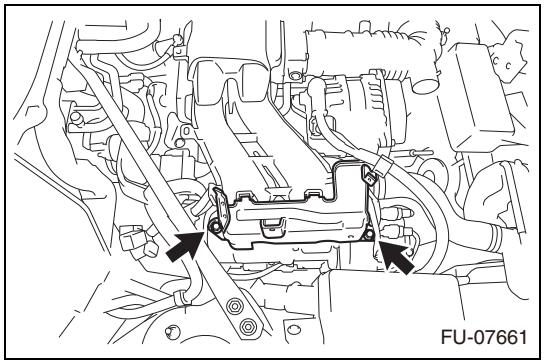

(4) Remove the 2 bolts, and remove the intake manifold protector (bank 1 side).

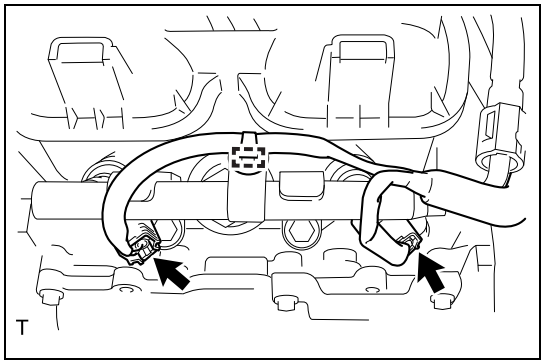

(5) Disconnect 2 connectors for the fuel injector and disconnect the clamp.

ES

(6) Install the intake manifold protector (bank 1 side).

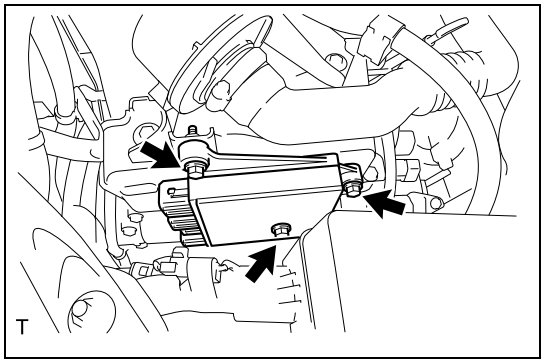

(7) Install the injector driver.
NOTE:
Leave 2 upper connectors disconnected.

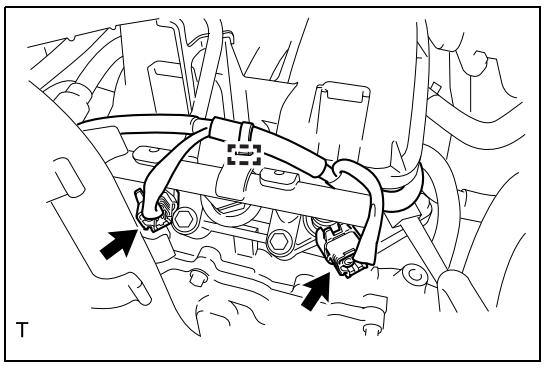

(8) Disconnect 2 connectors for the fuel injector and disconnect the clamp.

(9) Reconnect the battery ground terminal.
Standard value:T=6.0N·m {61kgf·cm} {4.4ft·lbf}

(10) Install the air cleaner case SUB-ASSY.

(11) Attach the spark plug to the ignition coil ASSY, and connect the connector.

(12) Ground the spark plug.

(13) Check that the ignition spark is fired when the engine is cranked.
CAUTION:
- The ground electrode of the spark plug must be checked with the hexagonal part or threaded part grounded.
- When the ignition coil is exposed to physical shock such as dropping, always replace it with a new one.
- Do not crank the engine for 2 seconds or more.
- For models with smart entry & start system, the cranking hold control makes the engine cranking continue for a certain period of time if the engine does not start. When stopping cranking the engine, press the engine switch again.

(14) Check that the connector for the ignition coil ASSY is connected securely.

Result

Result	Go to
NG	Connect the connector securely.
OK	Next

(15) Inspection of ignition coil ASSY
(a) When there is a cylinder in which the ignition does not occur, replace the ignition coil ASSY for abnormal ignition cylinder with that for normal ignition cylinder.

(b)Check that the ignition spark is fired when the engine is cranked.

Result

Result	Go to
OK	Replace the ignition coil ASSY.
NG	Next

(16) Inspection of the spark plug (Refer to ES - 658)

Result

Result	Go to
NG	Replace the spark plug.
OK	Next

(17) Inspection of wiring harness and connector for ignition coil ASSY (power supply circuit) (Refer to ES - 321)

Result

Result	Go to
NG	Repair or replace the harness or connector for the power supply circuit.
OK	Next

(18) Inspection of camshaft position sensor

(a)Inspection of intake side (Refer to ES - 311)

(b)Inspection of exhaust side (Refer to ES - 323)

(19) Inspection of crankshaft position sensor (Refer to ES - 306)

(20) Check the IGT signal system circuit. (Refer to ES - 317)

(21) Disconnect the battery ground terminal.

(22) Remove the air cleaner case SUB-ASSY.

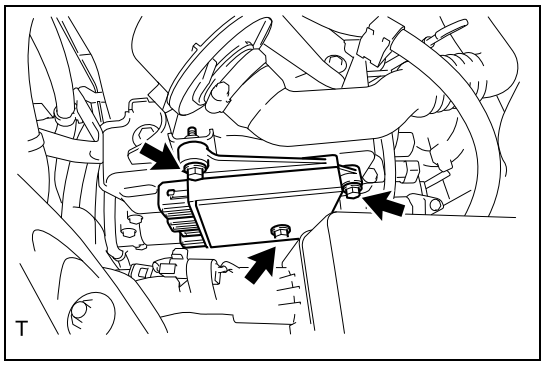

(23) Remove the three bolts and remove the injector driver.

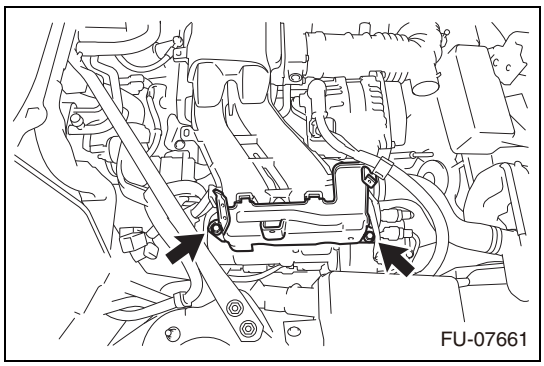

(24) Remove the 2 bolts, and remove the intake manifold protector (bank 1 side).

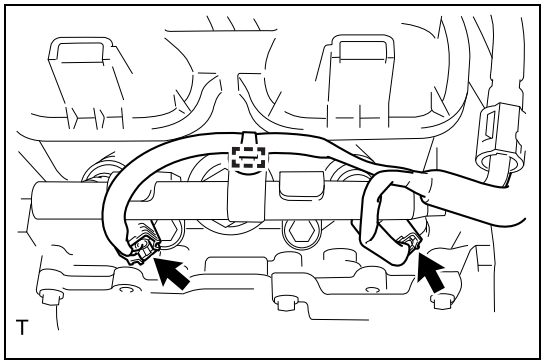

(25) Connect 2 connectors for the fuel injector and connect the clamp.

ES

(26) Using 2 bolts, install the intake manifold protector (bank 1 side).

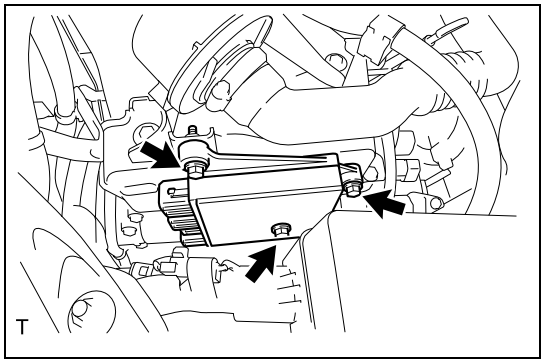

(27) Install the injector driver with the three bolts.

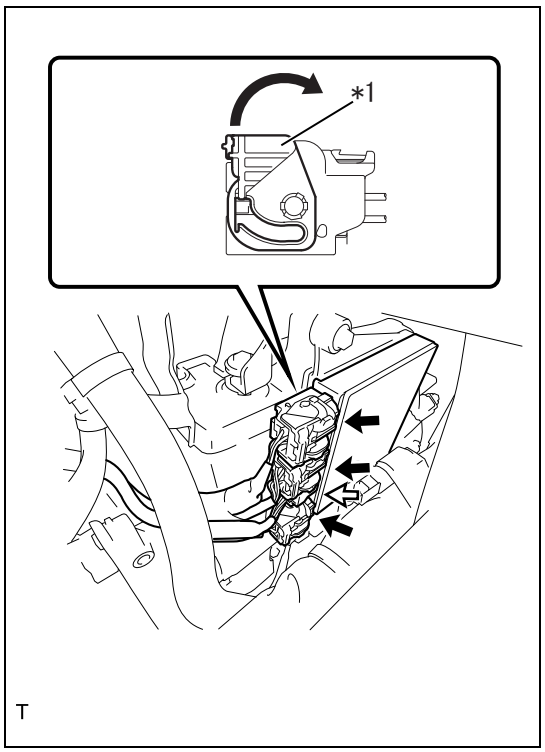

(28) Connect the three connectors with lock and normal connector to the injector driver and move the lock lever as shown in the figure to lock the three connectors with lock.

Captions in illustration

*1	Lock lever
➡	Connector with lock
⇨	Normal connector

CAUTION:
For connector with lock, connect the connector securely to lock it.

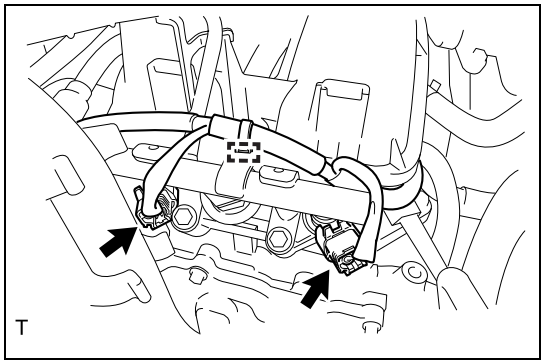

(29) Connect 2 connectors for the fuel injector and connect the clamp.

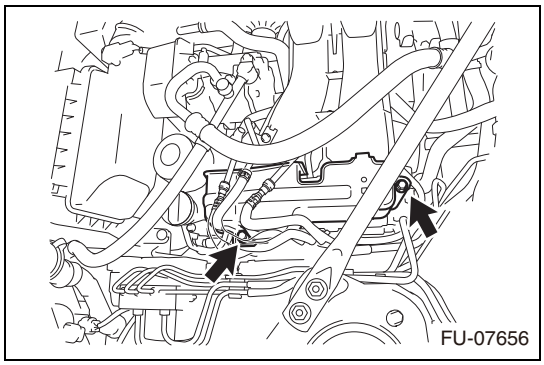

(30) Using 2 bolts, install the intake manifold protector (bank 2 side).

(31) Use the following procedures to install the SST.

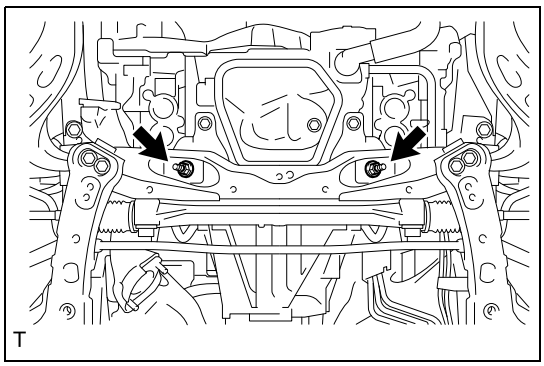

(a) Remove 2 nuts on the engine mount.

(b) Using the SST, lift the engine ASSY.
SST 99099AJ000, 18679AA020

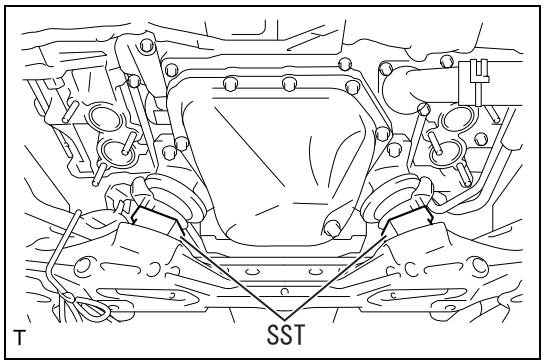

(c) Install the SST between engine mount and front crossmember.
SST 18632AA020

(32) Install 4 ignition coils and 4 spark plugs. (Refer to ES - 692)

CAUTION:
After the operation is completed, be sure to clear the DTC memory, and then check that no DTCs are detected. (Refer to IN - 30)

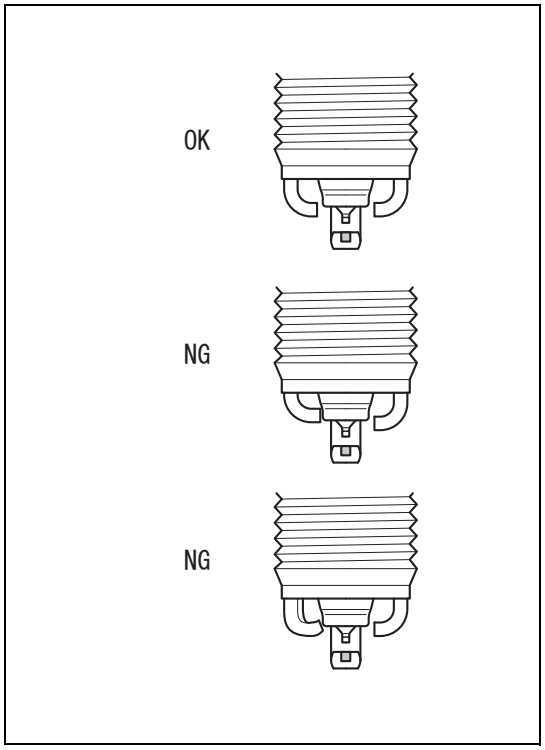

3. Spark plug inspection

CAUTION:

- Because the iridium plug is adopted, the gap adjustment is not required.
- Do not scratch the iridium or platinum tip.
- If heavily contaminated with sludge etc., replace the spark plug with a new one.
- When replacing with a new spark plug, do not remove the cap for protecting the tip until the spark plug is installed to the engine.
- If the spark plug is dropped accidentally, replace it with a new one.
- Check the gap visually. Otherwise, the iridium tip may be damaged.
- If damaged, replace the spark plug.

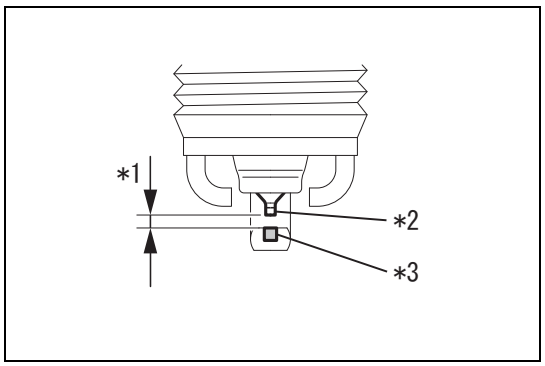

NOTE:

Plug type and gap

Manufacturer	Type	Reference value [mm {in}] (plug gap [new])	Reference value [mm {in}] (maximum plug gap [used])
DENSO	ZXE27HBR8	0.7 to 0.8 {0.028 to 0.031}	1.0 {0.039}

Captions in illustration

*1	0.7 to 0.8 mm {0.028 to 0.031 in}
*2	Iridium tip
*3	Platinum tip

(1) Visual inspection

(a) Start the engine.

(b) Race the engine 5 times by acceleration and deceleration at high engine speed (4000 r/min).

(c) Remove the spark plug.

(d) Check the electrode (iridium, platinum tip), threaded portion and insulator of the spark plug for damage.

Cam timing oil control valve ASSY (FA20)

Exploded view

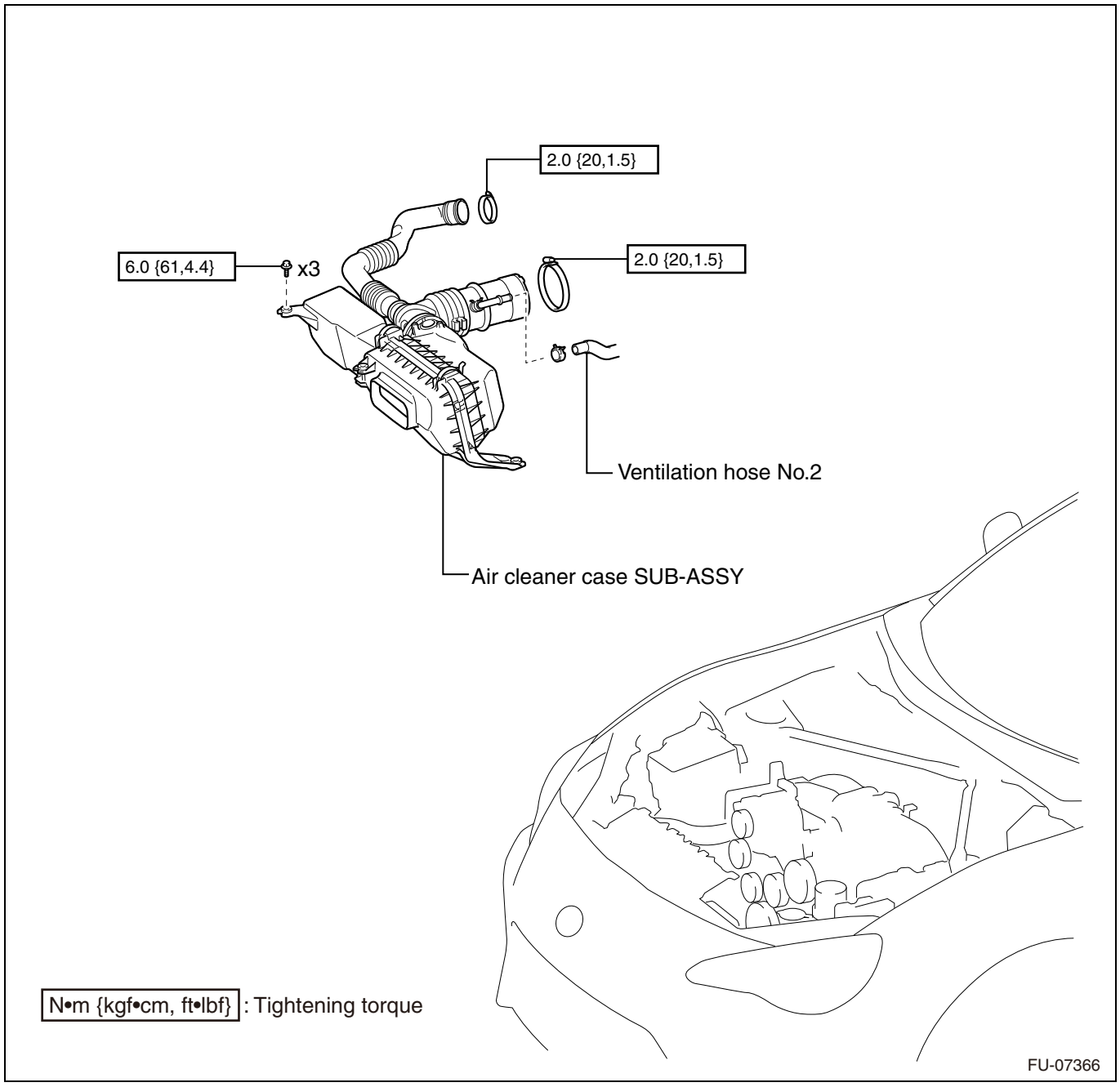

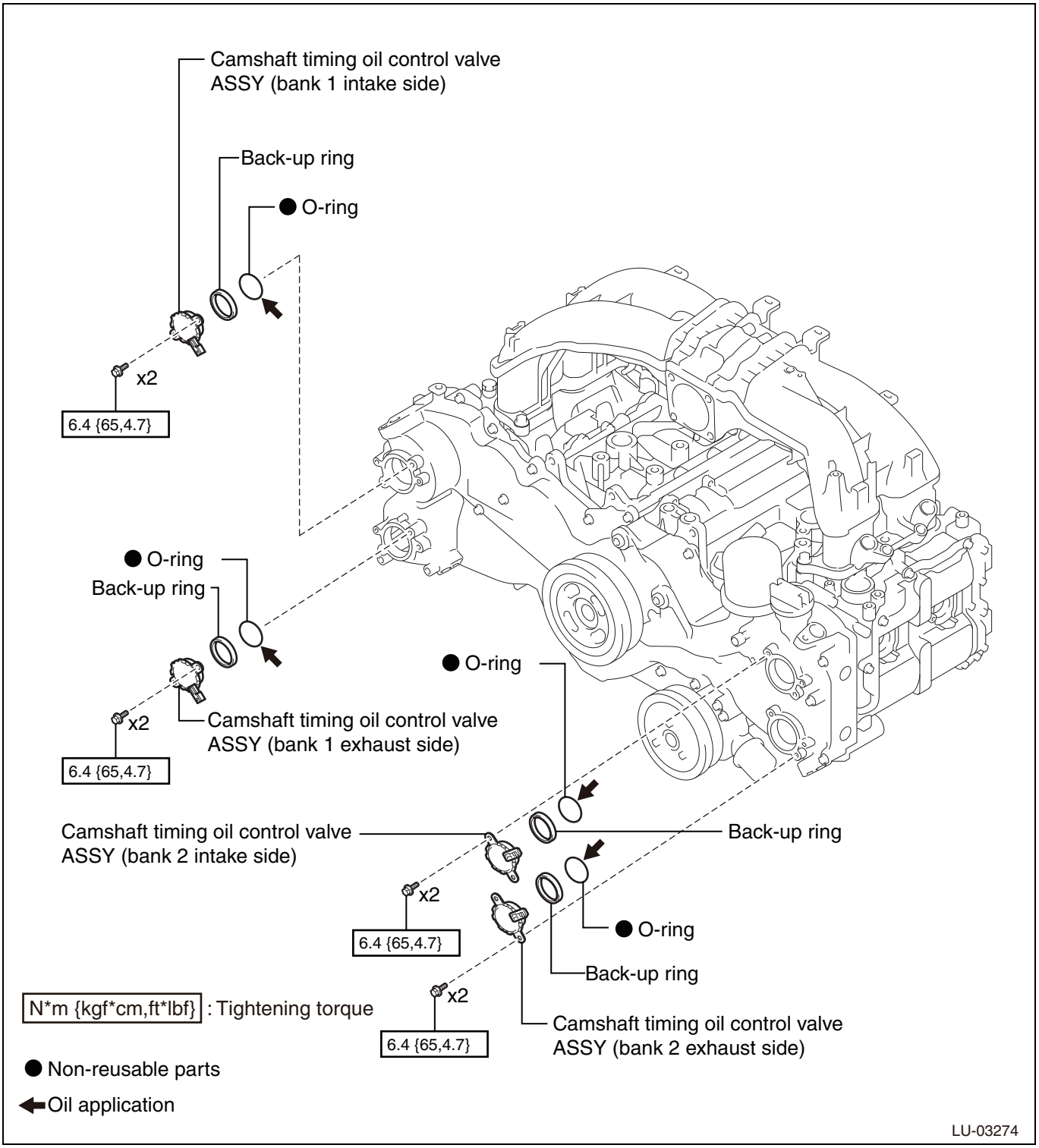

Removal

1. Disconnection of the battery ground terminal (Refer to IN - 6)

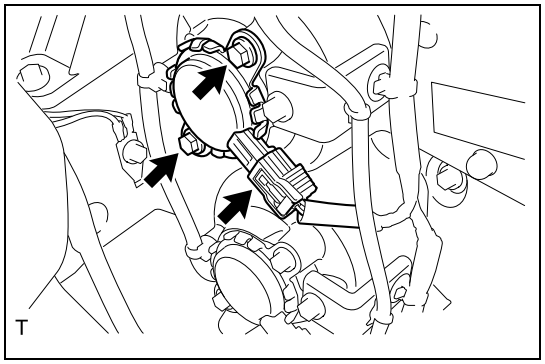

2. Removal of camshaft timing oil control valve ASSY (bank 1 intake side)
   (1) Disconnect the connector for camshaft timing oil control valve ASSY.
   (2) Remove 2 bolts, and remove the camshaft timing oil control valve ASSY.

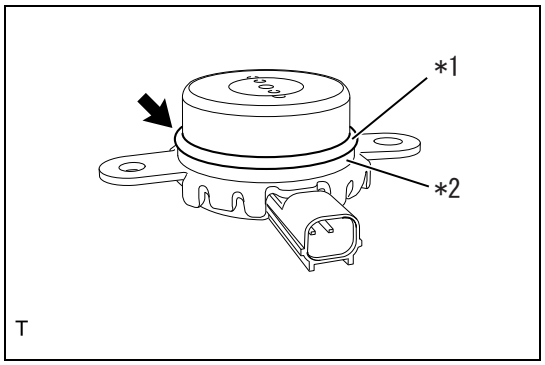

   (3) Remove the O-ring from the camshaft timing oil control valve ASSY.

Captions in illustration

*1	O-ring
*2	Back-up ring

   (4) Remove the back-up ring from the camshaft timing oil control valve ASSY.

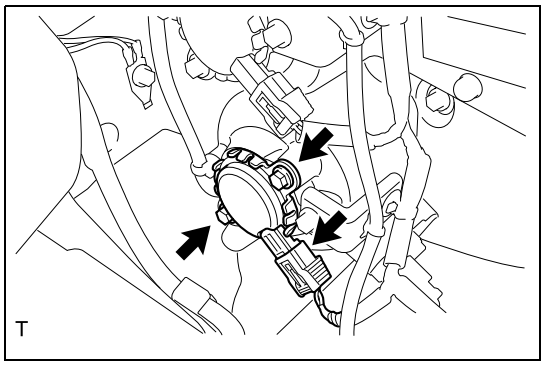

3. Removal of camshaft timing oil control valve ASSY (bank 1 exhaust side)
   (1) Disconnect the connector for camshaft timing oil control valve ASSY.
   (2) Remove 2 bolts, and remove the camshaft timing oil control valve ASSY.

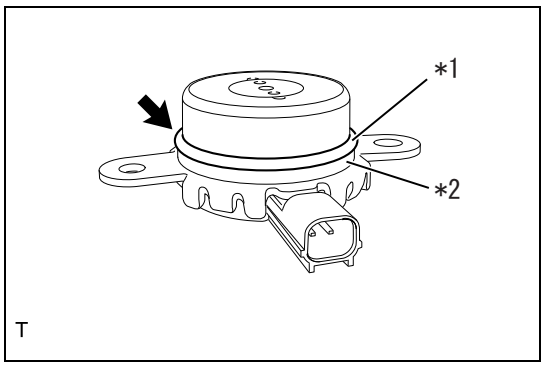

   (3) Remove the O-ring from the camshaft timing oil control valve ASSY.

Captions in illustration

*1	O-ring
*2	Back-up ring

   (4) Remove the back-up ring from the camshaft timing oil control valve ASSY.

4. Removal of air cleaner case SUB-ASSY (Refer to EM - 5)

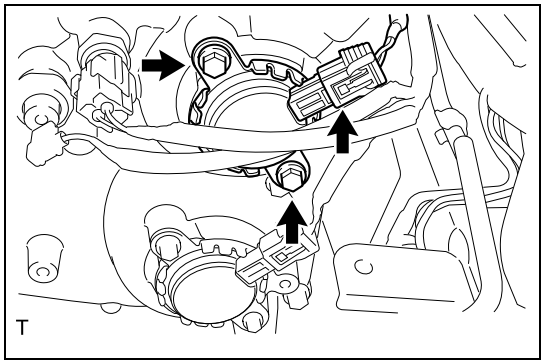

5. Removal of camshaft timing oil control valve ASSY (bank 2 intake side)
   (1) Disconnect the connector for camshaft timing oil control valve ASSY.
   (2) Remove 2 bolts, and remove the camshaft timing oil control valve ASSY.

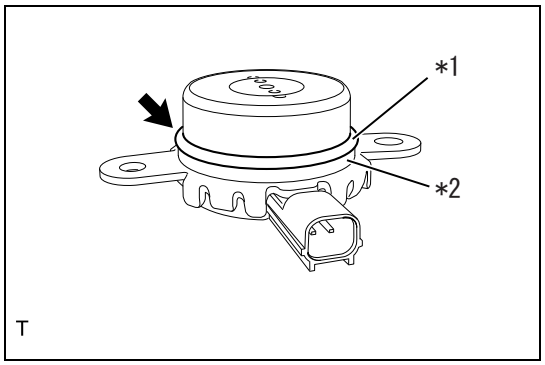

   (3) Remove the O-ring from the camshaft timing oil control valve ASSY.

Captions in illustration

*1	O-ring
*2	Back-up ring

   (4) Remove the back-up ring from the camshaft timing oil control valve ASSY.

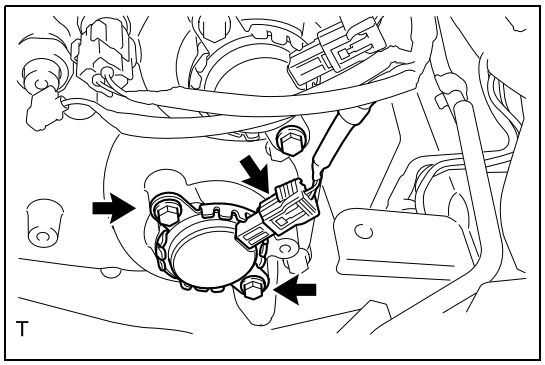

6. Removal of camshaft timing oil control valve ASSY (bank 2 exhaust side)
   (1) Disconnect the connector for camshaft timing oil control valve ASSY.
   (2) Remove 2 bolts, and remove the camshaft timing oil control valve ASSY.

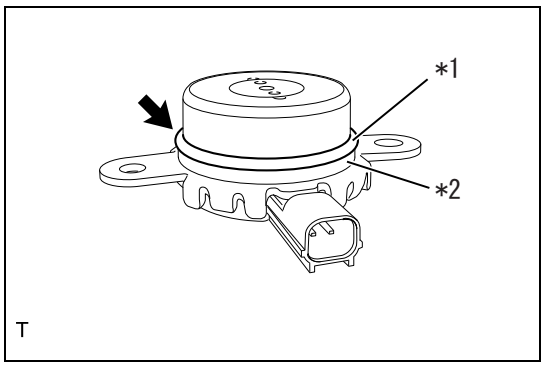

   (3) Remove the O-ring from the camshaft timing oil control valve ASSY.

Captions in illustration

*1	O-ring
*2	Back-up ring

   (4) Remove the back-up ring from the camshaft timing oil control valve ASSY.

Installation

1. Installation of camshaft timing oil control valve ASSY (bank 2 exhaust side)
   (1) Install the back-up ring to the camshaft timing oil control valve ASSY.
   (2) Apply new engine oil to a new O-ring, and attach it to the camshaft timing oil control valve ASSY.
   (3) Using 2 bolts, install the camshaft timing oil control valve ASSY.
   Standard value:T=6.4N·m {65kgf·cm} {4.7ft·lbf}
   (4) Connect the connector for camshaft timing oil control valve ASSY.
2. Installation of camshaft timing oil control valve ASSY (bank 2 intake side)
   (1) Install the back-up ring to the camshaft timing oil control valve ASSY.

(2) Apply new engine oil to a new O-ring, and attach it to the camshaft timing oil control valve ASSY.
(3) Using 2 bolts, install the camshaft timing oil control valve ASSY.
Standard value:T=6.4N·m {65kgf·cm} {4.7ft·lbf}
(4) Connect the connector for camshaft timing oil control valve ASSY.

3. Installation of the air cleaner case SUB-ASSY (Refer to EM - 8)
4. Installation of camshaft timing oil control valve ASSY (bank 1 exhaust side)
(1) Install the back-up ring to the camshaft timing oil control valve ASSY.
(2) Apply new engine oil to a new O-ring, and attach it to the camshaft timing oil control valve ASSY.
(3) Using 2 bolts, install the camshaft timing oil control valve ASSY.
Standard value:T=6.4N·m {65kgf·cm} {4.7ft·lbf}
(4) Connect the connector for camshaft timing oil control valve ASSY.
5. Installation of camshaft timing oil control valve ASSY (bank 1 intake side)
(1) Install the back-up ring to the camshaft timing oil control valve ASSY.
(2) Apply new engine oil to a new O-ring, and attach it to the camshaft timing oil control valve ASSY.
(3) Using 2 bolts, install the camshaft timing oil control valve ASSY.
Standard value:T=6.4N·m {65kgf·cm} {4.7ft·lbf}
(4) Connect the connector for camshaft timing oil control valve ASSY.
6. Connection of the battery ground terminal
Standard value:T=6.0N·m {61kgf·cm} {4.4ft·lbf}

ES

Unit inspection

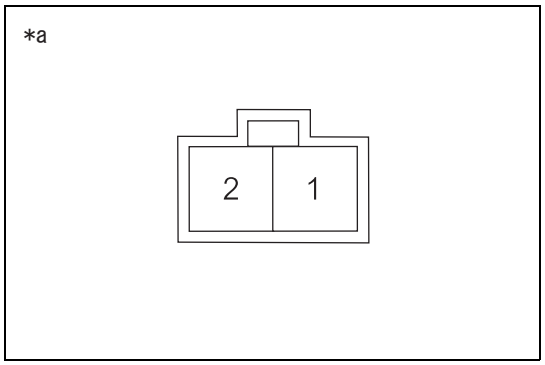

1. Inspection of camshaft timing oil control valve ASSY
(1) Measure the resistance between the terminals.
Resistance

Inspection terminals	Inspection conditions	Standard value
1 - 2	20°C {68°F}	6.85 to 7.65Ω

Captions in illustration

*a	Connector not connected (camshaft timing oil control valve ASSY)

Throttle body ASSY (FA20)

Exploded view

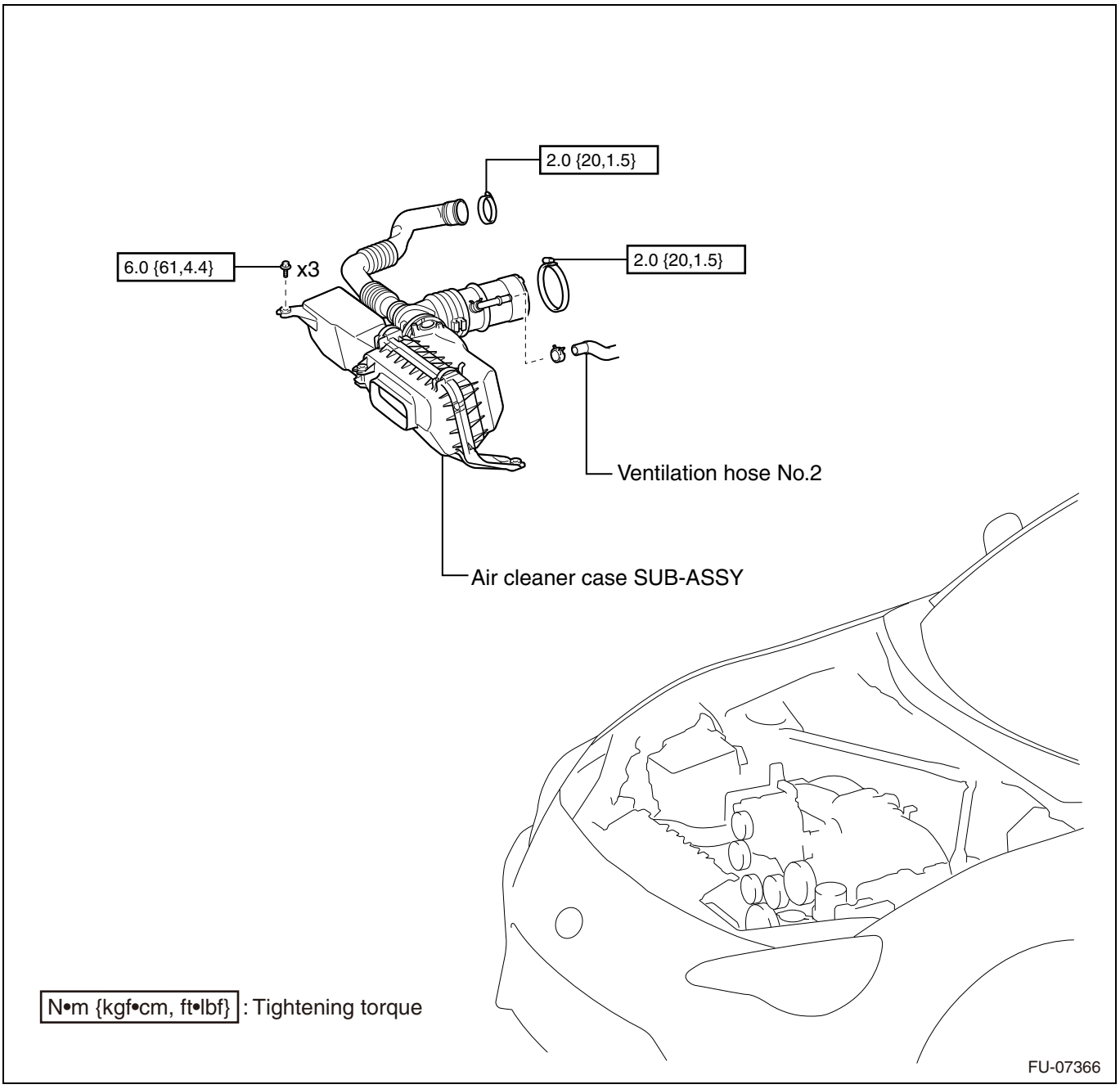

Transmission A/T:

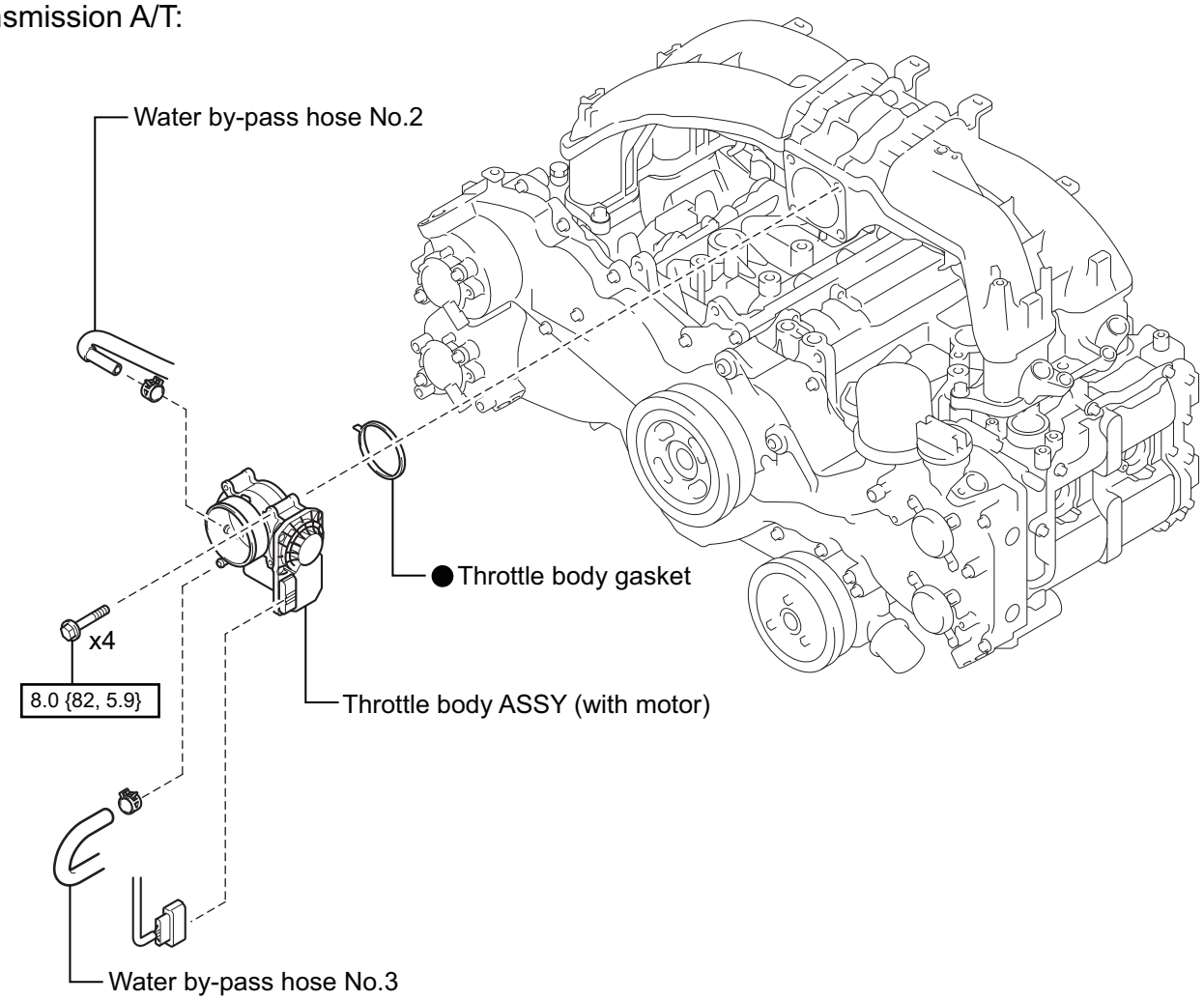

N*m {kgf*cm, ft*lbf} : Tightening torque

● Non-reusable part

FU-20164

ES

Transmission M/T:

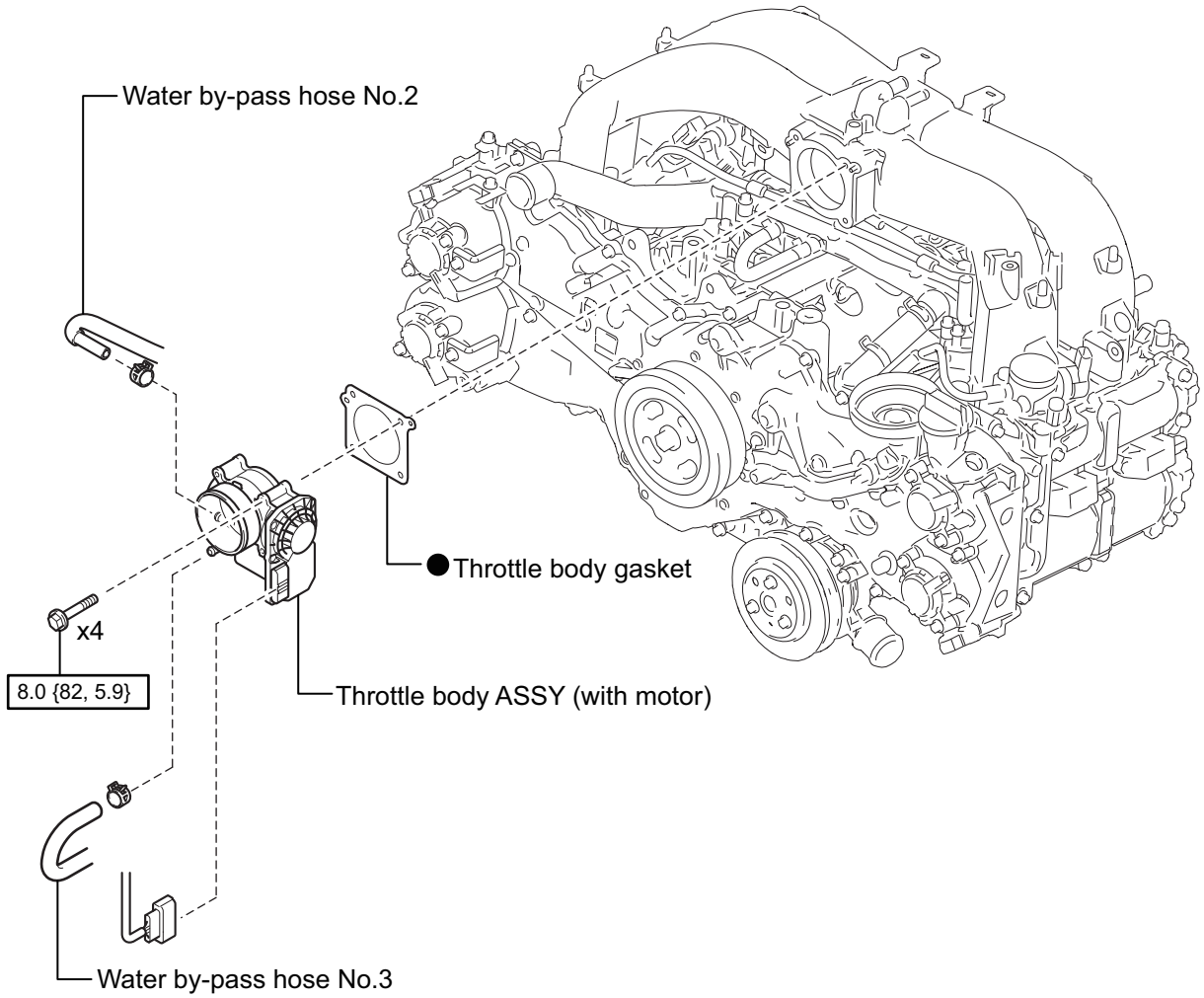

N*m {kgf*cm, ft*lbf} : Tightening torque

● Non-reusable part

FU-20165

Removal

1. Disconnection of the battery ground terminal (Refer to IN - 6)
2. Draining of coolant (SUBARU Super Coolant) (Refer to CO - 16)
3. Removal of air cleaner case SUB-ASSY (Refer to EM - 5)

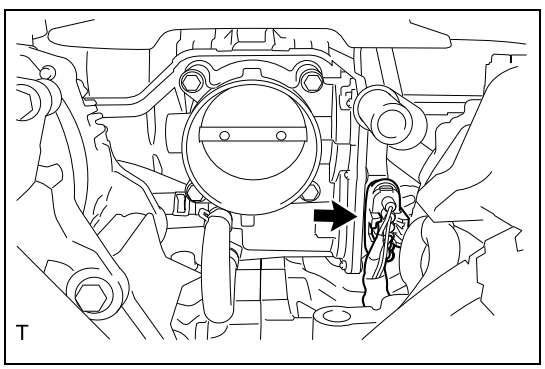

4. Removal of throttle body ASSY (with motor)
   (1) Disconnect the connector for the throttle body ASSY (with motor).

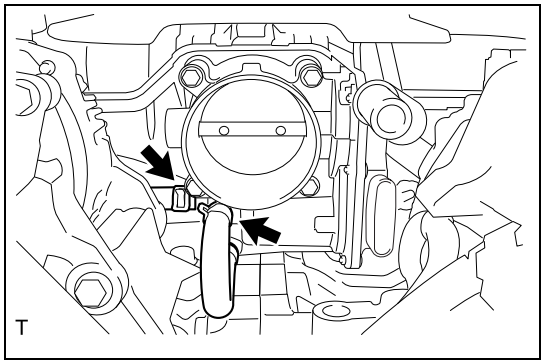

(2) Slide 2 clamps, and disconnect the water bypass hose No. 2 and water bypass hose No. 3 from the throttle body ASSY (with motor).

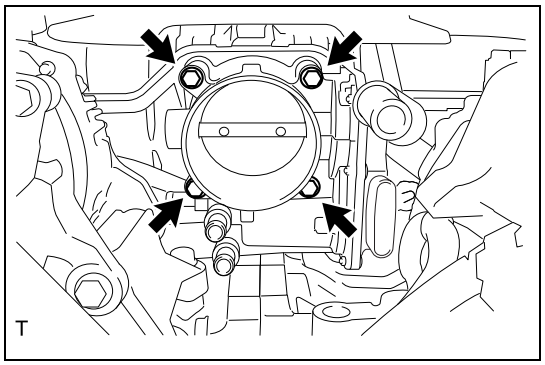

(3) Remove 4 bolts, and remove the throttle body ASSY (with motor) from the intake manifold.
(4) Remove the throttle body gasket from the intake manifold.

Installation

1. Installation of throttle body ASSY (with motor)
   (1) Use a new throttle body gasket, install the throttle body ASSY (with motor) to the intake manifold with 4 bolts.
   Standard value:T=8.0N·m {82kgf·cm} {5.9ft·lbf}
   (2) Using 2 clamps, connect the water bypass hose No. 2 and water bypass hose No. 3 to the throttle body ASSY (with motor).
   (3) Connect the connector for the throttle body ASSY (with motor).
2. Installation of air cleaner case SUB-ASSY (Refer to EM - 8)
3. Connection of the battery ground terminal
   Standard value:T=6.0N·m {61kgf·cm} {4.4ft·lbf}
4. Replenishing of coolant (SUBARU Super Coolant) (Refer to CO - 16)
5. Leak check of coolant (SUBARU Super Coolant) (Refer to CO - 2)
6. Function inspection of throttle body ASSY (with motor) (Refer to ES - 667)

On-vehicle inspection

1. Function inspection of throttle body ASSY (with motor)
   CAUTION:
   Be sure to perform the function inspection after assembly of the throttle body or removal/installation of the component parts.
   (1) Remove the EFI (+B) fuse (7.5 A) and ETCS fuse (15 A), wait for 60 seconds or more, and then reconnect the fuses.
   (2) After installing the throttle body to the vehicle, turn the ignition switch to ON without operating the accelerator pedal.
   CAUTION:
   If the accelerator pedal is operated by mistake, repeat the steps from the beginning.
   (3) Connect the SSM4 to the DLC.
   (4) Clear the diagnostic code using the SSM4.
   (5) Start the engine, and check that the check engine warning light does not illuminate and that the idle speed is within standard value with A/C OFF after warming up the engine.
   Standard value: 600 to 800 r/min
   CAUTION:
   Perform this check with all accessory switches turned OFF, A/C OFF, electric fan OFF, N or P position selected.
   (6) When the accelerator pedal is depressed rapidly down to the full-open position or around, check that [Data monitor] →[Throttle Opening Angle] value varies smoothly in synchronism with the pedal depression.

(7) Perform the driving test, and check that the feeling of strangeness is not provided.

Unit inspection

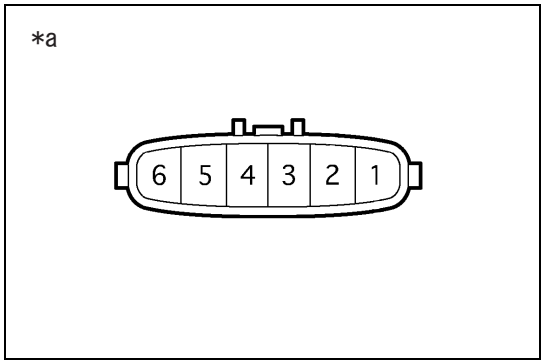

1. Throttle body ASSY (with motor) check
   (1) Measure the resistance between the terminals.
   Resistance

Inspection terminals	Inspection conditions	Standard value
1 - 2	20°C {68°F}	0.3 to 10Ω

Captions in illustration

*a	Connector not connected (throttle body ASSY)

Engine control computer (FA20)

Exploded view

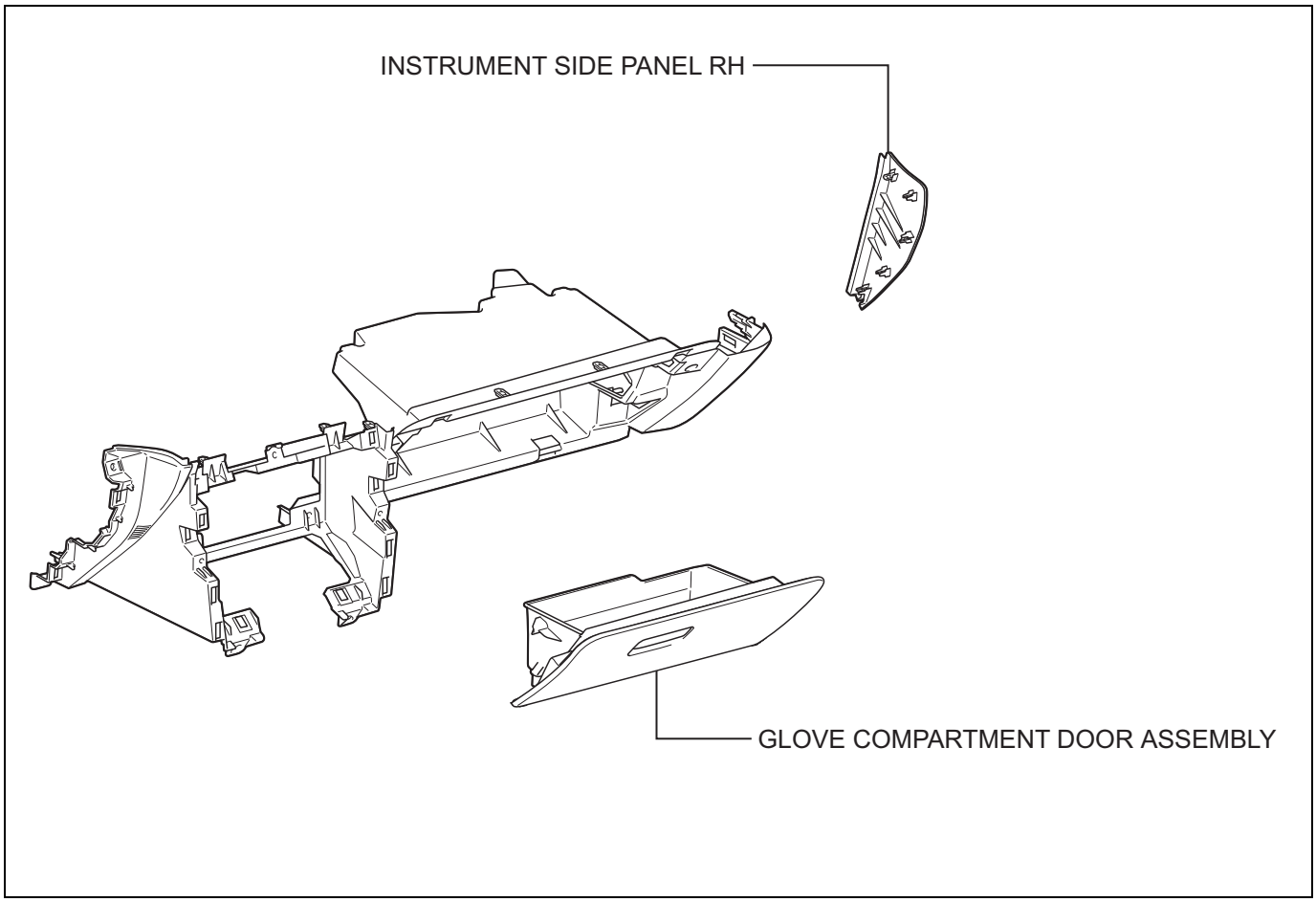

ES

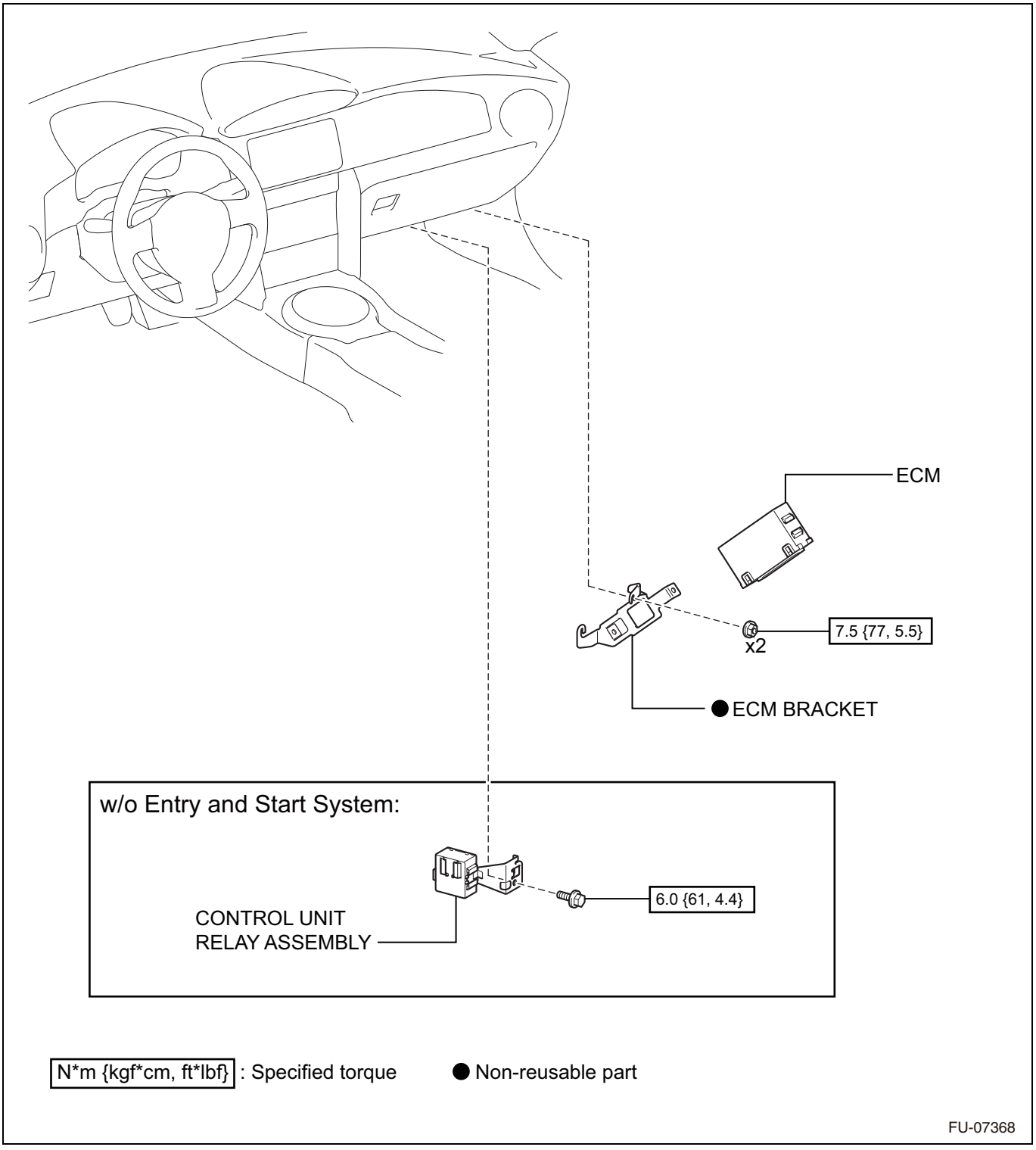

Removal

1. Disconnection of the battery ground terminal (Refer to IN - 6)
2. Removal of the instrument side panel RH (Refer to IT - 24)
3. Removal of glove compartment door ASSY (Refer to IT - 25)
4. Removal of control module relay ASSY (without smart entry) (Refer to ST - 47)

5. Removal of engine control computer

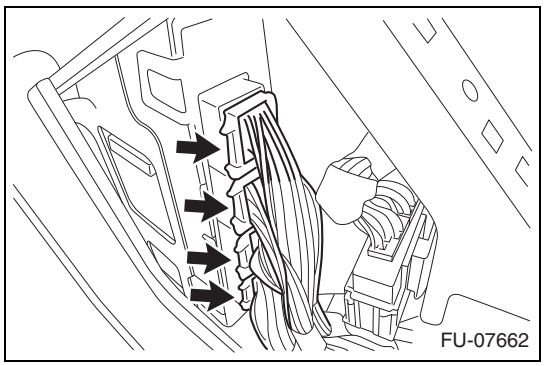

(1) Disconnect 4 connectors for engine control computer.

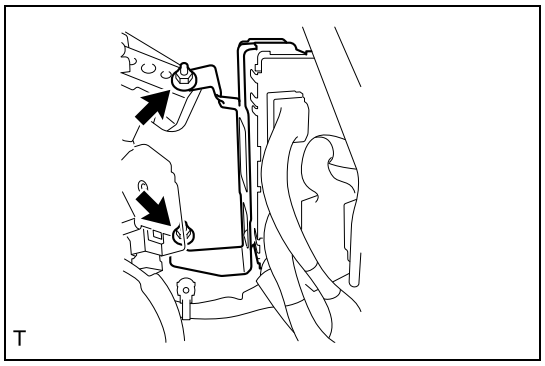

(2) Remove 2 nuts, and remove the engine control computer.

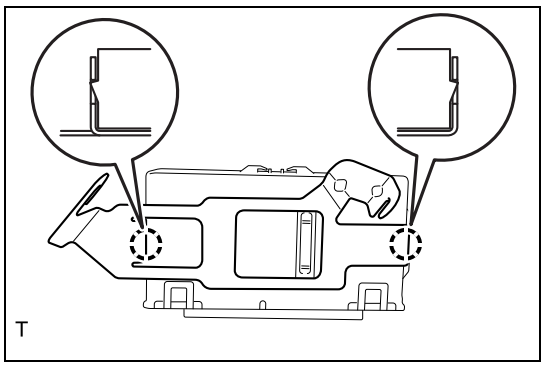

6. Removal of engine control computer bracket
   (1) Release 2 claws, and remove the engine control computer bracket.

Installation

1. Installation of engine control computer bracket
   (1) Replace the bracket with a new one, engage 2 claws, and attach the engine control computer bracket to the engine control computer.
   CAUTION:
   - After attaching the engine control computer bracket to the engine control computer, do not remove the engine control computer bracket.
   - If the engine control computer bracket has been installed to the engine control computer in the wrong direction, replace the engine control computer bracket with a new one.
2. Installation of engine control computer
   CAUTION:
   - If the engine control computer for model with immobilizer is replaced, be sure to register the immobilizer system.
   - When replacing the engine control computer, do not use the one with a wrong specification.
   (1) Using 2 nuts, install the engine control computer.
   Standard value:T=7.5N·m {77kgf·cm} {5.5ft·lbf}
   (2) Connect 4 connectors for engine control computer.
3. Installation of control module relay ASSY (without smart entry) (Refer to ST - 47)
4. Installation of glove compartment door ASSY (Refer to IT - 29)
5. Installation of the instrument side panel RH (Refer to IT - 29)

6. Connection of the battery ground terminal
   Standard value:T=6.0N·m {61kgf·cm} {4.4ft·lbf}

Accelerator pedal rod ASSY (FA20)

Exploded view

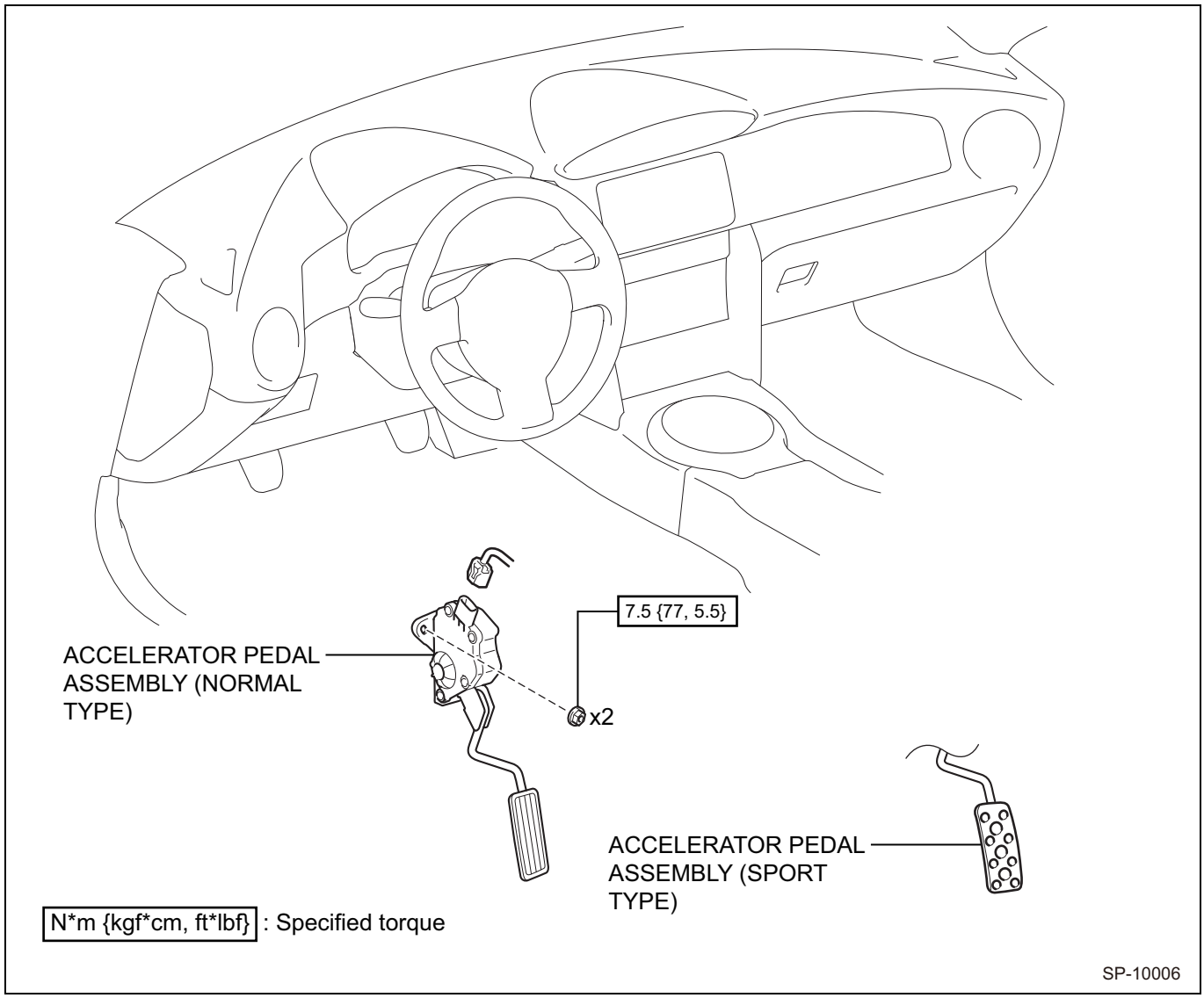

Removal

1. Disconnection of the battery ground terminal (Refer to IN - 6)

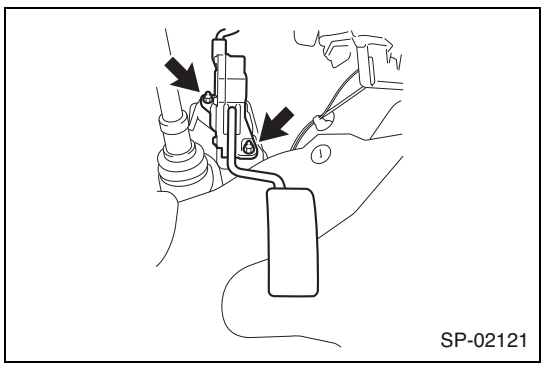

2. Removal of accelerator pedal sensor ASSY
   (1) Disconnect the connector for accelerator pedal sensor ASSY.
   (2) Remove 2 nuts, and remove the accelerator pedal sensor ASSY.

Installation

1. Installation of accelerator pedal sensor ASSY
   (1) Using 2 nuts, install the accelerator pedal sensor ASSY.
   Standard value:T=7.5N·m {77kgf·cm} {5.5ft·lbf}

(2) Connect the connector for accelerator pedal sensor ASSY.

2. Connection of the battery ground terminal
   Standard value:T=6.0N·m {61kgf·cm} {4.4ft·lbf}

On-vehicle inspection

1. Function inspection of accelerator pedal sensor ASSY
   (1) Connect the SSM4 to the DLC.
   (2) Turn the ignition switch to ON.

ES

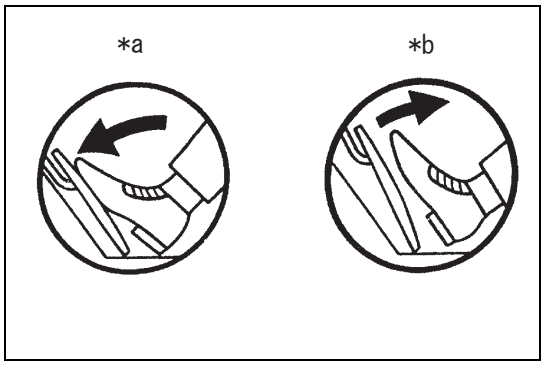

(3) According to the display, select [ECU Data Monitor] →[Accelerator Sensor No1 Voltage and Accelerator Sensor No2 Voltage], and check the value when the accelerator pedal is operated.

Captions in illustration

*a	Full open
*b	Full closed

Voltage

Pedal condition	Accelerator No. 1 sensor voltage	Accelerator No. 2 sensor voltage
Full closed	0.5 to 0.8 V	0.5 to 0.8 V
Full open	2.4 to 3.5 V	2.4 to 3.5 V
Full closed →Full open →Full closed	Voltage shall change continuously.	Voltage shall change continuously.

Intake air flow meter S/A (FA20)

Exploded view

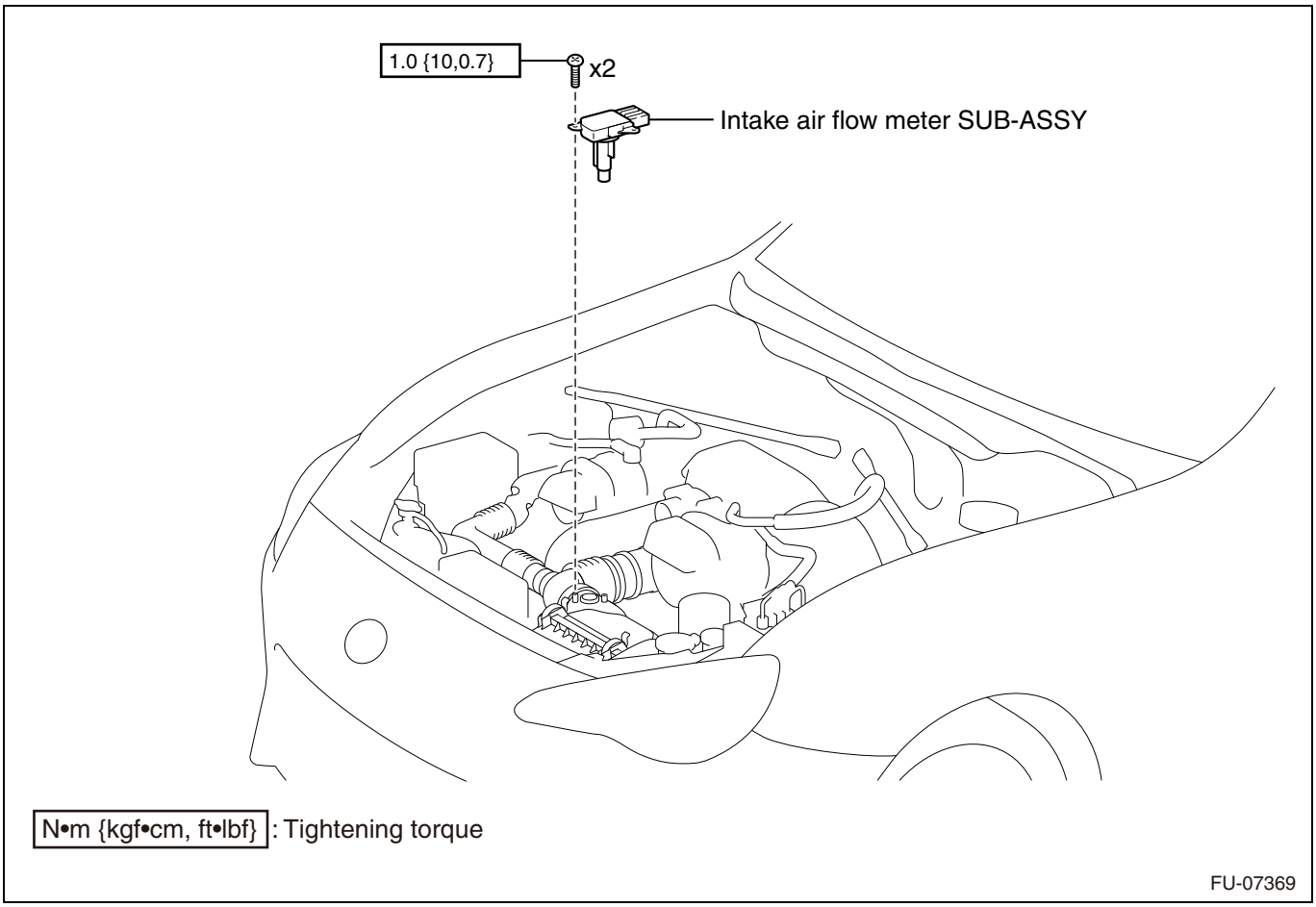

Removal

1. Disconnection of the battery ground terminal (Refer to IN - 6)

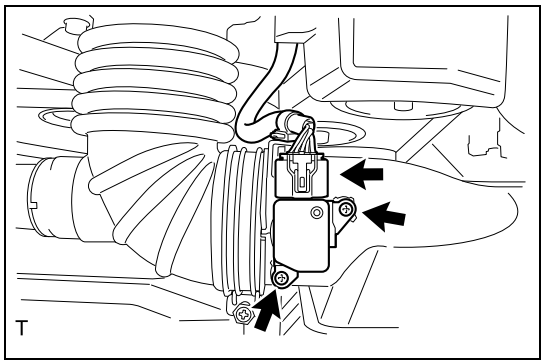

2. Removal of intake air flow meter SUB-ASSY
   (1) Disconnect the connector for intake air flow meter SUB-ASSY.
   (2) Remove 2 screws, and remove the intake air flow meter SUB-ASSY.

Installation

1. Installation of intake air flow meter SUB-ASSY
   (1) Using 2 screws, install the intake air flow meter SUB-ASSY.
   Standard value:T=1.0N·m {10kgf·cm} {0.7ft·lbf}
   (2) Connect the connector for intake air flow meter SUB-ASSY.
2. Connection of the battery ground terminal
   Standard value:T=6.0N·m {61kgf·cm} {4.4ft·lbf}

On-vehicle inspection

1. Function inspection of intake air flow meter SUB-ASSY
   (1) Inspection of intake air amount
   CAUTION:
   - Perform inspection with the vehicle on a level surface and engine stopped.
   - Perform the inspection with the air cleaner ASSY installed.
   - Do not suction the exhaust emission from the exhaust tail pipe with the exhaust duct.

   (a) Connect the SSM4 to the DLC.
   (b) Turn the ignition switch to ON, and then wait for 30 seconds.
   (c) According to the display on the SSM4, select [Data monitor] →[Mass Air Flow], and read the intake air amount.

ES

Standard value

Item name	Inspection conditions	Standard value
Mass air flow	Engine stops 30 seconds after IG ON	Less than 0.85 g/s

CAUTION:
- If it is out of standard value, replace the intake air flow meter SUB-ASSY.
- If it is within standard value, check the intake air flow meter SUB-ASSY. (Refer to ES - 676)

Unit inspection

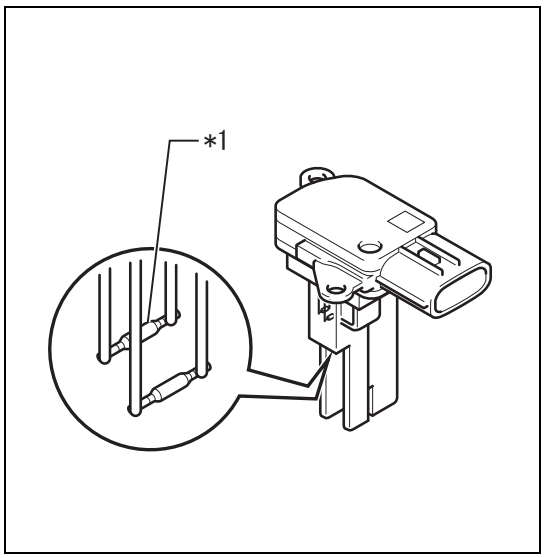

1. Inspection of intake air flow meter SUB-ASSY
   (1) Use a working lamp, visually check the platinum filament (heater) portion of the intake air flow meter SUB-ASSY for foreign matter.

Captions in illustration

*1	Platinum filament (heater)

Criteria: No foreign matter
NOTE:
If there is a foreign matter on the platinum filament (heater), replace the intake air flow meter SUB-ASSY.

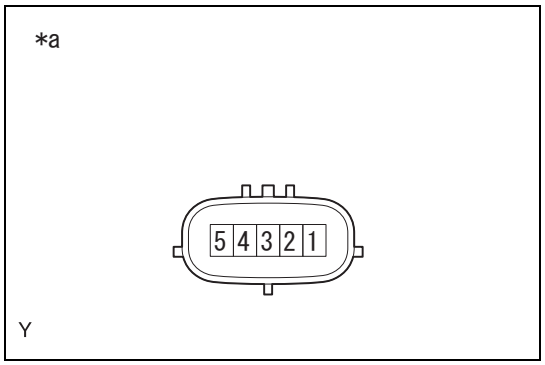

(2) Inspection of intake temperature sensor resistance
   (a) Measure the resistance between the terminals.
   Resistance

Inspection terminals	Inspection conditions	Standard value
1 - 2	-20°C {-4°F}	13.6 to 18.4kΩ
	20°C {68°F}	2.21 to 2.69kΩ
	60°C {140°F}	0.49 to 0.67kΩ

Captions in illustration

*a	Connector not connected (intake air flow meter SUB-ASSY)

Camshaft position sensor (FA20)

Exploded view

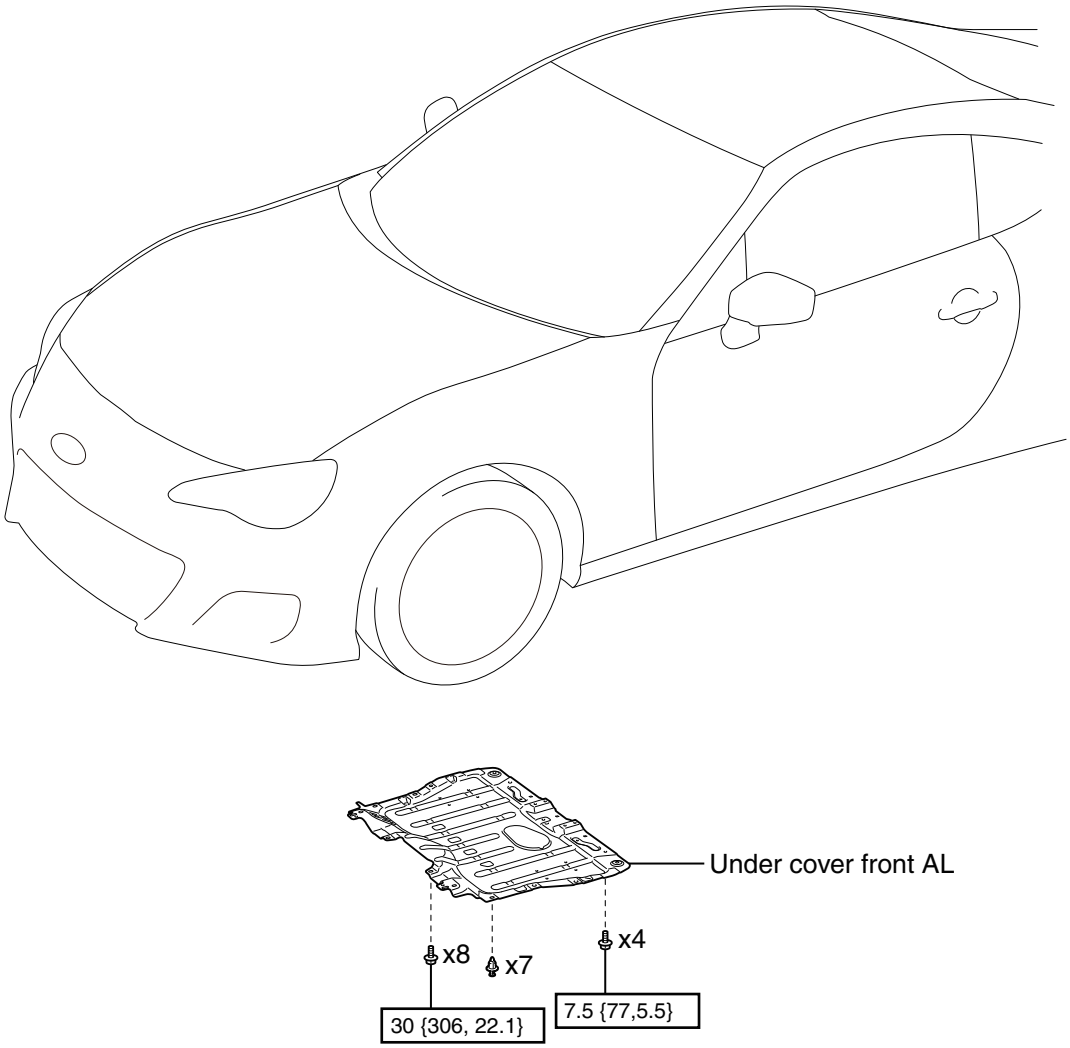

N•m {kgf•cm, ft•lbf}: Tightening torque

FU-07971

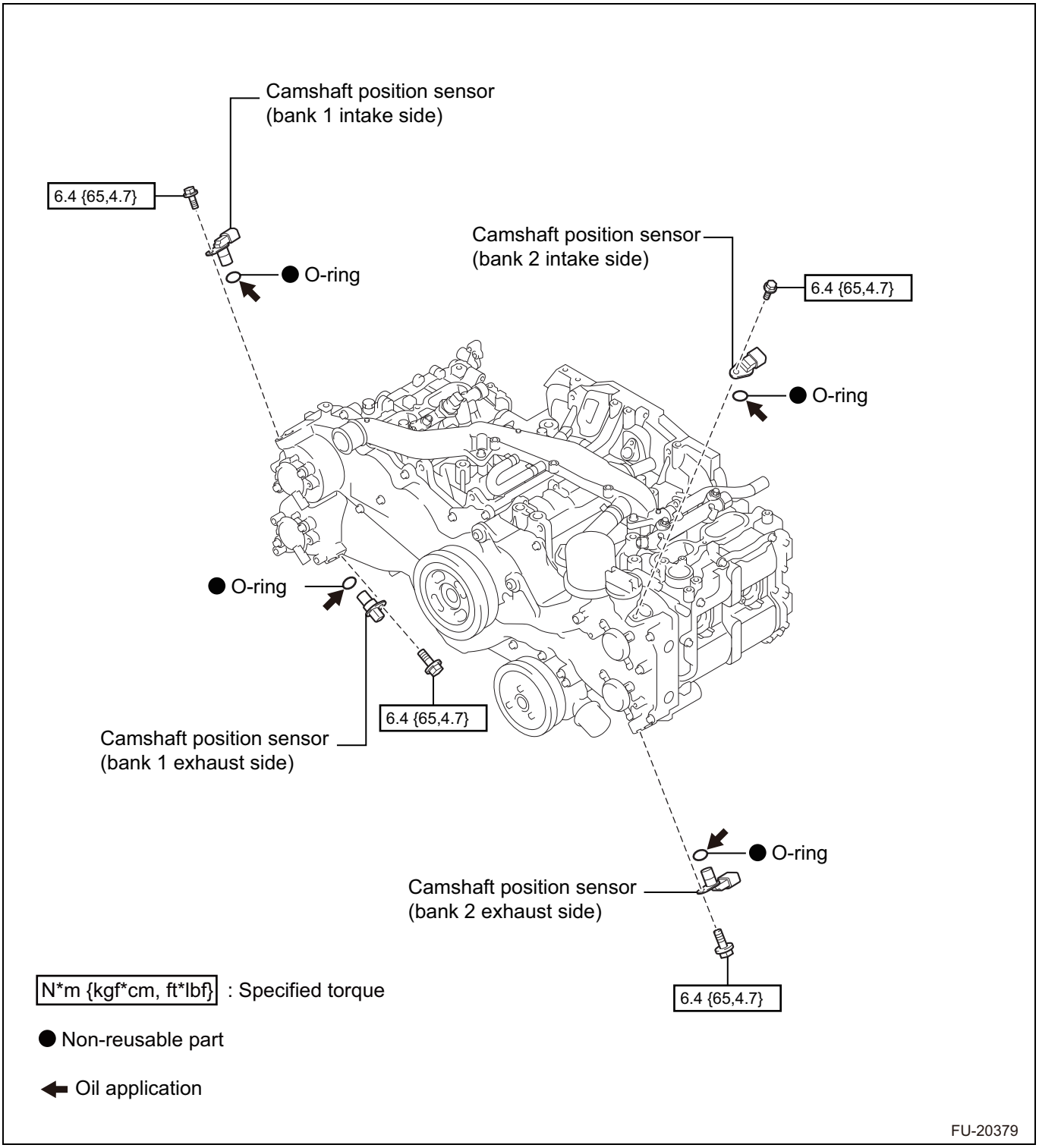

Removal

1. Disconnection of the battery ground terminal (Refer to IN - 6)

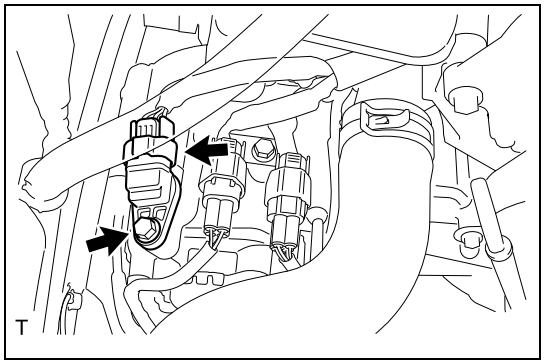

2. Removal of camshaft position sensor (bank 1 intake side)
   (1) Disconnect the connector for camshaft position sensor.
   (2) Remove the bolt, and remove the camshaft position sensor.
   (3) Remove the O-ring from the camshaft position sensor.

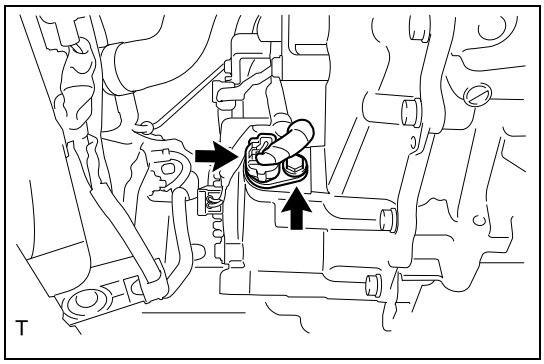

3. Removal of camshaft position sensor (bank 1 exhaust side)
   (1) Disconnect the connector for camshaft position sensor.
   (2) Remove the bolt, and remove the camshaft position sensor.
   (3) Remove the O-ring from the camshaft position sensor.

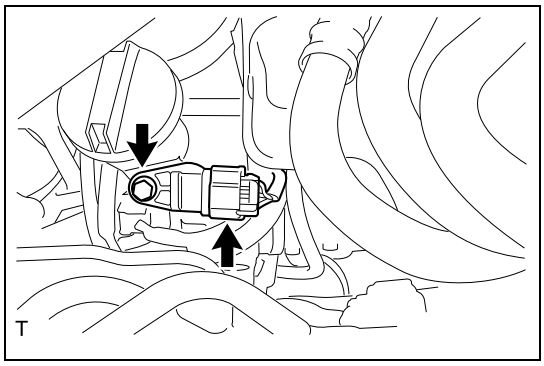

4. Removal of camshaft position sensor (bank 2 intake side)
   (1) Disconnect the connector for camshaft position sensor.
   (2) Remove the bolt, and remove the camshaft position sensor.
   (3) Remove the O-ring from the camshaft position sensor.

5. Removal of under cover front AL (Refer to IE - 39)

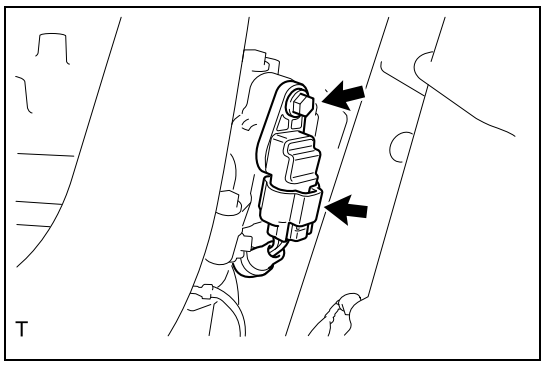

6. Removal of camshaft position sensor (bank 2 exhaust side)
   (1) Disconnect the connector for camshaft position sensor.
   (2) Remove the bolt, and remove the camshaft position sensor.
   (3) Remove the O-ring from the camshaft position sensor.

Installation

1. Installation of camshaft position sensor (bank 2 exhaust side)
   (1) Apply new engine oil to a new O-ring, and attach it to the camshaft timing oil control valve ASSY.
   (2) Using bolt, install the camshaft position sensor.
   Standard value:T=6.4N·m {65kgf·cm} {4.7ft·lbf}
   (3) Connect the connector for camshaft position sensor.
2. Under cover front AL installation (Refer to IE - 46)
3. Installation of camshaft position sensor (bank 2 intake side)
   (1) Apply new engine oil to a new O-ring, and attach it to the camshaft timing oil control valve ASSY.

(2) Using bolt, install the camshaft position sensor.
Standard value:T=6.4N·m {65kgf·cm} {4.7ft·lbf}
(3) Connect the connector for camshaft position sensor.

4. Installation of camshaft position sensor (bank 1 exhaust side)
(1) Apply new engine oil to a new O-ring, and attach it to the camshaft timing oil control valve ASSY.
(2) Using bolt, install the camshaft position sensor.
Standard value:T=6.4N·m {65kgf·cm} {4.7ft·lbf}
(3) Connect the connector for camshaft position sensor.

5. Installation of camshaft position sensor (bank 1 intake side)
(1) Apply new engine oil to a new O-ring, and attach it to the camshaft timing oil control valve ASSY.
(2) Using bolt, install the camshaft position sensor.
Standard value:T=6.4N·m {65kgf·cm} {4.7ft·lbf}
(3) Connect the connector for camshaft position sensor.

6. Connection of the battery ground terminal
Standard value:T=6.0N·m {61kgf·cm} {4.4ft·lbf}

Crankshaft position sensor (FA20)

Exploded view

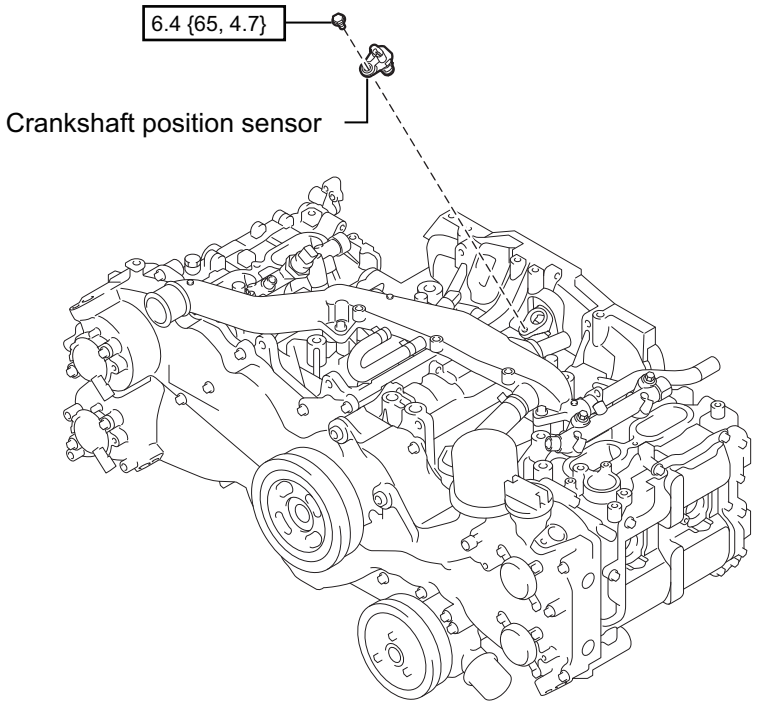

N*m {kgf*cm, ft*lbf}: Tightening torque

FU-20166

Removal

1. Disconnection of the battery ground terminal (Refer to IN - 6)

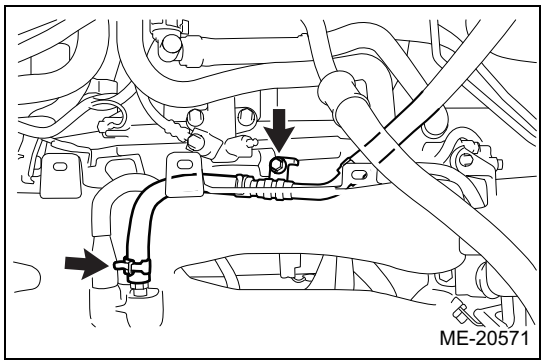

2. Vacuum tube connector hose disconnection (transmission M/T)
   (1) Move the hose clamp and disconnect the vacuum tube connector hose from the intake manifold ASSY.
   (2) Remove the bolt and disconnect the vacuum tube connector hose.

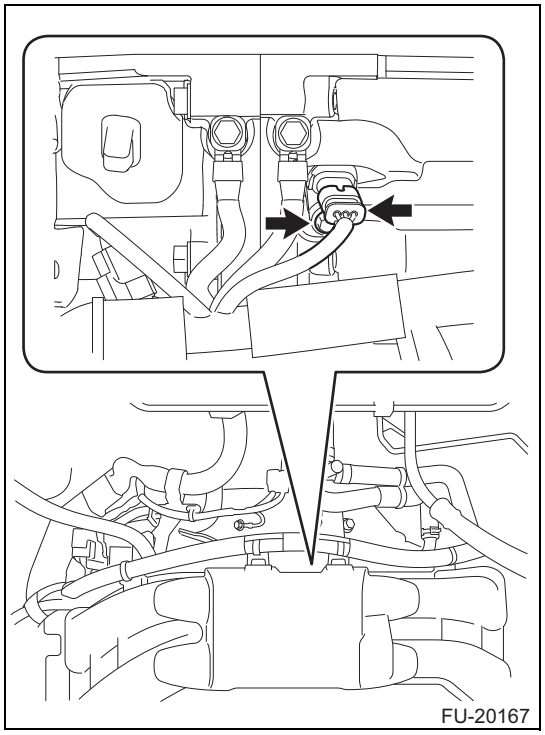

3. Removal of crankshaft position sensor
   (1) Disconnect the crankshaft position sensor connector.
   (2) Remove the bolt, and remove the crankshaft position sensor.

Installation

1. Installation of crankshaft position sensor
   (1) Using bolt, install the crankshaft position sensor.
   Standard value:T=6.4N·m {65kgf·cm} {4.7ft·lbf}
   (2) Connect the connector for crankshaft position sensor.
2. Vacuum tube connector hose connection (transmission M/T)
   (1) Install the vacuum tube connector hose with the bolt.
   Standard value:T=18N·m {184kgf·cm}
3. Connection of the battery ground terminal
   Standard value:T=6.0N·m {61kgf·cm} {4.4ft·lbf}

Ignition coil and spark plug (FA20)

Exploded view

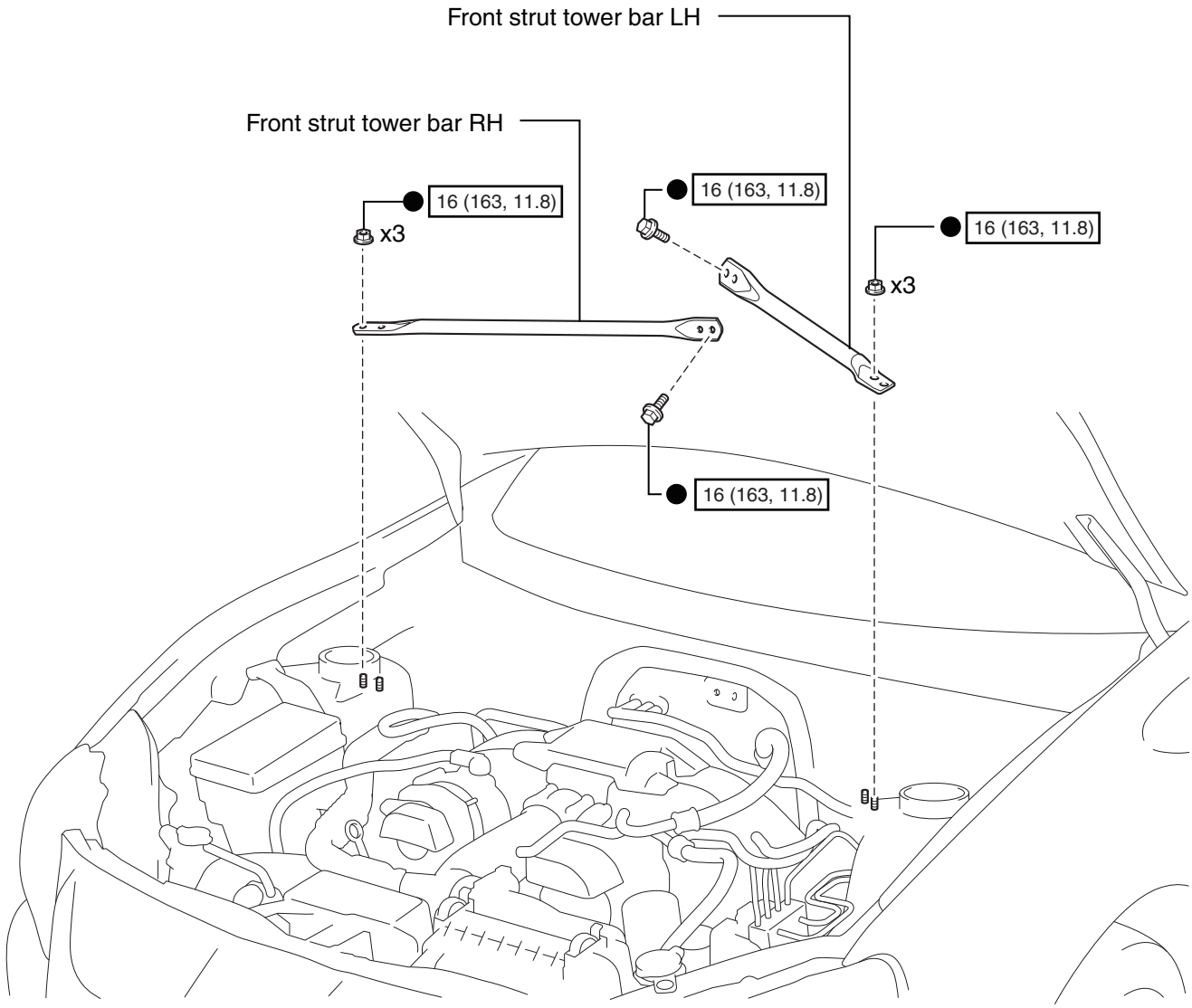

N•m {kgf•cm, ft•lbf} : Tightening torque

● Non-reusable parts

FS-00555

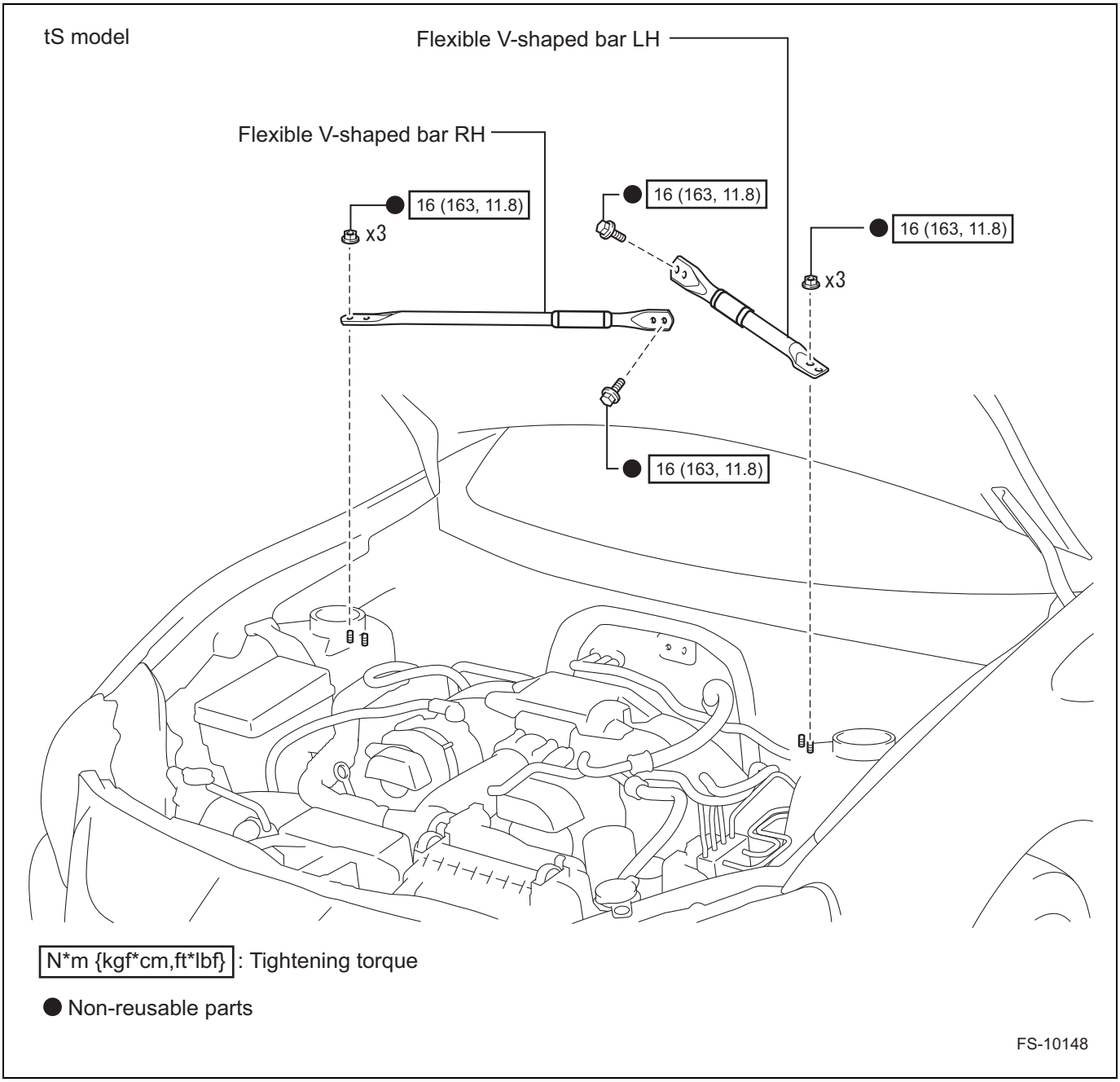

N*m {kgf*cm,ft*lbf} : Tightening torque

● Non-reusable parts

FS-10148

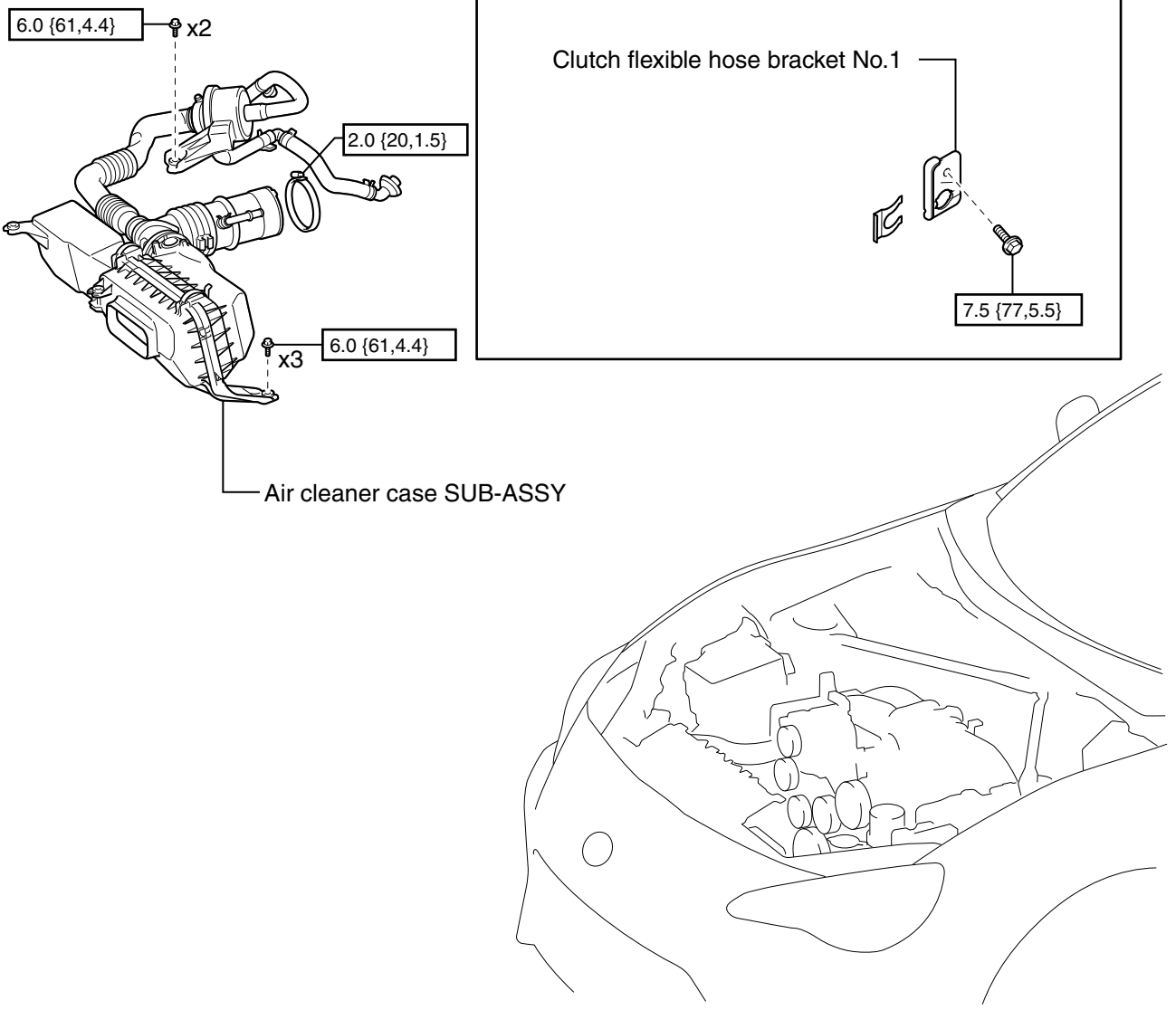

N•m {kgf•cm, ft•lbf} : Tightening torque

FU-07372

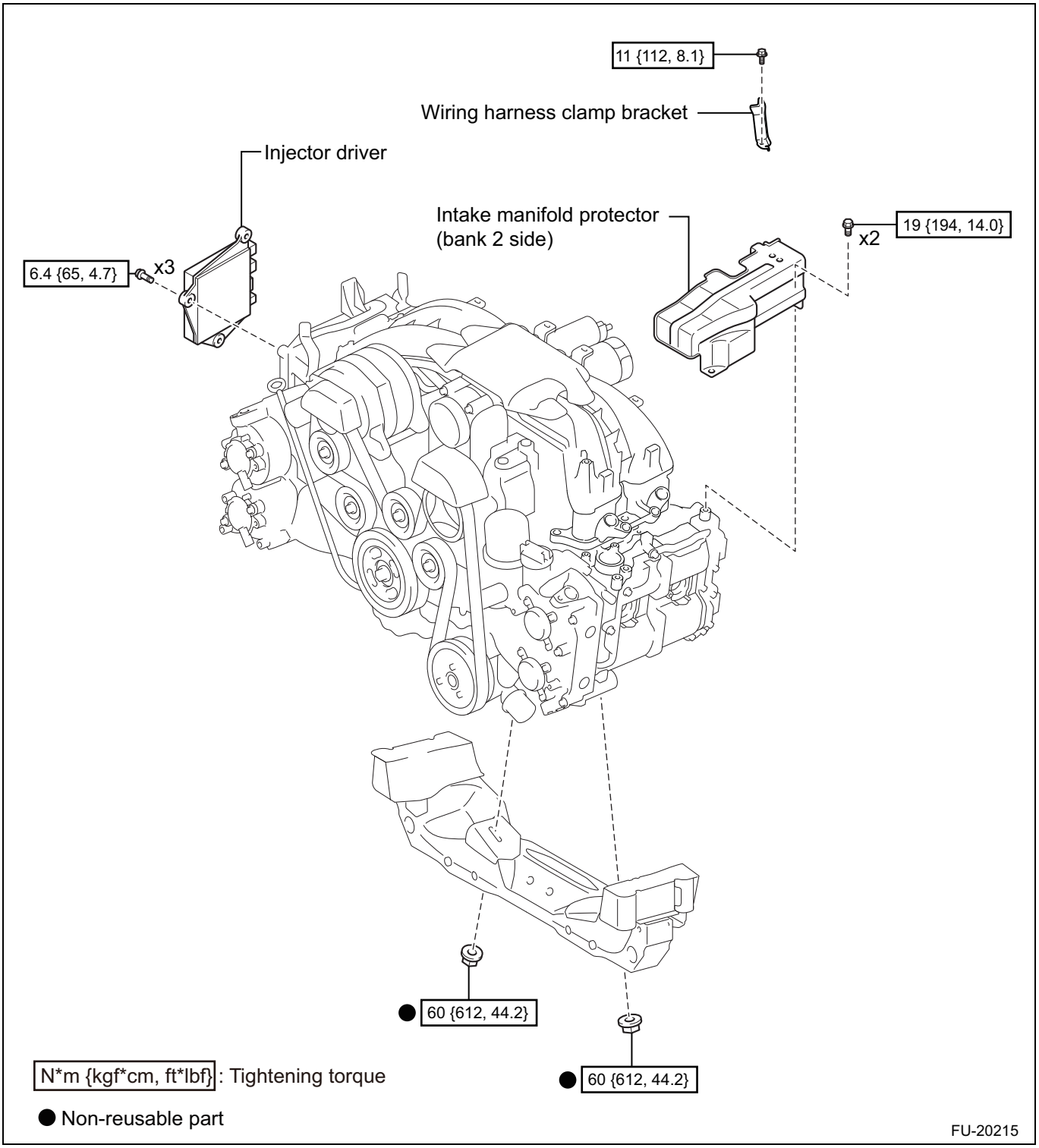
11 {112, 8.1}
Wiring harness clamp bracket
Injector driver
Intake manifold protector
(bank 2 side)
19 {194, 14.0}
x2
6.4 {65, 4.7}
x3
● 60 {612, 44.2}
● 60 {612, 44.2}
N*m {kgf*cm, ft*lbf}: Tightening torque
● Non-reusable part
FU-20215

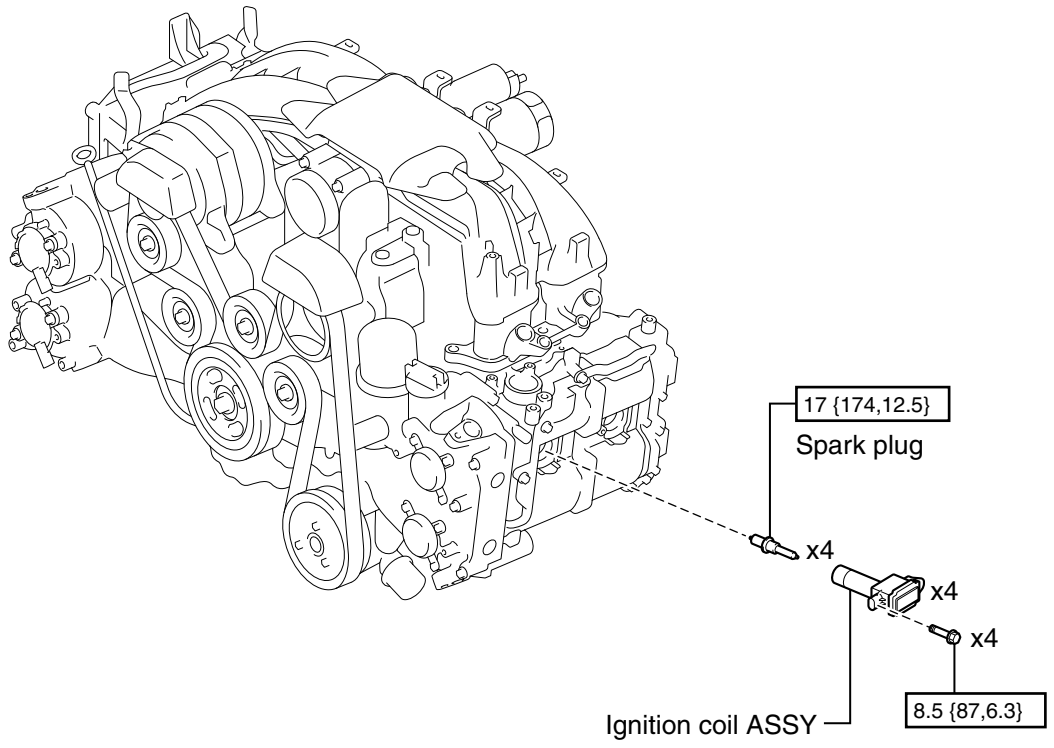

Removal

1. Hood SUB-ASSY setting (Refer to EM - 75)
2. Disconnection of the battery ground terminal (Refer to IN - 6)
3. Front strut tower bar LH removal (Refer to FP - 4)
4. Removal of flexible V-shaped bar LH (tS model) (Refer to FP - 5)
5. Front strut tower bar RH removal (Refer to FP - 5)
6. Removal of flexible V-shaped bar RH (tS model) (Refer to FP - 5)
7. Removal of air cleaner case SUB-ASSY (Refer to EM - 75)

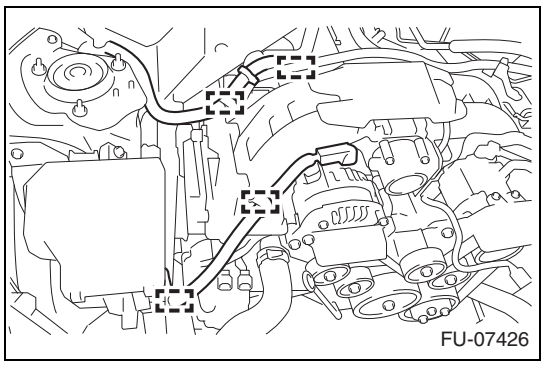

8. Engine wiring disconnection
   (1) Release the four clamps and disconnect the engine wiring.

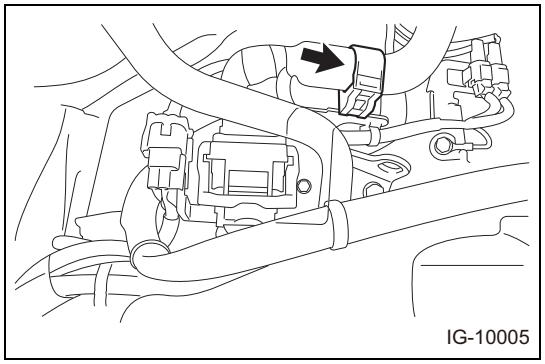

(2) Release the clamp and disconnect the bulkhead harness.

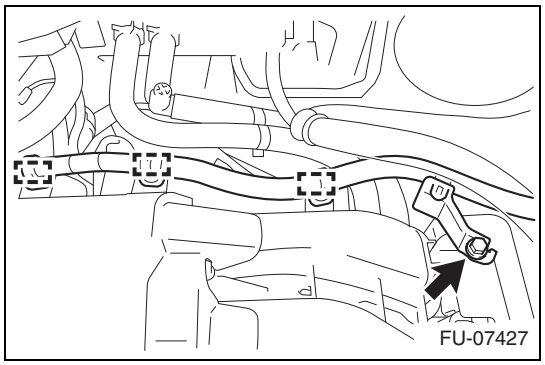

(3) Remove the bolt and three clamps, and then disconnect the engine wiring. (Transmission A/T)

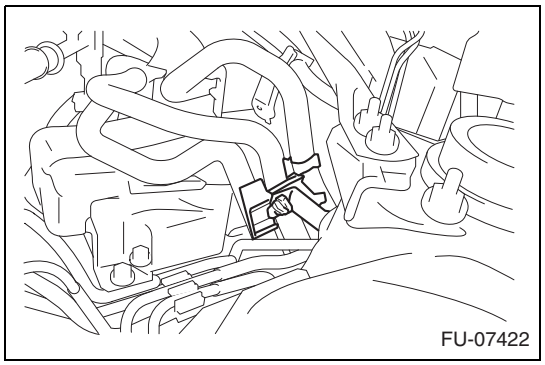

9. Removal of intake manifold protector (bank 2 side)
   (1) Remove the bolt, and disconnect the fuel hose bracket.

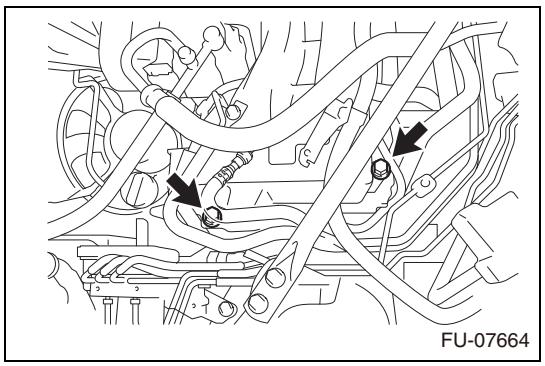

(2) Remove 2 bolts, and remove the intake manifold protector (bank 2 side).

10. Removal of injector driver (Refer to FU - 43)
11. Removal of exhaust manifold (Refer to IE - 35)

12. Disconnection of front crossmember SUB-ASSY

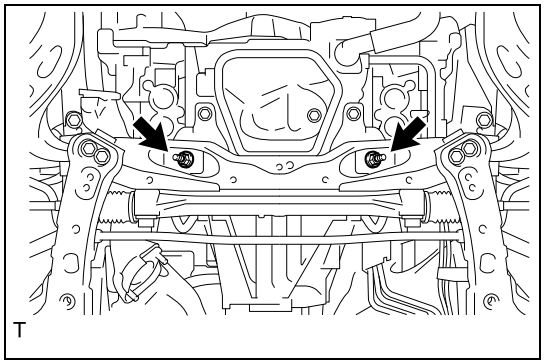

(1) Remove the 2 nuts on the engine mount.

13. Installation of SST

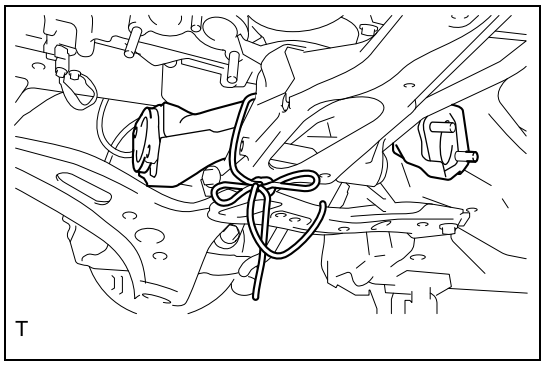

(1) Tie the exhaust pipe SUB-ASSY FR to the front suspension cross-member SUB-ASSY with the rope.
NOTE:
This operation is required to avoid dropping the exhaust pipe SUB-ASSY FR.

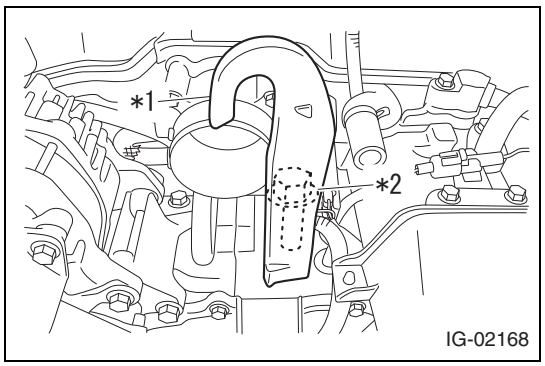

(2) Install the SST to the cylinder block.

Captions in illustration

*1	12281-38150
*2	90119-14120

SST 12281-38150, 90119-14120
Standard value:T=43N·m {439kgf·cm} {31.7ft·lbf}

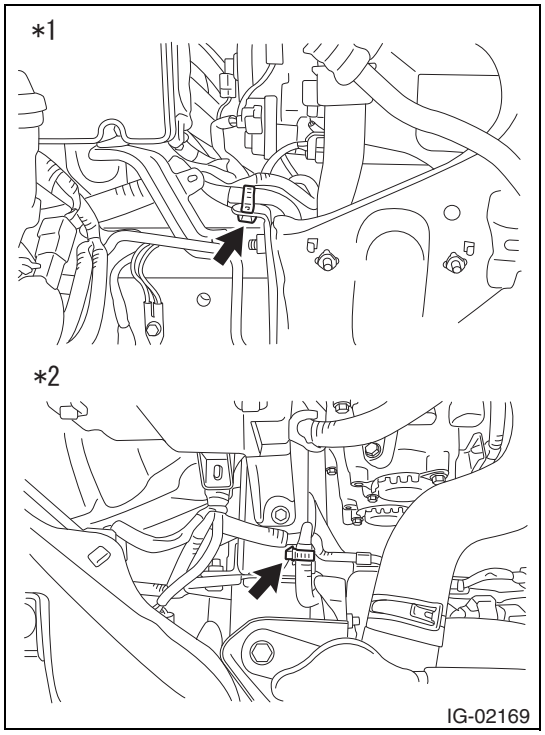

(3) Release the clamp and disconnect the engine wiring.

Captions in illustration

*1	LH
*2	RH

NOTE:
This procedure is required to prevent the engine wiring from damaging.

(4) Install the SST to the vehicle.

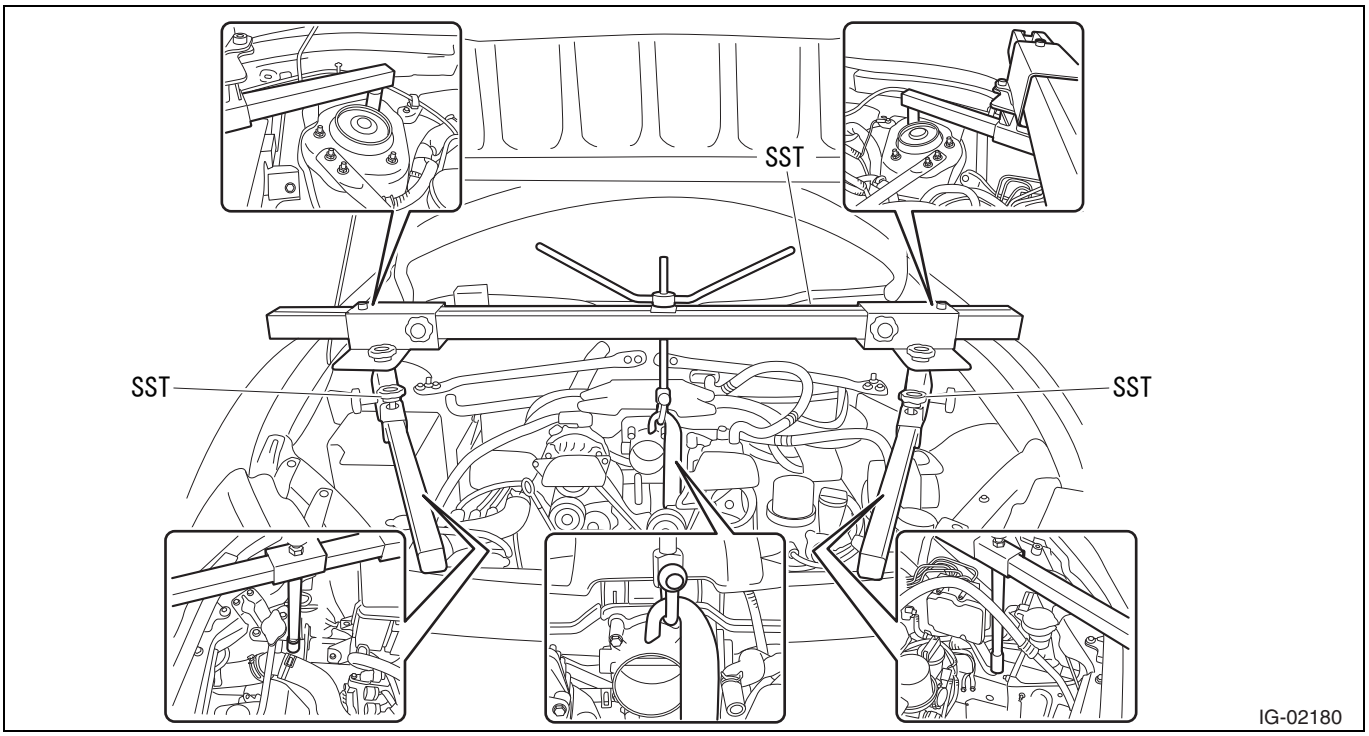

SST 99099AJ000, 18679AA020

CAUTION:
- When installing the SST to the vehicle, do not damage the engine wiring.
- Use a shackle with the load capacity of 250 kg (551 lb) or more.

(5) Lift the engine ASSY a little bit at a time until the stud bolt of the engine mount is removed from the front crossmember.

CAUTION:
- To avoid the damage to the SST, apply grease or lubricant to the threaded portion.
- To avoid the damage to the vehicle and parts, perform lifting operation a little bit at a time while checking the clearance in each part.
- Lift the engine until the intake manifold (#4) slightly comes in contact with the A/C suction hose.
- Insert a cloth between the intake manifold (#4) and the A/C suction hose to protect each part.

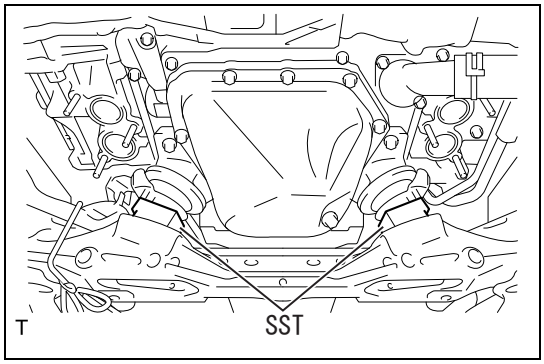

(6) Install the SST between engine mount and front crossmember.
SST 18632AA020

14. Removal of ignition coil ASSY (bank 2 side)
(1) Disconnect 2 connectors for the ignition coil ASSY.
NOTE:
Slide the connectors in the direction of the arrow using a tool such as a clip remover while pressing the spring (a) shown in the figure.

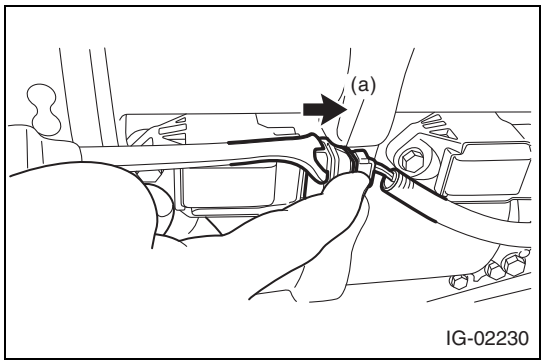

(2) Remove 2 bolts, and remove 2 ignition coil ASSYs.

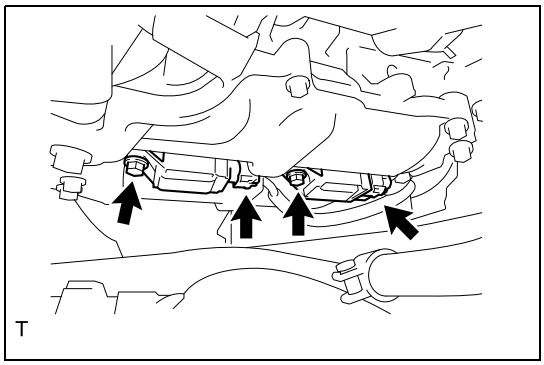

15. Removal of spark plug (bank 2 side)
(1) Remove the two spark plugs.

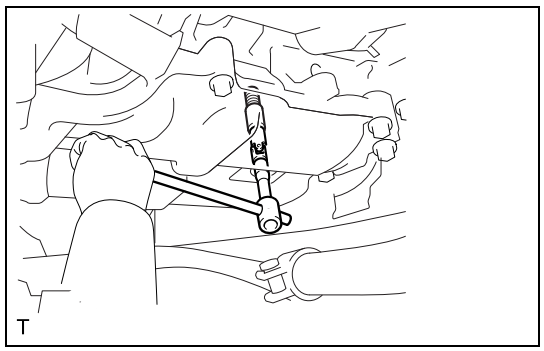

16. Removal of ignition coil ASSY (bank 1 side)
(1) Disconnect 2 connectors for the ignition coil ASSY.
NOTE:
Slide the connectors in the direction of the arrow using a tool such as a clip remover while pressing the spring (a) shown in the figure.

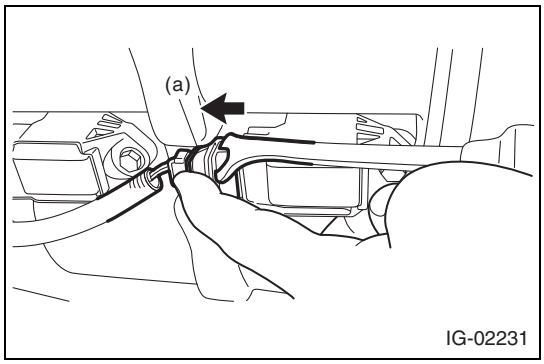

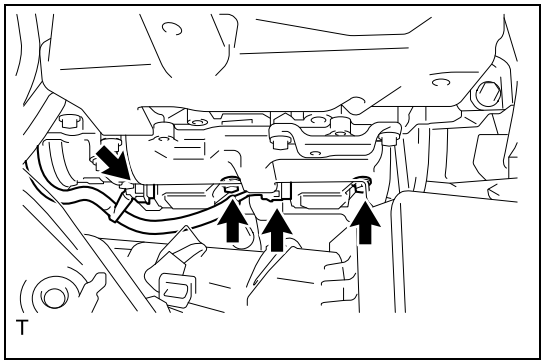

(2) Remove 2 bolts, and remove 2 ignition coil ASSYs.

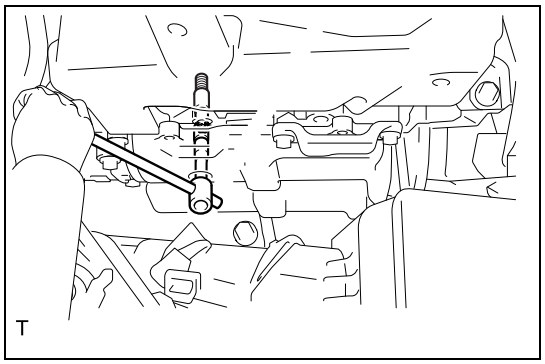

17. Removal of spark plug (bank 1 side)
    (1) Remove the two spark plugs.

Installation

1. Installation of spark plug (bank 1 side)
   (1) Install the two spark plugs.
   Standard value:T=17N·m {174kgf·cm} {12.5ft·lbf}
2. Installation of ignition coil ASSY (bank 1 side)
   (1) Using 2 bolts, install the ignition coil ASSY.
   Standard value:T=8.5N·m {87kgf·cm} {6.3ft·lbf}
   (2) Connect 2 connectors of the ignition coil ASSY.
3. Installation of injector driver (Refer to FU - 44)
4. Installation of spark plug (bank 2 side)
   (1) Install the two spark plugs.
   Standard value:T=17N·m {174kgf·cm} {12.5ft·lbf}
5. Installation of ignition coil ASSY
   (1) Using 2 bolts, install the ignition coil ASSY.
   Standard value:T=8.5N·m {87kgf·cm} {6.3ft·lbf}
   (2) Connect 2 connectors of the ignition coil ASSY.
6. Installation of intake manifold protector (bank 2 side)
   (1) Using 2 bolts, install the intake manifold protector (bank 2 side).
   Standard value:T=19N·m {194kgf·cm} {14.0ft·lbf}
   (2) Install the fuel hose bracket.
   Standard value:T=7.5N·m {76kgf·cm} {5.5ft·lbf}
7. Removal of SST
   (1) Using the SST, lift the engine ASSY.
   SST 99099AJ000, 18679AA020

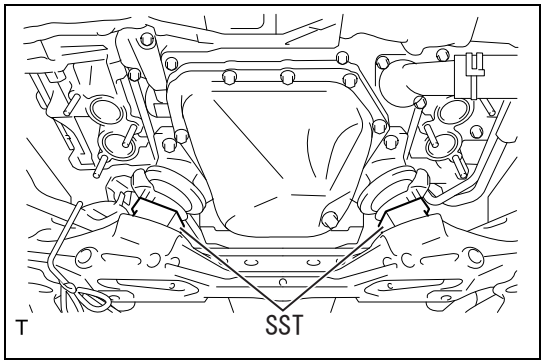

(2) Remove the SST.
SST 18632AA020

8. Connection of front crossmember SUB-ASSY

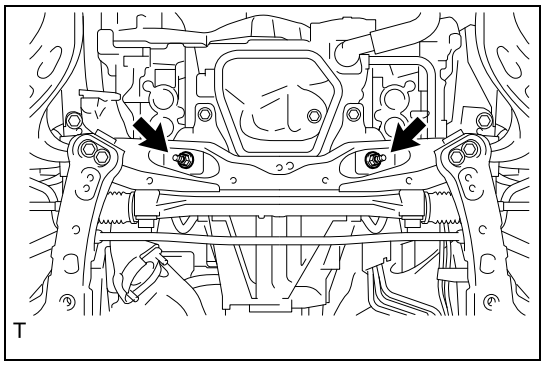

(1) Install the two nuts of the new engine mounting.
Standard value:T=60N·m {612kgf·cm} {44.2ft·lbf}

(2) Remove the rope which secures the joint pipe to the front suspension crossmember SUB-ASSY.

9. Removal of SST
   (1) Remove the SST from the vehicle.
   SST 99099AJ000, 18679AA020
   (2) Remove the SST from the cylinder block.
   SST 12281-38150, 90119-14120

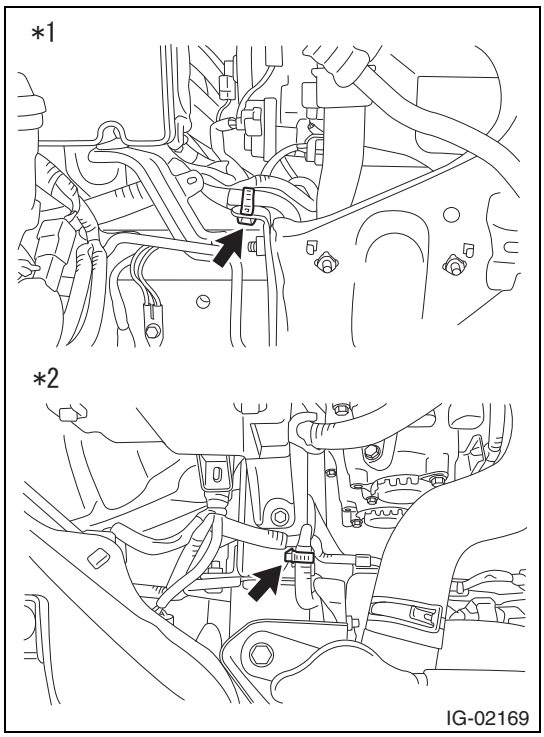

(3) Connect the engine wiring with the clamp.

Captions in illustration

*1	LH
*2	RH

10. Installation of exhaust manifold (Refer to IE - 36)

11. Engine wiring connection
   (1) Connect the engine wiring with the bolt and three clamps. (Transmission A/T)

Standard value:T=11N·m {112kgf·cm} {8.1ft·lbf}

(2) Using the clamp, connect the bulkhead harness.

(3) Using 4 clamps, connect the engine wire.

12. Installation of air cleaner case SUB-ASSY (Refer to EM - 114)
13. Installation of front strut tower bar LH (Refer to FP - 5)
14. Installation of flexible V-shaped bar LH (tS model) (Refer to FP - 5)
15. Installation of front strut tower bar RH (Refer to FP - 5)
16. Installation of flexible V-shaped bar RH (tS model) (Refer to FP - 5)
17. Connection of the battery ground terminal
    Standard value:T=6.0N·m {61kgf·cm} {4.4ft·lbf}
18. Shift lever position check (transmission A/T) (Refer to AT - 210)
19. Hood SUB-ASSY setting (Refer to EM - 115)

Engine coolant temperature sensor (FA20)

Exploded view

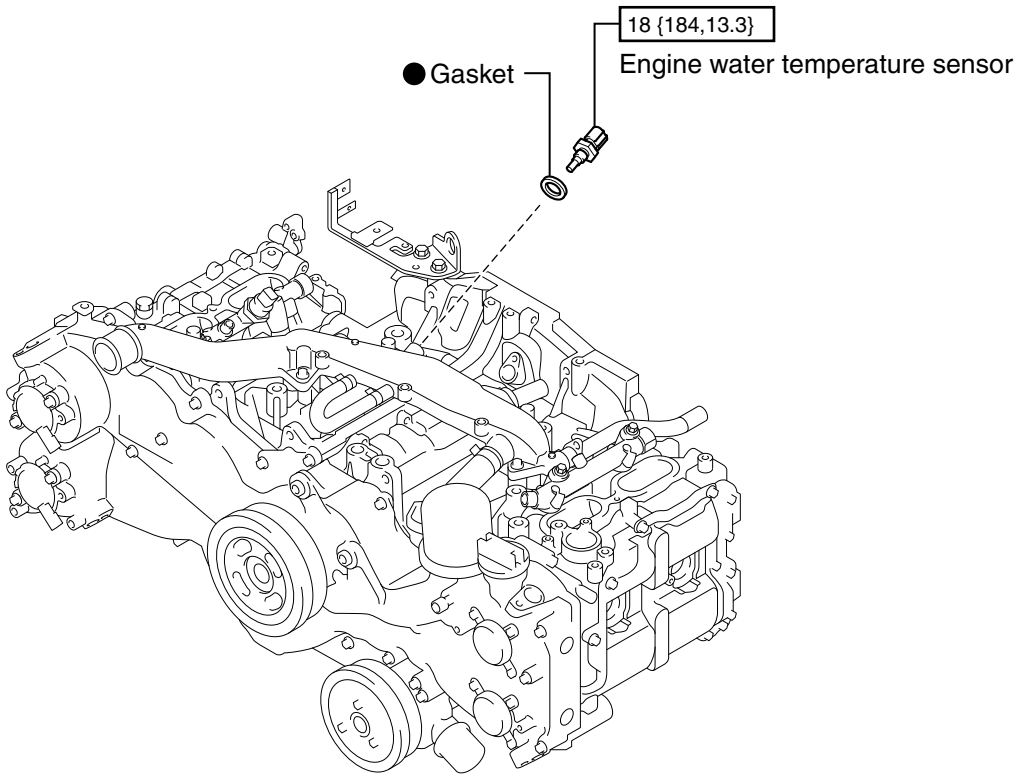

N•m {kgf•cm, ft•lbf} : Tightening torque ● Non-reusable parts

FU-07375

Removal

1. Disconnection of the battery ground terminal (Refer to IN - 6)
2. Draining of coolant (SUBARU Super Coolant) (Refer to CO - 16)
3. Removal of intake manifold (Refer to IE - 17)

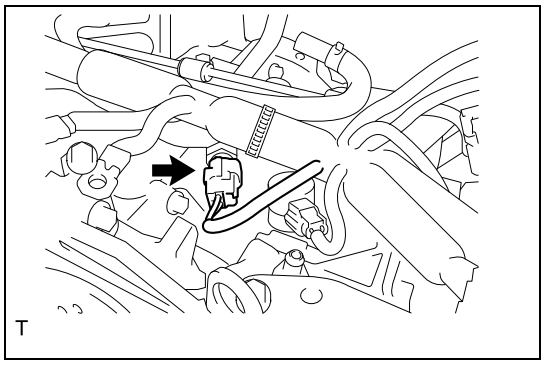

4. Removal of engine water temperature sensor
   (1) Disconnect the connector for engine water temperature sensor.

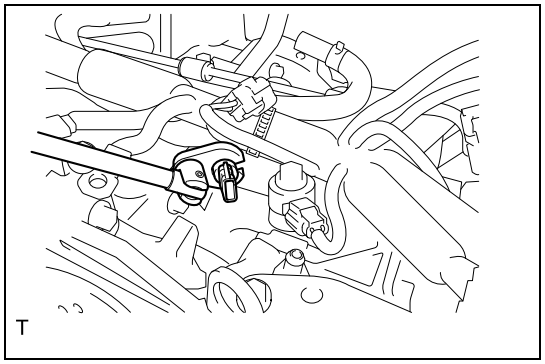

(2) Remove the engine water temperature sensor and gasket.

ES

Installation

1. Installation of engine water temperature sensor
   (1) Using a new gasket, install the engine water temperature sensor.
   Standard value:T=18N·m {184kgf·cm} {13.3ft·lbf}
   CAUTION:
   The torque wrench may be combined with the union nut wrench to extend its length for tightening operation. In this case, if it is tightened to the specified torque indicated on the torque wrench, the actual tightening torque exceeds the specification. (Refer to IN - 6)
   (2) Connect the connector for engine water temperature sensor.
2. Installation of intake manifold (Refer to IE - 28)
3. Connection of the battery ground terminal
   Standard value:T=6.0N·m {61kgf·cm} {4.4ft·lbf}
4. Replenishing of coolant (SUBARU Super Coolant) (Refer to CO - 16)
5. Leak check of coolant (SUBARU Super Coolant) (Refer to CO - 2)

Unit inspection

1. Inspection of engine water temperature sensor

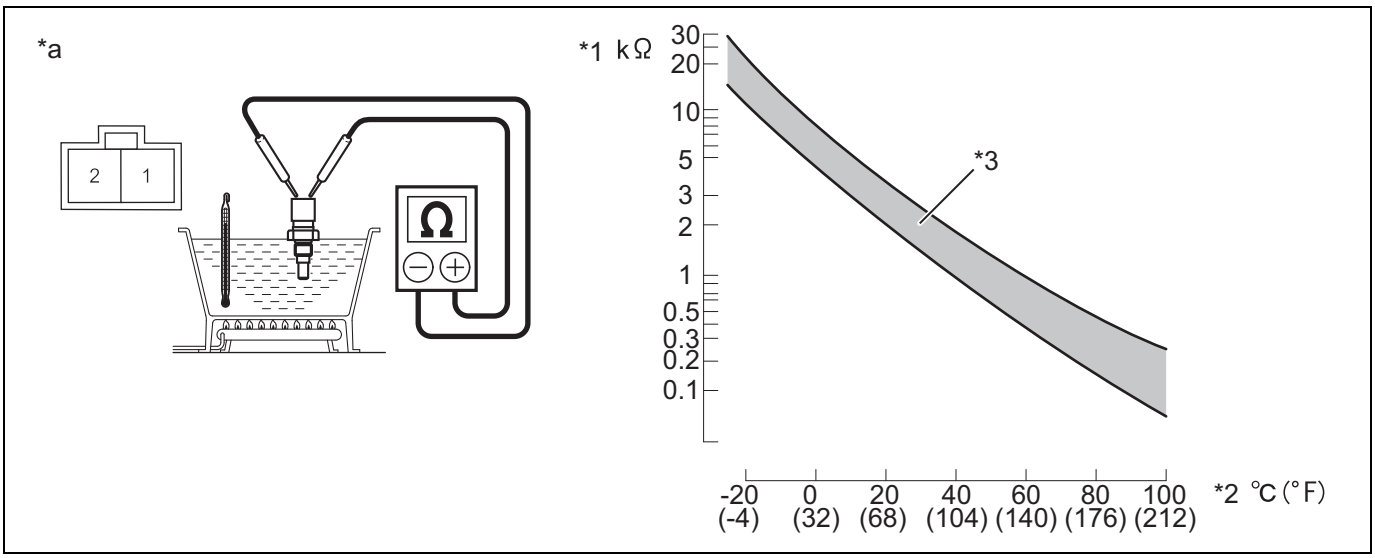

Text in Illustration

*1	Resistance	*2	Temperature
*3	Acceptable	-	-
*a	Component without harness connected (Engine Coolant Temperature Sensor)	-	-

(1) Measure the resistance between the terminals.
Resistance

Inspection terminals	Inspection conditions	Standard value
1 - 2	Approx. 20°C {68°F}	2.25 to 2.65kΩ
	Approx. 80°C {176°F}	0.305 to 0.331kΩ

CAUTION:
When the inspection is performed with the sensor immersed in water, be careful not to allow the ingress of water into the terminal part. After inspection is completed, wipe off the water drops from the sensor.

Engine oil temperature sensor (FA20)

Exploded view

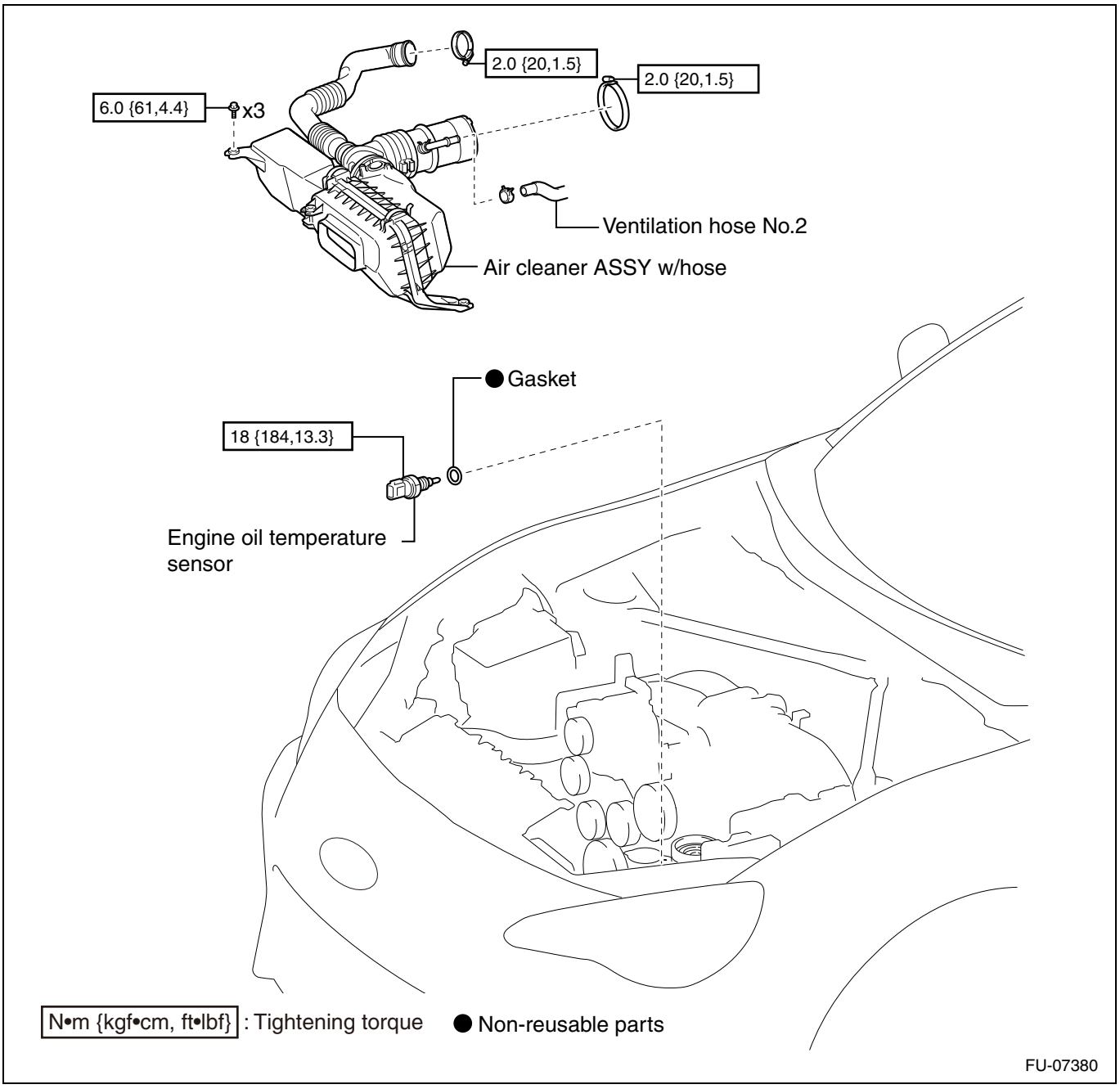

Removal

1. Disconnection of the battery ground terminal (Refer to IN - 6)
2. Removal of air cleaner case SUB-ASSY (Refer to EM - 5)
3. Engine oil temperature sensor removal
   (1) Disconnect the connector for the engine oil temperature sensor.

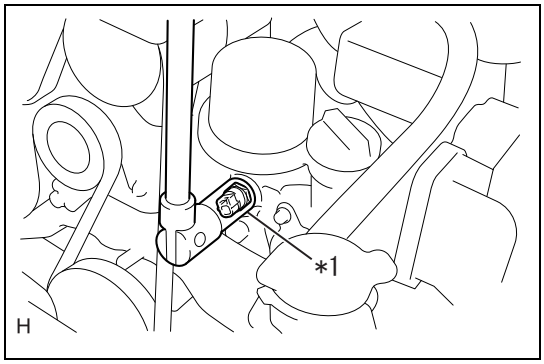

(2) Remove the engine oil temperature sensor.

Captions in illustration

*1	Deep socket wrench

ES

Installation

1. Engine oil temperature sensor installation
   (1) Install a new gasket to the engine oil temperature sensor.
   (2) Install the engine oil temperature sensor.
   Standard value:T=18N·m {184kgf·cm} {13.3ft·lbf}
   (3) Connect the connector of engine oil temperature sensor.
2. Installation of air cleaner case SUB-ASSY (Refer to EM - 8)
3. Connection of the battery ground terminal
   Standard value:T=6.0N·m {61kgf·cm} {4.4ft·lbf}
4. Engine oil leakage check (Refer to LU - 6)

Unit inspection

1. Engine oil temperature sensor check

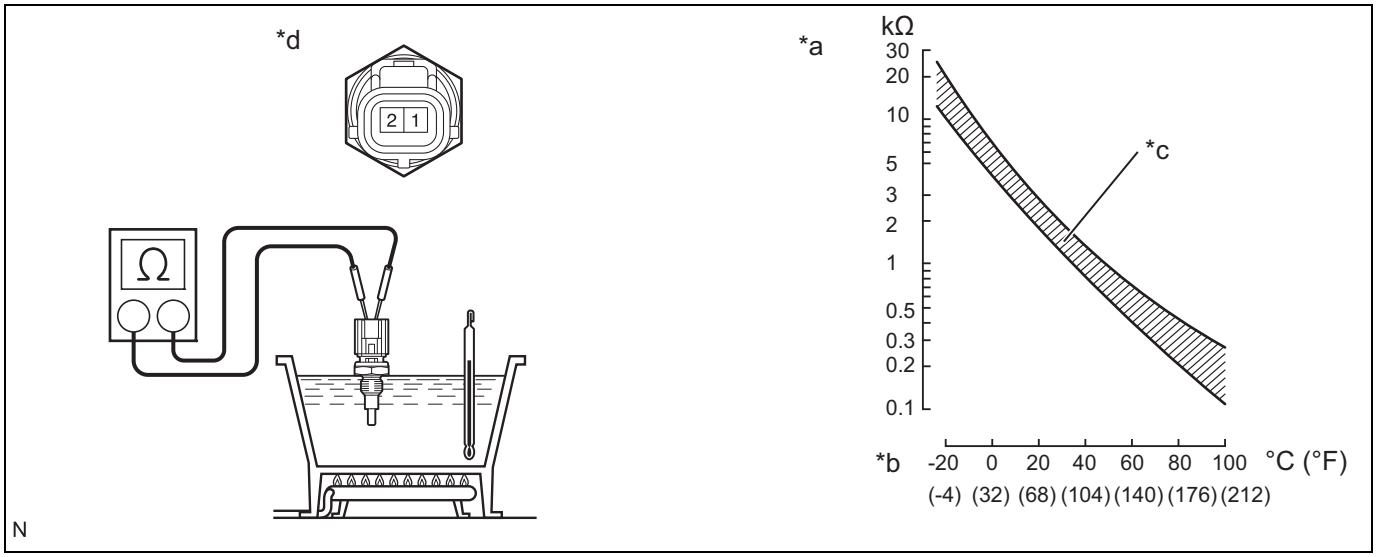

Text in Illustration

*a	Resistance	*b	Temperature
*c	Acceptable	*d	Component without harness connected (Engine oil Temperature Sensor)

(1) Resistance check
(a)Measure the resistance between the terminals.

Resistance

Inspection terminals	Inspection conditions	Standard value
1 - 2	Approx. 20°C {68°F}	2.25 to 2.65kΩ
	Approx. 80°C {176°F}	0.305 to 0.331kΩ

CAUTION:
When the inspection is performed with the sensor immersed in water, be careful not to allow the ingress of water into the terminal part. After inspection is completed, wipe off the water drops from the sensor.

Knock control sensor (FA20)

Exploded view

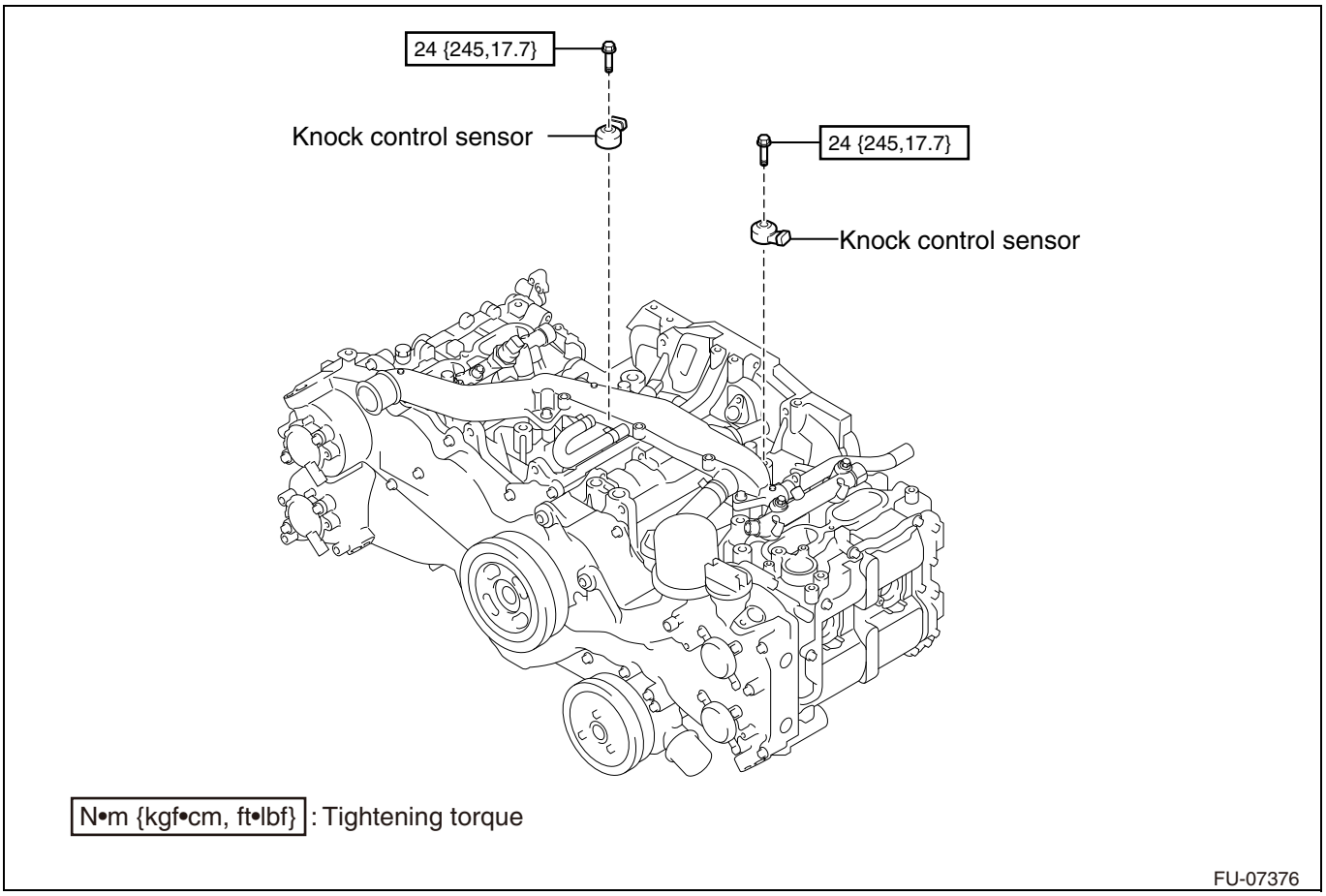

Removal

1. Disconnection of the battery ground terminal (Refer to IN - 6)
2. Removal of intake manifold (Refer to IE - 17)

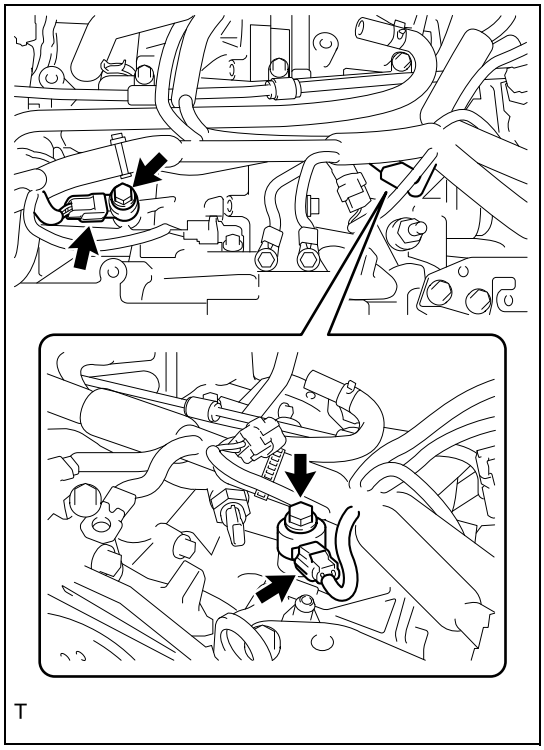
T

3. Removal of knock control sensor
   (1) Disconnect 2 connectors for knock control sensor.
   (2) Remove 2 bolts, and remove the 2 knock control sensors.

Installation

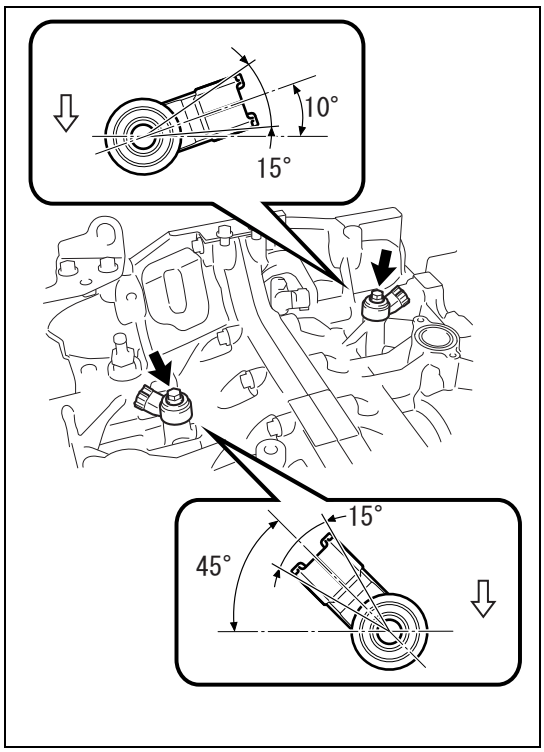

1. Installation of knock control sensor
   (1) Using 2 bolts, install the knock control sensor in the direction shown in the figure.
   Standard value:T=24N·m {245kgf·cm} {17.7ft·lbf}

Captions in illustration

⇨	Front of engine

   (2) Connect 2 connectors for knock control sensor.

2. Installation of intake manifold (Refer to IE - 28)
3. Connection of the battery ground terminal
   Standard value:T=6.0N·m {61kgf·cm} {4.4ft·lbf}

Unit inspection

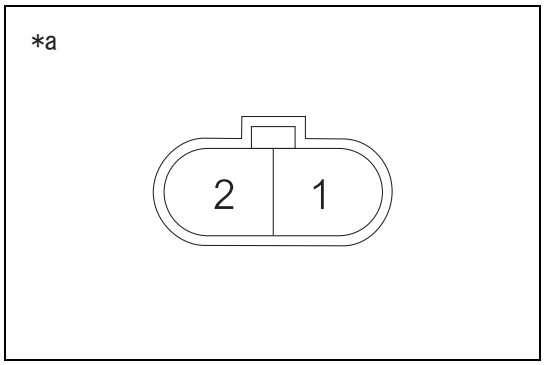

1. Inspection of knock control sensor
   (1) Measure the resistance between the terminals.
   Resistance

Inspection terminals	Inspection conditions	Standard value
1 - 2	20°C {68°F}	532 to 588kΩ

Captions in illustration

*a	Connector not connected (knock control sensor)

Vacuum sensor ASSY (FA20)

Exploded view

Transmission A/T:

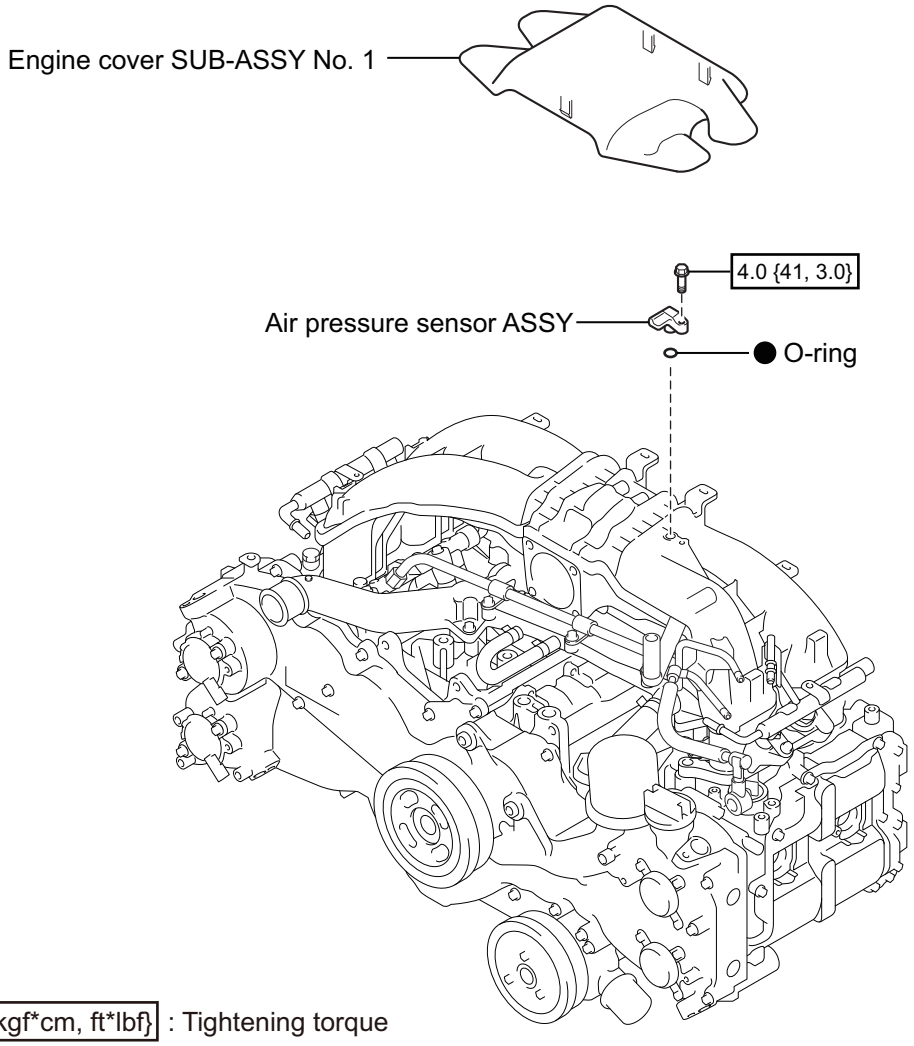

N*m {kgf*cm, ft*lbf} : Tightening torque

● Non-reusable part

FU-20168

ES

Transmission M/T:

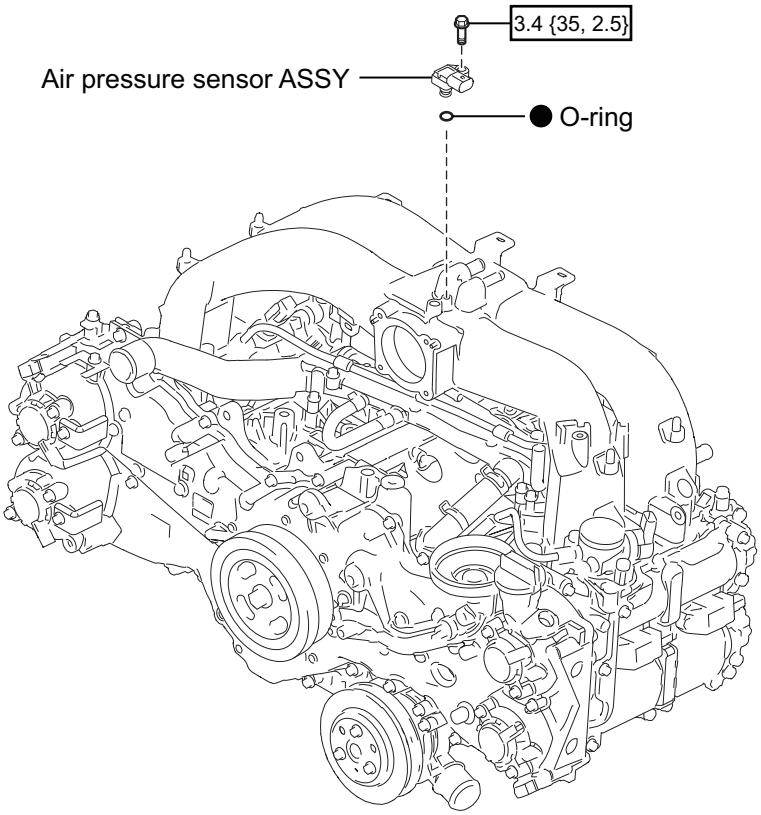

N*m {kgf*cm, ft*lbf}: Tightening torque

● Non-reusable part

FU-20169

Removal

1. Disconnection of the battery ground terminal (Refer to IN - 6)
2. Removal of engine cover SUB-ASSY No.1 (Refer to IE - 16)

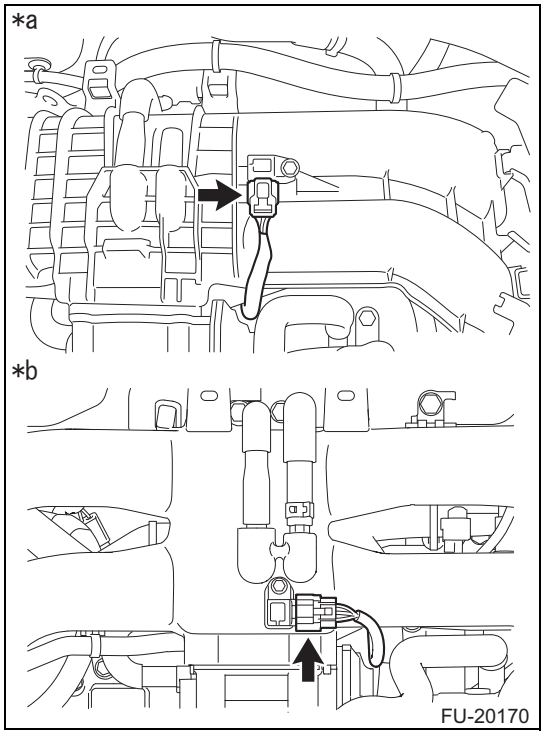

3. Removal of air pressure sensor ASSY

(1) Disconnect the connector for air pressure sensor ASSY.

Captions in illustration

*a	Transmission A/T
*b	Transmission M/T

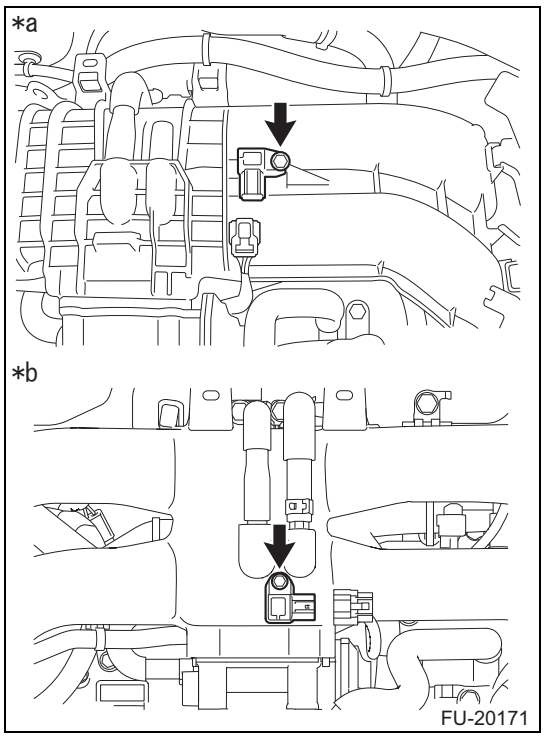

(2) Remove the bolt, and remove the air pressure sensor ASSY.

Captions in illustration

*a	Transmission A/T
*b	Transmission M/T

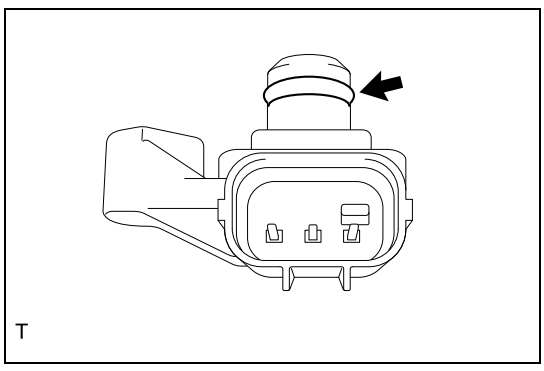

(3) Remove the O-ring from the air pressure sensor ASSY.

Installation

1. Installation of air pressure sensor ASSY
   (1) Attach a new O-ring to the air pressure sensor ASSY.
   (2) Apply engine oil to the O-ring.
   (3) Using bolt, install the air pressure sensor ASSY. (Transmission A/T)
   Standard value:T=4.0N·m {41kgf·cm} {3.0 ft·lbf} (Transmission A/T)
   T=3.4N·m {35kgf·cm} {2.5 ft·lbf} (Transmission M/T)
   (4) Connect the connector for air pressure sensor ASSY.
2. Installation of engine cover SUB-ASSY No. 1 (Refer to IE - 28)
3. Connection of the battery ground terminal
   Standard value:T=6.0N·m {61kgf·cm} {4.4ft·lbf}

On-vehicle inspection

1. Inspection of air pressure sensor ASSY
   (1) Connect the SSM4 to the DLC.
   (2) Turn the ignition switch to ON with engine stopped.
   (3) Select the following menu items using the SSM4: [Data monitor] →[Atmosphere Pressure]
   (4) Read the data monitor.
   Criteria: Almost equal to atmospheric pressure
   NOTE:
   - Standard atmospheric pressure is 101 kPa {758 mmHg, 29.8 inHg, 14.6 psig}.
   - Atmospheric pressure decreases by 1 kPa {8 mmHg, 0.3 inHg, 0.1 psig} as the altitude increases by 100 m {328 ft}.
   - Atmospheric pressure varies according to the weather.

Air / fuel ratio sensor (FA20)

Exploded view

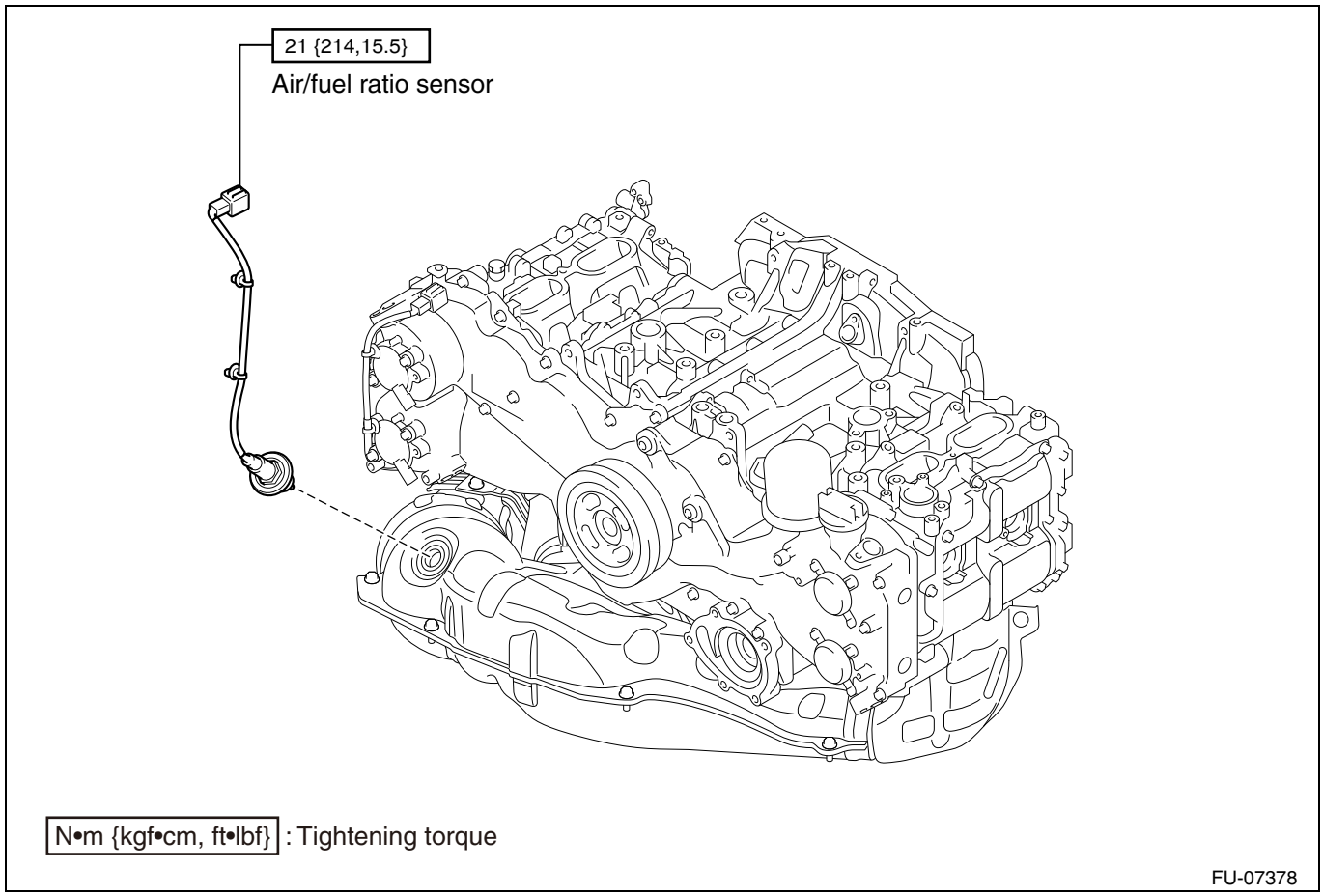

Removal

1. Disconnection of the battery ground terminal (Refer to IN - 6)

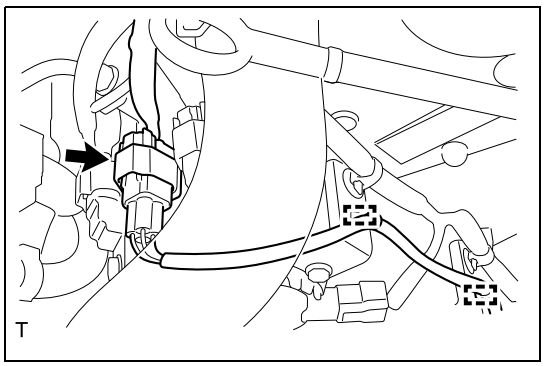

2. Removal of air/fuel ratio sensor
   (1) Disconnect the connector for air/fuel ratio sensor and the 2 clamps.

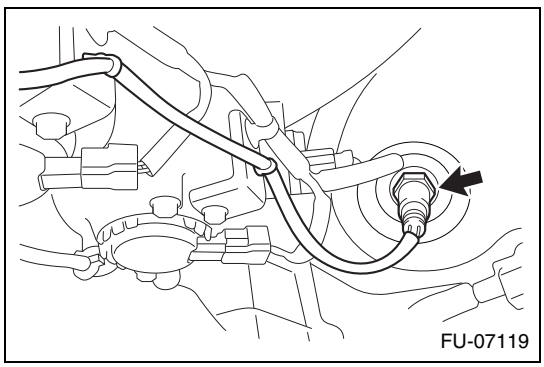

   (2) Remove the air/fuel ratio sensor from the exhaust manifold.

Installation

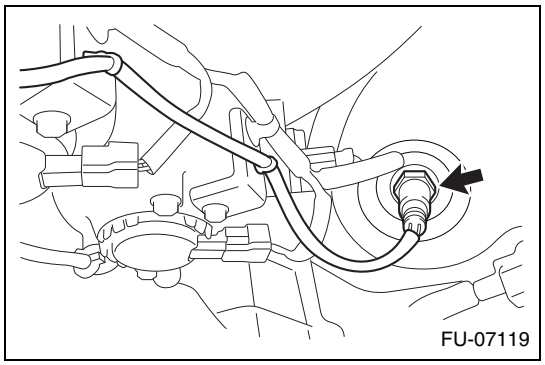

1. Installation of air/fuel ratio sensor
   (1) Install the air/fuel ratio sensor to the exhaust manifold.
   Standard value:T=21N·m {214kgf·cm} {15.5ft·lbf}
   (2) Connect the connector for air/fuel ratio sensor and the 2 clamps.
2. Connection of the battery ground terminal
   Standard value:T=6.0N·m {61kgf·cm} {4.4ft·lbf}
3. Exhaust gas leakage check (Refer to IE - 46)

Unit inspection

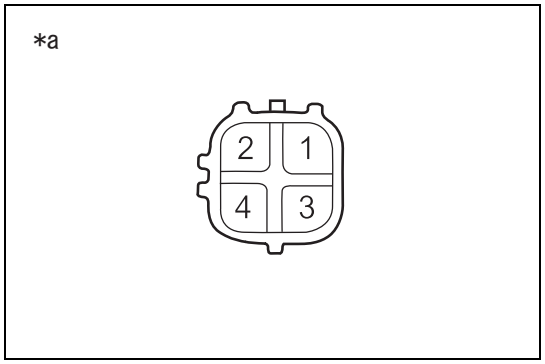

1. Inspection of air/fuel ratio sensor
   (1) Measure the resistance between the terminals.
   Resistance

Inspection terminals	Inspection conditions	Standard value
1 - 2	20°C {68°F}	1.98 to 2.64Ω
1 - 4	Always	10 k Ωor more

Captions in illustration

*a	Connector not connected (air/fuel ratio sensor)

Oxygen sensor (FA20)

Exploded view

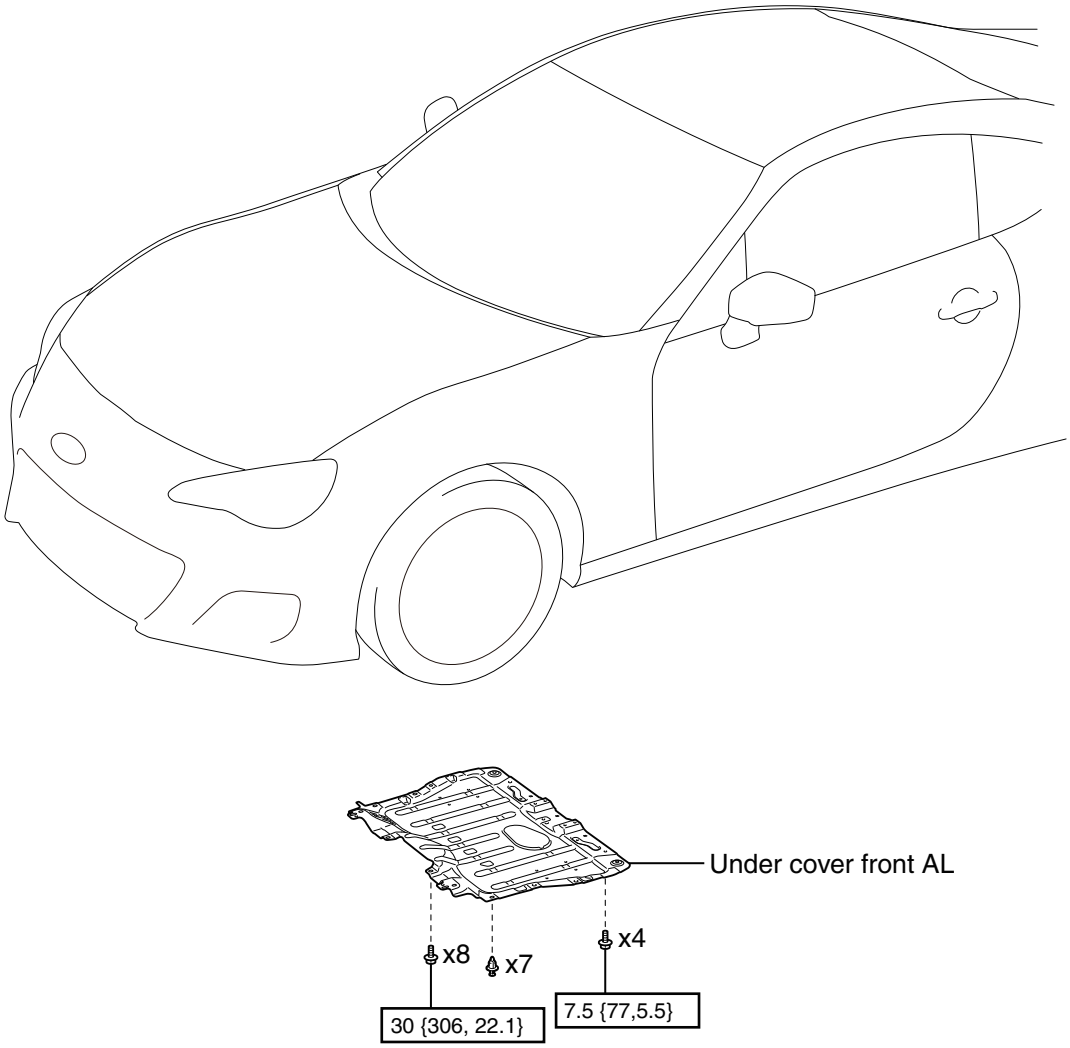

N•m {kgf•cm, ft•lbf}: Tightening torque

FU-07971

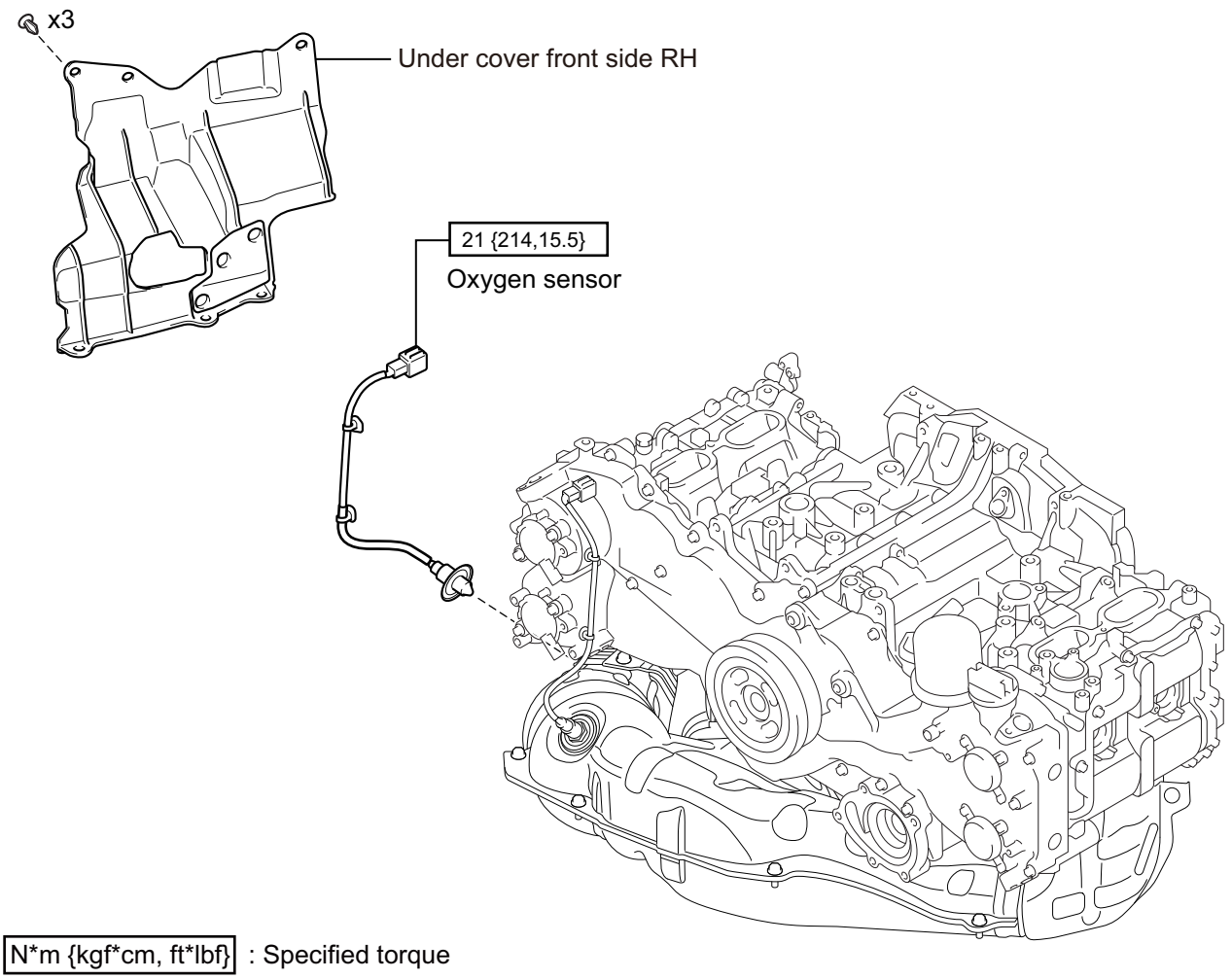

Removal

1. Disconnection of the battery ground terminal (Refer to IN - 6)
2. Removal of front tire RH
3. Removal of under cover front AL (Refer to IE - 39)

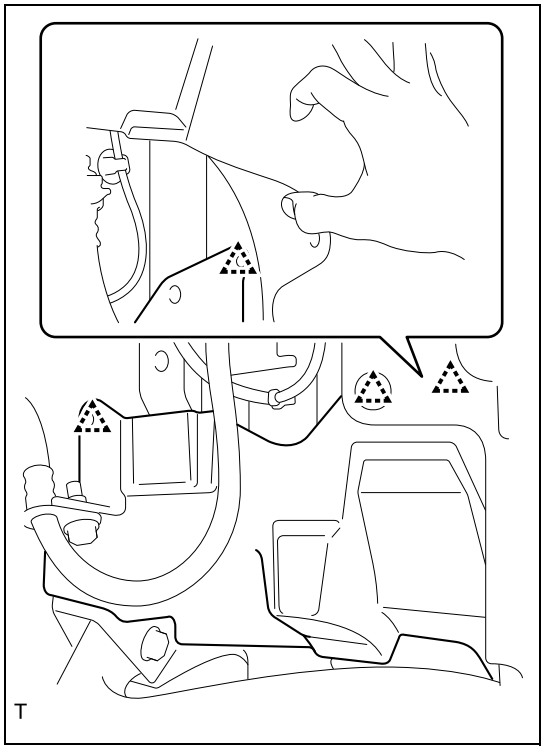

4. Disconnection of under cover front side RH
   (1) Remove 3 clips, and disconnect the under cover front side RH.

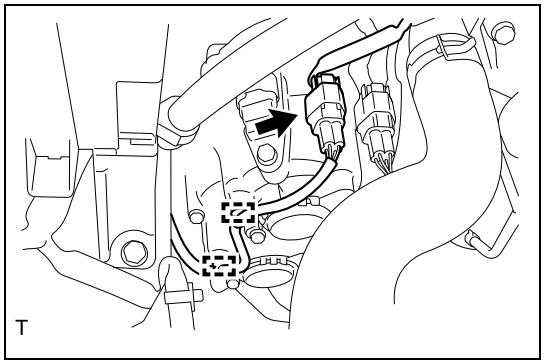

5. Removal of oxygen sensor
   (1) Disconnect the connector for oxygen sensor and the 2 clamps.

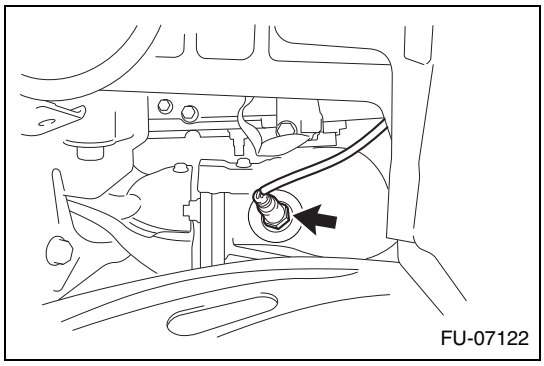

   (2) Remove the oxygen sensor from the exhaust manifold.

Installation

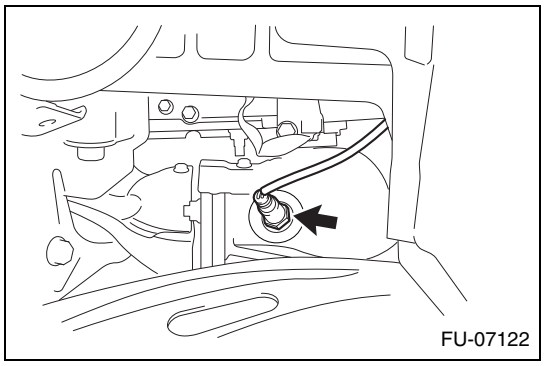

1. Installation of oxygen sensor
   (1) Install the oxygen sensor to the exhaust manifold.
   Standard value:T=21N·m {214kgf·cm} {15.5ft·lbf}
   (2) Connect the connector for oxygen sensor and the 2 clamps.
2. Exhaust gas leakage check (Refer to IE - 46)
3. Installation of under cover front side RH
   (1) Using 3 clips, install the under cover front side RH.
4. Under cover front AL installation (Refer to IE - 46)
5. Installation of front tire RH (Refer to FB - 21)
6. Connection of the battery ground terminal
   Standard value:T=6.0N·m {61kgf·cm} {4.4ft·lbf}

Unit inspection

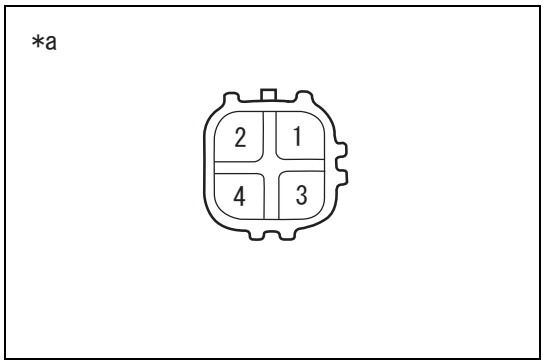

1. Inspection of oxygen sensor
   (1) Measure the resistance between the terminals.
   Resistance

Inspection terminals	Inspection conditions	Standard value
1 - 2	20°C {68°F}	5.0 to 6.4Ω
1 - 4	Always	10 k Ωor more

Captions in illustration

*a	Connector not connected (oxygen sensor)

Relay

Unit inspection

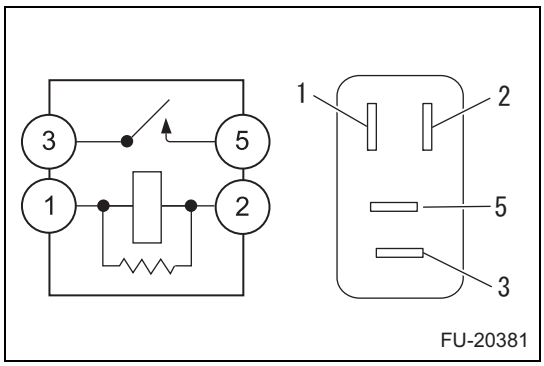

1. Inspection of IG2 relay (IG2)
   (1) Measure the resistance between the terminals.
   Resistance

Inspection terminals	Inspection conditions	Standard value
3 - 5	When the battery voltage is not applied to the terminal 1 and terminal 2:	10 k Ωor more
3 - 5	When the battery voltage is applied to the terminal 1 and terminal 2:	Less than 1 Ω

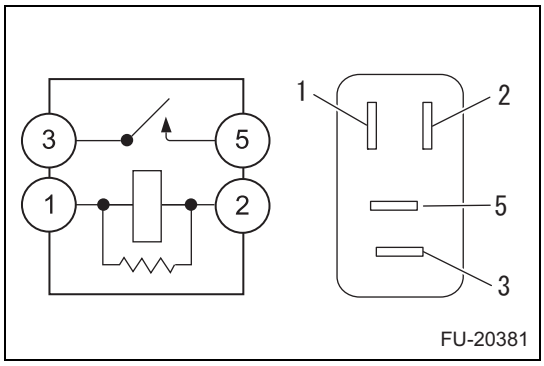

2. Inspection of EFI relay (EFI MAIN1)
   (1) Measure the resistance between the terminals.
   Resistance

Inspection terminals	Inspection conditions	Standard value
3 - 5	When the battery voltage is not applied to the terminal 1 and terminal 2:	10 k Ωor more
3 - 5	When the battery voltage is applied to the terminal 1 and terminal 2:	Less than 1 Ω

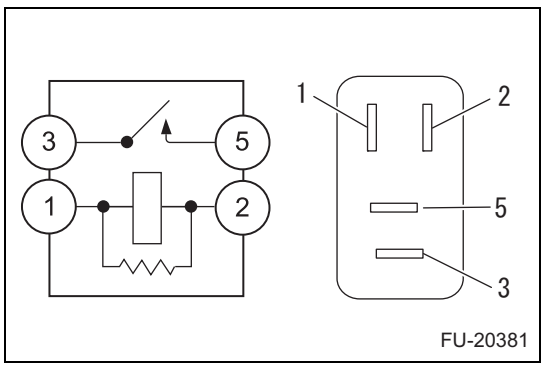

3. Inspection of EFI relay (EFI MAIN2)
   (1) Measure the resistance between the terminals.
   Resistance

Inspection terminals	Inspection conditions	Standard value
3 - 5	When the battery voltage is not applied to the terminal 1 and terminal 2:	10 k Ωor more
3 - 5	When the battery voltage is applied to the terminal 1 and terminal 2:	Less than 1 Ω

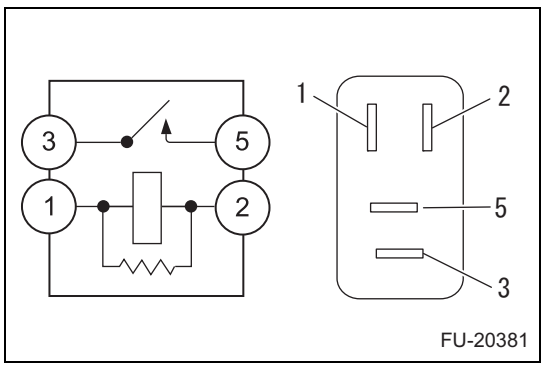

4. Inspection of EFI relay (EFI MAIN3)
   (1) Measure the resistance between the terminals.
   Resistance

Inspection terminals	Inspection conditions	Standard value
3 - 5	When the battery voltage is not applied to the terminal 1 and terminal 2:	10 k Ωor more
3 - 5	When the battery voltage is applied to the terminal 1 and terminal 2:	Less than 1 Ω

ES

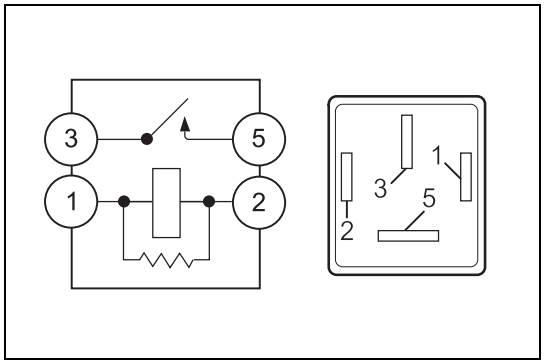

5. Inspection of INJ relay (INJ)
   (1) Measure the resistance between the terminals.
   Resistance

Inspection terminals	Inspection conditions	Standard value
3 - 5	When the battery voltage is not applied to the terminal 1 and terminal 2:	10 k Ωor more
3 - 5	When the battery voltage is applied to the terminal 1 and terminal 2:	Less than 1 Ω

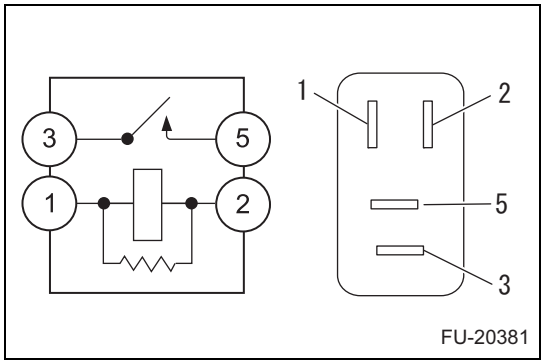

6. Inspection of ETCS relay (ETCS)
   (1) Measure the resistance between the terminals.
   Resistance

Inspection terminals	Inspection conditions	Standard value
3 - 5	When the battery voltage is not applied to the terminal 1 and terminal 2:	10 k Ωor more
3 - 5	When the battery voltage is applied to the terminal 1 and terminal 2:	Less than 1 Ω

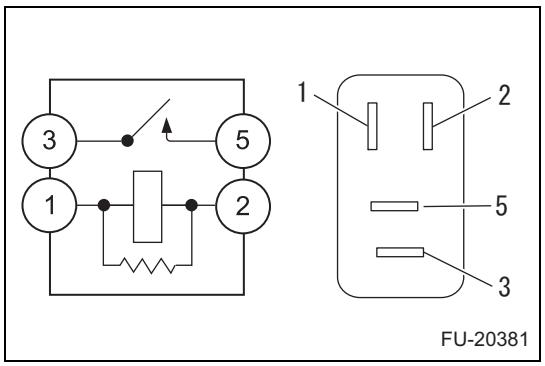

7. Inspection of F/PMP relay (C/OPEN)
   (1) Measure the resistance between the terminals.
   Resistance

Inspection terminals	Inspection conditions	Standard value
3 - 5	When the battery voltage is not applied to the terminal 1 and terminal 2:	10 k Ωor more
3 - 5	When the battery voltage is applied to the terminal 1 and terminal 2:	Less than 1 Ω

ES

Engine mechanical

Engine (FA20)
Function inspection EM-2

V-belt (FA20)
Exploded view EM-5
Removal EM-5
Installation EM-7
On-vehicle inspection EM-8

Cam clearance (FA20)
Adjustment EM-9

Timing chain (FA20)
Exploded view EM-13
Removal EM-13
Installation EM-16

Camshaft (FA20)
Exploded view EM-22
Removal EM-31
Installation EM-34

Cylinder head gasket (FA20)
Exploded view EM-41
Removal EM-41
Installation EM-42

Chain cover oil seal (FA20)
Exploded view EM-48
Removal EM-49
Installation EM-50

Engine rear oil seal (FA20)
Exploded view EM-52
Removal EM-53
Installation EM-54

Partial engine ASSY (FA20)
Exploded view EM-56
Removal EM-75
Installation EM-96

Engine (FA20)

Function inspection

1. Coolant (SUBARU Super Coolant) check (Refer to CO - 2)
2. Engine oil check (Refer to LU - 2)
3. Battery check (Refer to BH - 3)
4. Check of air cleaner filter element SUB-ASSY
   (1) Inspect the air cleaner filter element SUB-ASSY for dirt or clogging.
5. V-ribbed belt tensioner ASSY check
   (1) Remove the V-belt from the belt tensioner pulley.
   (2) Move the V-ribbed belt tensioner ASSY in the both rotational directions to check whether it is caught.
   NOTE:
   Replace the V-ribbed belt tensioner ASSY if faulty.
   (3) Install the V-belt.
6. Ignition timing inspection
   (1) Warm up the engine and stop.
   (2) Connect the SSM4 to the DLC.
   (3) Start the engine.
   (4) Use SSM4 to read the ignition timing. (Refer to ES - 43)
   Standard value: 2 to 22°CA BTDC
   CAUTION:
   Perform this measurement with all accessory switches OFF, A/C OFF, electric fan OFF and shift position N or P.
   (5) Check that the ignition timing advances promptly when the engine speed is increased.
7. Idle speed check
   (1) Warm up the engine and stop.
   (2) Connect the SSM4 to the DLC.
   (3) Start the engine.
   (4) Read the engine speed using the SSM4. (Refer to ES - 43)

Standard value

Transmission	Idle speed
A/T	600 to 800 r/min
M/T	550 to 750 r/min

CAUTION:
Perform this measurement with all accessory switches OFF, A/C OFF, electric fan OFF and shift position N or P.

8. Compression inspection
   (1) Check the diagnosis code (Refer to ES - 28).
   (2) Remove the relay block cover UPR.

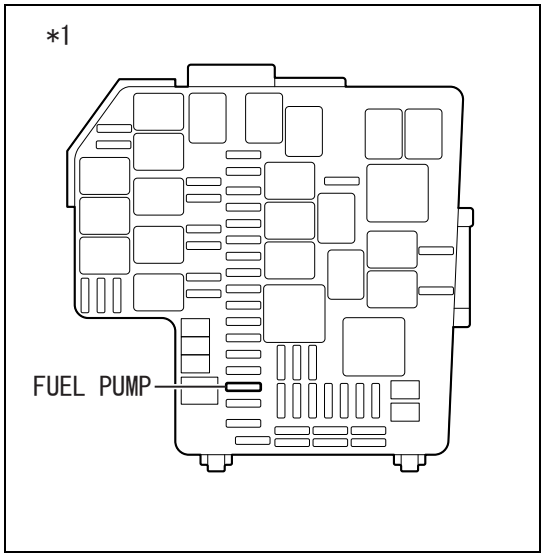

(3) Remove the fuel pump fuse from the engine compartment relay block.

Captions in illustration

*1	Engine compartment relay block

(4) Start the engine.
(5) Turn the ignition to OFF after the engine stalls by itself.
(6) Crank the engine once and check that it does not start.
(7) Remove the four spark plugs. (Refer to ES - 687)

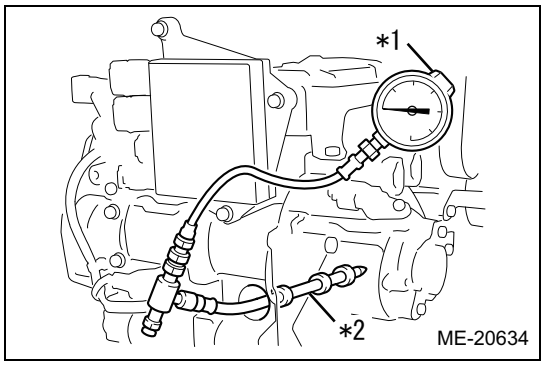

(8) Set the compression gauge and compression gauge attachment.

Captions in illustration

*1	Compression gauge
*2	Compression gauge attachment

(9) Install the injector driver. (Refer to FU - 44)
(10) Fully open the accelerator pedal.
(11) With the brake pedal depressed, crank the engine and measure the compression of each cylinder.
Compression: 1150 to 1750 kPa {11.7 to 17.8 kgf/cm^2} {167 to 254 psi}
Difference between cylinders: 200 kPa {2.0 kgf/cm^2} {29 psi}
CAUTION:
- Perform compression inspection in a short period of time.
- Use a fully charged battery to keep the engine speed at 250 r/min or more.

NOTE:
When the compression pressure is low, pour a small amount of engine oil into cylinders and measure the compression again.
- When the compression increases, it is possible that the piston rings etc. are worn.
- When the compression does not change, it is possible that the valve system is faulty.

(12) Remove the injector driver. (Refer to FU - 43)
(13) Install the four spark plugs. (Refer to ES - 692)
(14) Install the fuel pump fuse.
(15) Install the relay block cover UPR.
(16) Clear the diagnosis code (Refer to ES - 28).
CAUTION:
Be sure to clear the memory of diagnosis code once and then check that no DTCs are output.

9. CO, HC concentration inspection
NOTE:
This check is for determining whether or not the idle CO/HC complies with regulations.

(1) Start the engine.
(2) Maintain the engine speed at 2500 r/min for approximately 180 seconds.
(3) Insert a CO/HC meter testing probe at least 40 cm {15.7 in} into the tailpipe during idling.
(4) Immediately check the CO/HC concentration at idle and/or 2500 r/min.
NOTE:
- When performing the 2 mode (2500 r/min and idle) test, follow the measurement order prescribed by the applicable local regulations.
- If the CO/HC concentration does not comply with regulations, troubleshoot in the order given below.

(a)Check the A/F sensor (See page ES - 708) and heated oxygen sensor (See page ES - 712) operation.
(b)Refer to the table below for the possible cause, and then inspect and correct the applicable causes if necessary.

CO	HC	Trouble	Probable cause
Normal	High	Rough idling	1. Weak ignition – Defective timing – Faulty plug gap 2. Intake/exhaust leakage 3. Cylinder compression leakage
Low	High	Rough idling (HC unstable)	1. Vacuum leakage – PCV hose – Intake manifold – Throttle body 2. Misfire due to lean fuel mixture
High	High	Rough idling (black smoke)	1. Clogged air cleaner element 2. Clogged PCV valve 3. Faulty EFI system – Faulty pressure regulator – Faulty engine coolant sensor – Faulty air flow meter – Faulty ECM – Faulty injector – Faulty throttle position sensor

V-belt (FA20)

Exploded view

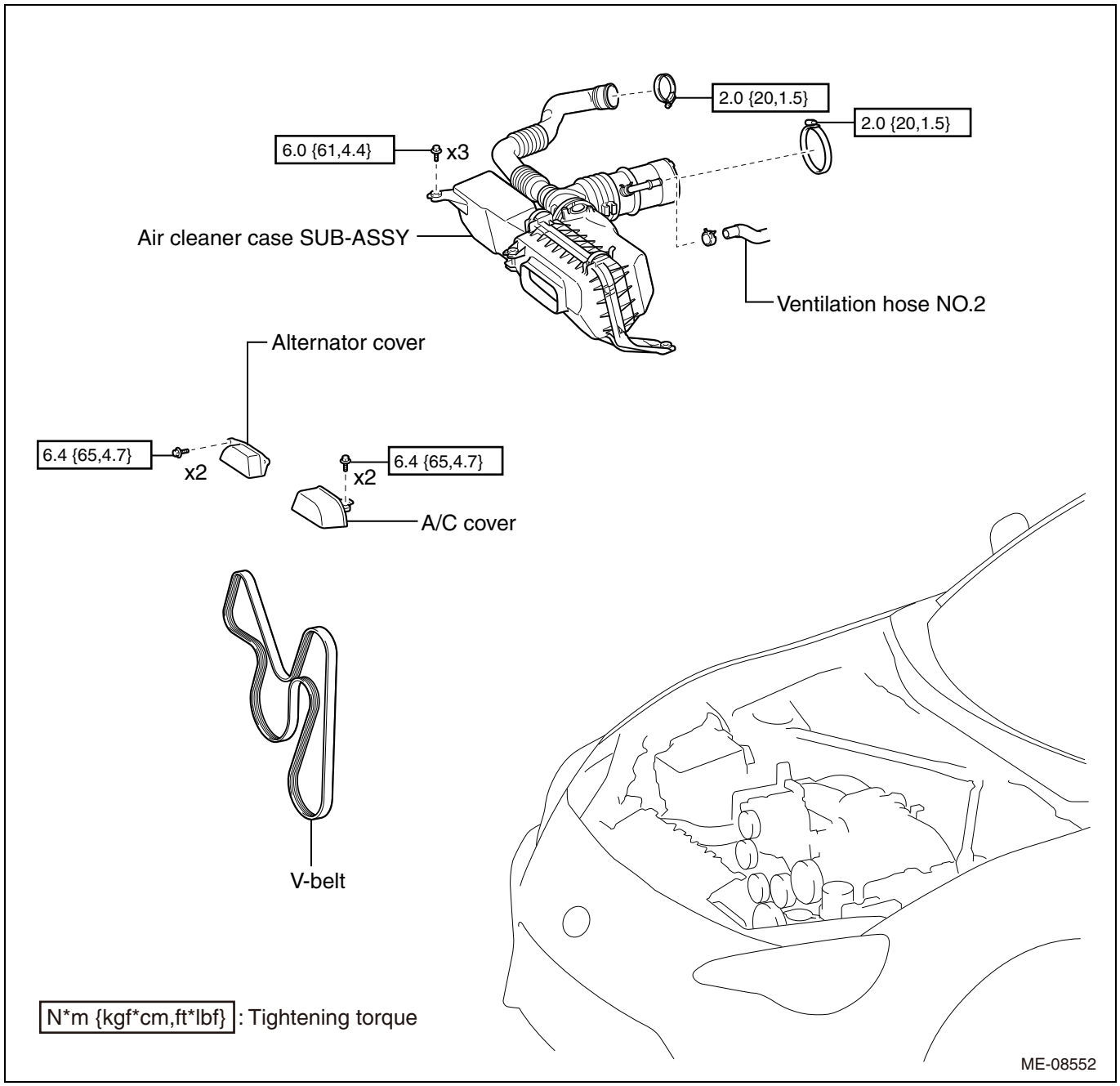

Removal

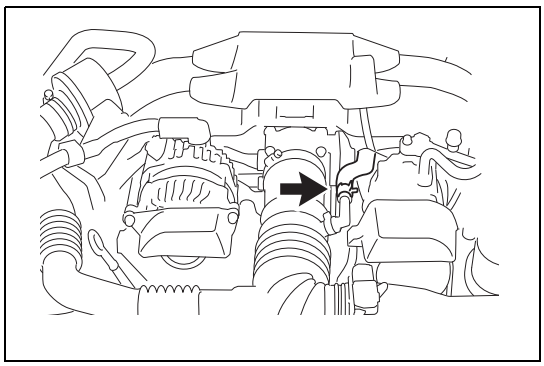

1. Air cleaner case SUB-ASSY removal
   (1) Move the hose clip and disconnect the ventilation hose NO. 2.

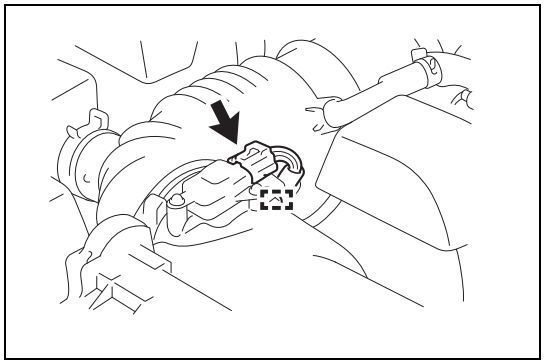

(2) Disconnect the connector from the intake air flow meter SUB-ASSY.
(3) Release the clamp and disconnect the wiring harness from the air cleaner cap.

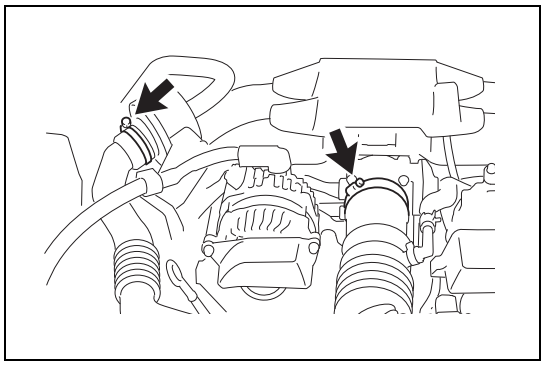

(4) Loosen the two hose clamps and remove the air cleaner duct and air intake boot.

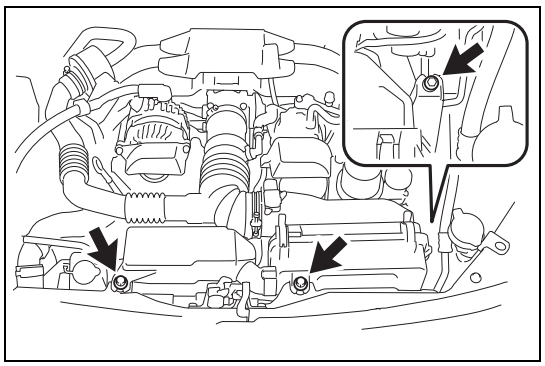

(5) Remove the three bolts and remove the air cleaner case SUB-ASSY.

2. Generator cover removal
(1) Remove the two bolts and remove the generator cover.

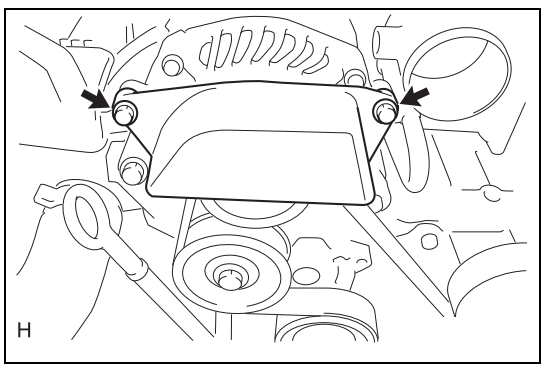

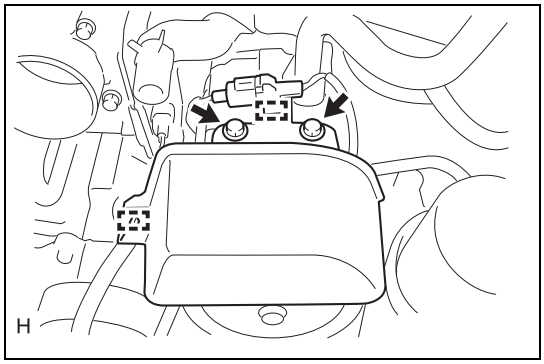

3. Removal of A/C cover
   (1) Release the two clamps and disconnect the wiring harness.
   (2) Remove the two bolts and remove the A/C cover.

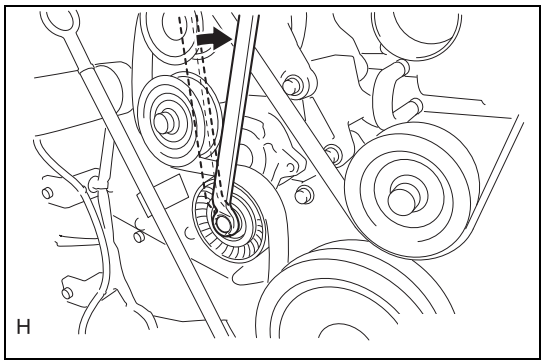

4. V-belt removal
   (1) Attach the tool to the pulley set bolt of belt tensioner and release the tension by rotating the belt tensioner clockwise to remove the V-belt.

EM

Installation

1. V-belt installation

   NOTE:

   When reusing the V-belt, check the rib and back side of its entire perimeter for wear or crack, and replace it if the wear or crack reaches its core (at one or more locations) or the rib rubber is chipped (at one or more locations).

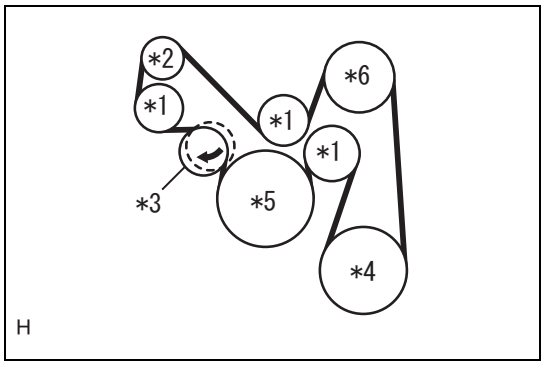

   (1) Route the V-belt around the pulleys as shown in the figure.

Captions in illustration

*1	Idler pulley
*2	Generator
*3	V-ribbed belt tensioner ASSY
*4	Water pump
*5	Crankshaft
*6	A/C compressor

   CAUTION:

   The back side of the V-belt should face to the belt tensioner and the idler pulleys.

   (2) Attach the tool to the pulley set bolt of belt tensioner and turn the belt tensioner clockwise.

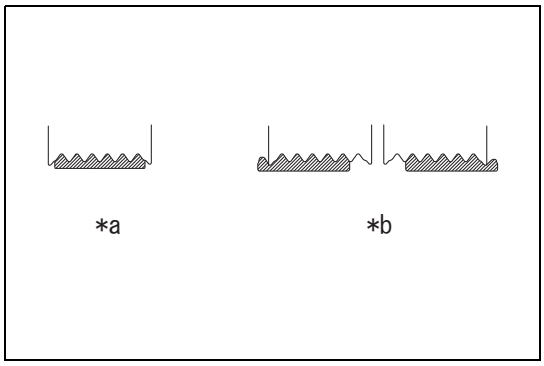

   (3) Make sure that the V-belt is properly set on each pulley.

Captions in illustration

*a	OK
*b	NG

2. Installation of A/C cover
   (1) Install the A/C cover with the two bolts.
   Standard value:T=6.4N·m {65kgf·cm} {4.7ft·lbf}

(2) Engage the two clamps and connect the wiring harness.

3. Generator cover installation
   (1) Install the generator cover with the two bolts.
   Standard value:T=6.4N·m {65kgf·cm} {4.7ft·lbf}

4. Air cleaner case SUB-ASSY installation
   (1) Install the air cleaner case SUB-ASSY with the three bolts.
   Standard value:T=6.0N·m {61kgf·cm} {4.4ft·lbf}
   (2) Install the air cleaner duct and air cleaner intake boot with the two hose clamps.
   Standard value:T=2.0N·m {20kgf·cm} {1.5ft·lbf}
   (3) Engage the clamp and install the wiring harness to the air cleaner cap.
   (4) Connect the connector to the intake air flow meter SUB-ASSY.
   (5) Connect the ventilation hose NO. 2 with the hose clip.

EM

5. V-belt check
   (1) Start the engine and check that the V-belt is rotating smoothly without abnormal noise.

On-vehicle inspection

1. V-belt check
   NOTE:
   Check the belt when reusing it.

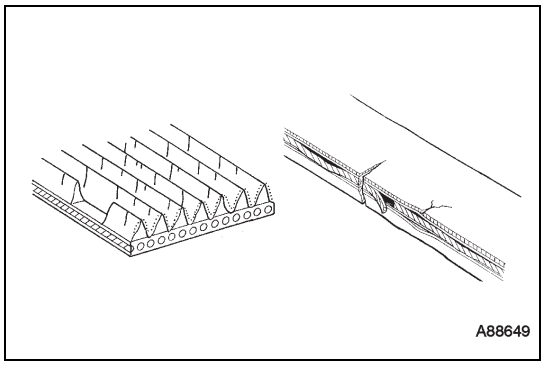

(1) Check the V-belt for wear or cracks.
   NOTE:
   - Replace the belt if it is cracked.
   - Replace the belt if it is worn until its core is exposed.
   - Replace the belt if its rib rubber is chipped.

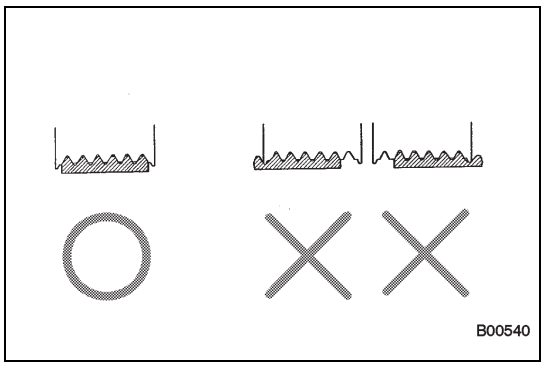

(2) Check that the V-belt fits securely in the rib grooves.
   NOTE:
   - Visually and manually check that the V-belt is properly located on the rib grooves at the lower side of the pulleys.
   - If the V-belt is not located properly, replace with a new part.

2. V-ribbed belt tensioner ASSY check
   (1) Stop the engine from idling speed and check that the V-belt does not protrude from the width of belt tensioner pulley.
   (2) Move the belt tensioner in the both rotational directions to check whether it is caught.
   NOTE:
   Replace the V-ribbed belt tensioner ASSY if faulty.

Cam clearance (FA20)

Adjustment

1. Removal of ignition coil ASSY (Refer to ES - 691)
2. Removal of intake manifold protector (bank 1 side) (Refer to FU - 22)
3. Injector driver bracket removal (Refer to EM - 91)
4. Removal of rocker cover RH (Refer to EM - 91)
5. Rocker cover LH removal (Refer to EM - 93)
6. Inspection of cam clearance
   (1) Turn the crankshaft clockwise to set the No. 1 cylinder to the top dead center of compression stroke and align the timing mark (cutout) to 0° position of the chain cover.

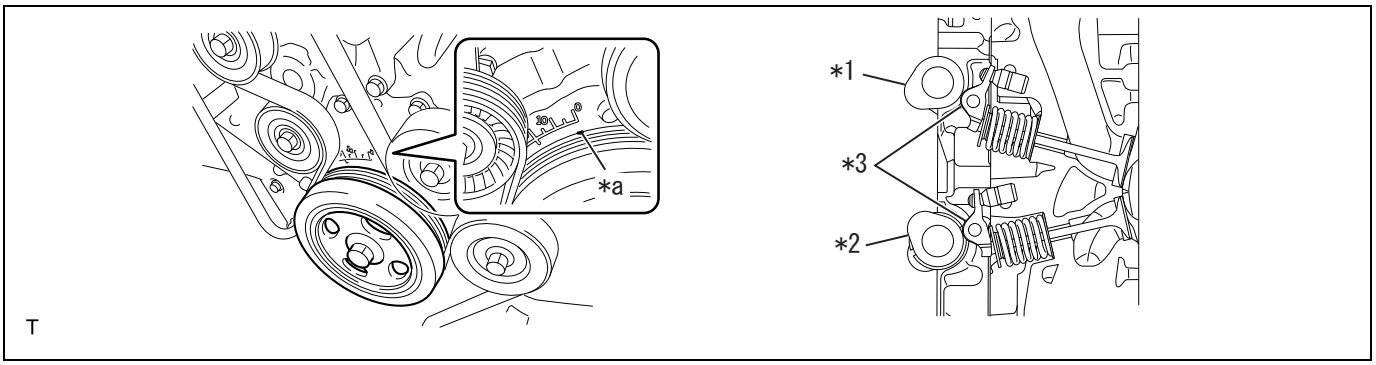

Captions in illustration

*1	Intake camshaft	*2	Exhaust camshaft
*3	Roller rocker arm	-	-
*a	Timing mark	-	-

   (2) At this time, make sure that the intake camshaft and exhaust camshaft do not push down the intake side roller rocker arm (intake valve) and exhaust side roller rocker arm (exhaust valve) of NO. 1 cylinder.
   NOTE:
   If the roller rocker arm (valve) is depressed, turning the crankshaft by 360° makes the piston of NO. 1 cylinder at TDC of compression stroke.
   (3) Measure the cam clearance at the positions shown in the figure (#1 intake and exhaust, #3 exhaust).

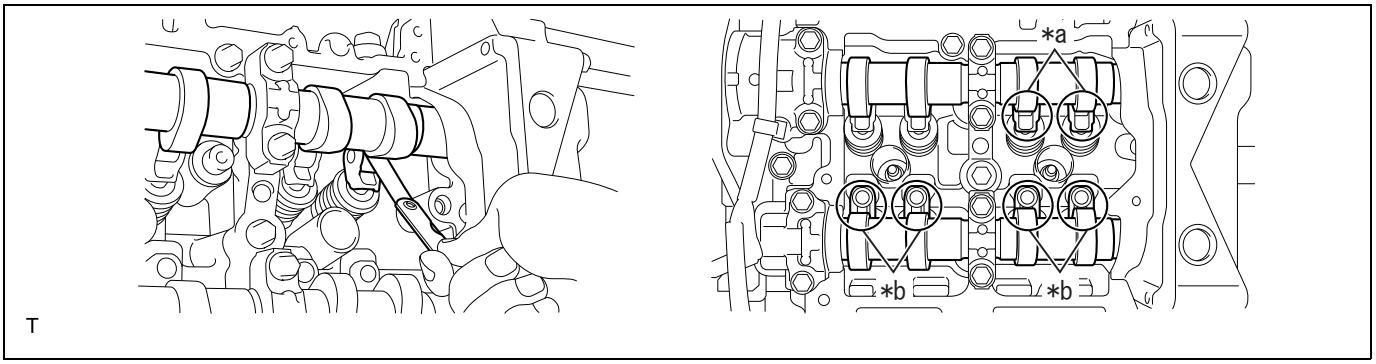

Captions in illustration

*a	Intake side	*b	Exhaust side

   (4) Measure the roller surface of cam base circle and roller rocker arm using a thickness gauge.
   Standard value (when engine is cold): 0.10 to 0.15 mm {0.0039 to 0.0059 in} (Intake side)
   0.20 to 0.24 mm {0.0079 to 0.0094 in} (Exhaust side)

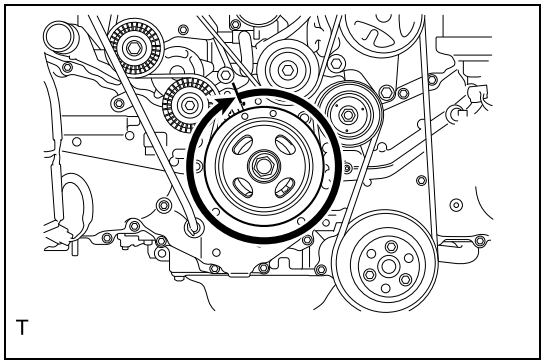

(5) Turn the crankshaft pulley by 360° clockwise.

EM

(6) Measure the cam clearance at the position shown in the figure (#3 intake).

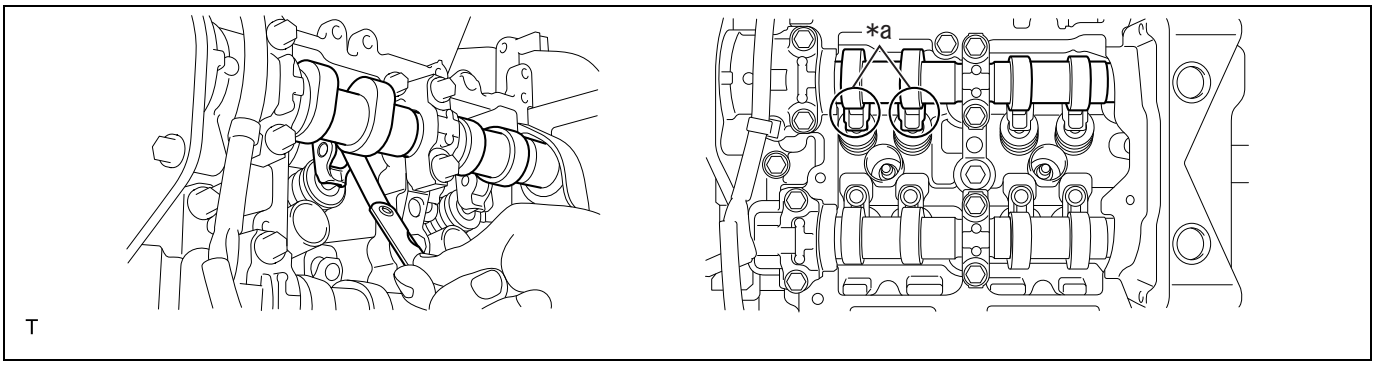

Captions in illustration

*a	Intake side	-	-

(7) Measure the roller surface of cam base circle and roller rocker arm using a thickness gauge.
Standard value (when engine is cold): 0.10 to 0.15 mm {0.0039 to 0.0059 in} (Intake side)

(8) Turn the crankshaft clockwise to set the No. 2 cylinder to the top dead center of compression stroke and align the timing mark (cutout) to 0° position of the chain cover.

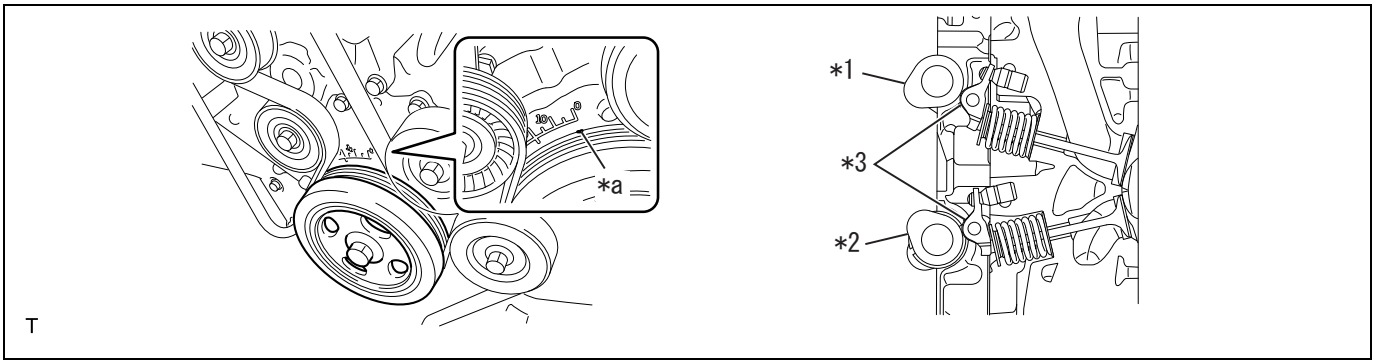

Captions in illustration

*1	Intake camshaft	*2	Exhaust camshaft
*3	Roller rocker arm	-	-
*a	Timing mark	-	-

(9) At this time, make sure that the intake camshaft and exhaust camshaft do not push down the intake side roller rocker arm (intake valve) and exhaust side roller rocker arm (exhaust valve) of NO. 2 cylinder.
NOTE:
If the roller rocker arm (valve) is depressed, turning the crankshaft by 360° makes the piston of NO. 2 cylinder at TDC of compression stroke.

(10) Measure the cam clearance at the positions shown in the figure (#2 intake and exhaust, #4 exhaust).

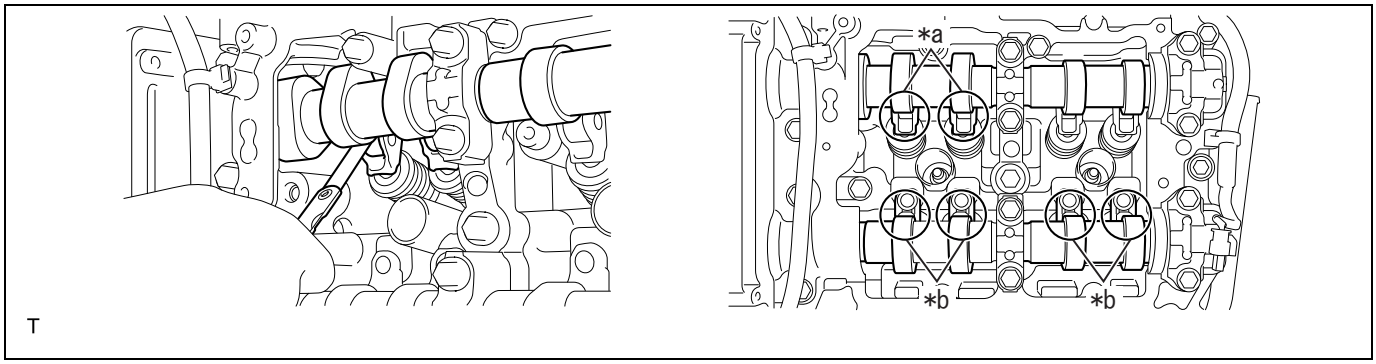

Captions in illustration

*a	Intake side	*b	Exhaust side

(11) Measure the roller surface of cam base circle and roller rocker arm using a thickness gauge.
Standard value (when engine is cold): 0.10 to 0.15 mm {0.0039 to 0.0059 in} (Intake side)
0.20 to 0.24 mm {0.0079 to 0.0094 in} (Exhaust side)

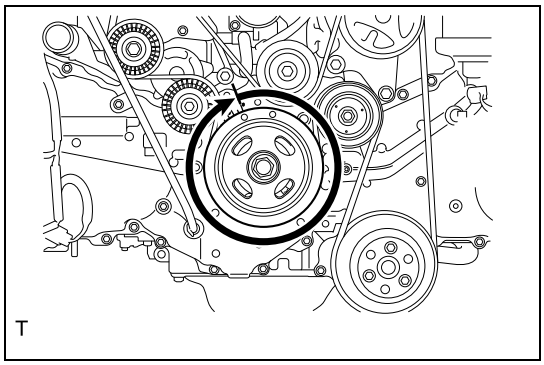

(12) Turn the crankshaft pulley by 360° clockwise.

(13) Measure the cam clearance at the position shown in the figure (#4 intake).

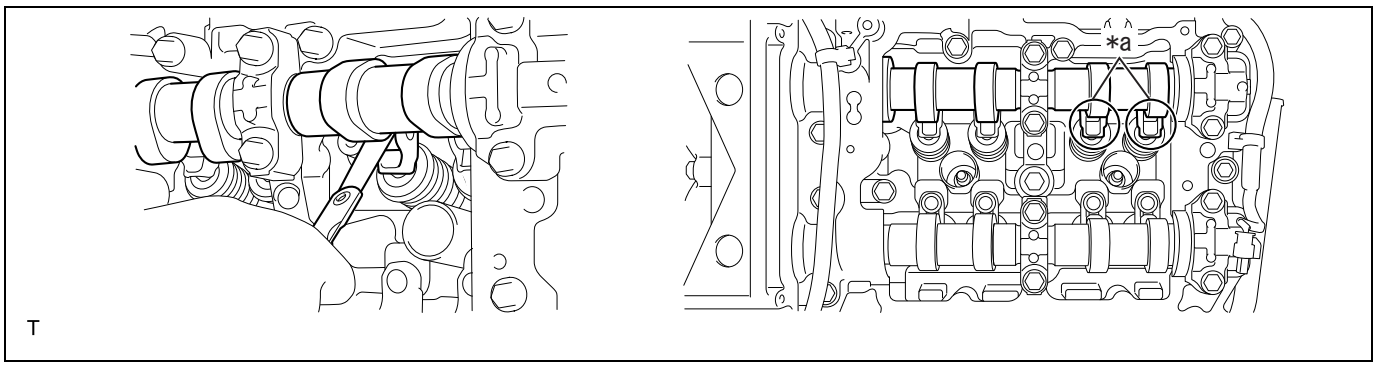

Captions in illustration

*a	Intake side	-	-

(14) Measure the roller surface of cam base circle and roller rocker arm using a thickness gauge.
Standard value (when engine is cold): 0.10 to 0.15 mm {0.0039 to 0.0059 in} (Intake side)

7. Cam clearance adjustment
   (1) Remove the cam carrier. (Refer to EM - 75)
   (2) Remove the valve shim.

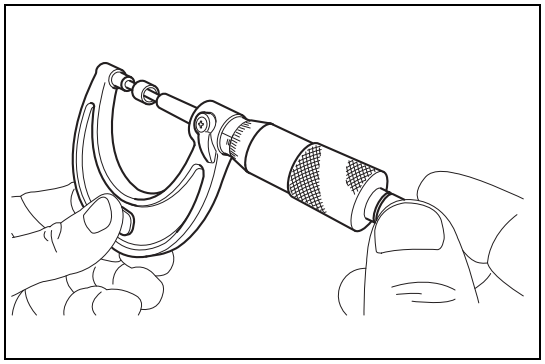

(3) Measure the thickness of removed valve shim using a micrometer.

EM

(4) Calculate the thickness of valve shim so that the cam clearance is within the standard value.
Standard value: Intake side: (Selected shim thickness) = (Removed shim thickness) + [(Measured clearance) - 0.13 mm {0.0051 in}] ×1.69
Exhaust side: (Selected shim thickness) = (Removed shim thickness) + [(Measured clearance) - 0.22 mm {0.0087 in}] ×1.87

(5) Apply new engine oil to the inner circumference of selected valve shim and install it to the valve.
CAUTION:
After inserting the valve shim, make sure that it turns smoothly.

(6) Install the cam carrier. (Refer to EM - 96)

8. Rocker cover LH installation (Refer to EM - 101)
9. Installation of rocker cover RH (Refer to EM - 105)
10. Injector driver bracket installation (Refer to EM - 106)
11. Installation of intake manifold protector (bank 1 side) (Refer to FU - 28)
12. Installation of ignition coil ASSY (Refer to ES - 692)

Timing chain (FA20)

Exploded view

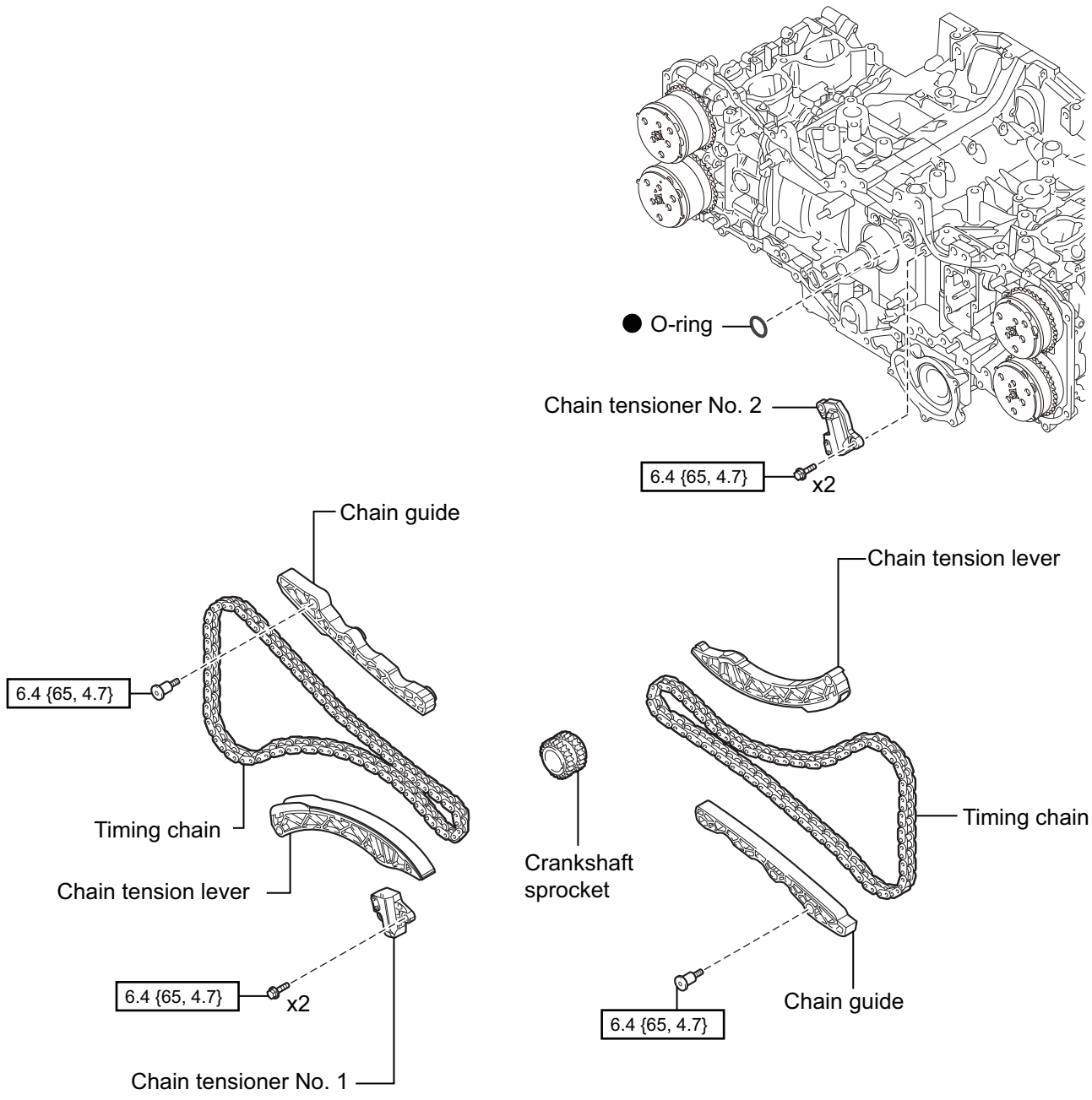

Removal

1. Chain cover removal (Refer to LU - 16)

2. Timing chain removal (bank 1 side)
   (1) Attach the SST to the crankshaft.
   SST 18252AA000

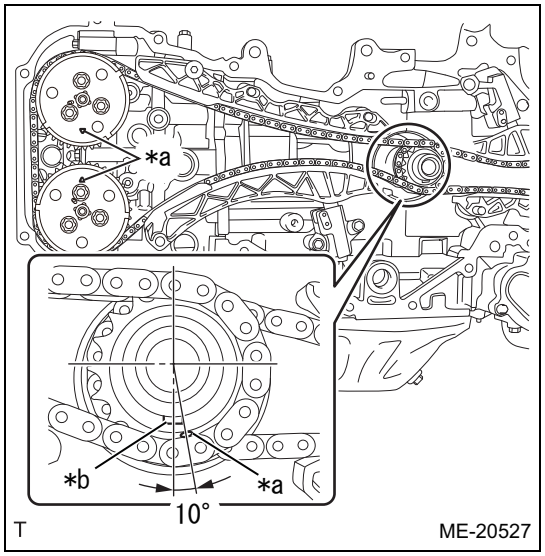

(2) Turn the crankshaft using the SST to align the alignment marks of crankshaft sprocket, intake cam sprocket RH and exhaust cam sprocket RH.

Captions in illustration

*a	Alignment marks
*b	Key

NOTE:
At this time, the crankshaft sprocket key faces downward.

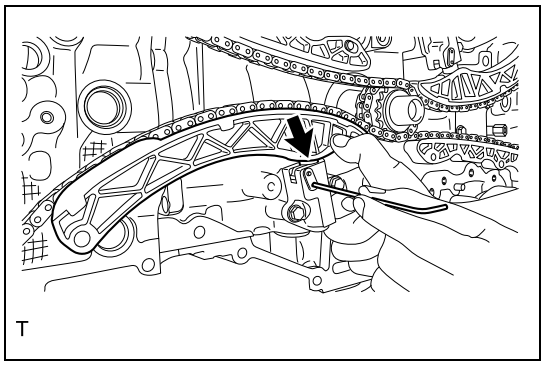

(3) Push down the chain tension lever as shown in the figure and secure the plunger by inserting a 2.5 mm dia. hex wrench into the holes of chain tensioner No. 1 and stopper plate.

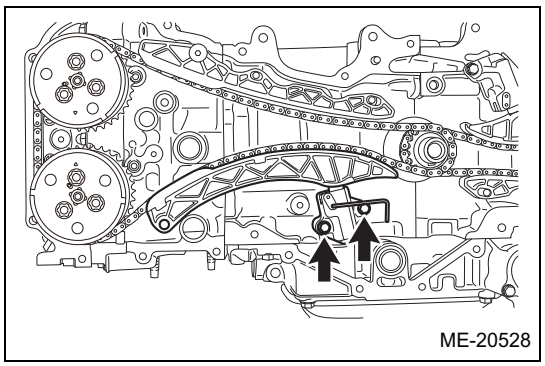

(4) Remove the two bolts and chain tensioner No.1.

(5) Remove the chain tension lever.

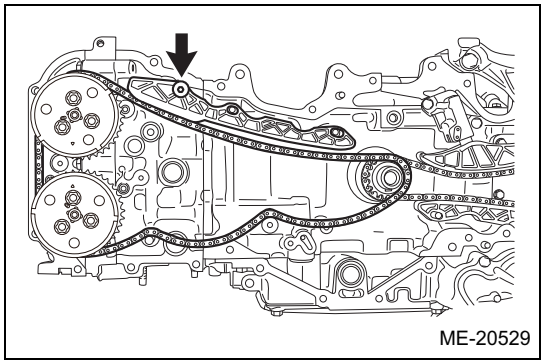
ME-20529

(6) Remove the bolt, and remove the chain guide.

(7) Remove the timing chain.

CAUTION:

When the timing chain is removed, the valve heads contact each other and the valve stems may bend. Do not turn the intake camshaft RH and exhaust camshaft RH to the outside of the range of zero-lift (in range where they can be turned lightly by hand).

NOTE:

The removed parts must be organized by installation location.

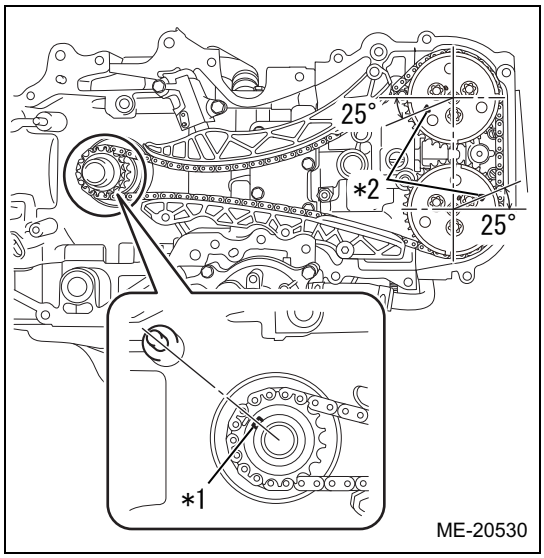

ME-20530

3. Timing chain removal (bank 2 side)

(1) Attach the SST to the crankshaft.

SST 18252AA000

(2) Turn the crankshaft using the SST to align the alignment marks of crankshaft sprocket, intake cam sprocket LH and exhaust cam sprocket LH.

Captions in illustration

*1	Key
*2	Alignment marks

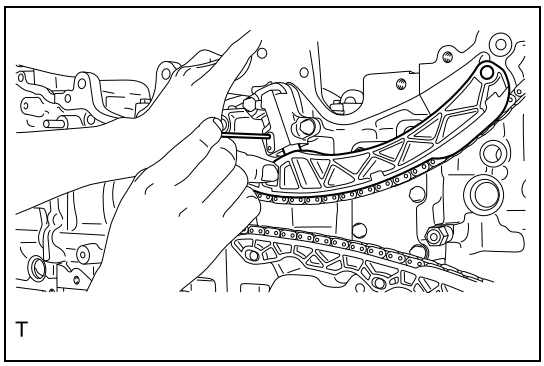
T

(3) Push up the chain tension lever as shown in the figure and secure the plunger by inserting a wire (with a diameter of approx. 1.3mm {0.05 in}) into the holes of chain tensioner No.2 and stopper plate.

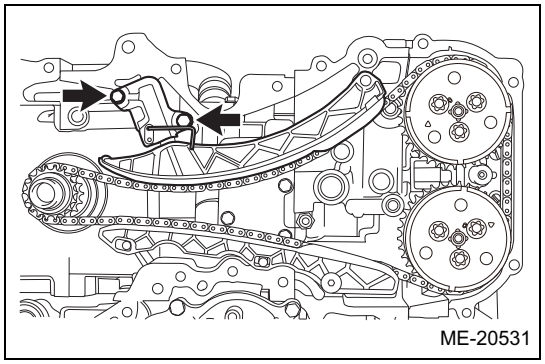
ME-20531

(4) Remove the two bolts and chain tensioner No.2.
(5) Remove the chain tension lever.

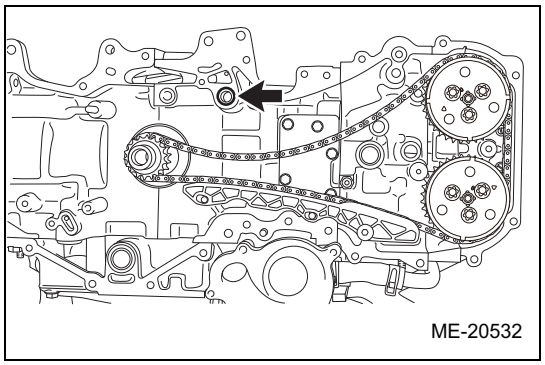
ME-20532

(6) Remove the O-ring from the cylinder block (bank 2 side).

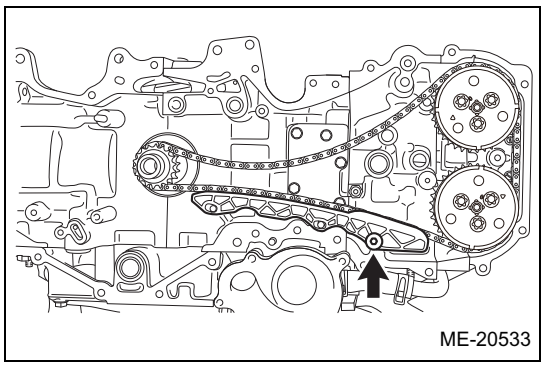
ME-20533

(7) Remove the bolt, and remove the chain guide.
(8) Remove the timing chain.
CAUTION:
- When the timing chain is removed, the valve heads contact each other and the valve stems may bend. Do not turn the exhaust camshaft LH to the outside of the range of zero-lift (in range where they can be turned lightly by hand).
- At this time, the No. 1 piston and No. 4 piston are located near the TDC of compression stroke. If the intake camshaft LH is turned, the valve and the piston may contact and valve stem may bend. Do not turn the intake camshaft LH.

NOTE:
The removed parts must be organized by installation location.
(9) Remove the SST from the crankshaft.

Installation

1. Installation of timing chain (bank 2 side)
CAUTION:
Be careful that the foreign matter is not into or onto the assembled component during installation.
NOTE:
Apply new engine oil to all component parts of the timing chain.
(1) Attach the SST to the crankshaft.
SST 18252AA000

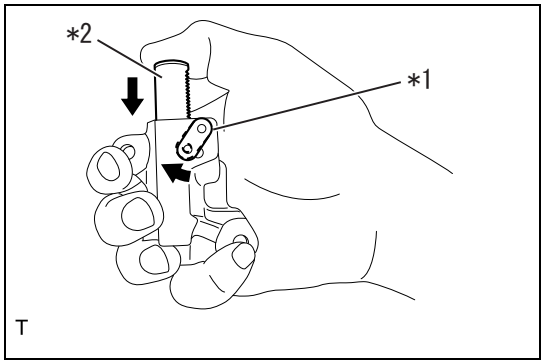

(2) Move the link plate in the direction of the arrow and press in the plunger.

Captions in illustration

*1	Link plate
*2	Plunger

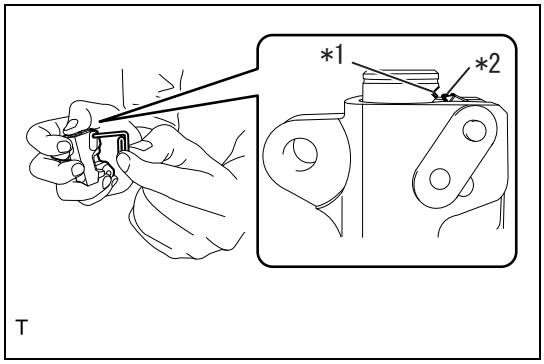

(3) Insert a wire (with a diameter of approx. 1.3mm {0.05 in}) into the stopper pin hole to secure the plunger.
NOTE:
If the stopper pin hole on the link plate and the stopper pin hole on the chain tensioner are not aligned, check that the first notch of plunger rack is engaged with the stopper tooth. If not engaged, retract the plunger a little so that the first notch of plunger rack is engaged with the stopper tooth.

Captions in illustration

*1	First notch of rack
*2	Stopper tooth

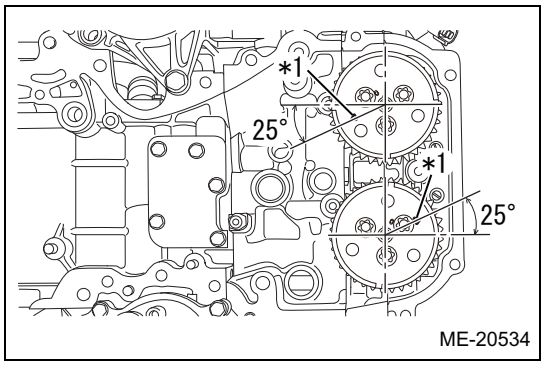

(4) Align the alignment marks of intake cam sprocket LH and exhaust cam sprocket LH to the positions as shown in the figure.
CAUTION:
- Pay attention when performing the work, since the SST comes off easily.
- To prevent valve damage, turn the intake cam sprocket LH and exhaust cam sprocket LH only within the range of zero-lift (in range where they can be turned lightly by hand).

Captions in illustration

*1	Alignment marks

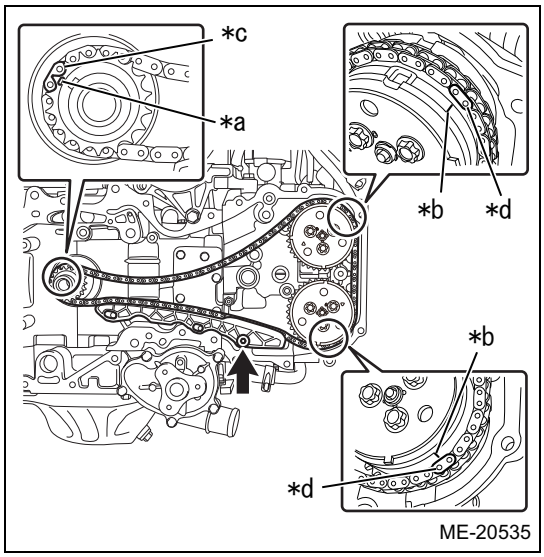

(5) Align the mark plate (blue) of timing chain to the alignment mark position of crankshaft sprocket.

Captions in illustration

*a	Alignment marks
*b	Timing mark
*c	Mark plate (blue)
*d	Mark plate (pink)

(6) Align the mark plate (pink) of timing chain to the timing mark position of intake cam sprocket LH.
(7) Align the mark plate (pink) of timing chain to the timing mark position of exhaust cam sprocket LH.
(8) Apply new engine oil to the sliding surface of chain guide bolt.
(9) Install the chain guide with the bolt.
Standard value:T=6.4N·m {65kgf·cm} {4.7ft·lbf}

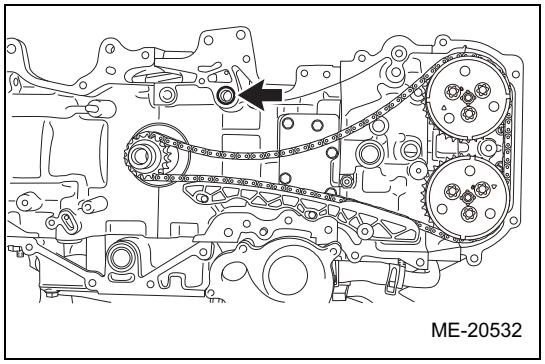

(10) Attach a new O-ring on the cylinder block (bank 2 side).

EM

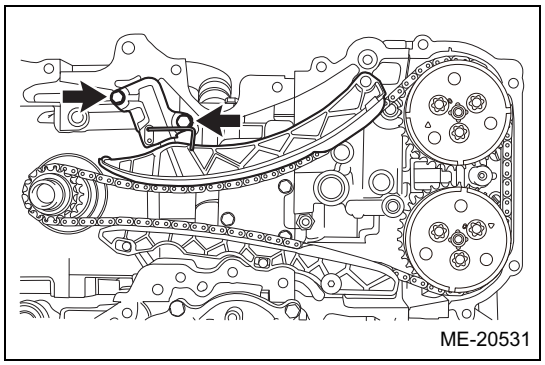

(11) Install the chain tension lever.

(12) Install chain tensioner No.2 with the two bolts.
Standard value: T=6.4N·m {65kgf·cm} {4.7ft·lbf}

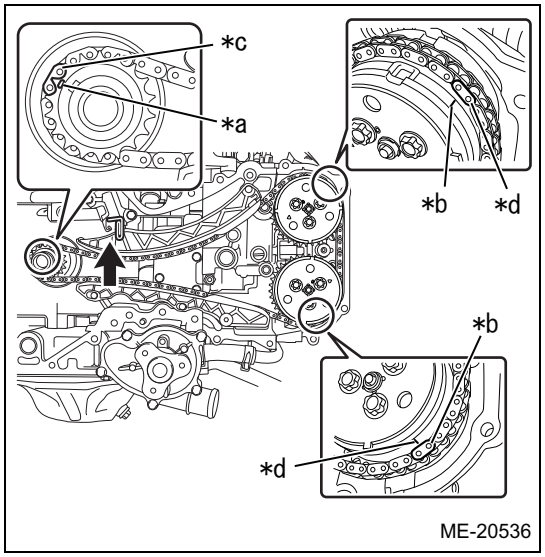

(13) Make sure that the timing chain is properly installed.

Captions in illustration

*a	Alignment marks
*b	Timing mark
*c	Mark plate (blue)
*d	Mark plate (pink)

(a) The mark plate (blue) of timing chain is aligned to the alignment mark position of crankshaft sprocket.
(b) The mark plate (pink) of timing chain is aligned to the timing mark position of intake cam sprocket LH.
(c) The mark (pink) of timing chain is aligned to the timing mark position of exhaust cam sprocket LH.

(14) Pull out the wire from chain tensioner No.2.
NOTE:
Push up the chain tension lever and press in the plunger of chain tensioner No.2 to pull out the wire.
(15) Attach the SST to the crankshaft.
SST 18252AA000
(16) Turn the crankshaft clockwise and make sure that there are no abnormal conditions.
CAUTION:
Always make sure to perform this confirmation.
(17) Remove the SST from the crankshaft.

2. Timing chain installation (bank 1 side)
CAUTION:
Be careful that foreign matter is not into or onto the assembled component during installation.
NOTE:
Apply new engine oil to all component parts of the timing chain.

(1) Attach the SST to the crankshaft.
SST 18252AA000

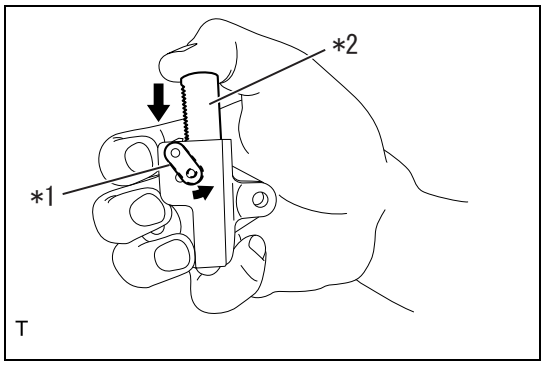

(2) Move the link plate in the direction of the arrow and press in the plunger.

Captions in illustration

*1	Link plate
*2	Plunger

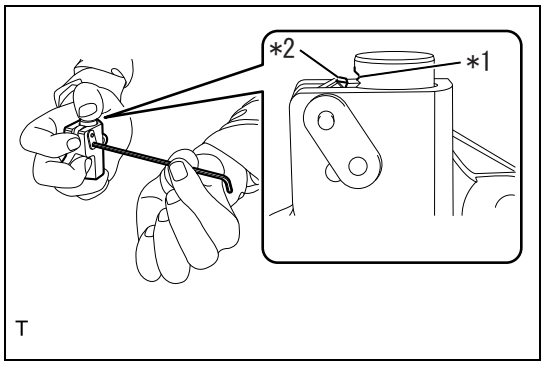

(3) Insert a 2.5 mm dia. hex wrench into the stopper pin hole to secure the plunger.

Captions in illustration

*1	First notch of rack
*2	Stopper tooth

NOTE:
If the stopper pin hole on the link plate and the stopper pin hole on the chain tensioner are not aligned, check that the first notch of plunger rack is engaged with the stopper tooth. If not engaged, retract the plunger a little so that the first notch of plunger rack is engaged with the stopper tooth.

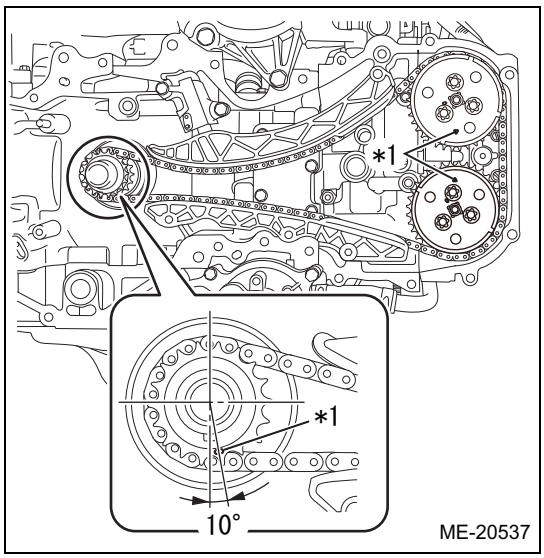

(4) Turn the crankshaft using the SST to align the alignment marks of crankshaft sprocket, intake cam sprocket LH and exhaust cam sprocket LH as shown in the figure.

Captions in illustration

*1	Alignment marks

NOTE:
If the marks are aligned to the positions as shown in the figure, the crankshaft key faces downward.

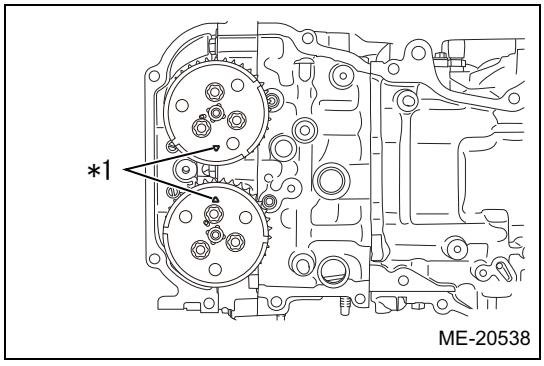

(5) Align the alignment marks of intake cam sprocket RH and exhaust cam sprocket RH to the positions as shown in the figure.
CAUTION:
To prevent valve damage, turn the intake cam sprocket RH and exhaust cam sprocket RH only within the range of zero-lift (in range where they can be turned lightly by hand).

Captions in illustration

*1	Alignment marks

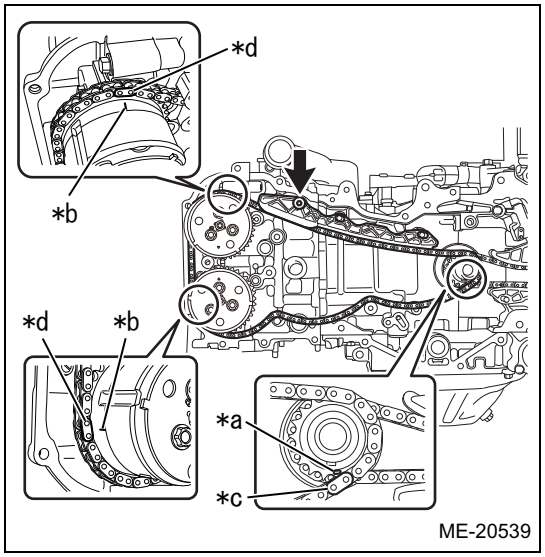

(6) Align the mark plate (blue) of timing chain to the alignment mark position of crankshaft sprocket.

Captions in illustration

*a	Alignment marks
*b	Timing mark
*c	Mark plate (blue)
*d	Mark plate (pink)

(7) Align the mark plate (pink) of timing chain to the timing mark position of intake cam sprocket RH.
(8) Align the mark plate (pink) of timing chain to the timing mark position of exhaust cam sprocket RH.
(9) Apply new engine oil to the sliding surface of chain guide bolt.
(10) Install the chain guide with the bolt.
Standard value:T=6.4N·m {65kgf·cm} {4.7ft·lbf}

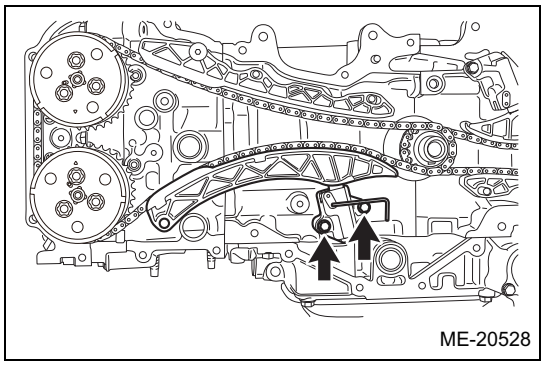

(11) Install the chain tension lever.

(12) Install chain tensioner No.1 with the two bolts.
Standard value:T=6.4N·m {65kgf·cm} {4.7ft·lbf}

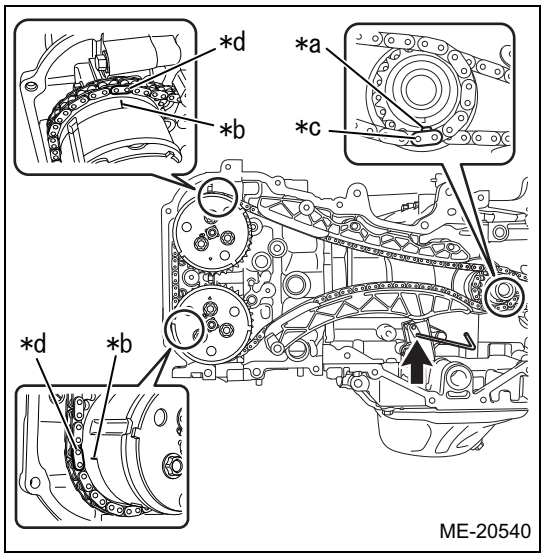

(13) Make sure that the timing chain is properly installed.

Captions in illustration

*a	Alignment marks
*b	Timing mark
*c	Mark plate (blue)
*d	Mark plate (pink)

(a) The mark plate (blue) of timing chain is aligned to the alignment mark position of crankshaft sprocket.
(b) The mark plate (pink) of timing chain is aligned to the timing mark position of intake cam sprocket RH.
(c) The mark plate (pink) of timing chain is aligned to the timing mark position of exhaust cam sprocket RH.

(14) Pull out the hexagon wrench from chain tensioner No.1.
(15) Attach the SST to the crankshaft.

SST 18252AA000

(16) Turn the crankshaft clockwise and make sure that there are no abnormal conditions.

CAUTION:

Always make sure to perform this confirmation.

(17) Remove the SST from the crankshaft.

3. Chain cover installation (Refer to LU - 25)

Camshaft (FA20)

Exploded view

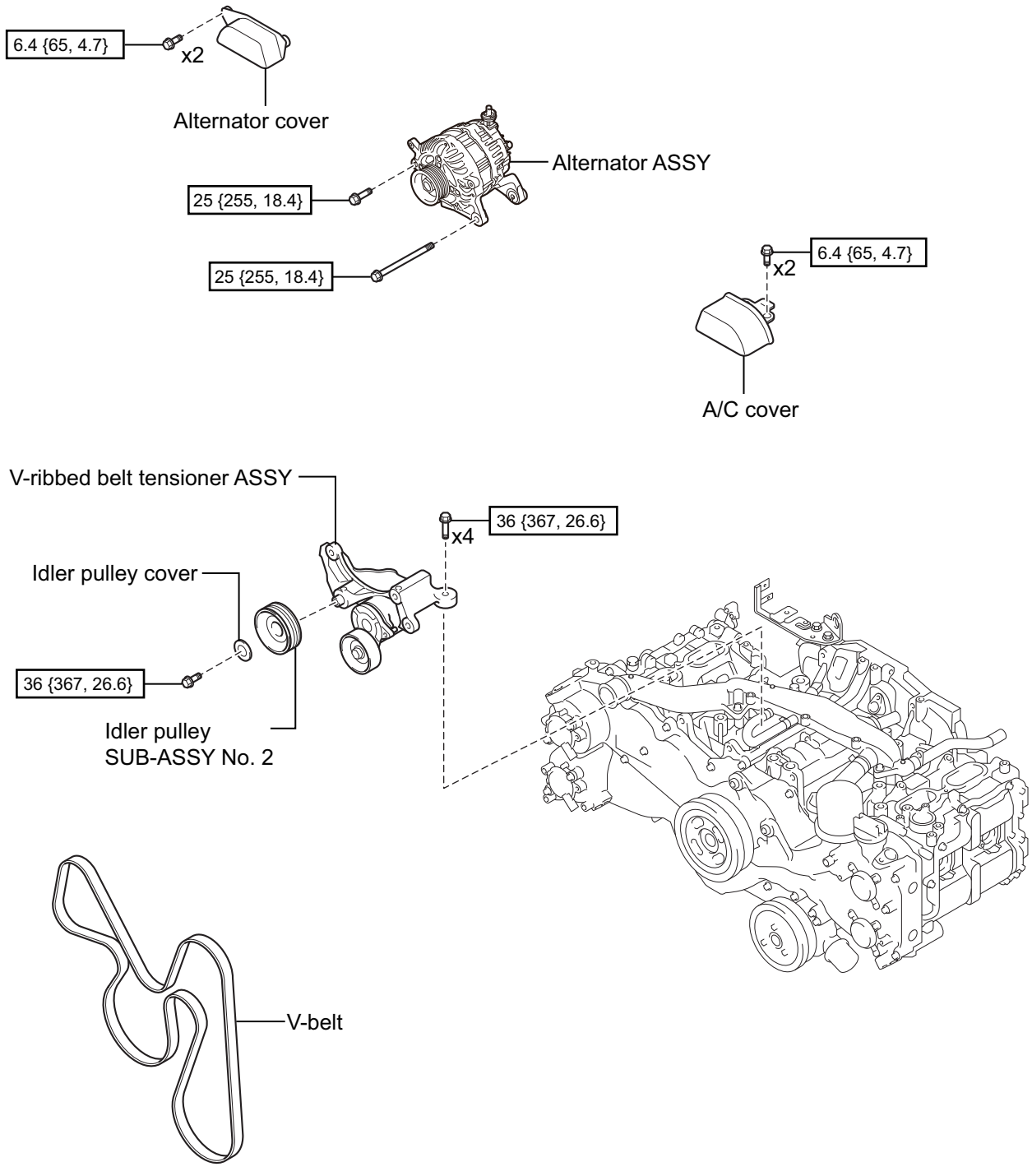

N*m {kgf*cm, ft*lbf}: Tightening torque

ME-20541

Transmission A/T:

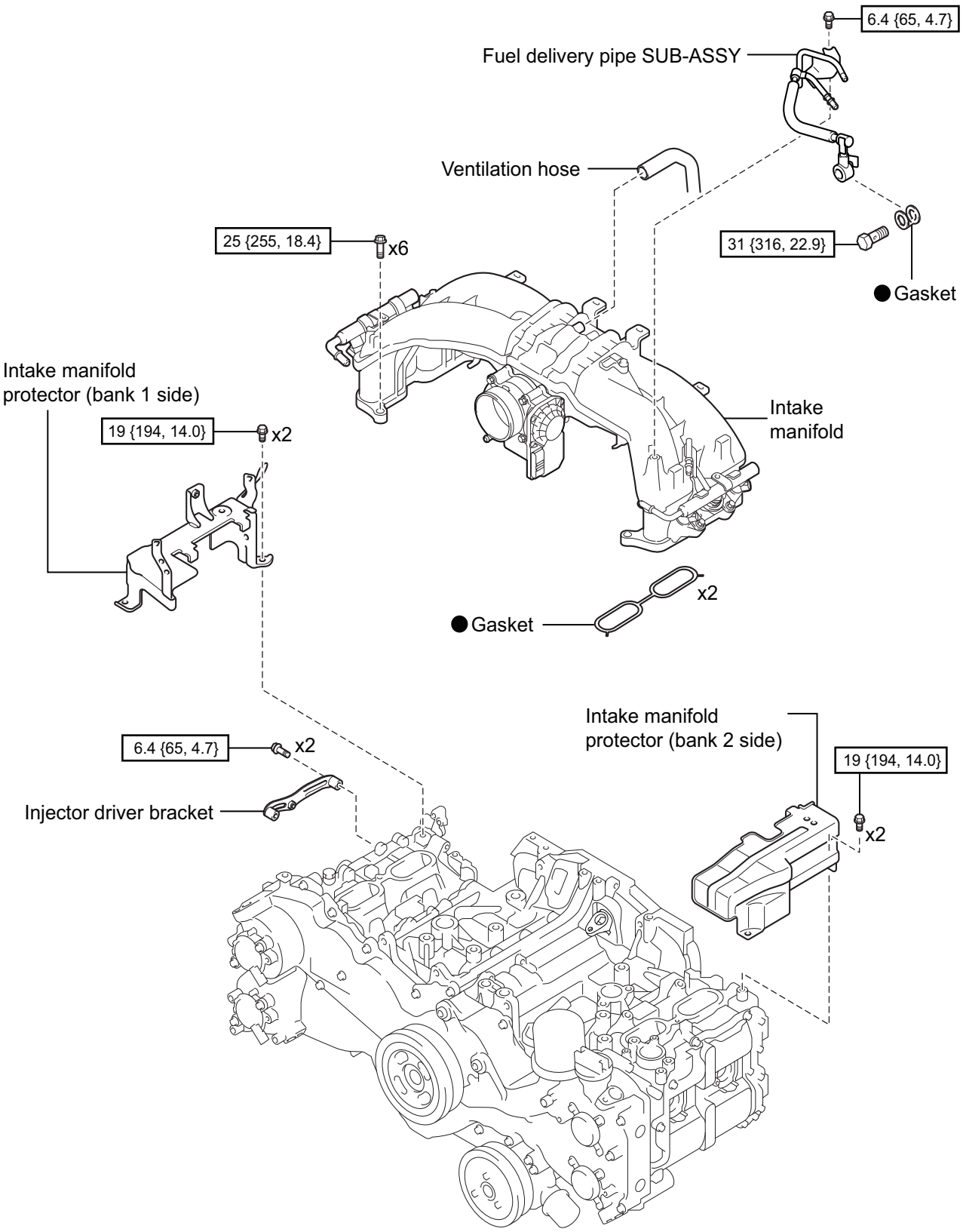

N*m {kgf*cm, ft*lbf} : Tightening torque ● Non-reusable part

ME-20575

EM

Transmission M/T:

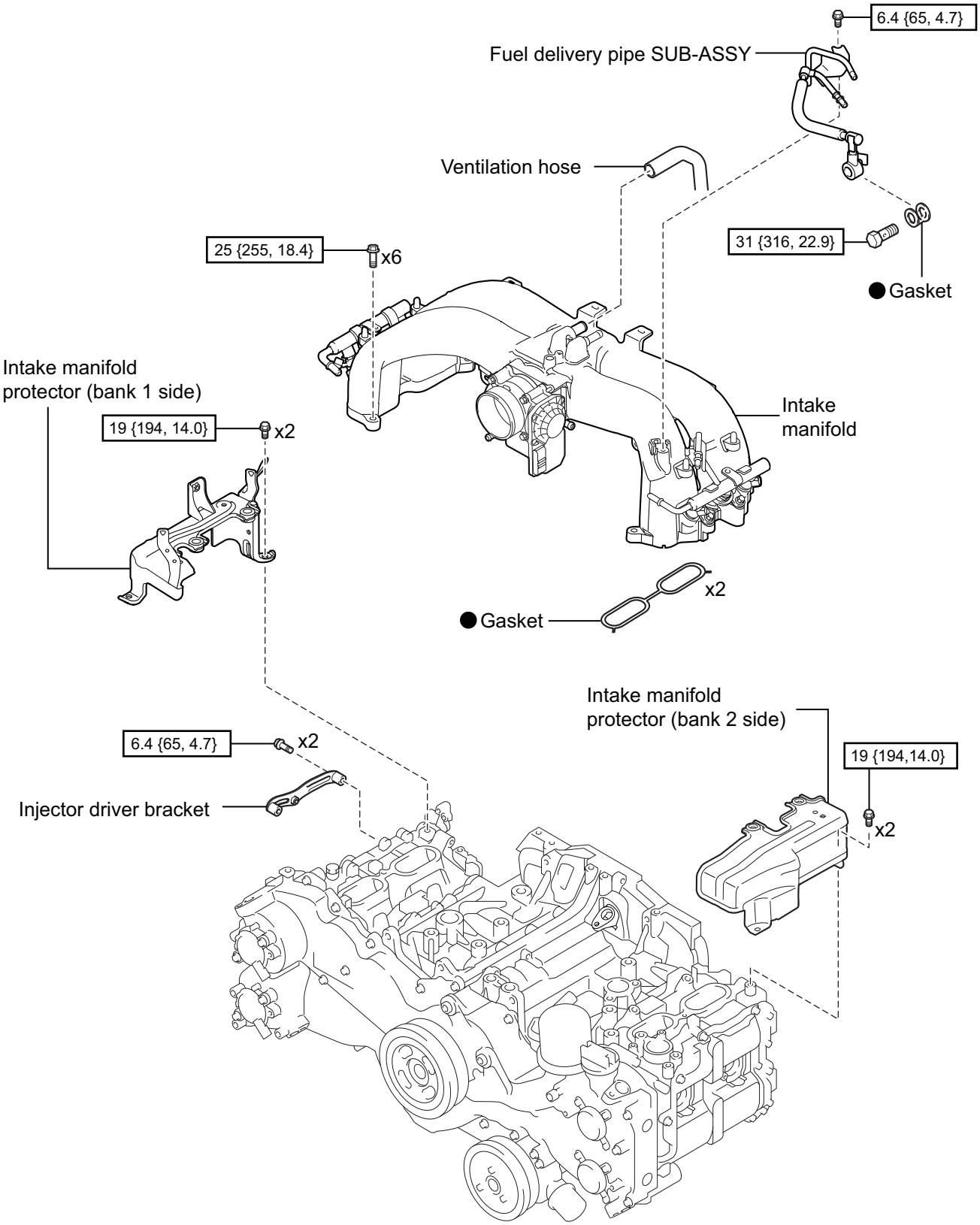

N*m {kgf*cm, ft*lbf}: Tightening torque ● Non-reusable part

ME-20542

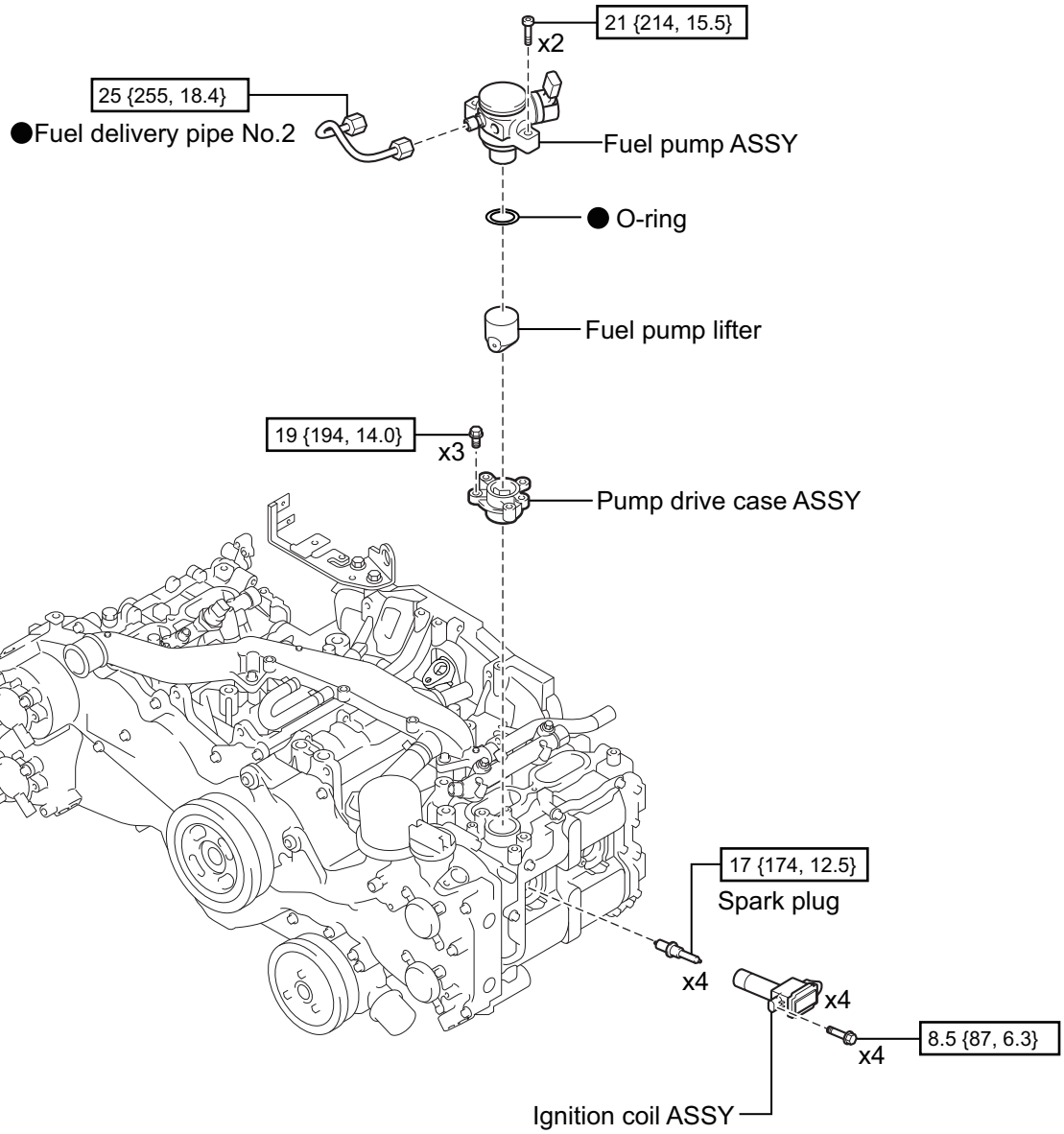

Transmission M/T:

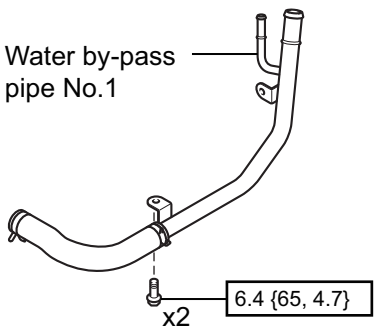

Transmission A/T:

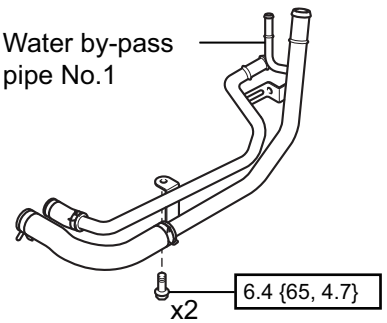

N*m {kgf*cm, ft*lbf} : Tightening torque ● Non-reusable part

ME-20543

EM

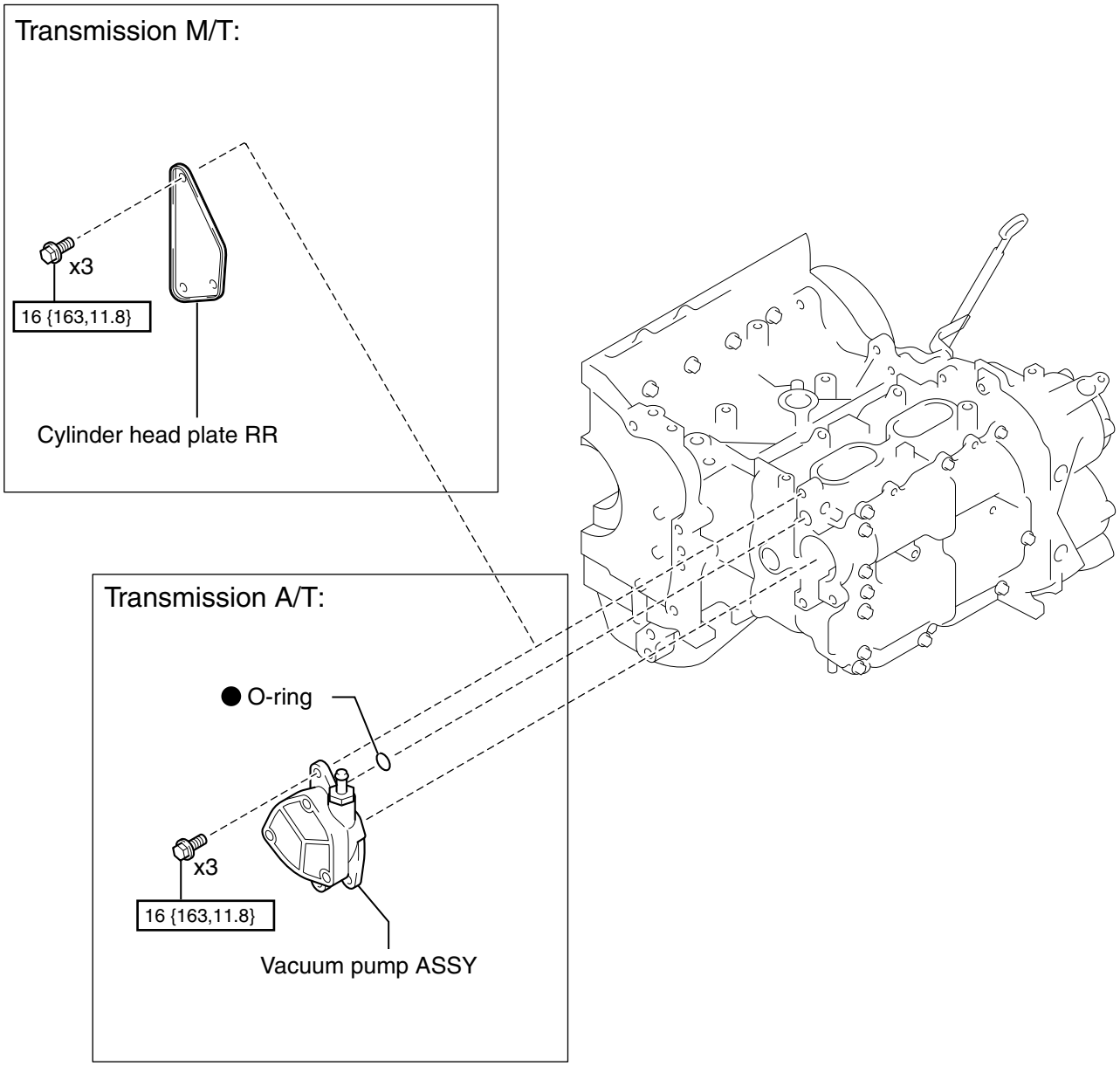
Transmission M/T:
x3
16 {163,11.8}
Cylinder head plate RR
Transmission A/T:
● O-ring
x3
16 {163,11.8}
Vacuum pump ASSY
N•m {kgf•cm, ft•lbf}: Tightening torque
● Non-reusable parts
ME-06937

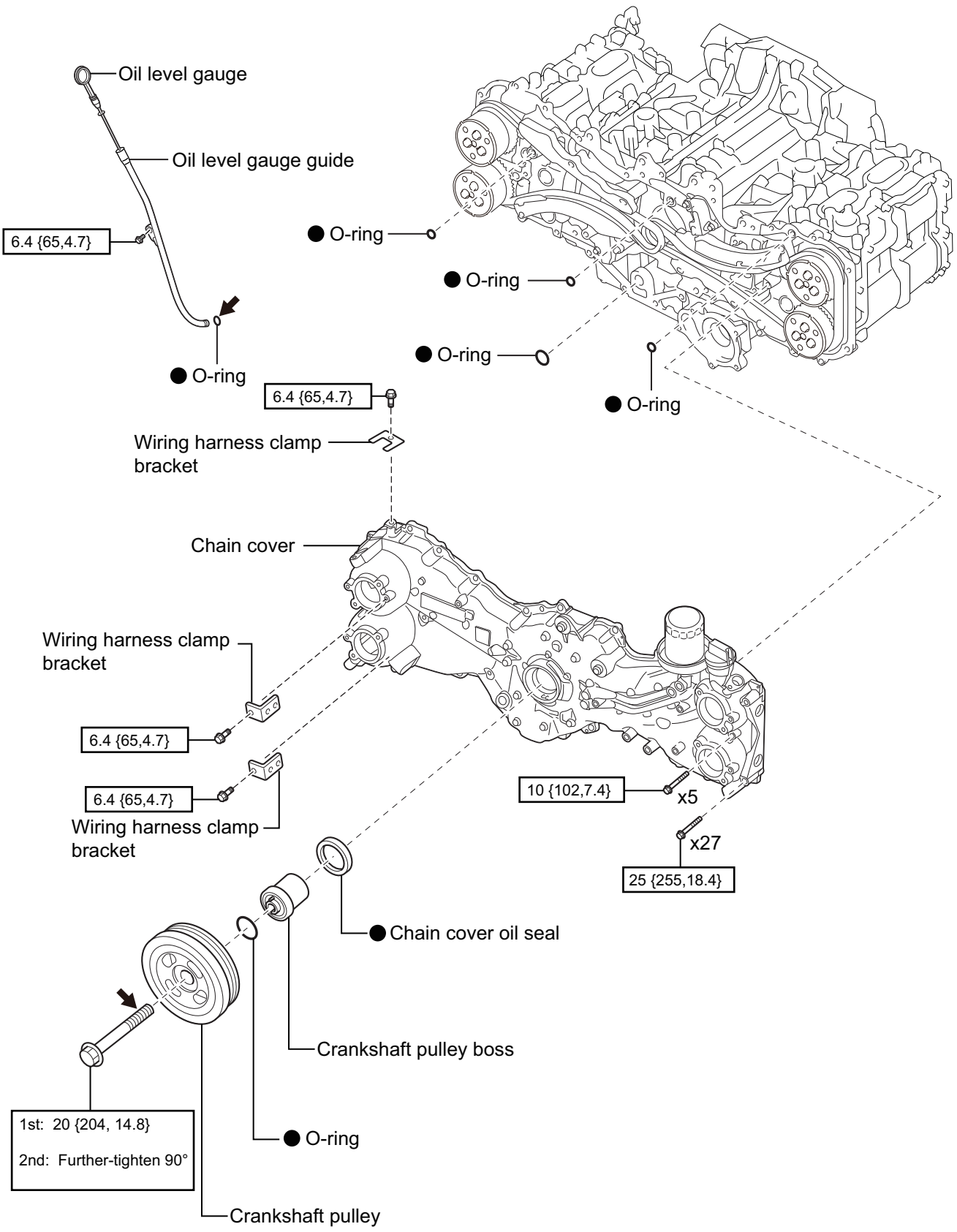

N*m {kgf*cm, ft*lbf}: Tightening torque ● Non-reusable part ← Oil application

ME-20866

EM

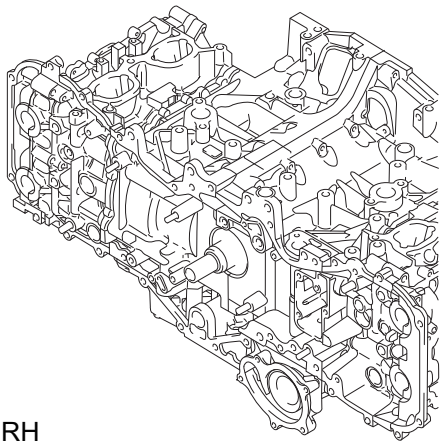

18 {184, 13.3} x3

Intake cam sprocket RH

Exhaust cam sprocket RH

18 {184, 13.3} x3

Chain guide

6.4 {65, 4.7}

● O-ring

Chain tensioner No. 2

6.4 {65, 4.7} x2

Chain tension lever

Timing chain

18 {184, 13.3} x3

Intake cam sprocket LH

Crankshaft sprocket

Timing chain

Chain tension lever

18 {184, 13.3} x3

Exhaust cam sprocket LH

6.4 {65, 4.7} x2

Chain tensioner No. 1

6.4 {65, 4.7}

Chain guide

N*m {kgf*cm, ft*lbf} : Tightening torque ● Non-reusable part

ME-20545

Bank 1:

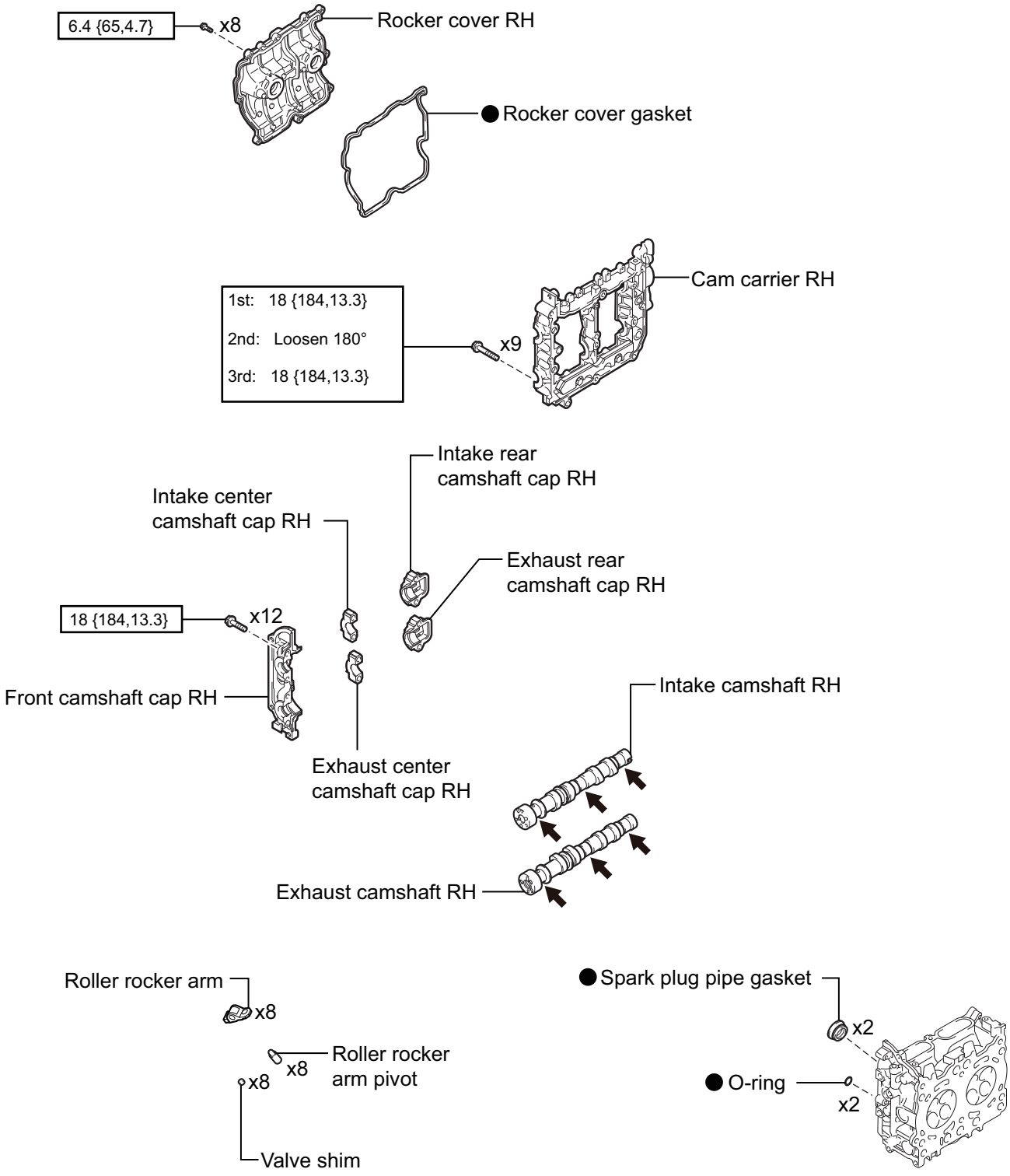

N*m {kgf*cm,ft*lbf} : Tightening torque ● Non-reusable parts ← Oil application

ME-21383

EM

Bank 2:

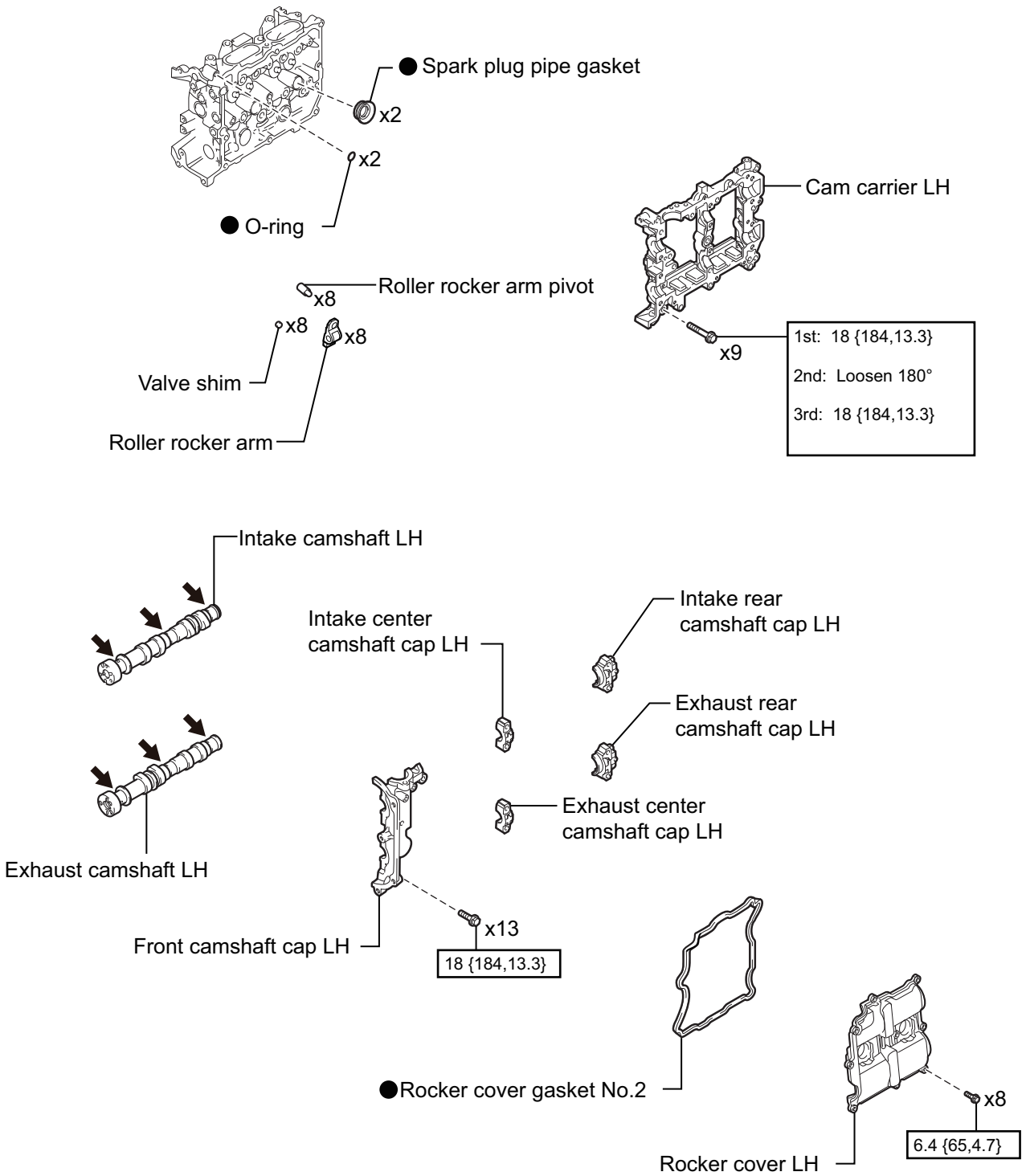

N*m {kgf*cm,ft*lbf} : Tightening torque

● Non-reusable parts

◀ Oil application

ME-21384

Removal

1. Engine stand Installation (Refer to EM - 86)
2. Removal of engine hanger (Refer to EM - 87)
3. Removal of alternator cover (Refer to EM - 6)
4. Removal of A/C cover (Refer to EM - 7)
5. Removal of V-belt (Refer to EM - 7)
6. Generator ASSY removal (Refer to BH - 31)
7. Oil level gauge guide removal (Refer to LU - 15)
8. Idler pulley SUB-ASSY NO. 1 and NO. 2 removal (Refer to LU - 15)
9. V-ribbed belt tensioner ASSY removal (Refer to LU - 15)
10. Removal of intake manifold protector (bank 1 side) (Refer to FU - 22)
11. Removal of intake manifold protector (bank 2 side) (Refer to FU - 23)
12. Fuel delivery pipe SUB-ASSY removal (Refer to IE - 15)
13. Disconnection of ventilation hose (Refer to IE - 17)
14. Removal of intake manifold (Refer to IE - 15)
15. Removal of fuel delivery pipe (bank 2 side) (Refer to FU - 31)
16. Removal of fuel delivery pipe (bank 1 side) (Refer to FU - 32)
17. Fuel pump ASSY removal (Refer to FU - 59)
18. Fuel pump lifter removal (Refer to FU - 59)
19. Pump drive case ASSY removal (Refer to FU - 59)
20. Vacuum pump ASSY removal (transmission A/T) (Refer to BR - 34)
21. Cylinder head plate RR removal (transmission M/T) (Refer to EM - 89)
22. Water by-pass pipe NO. 1 removal (transmission A/T) (Refer to EM - 89)
23. Water by-pass pipe NO. 1 removal (transmission M/T) (Refer to EM - 89)
24. Crankshaft pulley removal (Refer to EM - 49)
25. Timing chain cover oil seal removal (Refer to EM - 50)
26. Engine wiring disconnection (Refer to LU - 14)
27. Chain cover removal (Refer to LU - 16)
28. Removal of timing chain (bank 1 side) (Refer to EM - 14)
29. Removal of timing chain (bank 2 side) (Refer to EM - 15)

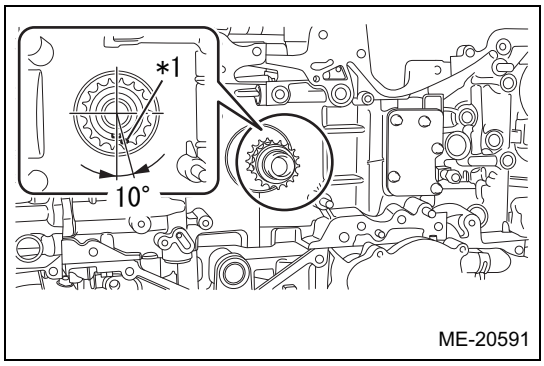

30. Piston and valve damage prevention procedure
    (1) Use the SST to turn the crankshaft approximately 200° clockwise and align the alignment marks of crankshaft sprocket to the position as shown in the figure.
    SST 18252AA000

Captions in illustration

*1	Alignment marks

CAUTION:
Never turn the crankshaft counterclockwise other than when fine-adjusting the alignment mark position. Otherwise the valve and piston may contact.

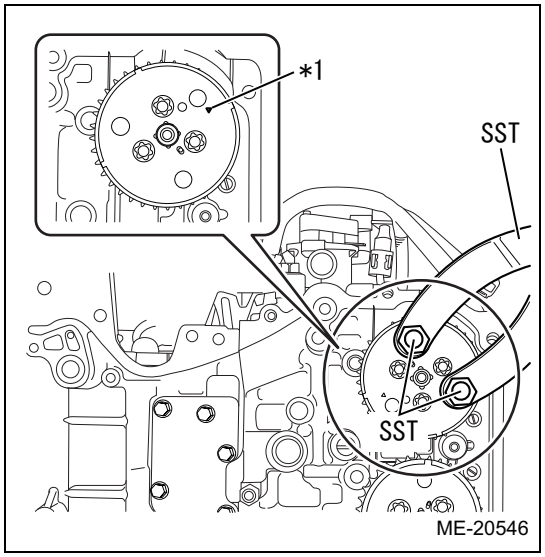

(2) Using the SST, turn the intake cam sprocket LH approximately 180° clockwise and align the alignment mark of intake cam sprocket LH to the position (zero-lift position) as shown in the figure.

Captions in illustration

*1	Alignment marks

SST 18355AA000, 18334AA020

CAUTION:

- Pay attention when performing the work, since the SST comes off easily.
- After this work, when the intake valve and exhaust valve lift at the same time, the valve heads contact each other and valve stems may bend. Do not turn the intake camshaft LH and exhaust camshaft LH to the outside of range of zero-lift (in range where it can be turned lightly by hand).

(3) Remove the SST from the crankshaft.

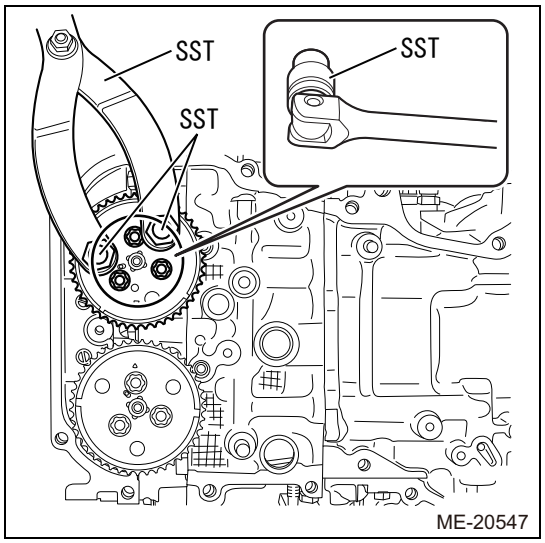

31. Intake cam sprocket RH removal

(1) Use the SST to secure the intake cam sprocket RH and remove the three bolts.

SST 18355AA000, 18334AA020, 18270KA010

CAUTION:

Pay attention when performing the work, since the SST comes off easily.

(2) Remove the intake cam sprocket RH.

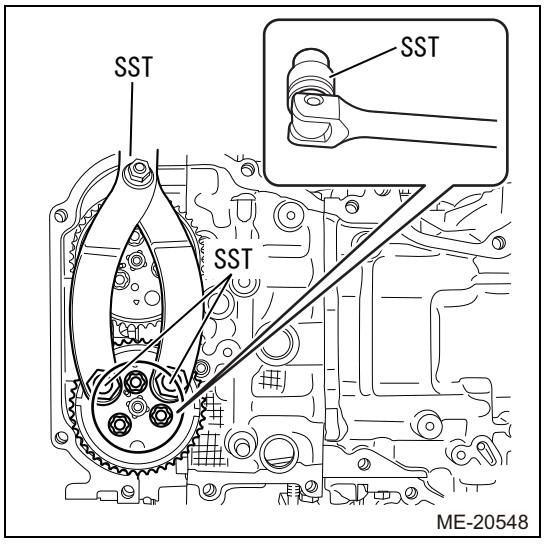

32. Exhaust cam sprocket RH removal

(1) Use the SST to secure the exhaust cam sprocket RH and remove the three bolts.

SST 18355AA000, 18334AA020, 18270KA010

CAUTION:

Pay attention when performing the work, since the SST comes off easily.

(2) Remove the exhaust cam sprocket RH.

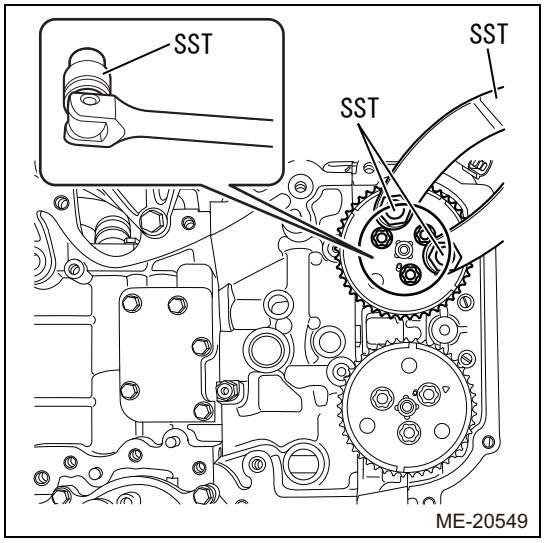

33. Intake cam sprocket LH removal
    (1) Use the SST to secure the intake cam sprocket LH and remove the three bolts.
    SST 18355AA000, 18334AA020, 18270KA010
    CAUTION:
    Pay attention when performing the work, since the SST comes off easily.
    (2) Remove the intake cam sprocket LH.

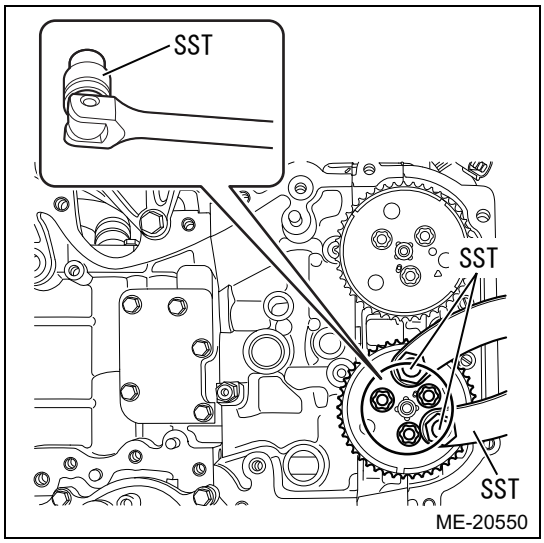

34. Exhaust cam sprocket LH removal
    (1) Use the SST to secure the exhaust cam sprocket LH and remove the three bolts.
    SST 18355AA000, 18334AA020, 18270KA010
    CAUTION:
    Pay attention when performing the work, since the SST comes off easily.
    (2) Remove the exhaust cam sprocket LH.

35. Ignition coil ASSY removal (bank 2 side) (Refer to ES - 691)
36. Spark plug removal (bank 2 side) (Refer to ES - 691)
37. Ignition coil ASSY removal (bank 1 side) (Refer to ES - 691)
38. Spark plug removal (bank 1 side) (Refer to ES - 692)
39. Removal of rocker cover RH (Refer to EM - 91)
40. Cam carrier RH removal (Refer to EM - 92)
41. Rocker cover LH removal (Refer to EM - 93)
42. Cam carrier LH removal (Refer to EM - 93)

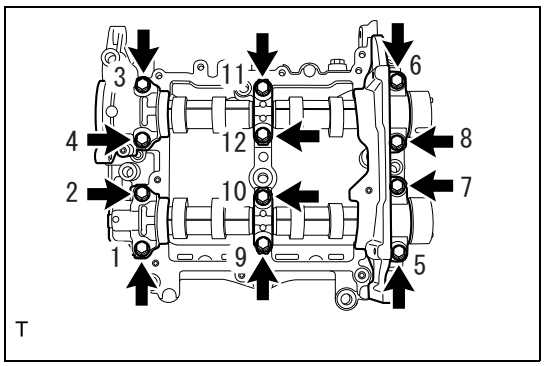

43. Camshaft cap removal (bank 1 side)
    (1) Loosen the 12 bolts a little at a time equally in the order as shown in the figure and remove them to remove the front camshaft cap RH, intake center camshaft cap RH, intake rear camshaft cap RH, exhaust center camshaft cap RH and exhaust rear camshaft cap RH.
    NOTE:
    The removed parts must be organized by installation location.

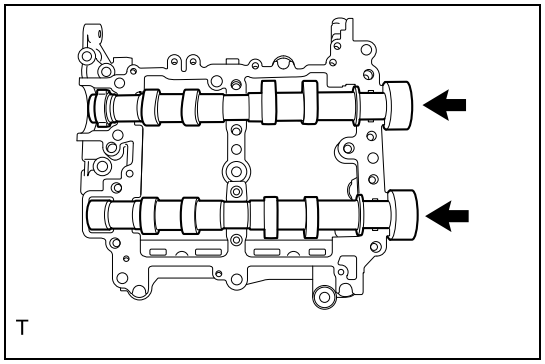

44. Camshaft removal (bank 1 side)
    (1) Remove the intake camshaft RH and exhaust camshaft RH from the cam carrier RH.

EM

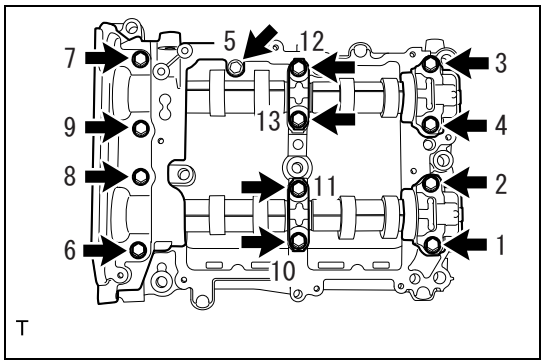

45. Camshaft cap removal (bank 2 side)
    (1) Loosen the 13 bolts a little at a time equally in the order as shown in the figure and remove them to remove the front camshaft cap LH, intake center camshaft cap LH, intake rear camshaft cap LH, exhaust center camshaft cap LH and exhaust rear camshaft cap LH.
    NOTE:
    The removed parts must be organized by installation location.

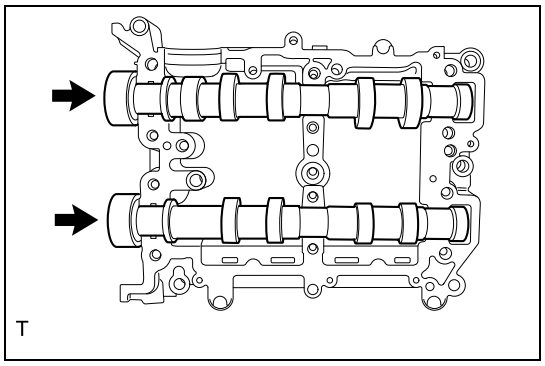

46. Camshaft removal (bank 2 side)
    (1) Remove the intake camshaft LH and exhaust camshaft LH from the cam carrier LH.

Installation

1. Camshaft installation (bank 2 side)
    (1) Apply new engine oil to the journal of cam carrier LH.

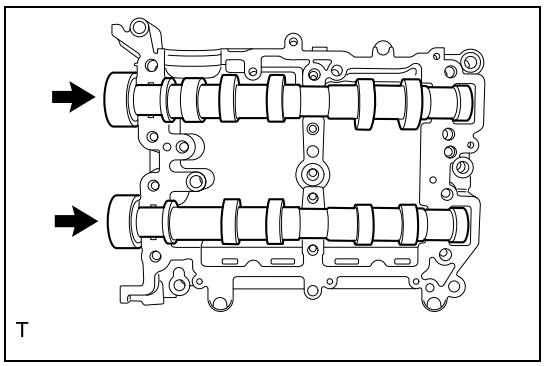

    (2) Install the intake camshaft LH and exhaust camshaft LH to the cam carrier LH.

2. Camshaft cap installation (bank 2 side)
    (1) Apply THREE BOND 1217G/1217H or equivalent to the mating surfaces of front camshaft cap LH, intake rear camshaft cap LH and exhaust rear camshaft cap LH as shown in the figure.

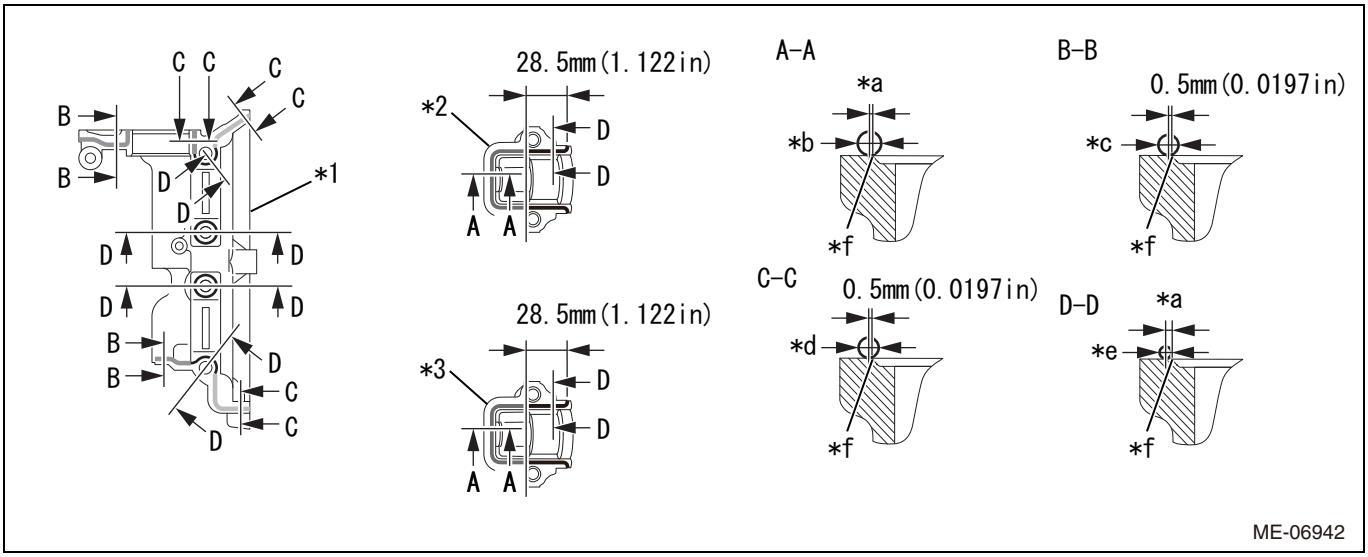

Captions in illustration

*1	Front camshaft cap LH	*2	Intake rear camshaft cap LH
*3	Exhaust rear camshaft cap LH	-	-
*a	1.0 mm {0.0394 in} or less	*b	Diameter: 3.0 to 4.0 mm {0.1181 to 0.1575 in}
*c	Diameter 2.5 to 3.5 mm {0.0984 to 0.1378 in}	*d	Diameter 2.5 to 4.0 mm {0.0984 to 0.1575 in}
*e	Diameter: 1.5 to 2.5 mm {0.0591 to 0.0984 in}	*f	Groove end

CAUTION:
- Clean and degrease the installation surface.
- Do not apply liquid gasket excessively, doing so cause engine seizure.
- Do not apply liquid gasket to the intake center camshaft cap LH and exhaust center camshaft cap LH.
- Install within 5 min. after applying liquid gasket.

(2) Apply new engine oil to the journals of each camshaft cap and set it to the cam carrier LH.

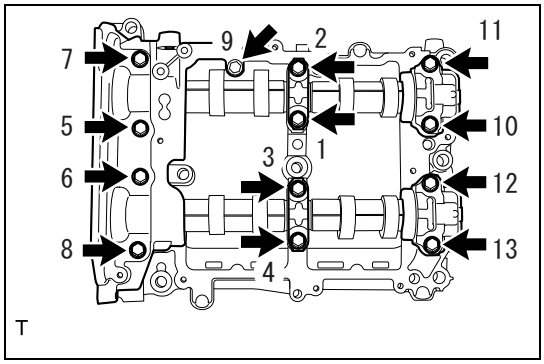

(3) Tighten the 13 bolts in the order as shown in the figure and install the front camshaft cap LH, intake center camshaft cap LH, intake rear camshaft cap LH, exhaust center camshaft cap LH and exhaust rear camshaft cap LH.
Standard value:T=18N·m {184kgf·cm} {13.3ft·lbf}

3. Camshaft installation (bank 1 side)

(1) Apply new engine oil to the journal of cam carrier RH.

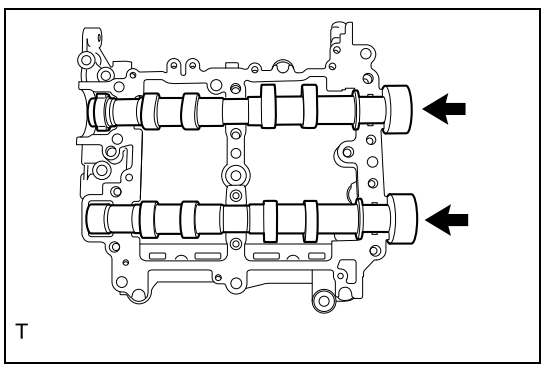

(2) Install the intake camshaft RH and exhaust camshaft RH to the cam carrier.

4. Camshaft cap installation (bank 1 side)
   (1) Apply THREE BOND 1217G/1217H or equivalent to the mating surfaces of front camshaft cap RH, intake rear camshaft cap RH and exhaust rear camshaft cap RH as shown in the figure.

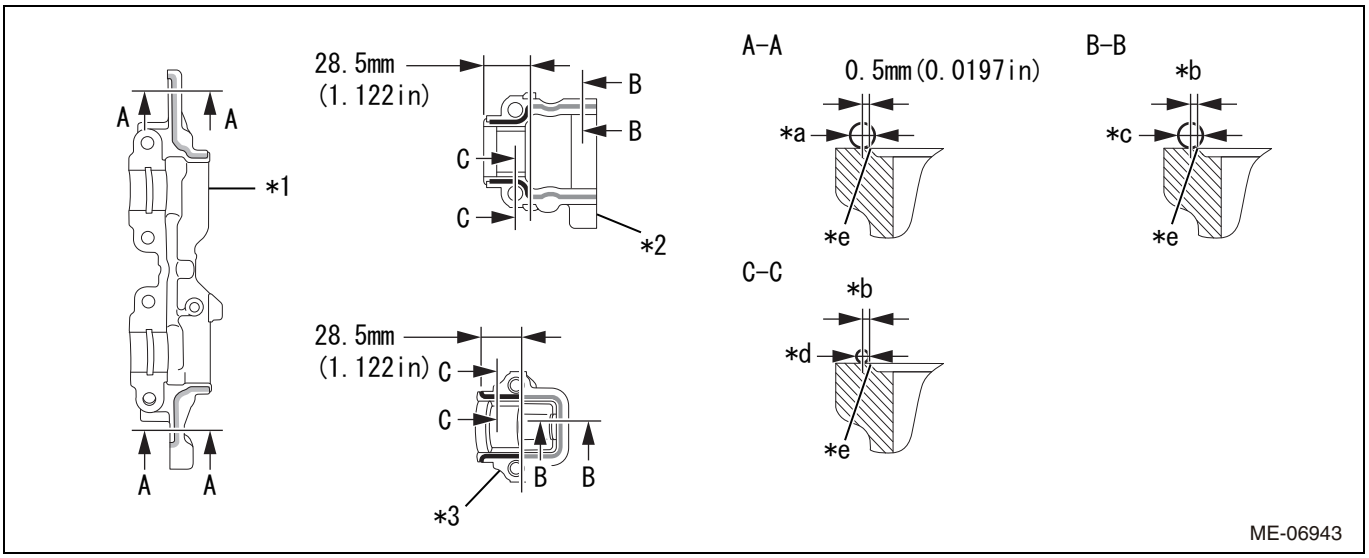

Captions in illustration

*1	Front camshaft cap RH	*2	Intake rear camshaft cap RH
*3	Exhaust rear camshaft cap RH	-	-
a	Diameter 2.5 to 4.0 mm {0.0984 to 0.1575 in}	b	1.0 mm {0.0394 in} or less
c	Diameter: 3.0 to 4.0 mm {0.1181 to 0.1575 in}	d	Diameter: 1.5 to 2.5 mm {0.0591 to 0.0984 in}
e	Groove end	-	-

CAUTION:
- Clean and degrease the installation surface.
- Do not apply liquid gasket excessively, doing so cause engine seizure.
- Do not apply liquid gasket to the intake center camshaft cap RH and exhaust center camshaft cap RH.
- Install within 5 min. after applying liquid gasket.

   (2) Apply new engine oil to the journals of each camshaft cap and set it to the cam carrier RH.

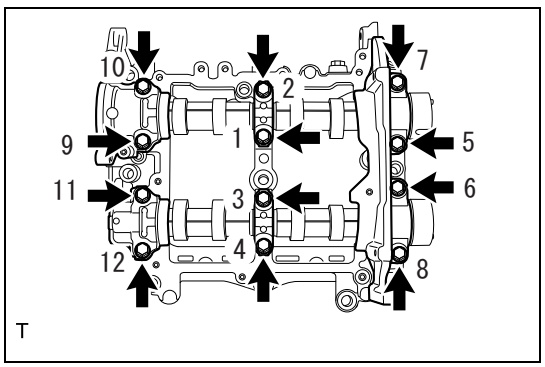

   (3) Tighten the 12 bolts in the order as shown in the figure and install the front camshaft cap RH, intake center camshaft cap RH, intake rear camshaft cap RH, exhaust center camshaft cap RH and exhaust rear camshaft cap RH.
   Standard value:T=18N·m {184kgf·cm} {13.3ft·lbf}

5. Cam carrier LH installation (Refer to EM - 98)
6. Installation of rocker cover LH (Refer to EM - 101)
7. Cam carrier RH installation (Refer to EM - 102)
8. Installation of rocker cover RH (Refer to EM - 105)
9. Spark plug installation (bank 1 side) (Refer to ES - 692)
10. Installation of ignition coil ASSY (bank 1 side) (Refer to ES - 692)
11. Spark plug installation (bank 2 side) (Refer to ES - 692)
12. Installation of ignition coil ASSY (bank 2 side) (Refer to ES - 692)
13. Exhaust cam sprocket LH installation
    CAUTION:
    Before installation, check that there is no foreign matter on the exhaust cam sprocket LH and exhaust camshaft LH.

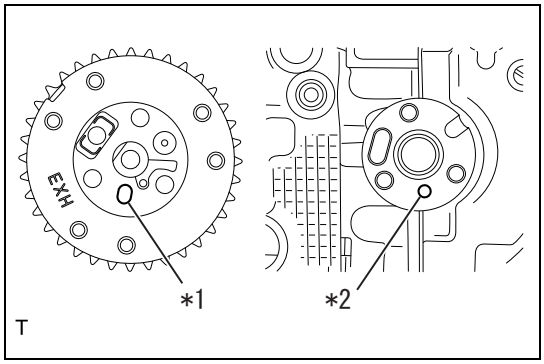

(1) Install the exhaust cam sprocket LH by aligning the knock hole of exhaust cam sprocket LH and the knock pin of exhaust camshaft LH.

Captions in illustration

*1	Knock hole
*2	Knock pin

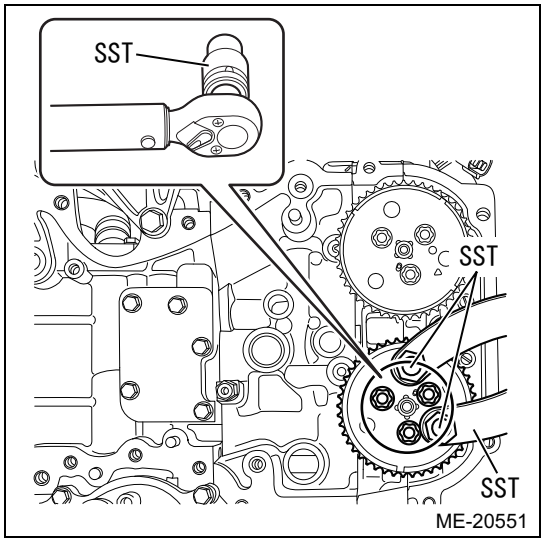

(2) Use the SST to secure the exhaust cam sprocket LH and tighten the three bolts.
SST 18355AA000, 18334AA020, 18270KA010
Standard value:T=18N·m {184kgf·cm} {13.3ft·lbf}
CAUTION:
Pay attention when performing the work, since the SST comes off easily.

14. Intake cam sprocket LH installation
CAUTION:
Before installation, check that there is no foreign matter on the intake cam sprocket LH and intake camshaft LH.

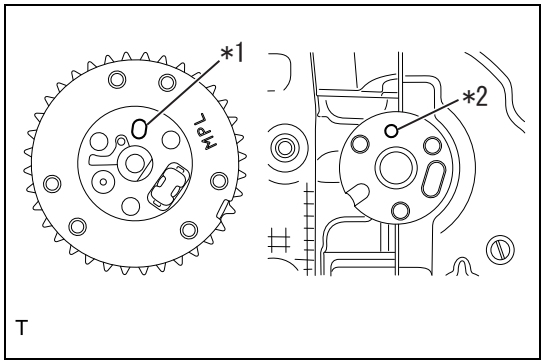

(1) Install the intake cam sprocket LH by aligning the knock hole of intake cam sprocket LH and the knock pin of intake camshaft LH.

Captions in illustration

*1	Knock hole
*2	Knock pin

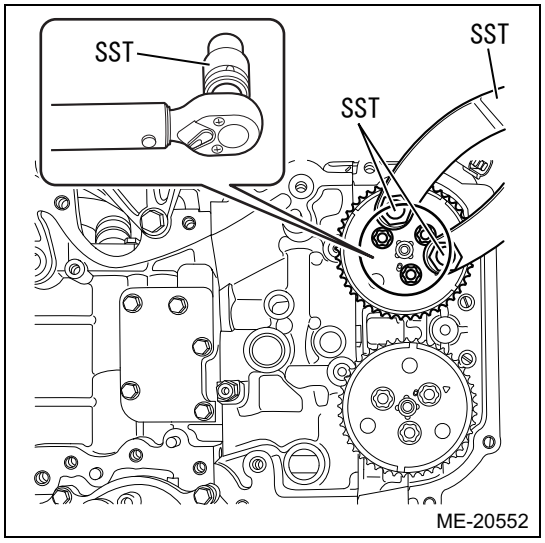

(2) Use the SST to secure the intake cam sprocket LH and tighten the three bolts.
SST 18355AA000, 18334AA020, 18270KA010
Standard value:T=18N·m {184kgf·cm} {13.3ft·lbf}
CAUTION:
Pay attention when performing the work, since the SST comes off easily.

15. Exhaust cam sprocket RH installation
CAUTION:
Before installation, check that there is no foreign matter on the exhaust cam sprocket RH and exhaust camshaft RH.

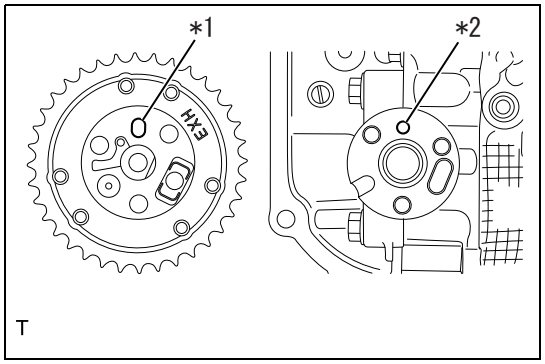

(1) Install the exhaust cam sprocket RH by aligning the knock hole of exhaust cam sprocket RH and the knock pin of exhaust camshaft RH.

Captions in illustration

*1	Knock hole
*2	Knock pin

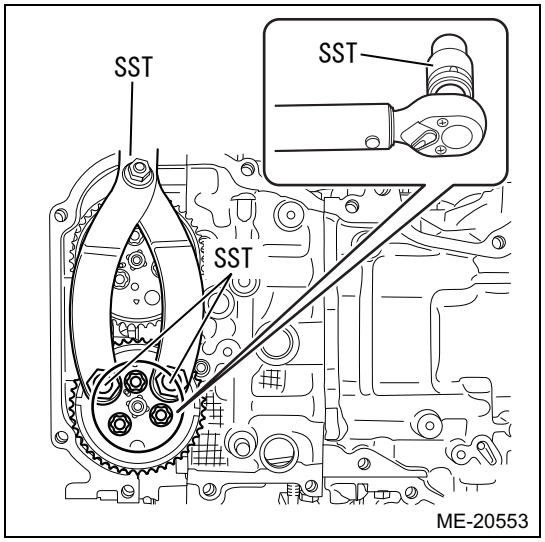

(2) Use the SST to secure the exhaust cam sprocket RH and tighten the three bolts.
SST 18355AA000, 18334AA020, 18270KA010
Standard value:T=18N·m {184kgf·cm} {13.3ft·lbf}
CAUTION:
Pay attention when performing the work, since the SST comes off easily.

16. Intake cam sprocket RH installation
CAUTION:
Before installation, check that there is no foreign matter on the intake cam sprocket RH and intake camshaft RH.

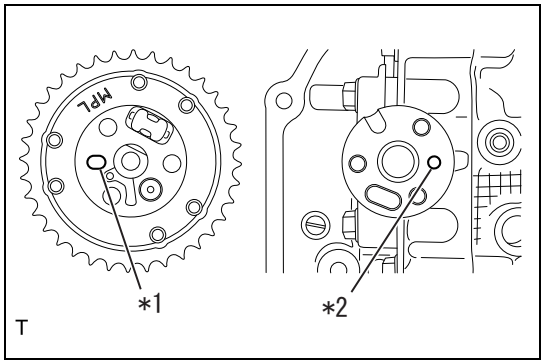

(1) Install the intake cam sprocket RH by aligning the knock hole of intake cam sprocket RH and the knock pin of intake camshaft RH.

Captions in illustration

*1	Knock hole
*2	Knock pin

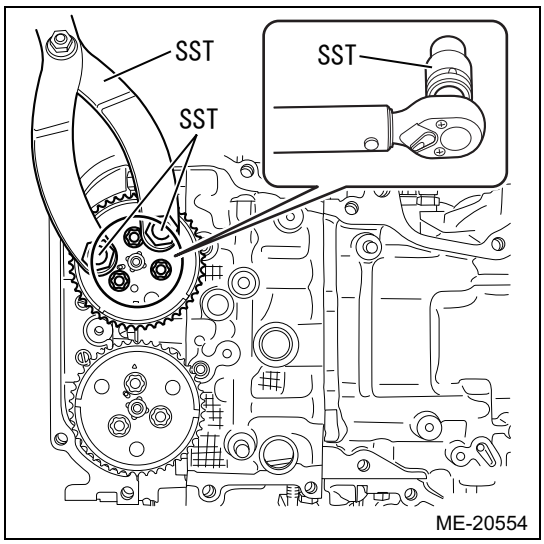

(2) Use the SST to secure the intake cam sprocket RH and tighten the three bolts.
SST 18355AA000, 18334AA020, 18270KA010
Standard value:T=18N·m {184kgf·cm} {13.3ft·lbf}
CAUTION:
Pay attention when performing the work, since the SST comes off easily.

17. Timing chain installation (bank 2 side) (Refer to EM - 16)
18. Timing chain installation (bank 1 side) (Refer to EM - 18)
19. Chain cover installation (Refer to LU - 25)
20. Engine wiring connection (Refer to LU - 29)
21. Chain cover oil seal installation (Refer to EM - 50)
22. Crankshaft pulley installation (Refer to EM - 50)
23. Water by-pass pipe NO. 1 installation (transmission M/T) (Refer to EM - 107)
24. Water by-pass pipe NO. 1 installation (transmission A/T) (Refer to EM - 107)
25. Cylinder head plate RR installation (transmission M/T) (Refer to EM - 107)
26. Vacuum pump ASSY installation (transmission A/T) (Refer to BR - 35)
27. Installation of pump drive case ASSY (Refer to FU - 60)
28. Fuel pump lifter installation (Refer to FU - 60)
29. Fuel pump ASSY installation (Refer to FU - 60)
30. Fuel delivery pipe (bank 1 side) installation (Refer to FU - 38)
31. Installation of fuel delivery pipe (bank 2 side) (Refer to FU - 38)
32. Installation of intake manifold (Refer to IE - 28)
33. Ventilation hose connection (Refer to IE - 28)
34. Fuel delivery pipe SUB-ASSY installation (Refer to IE - 28)
35. Installation of intake manifold protector (bank 2 side) (Refer to FU - 28)
36. Installation of intake manifold protector (bank 1 side) (Refer to FU - 28)
37. V-ribbed belt tensioner ASSY installation (Refer to LU - 28)
38. Oil level gauge guide installation (Refer to LU - 29)
39. Idler pulley SUB-ASSY NO. 1 and NO. 2 installation (Refer to LU - 28)
40. Generator ASSY installation (Refer to BH - 35)

41. V-belt installation (Refer to EM - 7)
42. Installation of A/C cover (Refer to EM - 7)
43. Installation of alternator cover (Refer to EM - 8)
44. Installation of engine hanger (Refer to EM - 85)
45. Removal of engine stand (Refer to EM - 109)

Cylinder head gasket (FA20)

Exploded view

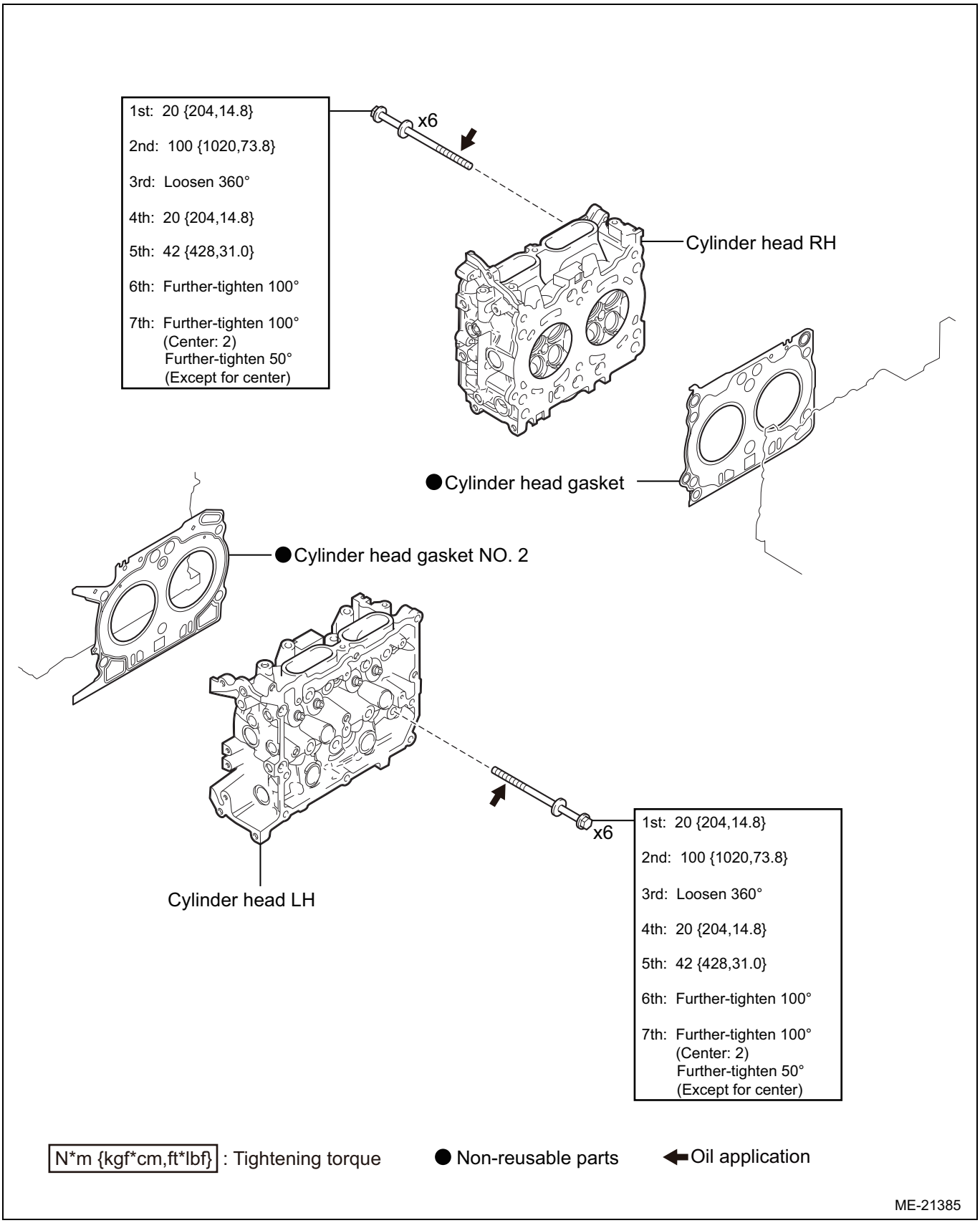

Removal

1. Cam carrier RH removal (Refer to EM - 75)

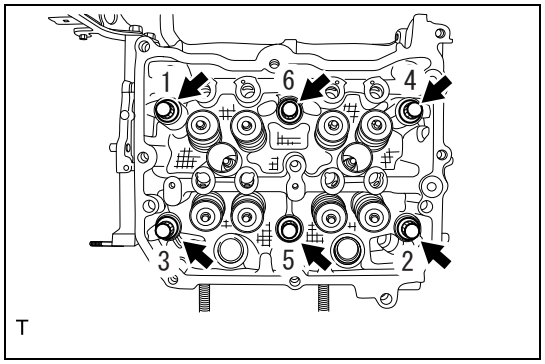

2. Cylinder head RH removal
   (1) Loosen the six cylinder head bolts equally in the order as shown in the figure.
   (2) Tap the cylinder head RH with a plastic hammer to separate it from cylinder block.
   (3) Remove the cylinder head RH.
   CAUTION:
   Be careful not to scratch the mating surface of cylinder head and cylinder block.

EM

3. Cylinder head gasket removal
   (1) Remove the cylinder head gasket.
4. Cam carrier LH removal (Refer to EM - 75)

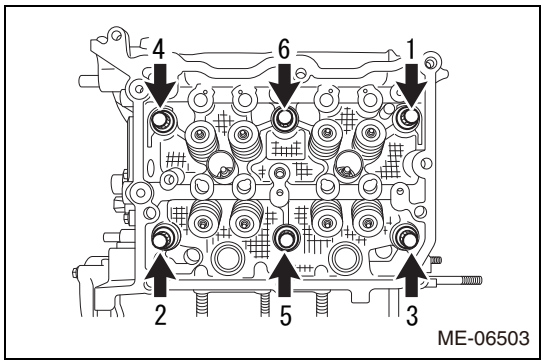

5. Cylinder head LH removal
   (1) Loosen the six cylinder head bolts equally in the order as shown in the figure.
   (2) Tap the cylinder head LH with a plastic hammer to separate it from cylinder block.
   (3) Remove the cylinder head LH.
   CAUTION:
   Be careful not to scratch the mating surface of cylinder head and cylinder block.
6. Cylinder head gasket NO. 2 removal
   (1) Remove the cylinder head gasket NO. 2.

Installation

1. Cylinder head gasket NO. 2 installation
   (1) Operate the engine stand, and make the bank 2 side face upward.
   (2) Clean the bolt holes in the cylinder block (block 2 side).
   CAUTION:
   To avoid erroneous tightening of the bolts, clean out the bolt holes sufficiently by blowing with compressed air to eliminate engine coolant etc.
   (3) Apply THREE BOND 1217G/1217H or equivalent to both sides of a new cylinder head gasket NO. 2 as shown in the figure.

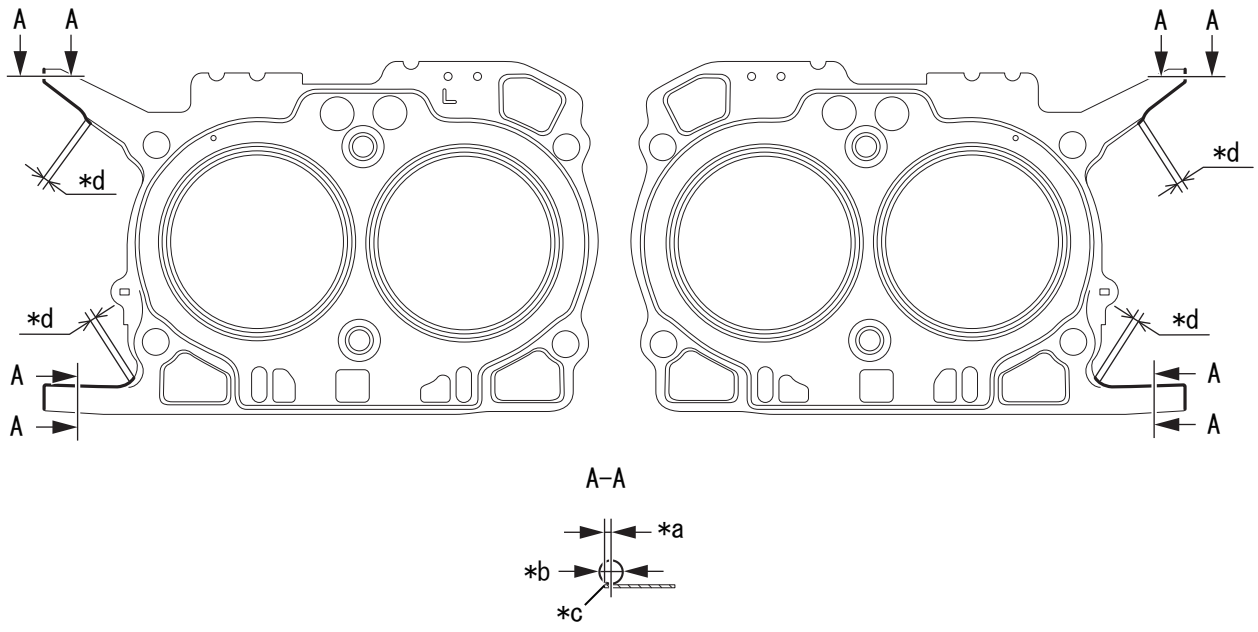

ME-20074

Captions in illustration

*a	0 to 1.0 mm {0 to 0.039 in}	*b	Diameter: 2.0 to 4.0 mm {0.079 to 0.158 in}
*c	Gasket edge	*d	Overlap space of bead end and liquid gasket 3.0 to 10.0 mm {0.12 to 0.39 in}

CAUTION:
- Clean and degrease the installation surface.
- Install within 5 min. after applying liquid gasket.

(4) Install the cylinder head gasket NO. 2.

2. Cylinder head LH installation
   (1) Clean the cylinder head bolt threads and apply sufficient new engine oil to the washer and cylinder head bolts threads.
   (2) Set the cylinder block (bank 2 side) on the cylinder head LH.

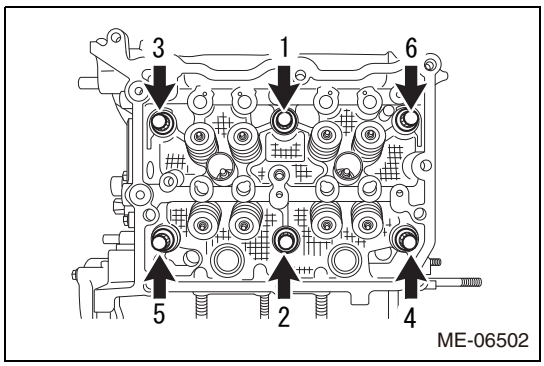

ME-06502

(3) Tighten the six cylinder head bolts in the order as shown in the figure.
Standard value:T=20N·m {204kgf·cm} {14.8ft·lbf}

(4) Retighten the six cylinder head bolts in the same order.
Standard value:T=100N·m {1020kgf·cm} {73.8ft·lbf}

CAUTION:
If the bolt makes stick-slip sound during tightening, clean the bolt holes and installation surface, dry them completely, and then repeat the steps from the application of seal gasket.

NOTE:
When repeating the steps, the cylinder head gasket can be reused.

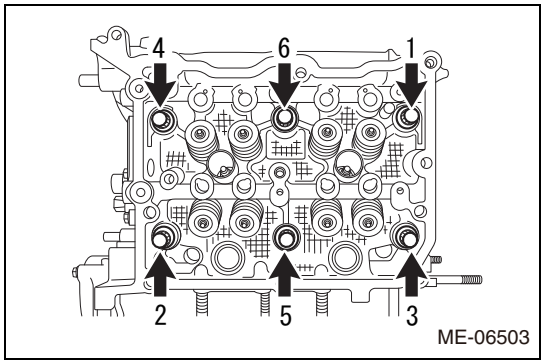

(5) Loosen the six cylinder head bolts by 360° in the order as shown in the figure.

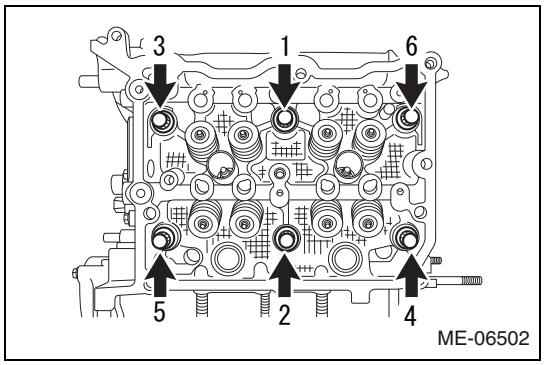

(6) Tighten the six cylinder head bolts in the order as shown in the figure.
Standard value:T=20N·m {204kgf·cm} {14.8ft·lbf}

(7) Retighten the six cylinder head bolts in the same order.
Standard value:T=42N·m {428kgf·cm} {31.0ft·lbf}

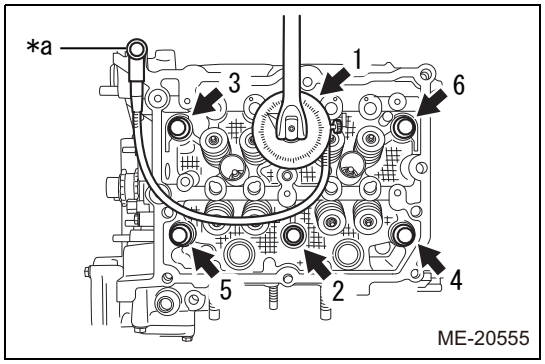

(8) Retighten the six cylinder head bolts by 100° using an angle gauge in the order as shown in the figure.

Captions in illustration

*a	Temporary bolt

NOTE:
Install a temporary bolt to secure an angle gauge as required.

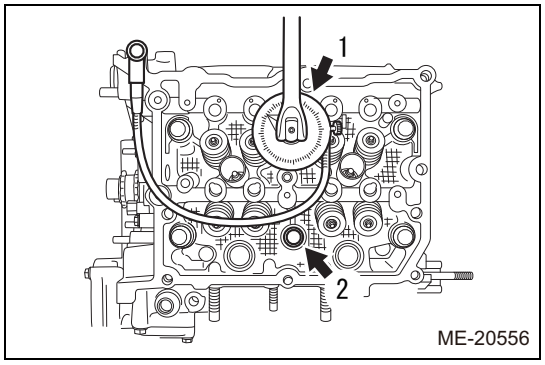

(9) Retighten the two cylinder head bolts by 100° using an angle gauge in the order as shown in the figure.

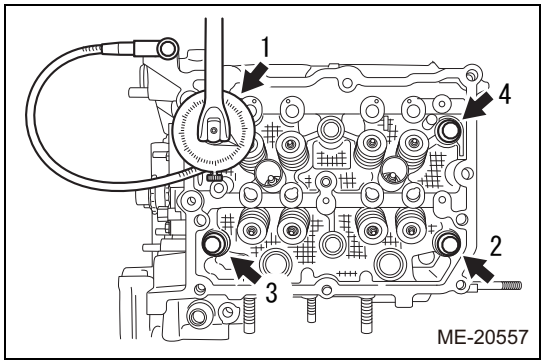

(10) Retighten the four cylinder head bolts by 50° using an angle gauge in the order as shown in the figure.

3. Cam carrier LH installation (Refer to EM - 96)

4. Cylinder head gasket installation
   (1) Operate the engine stand, and make the bank 1 side face upward.
   (2) Clean the bolt holes in the cylinder block (block 1 side).
   CAUTION:
   To avoid erroneous tightening of the bolts, clean out the bolt holes sufficiently by blowing with compressed air to eliminate engine coolant etc.
   (3) Apply THREE BOND 1217G/1217H or equivalent to both sides of a new cylinder head gasket as shown in the figure.

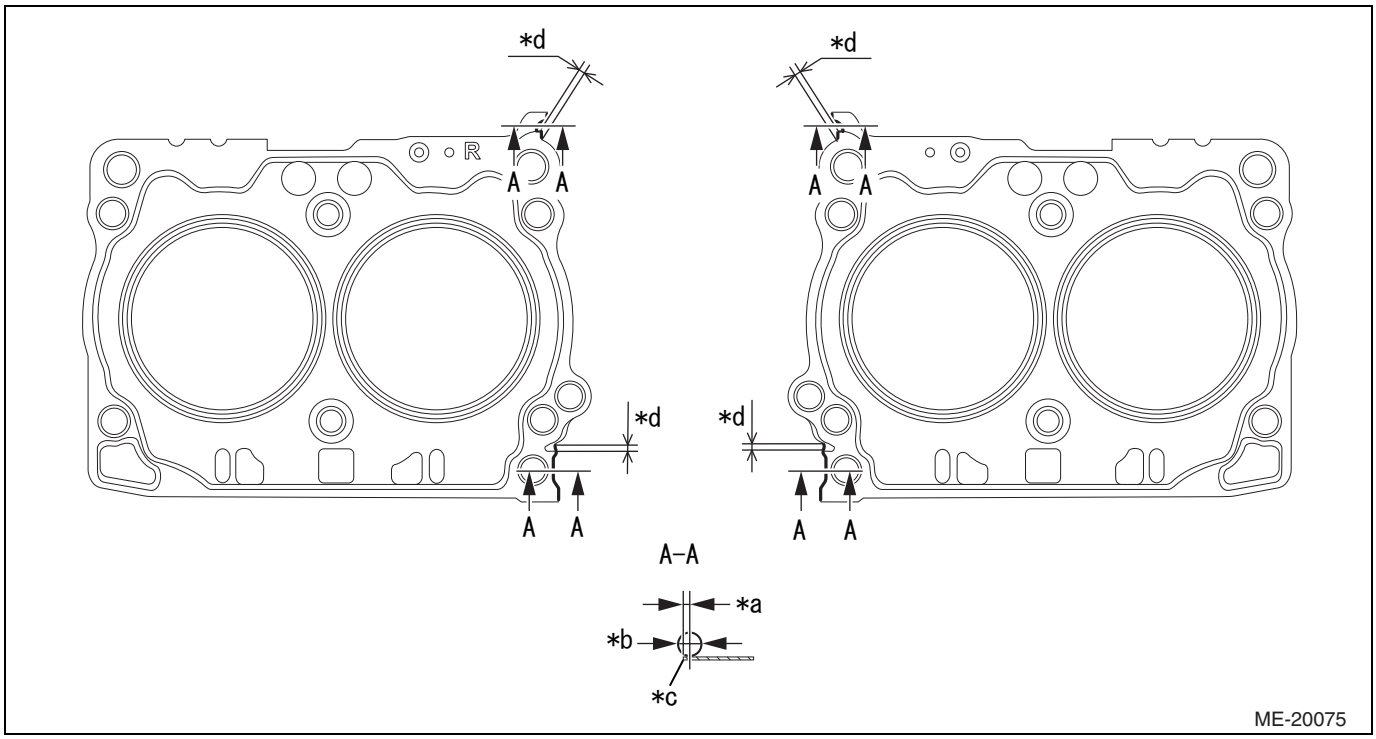

Captions in illustration

*a	0 to 1.0 mm {0 to 0.039 in}	*b	Diameter: 2.0 to 4.0 mm {0.079 to 0.158 in}
*c	Gasket edge	*d	Overlap space of bead end and liquid gasket 3.0 to 10.0 mm {0.12 to 0.39 in}

   CAUTION:
   - Clean and degrease the installation surface.
   - Install within 5 min. after applying liquid gasket.

   (4) Attach the cylinder head gasket.

5. Cylinder head RH installation
   (1) Clean the cylinder head bolt threads and apply sufficient new engine oil to the washer and cylinder head bolts threads.
   (2) Set the cylinder block (bank 1 side) on the cylinder head RH.

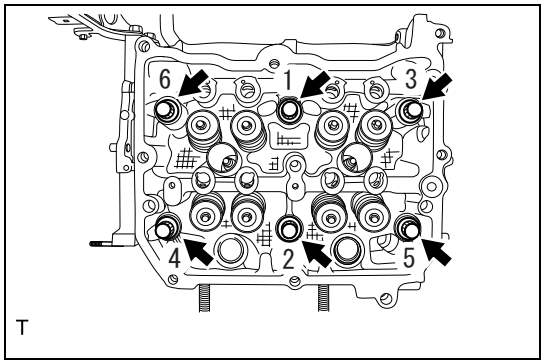

(3) Tighten the six cylinder head bolts in the order as shown in the figure.
Standard value:T=20N·m {204kgf·cm} {14.8ft·lbf}

EM

(4) Retighten the six cylinder head bolts in the same order.
Standard value:T=100N·m {1020kgf·cm} {73.8ft·lbf}
CAUTION:
If the bolt makes stick-slip sound during tightening, clean the bolt holes and installation surface, dry them completely, and then repeat the steps from the application of seal gasket.
NOTE:
When repeating the steps, the cylinder head gasket can be reused.

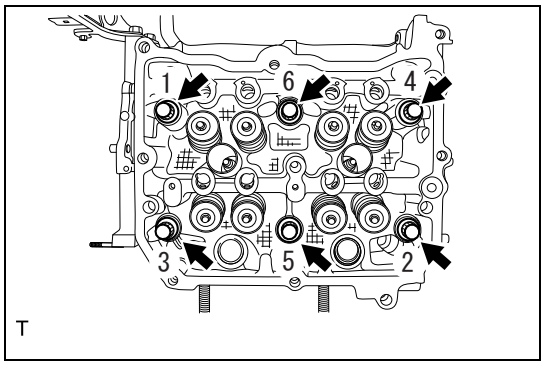

(5) Loosen the six cylinder head bolts by 360° in the order as shown in the figure.

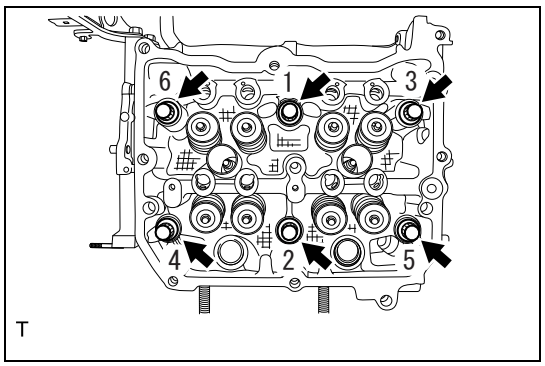

(6) Tighten the six cylinder head bolts in the order as shown in the figure.
Standard value:T=20N·m {204kgf·cm} {14.8ft·lbf}

(7) Retighten the six cylinder head bolts in the same order.
Standard value:T=42N·m {428kgf·cm} {31.0ft·lbf}

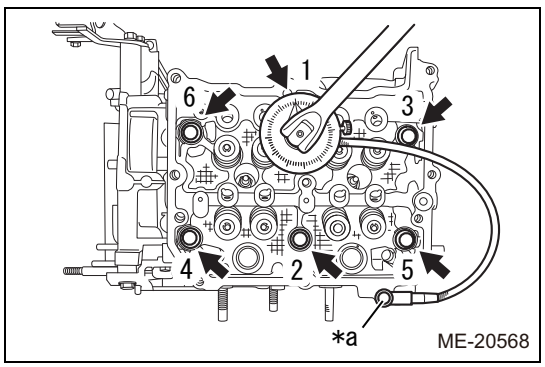

(8) Retighten the six cylinder head bolts by 100° using an angle gauge in the order as shown in the figure.

Captions in illustration

*a	Temporary bolt

NOTE:
Install a temporary bolt to secure an angle gauge as required.

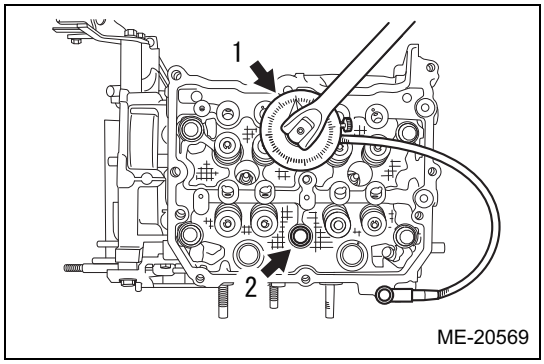

(9) Retighten the two cylinder head bolts by 100° using an angle gauge in the order as shown in the figure.

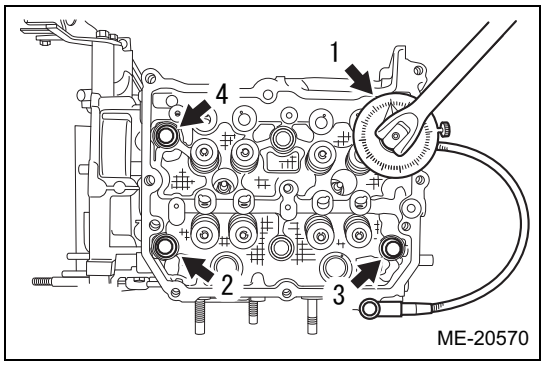

(10) Retighten the four cylinder head bolts by 50° using an angle gauge in the order as shown in the figure.

6. Cam carrier RH installation (Refer to EM - 96)

Chain cover oil seal (FA20)

Exploded view

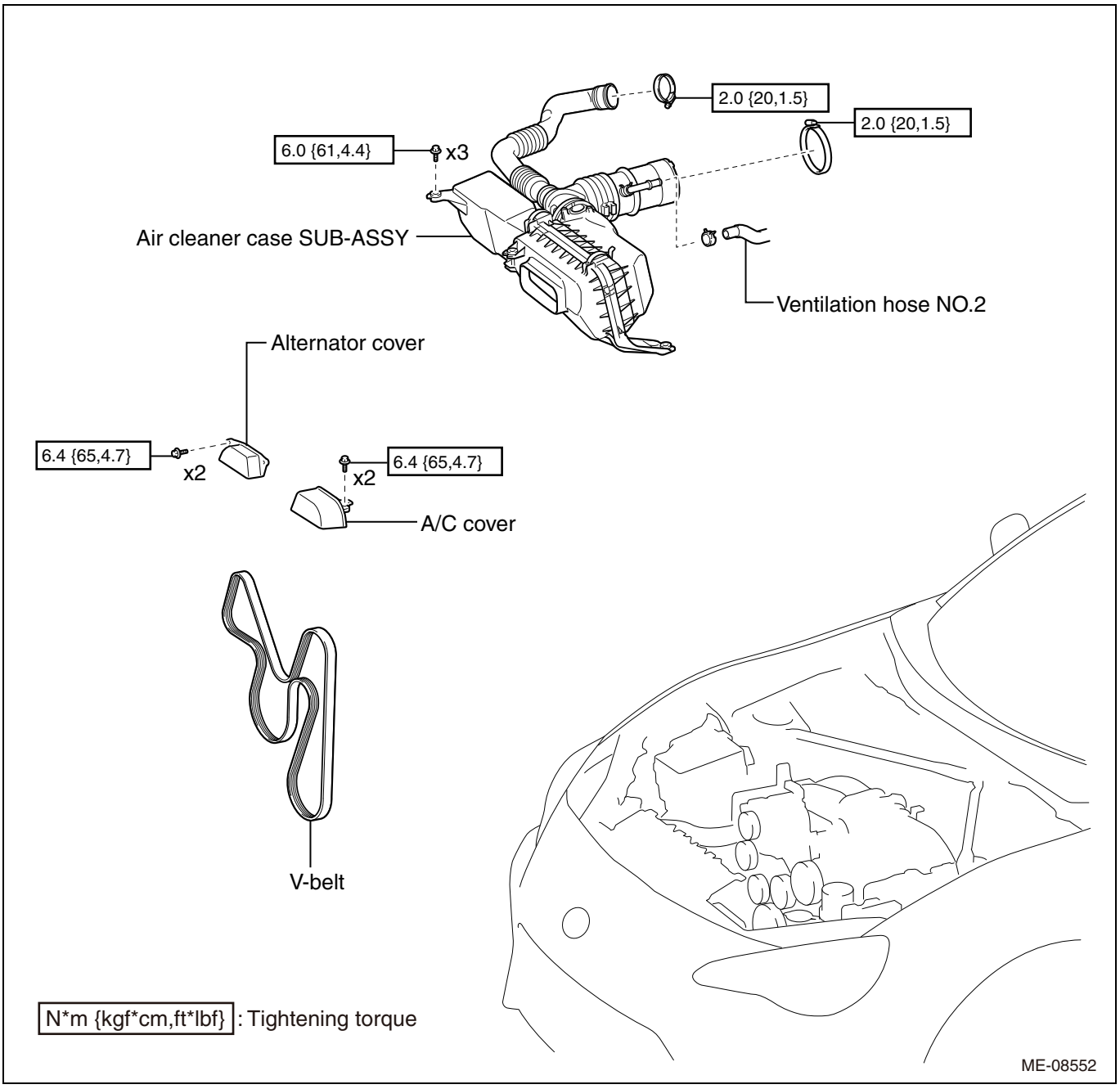

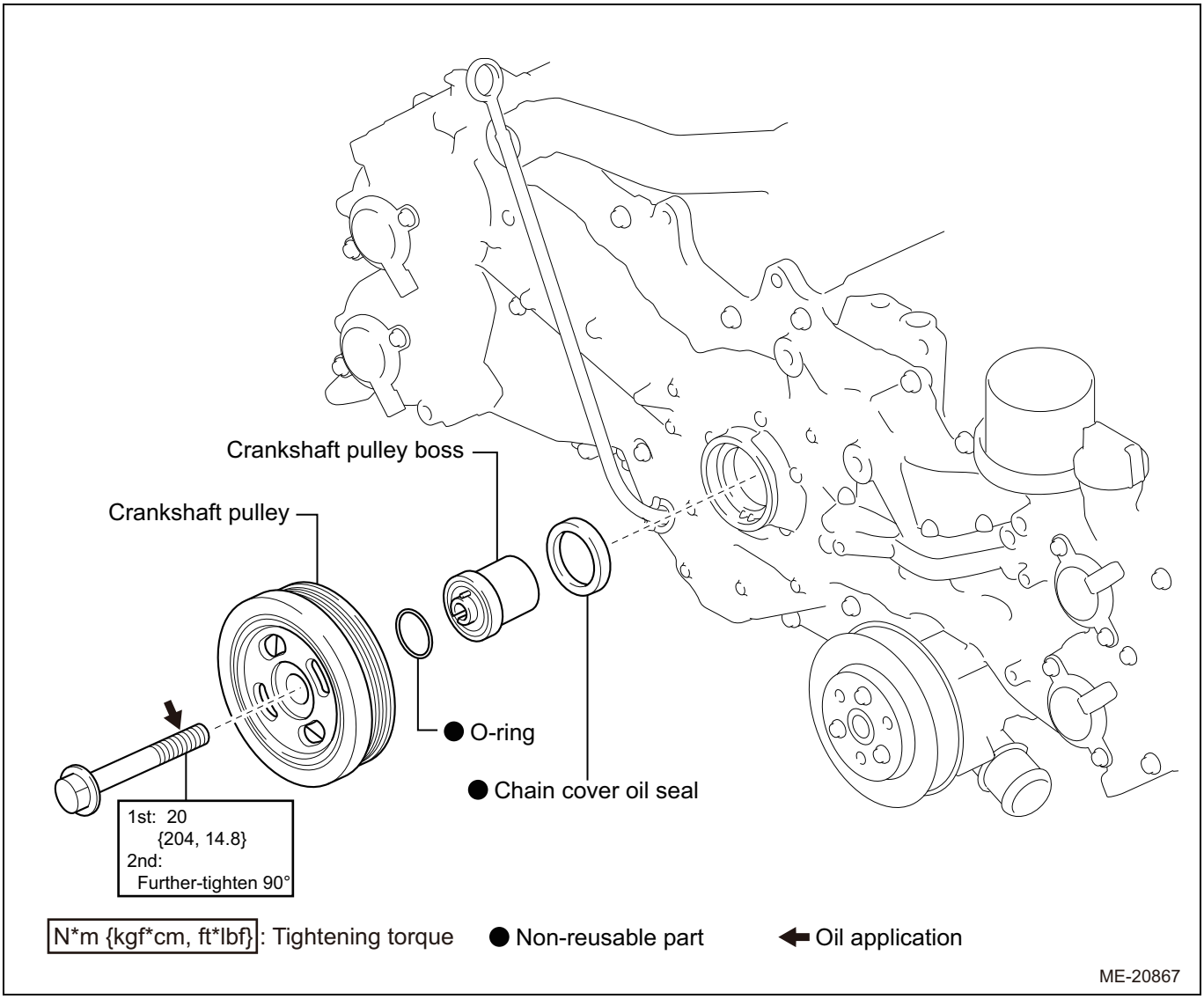

Removal

1. Removal of air cleaner case SUB-ASSY (Refer to EM - 5)
2. Removal of alternator cover (Refer to EM - 6)
3. Removal of A/C cover (Refer to EM - 7)
4. Removal of V-belt (Refer to EM - 7)

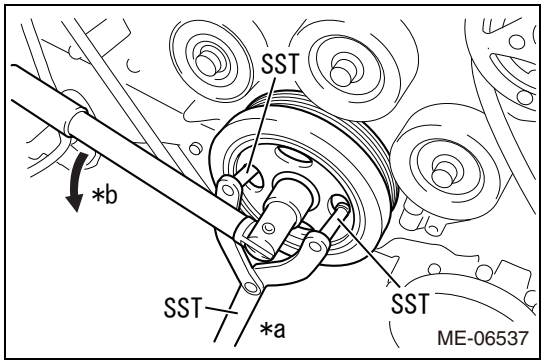

5. Crankshaft pulley removal
   (1) Use the SST to secure the crankshaft pulley.
   SST 18355AA000, 18334AA000

Captions in illustration

*a	Hold
*b	Drive

   (2) Remove the crankshaft pulley set bolt to remove the crankshaft pulley.

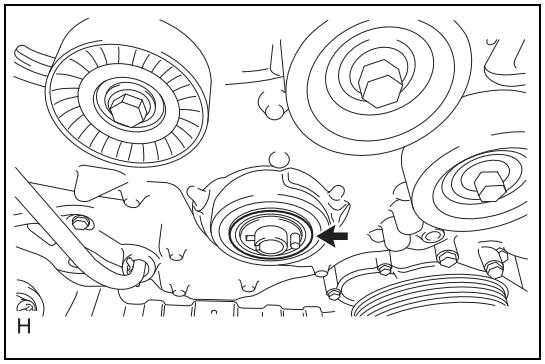

(3) Remove the O-ring from the crankshaft pulley boss.
(4) Remove the crankshaft pulley boss.

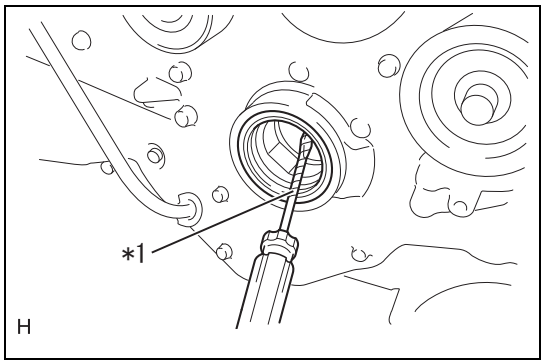

6. Chain cover oil seal removal
   (1) Using a flat tip screwdriver wrapped with protective tape, remove the chain cover oil seal.

Captions in illustration

*1	Protective tape

CAUTION:
Make sure that there are no scratches in the fitting area of crankshaft and chain cover oil seal.
NOTE:
If the crankshaft is scratched, repair it with sandpaper (# 400).

Installation

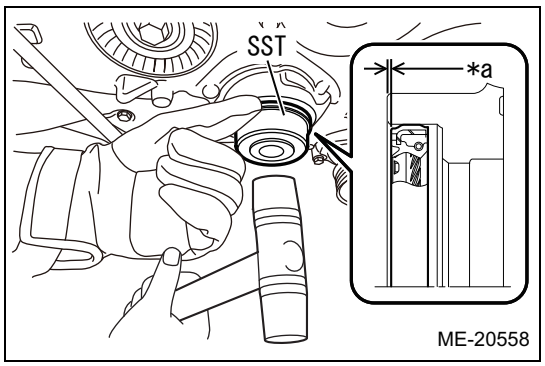

1. Chain cover installation
   (1) Degrease the press-fit portion of chain cover oil seal of the chain cover, and install a new chain cover oil seal to the chain cover using the SST.
   SST 41399FG020

Captions in illustration

*a	Chain cover oil seal press-fit position: 0 to 1.0 mm {0 to 0.039 in} from the end surface of chain cover

CAUTION:
To prevent engine oil leakage, do not apply engine oil or similar to the chain cover oil seal and the press-fit portion of chain cover oil seal of the chain cover.

2. Crankshaft pulley installation
   (1) Install the crankshaft pulley boss.
   (2) Install a new O-ring to the crankshaft pulley boss.

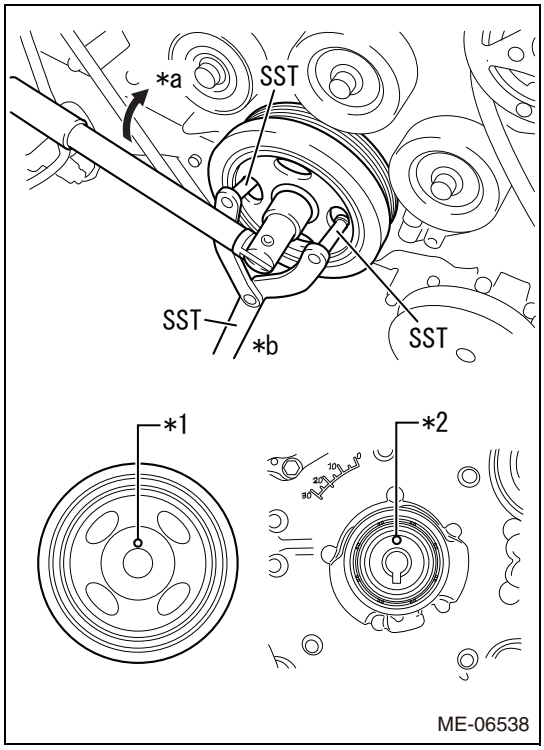

(3) Install the crankshaft pulley while aligning its knock hole to the knock pin of crankshaft pulley boss.

Captions in illustration

*1	Knock hole
*2	Knock pin
*a	Drive
*b	Hold

(4) Apply new engine oil to the thread and flange surface of crankshaft pulley set bolt.

(5) Use the SST to secure the crankshaft pulley and tighten the crankshaft pulley set bolt.
SST 18355AA000, 18334AA000
Standard value:T=20N·m {204kgf·cm} {14.8ft·lbf}

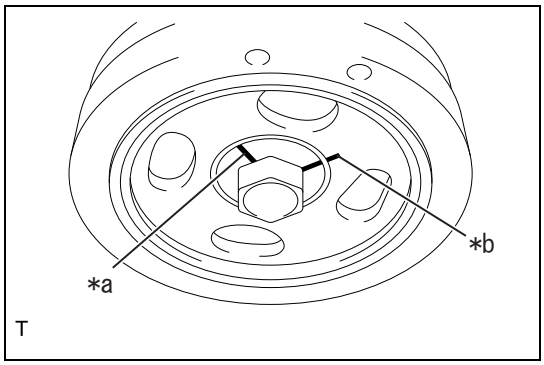

(6) Draw a reference line (A) on the crankshaft pulley set bolt and end line (B) on the crankshaft pulley according to the engraved lines on the bolt using a marker as shown in the figure.

Captions in illustration

*a	Reference line (A)
*b	End line (B)

NOTE:
There are engraved lines on the head of crankshaft pulley set bolt every 90°.

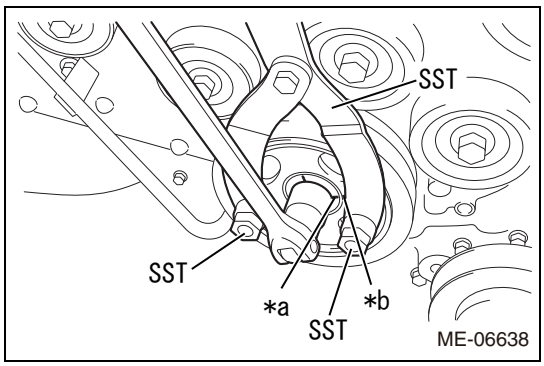

(7) Use the SST to secure the crankshaft pulley and retighten the crankshaft pulley bolt by 90° until the reference line (A) and end line (B) are aligned.
SST 18355AA000, 18334AA000

Captions in illustration

*a	Reference line (A)
*b	End line (B)

3. V-belt installation (Refer to EM - 7)
4. Installation of A/C cover (Refer to EM - 7)
5. Installation of alternator cover (Refer to EM - 8)
6. Installation of air cleaner case SUB-ASSY (Refer to EM - 8)

Engine rear oil seal (FA20)

Exploded view

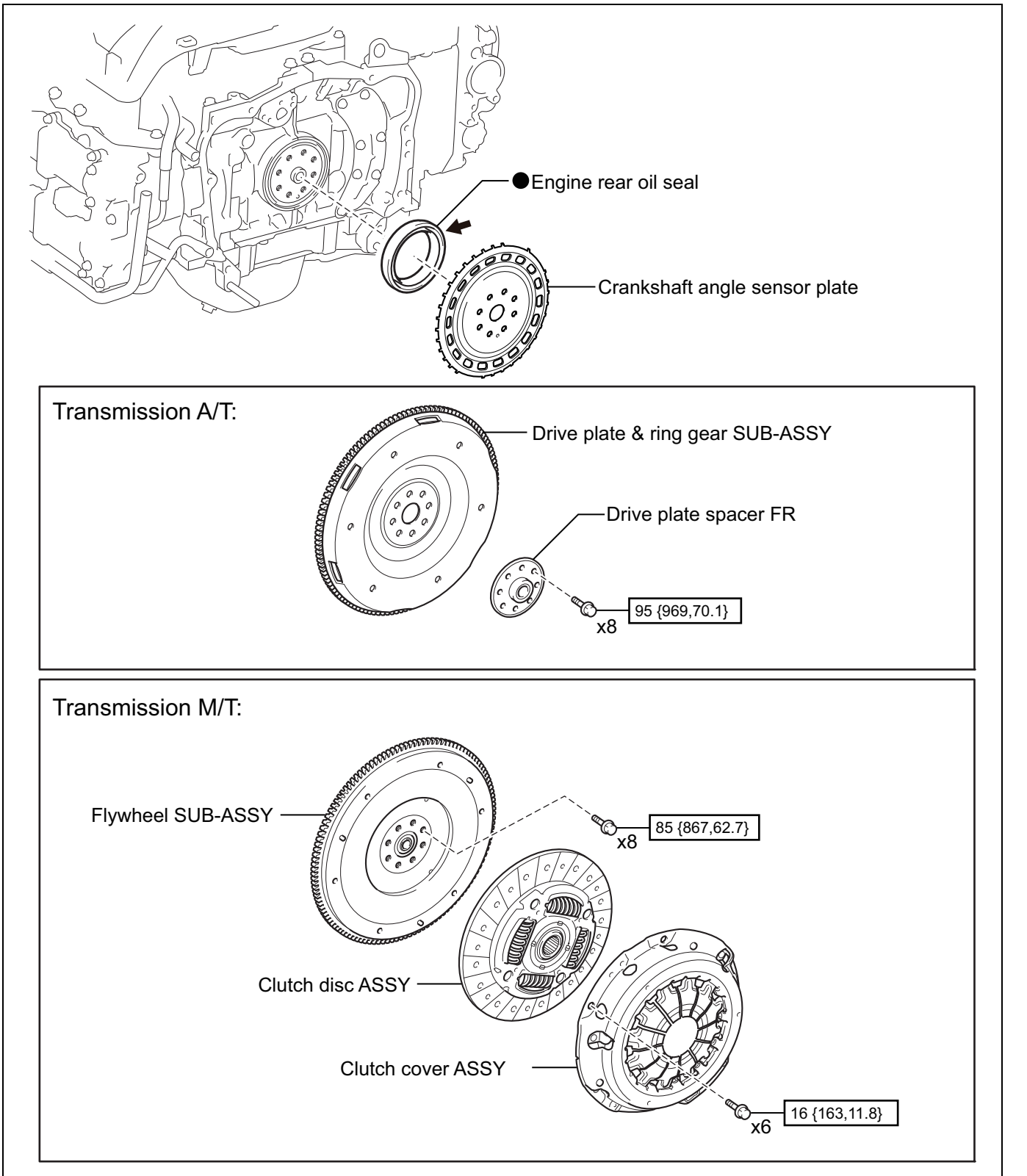

Removal

1. Removal of automatic transmission ASSY (transmission A/T) (Refer to AT - 220)
2. Removal of manual transmission ASSY (transmission M/T) (Refer to MT - 18)

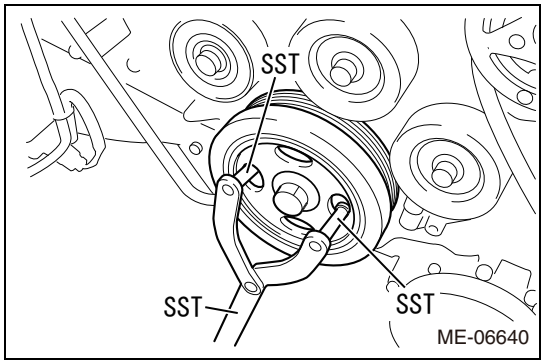

3. Drive plate & ring gear SUB-ASSY removal (transmission A/T)
   (1) Use the SST to secure the crankshaft pulley.
   SST 18355AA000, 18334AA000

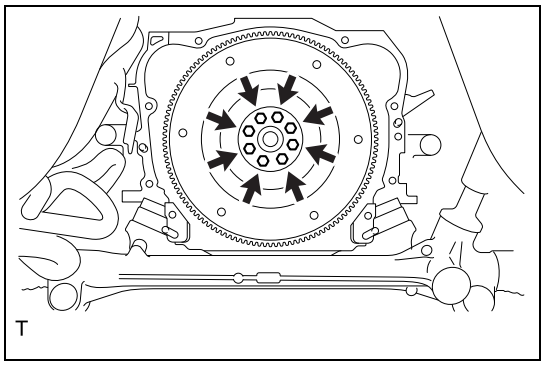

   (2) Remove the eight bolts to remove the drive plate spacer FR and drive plate & ring gear SUB-ASSY.

4. Clutch cover ASSY removal (transmission M/T) (Refer to CL - 24)
5. Clutch disc ASSY removal (transmission M/T) (Refer to CL - 24)

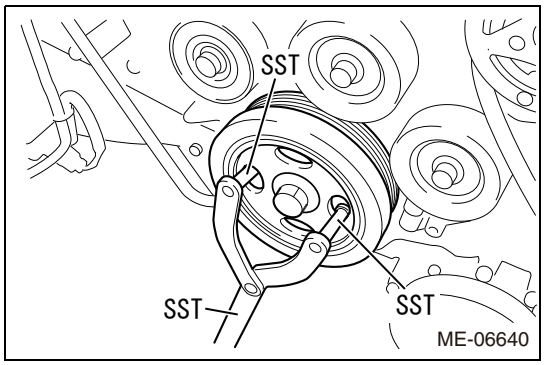

6. Flywheel SUB-ASSY removal (transmission M/T)
   (1) Use the SST to secure the crankshaft pulley.
   SST 18355AA000, 18334AA000

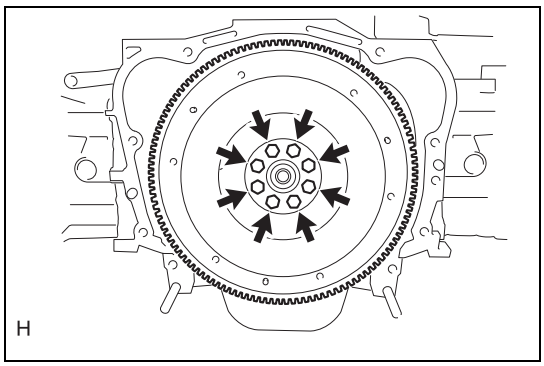

   (2) Remove the eight bolts and remove the flywheel SUB-ASSY.

7. Crank angle sensor plate removal
   (1) Remove the crank angle sensor plate.

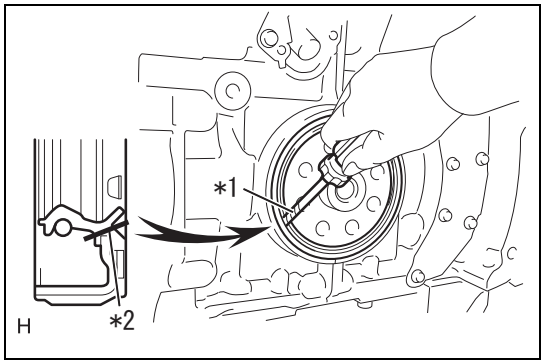

8. Engine rear oil seal removal
   (1) Make a slit to the oil seal lip using a cutter knife.

Captions in illustration

*1	Protective tape
*2	Cut line

   (2) Remove the oil seal using a flat tip screwdriver wrapped with protective tape.
   CAUTION:
   Make sure that there are no scratches in the fitting area of crankshaft and rear oil seal retainer.
   NOTE:
   If the crankshaft is scratched, repair it with sandpaper (# 400).

EM

Installation

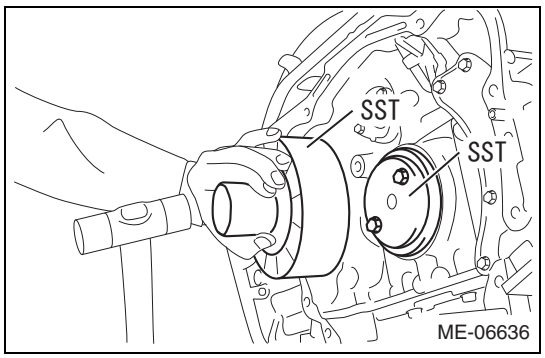

1. Engine rear oil seal installation
   (1) Apply a thin coat of new engine oil to the inner and outer peripheries of a new engine rear oil seal.
   (2) Use the SST to drive in the engine rear oil seal equally until it is aligned to the end surface of cylinder block.
   SST 18671AA020, 18657AA030
   CAUTION:
   - Do not drive in the engine rear oil seal at an angle.
   - Do not deform the engine rear oil seal.
   - Do not drive in the engine rear oil seal excessively.

   NOTE:
   The driving distance of engine rear oil seal may be in a range of 0 to 1.0 mm {0 to 0.039 in} from the end surface of cylinder block.

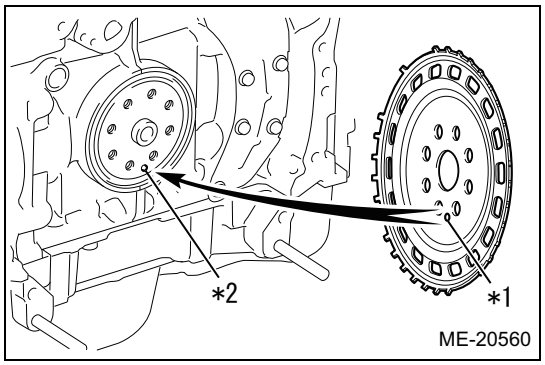

2. Crank angle sensor plate installation
   (1) Install the crank angle sensor plate by aligning the pin hole of the crankshaft and the pin of crank angle sensor plate.

Captions in illustration

*1	Pin hole
*2	Pin

3. Flywheel SUB-ASSY installation (transmission M/T)
   (1) Temporarily tighten the eight bolts to secure the flywheel SUB-ASSY.

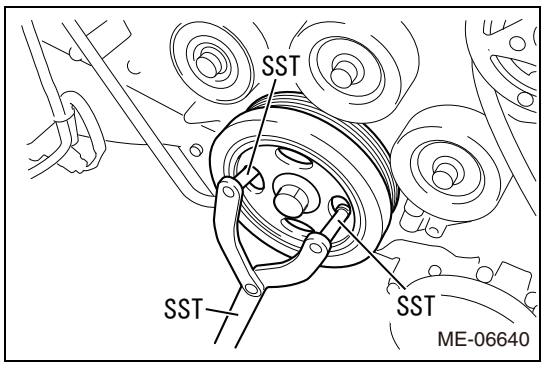

   (2) Use the SST to secure the crankshaft pulley.
   SST 18355AA000, 18334AA000

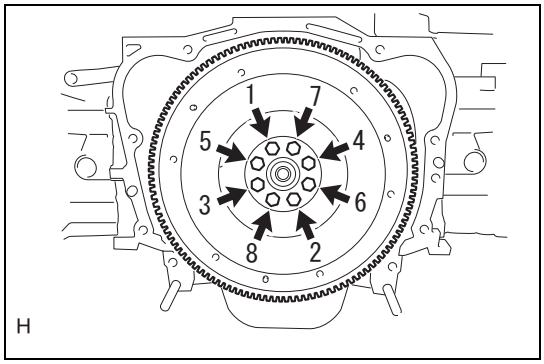

(3) Tighten the eight bolts in the order as shown in the figure.
Standard value:T=85N·m {867kgf·cm} {62.7ft·lbf}

4. Clutch disc ASSY installation (transmission M/T) (Refer to CL - 26)
5. Clutch cover ASSY installation (transmission M/T) (Refer to CL - 26)
6. Drive plate & ring gear SUB-ASSY installation (transmission A/T)
   (1) Temporarily tighten the eight bolts through the drive plate spacer FR to secure the drive plate & ring gear SUB-ASSY.

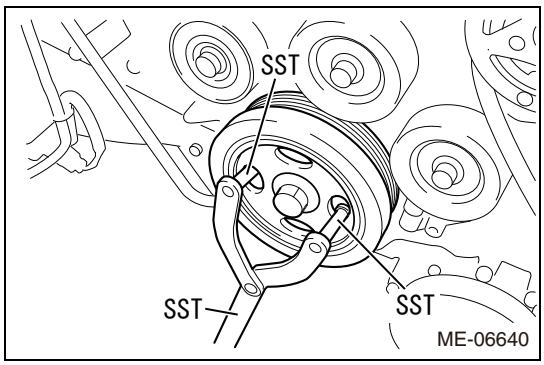

(2) Use the SST to secure the crankshaft pulley.
SST 18355AA000, 18334AA000

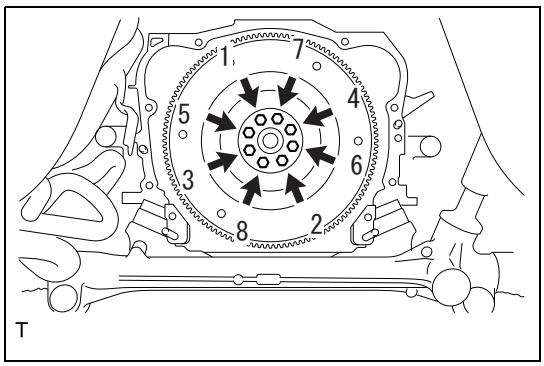

(3) Tighten the eight bolts in the order as shown in the figure.
Standard value:T=95N·m {969kgf·cm} {70.1ft·lbf}

7. Installation of manual transmission ASSY (transmission M/T) (Refer to MT - 18)
8. Installation of automatic transmission ASSY (transmission A/T) (Refer to AT - 227)
9. Engine oil leakage check

Partial engine ASSY (FA20)

Exploded view

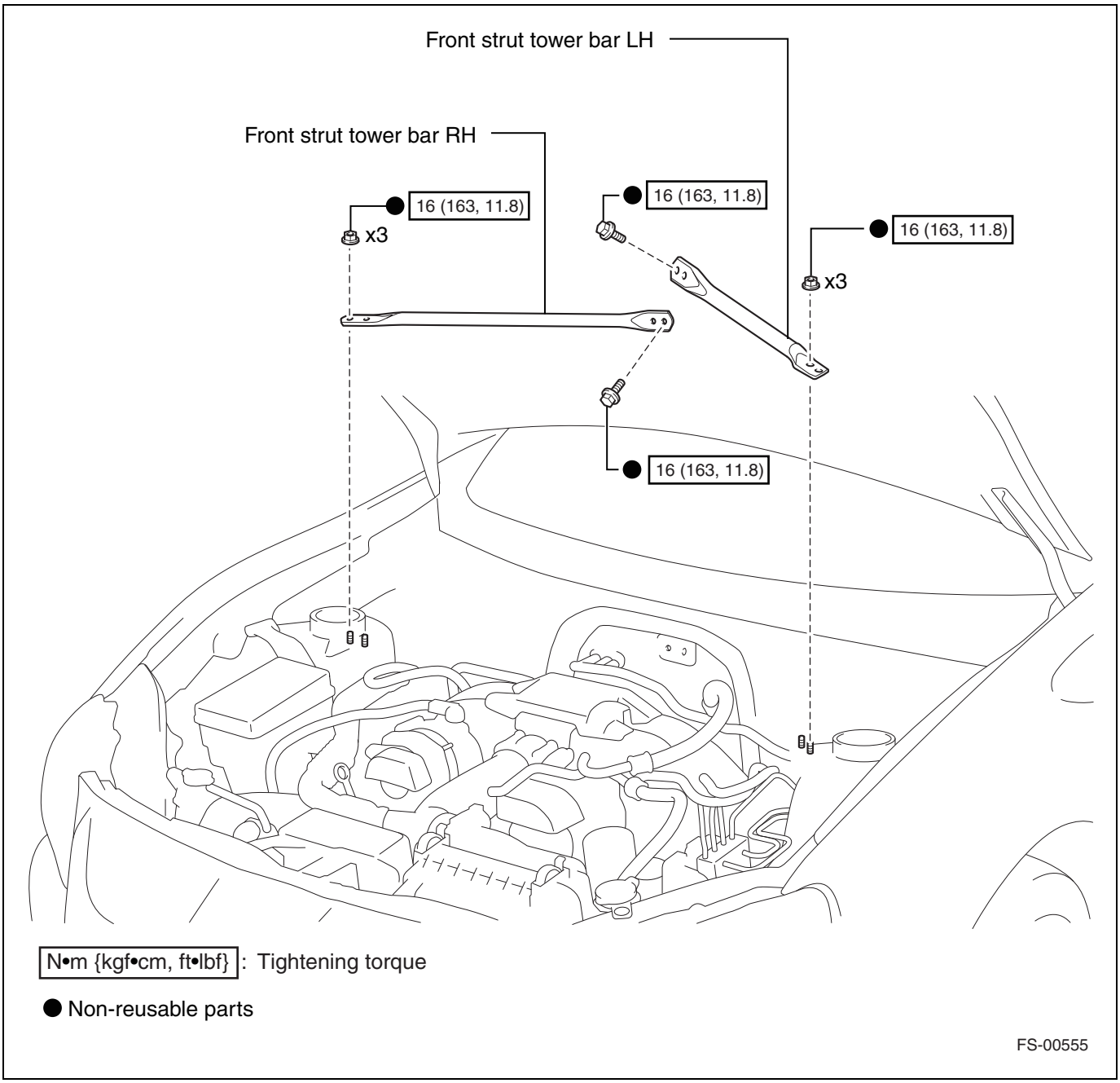

N•m {kgf•cm, ft•lbf} : Tightening torque

● Non-reusable parts

FS-00555

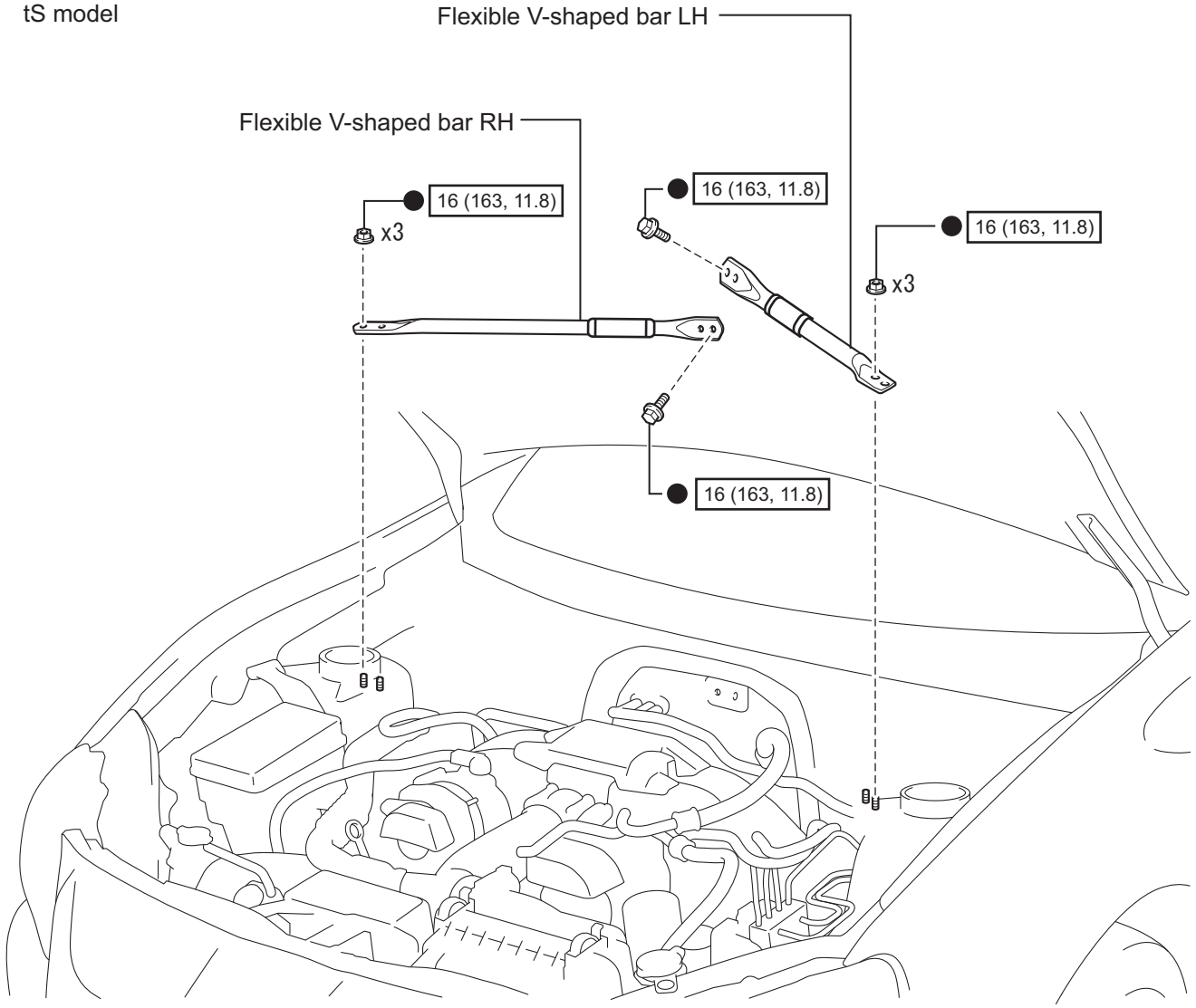

N*m {kgf*cm,ft*lbf} : Tightening torque

● Non-reusable parts

FS-10148

EM

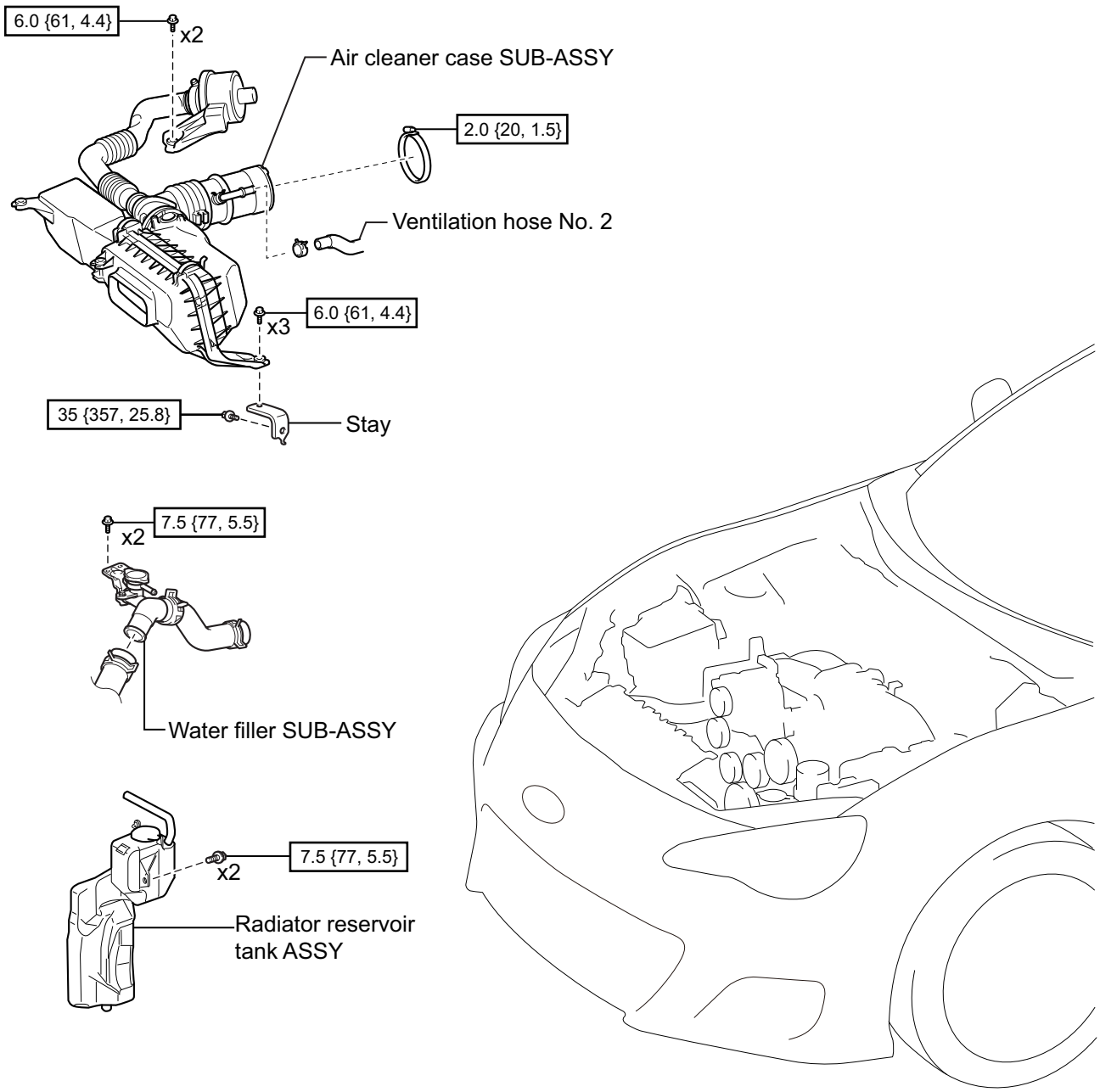

N*m {kgf*cm, ft*lbf}: Tightening torque

ME-20641

EM

For Automatic Transmission:

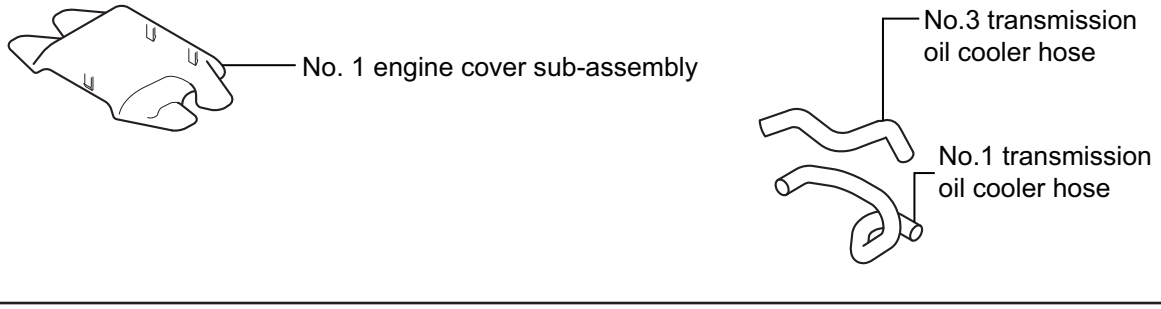

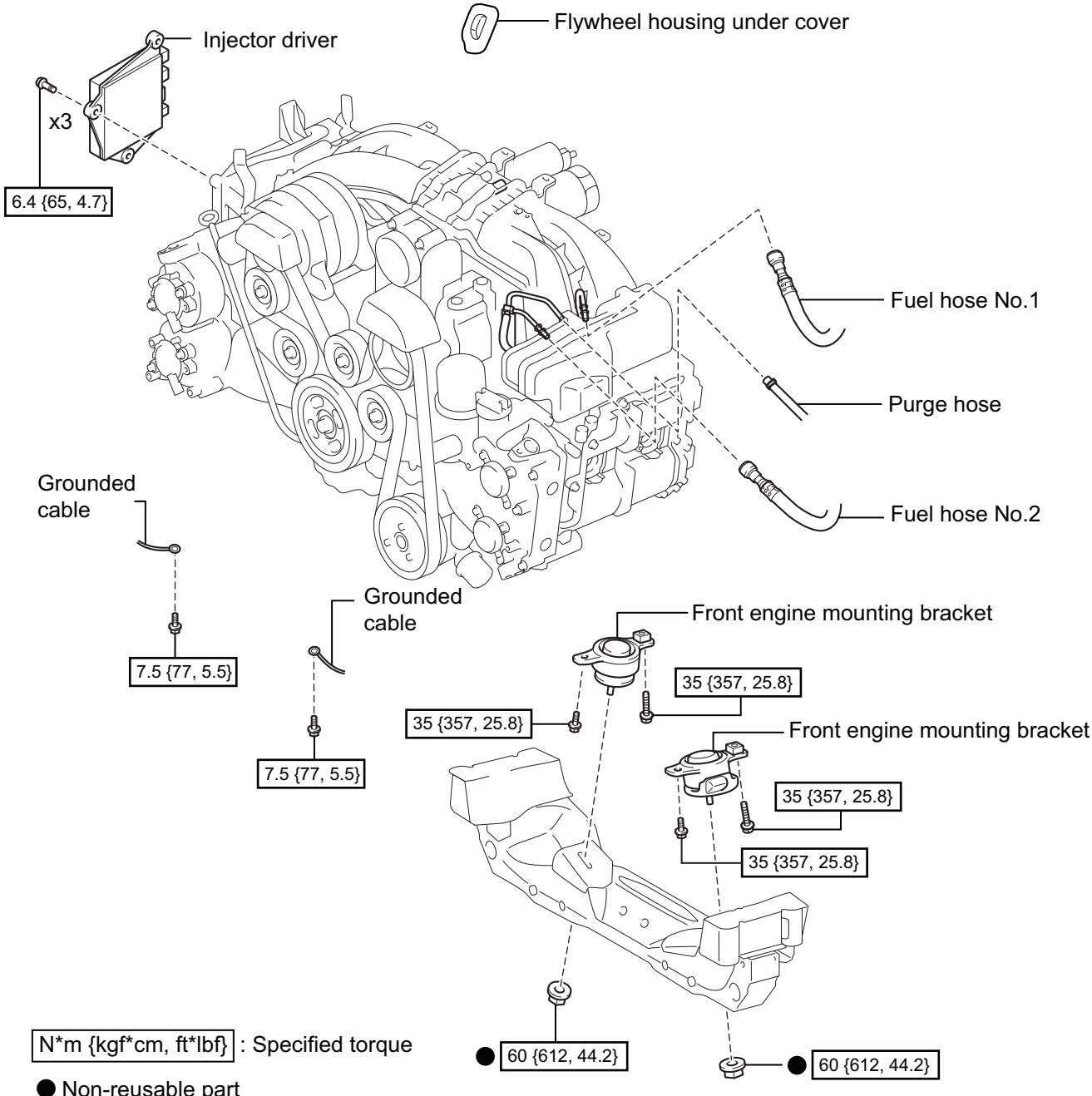

N*m {kgf*cm, ft*lbf} : Specified torque

● Non-reusable part

ME-20561

for Manual Transmission:

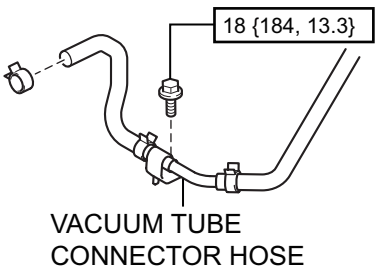

for Automatic Transmission:

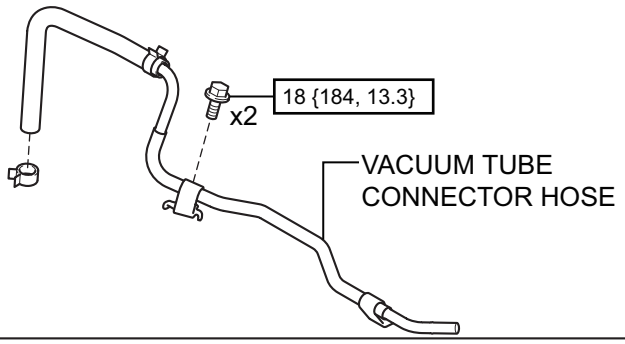

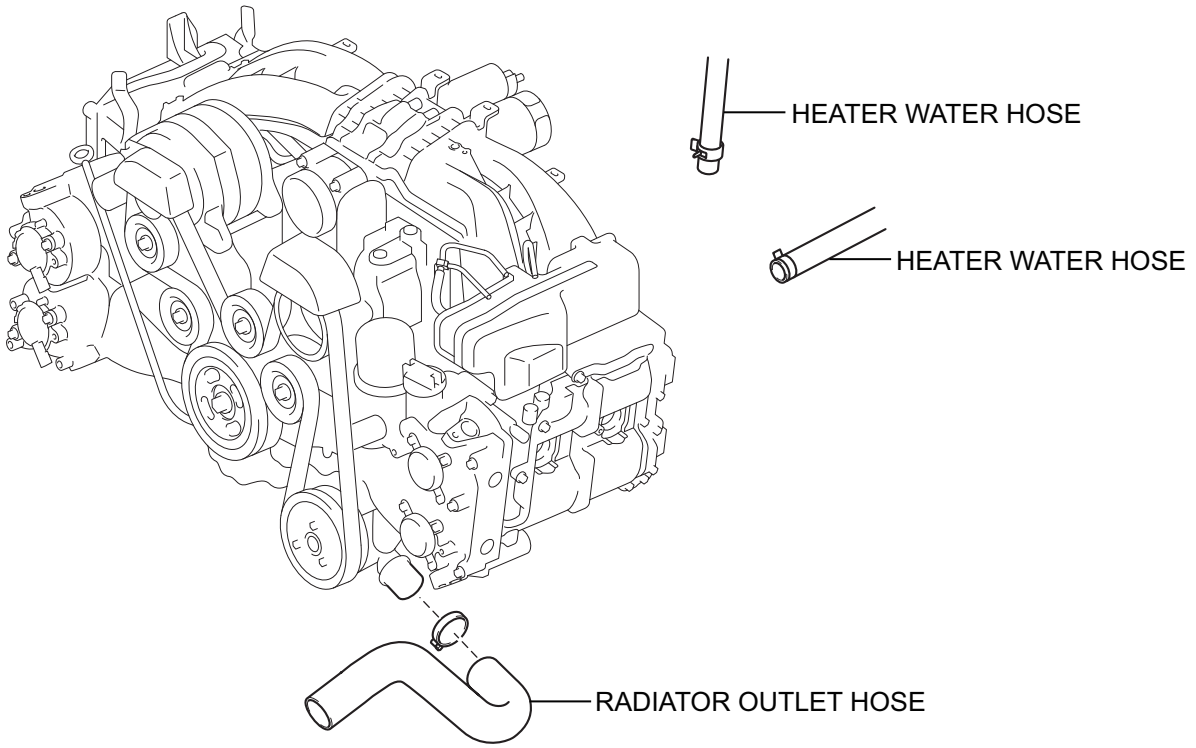

N*m {kgf*cm, ft*lbf} : Specified torque

ME-06949

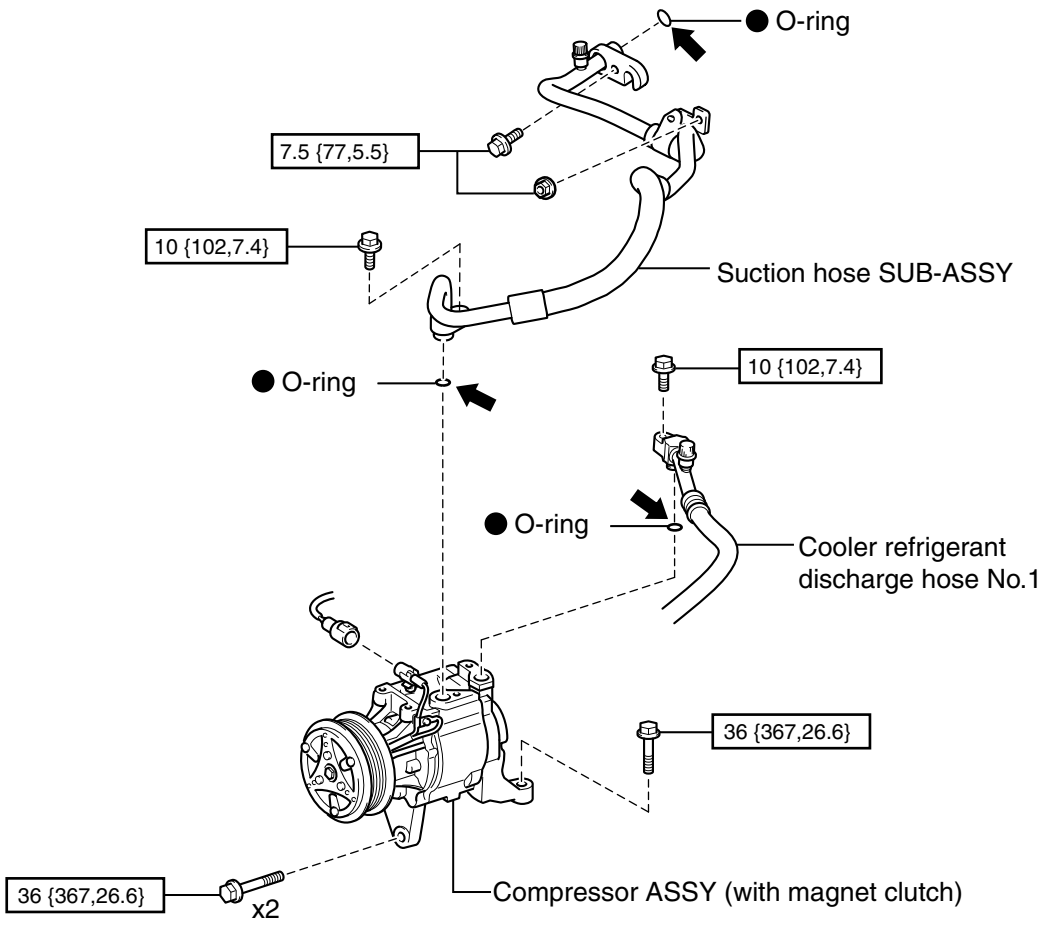

N•m {kgf•cm, ft•lbf} : Tightening torque

● Non-reusable parts ⬅ Compressor oil ND-OIL8

ME-06948

EM

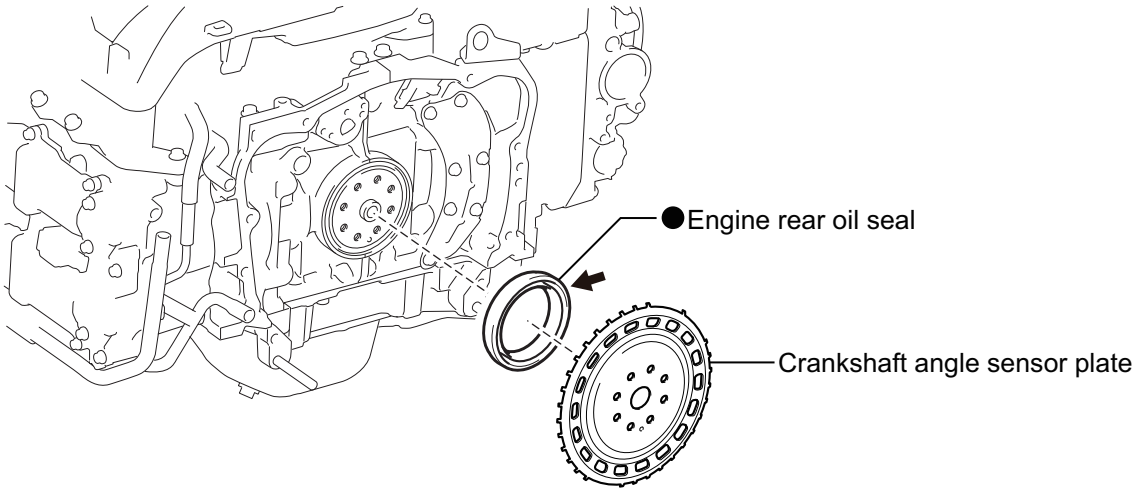

Transmission A/T:

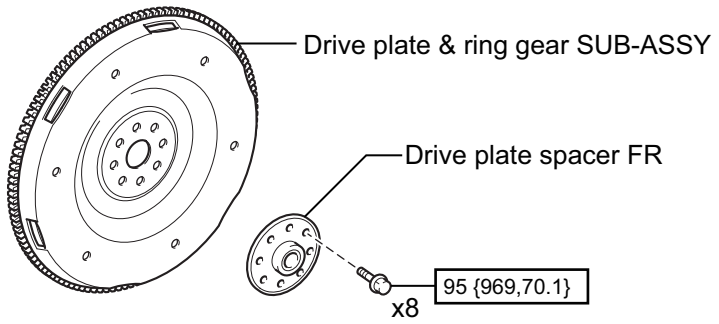

Transmission M/T:

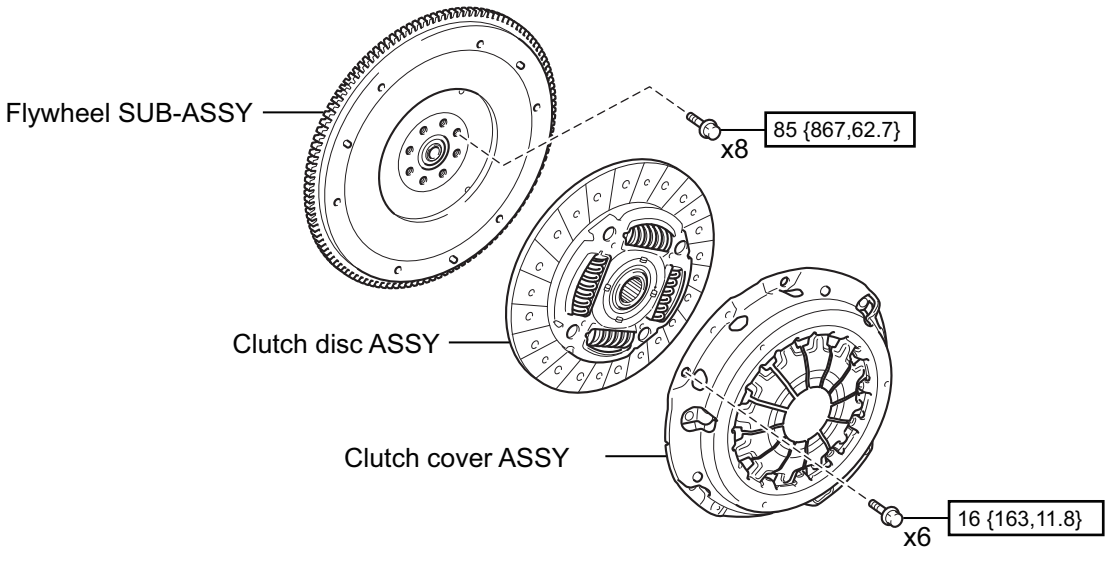

N*m {kgf*cm,ft*lbf} : Tightening torque ● Non-reusable parts ← Oil application

ME-21386

Transmission A/T:

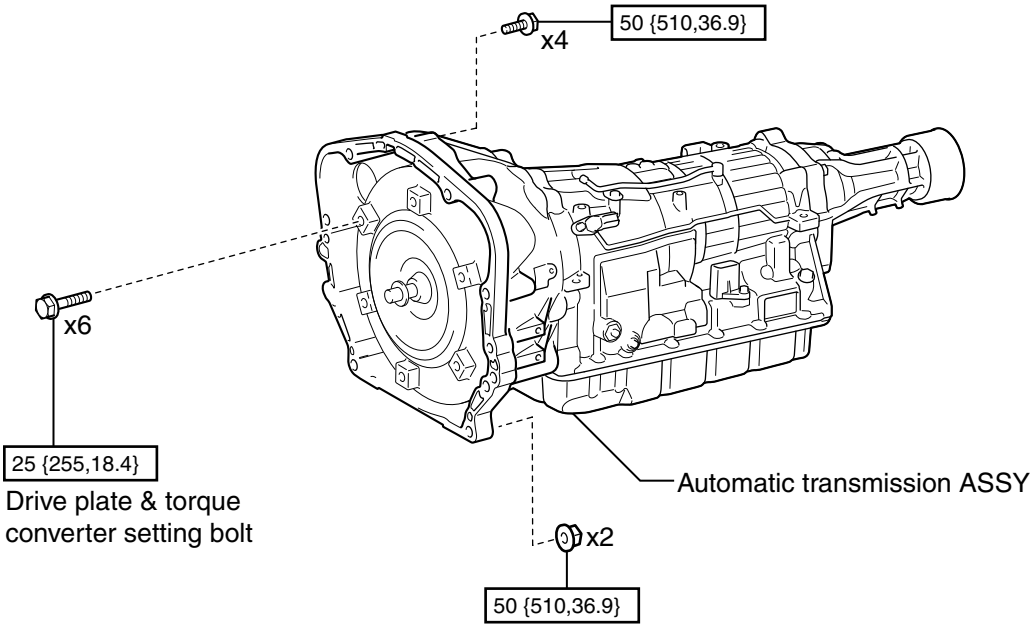

Transmission M/T:

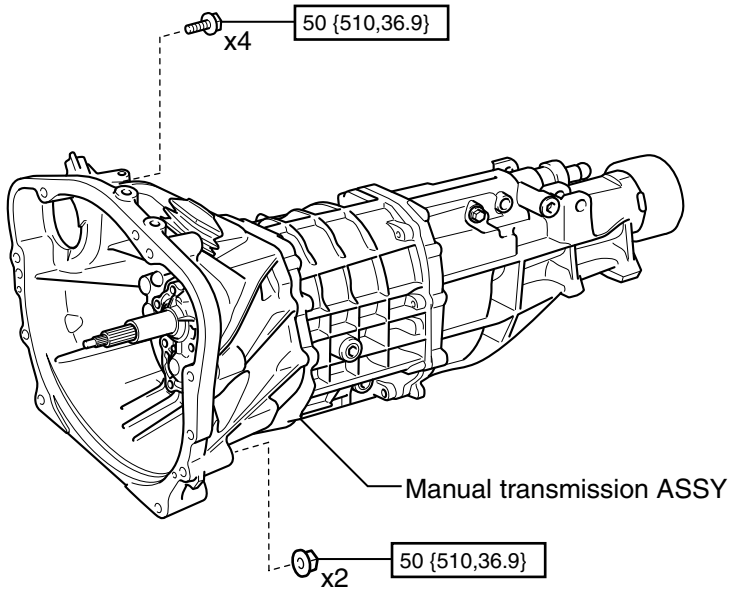

N•m {kgf•cm, ft•lbf} : Tightening torque

ME-06951

EM

EM

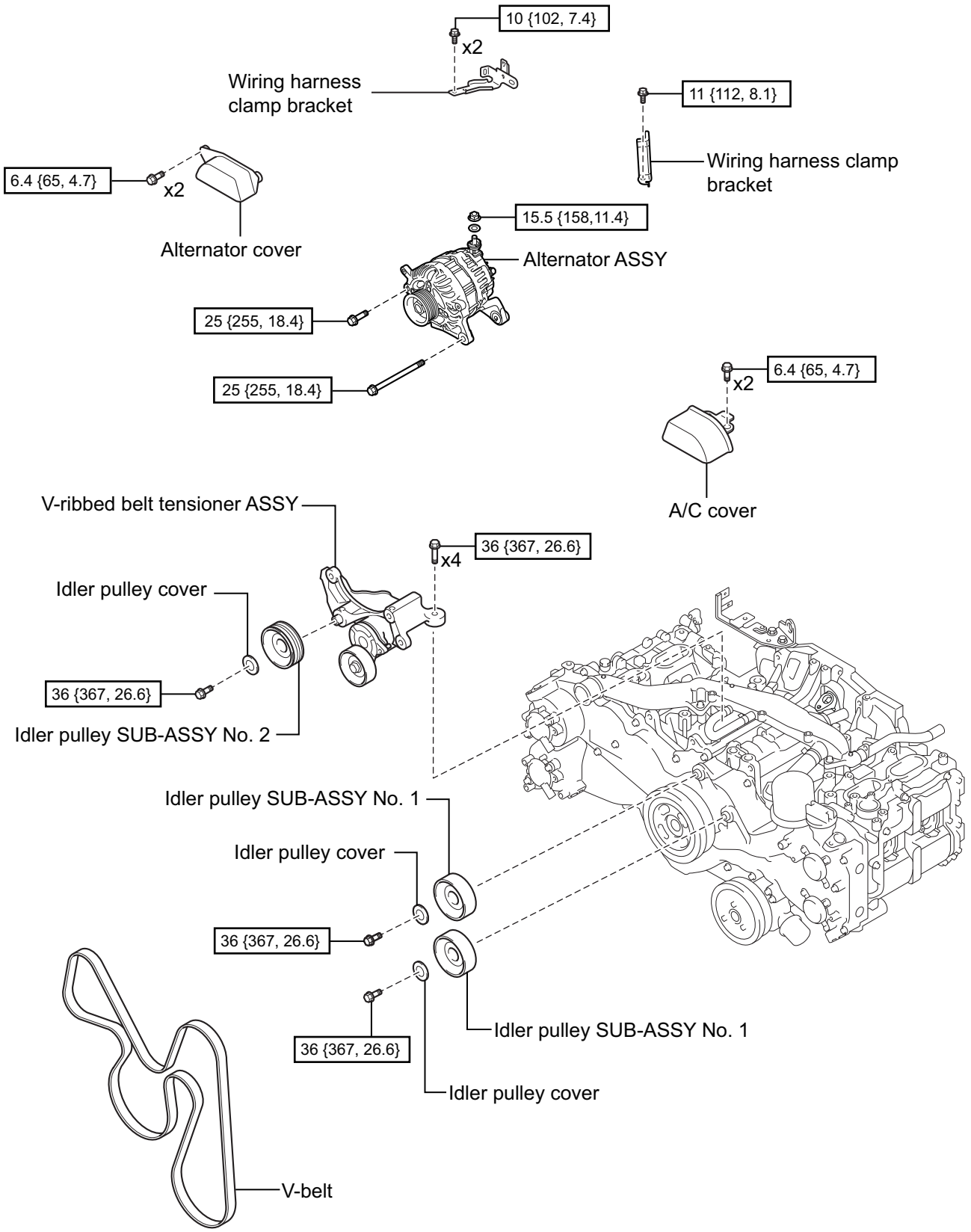

N*m {kgf*cm, ft*lbf}: Tightening torque

ME-20562

Transmission A/T:

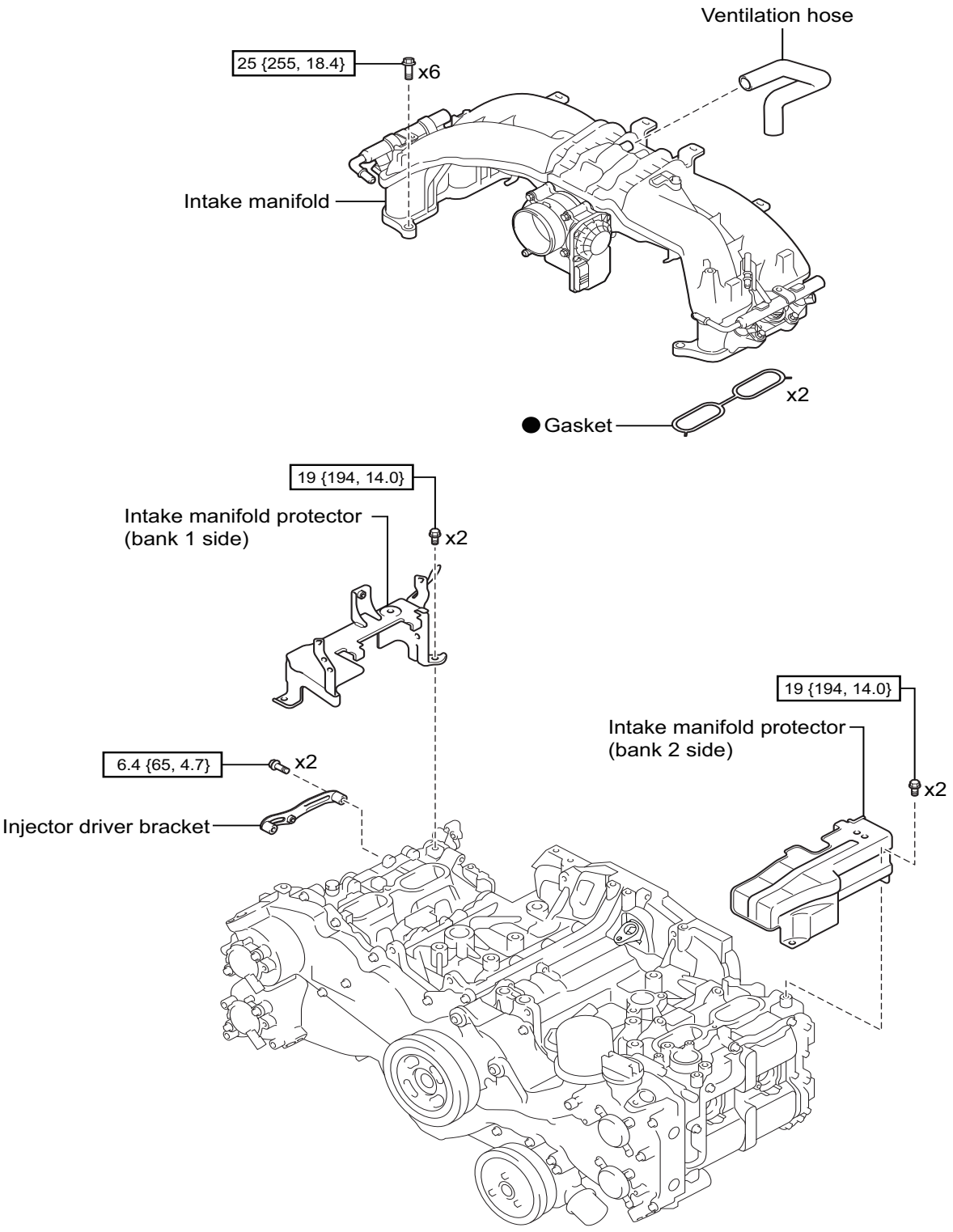

N*m {kgf*cm, ft*lbf}: Tightening torque ● Non-reusable part

ME-20576

EM

EM

Transmission M/T:

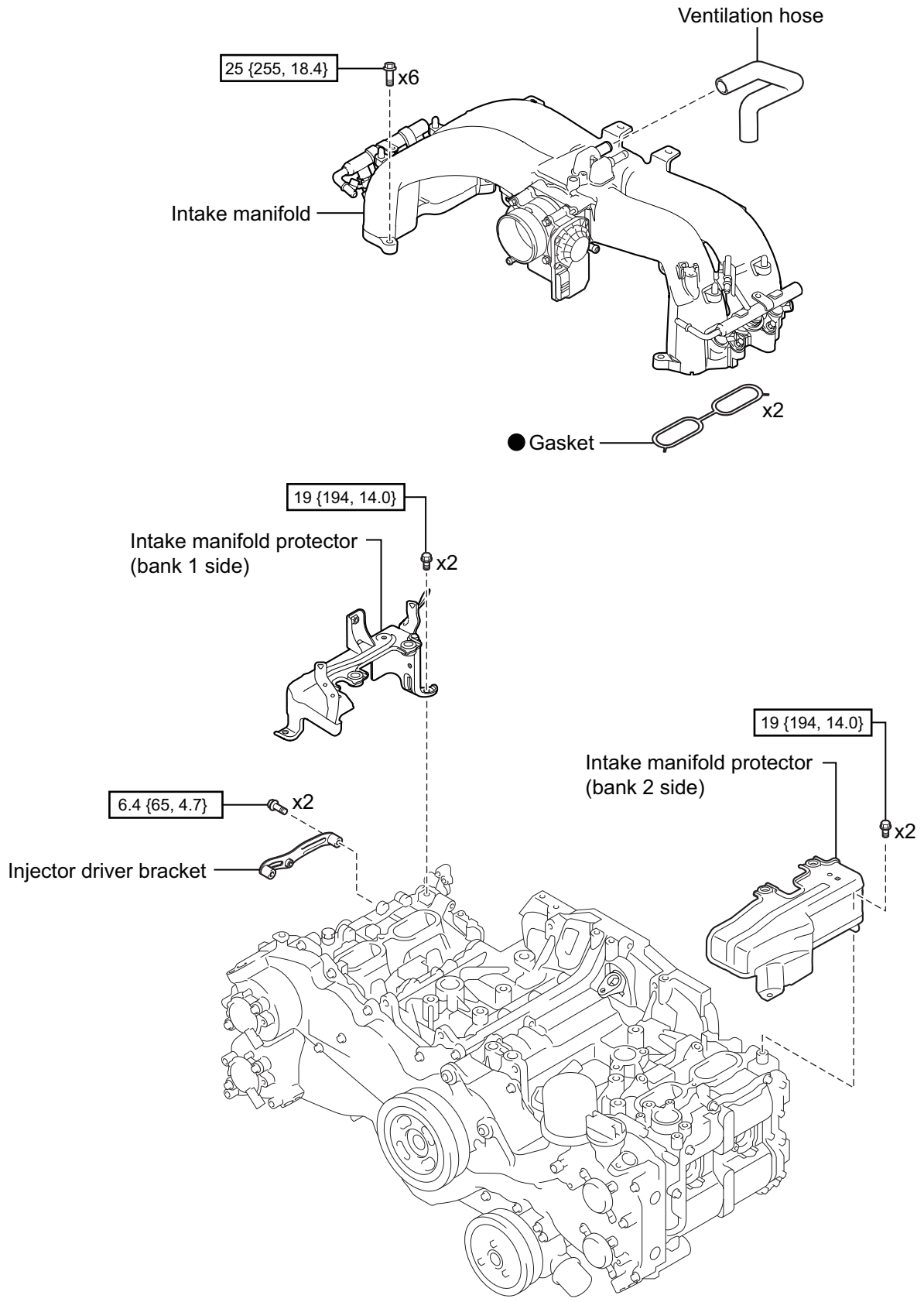

N*m {kgf*cm, ft*lbf}: Tightening torque ● Non-reusable part

ME-20563

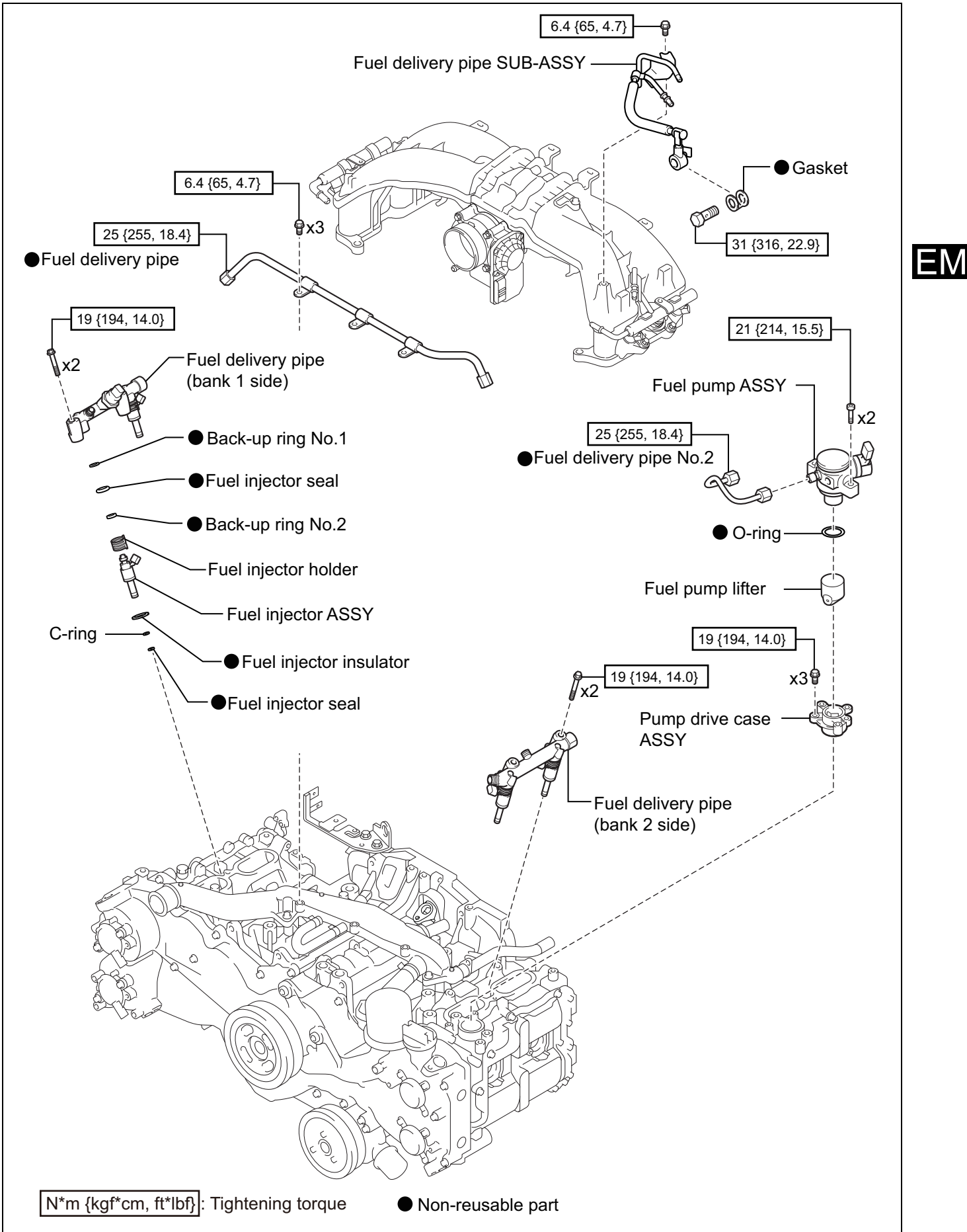
6.4 {65, 4.7}
Fuel delivery pipe SUB-ASSY
Gasket
6.4 {65, 4.7}
x3
25 {255, 18.4}
Fuel delivery pipe
31 {316, 22.9}
19 {194, 14.0}
x2
Fuel delivery pipe (bank 1 side)
21 {214, 15.5}
Fuel pump ASSY
x2
Back-up ring No.1
25 {255, 18.4}
Fuel delivery pipe No.2
Fuel injector seal
Back-up ring No.2
O-ring
Fuel injector holder
Fuel pump lifter
Fuel injector ASSY
C-ring
19 {194, 14.0}
Fuel injector insulator
19 {194, 14.0}
x3
x2
Fuel injector seal
Pump drive case ASSY
Fuel delivery pipe (bank 2 side)
N*m {kgf*cm, ft*lbf}: Tightening torque
Non-reusable part
ME-20564

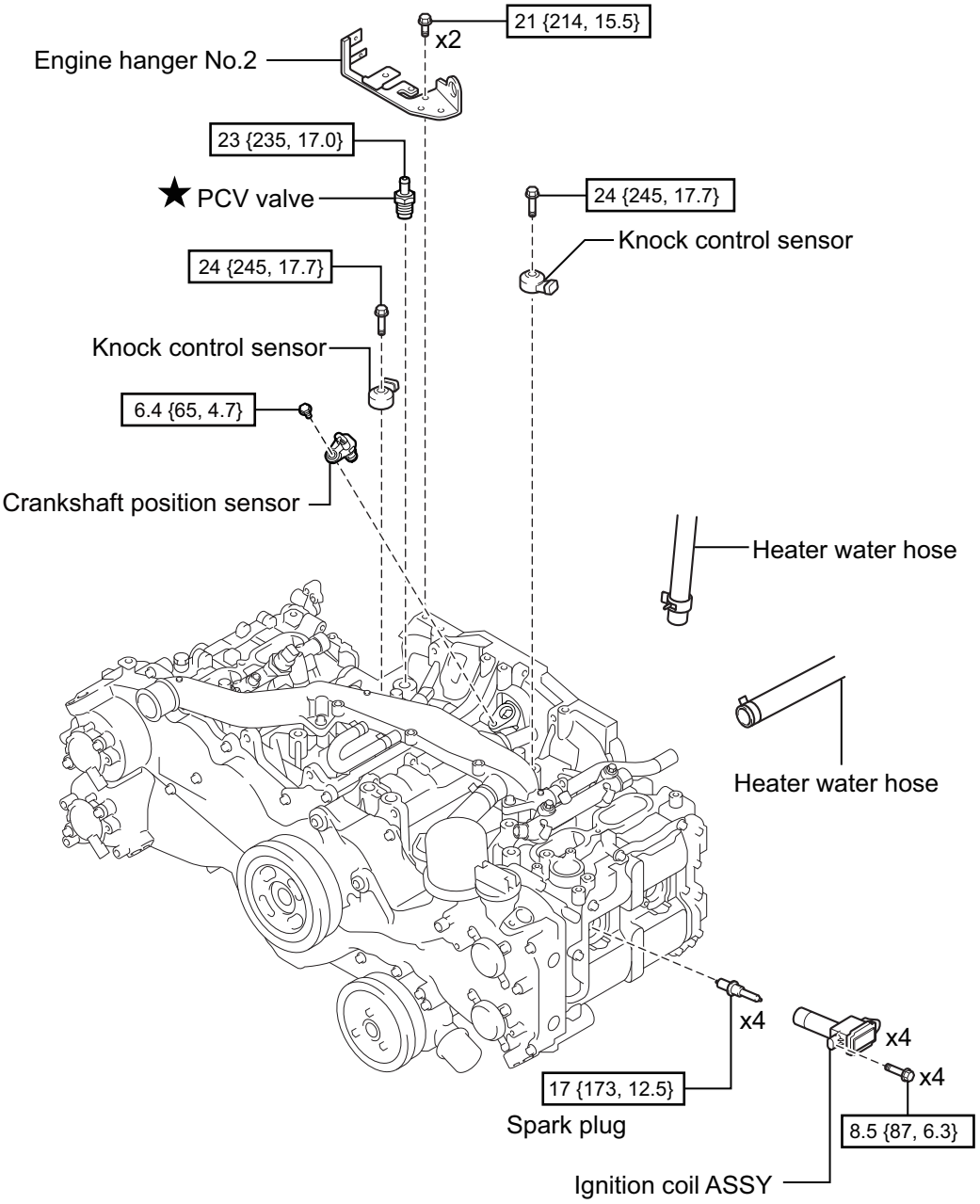

Transmission M/T:

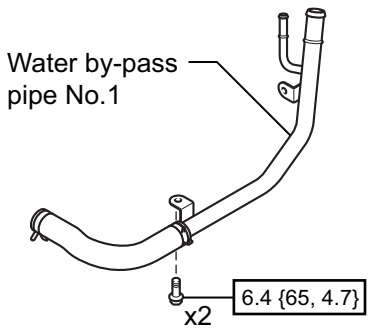

Transmission A/T:

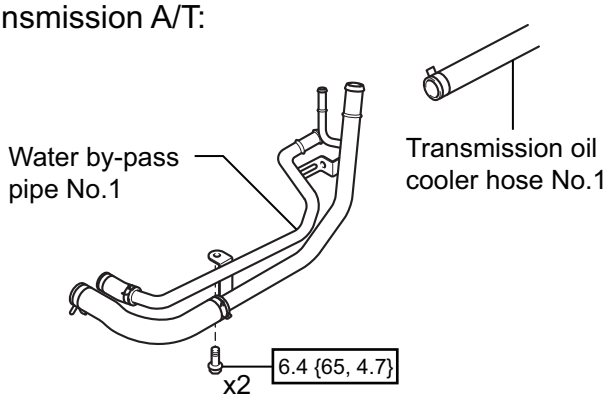

N*m {kgf*cm, ft*lbf}: Tightening torque ★ Arrest parts

ME-20574

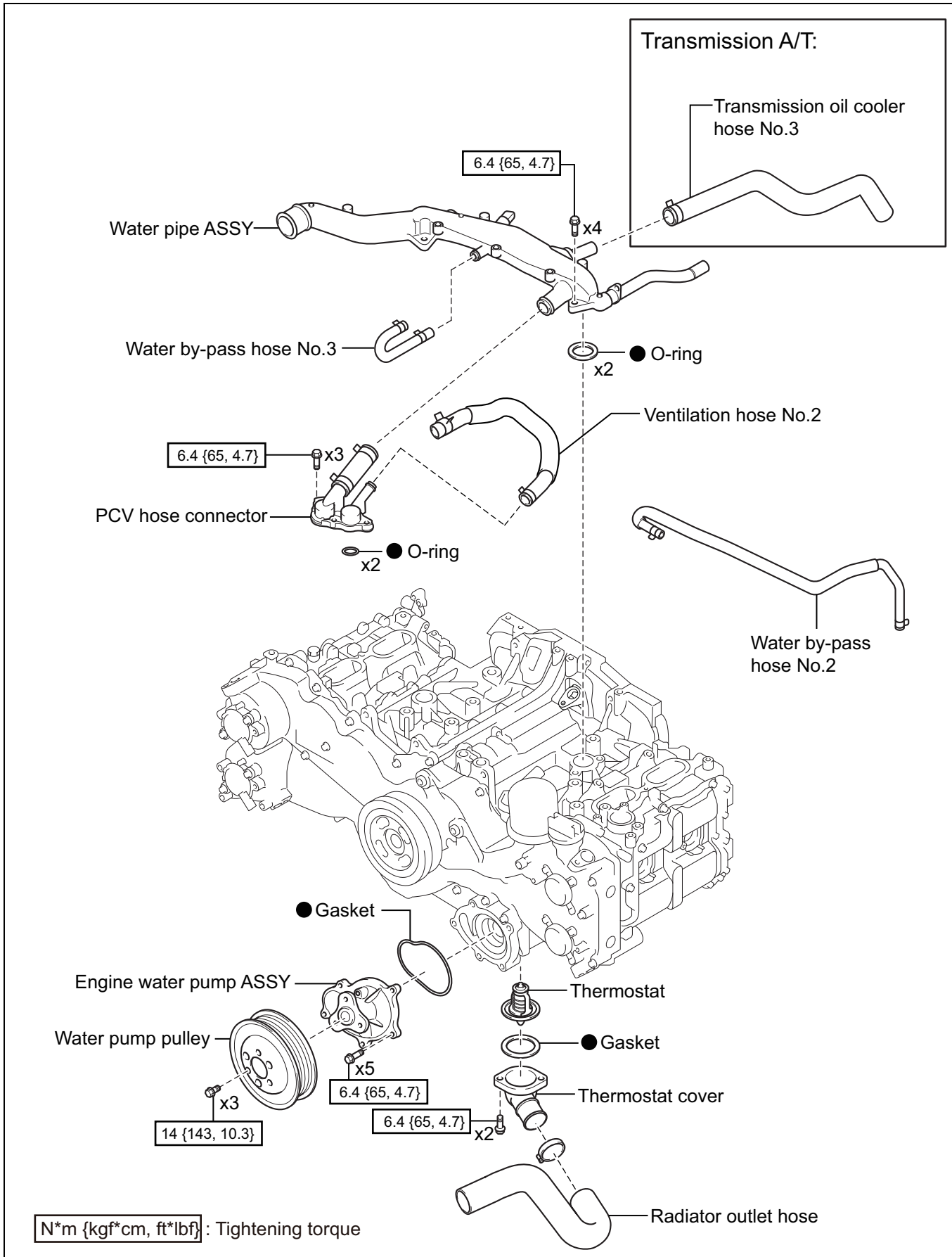
Transmission A/T:
Transmission oil cooler hose No.3
6.4 {65, 4.7}
x4
Water pipe ASSY
Water by-pass hose No.3
● O-ring
x2
Ventilation hose No.2
6.4 {65, 4.7}
x3
PCV hose connector
● O-ring
x2
Water by-pass hose No.2
● Gasket
Engine water pump ASSY
Thermostat
Water pump pulley
● Gasket
x5
6.4 {65, 4.7}
x3
14 {143, 10.3}
Thermostat cover
6.4 {65, 4.7}
x2
Radiator outlet hose
N*m {kgf*cm, ft*lbf}: Tightening torque
● Non-reusable part
ME-20635

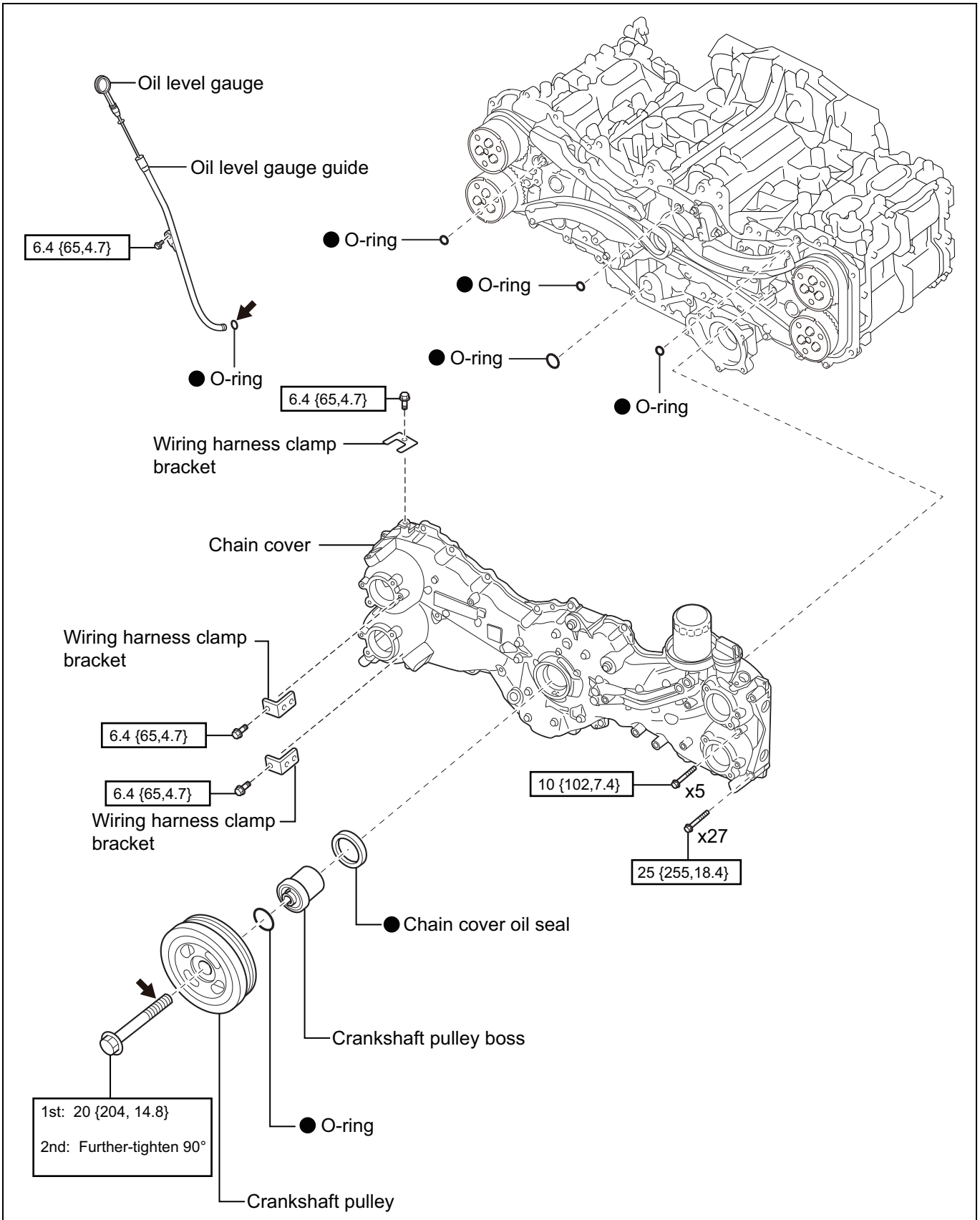

N*m {kgf*cm, ft*lbf}: Tightening torque ● Non-reusable part ← Oil application

ME-20866

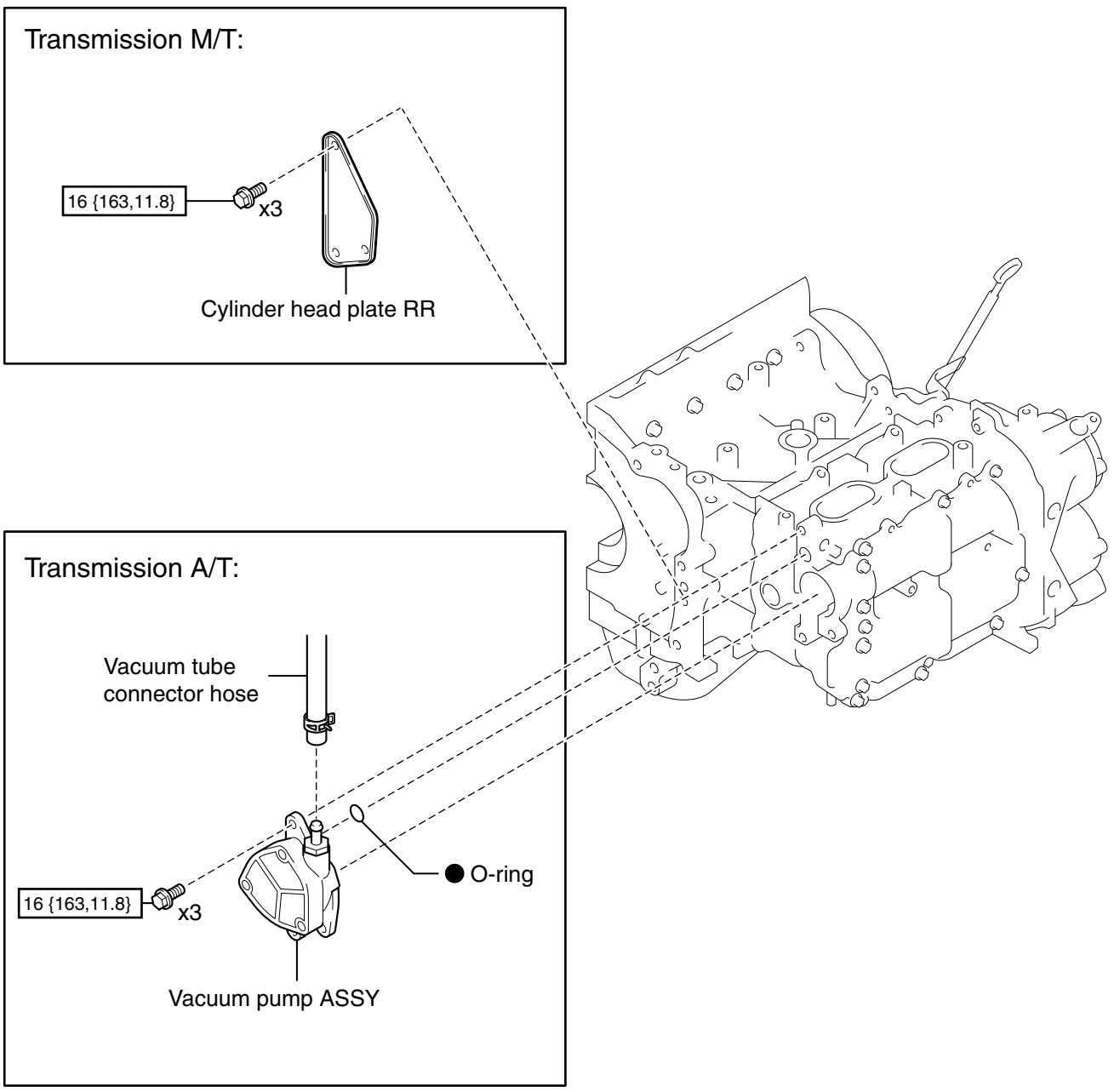

N•m {kgf•cm, ft•lbf} : Tightening torque ● Non-reusable parts

ME-06957

EM

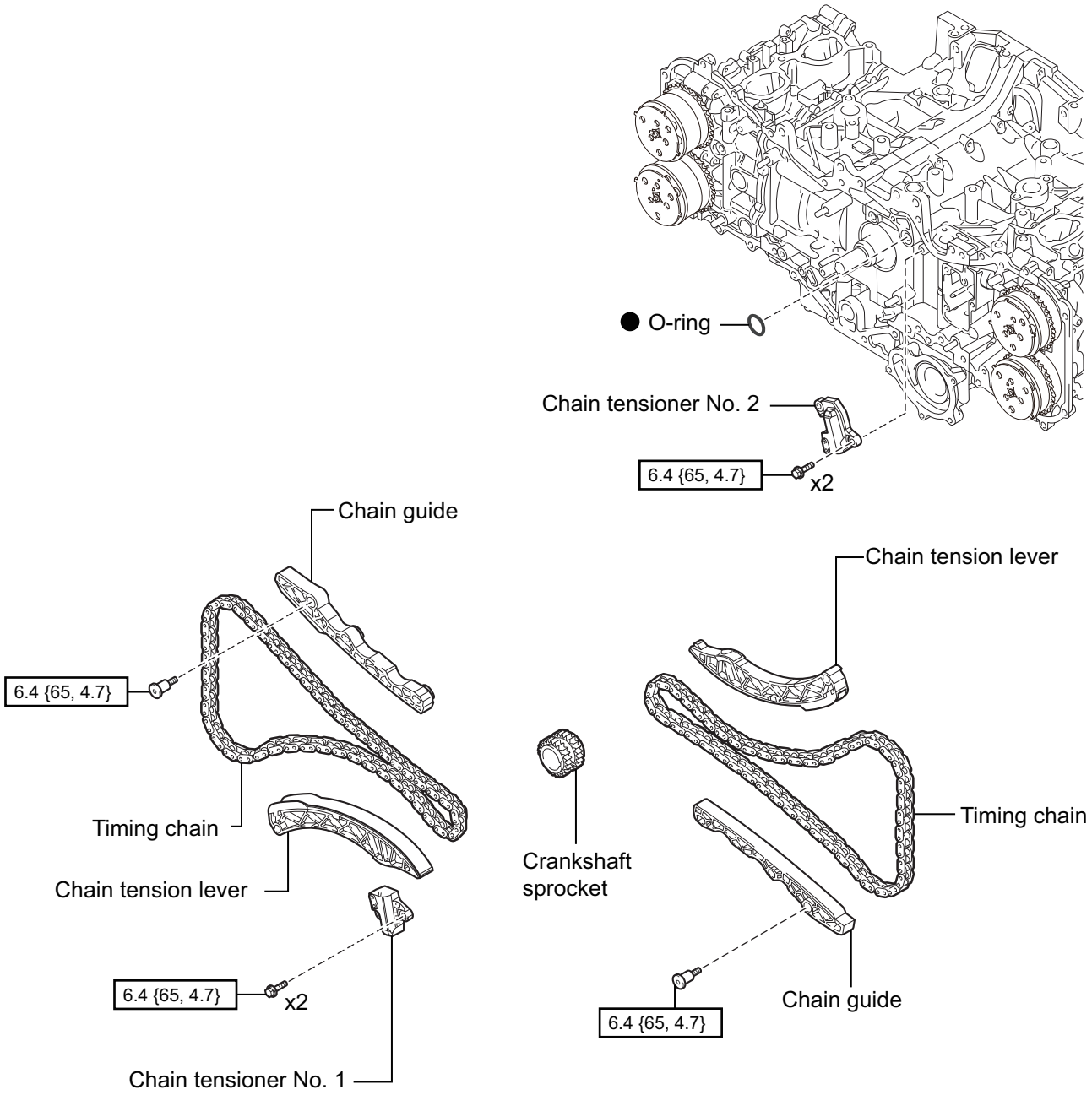

N*m {kgf*cm, ft*lbf}: Tightening torque

● Non-reusable part

ME-20526

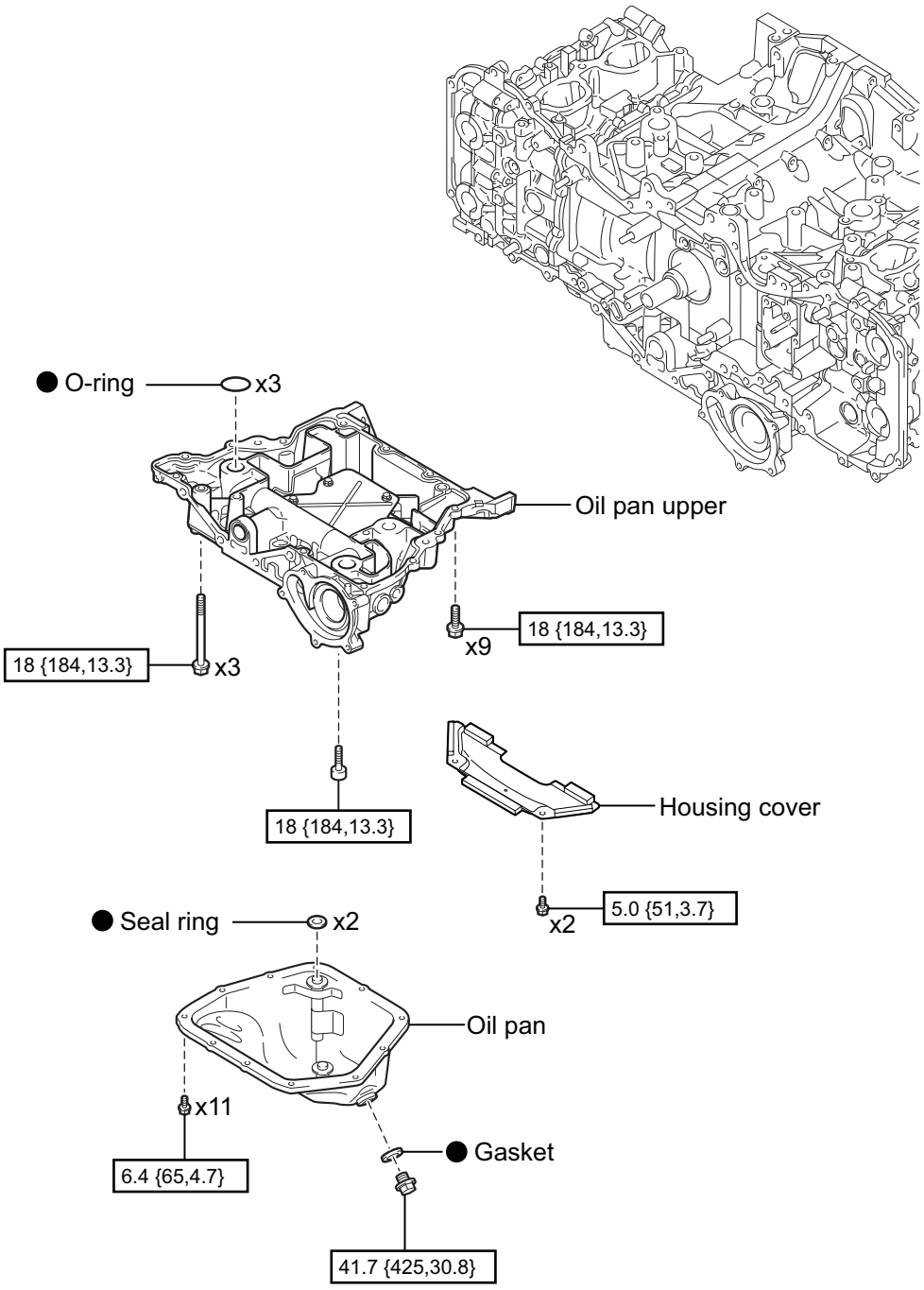

N*m {kgf*cm,ft*lbf} : Tightening torque ● Non-reusable parts

ME-21388

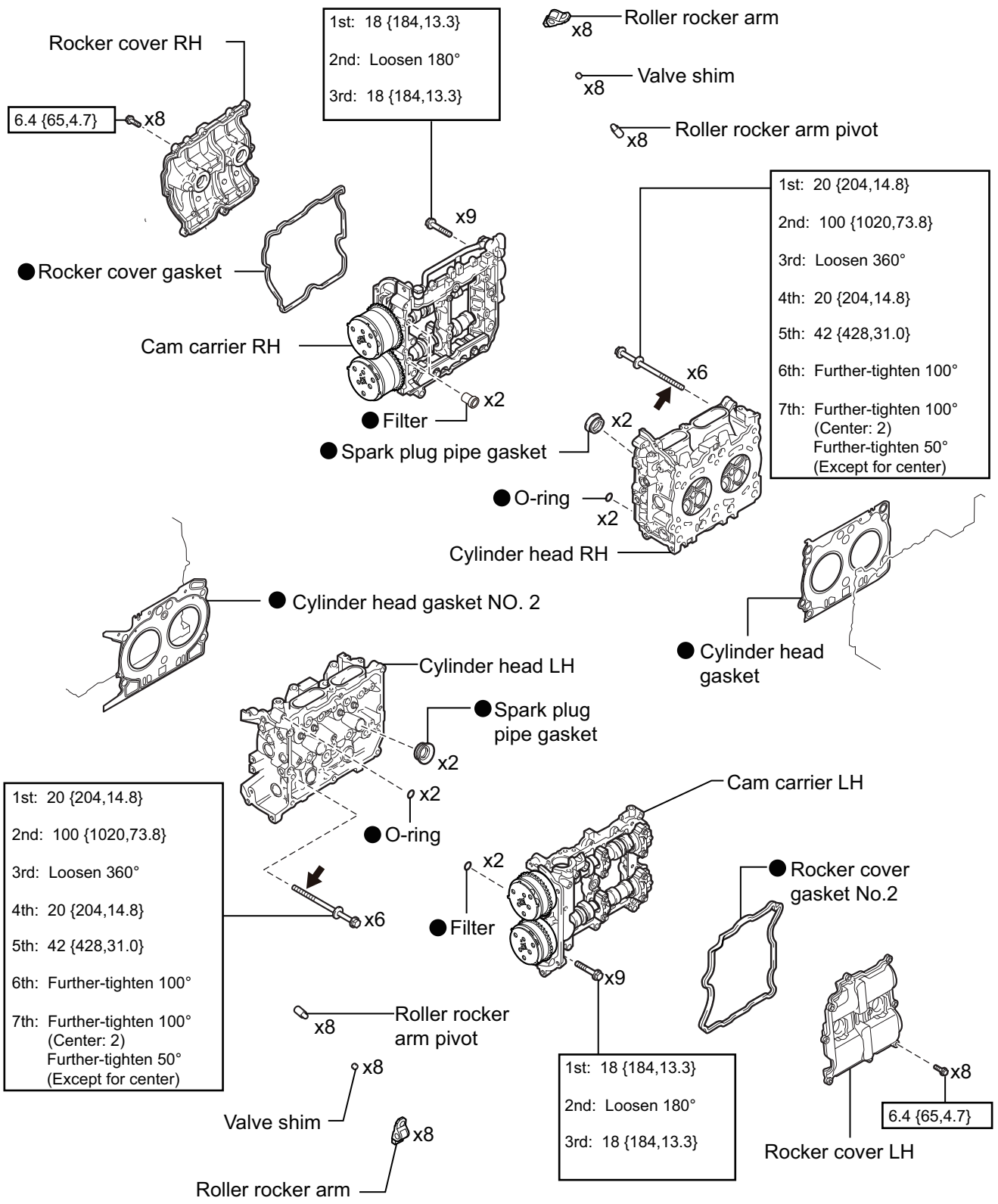

N*m {kgf*cm,ft*lbf} : Tightening torque ● Non-reusable parts ◀ Oil application

ME-21387

Removal

1. Hood SUB-ASSY set

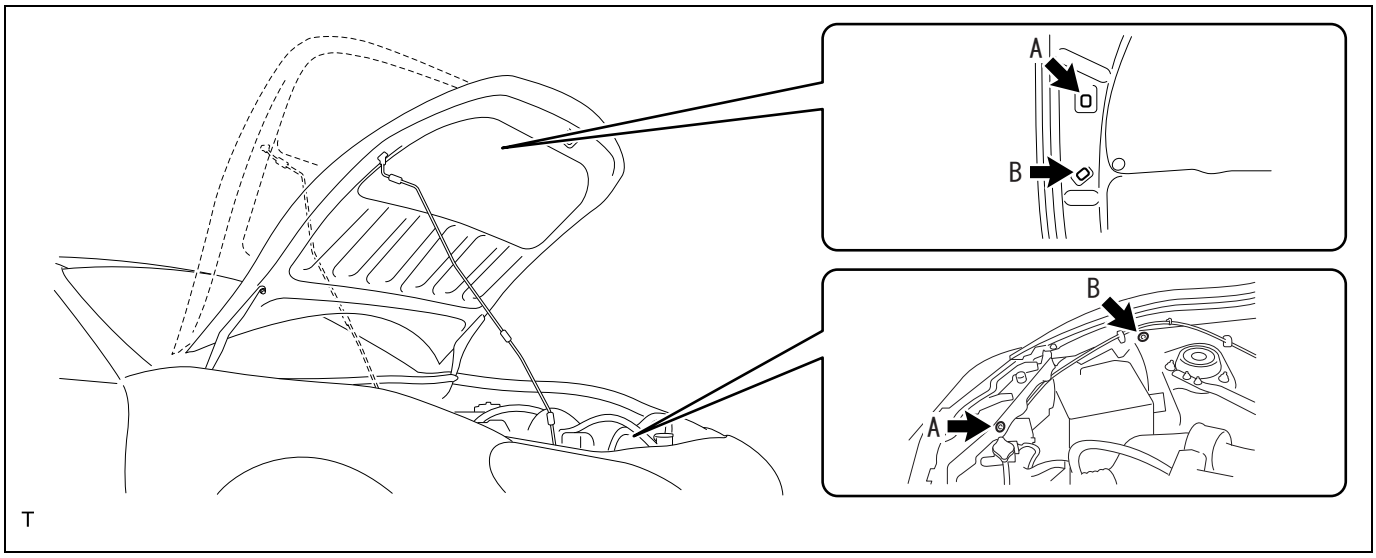

(1) Change the hood stay position from A to B in order to support the hood SUB-ASSY at the position B.

2. Refrigerant draining (Refer to AC - 92)
3. Fuel spill prevention procedure (Refer to FU - 3)
4. Disconnection of the battery ground terminal (Refer to IN - 6)
5. Front strut tower bar LH removal (Refer to FP - 5)
6. Removal of flexible V-shaped bar LH (tS model) (Refer to FP - 5)
7. Front strut tower bar RH removal (Refer to FP - 4)
8. Removal of flexible V-shaped bar RH (tS model) (Refer to FP - 5)

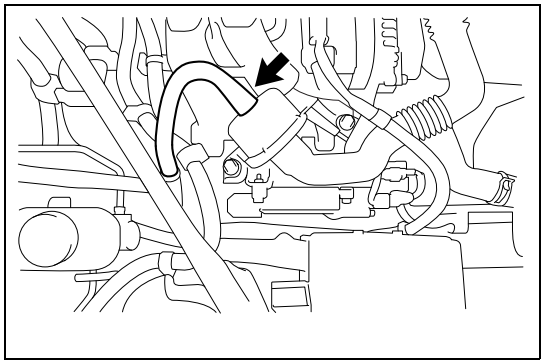

9. Air cleaner case SUB-ASSY removal
   (1) Disconnect the hose from the chamber ASSY.

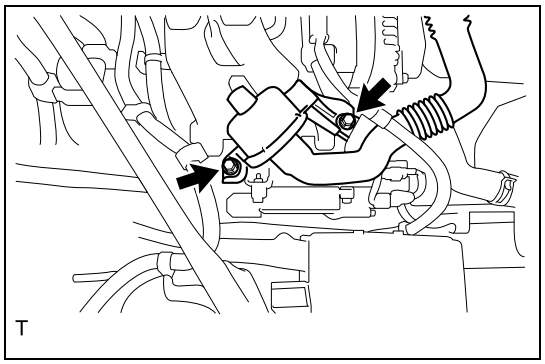

(2) Remove the two bolts and remove the chamber ASSY.

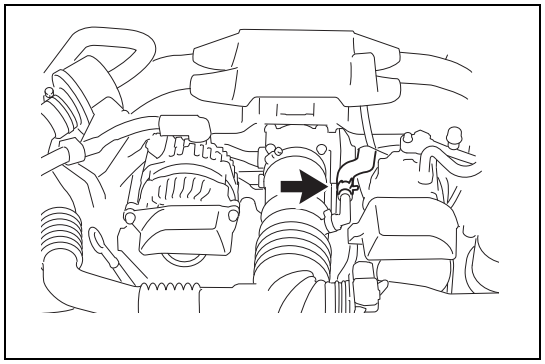

(3) Move the hose clip and disconnect the ventilation hose NO. 2.

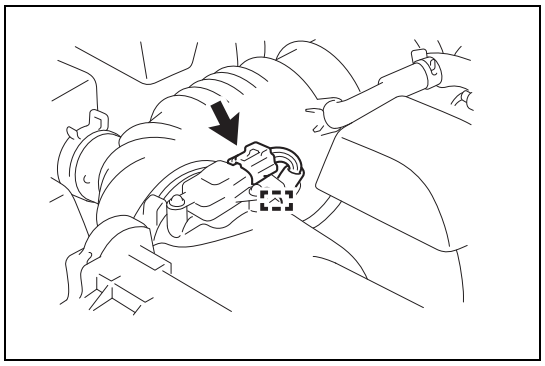

(4) Release the clamp and disconnect the wiring harness from the air cleaner cap.
(5) Disconnect the connector from the intake air flow meter SUB-ASSY.

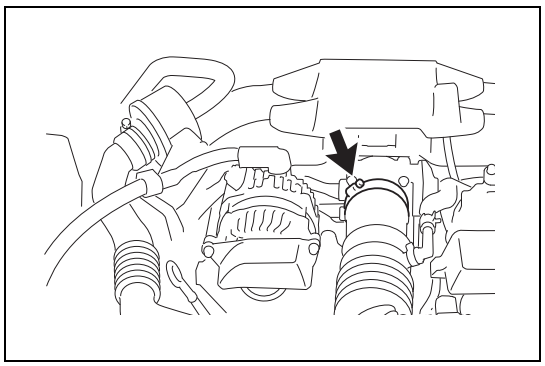

(6) Loosen the hose clamp.

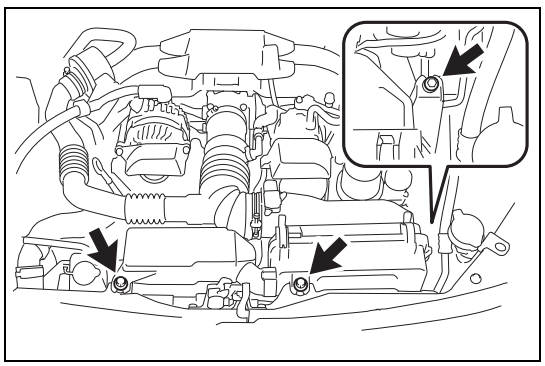

(7) Remove the three bolts and remove the air cleaner case SUB-ASSY.

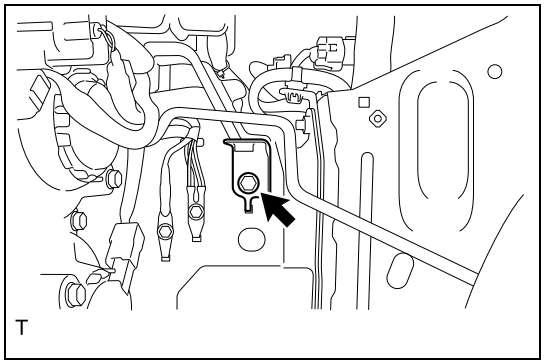

(8) Remove the bolt and remove the stay.

10. Engine oil draining
    (1) Remove the oil filler cap.
    (2) Remove the oil pan drain plug and gasket.
    (3) After draining the oil, install the oil pan drain plug with a new gasket.
    Standard value:T=41.7N·m {425kgf·cm} {30.8ft·lbf}
11. Draining of coolant (SUBARU Super Coolant) (Refer to CO - 16)
12. Removal of radiator reservoir tank ASSY (Refer to CO - 25)

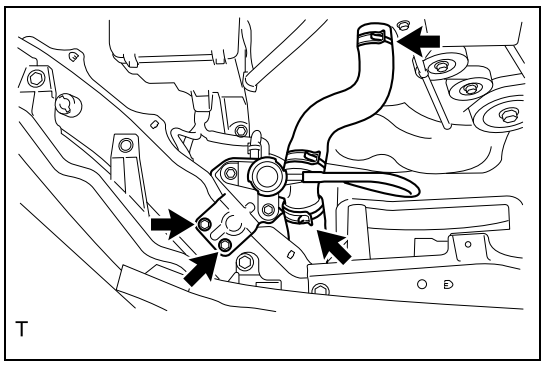

13. Removal of water filler SUB-ASSY
    (1) Remove the two bolts and remove the water filler SUB-ASSY.
    (2) Move the two hose clamps and remove the radiator hose NO. 1 and water filler SUB-ASSY as a unit.
14. Removal of injector driver (Refer to FU - 43)
15. DISCONNECT ENGINE WIRE
    NOTE:
    Fix the disconnected harness components with tape to keep them out of the way.

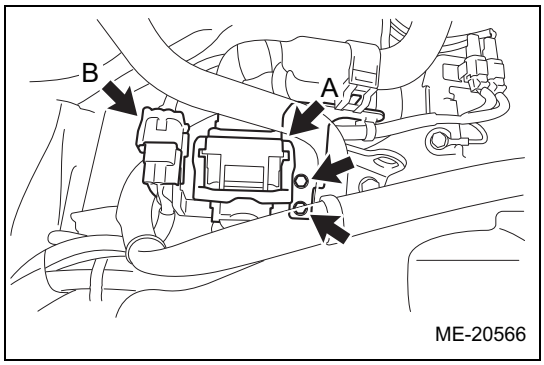

(1) Remove the 2 bolts and wire harness clamp bracket from the No. 2 engine hanger.
(2) Release the lock of connector (A) and disconnect the connector.
(3) Disconnect the connector (B).

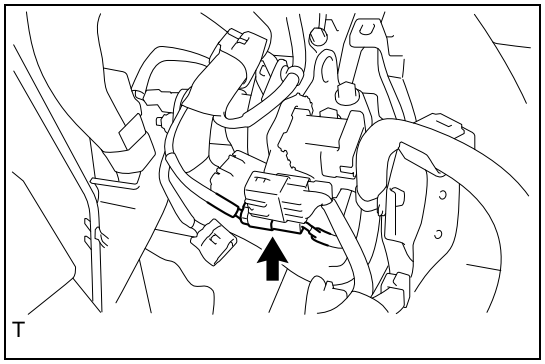

(4) Disconnect the connector.

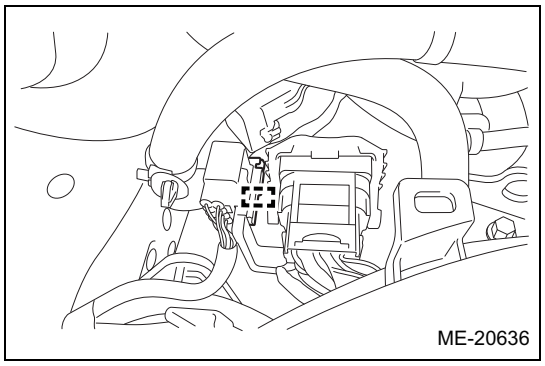

(5) Remove the connector from the engine hanger No. 2.

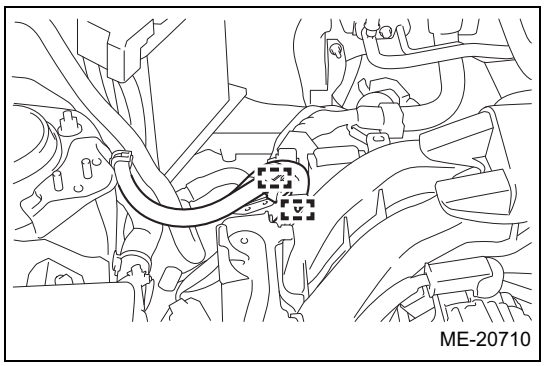

(6) Disconnect the 2 wire harness clamps.

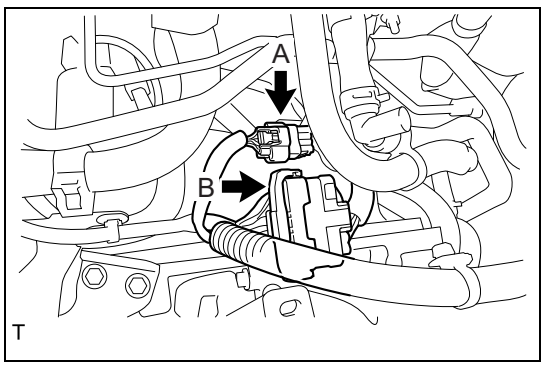

(7) for Automatic Transmission.
(a) Release the lock of connector (A) and disconnect the connector.
(b) Disconnect the connector (B).

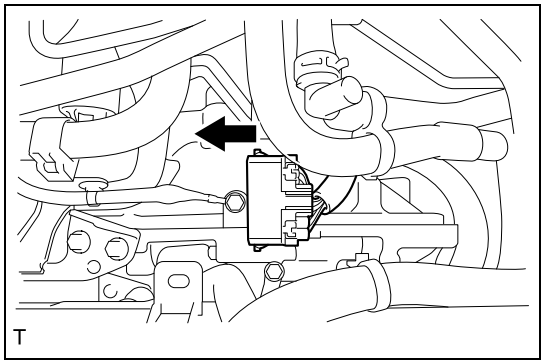

(c) Slide the connector in the direction shown in the illustration, and disconnect the wire harness.

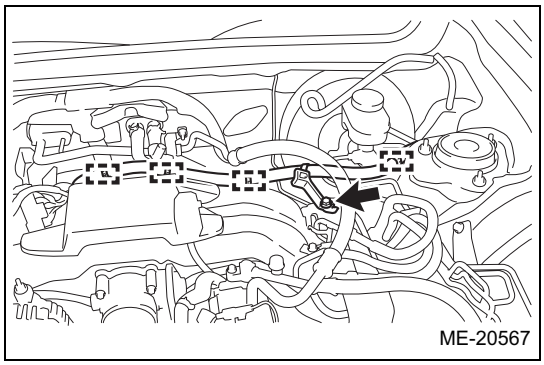

(d) Disconnect the 4 wire harness clamps.
(e) Remove the bolt and wire harness clamp bracket.

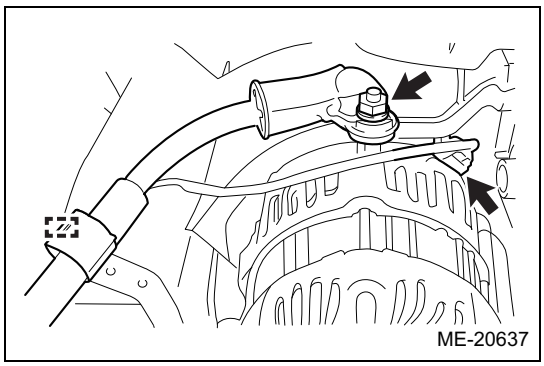

(8) Disconnect the terminal cap.

(9) Remove the nut and disconnect the wire harness from terminal B.
(10) Disconnect the generator connector and disengage the clamp.

16. Removal of alternator cover (Refer to EM - 6)
17. Removal of A/C cover (Refer to EM - 7)
18. Removal of V-belt (Refer to EM - 7)
19. Removal of engine cover SUB-ASSY No. 1 (transmission A/T) (Refer to IE - 16)

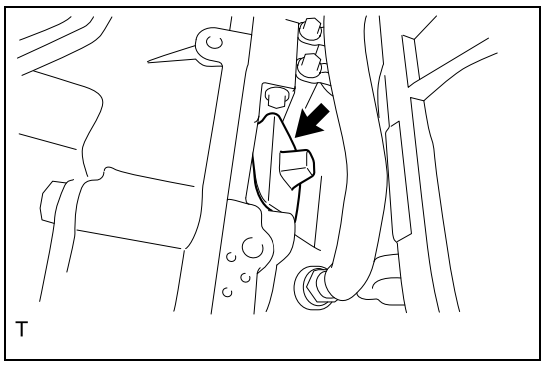

20. Removal of flywheel housing under cover (transmission A/T)
(1) Remove the flywheel housing under cover.

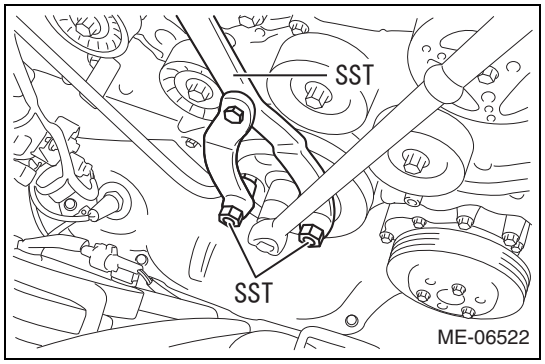

21. Removal of drive plate and torque converter setting bolt (transmission A/T)
    (1) Use the SST to secure the crankshaft pulley.
        SST 18355AA000, 18334AA000

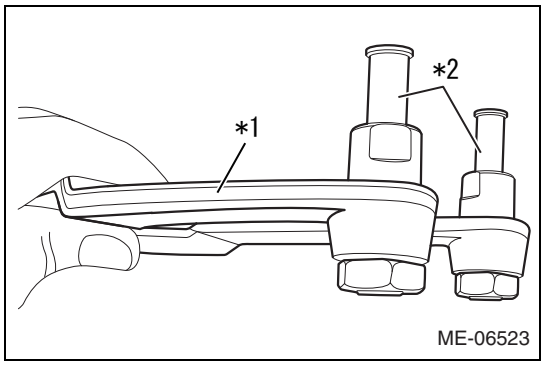

Captions in illustration

*1	18355AA000
*2	18334AA000

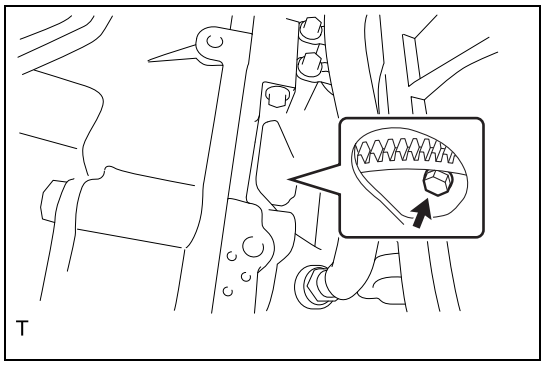

(2) Remove the six drive plate & torque converter setting bolts through the service hole.

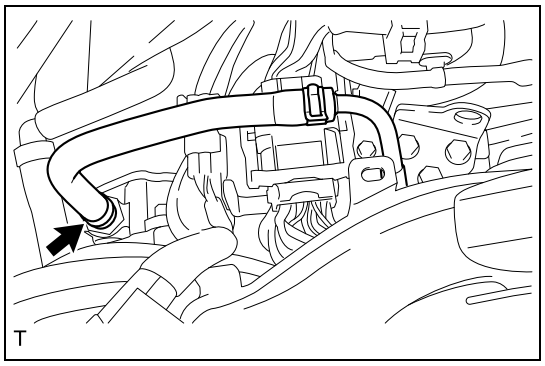

22. Vacuum tube connector hose disconnection (transmission A/T)
    (1) Move the clamp and disconnect the vacuum tube connector hose from the vacuum pump ASSY.

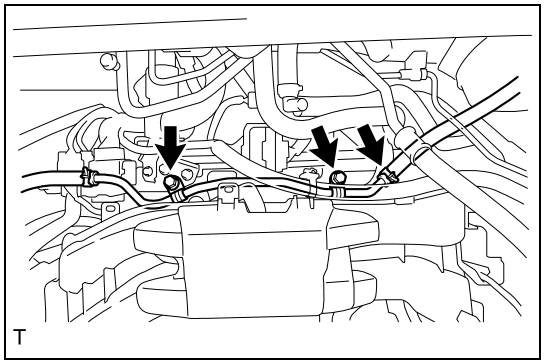

(2) Remove the 2 bolts and disconnect the vacuum tube connector hose.
(3) Loosen the hose clamp and remove the vacuum tube connector hose.

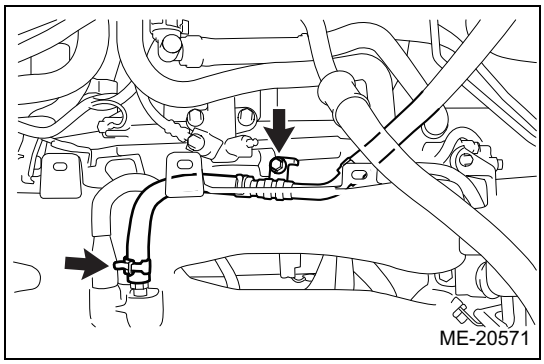

23. Vacuum tube connector hose disconnection (transmission M/T)
(1) Move the hose clamp and disconnect the vacuum tube connector hose from the intake manifold ASSY.
(2) Remove the bolt and disconnect the vacuum tube connector hose.

24. Removal of exhaust manifold (Refer to IE - 35)

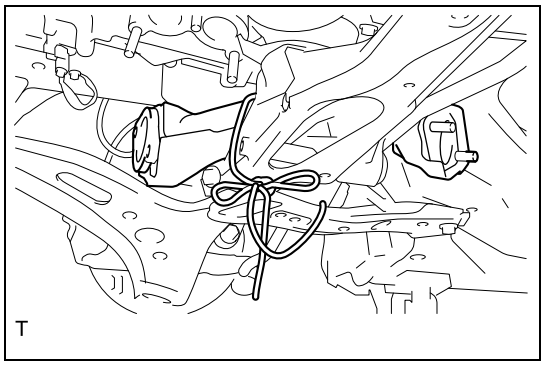

25. Exhaust pipe SUB-ASSY FR fixation (transmission M/T)
(1) Tie the exhaust pipe SUB-ASSY FR to the front suspension cross-member SUB-ASSY with the rope.
NOTE:
This operation is required to avoid dropping the exhaust pipe SUB-ASSY FR.

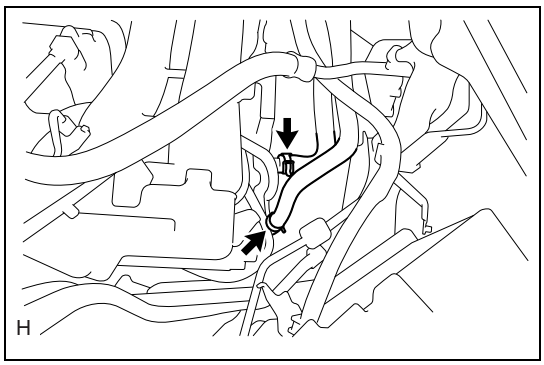

26. Heater water hose disconnection
(1) Move the two hose clamps and disconnect the two heater water hoses.

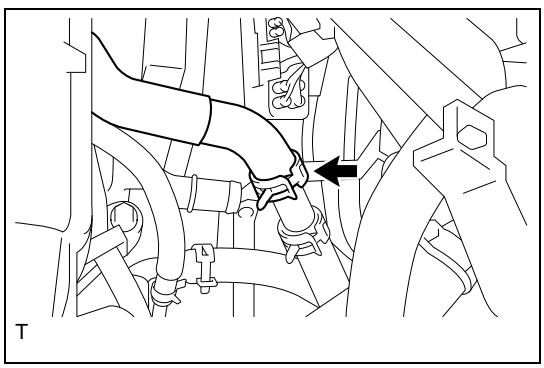

27. Transmission oil cooler hose NO. 3 disconnection (transmission A/T)
(1) Move the hose clamp and disconnect the transmission oil cooler hose NO. 3.

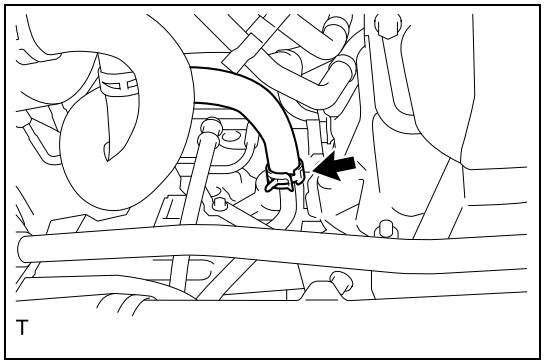

28. Transmission oil cooler hose NO. 1 disconnection (transmission A/T)
    (1) Move the hose clamp and disconnect the transmission oil cooler hose NO. 1.

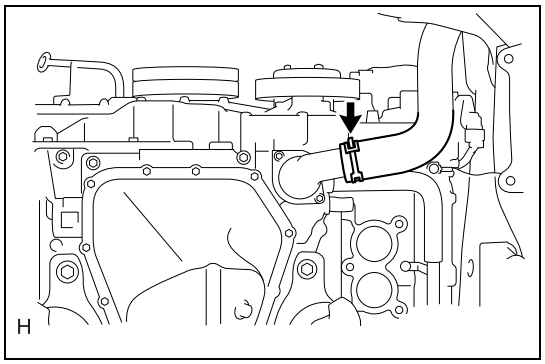

29. Radiator outlet hose disconnection
    (1) Move the hose clamp and disconnect the radiator outlet hose.

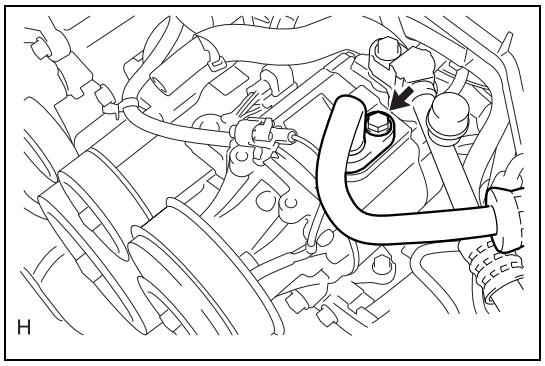

30. Suction hose SUB-ASSY removal
    (1) Remove the bolt and disconnect the suction hose SUB-ASSY.
    (2) Remove the O-ring from the suction hose SUB-ASSY.
    CAUTION:
    Wrap vinyl tape around the fitting areas of disconnected suction hose SUB-ASSY and compressor ASSY (with magnet clutch) to prevent dust, moisture, etc. from entering into them.

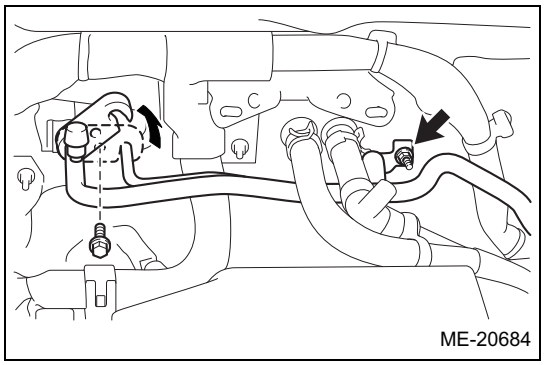

    (3) Remove bolts and turn the hook type connector in the direction of the arrow in the figure.
    (4) Remove the nut and disconnect the suction hose SUB-ASSY.
    (5) Remove the O-ring from the suction hose SUB-ASSY.
    CAUTION:
    Wrap vinyl tape around the fitting areas of the disconnected suction hose SUB-ASSY and the unit to prevent entry of dirt or moisture.

31. Cooler refrigerant discharge hose NO. 1 disconnection (Refer to AC - 146)
32. Removal of starter ASSY (Refer to ST - 21)

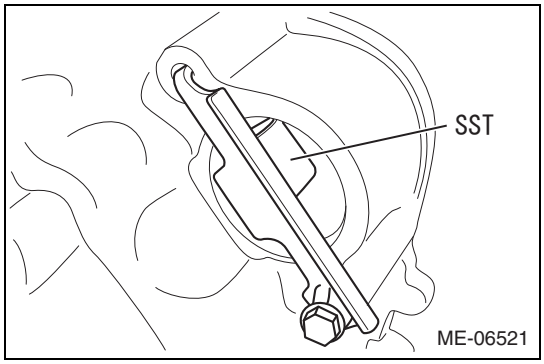

33. SST installation (transmission A/T)
    (1) Attach the SST to the starter hole of torque converter clutch case.
    SST 18750AA010

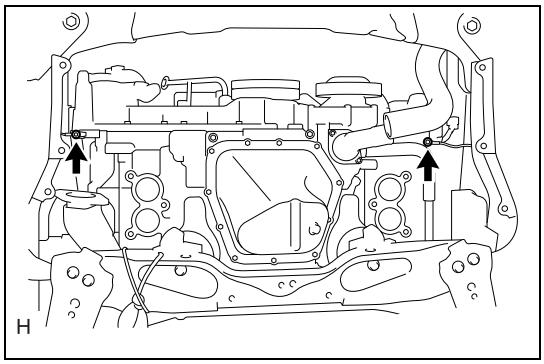

34. Ground cable disconnection
    (1) Remove the two bolts and remove the two ground cables.

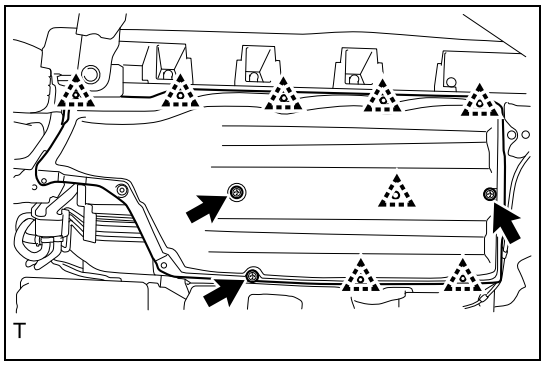

35. Under cover rear LH (with under cover rear LH)
    (1) Remove 3 bolts and 8 clips to remove the under cover rear LH.

36. Removal of stabilizer bar FR (transmission A/T) (Refer to FP - 21)

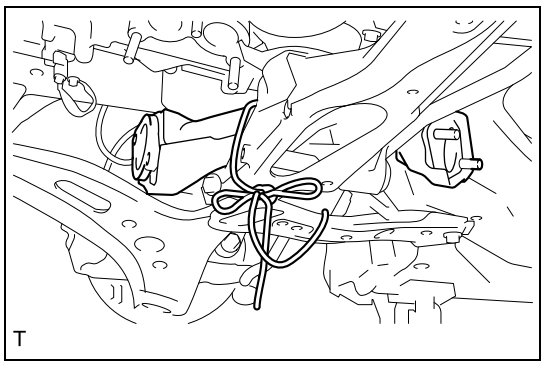

37. Exhaust pipe SUB-ASSY FR fixation (transmission A/T)
    (1) Tie the exhaust pipe SUB-ASSY FR to the front suspension cross-member SUB-ASSY with the rope.
    NOTE:
    This operation is required to avoid dropping the exhaust pipe SUB-ASSY FR.

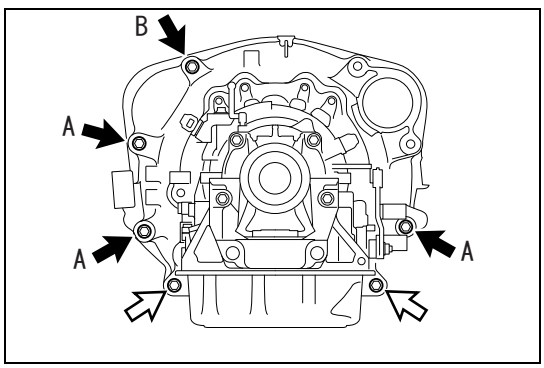

38. Automatic transmission ASSY disconnection (transmission A/T)
    (1) Remove the three bolts A and two nuts.

Captions in illustration

➡	Bolt
⇨	Nut

CAUTION:
Do not remove the bolt B to prevent the ASSY from falling off.

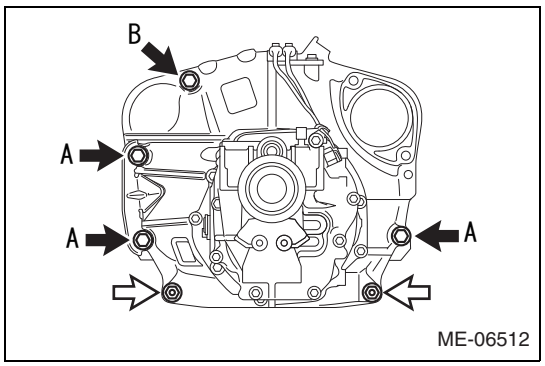

39. Manual transmission ASSY removal (transmission M/T)
    (1) Remove the three bolts A and two nuts.

Captions in illustration

➡	Bolt
⇨	Nut

CAUTION:
Do not remove the bolt B to prevent the ASSY from falling off.

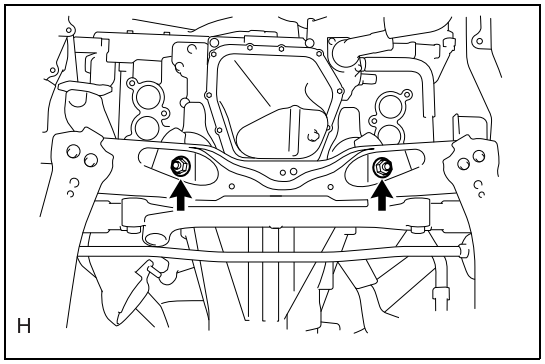

40. Disconnection of front crossmember SUB-ASSY
    (1) Remove the two nuts of front crossmember SUB-ASSY.

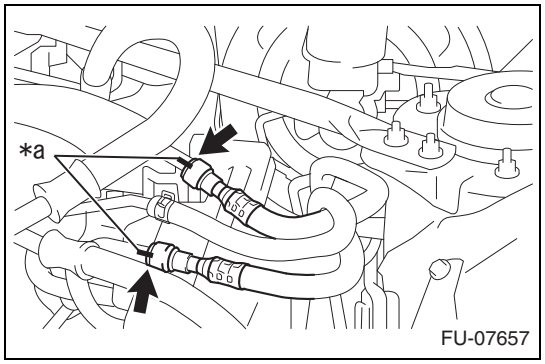

41. SEPARATE FUEL HOSE
    (1) Put alignment marks on the fuel hoses No. 1 and No. 2.

Captions in illustration

*a	Alignment marks

    (2) Using SST, disconnect the fuel hose NO.1 and fuel hose NO.2 from the fuel pipe (See page FU - 3).
    SST 42099AE000

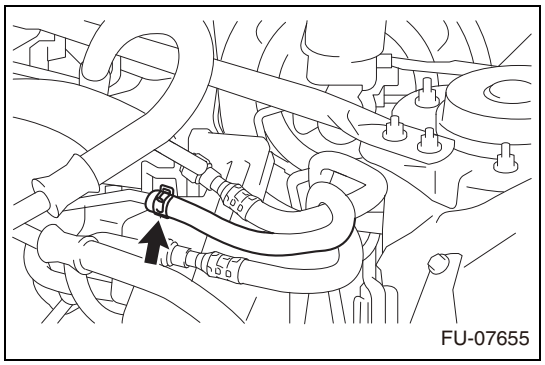

    (3) Remove the clamp and disconnect the purge hose from the fuel pipe.

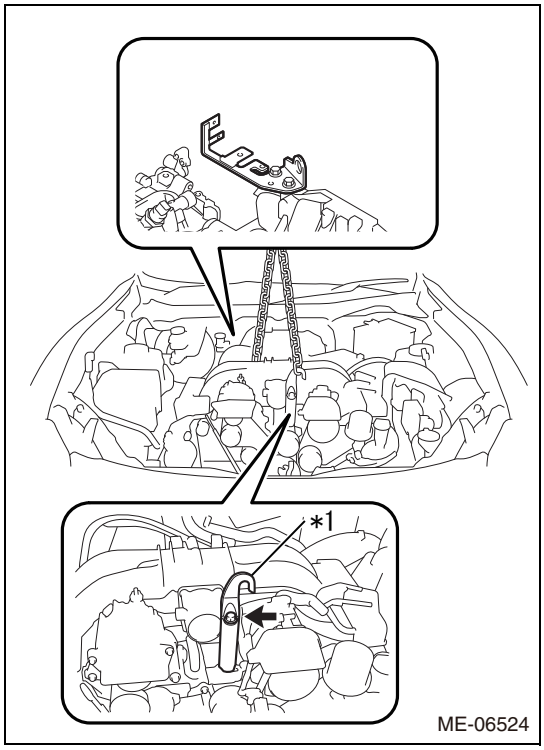

42. Engine hanger installation
    (1) Install the engine hanger NO. 1 to the position as shown in the figure.
    SST 12281-38150, 90119-14120

Captions in illustration

*1	Engine hanger NO. 1

Standard value:T=43N·m {439kgf·cm} {31.7ft·lbf}

(2) Support the engine with an engine sling device and lifter.

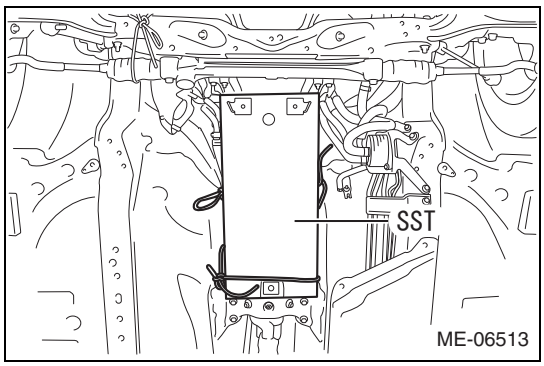

43. Transmission ASSY support (transmission A/T)
    (1) Tie the SST to the transmission ASSY with rope.
    SST 18632AA010

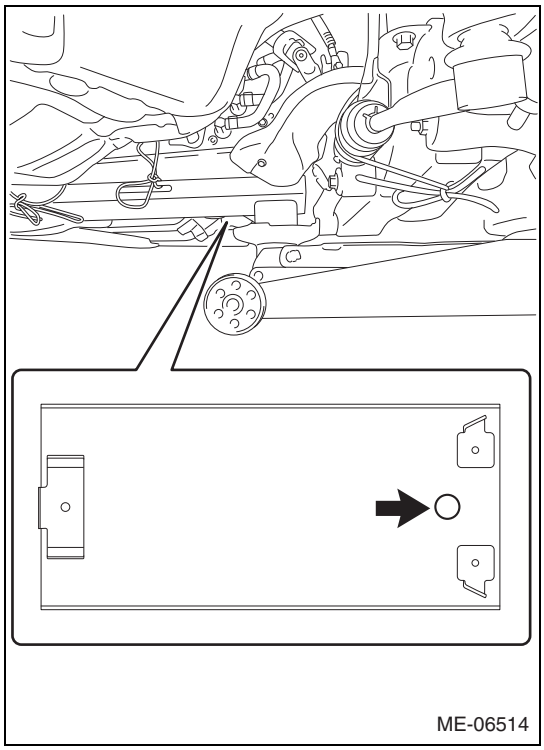

(2) Support the SST with a jack.

Captions in illustration

➡	Center position when supporting with a jack

CAUTION:
Support the transmission ASSY until the installation of partial engine ASSY is completed.

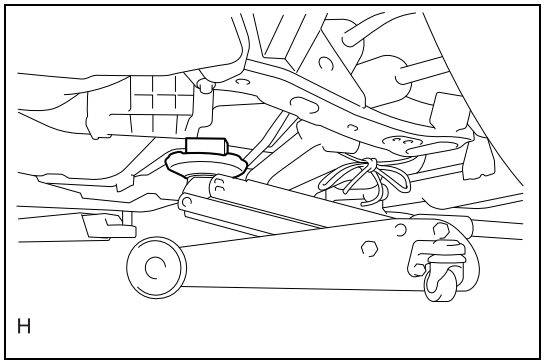

44. Transmission ASSY support (transmission M/T)
    (1) Support the clutch housing portion of transmission ASSY.
    CAUTION:
    Support the transmission ASSY until the installation of partial engine ASSY is completed.

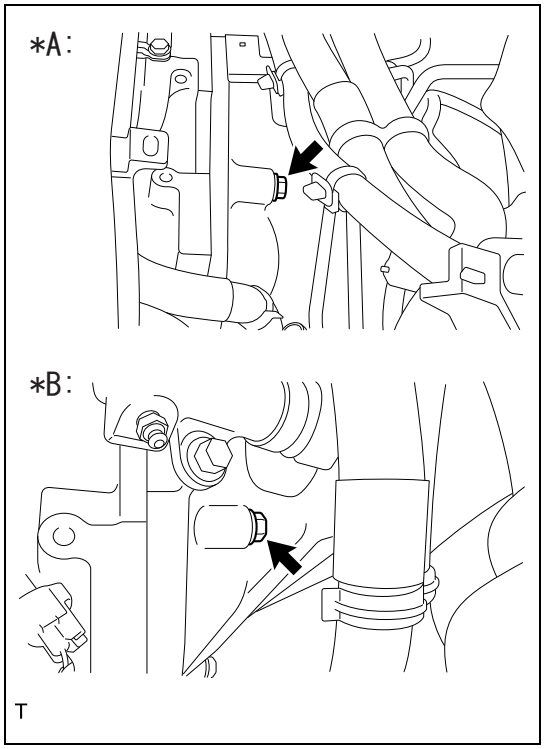

45. Engine ASSY removal
    (1) Remove the connecting bolt of transmission ASSY.

Captions in illustration

*A	Transmission A/T
*B	Transmission M/T

    (2) Suspend the partial engine ASSY with an engine sling device and mini-crane.

46. Removal of drive plate & ring gear SUB-ASSY (transmission A/T) (Refer to EM - 53)
47. Clutch cover ASSY removal (transmission M/T) (Refer to CL - 24)
48. Clutch disc ASSY removal (transmission M/T) (Refer to CL - 24)
49. Flywheel SUB-ASSY removal (transmission M/T) (Refer to EM - 53)
50. Crank angle sensor plate removal (Refer to EM - 53)
51. Engine stand installation

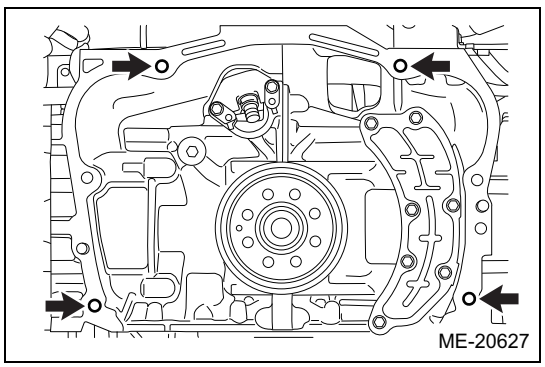

    (1) Use the sections shown in the figure to install the engine ASSY to the engine stand.
    CAUTION:
    - Since the operation with the engine ASSY suspended are danger, never perform it other than when installing the ASSY to the engine stand or removing it from the stand.
    - To prevent damage to the engine, make sure to secure at four positions.

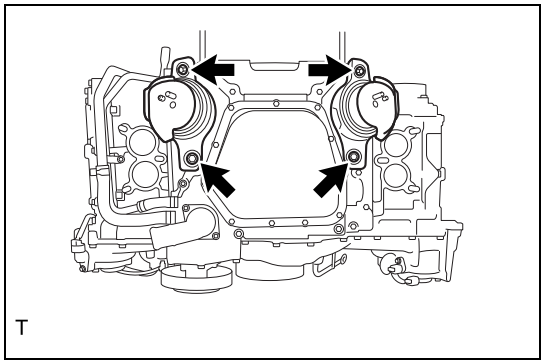
T

52. Engine mounting insulator FR removal
    (1) Remove the four bolts and remove the two engine mounting insulators FR.

53. Engine hanger removal
    (1) Remove the bolt and remove the engine hanger.
54. Removal of alternator ASSY (Refer to BH - 31)
55. Idler pulley SUB-ASSY NO. 2 removal (Refer to LU - 15)
56. Oil level gauge guide removal (Refer to LU - 15)
57. V-ribbed belt tensioner ASSY removal (Refer to LU - 15)
58. Removal of compressor ASSY (with magnet clutch) (Refer to AC - 146)
59. Removal of intake manifold (Refer to IE - 15)
60. Fuel delivery pipe NO.2 removal (Refer to FU - 31)
61. Fuel delivery pipe removal (Refer to FU - 31)
62. Removal of fuel delivery pipe (bank 2 side) (Refer to FU - 31)
63. Removal of fuel delivery pipe (bank 1 side) (Refer to FU - 32)
64. Fuel injector ASSY removal (Refer to FU - 32)
65. Fuel injector seal removal (Refer to FU - 34)
66. Removal of fuel pump ASSY (Refer to FU - 59)
67. Fuel pump lifter removal (Refer to FU - 59)
68. Pump drive case ASSY removal (Refer to FU - 59)

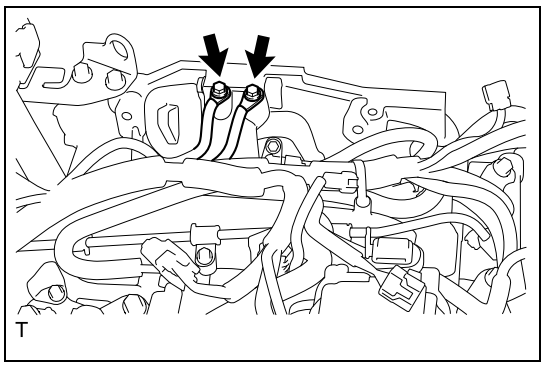
T

69. Engine wiring removal
    (1) Remove the two bolts and disconnect the engine wiring.
    (2) Disconnect each connector and clamp to remove the engine wiring.

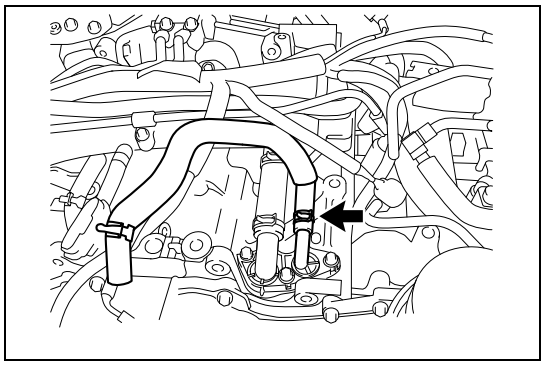

70. Ventilation hose NO. 2 removal
    (1) Move the hose clamp and remove the ventilation hose NO. 2.

EM

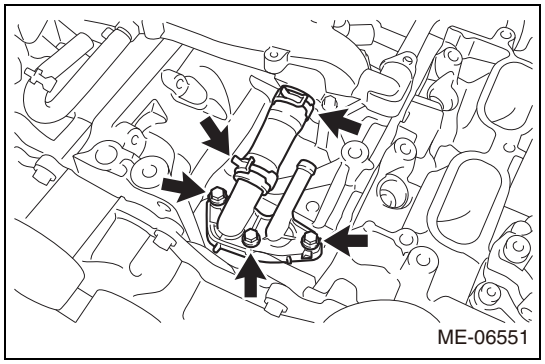

71. PCV hose connector removal
    (1) Remove the three bolts and remove the PCV hose connector.
    (2) Move the hose clamp and disconnect the water by-pass hose NO. 1 from the water pipe ASSY.
    (3) Move the hose clamp and remove the water by-pass hose NO. 1 from the PCV hose connector.

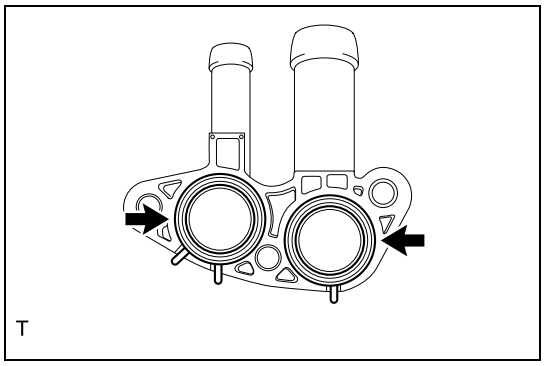

    (4) Remove the two O-rings from the PCV hose connector.

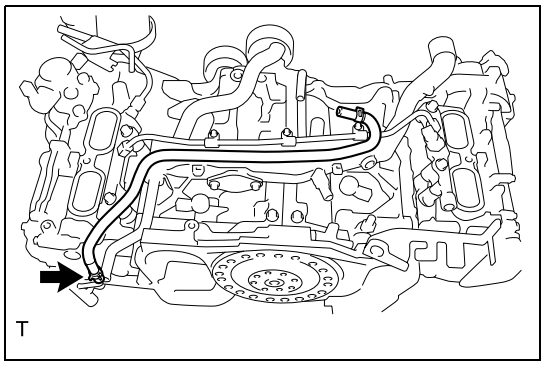

72. Water by-pass hose NO. 2 removal
    (1) Move the hose clamp and remove the water by-pass hose NO. 2.

73. Transmission oil cooler hose NO. 3 removal (transmission A/T)
    (1) Move the hose clamp and remove the transmission oil cooler hose NO. 3.

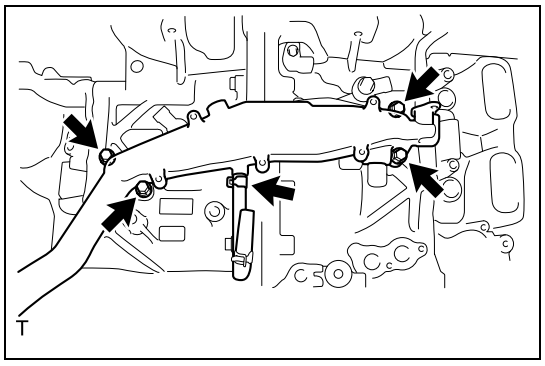

74. Water pipe ASSY removal
    (1) Move the hose clamp and remove the water by-pass hose NO. 3.
    (2) Remove the four bolts, and remove the water pipe ASSY.

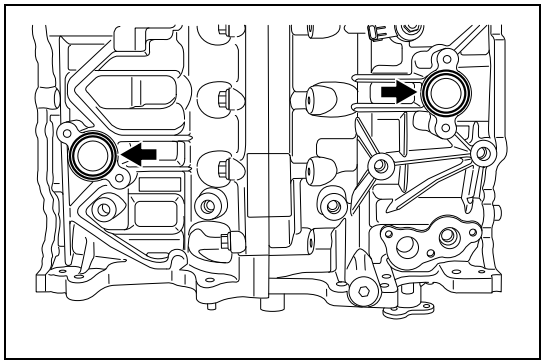

(3) Remove the two O-rings from the cylinder block (bank 1 side and bank 2 side).

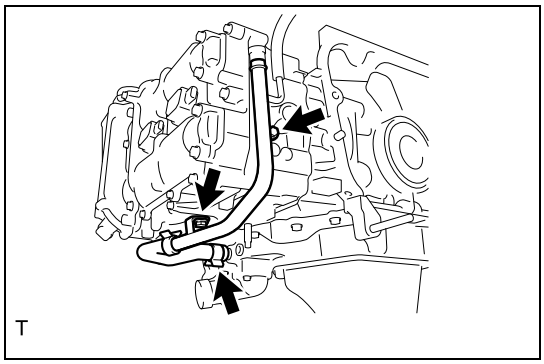

75. Water by-pass pipe NO. 1 removal (transmission M/T)
    (1) Move the hose clamp and disconnect the water by-pass hose NO. 4.
    (2) Remove the two bolts and remove the water by-pass pipe NO. 1.

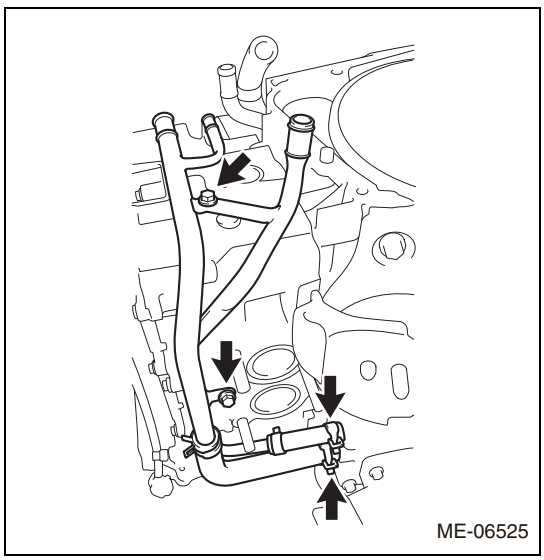

76. Water by-pass pipe NO. 1 removal (transmission A/T)
    (1) Move the two hose clamps and disconnect the two water by-pass hoses.
    (2) Remove the two bolts and remove the water by-pass pipe NO. 1.

77. Vacuum pump ASSY removal (transmission A/T) (Refer to BR - 34)

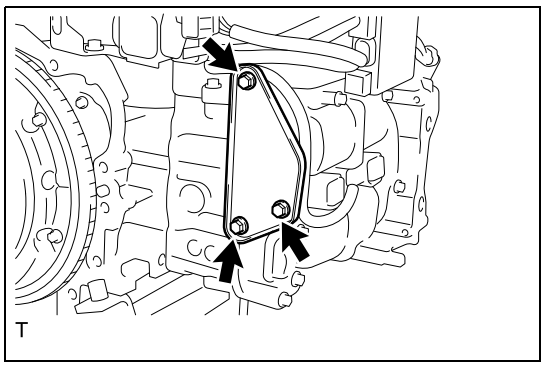

78. Cylinder head plate RR removal (transmission M/T)
    (1) Remove the three bolts and remove the cylinder head plate RR from the cam carrier RH.

79. Removal of knock control sensor (Refer to ES - 701)
80. Removal of crankshaft position sensor (Refer to ES - 682)
81. PCV valve removal (Refer to EC - 21)
82. Idler pulley SUB-ASSY NO. 1 removal (Refer to LU - 15)

83. Water pump pulley removal (Refer to CO - 19)
84. Engine water pump ASSY removal (Refer to CO - 20)
85. Thermostat cover removal (Refer to CO - 37)
86. Thermostat removal (Refer to CO - 37)
87. Crankshaft pulley removal (Refer to EM - 49)
88. Chain cover oil seal removal (Refer to EM - 50)
89. Chain cover removal (Refer to LU - 16)
90. Removal of timing chain (bank 1 side) (Refer to EM - 14)
91. Removal of timing chain (bank 2 side) (Refer to EM - 15)
92. Piston and valve damage prevention procedure (Refer to EM - 31)

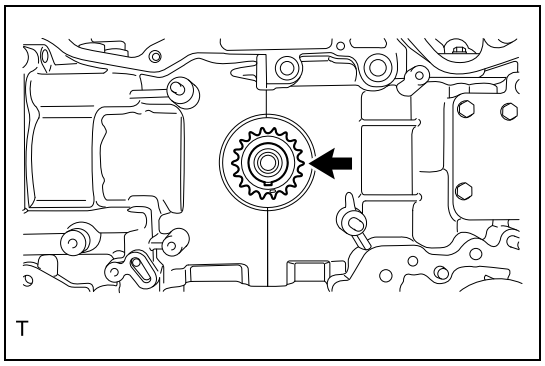

93. Crankshaft sprocket removal
    (1) Remove the crankshaft sprocket.

94. Removal of ignition coil ASSY (bank 2 side)

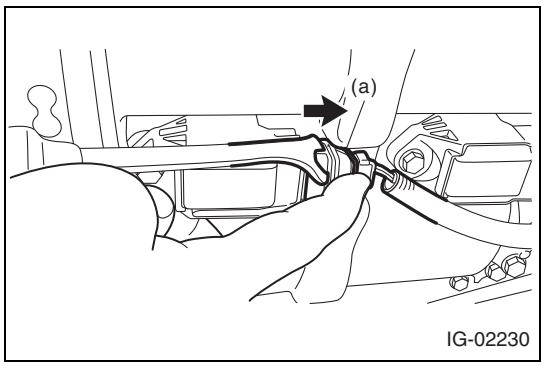

(1) Disconnect 2 connectors for the ignition coil ASSY.
NOTE:
Slide the connectors in the direction of the arrow using a tool such as a clip remover while pressing the spring (a) shown in the figure.

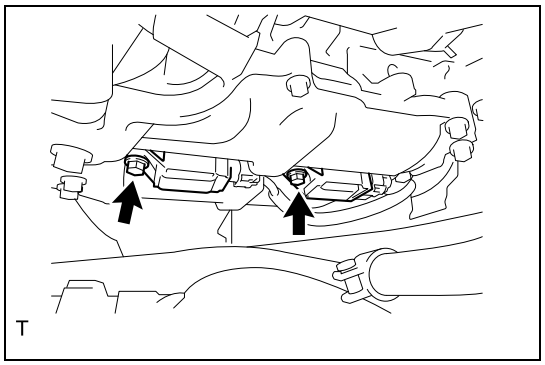

(2) Remove 2 bolts, and remove 2 ignition coil ASSYs.

95. Removal of ignition coil ASSY (bank 1 side)

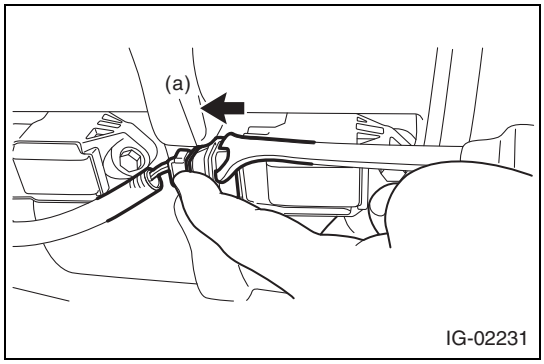

(1) Disconnect 2 connectors for the ignition coil ASSY.
NOTE:
Slide the connectors in the direction of the arrow using a tool such as a clip remover while pressing the spring (a) shown in the figure.

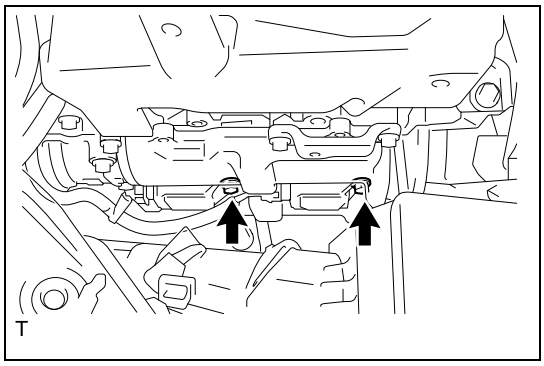

(2) Remove 2 bolts, and remove 2 ignition coil ASSYs.

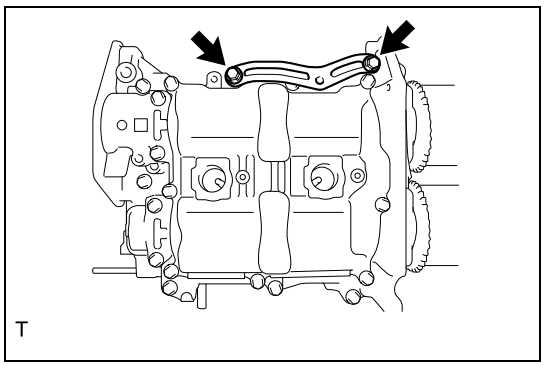

96. Injector driver bracket removal
(1) Remove the two bolts and remove the injector driver bracket.

97. Removal of rocker cover RH
(1) Operate the engine stand, and make the bank 1 side face upward.

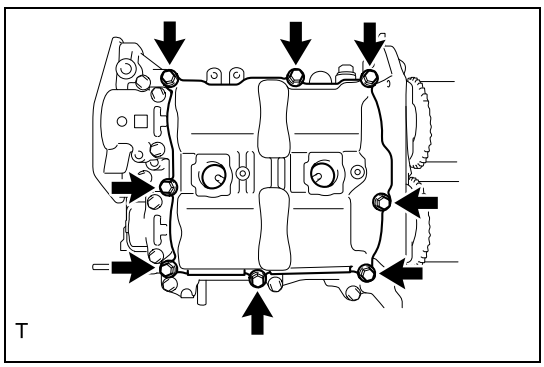

(2) Remove the 8 bolts.

(3) Remove the rocker cover RH using a flat tip screwdriver wrapped with protective tape.
CAUTION:
Do not damage the cam carrier, cam cap and rocker cover.

(4) Remove the rocker cover gasket.

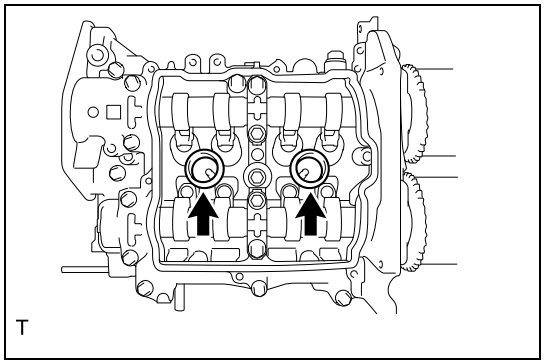

(5) Remove the two spark plug pipe gaskets.
CAUTION:
When removing the seal gasket using scraper etc., be careful not to damage the cam lobe of camshaft.

EM

98. Cam carrier RH removal
CAUTION:
Do not remove the intake and exhaust camshafts before removing the cam carrier. Doing so will result in distortion of cam carrier.

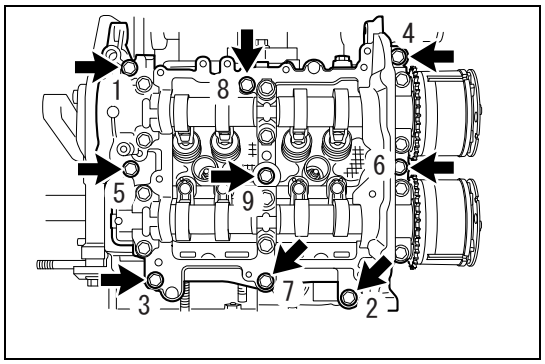

(1) Loosen the nine bolts equally in the order as shown in the figure and remove them.

(2) Remove the cam carrier RH using a flat tip screwdriver wrapped with protective tape.
CAUTION:
Do not damage the cylinder head and cam carrier.

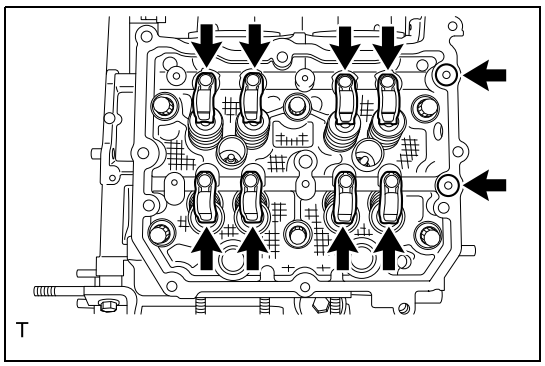

(3) Remove the two O-rings and eight roller rocker arm from the cylinder head RH.
NOTE:
The removed parts must be organized by installation location.

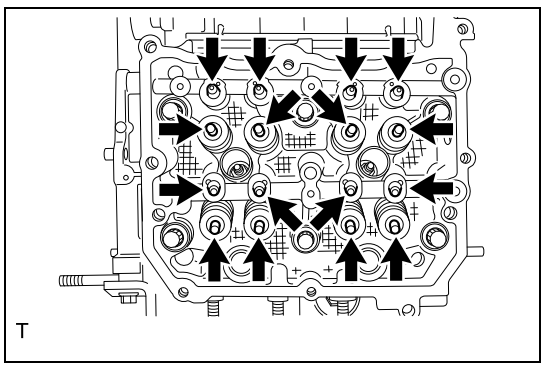

(4) Remove the eight valve shims and eight roller rocker arm pivots from the cylinder head RH.
NOTE:
The removed parts must be organized by installation location.

99. Cylinder head RH removal (Refer to EM - 42)

100. Cylinder head gasket removal (Refer to EM - 42)

101.Rocker cover LH removal

(1) Operate the engine stand, and make the bank 2 side face upward.

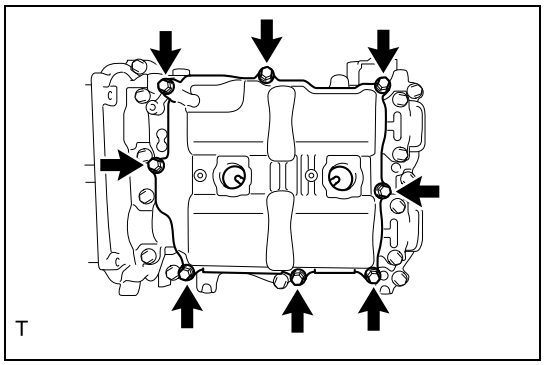

(2) Remove the 8 bolts.

(3) Remove the rocker cover LH using a flat tip screwdriver wrapped with protective tape.
CAUTION:
Do not damage the cam carrier, cam cap and rocker cover.

(4) Remove the rocker cover gasket NO. 2.

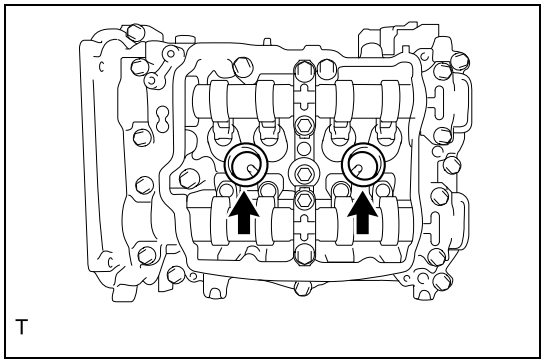

(5) Remove the two spark plug pipe gaskets.
CAUTION:
When removing the seal gasket using scraper etc., be careful not to damage the cam lobe of camshaft.

102.Cam carrier LH removal

CAUTION:
Do not remove the intake and exhaust camshafts before removing the cam carrier. Doing so will result in distortion of cam carrier.

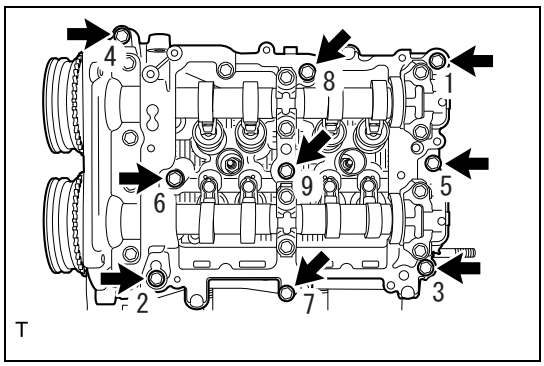

(1) Loosen the nine bolts equally in the order as shown in the figure and remove them.

(2) Remove the cam carrier using a flat tip screwdriver wrapped with protective tape.
CAUTION:
Do not damage the cylinder head and cam carrier.

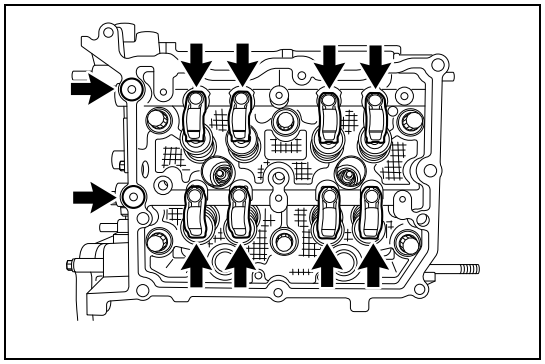

(3) Remove the two O-rings and eight roller rocker arms from the cylinder head LH.
NOTE:
The removed parts must be organized by installation location.

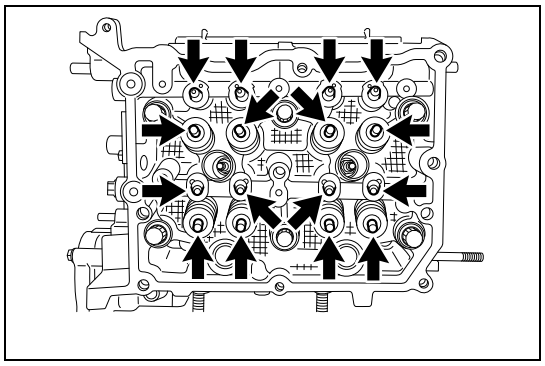

(4) Remove the eight valve shims and eight roller rocker arm pivots from the cylinder head LH.
NOTE:
The removed parts must be organized by installation location.

103.Cylinder head LH removal (Refer to EM - 42)

104.Cylinder head gasket NO. 2 removal (Refer to EM - 42)

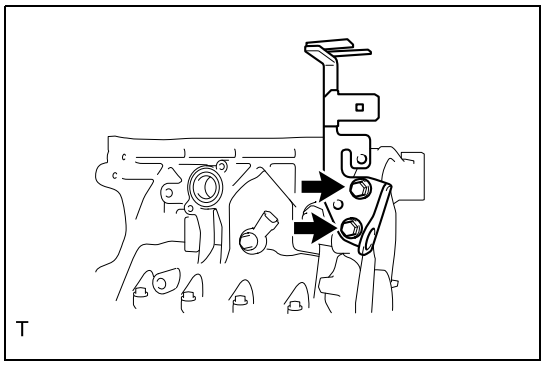

105.Engine hanger NO. 2 removal

(1) Remove the two bolts and remove the engine hanger NO. 2 from the cylinder block (bank 1 side).

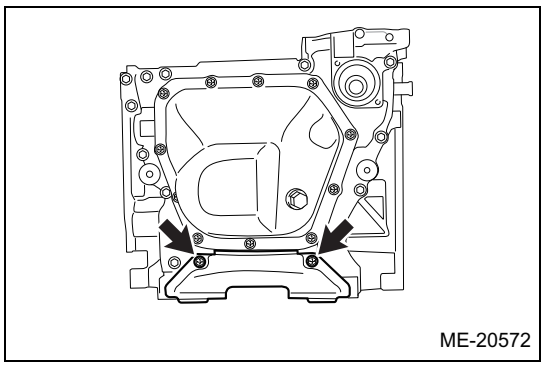

106.Removal of housing cover

(1) Remove the two bolts and remove the housing cover from the oil pan upper.

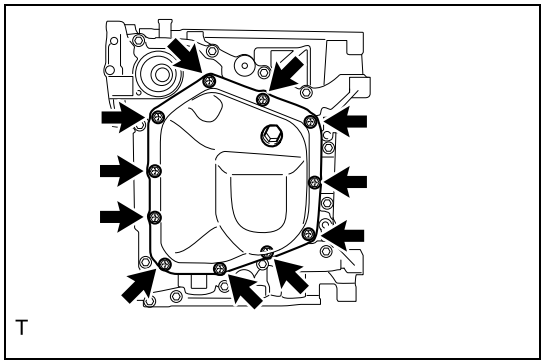
T

107.Oil pan removal

(1) Remove the 11 bolts.

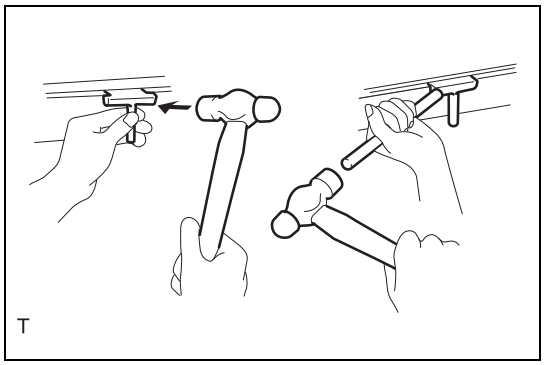
T

(2) Remove the oil pan with a oil pan seal cutter.

CAUTION:

Do not damage the installation surface of oil pan upper and the flange portion of oil pan.

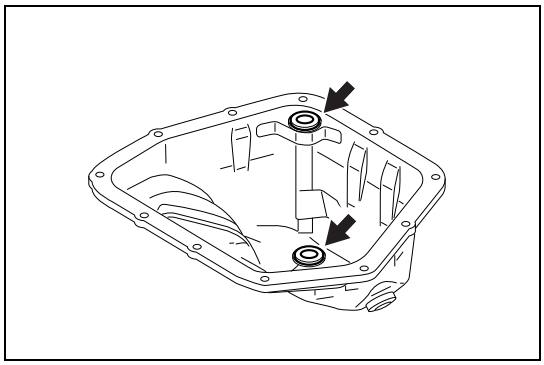

(3) Remove the two seal rings from the oil pan.

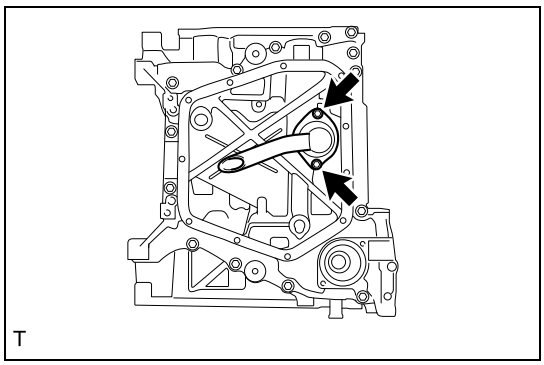
T

108.Oil strainer removal

(1) Remove the two bolts and remove the oil strainer.

(2) Remove the O-ring.

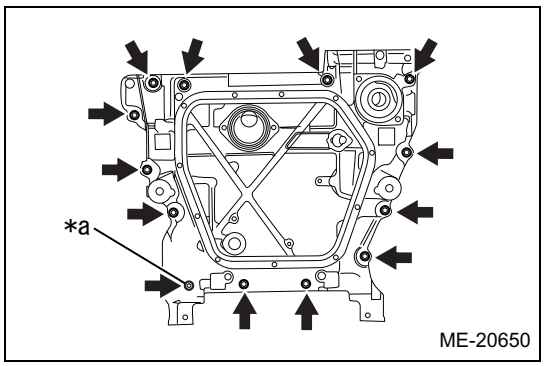

109.Oil pan upper removal

(1) Remove the 13 bolts.

Captions in illustration

*a	Use Torx® bit T45 for removal.

(2) Remove the oil pan upper using a flat tip screwdriver wrapped with protective tape.

CAUTION:

Do not damage the installation surfaces of cylinder block and oil pan upper.

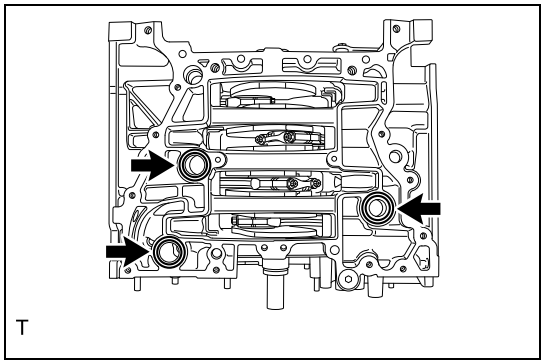

(3) Remove the three O-rings from the cylinder block.

EM

Installation

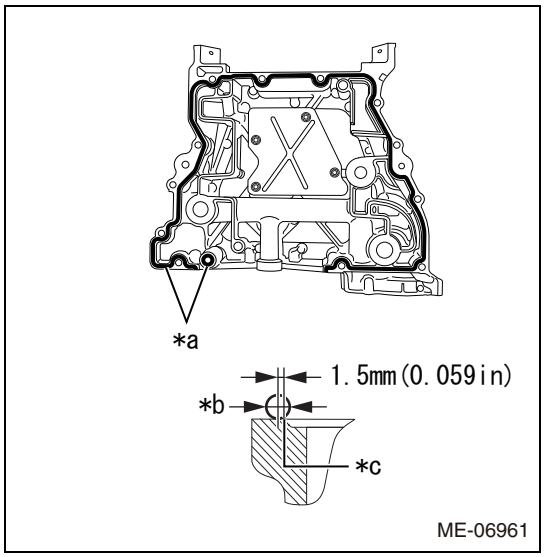

1. Oil pan upper installation
   (1) Apply THREE BOND 1217G/1217H or equivalent to the mating surface of oil pan upper as shown in the figure.

Captions in illustration

*a	THREE BOND 1217G/1217H or equivalent
*b	Diameter: 4.0 to 6.0mm {0.158 to 0.236 in}
*c	Groove end

CAUTION:
- Clean and degrease the installation surface.
- Install within 5 min. after applying liquid gasket.
- Apply liquid gasket 1.5 mm {0.0591 in} outside from the groove on the oil pan upper. However, application of liquid gasket on the groove around the bolt hole is allowed.

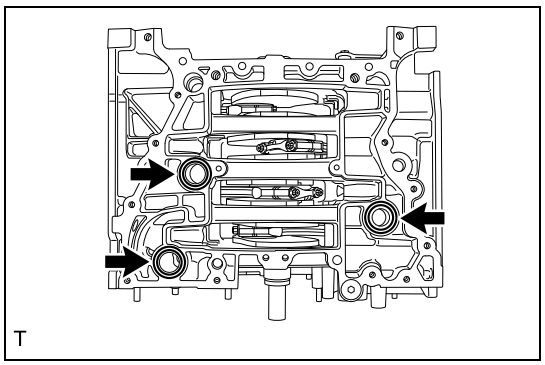

(2) Install three new O-rings to the cylinder block.

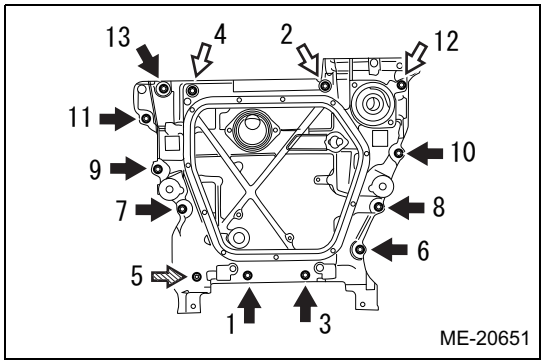

(3) Tighten the 13 bolts (A, B and C) in the order as shown in the figure to install the oil pan upper to the cylinder block.
Standard value:T=18N·m {184kgf·cm} {13.3ft·lbf}

Captions in illustration

➡	Bolt A
⇨	Bolt B
⇛	Bolt C

Bolt type	Bolt length (except for head)
Bolt A	25 mm {0.984 in}
Bolt B	75 mm {2.953 in}
Bolt C	30 mm{1.181 in}

NOTE:

- Tighten the bolt C using Torx® bit T45.
- After tightening, if the liquid gasket is squeezed out onto the seal surface of chain cover, completely remove any squeezed-out liquid gasket.

2. Oil strainer installation
   (1) Install a new O-ring.

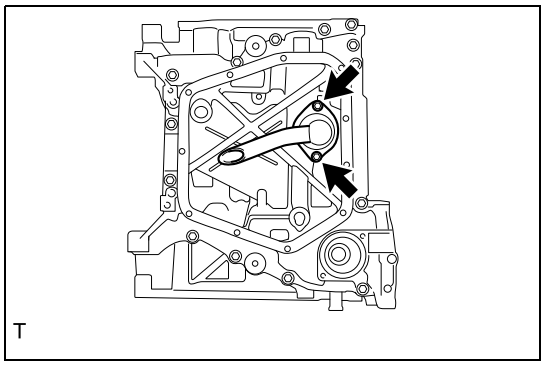

   (2) Install the oil strainer to the oil pan upper with the two bolts.
   Standard value:T=6.4N·m {65kgf·cm} {4.7ft·lbf}

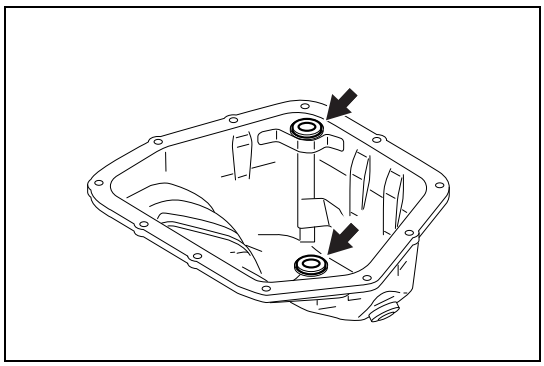

3. Oil pan installation
   (1) Install two new oil pan seal rings to the oil pan.

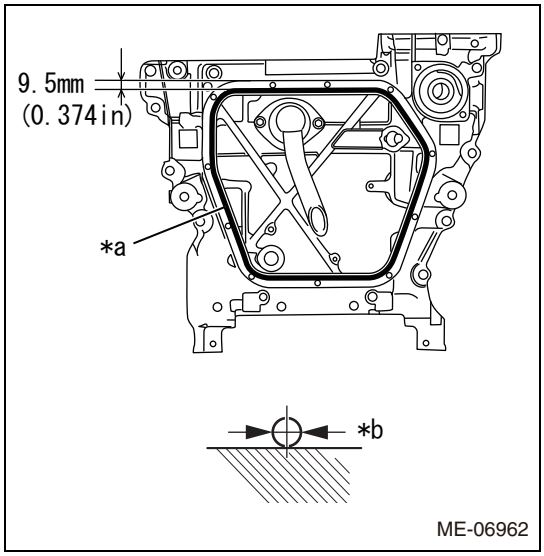

   (2) Apply THREE BOND 1217G/1217H or equivalent to the mating surface of oil pan for the oil pan upper as shown in the figure.

Captions in illustration

*a	THREE BOND 1217G/1217H or equivalent
*b	Diameter: 4.0 to 6.0mm {0.158 to 0.236 in}

CAUTION:

- Clean and degrease the installation surface.
- Install within 5 min. after applying liquid gasket.

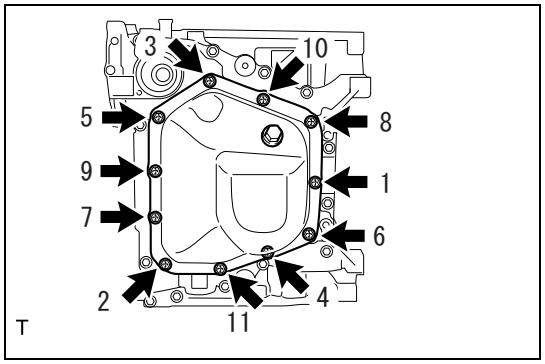

(3) Tighten the 11 bolts in the order as shown in the figure to install the oil pan.
Standard value:T=6.4N·m {65kgf·cm} {4.7ft·lbf}

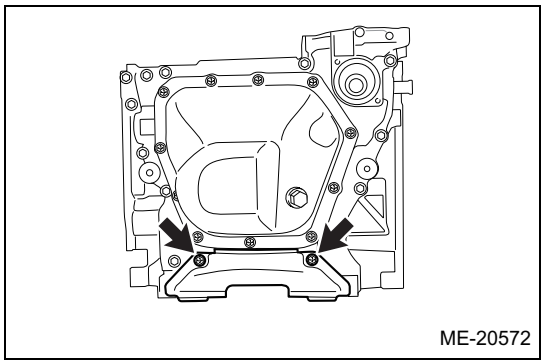

4. Installation of housing cover
(1) Install the housing cover to the oil pan upper with the two bolts.
Standard value:T=5.0N·m {51kgf·cm} {3.7ft·lbf}

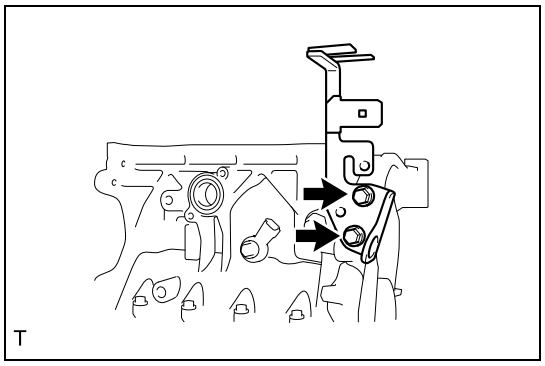

5. Engine hanger NO. 2 installation
(1) Install the engine hanger NO. 2 to the cylinder block (bank 1 side) with the two bolts.
Standard value:T=21N·m {214kgf·cm} {15.5ft·lbf}

6. Cylinder head gasket NO. 2 installation (Refer to EM - 42)
7. Cylinder head LH installation (Refer to EM - 43for oil pan upper)
8. Cam carrier LH installation

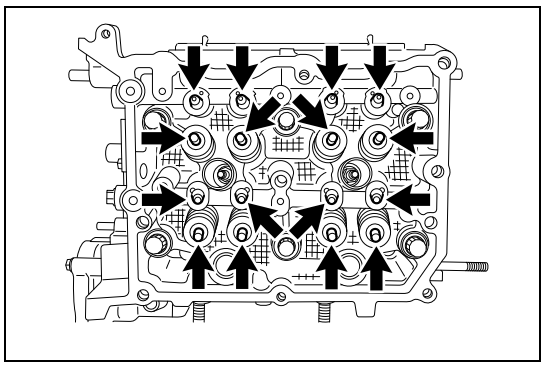

(1) Apply new engine oil to the valve shim and roller rocker arm pivot, and install them to the cylinder head LH.

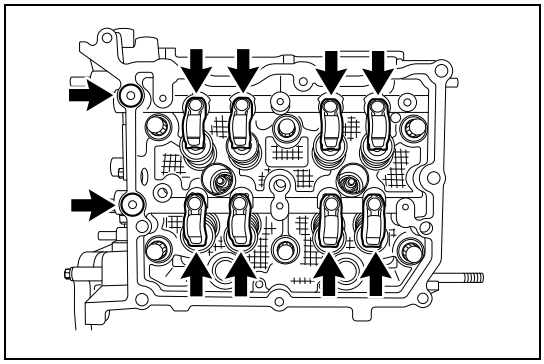

(2) Apply new engine oil to the eight roller rocker arms and two new O-rings, and install them to the cylinder head LH.

(3) Apply THREE BOND 1217G/1217H or equivalent to the mating surface of cam carrier LH as shown in the figure.

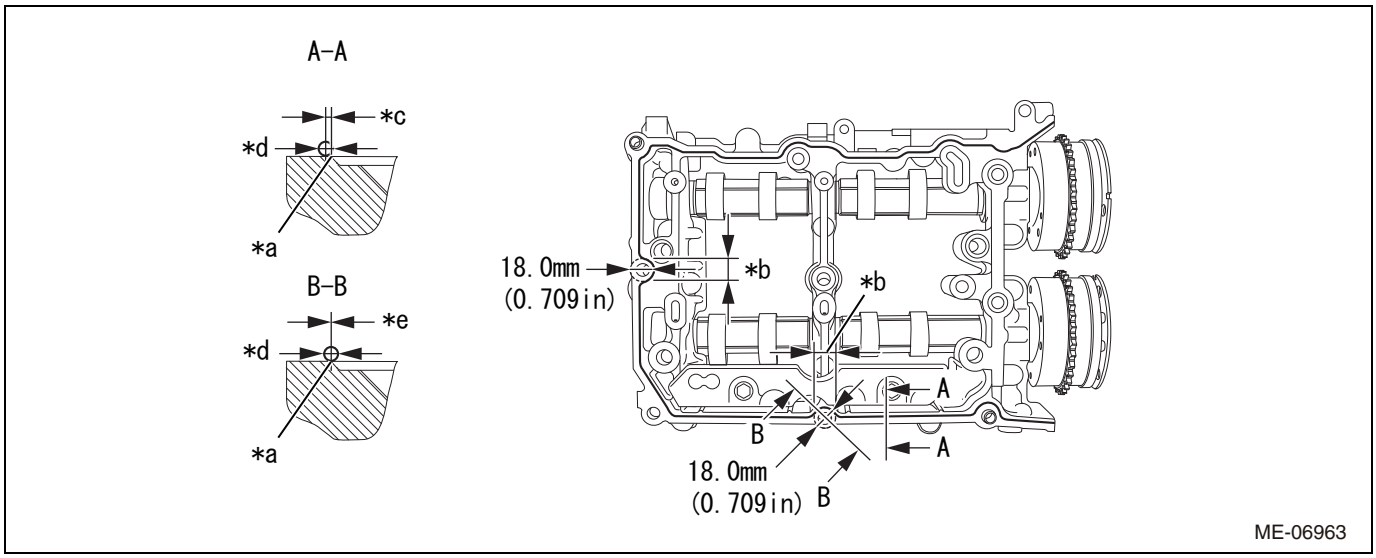

Captions in illustration

*a	Groove end	*b	Area of B-B
*c	1.0 mm {0.0394 in} or less	*d	Diameter: 2.5 to 3.5 mm {0.098 to 0.138 in}
*e	-0.5 to 0.5 mm {-0.0197 to 0.0197 in}	-	-

CAUTION:
- Clean and degrease the installation surface.
- Do not apply liquid gasket excessively.
- Install within 5 min. after applying liquid gasket.
- Completely remove any liquid gasket that is squeezed out on the installation surface of chain cover.

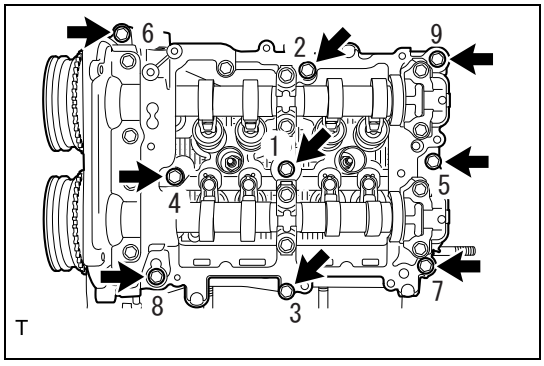

(4) Tighten the 9 bolts in the order as shown in the figure to install the cam carrier LH.
Standard value:T=18N·m {184kgf·cm} {13.3ft·lbf}

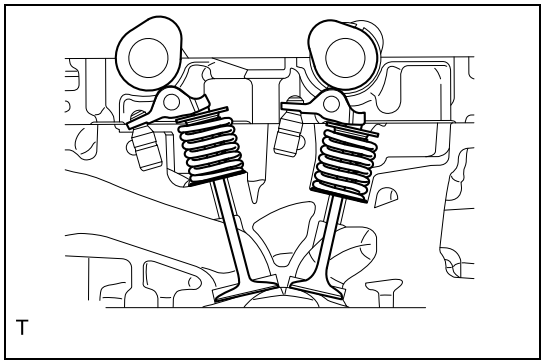

NOTE:
Set the intake camshaft LH and exhaust camshaft LH to the zero-lift position.

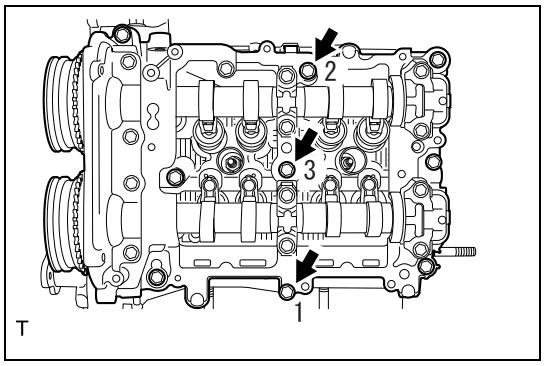

(5) Loosen the three bolts by 180° in the order as shown in the figure.

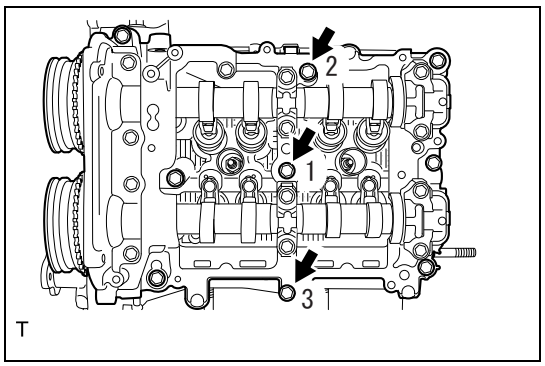

(6) Tighten the three bolts in the order as shown in the figure.
Standard value:T=18N·m {184kgf·cm} {13.3ft·lbf}

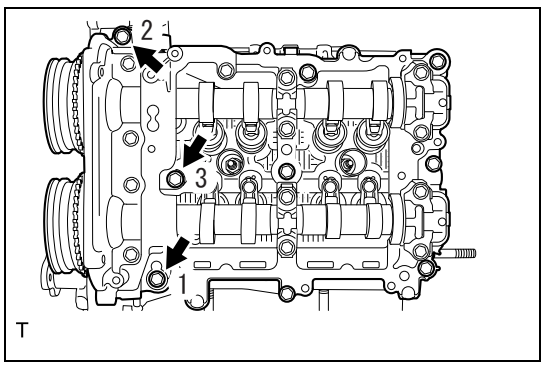

(7) Loosen the three bolts by 180° in the order as shown in the figure.

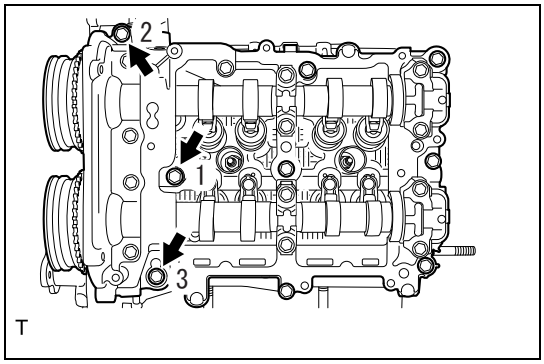

(8) Tighten the three bolts in the order as shown in the figure.
Standard value:T=18N·m {184kgf·cm} {13.3ft·lbf}

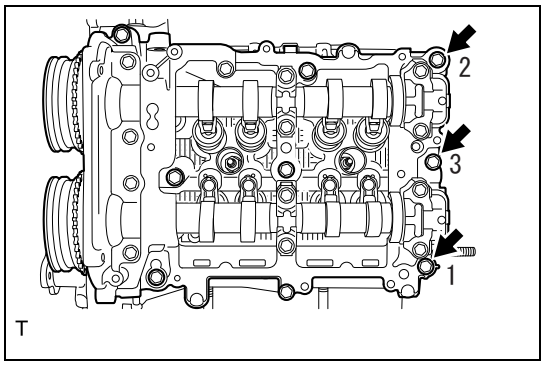

(9) Loosen the three bolts by 180° in the order as shown in the figure.

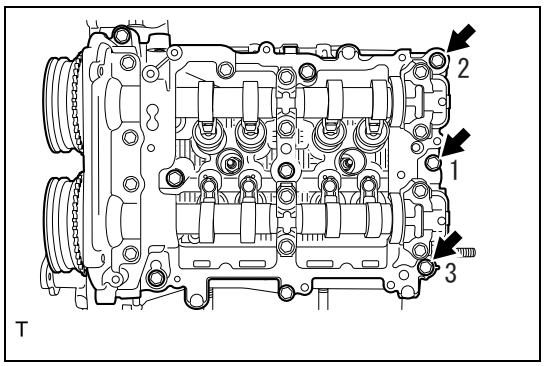

(10) Tighten the three bolts in the order as shown in the figure.
Standard value:T=18N·m {184kgf·cm} {13.3ft·lbf}
NOTE:
After tightening, if the liquid gasket is squeezed out onto the seal surface of chain cover, completely remove any squeezed-out liquid gasket.

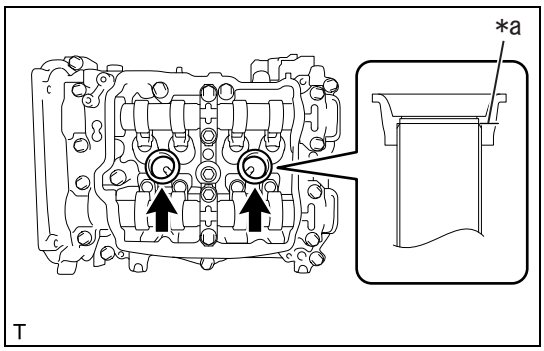

9. Rocker cover LH installation
(1) Apply a thin coat of new engine oil to two new spark plug pipe gaskets and insert them onto the spark plug pipe edge.

Captions in illustration

*a	Spark plug pipe edge

(2) Install a new head cover gasket NO. 2 to the rocker cover LH.

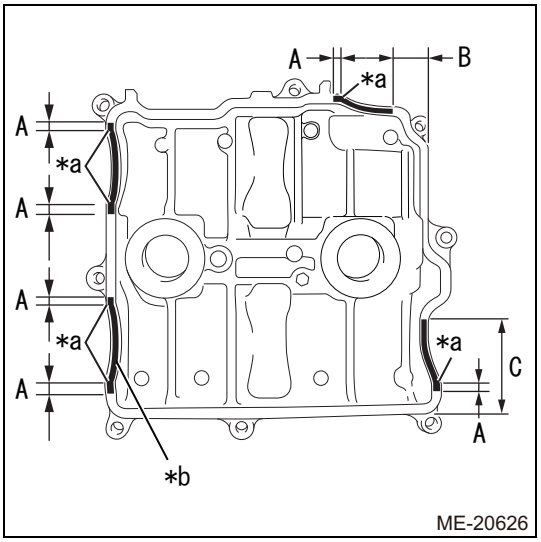

(3) Apply THREE BOND 1217G/1217H or equivalent to the mating surface of rocker cover LH as shown in the figure.

Application area	Application length
A	10.0 mm {0.394 in} or more
B	18.8 mm {0.740 in} or less
C	63.0 mm {2.480 in} or more

Captions in illustration

*a	Arch starting point
*b	Diameter: 2.0 to 4.0 mm {0.079 to 0.158 in}

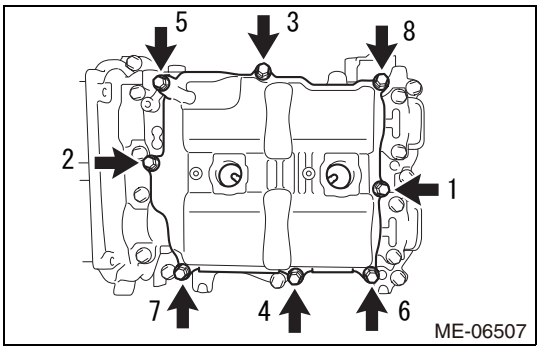

(4) Set the rocker cover LH and tighten the eight bolts in the order as shown in the figure.
Standard value:T=6.4N·m {65kgf·cm} {4.7ft·lbf}

10. Cylinder head gasket installation (Refer to EM - 45)
11. Cylinder head RH installation (Refer to EM - 45)
12. Cam carrier RH installation

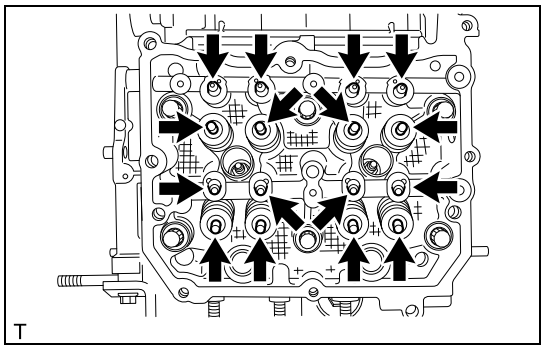

(1) Apply new engine oil to the valve shim and roller rocker arm pivot, and install them to the cylinder head RH.

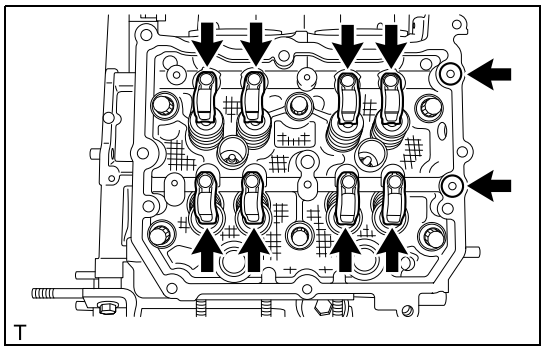

(2) Apply new engine oil to the eight roller rocker arms and two new O-rings, and install them to the cylinder head RH.

(3) Apply THREE BOND 1217G/1217H or equivalent to the mating surface of cam carrier RH as shown in the figure.

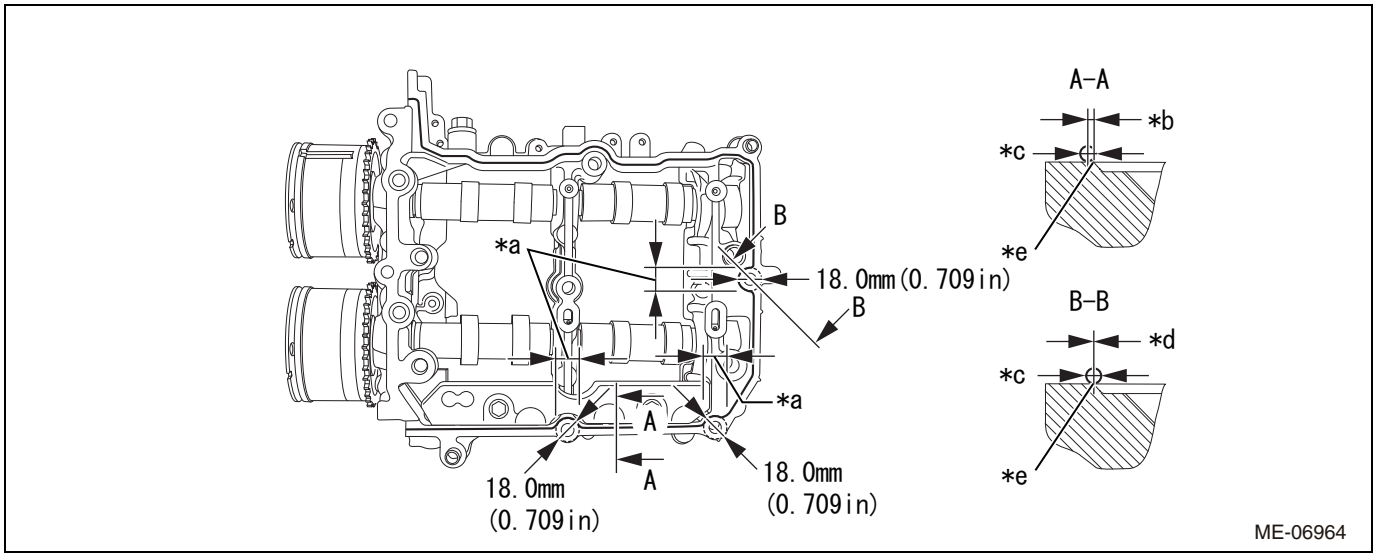

Captions in illustration

*a	Area of B-B	*b	1.0 mm {0.0394 in} or less
*c	Diameter: 2.5 to 3.5 mm {0.098 to 0.138 in}	*d	-0.5 to 0.5 mm {-0.0197 to 0.0197 in}
*e	Groove edge	-	-

CAUTION:
- Clean and degrease the installation surface.
- Do not apply liquid gasket excessively.
- Install within 5 min. after applying liquid gasket.
- Completely remove any liquid gasket that is squeezed out on the installation surface of chain cover.

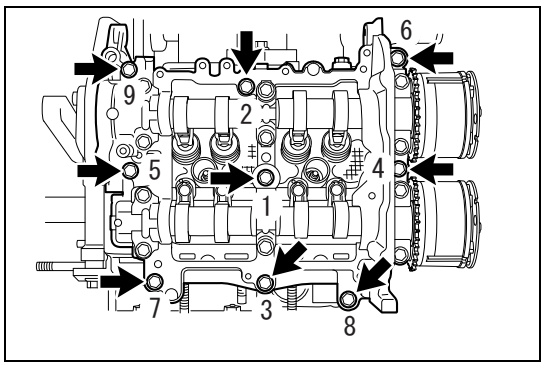

(4) Tighten the 9 bolts in the order as shown in the figure to install the cam carrier RH.
Standard value:T=18N·m {184kgf·cm} {1.3.3 ft·lbf}

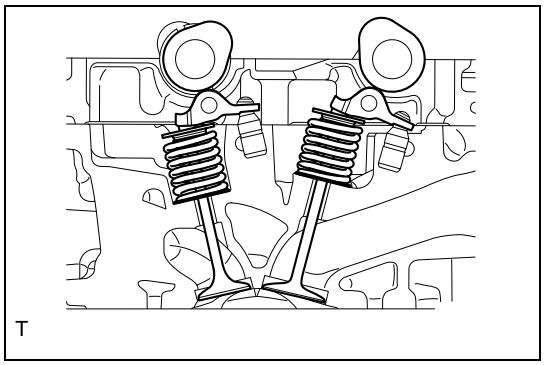
T

NOTE:
Set the intake camshaft RH and exhaust camshaft RH to the zero-lift position.

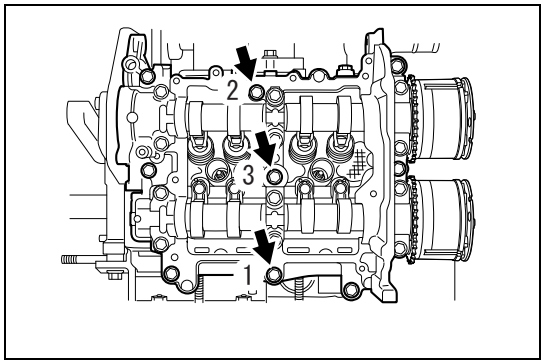

(5) Loosen the three bolts by 180° in the order as shown in the figure.

EM

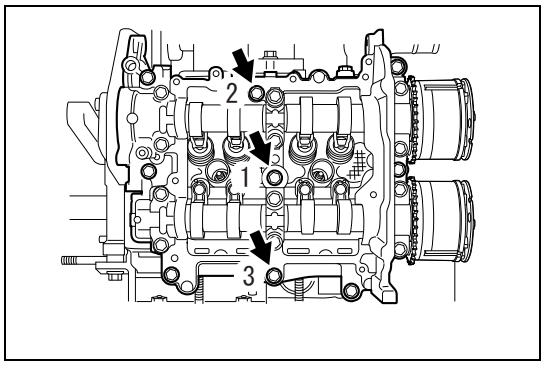

(6) Tighten the three bolts in the order as shown in the figure.
Standard value:T=18N·m {184kgf·cm} {13.3ft·lbf}

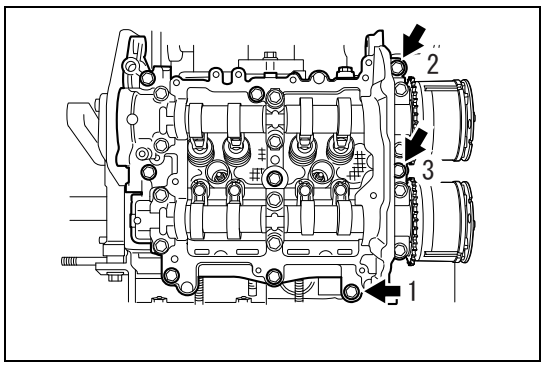

(7) Loosen the three bolts by 180° in the order as shown in the figure.

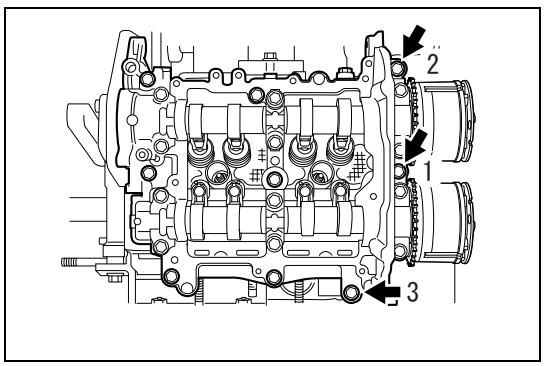

(8) Tighten the three bolts in the order as shown in the figure.
Standard value:T=18N·m {184kgf·cm} {1.3.3 ft·lbf}

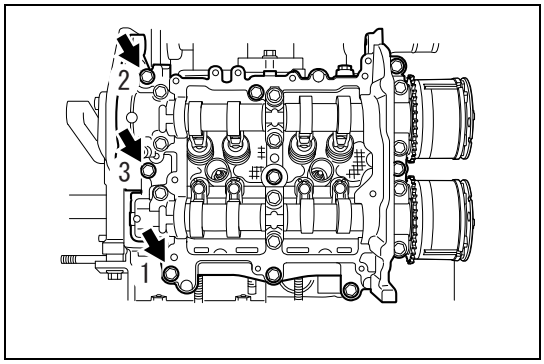

(9) Loosen the three bolts by 180° in the order as shown in the figure.

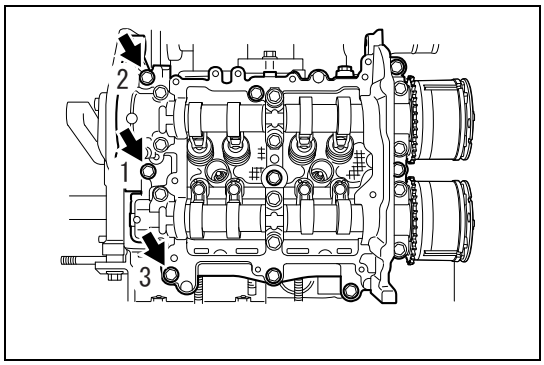

(10) Tighten the three bolts in the order as shown in the figure.
Standard value:T=18N·m {184kgf·cm} {13.3ft·lbf}
NOTE:
After tightening, if the liquid gasket is squeezed out onto the seal surface of chain cover, completely remove any squeezed-out liquid gasket.

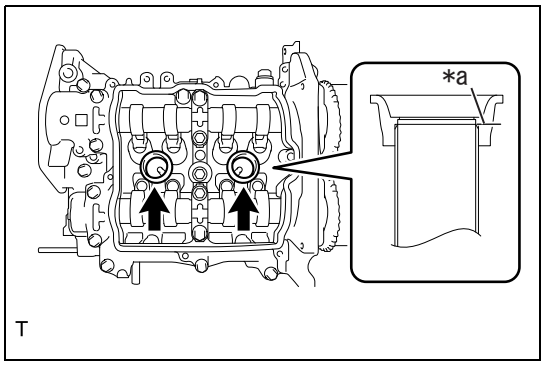

13. Installation of rocker cover RH
(1) Apply a thin coat of new engine oil to two new spark plug pipe gaskets and insert them onto the spark plug pipe edge.

Captions in illustration

*a	Spark plug pipe edge

(2) Install a new rocker cover gasket to the rocker cover RH.

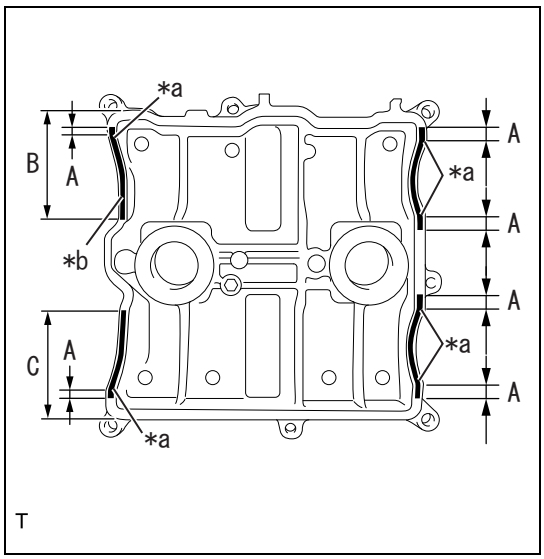

(3) Apply THREE BOND 1217G/1217H or equivalent to the mating surface of rocker cover RH as shown in the figure.

Application area	Application length
A	10.0 mm {0.394 in} or more
B	68.0 mm {2.677 in} or more
C	70.7 mm {2.784 in} or more

Captions in illustration

*a	Arch starting point
*b	Diameter: 2.0 to 4.0 mm {0.079 to 0.158 in}

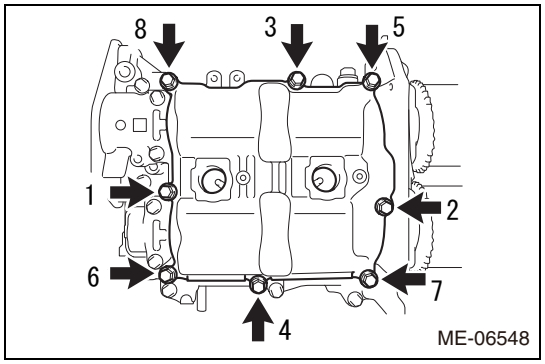

(4) Set the rocker cover RH and tighten the eight bolts in the order as shown in the figure.
Standard value:T=6.4N·m {65kgf·cm} {4.7ft·lbf}

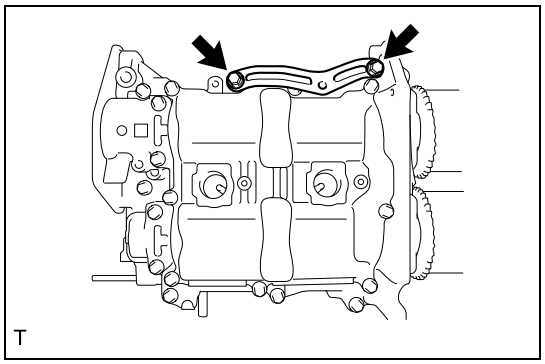

14. Injector driver bracket installation
    (1) Install the injector driver bracket with the two bolts.
    Standard value:T=6.4N·m {65kgf·cm} {4.7ft·lbf}
15. Installation of ignition coil ASSY (bank 1 side)
    (1) Using 2 bolts, install the ignition coil ASSY.
    Standard value:T=8.5N·m {87kgf·cm} {6.3ft·lbf}
    (2) Connect 2 connectors of the ignition coil ASSY.
16. Installation of ignition coil ASSY (bank 2 side)
    (1) Using 2 bolts, install the ignition coil ASSY.
    Standard value:T=8.5N·m {87kgf·cm} {6.3ft·lbf}
    (2) Connect 2 connectors of the ignition coil ASSY.
17. Crankshaft sprocket installation
    (1) Install the crankshaft sprocket.
18. Timing chain installation (bank 2 side) (Refer to EM - 16)
19. Timing chain installation (bank 1 side) (Refer to EM - 18)
20. Chain cover installation (Refer to LU - 25)
21. Chain cover oil seal installation (Refer to EM - 50)
22. Crankshaft pulley installation (Refer to EM - 50)
23. Thermostat installation (Refer to CO - 38)
24. Thermostat cover installation (Refer to CO - 38)
25. Engine water pump ASSY installation (Refer to CO - 20)
26. Water pump pulley installation (Refer to CO - 20)
27. Idler pulley SUB-ASSY NO. 1 installation (Refer to LU - 28)
28. PCV valve installation (Refer to EC - 22)
29. Installation of crankshaft position sensor (Refer to ES - 682)
30. Installation of knock control sensor (Refer to ES - 701)

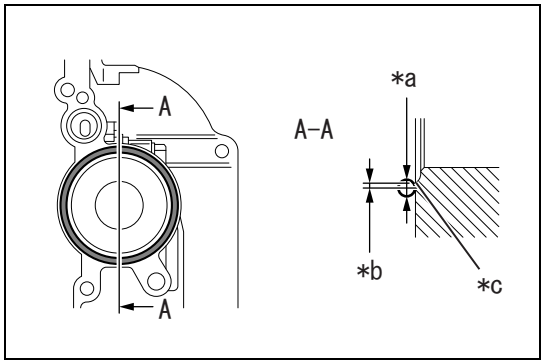

31. Cylinder head plate RR installation (transmission M/T)
    (1) Apply THREE BOND 1217G/1217H or equivalent to the cam carrier RH as shown in the figure.

Captions in illustration

*a	Diameter: 2.0 to 4.0 mm {0.079 to 0.158 in}
*b	1.0 mm {0.0394 in} or less
*c	Groove end

CAUTION:
- Clean and degrease the installation surface.
- Install within 5 min. after applying liquid gasket.

    (2) Install the cylinder head plate with the three bolts.
    Standard value:T=16N·m {163kgf·cm} {11.8ft·lbf}

32. Vacuum pump ASSY installation (transmission A/T) (Refer to BR - 35)
33. Water by-pass pipe NO. 1 installation (transmission M/T)
    (1) Install the water by-pass pipe NO. 1 with the two bolts.
    Standard value:T=6.4N·m {65kgf·cm} {4.7ft·lbf}
    (2) Install the water by-pass hose with the hose clamp.
34. Water by-pass pipe NO. 1 installation (transmission A/T)
    (1) Install the water by-pass pipe NO. 1 with the two bolts.
    Standard value:T=6.4N·m {65kgf·cm} {4.7ft·lbf}
    (2) Install the two water by-pass hoses with the two hose clamps.
35. Water pipe ASSY installation
    (1) Install two new O-rings to the cylinder block.
    (2) Install the water pipe ASSY with the four bolts.
    Standard value:T=6.4N·m {65kgf·cm} {4.7ft·lbf}
    (3) Install the water by-pass hose NO. 3 with the hose clamp.
36. Transmission oil cooler hose NO. 3 installation
    (1) Connect the transmission oil cooler hose NO. 3.
37. Water by-pass hose NO. 2 installation
    (1) Install the water by-pass hose NO. 2 with the hose clamp.
38. PCV hose connector installation
    (1) Install two new O-rings to the PCV hose connector.
    (2) Connect the water by-pass hose NO. 1 to the PCV hose connector and water pipe ASSY with the hose clamps.
    (3) Install the PCV hose connector with the three bolts.
    Standard value:T=6.4N·m {65kgf·cm} {4.7ft·lbf}
39. Ventilation hose NO. 2 installation
    (1) Connect the ventilation hose NO. 2 with the hose clamp.
40. Engine wiring installation
    (1) Confirm the connection of each connector and clamp as shown in the figure.

EM

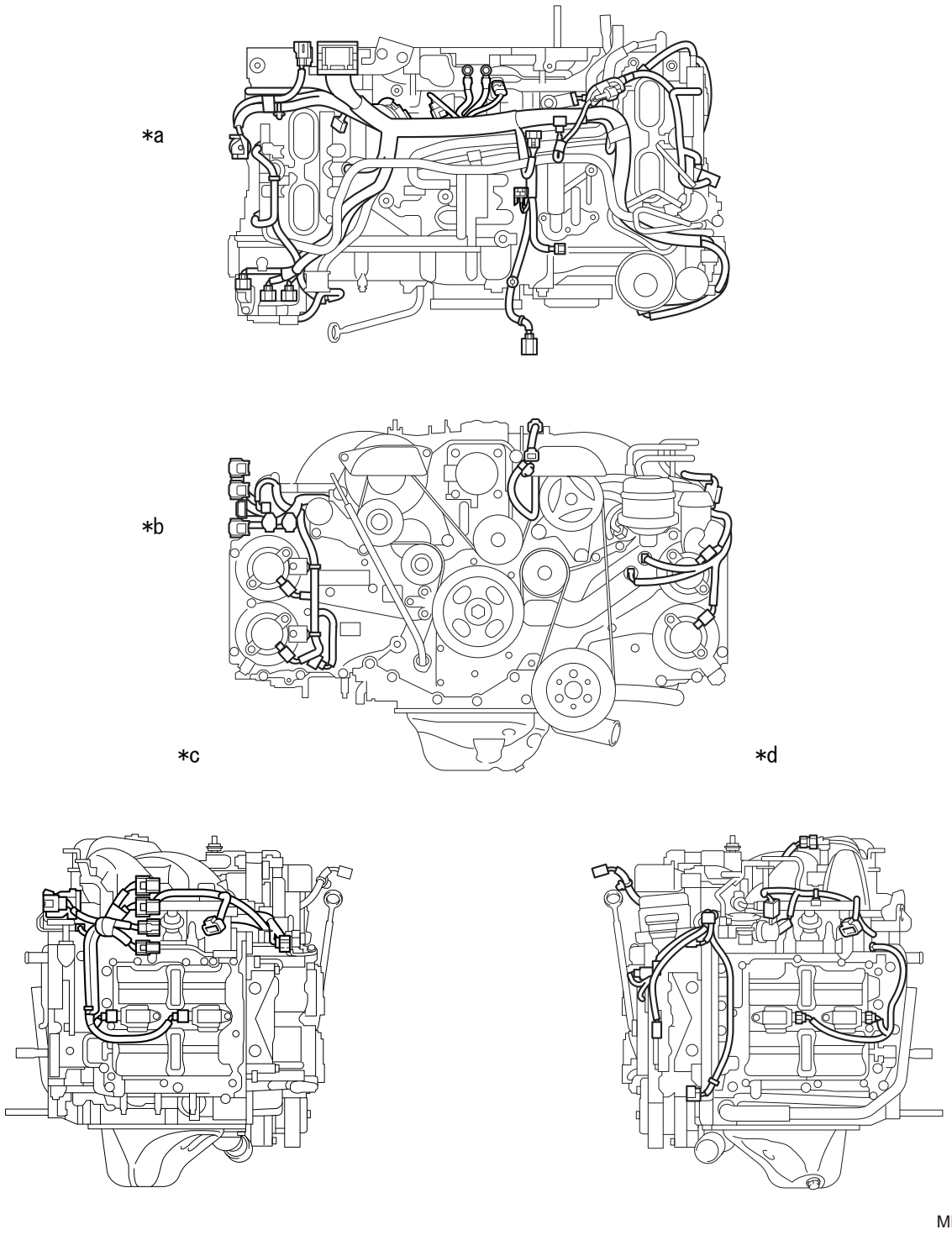

Captions in illustration

*a	Engine top	*b	Engine front
*c	Engine right side	*d	Engine left side

41. Installation of pump drive case ASSY (Refer to FU - 60)
42. Fuel pump lifter installation (Refer to FU - 60)
43. Fuel pump ASSY installation (Refer to FU - 60)
44. Fuel injector seal installation (Refer to FU - 34)
45. Fuel injector ASSY installation (Refer to FU - 36)
46. Fuel delivery pipe (bank 1 side) installation (Refer to FU - 38)
47. Installation of fuel delivery pipe (bank 2 side) (Refer to FU - 38)

48. Fuel delivery pipe installation (Refer to FU - 38)
49. Fuel delivery pipe NO. 2 installation (Refer to FU - 38)
50. Installation of intake manifold (Refer to IE - 28)
51. Installation of compressor ASSY (with magnet clutch) (Refer to AC - 147)
52. V-ribbed belt tensioner ASSY installation (Refer to LU - 28)
53. Oil level gauge guide installation (Refer to LU - 29)
54. Idler pulley SUB-ASSY NO. 2 installation (Refer to LU - 28)
55. Installation of alternator ASSY (Refer to BH - 35)
56. Engine mounting insulator FR installation
    (1) Install the two engine mounting insulators FR with the four bolts.
    Standard value:T=35N·m {357kgf·cm} {25.8ft·lbf}
57. Installation of engine hanger (Refer to EM - 85)
58. Engine stand removal
    (1) Support the engine ASSY with an engine sling device and mini-crane.
    CAUTION:
    Since the operation with the engine ASSY suspended are danger, never perform it other than when installing the ASSY to the engine stand or removing it from the stand.
    (2) Remove the engine ASSY from the engine stand.
59. Crank angle sensor plate installation (Refer to EM - 54)
60. Flywheel SUB-ASSY installation (transmission M/T) (Refer to EM - 54)
61. Clutch disc ASSY installation (transmission M/T) (Refer to CL - 26)
62. Clutch cover ASSY installation (transmission M/T) (Refer to CL - 26)
63. Installation of drive plate & ring gear SUB-ASSY (transmission A/T) (Refer to EM - 55)

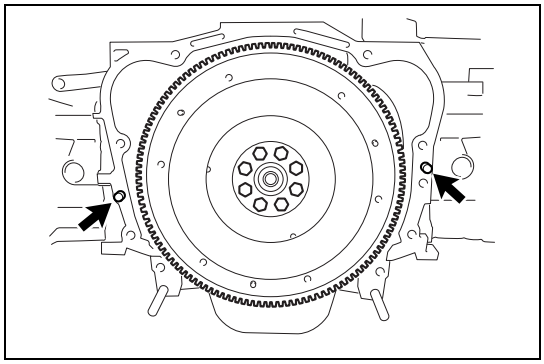

64. Engine ASSY installation
    (1) Make sure that the knock pins are attached to 2 locations on the engine side.
    (2) Align the knock pins to the knock holes by leveling the engine and transmission ASSY using an engine sling device and mini-crane.

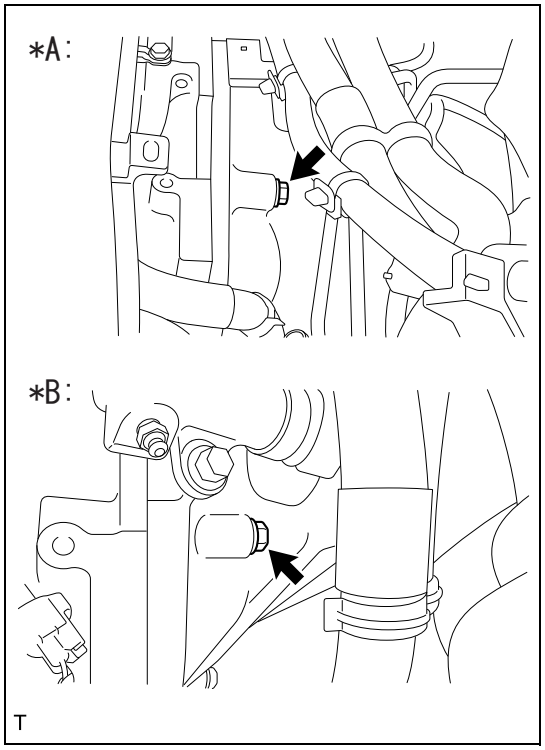

65. Transmission ASSY installation
    (1) Install the connecting bolt of transmission ASSY.

Captions in illustration

*A	Transmission A/T
*B	Transmission M/T

Standard value:T=50N·m {510kgf·cm} {36.9ft·lbf}

(2) Remove the SST. (Transmission A/T)

66. Removal of engine hanger (Refer to EM - 87)

67. Fuel hose and purge hose connection
    (1) Align the alignment marks on purge hose and pipe, and secure them with the hose clump.
    (2) Connect the fuel hose NO. 1 and fuel hose NO. 2.

68. Installation of front crossmember SUB-ASSY
    (1) Using two new nuts, install the front crossmember SUB-ASSY.
    Standard value:T=60N·m {612kgf·cm} {44.2ft·lbf}

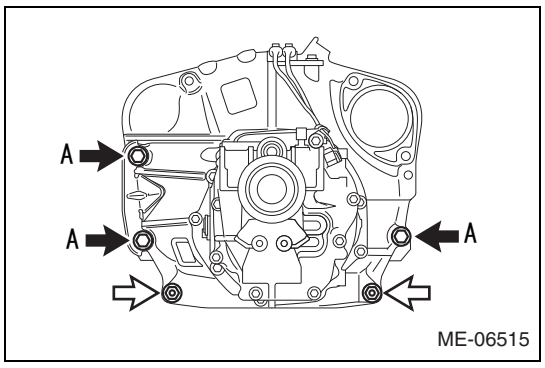

69. Manual transmission ASSY installation (transmission M/T)
    (1) Install the manual transmission ASSY with the three bolts A and two nuts.
    Standard value:T=50N·m {510kgf·cm} {36.9ft·lbf}

Captions in illustration

➡	Bolt
⇨	Nut

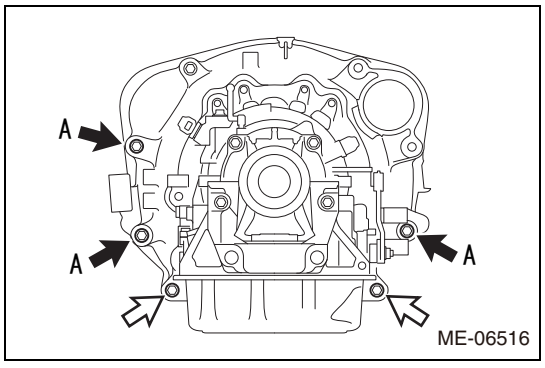

70. Automatic transmission ASSY installation (transmission A/T)
    (1) Install the automatic transmission ASSY with the three bolts A and two nuts.
    Standard value:T=50N·m {510kgf·cm} {36.9ft·lbf}

Captions in illustration

➡	Bolt
⇨	Nut

71. Installation of stabilizer bar FR (transmission A/T) (Refer to FP - 23)

72. Installation of under cover rear LH (with under cover rear LH)
    (1) Install the under cover rear LH with the three bolts and eight clips.
    Standard value:T=7.5N·m {77kgf·cm} {5.5ft·lbf}
73. Ground cable installation
    (1) Install the ground cable with the two bolts.
    Standard value:T=7.5N·m {77kgf·cm} {5.5ft·lbf}
74. SST removal (transmission A/T)
    (1) Remove the SST from the starter hole of torque converter clutch case.
75. Installation of starter ASSY (Refer to ST - 41)
76. Cooler refrigerant discharge hose No. 1 connection (Refer to AC - 147)
77. Suction hose SUB-ASSY installation
    (1) Remove the vinyl tape wrapped around the joint of the suction hose SUB-ASSY.
    (2) Apply sufficient compressor oil to a new O-ring and the fitting area of compressor ASSY (with pulley).
    (3) Install the O-ring to the suction hose SUB-ASSY.
    CAUTION:
    Do not allow dust etc. to adhere to the O-ring and O-ring sealing portion.
    (4) Connect the suction hose SUB-ASSY to the compressor ASSY (with pulley) with the bolt.
    Standard value:T=10N·m {102kgf·cm} {7.4ft·lbf}
    (5) Remove the vinyl tape wrapped on the connection of suction hose SUB-ASSY and unit.
    (6) Apply sufficient compressor oil to a new O-ring and the connection of suction hose SUB-ASSY.
    (7) Install the O-ring to the suction hose SUB-ASSY.
    CAUTION:
    Do not allow dust etc. to adhere to the O-ring and O-ring sealing portion.
    (8) Push the shaft of the pipe joint into the seal hole until it is completely engaged.

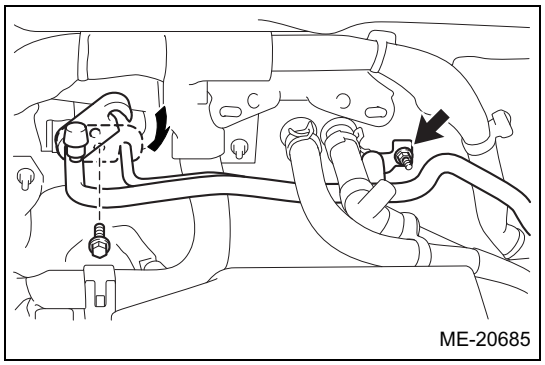
ME-20685

    (9) Turn the hook type connector to the tightening position and tighten it with bolts.
    Standard value:T=7.5N·m {77kgf·cm} {5.5ft·lbf}
    (10) Install the suction hose SUB-ASSY with the nut.
    Standard value:T=10N·m {102kgf·cm} {7.4ft·lbf}
78. Radiator outlet hose connection
    (1) Connect the radiator outlet hose with the hose clamp.
79. Transmission oil cooler hose NO. 1 connection (transmission A/T)
    (1) Connect the transmission oil cooler hose NO. 1 with the hose clamp.
80. Transmission oil cooler hose NO. 3 connection (transmission A/T)
    (1) Connect the transmission oil cooler hose NO. 3 with the hose clamp.
81. Heater water hose connection
    (1) Install the heater water hoses with the two hose clamps.
82. Installation of exhaust manifold (Refer to IE - 36)
83. Vacuum tube connector hose connection (transmission A/T)
    (1) Install the vacuum tube connector hose with the bolt.
    Standard value:T=18N·m {184kgf·cm} {13.3ft·lbf}
    (2) Connect the vacuum tube connector hose with the hose clamp.
84. Vacuum tube connector hose connection (transmission M/T)
    (1) Install the vacuum tube connector hose with the bolt.
    Standard value:T=18N·m {184kgf·cm} {13.3ft·lbf}

(2) Connect the vacuum tube connector hose with the hose clamp.

85. Drive plate & torque converter setting bolt installation (transmission A/T)
    (1) Use the SST to secure the crank pulley.
        SST 18355AA000, 18334AA000
    (2) Install the six drive plate & torque converter setting bolts through the service hole.
        Standard value:T=25N·m {255kgf·cm} {18.4ft·lbf}
86. Flywheel housing under cover installation (transmission A/T)
    (1) Install the flywheel housing under cover.
87. Installation of engine cover SUB-ASSY No. 1 (transmission A/T) (Refer to IE - 28)
88. V-belt installation (Refer to EM - 7)
89. Installation of A/C cover (Refer to EM - 7)
90. Installation of alternator cover (Refer to EM - 8)
91. CONNECT ENGINE WIRE

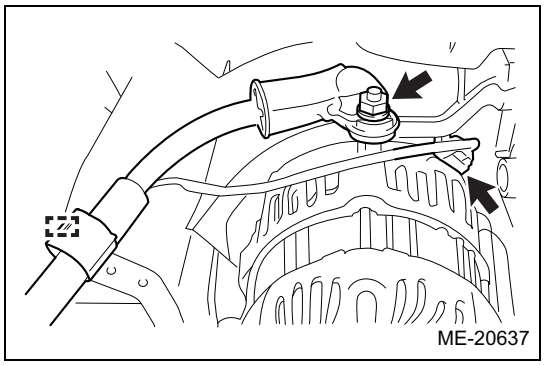

(1) Connect the generator connector and connect the clamp.

(2) Connect the generator wire with the nut.
    Standard value:T=15.5N·m {158kgf·cm} {11.4ft·lbf}
(3) Install the terminal cap.

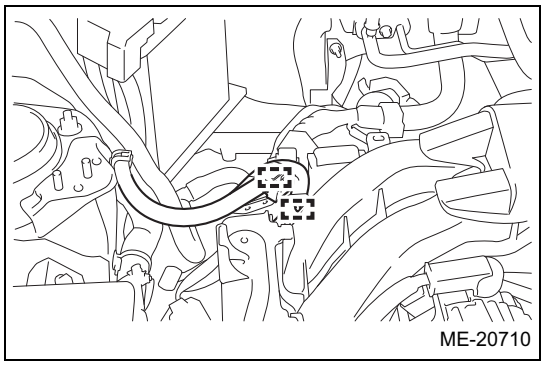

(4) Connect the 2 wire harness clamps

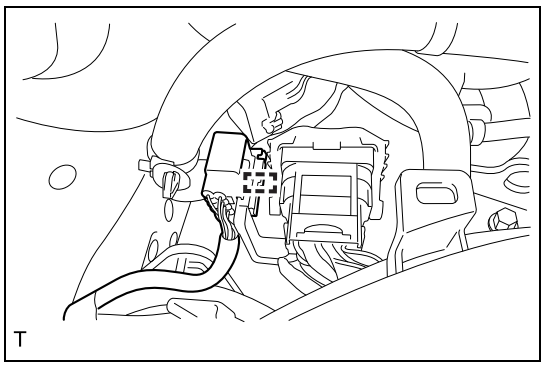

(5) Install the connector to the engine hanger No. 2.

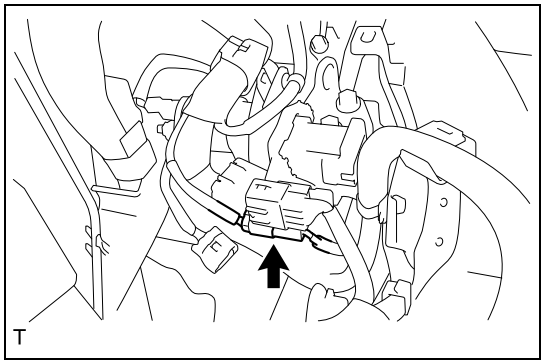

(6) Connect the connector.

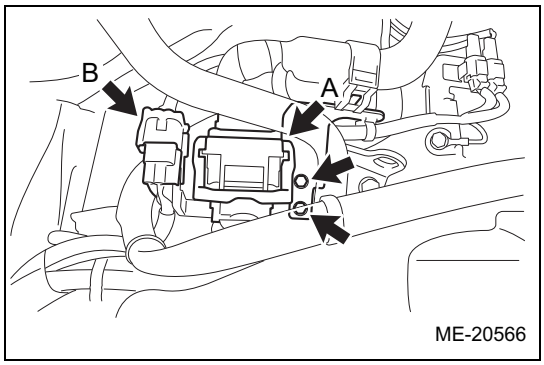

(7) Connect the connector (B).

(8) Connect the wire harness connector (A) and securely lock the connector.

(9) Install the wire harness clamp bracket to the No. 2 engine hanger with the 2 bolts.
Standard value:T=10N·m {102kgf·cm} {7.4ft·lbf}

(10) for Automatic Transmission:

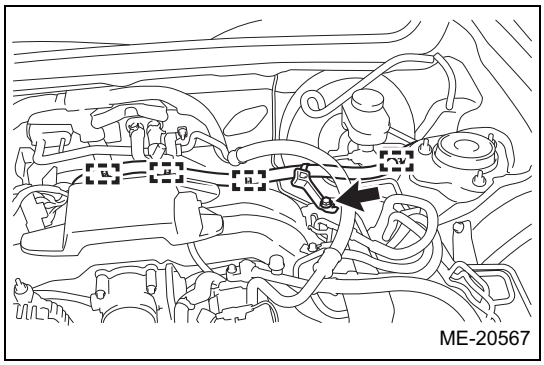

(a) Connect the 4 wire harness clamps.

(b) Install the wiring harness bracket with the bolt.
Standard value:T=11N·m {112kgf·cm} {8.1ft·lbf}

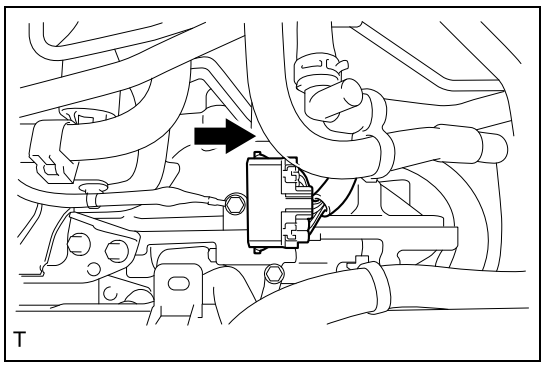

(c) Slide the connector in the direction shown in the diagram, and connect the wire harness.

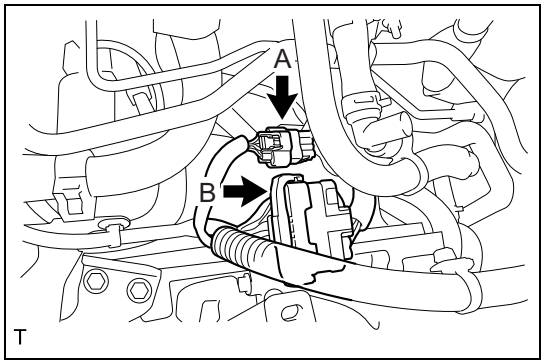

(d)Connect the wire harness connector (A) and securely lock the connector.

(e)Connect the connector (B).

92. Installation of injector driver (Refer to FU - 44)
93. Water filler SUB-ASSY installation
    (1) Install the water filler SUB-ASSY with the two hose clamps.
    (2) Install the water filler SUB-ASSY with the two bolts.
    Standard value:T=7.5N·m {77kgf·cm} {5.5ft·lbf}
94. Radiator reservoir tank ASSY installation (Refer to CO - 31)
95. Air cleaner case SUB-ASSY installation

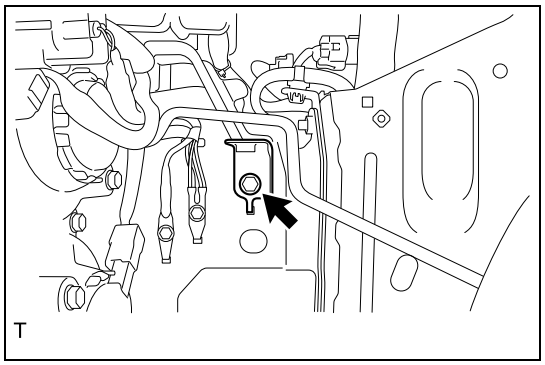

(1) Install the stay with the bolt.
Standard value:T=35N·m {357kgf·cm} {25.8ft·lbf}

(2) Install the air cleaner case SUB-ASSY with the three bolts.
Standard value:T=6.0N·m {61kgf·cm} {4.4ft·lbf}
(3) Tighten the hose clamp.
Standard value:T=2.0N·m {20kgf·cm} {1.5ft·lbf}
(4) Engage the clamp and install the wiring harness to the air cleaner cap.
(5) Connect the connector to the intake air flow meter SUB-ASSY.
(6) Connect the ventilation hose NO. 2 with the hose clamp.
(7) Install the chamber with the two bolts.
Standard value:T=6.0N·m {61kgf·cm} {4.4ft·lbf}
(8) Connect the hose to the chamber ASSY.

96. Installation of front strut tower bar LH (Refer to FP - 5)
97. Installation of flexible V-shaped bar LH (tS model) (Refer to FP - 5)
98. Installation of front strut tower bar RH (Refer to FP - 5)
99. Installation of flexible V-shaped bar RH (tS model) (Refer to FP - 5)
100. Engine oil refill (Refer to LU - 5)
101. Connection of the battery ground terminal
Standard value:T=6.0N·m {61kgf·cm} {4.4ft·lbf}
102. Replenishing of coolant (SUBARU Super Coolant) (Refer to CO - 16)
103. Shift lever position check (transmission A/T) (Refer to AT - 210)
104. Refilling of the refrigerant (Refer to AC - 92)
105. Leak check of coolant (SUBARU Super Coolant) (Refer to CO - 2)
106. Engine oil leakage check (Refer to LU - 6)

107.Fuel leakage check (Refer to FU - 10)
108.Exhaust gas leakage check (Refer to IE - 46)
109.Inspection of refrigerant gas leak (Refer to AC - 93)
110.Throttle body function check (Refer to ES - 667)
111. Ignition timing check (Refer to EM - 2)
112.Idle speed check (Refer to EM - 2)
113.CO, HC concentration check (Refer to EM - 3)
114.Coolant (SUBARU Super Coolant) level check (Refer to CO - 2)
115.Engine oil level check (Refer to LU - 2)
116.Hood SUB-ASSY set
(1) Change the front hood stay position from B to A and store it in the position A.

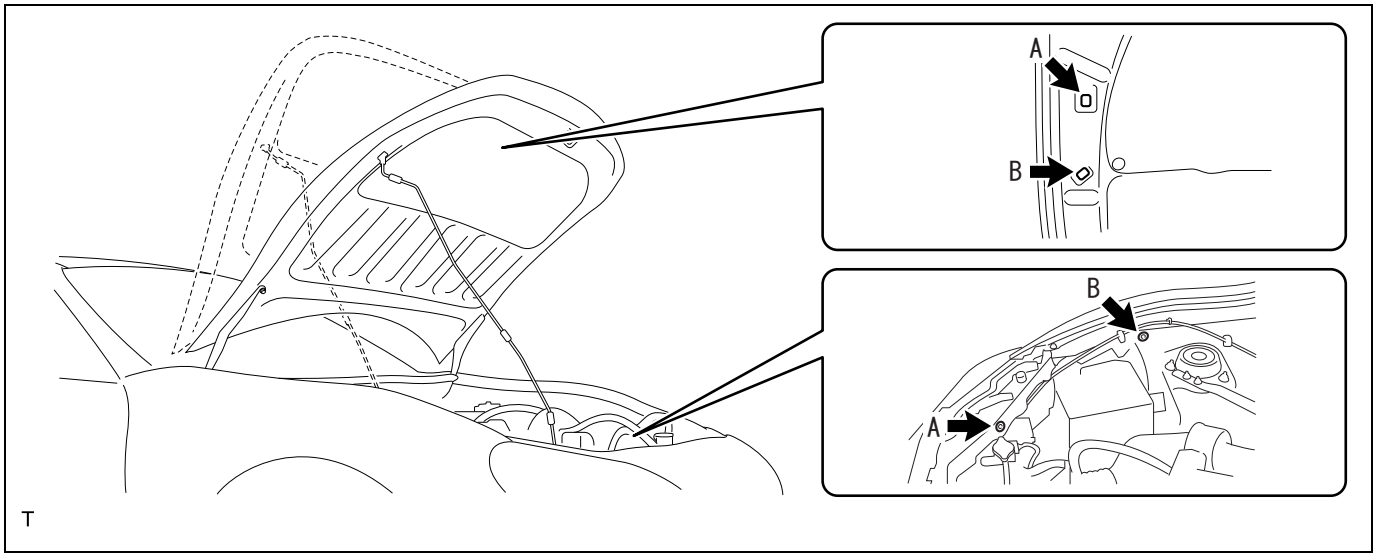

EM

Fuel

Fuel system (FA20)
Precautions FU-3
Function inspection FU-9
Parts location FU-11
Circuit figure FU-13

Injector ASSY (FA20 / port fuel injection)
Exploded view FU-20
Removal FU-21
Installation FU-27
Unit inspection FU-29

Injector ASSY (FA20 / direct fuel injection)
Exploded view FU-30
Removal FU-31
Installation FU-34
Unit inspection FU-39

Fuel pressure sensor (FA20)
Exploded view FU-40
Removal FU-41
Installation FU-41
Unit inspection FU-42

Injector driver (FA20)
Exploded view FU-43
Removal FU-43
Installation FU-44

Fuel pump ASSY (FA20)
Exploded view FU-45
Removal FU-47
Disassembly FU-49
Assembly FU-52
Installation FU-54
Unit inspection FU-56

Fuel pump ASSY (FA20 / high fuel pressure)
Exploded view FU-58
Removal FU-58
Installation FU-60
Unit inspection FU-61

Fuel pump control computer (FA20)
Exploded view FU-62
Removal FU-63
Installation FU-64

Fuel tank ASSY (FA20)
Exploded view FU-65
Removal FU-67
Installation FU-70

Fuel sender gauge ASSY (FA20)
Exploded view FU-74
Removal FU-75
Installation FU-77
Unit inspection FU-79

Filler pipe (FA20)
Exploded view FU-81
Removal FU-81
Installation FU-83
On-vehicle inspection FU-84

Fuel system (FA20)

Precautions

1. Precautions before work
   (1) Before performing the work related to the fuel system, perform the fuel spill prevention procedure and disconnect the negative terminal from the battery. (Refer to FU - 3)
   (2) Be sure not to perform the work related to the fuel system near open flames. Also be sure not to smoke during the work.
   (3) Keep rubber and leather parts away from gasoline.
2. Fuel spill prevention procedure
   CAUTION:
   - Perform this procedure when the engine coolant temperature is 60°C {140°F} or less.
   - Always perform the fuel spill prevention procedure before removing the fuel system parts.
   - Since a small amount of residue pressure exists in the fuel line after the fuel spill prevention procedure, prevent the fuel from splashing when disconnecting the fuel line.

   (1) Remove the relay block cover UPR.

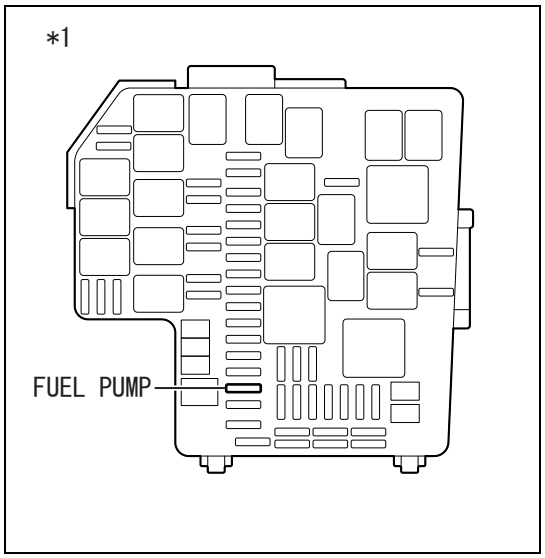

   (2) Remove the fuel pump fuse from the engine compartment relay block.

Captions in illustration

*1	Engine compartment relay block

   (3) Start the engine.
   (4) Turn the ignition to OFF after the engine stalls by itself.
   (5) Crank the engine again and check that it does not start.
   NOTE:
   Since a diagnostic code may be detected, check/clear the diagnostic code after the work is completed. (Refer to ES - 28)
   (6) Remove the fuel tank cap to release the pressure in the fuel tank.
   (7) Disconnect the battery ground terminal. (Refer to IN - 6)
   (8) Install the fuel pump fuse.
   (9) Install the relay block cover UPR.

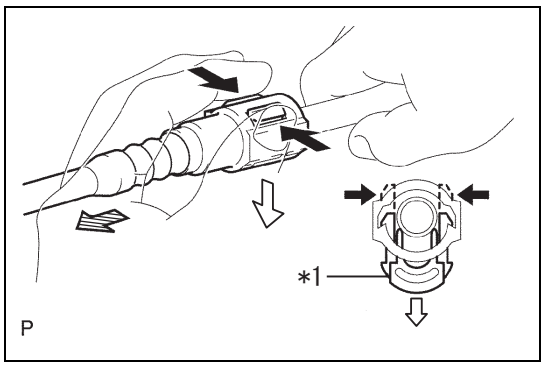

3. Fuel system (quick type A)
   (1) When disconnecting the fuel tube connector (quick type A), adhere to the following precautions.
   (a)Release the two claws in the retainer of fuel tube connector and push down the retainer as shown in the figure to disconnect the fuel tube connector from the pipe.

Captions in illustration

*1	Retainer
➡	Push

⇨	Lower
⇛	Pull

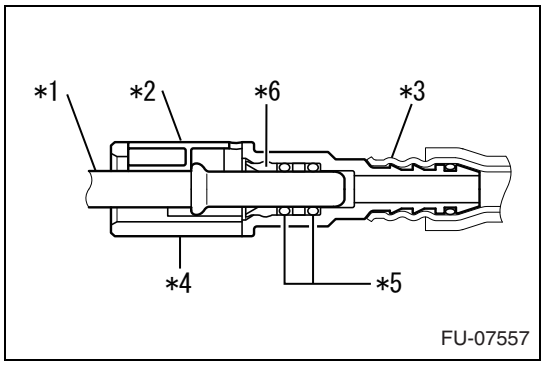

(b)If the fuel tube connector is seized on the pipe, hold the pipe and push/pull the fuel tube connector to release it, and then disconnect the fuel tube connector.

CAUTION:

- Before starting the work, remove the foreign matters such as dirt on the fuel tube connector.
- Since the fuel tube connector seals the fuel tube connector and pipe with the O-ring, pay special attention to the damage and foreign matters on the connection.
- Never use any tools.
- After the fuel tube is disconnected, protect the connection with a vinyl bag.
- If the fuel tube connector is seized on the pipe, push and pull the fuel tube connector to release it, and then pull out it.

Captions in illustration

*1	Pipe
*2	Retainer
*3	Nylon tube
*4	Fuel tube connector
*5	O-ring
*6	Top hat

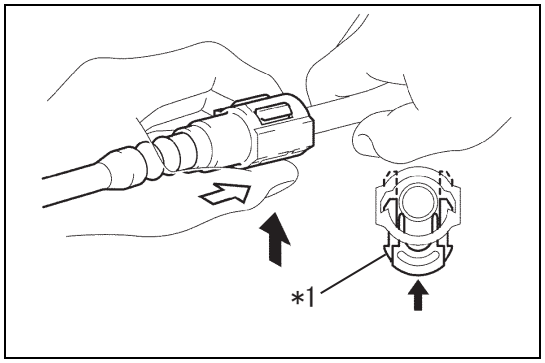

(2) When connecting the fuel tube connector (quick type A), adhere to the following precautions.

(a)Align the axis of fuel tube connector and the axis of pipe, then push in the fuel tube connector and push up the retainer.

Captions in illustration

*1	Retainer
➡	Push up
⇨	Push

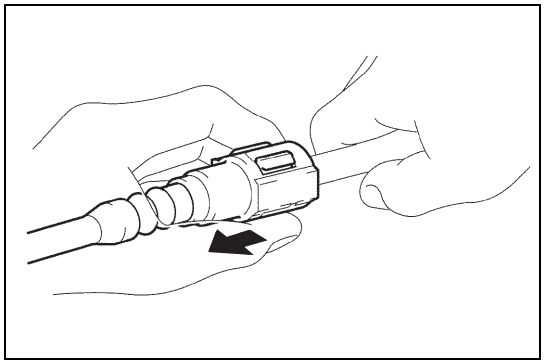

(b)After the fuel tube connector is connected, pull the fuel tube connector and pipe to ensure they are connected securely.

Captions in illustration

➡	Pull

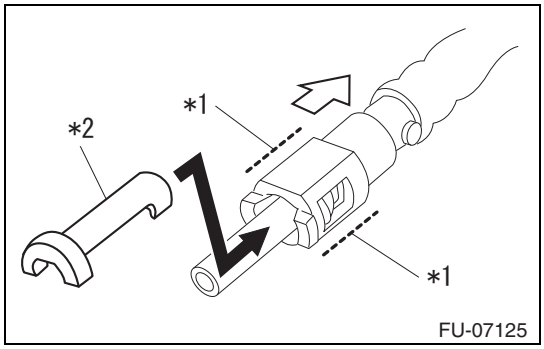

4. Fuel system (quick type B)
   (1) When disconnecting the fuel tube connector (quick type B) using the SST, adhere to the following precautions.
   (a) Before disconnecting the fuel tube connector, check the fuel tube connector and pipe for dirt or dust. If dirt or dust is found, clean them.
   (b) Attach the SST to the pipe. Push in the SST to disconnect the fuel tube connector from the pipe.
   SST 42099AE000

Captions in illustration

*1	Holding portion
*2	SST
➡	Push
⇨	Pull

CAUTION:
- Hold the holding portion of the connector to pull out it in axial direction.
- If the fuel tube connector is seized on the pipe, push and pull the fuel tube connector to release it with the SST pushed in, and then pull out fuel tube connector.
- When disconnecting the connector, do not bend or twist the fuel tube forcibly. If the tube is bent, replace with a new part.
- Catch the fuel from the tube using a container to prevent it from splashing.

   (c) After disconnecting the fuel tube, check the seal surface of pipe for dirt or dust.
   (d) Make sure that the top hat or O-ring does not fall off.
   (e) Protect the disconnected fuel tube connector and pipe with vinyl bags.

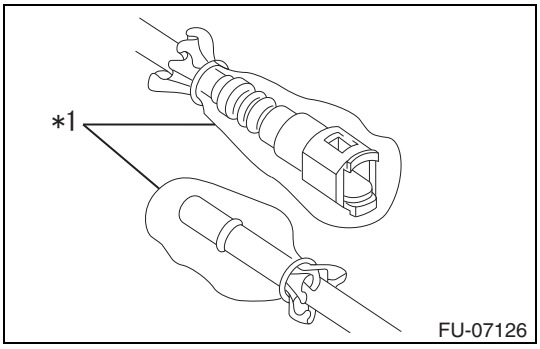

Captions in illustration

*1	Vinyl bag

CAUTION:
- When reusing the retainer, do not remove the retainer from the connector.
- Do not damage the fuel tube connector and pipe or allow foreign matter to enter the pipe.

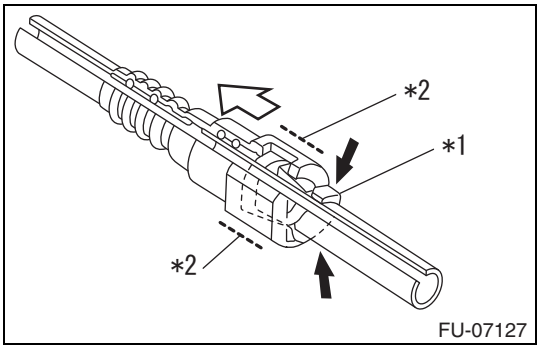

   (2) When disconnecting the fuel tube connector (quick type B) without the SST, adhere to the following precautions.
   (a) Before disconnecting the fuel tube connector, check the fuel tube connector and pipe for dirt or dust. If dirt or dust is found, clean them.
   (b) Push the retainer in the direction of the arrow, disconnect the fuel tube connector from pipe.

Captions in illustration

*1	Retainer
*2	Holding portion

FU

➡	Push
⇨	Pull

CAUTION:
- Hold the holding portion of the connector to pull out it in axial direction.
- If the fuel tube connector is seized on the pipe, push and pull the fuel tube connector to release it with the retainer pushed in, and then pull out fuel tube connector.
- When disconnecting the connector, do not bend or twist the fuel tube forcibly. If the tube is bent, replace with a new part.
- Catch the fuel from the tube using a container to prevent it from splashing.

(c) After disconnecting the fuel tube, check the seal surface of pipe for dirt or dust.

(d) Make sure that the top hat or O-ring does not fall off.

(e) Protect the disconnected fuel tube connector and pipe with vinyl bags.

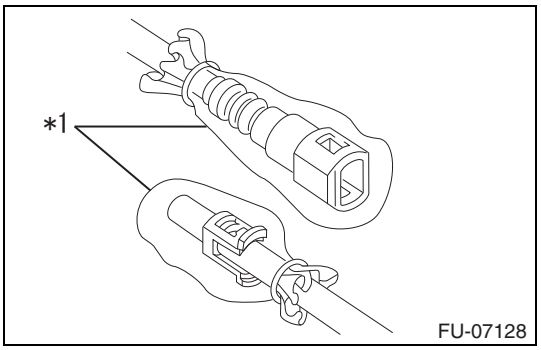

Captions in illustration

*1	Vinyl bag

CAUTION:
- When reusing the retainer, do not remove the retainer from the pipe.
- Do not damage the fuel tube connector and pipe or allow foreign matter to enter the pipe.

(3) When connecting the fuel tube connector (quick type B), adhere to the following precautions.

(a) Make sure there are no damage or dust on connections. If necessary, clean the seal surface of pipe.

(b) When reusing the retainer, make sure that neither damage nor deformation exist on the retainer. If it is faulty, replace it with a new retainer.

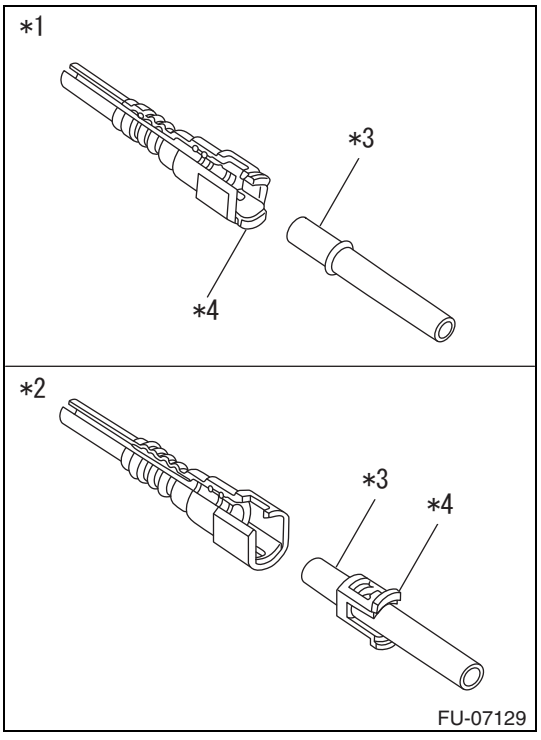

Captions in illustration

*1	When disconnected with the SST
*2	When disconnected without the SST
*3	Seal surface
*4	Retainer

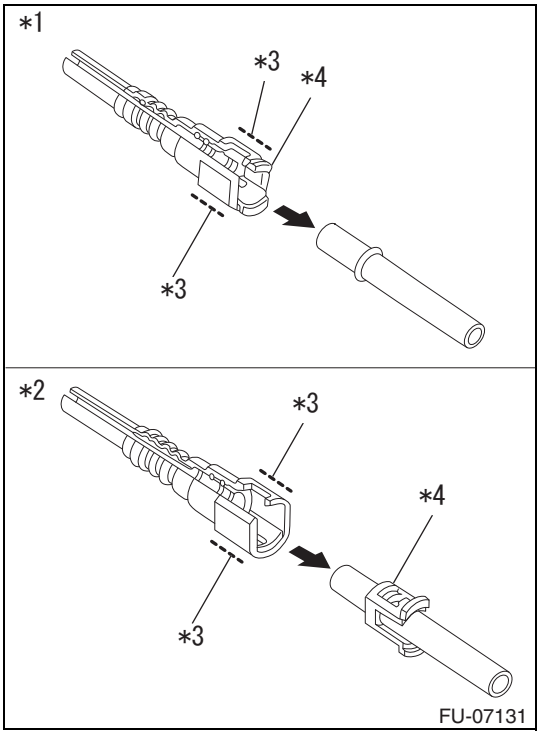

(c) Align the axis of fuel tube connector and the axis of pipe, push in the fuel tube connector until a clicking sound is heard from the retainer.

Captions in illustration

*1	When disconnected with the SST
*2	When disconnected without the SST
*3	Holding portion
*4	Retainer

CAUTION:

- Hold the holding portion of the connector to push in it in axial direction.
- When connecting the connector, do not bend or twist the fuel tube forcibly. If the tube is bent, replace with a new part.

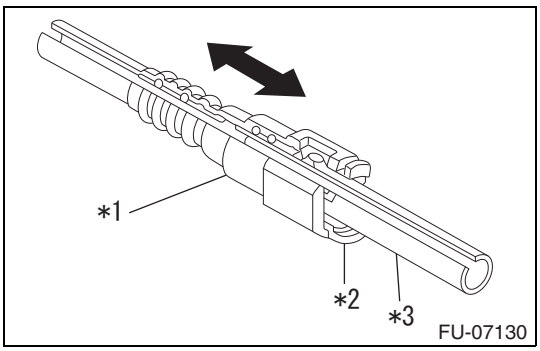

(d) After the fuel tube connector is connected, make sure that the fuel tube connector and pipe are connected securely.

Captions in illustration

*1	Fuel tube connector
*2	Retainer
*3	Pipe

CAUTION:

- Make sure that the two retainer pawls are engaged in their mating positions in the quick connector.
- Make sure that there are no fuel leakages from the fuel tube and its connection.

5. Fuel system (quick type C)
   (1) When disconnecting a fuel pressure line, a large amount of gasoline will spill out. Perform the following procedure:
   (a) Discharge fuel system pressure.
   (b) Put a container under the connection.
   (c) Disconnect the fuel pump tube.
   (d) Drain the fuel remaining inside the fuel pump tube into the container.
   (e) Cover the disconnected pipe and connector with a plastic bag to prevent damage and contamination.

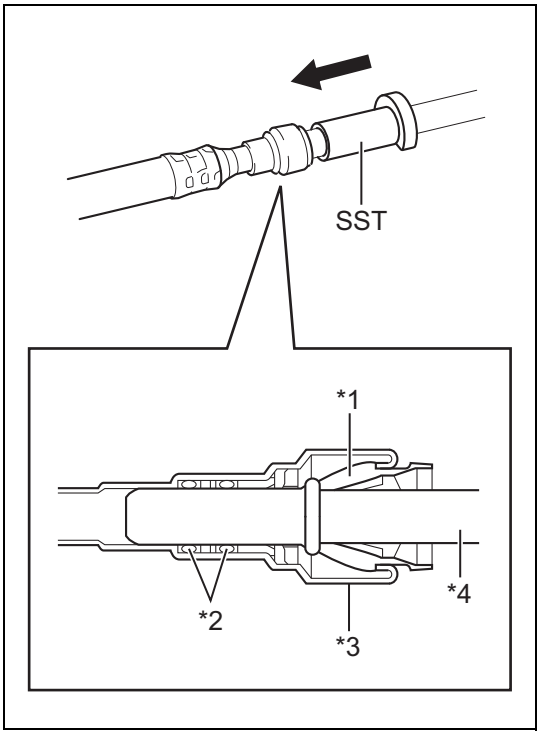

(2) Observe these precautions when connecting the fuel tube connector .

(a) Attach SST to the fuel pipe.

SST 42099AE000

(b) Insert SST in the fuel tube connector side, and remove the fuel tube from the fuel pipe.

Captions in illustration

*1	Retainer
*2	O-Ring
*3	Housing
*4	Fuel Pipe
➡	Insert

(c) Cover the disconnected fuel pipe and fuel tube connector with plastic bags to prevent damage and contamination.

(3) Observe these precautions when connecting the fuel tube connector.

(a) Check for damage or foreign matter on the connected part of the fuel pipe.

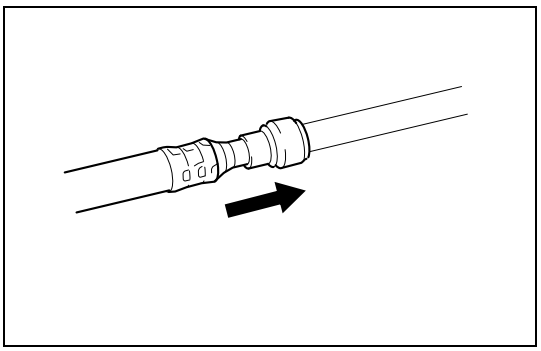

(b) Align the fuel tube connector axis with the fuel pipe axis, and push the fuel tube connector in until the retainer makes a clicking sound.

Captions in illustration

➡	Push

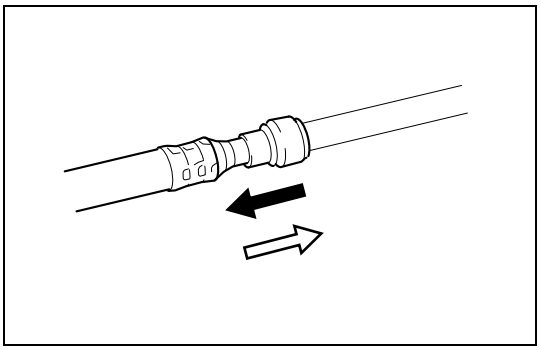

(c) After connecting the fuel tube connector, pull the fuel tube connector and pipe, and then push them to check that they are connected firmly.

NOTE:

Be sure to always finish checking the fuel pipe connections by pushing.

Captions in illustration

➡	Pull
⇨	Push

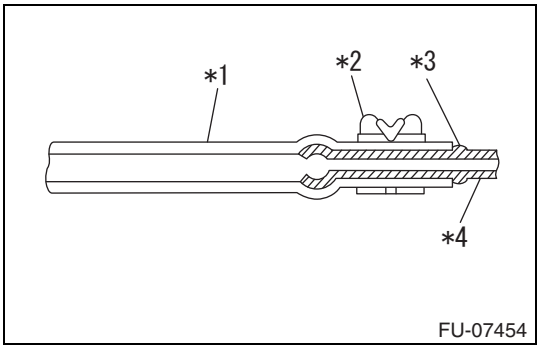

6. Fuel system (evaporation hose connection)
   (1) Connect the evaporation hose as shown in the figure.

Captions in illustration

*1	Hose
*2	Clip
*3	Spool or stopper
*4	Pipe

CAUTION:
If there is no spool or stopper, connect the hose by inserting it into the pipe by 15 to 20 mm {0.591 to 0.787 in}.

Function inspection

1. Fuel pressure check (low-pressure side)
   (1) Fuel pressure gauge installation (port injection side)
      (a)Perform the fuel spill prevention procedure. (Refer to FU - 3)
         CAUTION:
         Since a small amount of residue pressure exists in the fuel line after the fuel spill prevention procedure, prevent the fuel from splashing when disconnecting the fuel line.

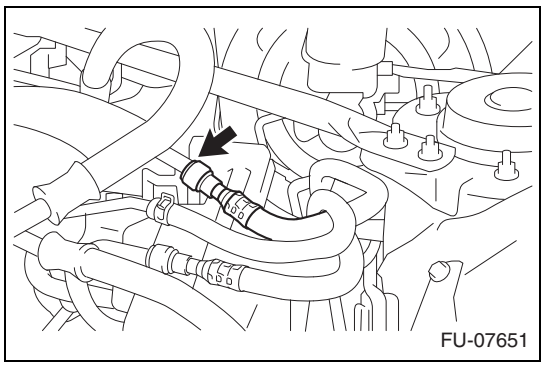

      (b)Disconnect the fuel hose NO.1 with the SST.
         SST 42099AE000
      (c)Install the fuel pressure gauge to the vehicle.
      (d)Wipe off any spilt fuel.
   (2) Fuel pressure gauge installation (cylinder injection side)
      (a)Perform the fuel spill prevention procedure. (Refer to FU - 3)
         CAUTION:
         Since a small amount of residue pressure exists in the fuel line after the fuel spill prevention procedure, prevent the fuel from splashing when disconnecting the fuel line.

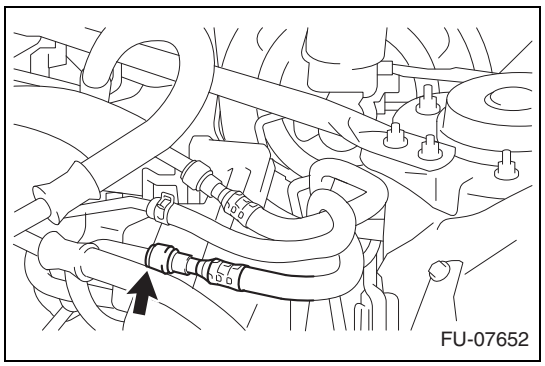

      (b)Disconnect the fuel hose NO.2 with the SST.
         SST 42099AE000
      (c)Install the fuel pressure gauge to the vehicle.
      (d)Wipe off any spilt gasoline.
   (3) Fuel pressure check
      (a)Measure the fuel pressure while engine idling after warming up the engine.
         Standard value: 350 to 500 kPa {3.6 to 5.1 kgf/cm^2} {51 to 72 psi}
   (4) Perform the fuel spill prevention procedure. (Refer to FU - 3)
   (5) Fuel pressure gauge removal

FU

(a)Be careful not to splash gasoline and remove the fuel pressure gauge.
(b)Connect the fuel hoses NO. 1 and NO. 2.

2. Fuel pressure check (high pressure side)
   (1) Connect the SSM4 to the DLC.
   (2) Turn the ignition switch to ON.
   (3) Start the engine and check the value in 'Data monitor'→'Fuel pressure' at idling.
   Standard value: 3.5 to 4.5 MPa {35.7 to 45.9 kgf/cm^2} {507.5 to 652.5 psi}
3. D-4S inspection (power balance) active test
   (1) Connect the SSM4 to the DLC.
   (2) Start the engine, select 'active test'→'D-4S (power balance)' according to the screen display, and select 'port' or 'cylinder'.
   (3) Check the idle state after the injection to the executed cylinder of [#1 to #4] is stopped.
   Criteria: The idle speed shall vary.
   CAUTION:
   Only one cylinder can be tested at a time and multiple cylinders shall not be tested.
4. Fuel leakage check
   (1) Make sure that there are no fuel leakages from the fuel system with the fuel pressure.

Parts location

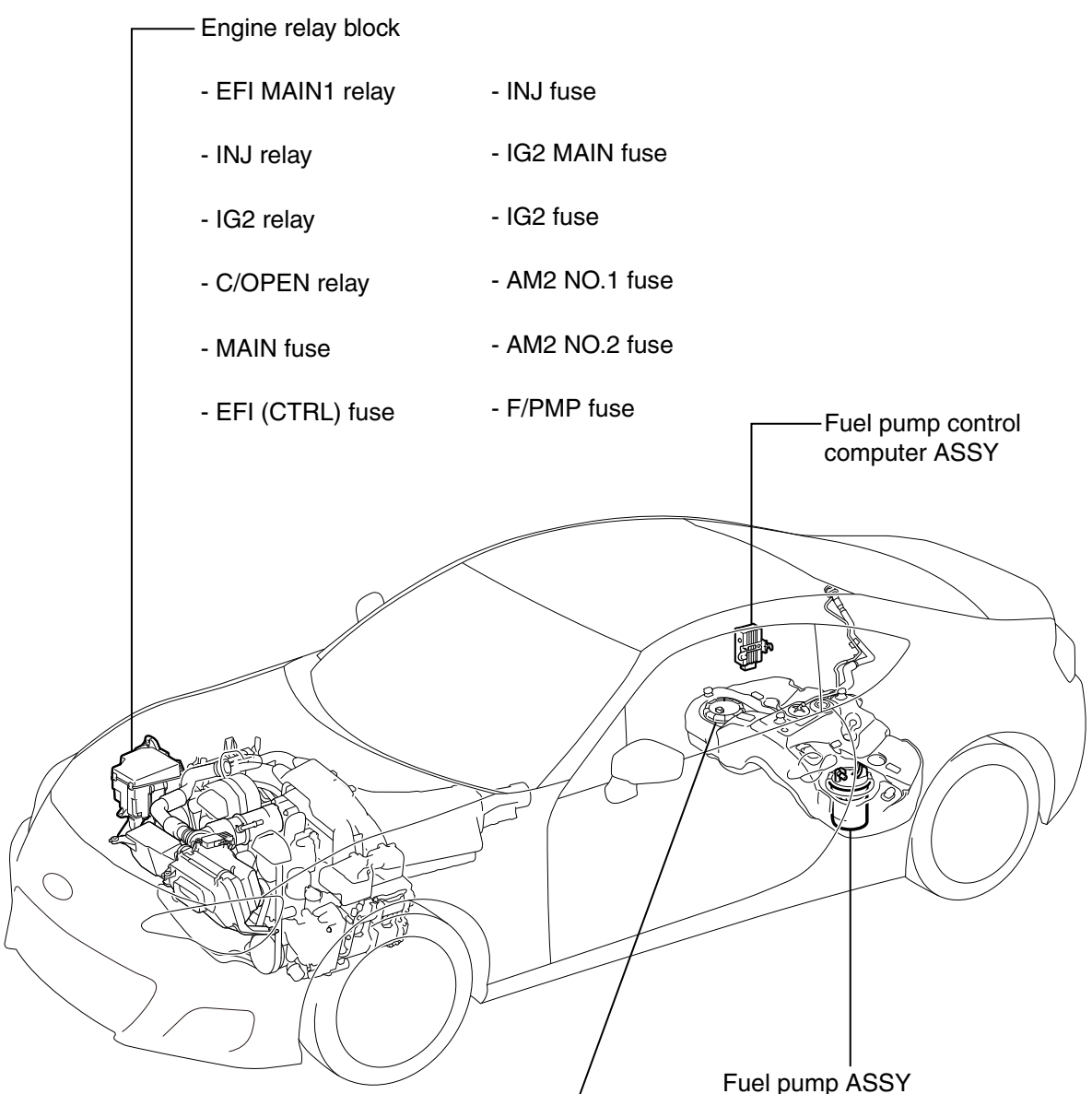

FU

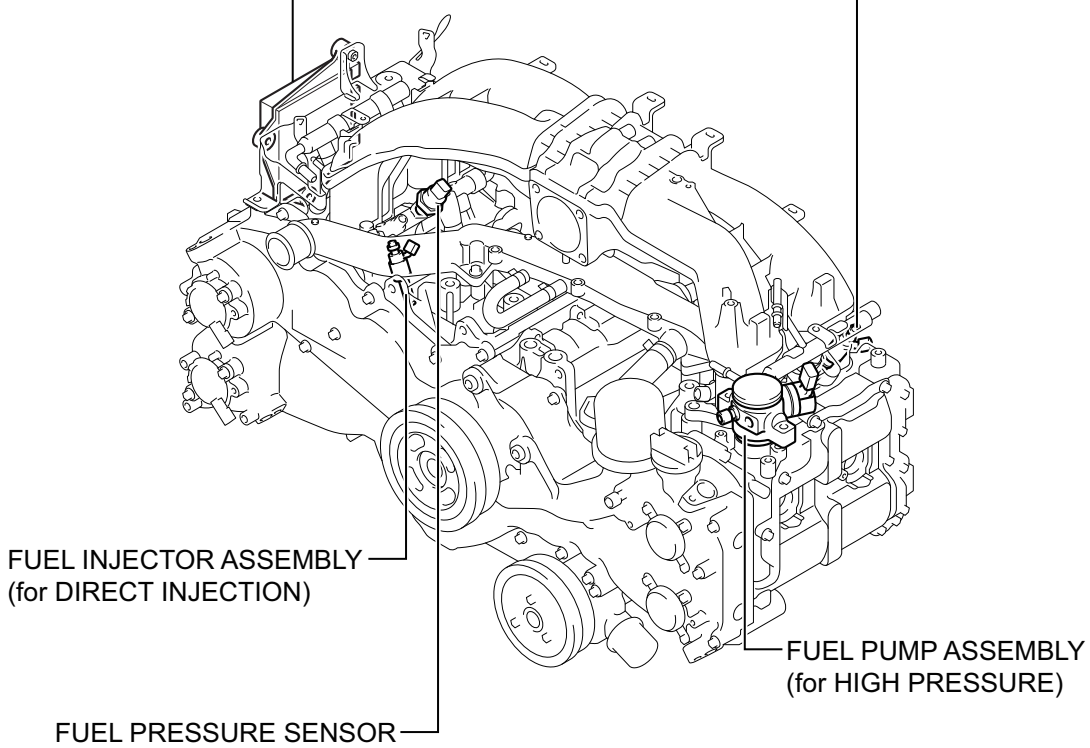
FUEL INJECTOR ASSEMBLY
(for PORT INJECTION)
INJECTOR DRIVER
FUEL INJECTOR ASSEMBLY
(for DIRECT INJECTION)
FUEL PUMP ASSEMBLY
(for HIGH PRESSURE)
FUEL PRESSURE SENSOR

FU-20173

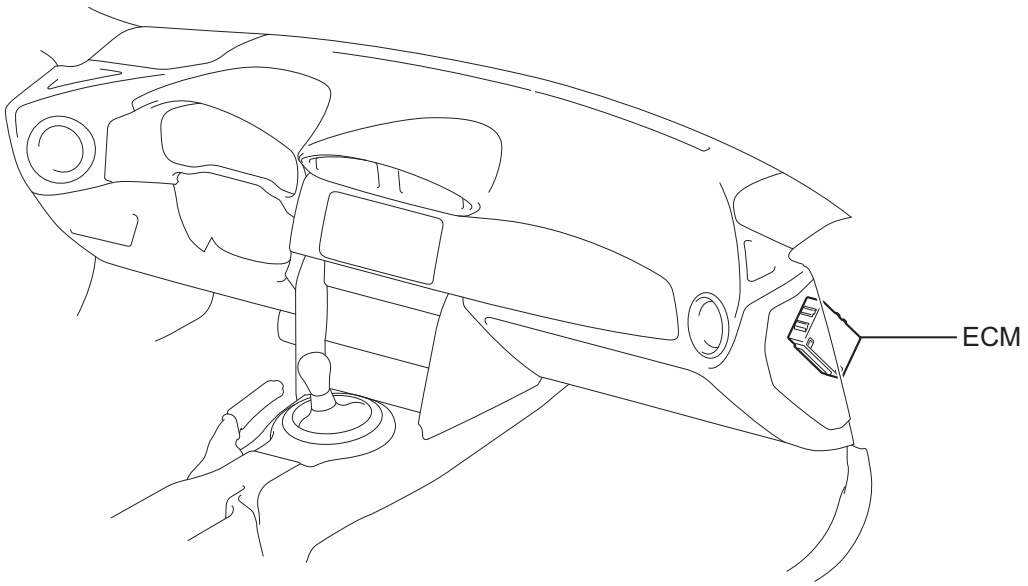
ECM

Circuit figure

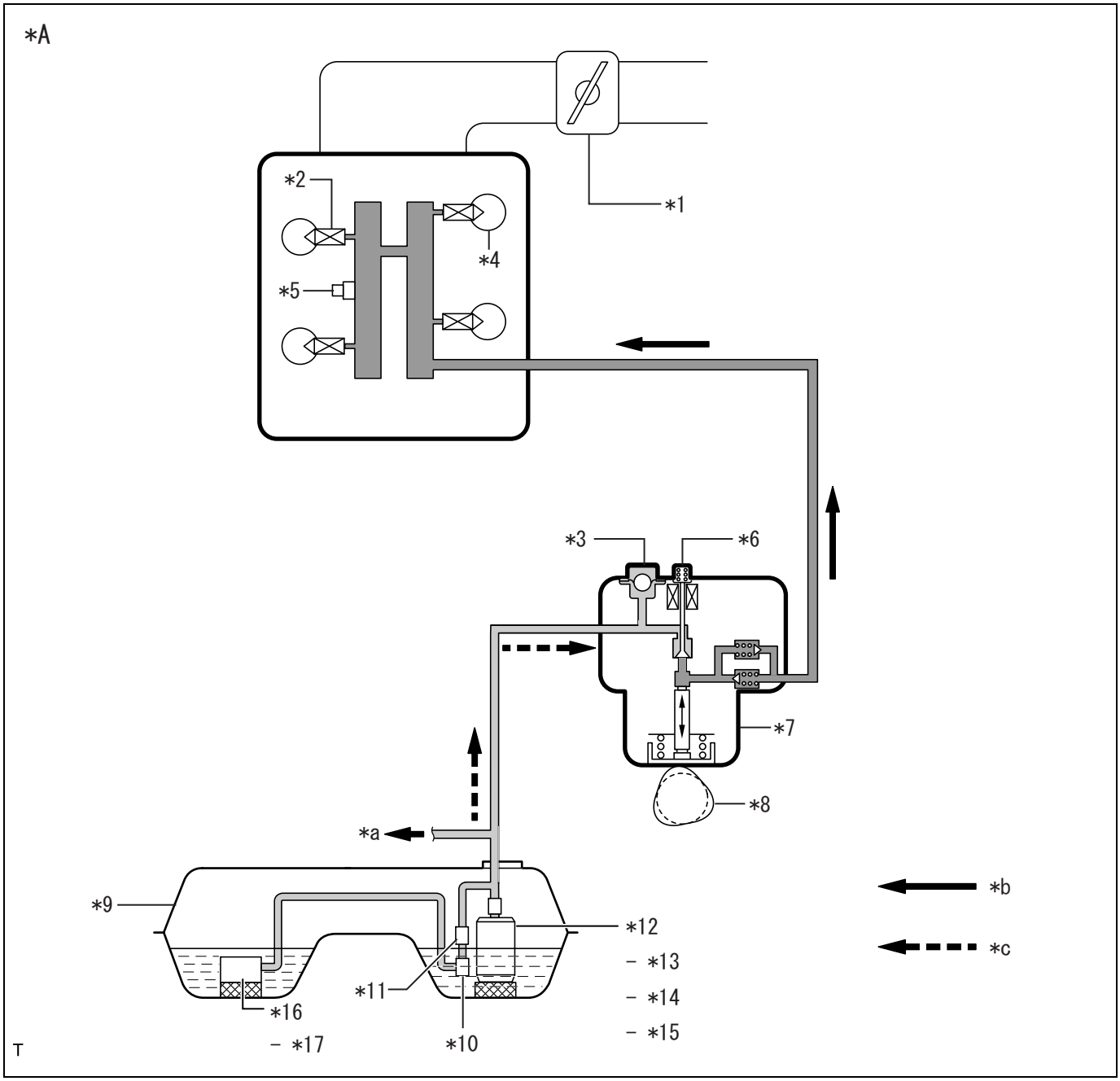

Captions in illustration

*A	Direct injection side	-	-
*1	Throttle body ASSY	*2	Fuel injector ASSY
*3	Fuel pressure pulsation damper ASSY	*4	Cylinder
*5	Fuel pressure sensor	*6	Spill valve solenoid
*7	Fuel pump ASSY (High pressure side)	*8	Camshaft
*9	Fuel tank ASSY	*10	Jet pump
*11	Fuel pressure regulator	*12	Fuel pump ASSY
*13	Fuel sender gauge ASSY (Fuel sender gauge main)	*14	Fuel pump
*15	Fuel filter	*16	Fuel sub sender gauge ASSY
*17	Fuel sender gauge ASSY NO.2 (Fuel sender gauge sub)	-	-
*a	To fuel injector (Port injection side)	*b	High pressure side fuel line
*c	Low pressure side fuel line	-	-

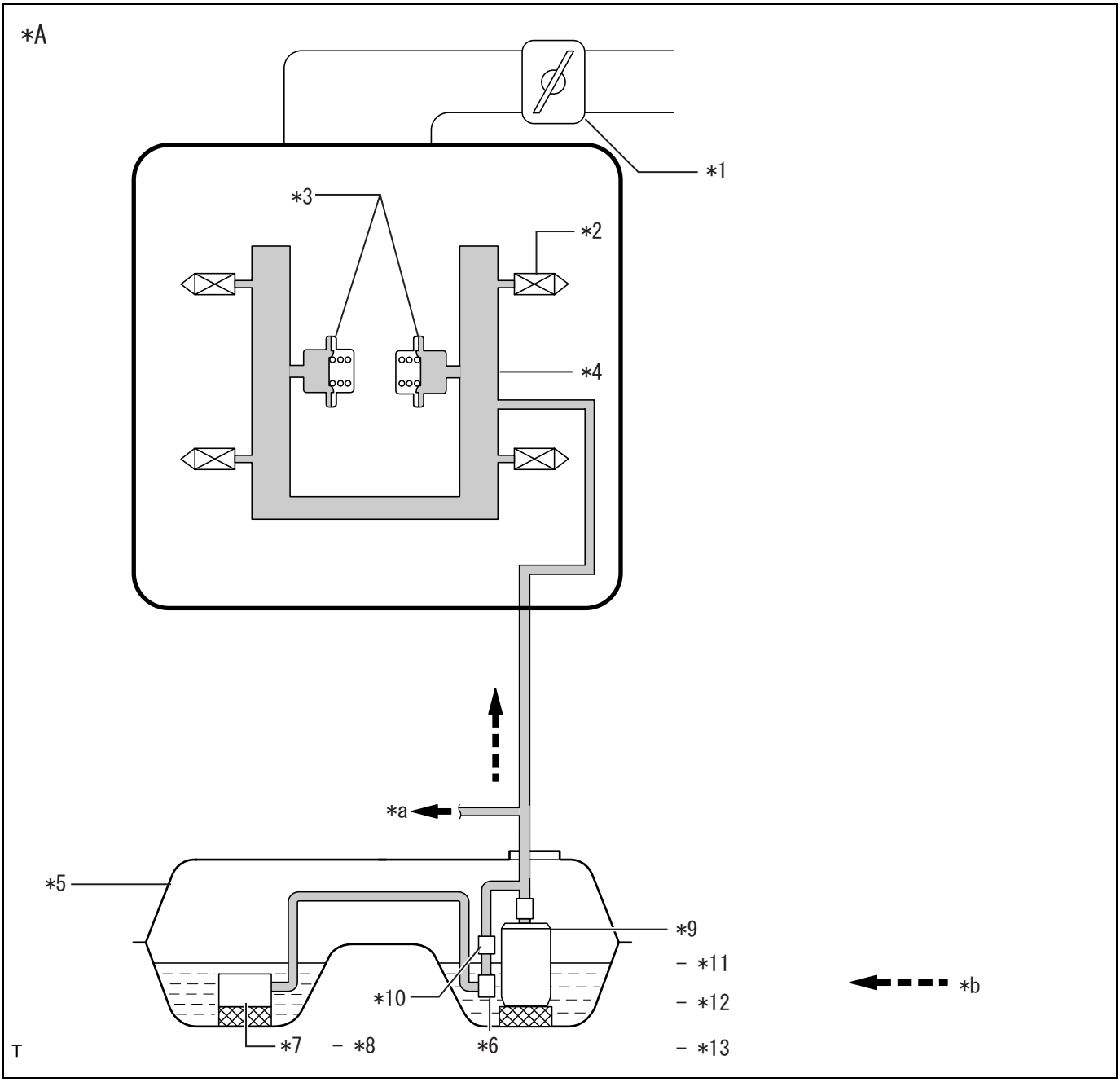

Captions in illustration

*A	Port injection side	-	-
*1	Throttle body ASSY	*2	Fuel injector ASSY
*3	Fuel pressure pulsation damper ASSY	*4	Fuel delivery pipe
*5	Fuel tank ASSY	*6	Jet pump
*7	Fuel sub sender gauge ASSY	*8	Fuel sender gauge ASSY NO.2 (Fuel sender gauge sub)
*9	Fuel pump ASSY	*10	Fuel pressure regulator
*11	Fuel sender gauge ASSY (Fuel sender gauge main)	*12	Fuel pump
*13	Fuel filter	-	-
*a	To fuel pump ASSY (High pressure side)	*b	Low pressure side fuel line

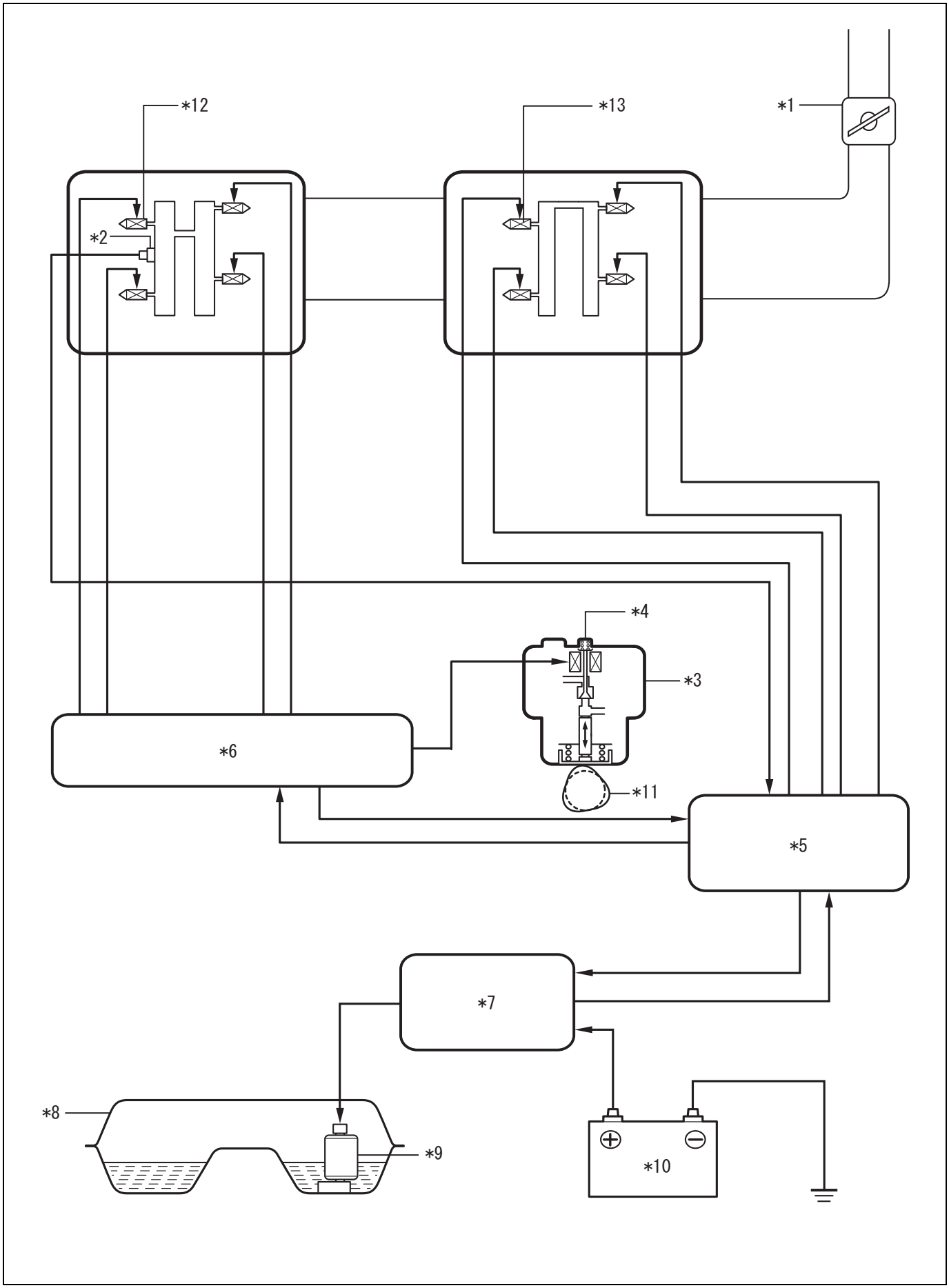
*12
*13
*1
*2
*4
*3
*6
*11
*5
*7
*8
*9
*10

Captions in illustration

*1	Throttle body ASSY	*2	Fuel pressure sensor
*3	Fuel pump ASSY (High pressure side)	*4	Spill valve solenoid
*5	Engine control computer	*6	Injector driver
*7	Fuel pump control computer	*8	Fuel tank ASSY
*9	Fuel pump ASSY	*10	Battery
*11	Camshaft	*12	Fuel injector ASSY (Cylinder injection side)
*13	Fuel injector ASSY (Port injection side)	-	-

1. Fuel injector ASSY (Cylinder injection side)

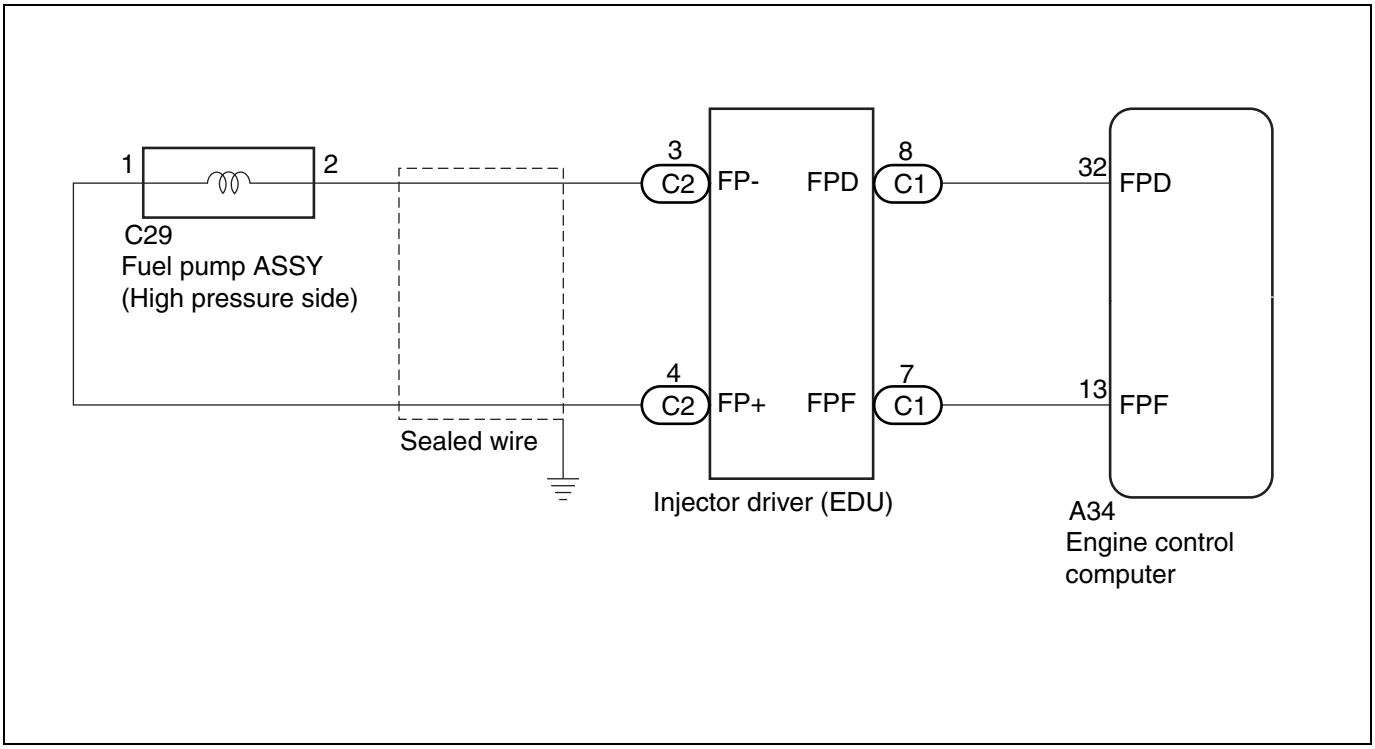

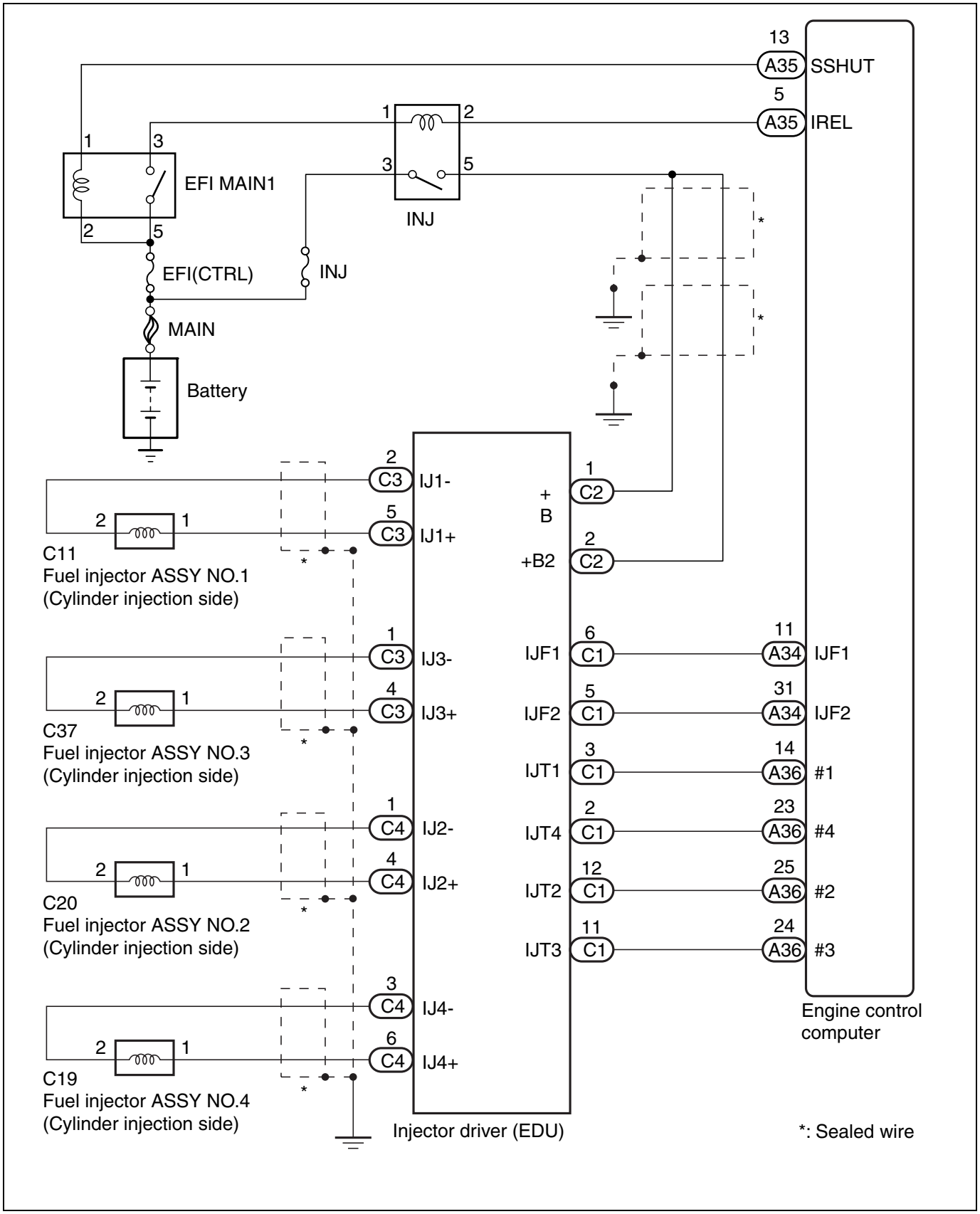

2. Fuel injector ASSY (Port injection side)

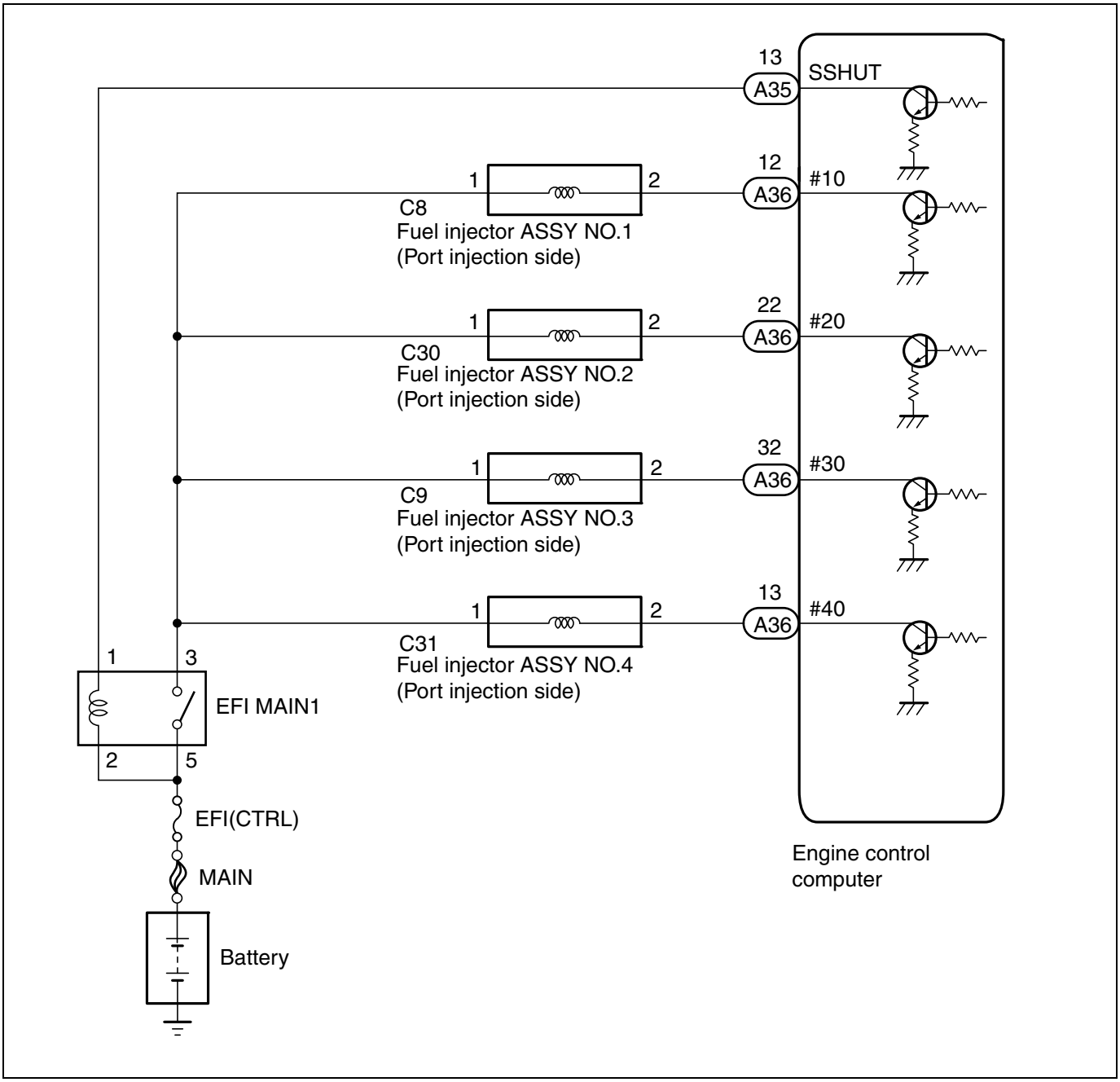
13
SSHUT
A35
12
#10
A36
1
2
C8
Fuel injector ASSY NO.1
(Port injection side)
22
#20
A36
1
2
C30
Fuel injector ASSY NO.2
(Port injection side)
32
#30
A36
1
2
C9
Fuel injector ASSY NO.3
(Port injection side)
13
#40
A36
1
2
C31
Fuel injector ASSY NO.4
(Port injection side)
1
3
EFI MAIN1
2
5
EFI(CTRL)
MAIN
Battery
Engine control
computer

FU

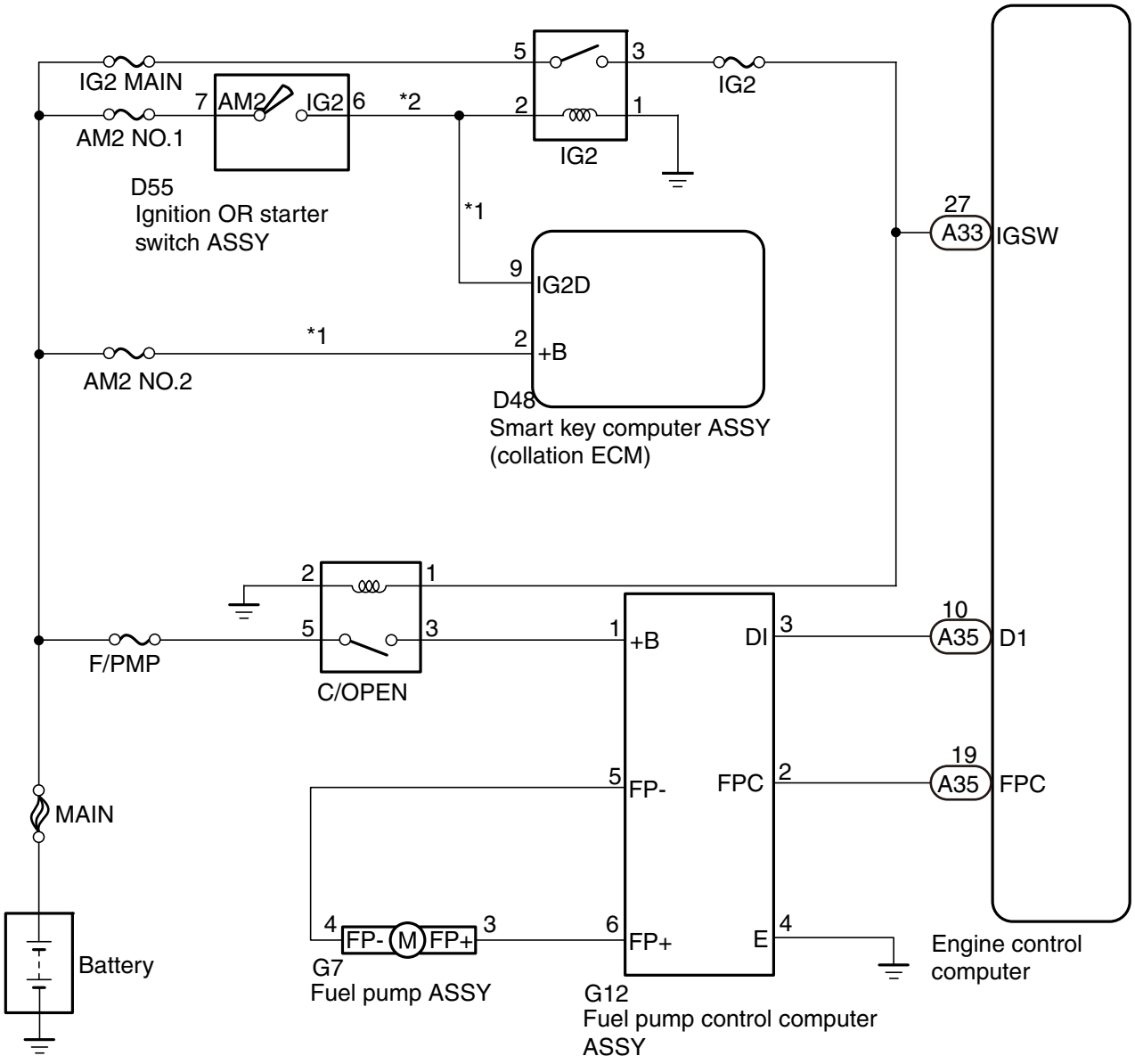

*1: Models with smart entry & start system

*2: Models without smart entry & start system

FU

Injector ASSY (FA20 / port fuel injection)

Exploded view

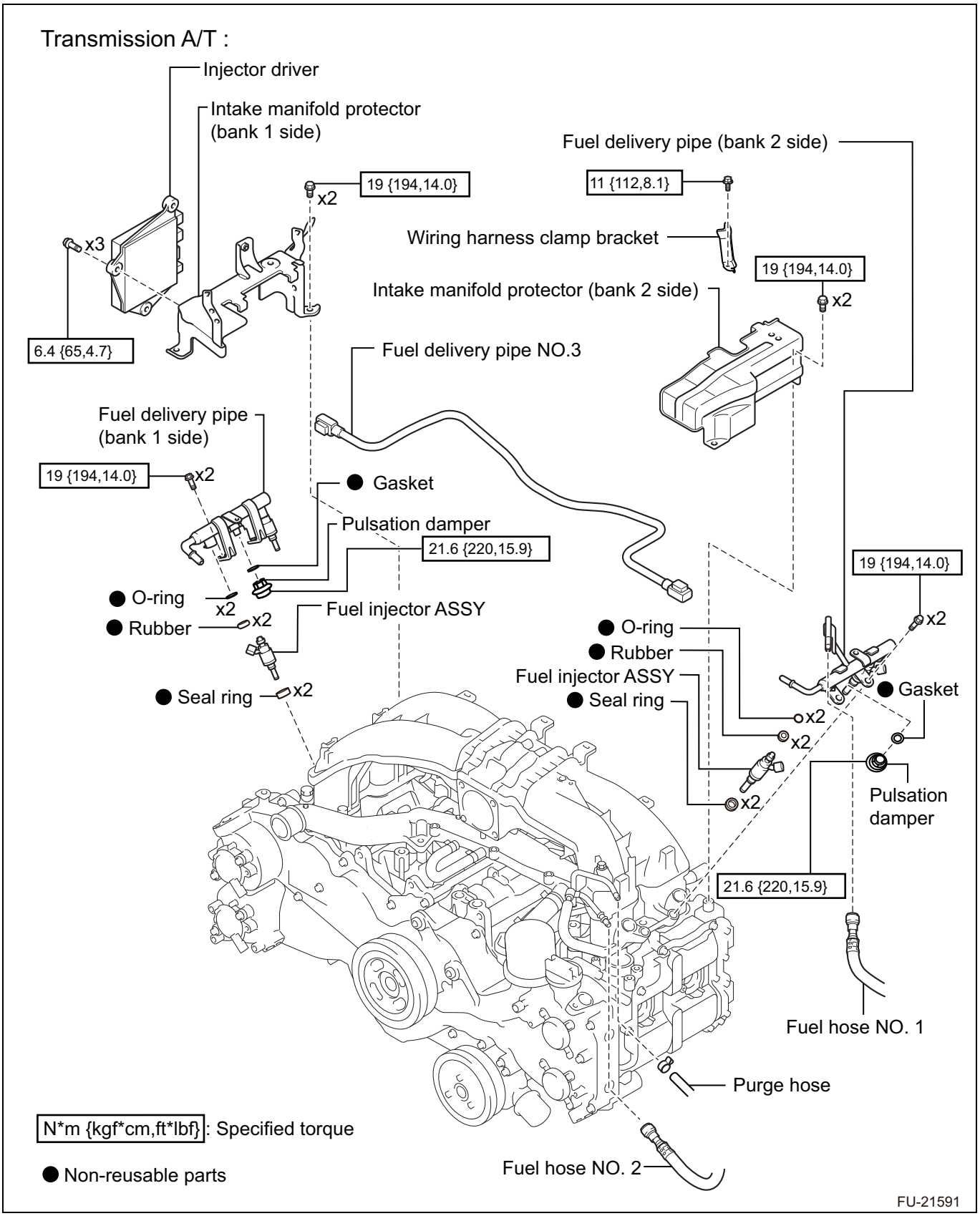

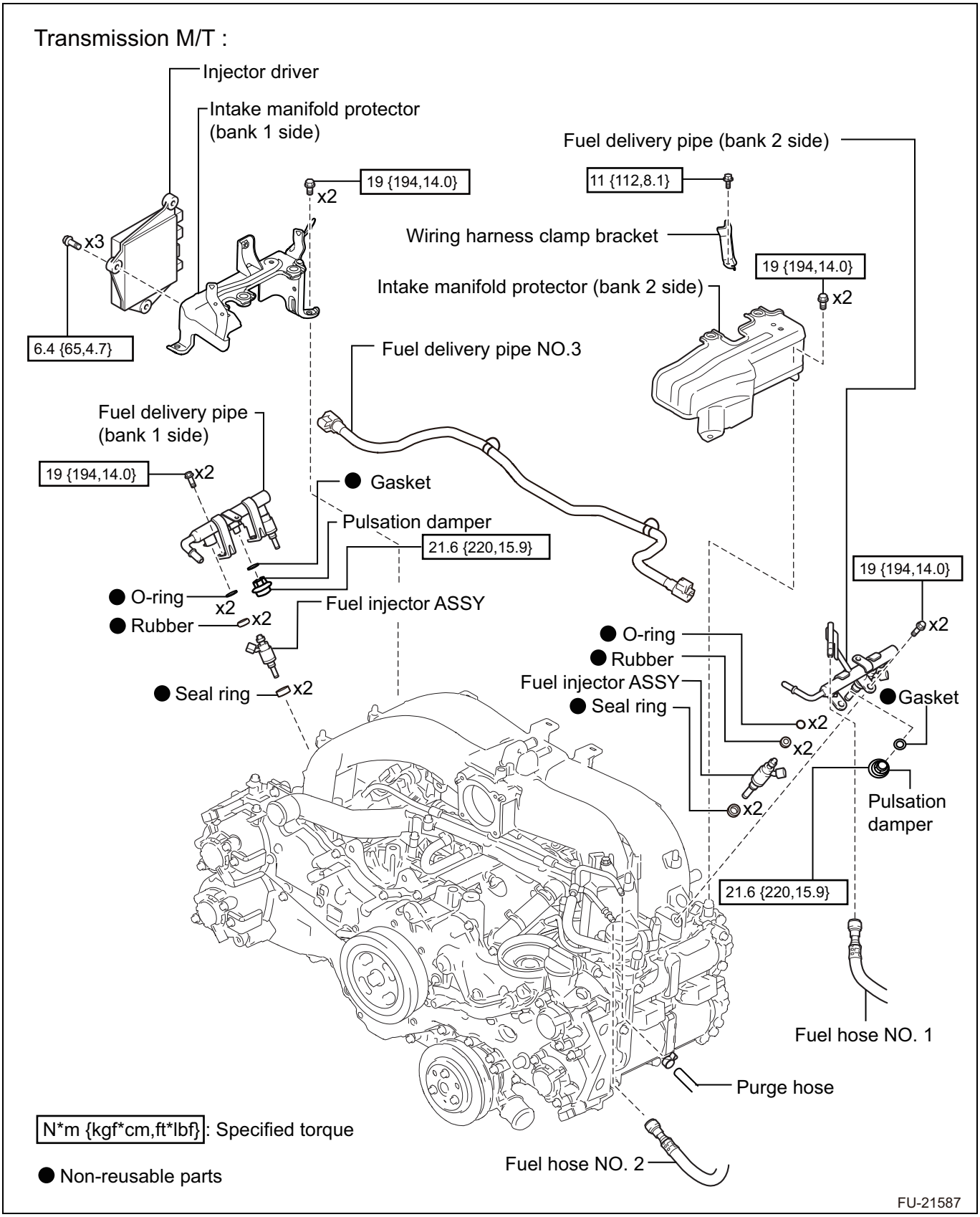

Removal

1. Fuel spill prevention procedure (Refer to FU - 3)
2. Disconnection of the battery ground terminal (Refer to IN - 6)

3. Chamber ASSY removal
   (Refer to IE - 31)
4. Removal of injector driver (Refer to FU - 43)

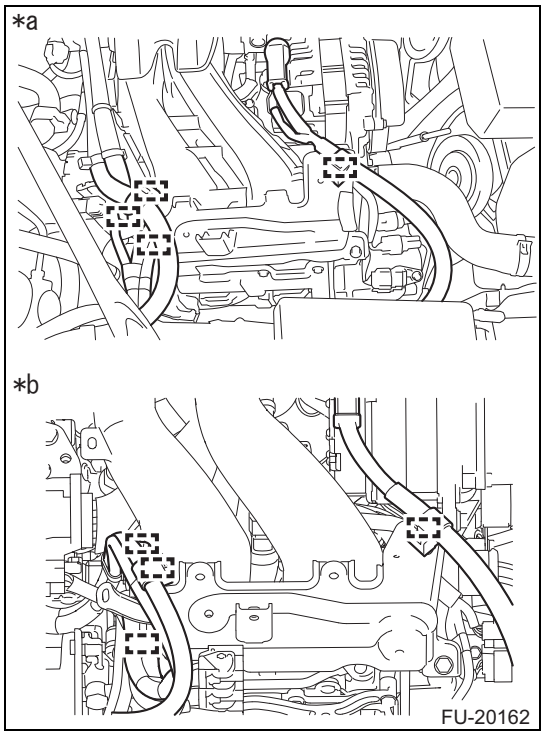

5. Intake manifold protector (bank 1 side) removal
   (1) Release the four clamps and disconnect the wiring harness.

Captions in illustration

*a	Transmission A/T
*b	Transmission M/T

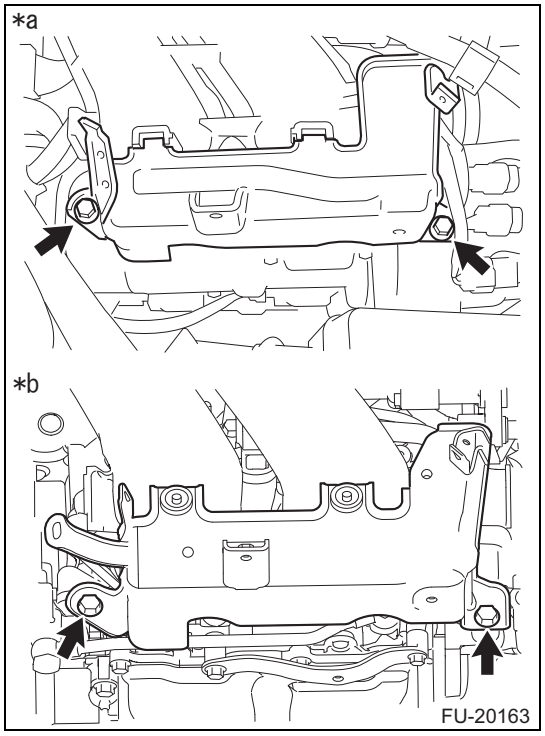

   (2) Remove the 2 bolts, and remove the intake manifold protector (bank 1 side).

Captions in illustration

*a	Transmission A/T
*b	Transmission M/T

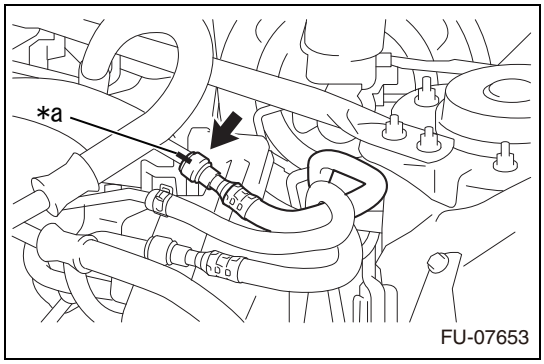

6. Fuel hose NO.1 disconnection
   (1) Put an alignment mark on the fuel hose No. 1.

Captions in illustration

*a	Alignment marks

   (2) Disconnect the fuel hose NO.1 with the SST. (Refer to FU - 3)
   SST 42099AE000

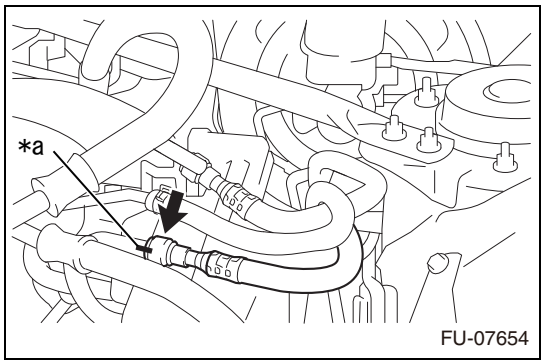

7. Fuel hose NO.2 disconnection
   (1) Put an alignment mark on the fuel hose No. 2.

Captions in illustration

*a	Alignment marks

   (2) Disconnect the fuel hose NO.2 with the SST. (Refer to FU - 3)
   SST 42099AE000

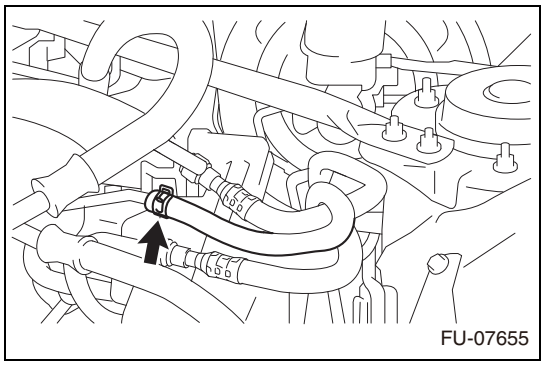

8. Purge hose disconnection
   (1) Move the hose clamp and disconnect the purge hose.

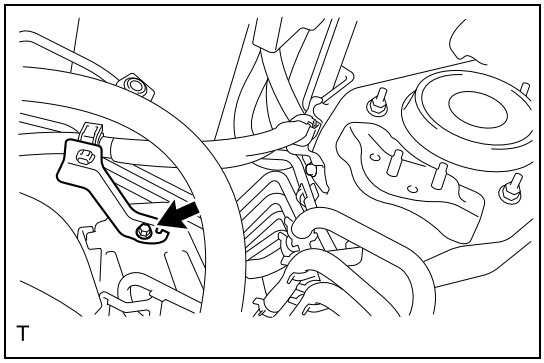

9. Intake manifold protector (bank 2 side) removal
   (1) Remove the bolt and disconnect the wiring harness clamp bracket. (Transmission A/T)

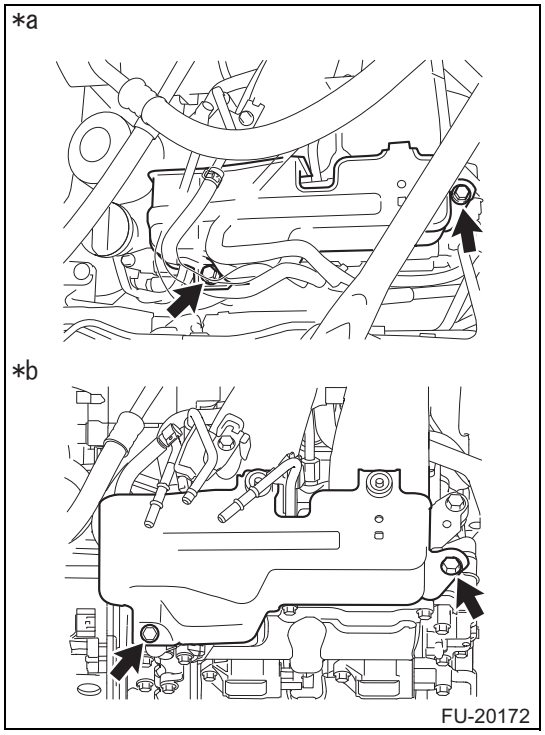

(2) Remove the 2 bolts, and remove the intake manifold protector (bank 2 side).

Captions in illustration

*a	Transmission A/T
*b	Transmission M/T

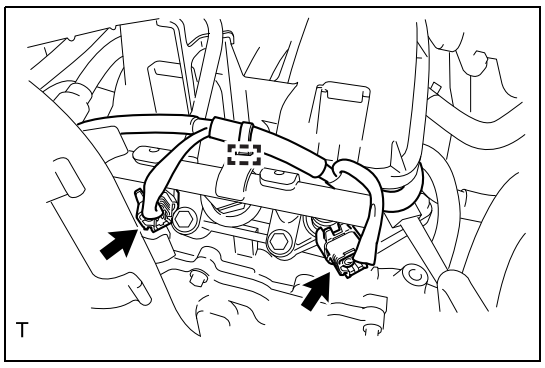

10. Fuel delivery pipe (bank 2 side) removal
    (1) Disconnect the two fuel injector ASSY connectors.
    (2) Release the clamp and disconnect the wiring harness.

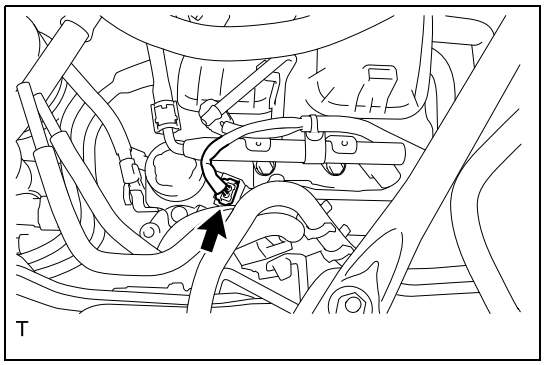

(3) Disconnect the fuel pump connector.

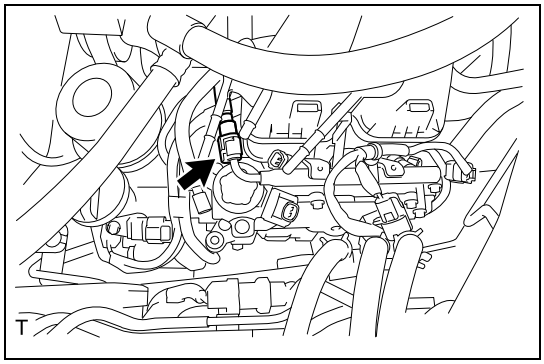

(4) Disconnect the fuel delivery pipe NO. 3 from the fuel delivery pipe (bank 2 side). (Refer to FU - 3)

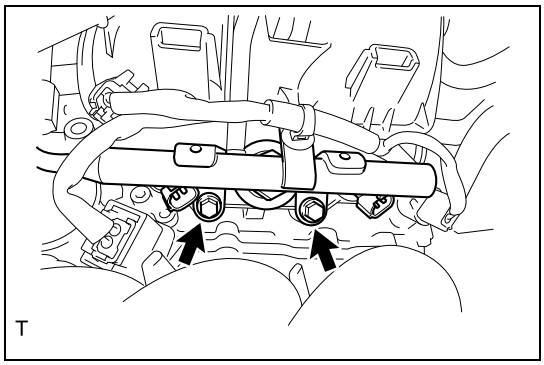

(5) Remove the 2 bolts and remove the fuel delivery pipe (bank 2 side) by pulling up it along the axis line of fuel injector ASSY.

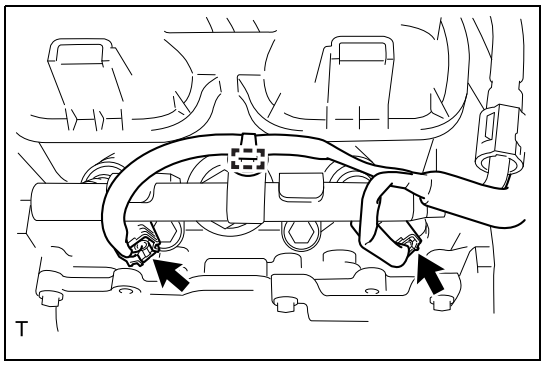

11. Fuel delivery pipe (bank 1 side) removal
    (1) Disconnect the two fuel injector ASSY connectors.
    (2) Release the clamp and disconnect the wiring harness.
    (3) Disconnect the fuel delivery pipe NO. 3 from the fuel delivery pipe (bank 1 side). (Refer to FU - 3)

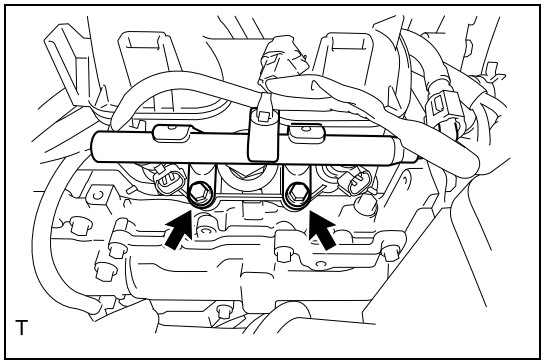

(4) Remove the 2 bolts and remove the fuel delivery pipe (bank 1 side) by pulling up it along the axis line of fuel injector ASSY.

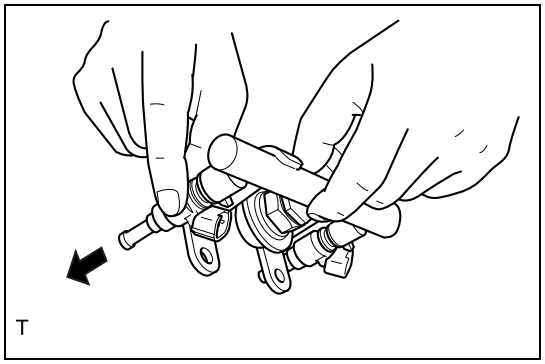
T

12. Fuel injector ASSY removal
    (1) Remove the fuel injector ASSY from the fuel delivery pipe.

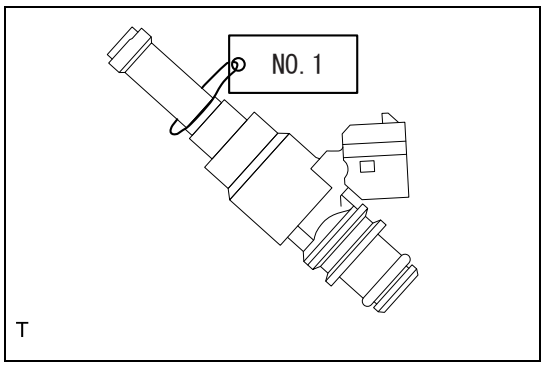

T

CAUTION:
When the fuel injector ASSY is reinstalled without replacing it, identify it with a tag etc. marked with the cylinder number.

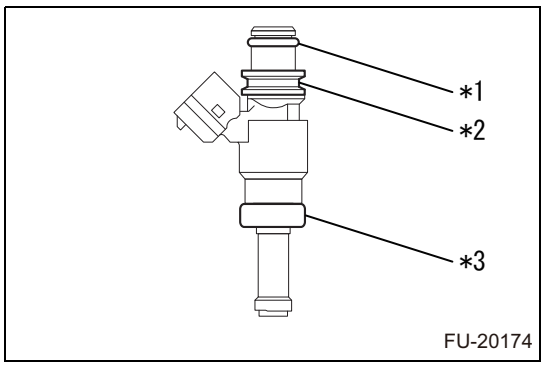

FU-20174

    (2) Remove the O-ring, rubber and seal ring from the fuel injector ASSY.

Captions in illustration

*1	O-ring
*2	Rubber
*3	Seal ring

13. Pulsation damper removal

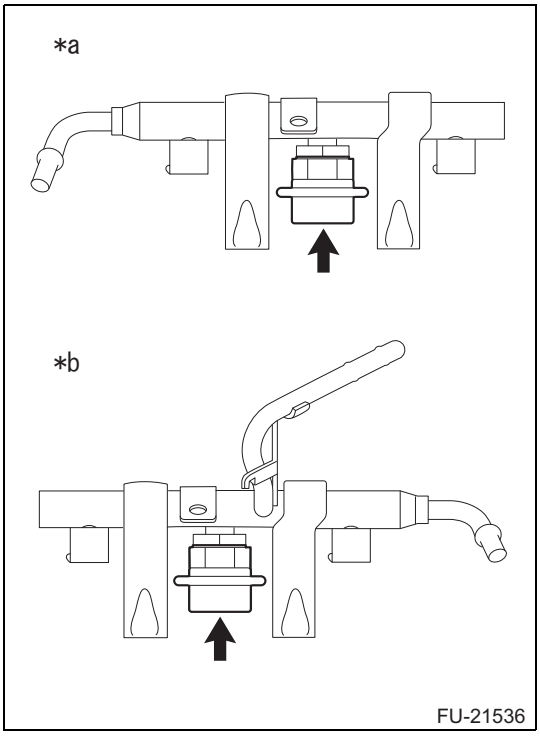

(1) Remove the pulsation damper from the fuel delivery pipe.

Captions in illustration

*a	Bank 1 side
*b	Bank 2 side

Installation

1. Pulsation damper installation

CAUTION:

- Make sure that there are no foreign matter or scratches on the pulsation damper and the insertion portion of fuel delivery pipe.
- Be careful not to deform the fuel delivery pipe.

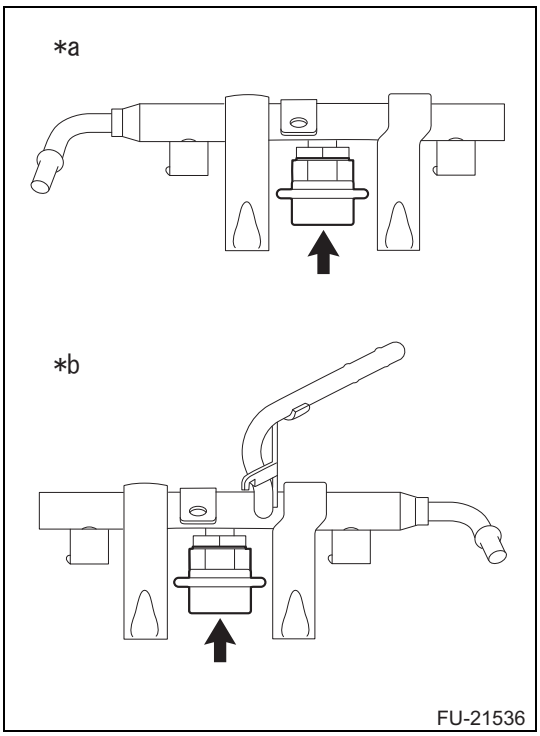

(1) Using a new gasket, install the pulsation damper to the fuel delivery pipe.

Standard value:T=21.6N·m {220kgf·cm} {15.9ft·lbf}

Captions in illustration

*a	Bank 1 side
*b	Bank 2 side

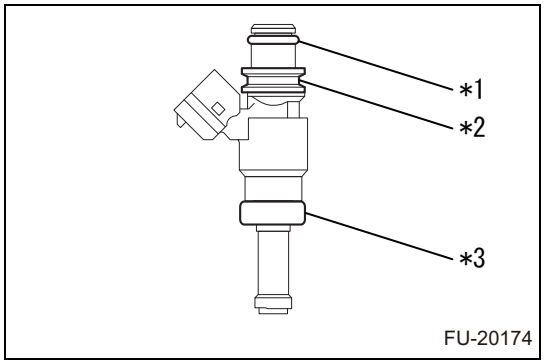

2. Fuel injector ASSY installation (low pressure side)
   (1) Apply gasoline to a new O-ring, rubber and seal ring, and install them to the fuel injector ASSY.
   CAUTION:
   Make sure that there are no damage or foreign matter in the O-ring grooves of fuel injector ASSY.

Captions in illustration

*1	New O-rings
*2	New rubber
*3	New seal ring

   (2) Install the fuel injector ASSY to the fuel delivery pipe.
   CAUTION:
   - Make sure that there are no foreign matter or scratches on the insertion portion of fuel delivery pipe.
   - Be careful not to twist the O-ring.
   - After the fuel delivery pipe is installed, make sure that it can be rotated relatively lightly. If it cannot be rotated lightly, remove the fuel injector ASSY and repeat the work after replacing the O-rings with new ones.

FU

3. Fuel delivery pipe (bank 1 side) installation
   (1) Install the fuel delivery pipe (bank 1) to the intake manifold by moving it along the axis line of fuel injector ASSY.
   (2) Tighten the two bolts.
   Standard value:T=19N·m {194kgf·cm} {14.0ft·lbf}
   (3) Connect the fuel delivery pipe NO. 3 to the fuel delivery pipe (bank 1 side). (Refer to FU - 3)
   (4) Connect the injector ASSY connector to engage the clamp.
4. Fuel delivery pipe (bank 2 side) installation
   (1) Install the fuel delivery pipe (bank 2) to the intake manifold by moving it along the axis line of fuel injector ASSY.
   (2) Tighten the two bolts.
   Standard value:T=19N·m {194kgf·cm} {14.0ft·lbf}
   (3) Connect the fuel pump connector.
   (4) Connect the fuel delivery pipe NO. 3 to the fuel delivery pipe (bank 2 side). (Refer to FU - 3)
   (5) Connect the fuel injector ASSY connector to engage the clamp.
5. Intake manifold protector (bank 2 side) installation
   (1) Using 2 bolts, install the intake manifold protector (bank 2 side).
   Standard value:T=19N·m {194kgf·cm} {14.0ft·lbf}
   (2) Install the wiring harness clamp bracket with the bolt. (Transmission A/T)
   Standard value:T=11N·m {112kgf·cm} {8.1ft·lbf}
6. Purge hose connection
   (1) Connect the purge hose and secure it with the hose clamp.
7. Fuel hose NO.2 connection
8. Fuel hose NO.1 connection
9. Intake manifold protector (bank 1 side) installation
   (1) Using 2 bolts, install the intake manifold protector (bank 1 side).
   Standard value:T=19N·m {194kgf·cm} {14.0ft·lbf}
   (2) Engage the four clamps and connect the wiring harness.
10. Installation of injector driver (Refer to FU - 44)
11. Chamber ASSY installation
    (Refer to IE - 32)
12. Connection of the battery ground terminal
    Standard value:T=6.0N·m {61kgf·cm} {4.4ft·lbf}

Unit inspection

1. Fuel injector ASSY check

   CAUTION:

   This procedure must be used only when judging short circuit and open circuit. It cannot be used for judging defective operation.

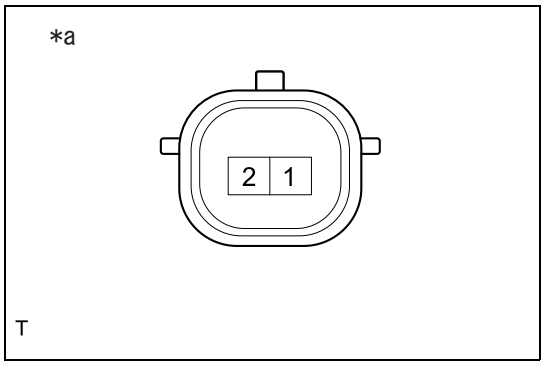

(1) Resistance check

(a)Measure the resistance between the terminals.

Resistance

Inspection terminals	Inspection conditions	Standard value
1 - 2	20°C {68°F}	12 Ω

Captions in illustration

*a	Connector not connected (Fuel injector ASSY)

Injector ASSY (FA20 / direct fuel injection)

Exploded view

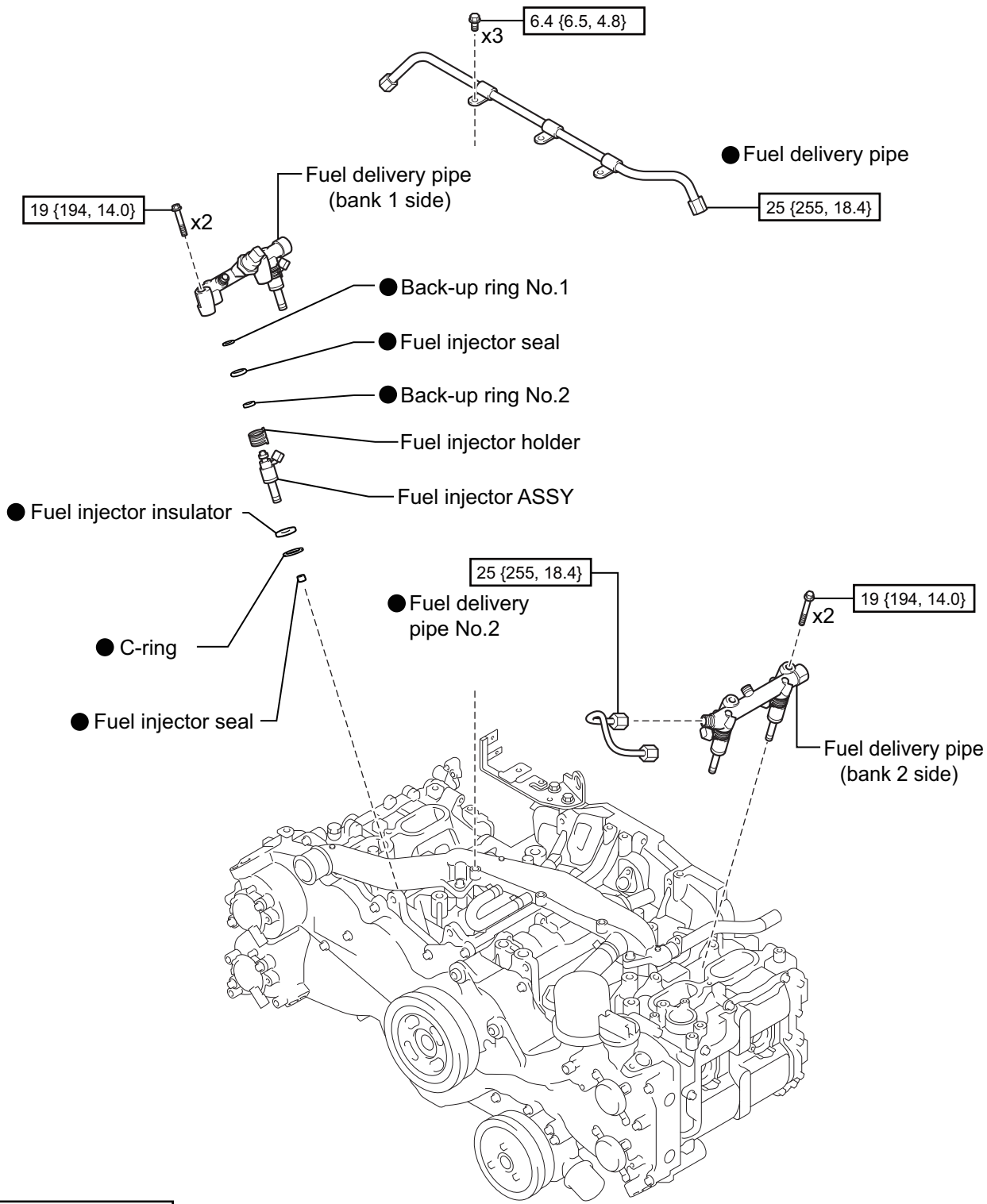

Removal

1. Intake manifold removal
   (Refer to IE - 17)

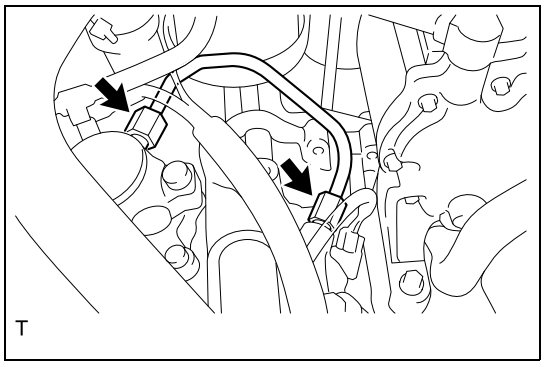

2. Fuel delivery pipe NO.2 removal
   (1) Remove the fuel delivery pipe NO.2.
   CAUTION:
   When removing the fuel delivery pipe NO.2, pull it straight out so that the seal surface of fuel delivery pipe LH is not damaged.

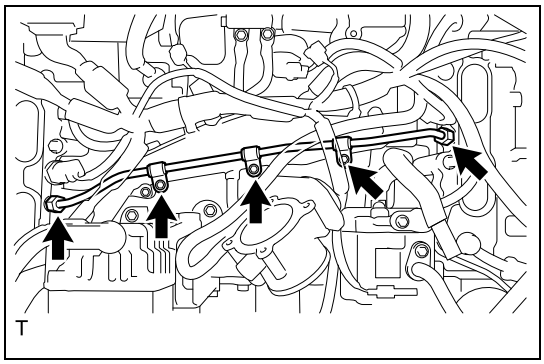

3. Fuel delivery pipe removal
   (1) Remove the 3 bolts.
   (2) Remove the fuel delivery pipe.

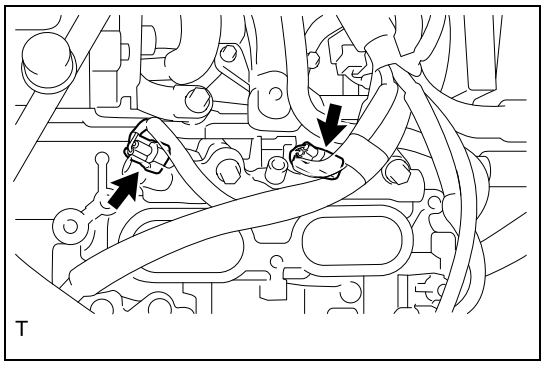

4. Fuel delivery pipe (bank 2 side) removal
   (1) Disconnect the two fuel injector connectors.

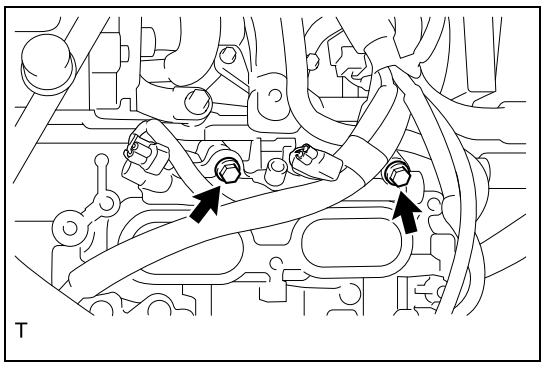

   (2) Remove the two bolts and remove fuel delivery pipe (bank 2 side).

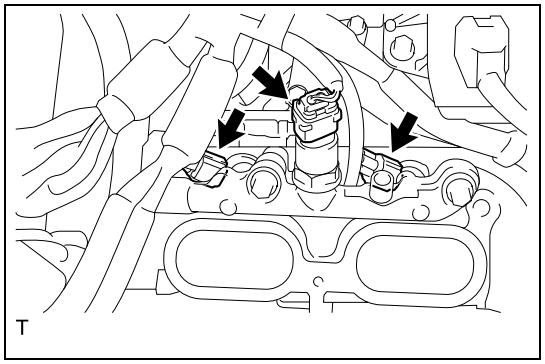

5. Fuel delivery pipe (bank 1 side) removal
   (1) Disconnect the fuel pressure sensor connector and two fuel injector connectors.

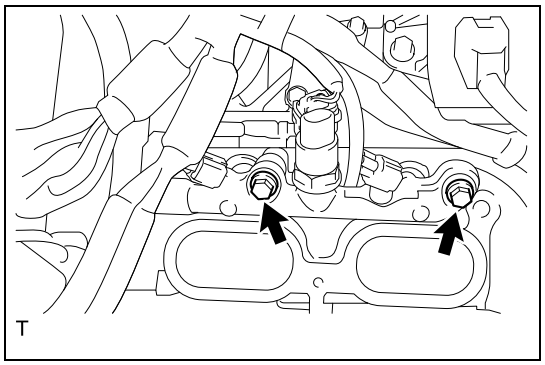

   (2) Remove the two bolts and remove fuel delivery pipe (bank 1 side).

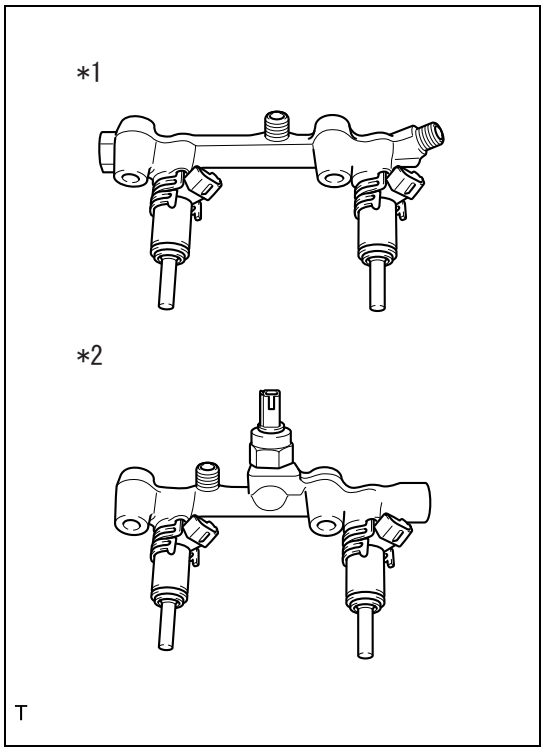

6. Fuel injector ASSY removal
   (1) Remove the fuel injector ASSY from the fuel delivery pipes (bank 2 side) and (bank 1 side).

Captions in illustration

*1	Bank 2 side
*2	Bank 1 side

CAUTION:
- If the tip of fuel injector ASSY is bumped or dropped, replace the fuel injector ASSY with a new one.
- When removing the injector, pull it straight out so that the seal surfaces of fuel delivery pipes (bank 2 side) and (bank 1 side) are not damaged.

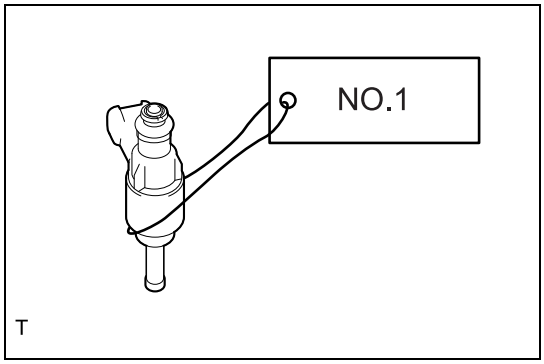

- Identify the removed fuel injector ASSY with a tag etc. marked with the cylinder number.

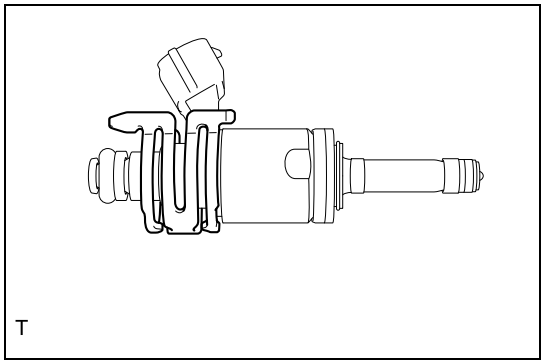

(2) Remove the fuel injector holder from the fuel injector ASSY.

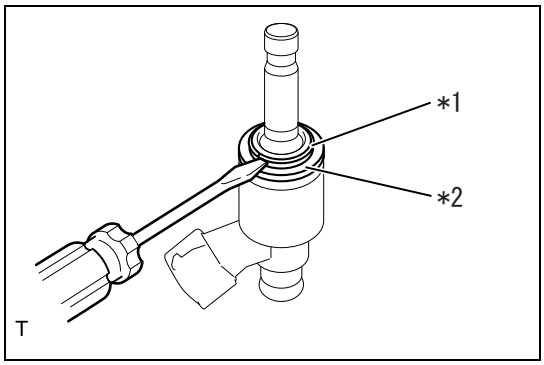

(3) Remove the C-ring and fuel injector insulator.

Captions in illustration

*1	C-ring
*2	Fuel injector insulator

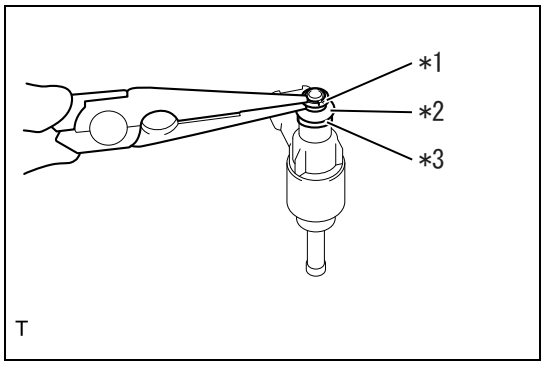

(4) Remove the back-up ring NO.1.

Captions in illustration

*1	Back-up ring NO.1
*2	Fuel injector seal
*3	Back-up ring NO.2

(5) Remove the fuel injector seal and back-up ring NO.2.

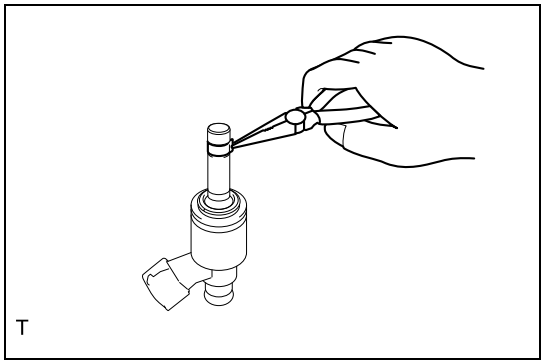
T

7. Fuel injector seal removal
   (1) Hold the fuel injector seal and widen it a little.
   CAUTION:
   - Be careful not to hold the fuel injector seal too strongly in order to protect the injector groove from scratches.
   - If the tip of fuel injector ASSY is bumped or dropped, replace the fuel injector ASSY with a new one.

Installation

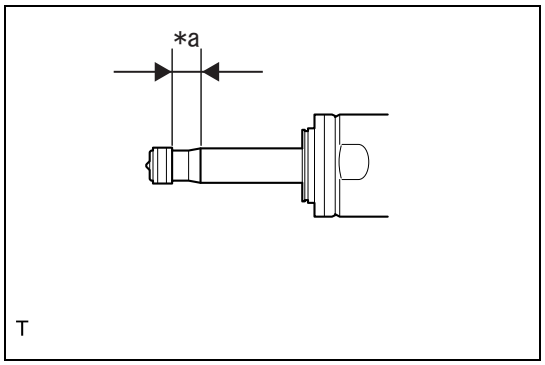

T

1. Fuel injector seal installation
   (1) Use the engine conditioner to remove the carbon on engine oil on the side surface and seal groove of injector shown in the figure.

Captions in illustration

*a	Cleaning area

   CAUTION:
   - Do not clean the tip portion.
   - Do not use a wire brush etc.
   - If the tip of fuel injector ASSY is bumped or dropped, replace the fuel injector ASSY with a new one.

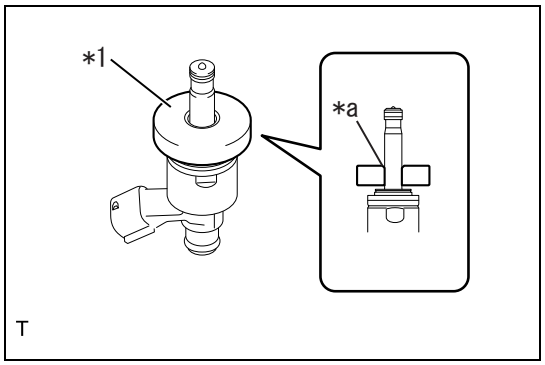

T

   (2) Apply engine oil to the inner periphery of SST (guide) and set it on the injector so that the taper surface faces toward the tip side of injector.
   SST 09260-39020

Captions in illustration

*1	SST (guide)
*a	Taper surface

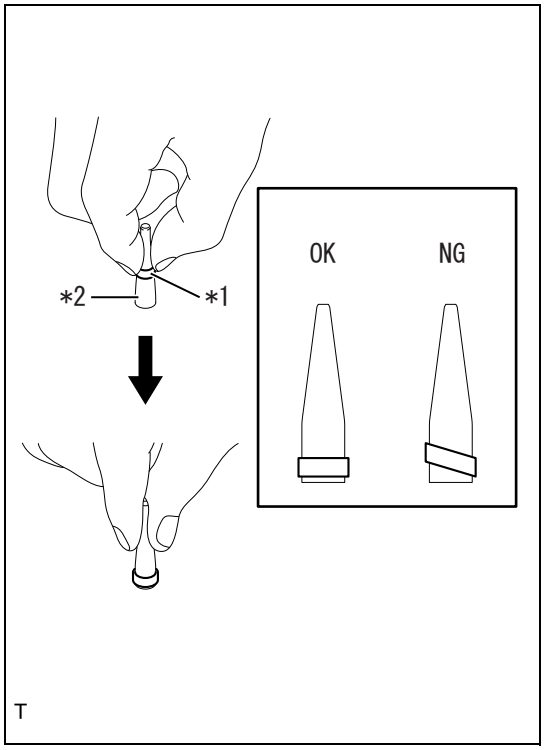

(3) Install a new fuel injector seal to the SST (holder).
SST 09260-39020

Captions in illustration

*1	Fuel injector seal
*2	SST (holder)

CAUTION:
When setting the fuel injector seal on the SST (holder), the seal is stretched and it is difficult to correct if the seal is set at an angle.

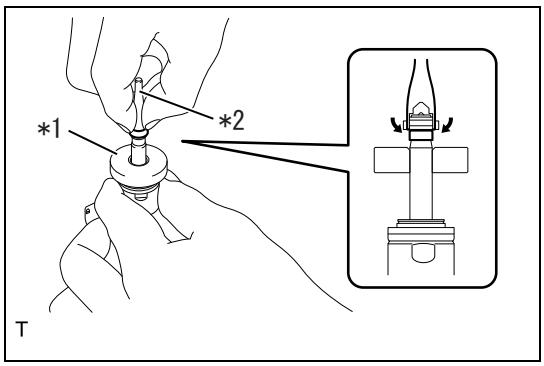

(4) Set the SST (holder) with the fuel injector seal to the tip of injector and push down the fuel injector seal with fingers to install it in the injector groove shown in the figure.
SST 09260-39020

Captions in illustration

*1	SST (guide)
*2	SST (holder)

CAUTION:
Make sure the fuel injector seal is completely fitted in the groove for its entire circumference.

FU

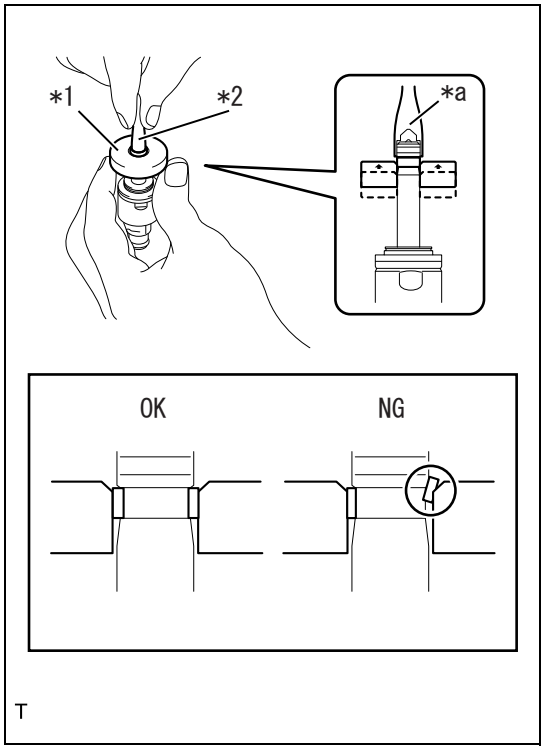

(5) While holding the fuel injector seal (connector side) lightly with the SST (holder), pull up the SST (guide) toward the injector tip side slowly and seat the fuel injector seal in the injector groove.
SST 09260-39020

Captions in illustration

*1	SST (guide)
*2	SST (holder)
*a	Hold

CAUTION:
Be careful not to pinch the fuel injector seal between the SST (guide) and injector groove. If it is pinched, replace it with a new one.

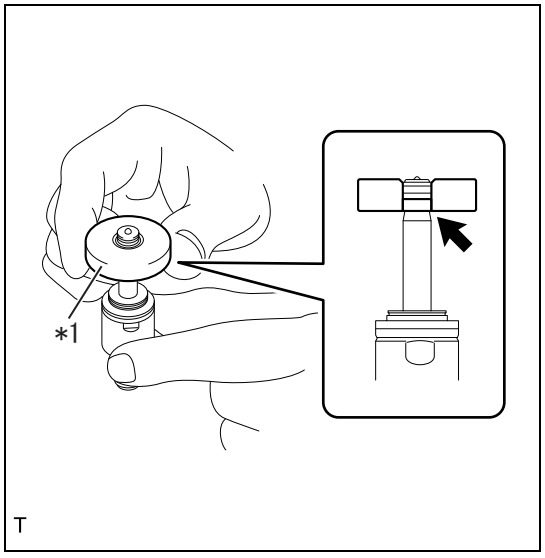

(6) Pull up the SST (guide) toward the injector tip side slowly and hold the SST for 5 sec. or more when the fuel injector seal on the connector side reaches to the straight portion of SST (guide) in order to correct the fuel injector seal.
SST 09260-39020

Captions in illustration

*1	SST (guide)

CAUTION:
Be careful not to pinch the fuel injector seal between the SST (guide) and injector groove. If it is pinched, replace it with a new one.
NOTE:
- A rough indication of the straight portion is the position where the bottom of fuel injector seal aligns with the bottom of SST (guide).
- When the SST (guide) cannot be pulled up because it is stuck, pull up it gradually by rotating the SST (guide) to the left and right slowly.

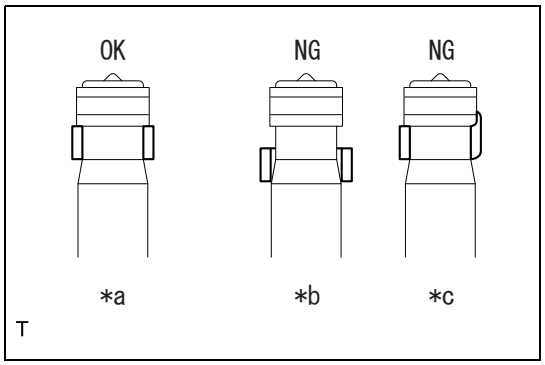

(7) After the fuel injector seal is installed, make sure that there is no scratches on the seal, crushing of the seal, or protrusion of the seal from the seal groove.

Captions in illustration

*a	Normal
*b	Correction failure
*c	Failure

CAUTION:
When there is any scratches on the fuel injector seal, crushing of it, or protrusion of it from the seal groove, replace it with a new part.

2. Fuel injector ASSY installation
CAUTION:
If the tip of fuel injector ASSY is bumped or dropped, replace the fuel injector ASSY with a new one.

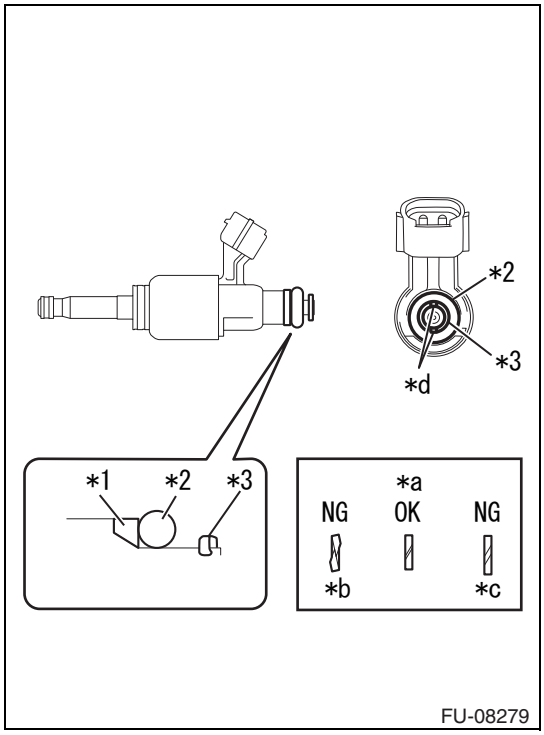

(1) Install a new back-up ring NO.2, new fuel injector seal and new back-up ring NO.1 as shown in the figure.

Captions in illustration

*1	Back-up ring No. 2
*2	Fuel injector seal
*3	Back-up ring No. 1
*a	Back-up ring gap
*b	Running on
*c	Widening
*d	Groove

CAUTION:

- There must be no foreign matter, scratches, etc. in the fuel injector seal groove of injector.
- Be careful not to mix up the directions of back-up springs NO.1 and NO.2.
- Be careful not to mix up the installation order of back-up spring and fuel injector seal.
- There must be no running on or widening of back-up ring gap portion as shown in the figure.
- After the installation, there must be no foreign matter, scratches, etc. in the fuel injector seal.

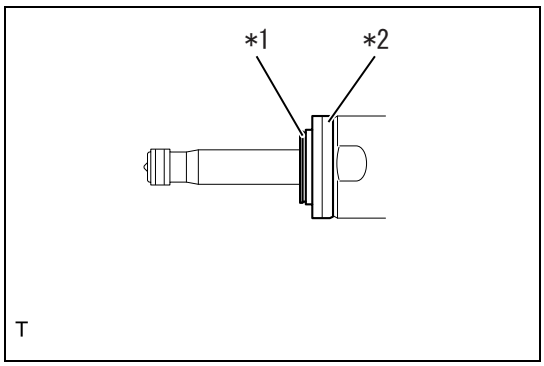

(2) Install a new fuel injector insulator and new O-ring.

Captions in illustration

*1	C-ring
*2	Fuel injector insulator

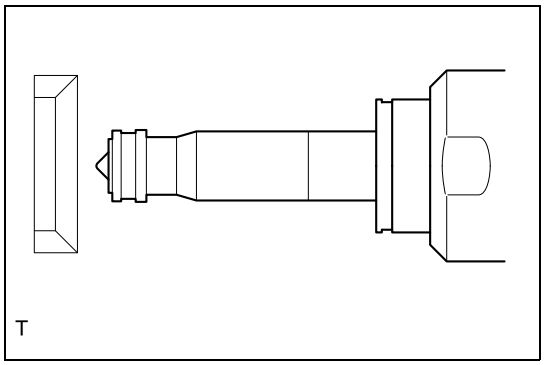

CAUTION:
Install the fuel injector insulator in the direction as shown in the figure.

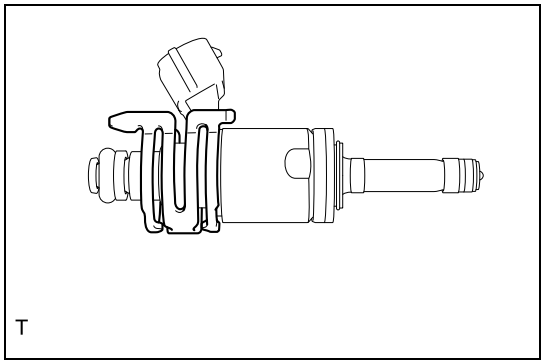

(3) Install the fuel injector holder to the fuel injector ASSY.

(4) Apply new engine oil to the chamfered portions of injector insertion holes of the fuel delivery pipes (bank 2 side) and (bank 1 side).

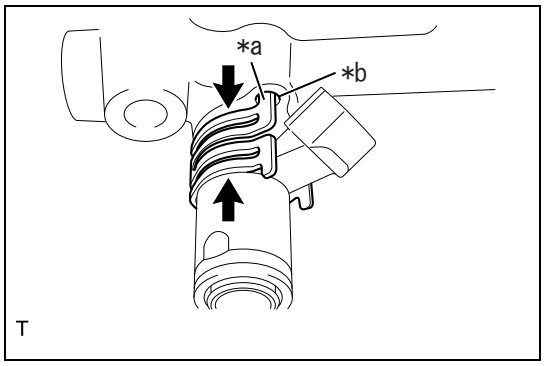

(5) Align the protrusion of fuel injector holder to the arrest holes of fuel delivery pipes (bank 2 side) and (bank 1 side) to install the fuel injector holder.

Captions in illustration

*a	Protrusion portion
*b	Arrest hole
➡	There must be no gap.

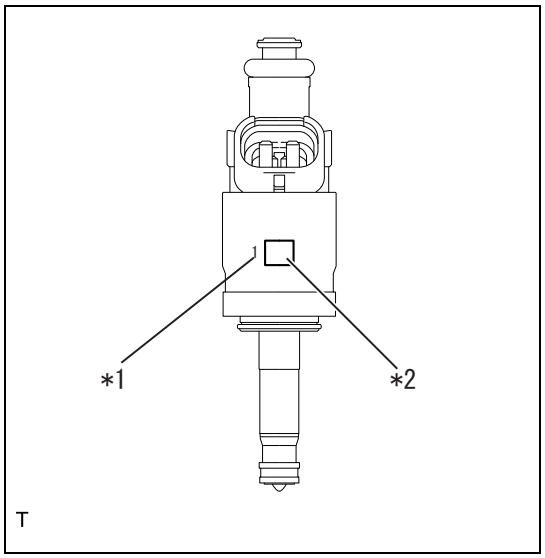

CAUTION:

- There must be no foreign matter, scratches, etc. inside the injector insertion holes of the fuel delivery pipes (bank 2 side) and (bank 1 side).
- There must be no gasoline on the fuel injector seal and inside the attachment hole.
- Insert the injector straight to the fuel delivery pipes (bank 2 side) and (bank 1 side) without tilting it.
- There must be no gap between the high pressure side fuel injector pipe and fuel injector holder.
- When replacing the fuel injector ASSY, install a new ASSY with the same flow stratified number.

Captions in illustration

*1	Flow stratified number
*2	QR code

3. Fuel delivery pipe (bank 2 side) installation
   (1) Install the fuel delivery pipe (bank 2 side) with the two bolts.
   Standard value:T=19N·m {194kgf·cm} {14.0ft·lbf}
   (2) Connect the two fuel injector connectors.
4. Fuel delivery pipe (bank 1 side) installation
   (1) Install the fuel delivery pipe (bank 1 side) with the two bolts.
   Standard value:T=19N·m {194kgf·cm} {14.0ft·lbf}
   (2) Connect the two fuel injector connectors and fuel pressure sensor connector.
5. Fuel delivery pipe installation
   (1) Temporarily tighten the nut for new fuel delivery pipe until it is seated.
   (2) Temporarily install the fuel delivery pipe with the three bolts.
   (3) Tighten the three bolts.
   Standard value:T=6.4N·m {65kgf·cm} {4.7ft·lbf}
   (4) Tighten the fuel delivery pipe.
   Standard value:T=25N·m {255kgf·cm} {18.4ft·lbf}
6. Fuel delivery pipe NO.2 installation
   (1) Temporarily tighten the nut for new fuel delivery pipe No.2 until it is seated.
   (2) Tighten the fuel delivery pipe NO.2.
   Standard value:T=25N·m {255kgf·cm} {18.4ft·lbf}
7. Intake manifold installation
   (Refer to IE - 28)

Unit inspection

1. Fuel injector ASSY check

   CAUTION:

   This procedure must be used only when judging short circuit and open circuit. It cannot be used for judging defective operation.

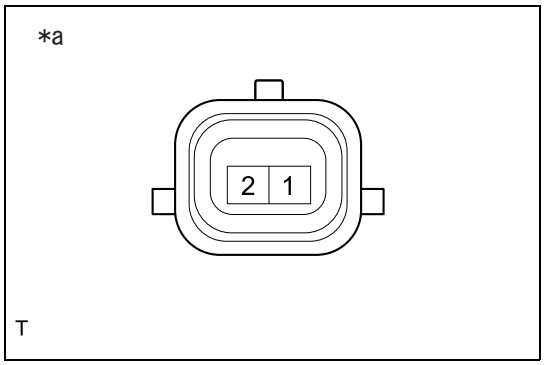

(1) Resistance check

(a)Measure the resistance between the terminals.

Resistance

Inspection terminals	Inspection conditions	Standard value
1 - 2	20°C{68°F}	1.9 Ω

Captions in illustration

*a	Connector not connected (Fuel injector ASSY)

Fuel pressure sensor (FA20)

Exploded view

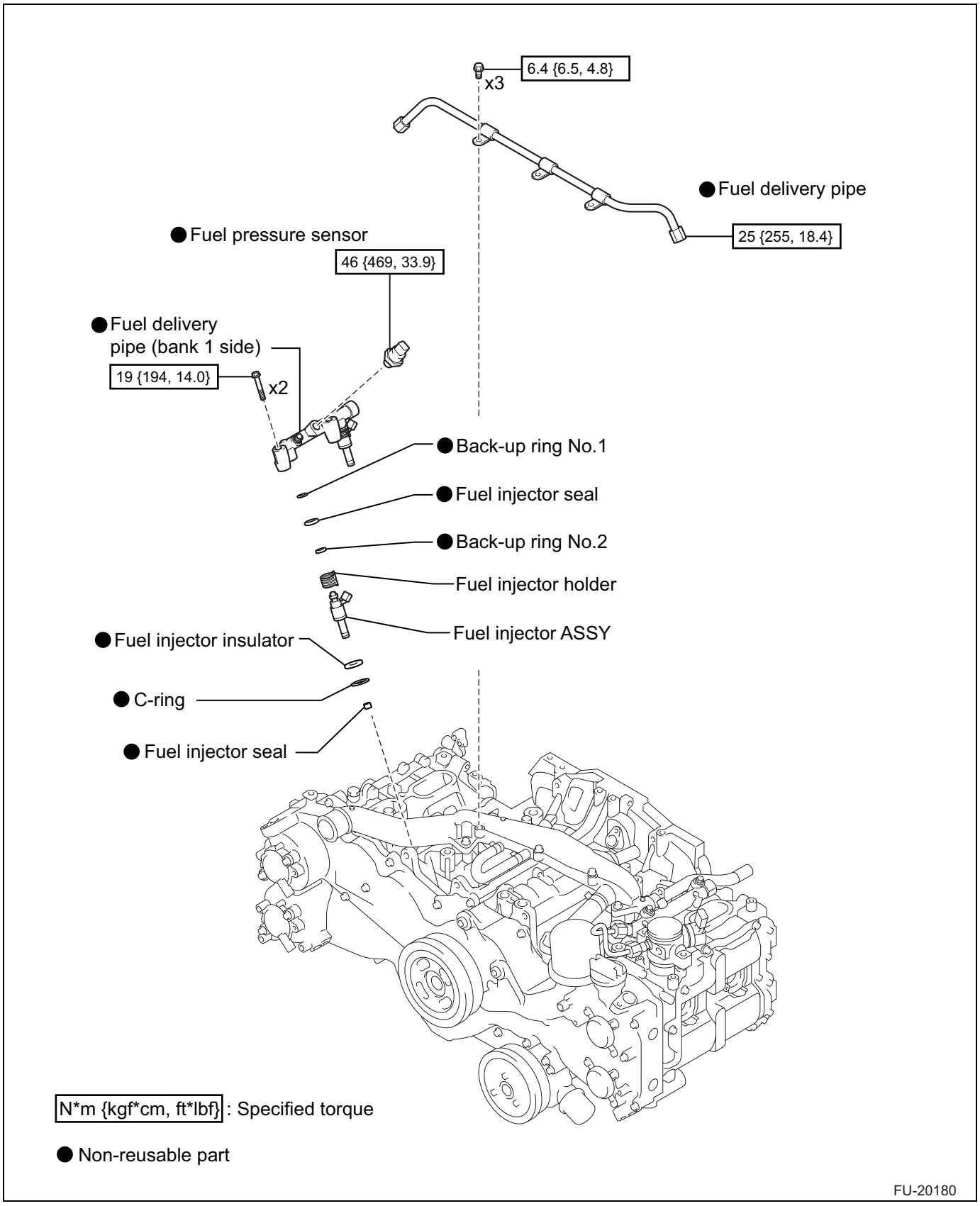

Removal

1. Intake manifold removal
   (Refer to IE - 17)

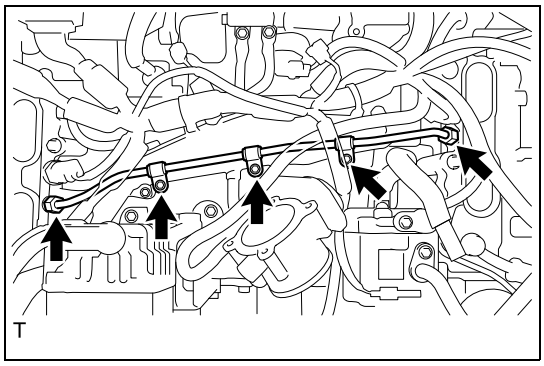

2. Fuel delivery pipe removal
   (1) Remove the 3 bolts.
   (2) Remove the fuel delivery pipe.

3. Fuel delivery pipe (bank 1 side) removal

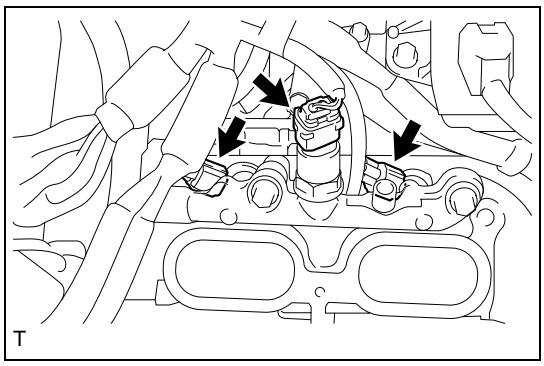

(1) Disconnect the fuel pressure sensor connector and two fuel injector connectors.

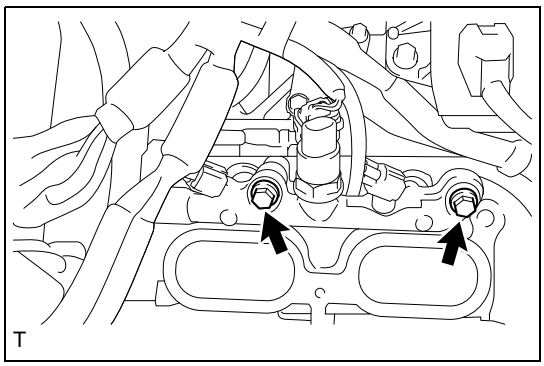

(2) Remove the two bolts and remove fuel delivery pipe (bank 1 side).

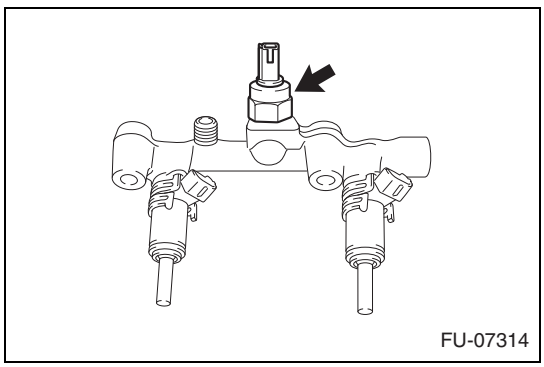

4. Fuel pressure sensor removal
   (1) Remove the fuel pressure sensor from the fuel delivery pipe (bank 1 side).

5. Fuel injector ASSY removal (Refer to FU - 32)

Installation

1. Fuel injector ASSY installation (Refer to FU - 34)
   CAUTION:
   Use a new fuel delivery pipe (bank 1 side).

2. Fuel delivery pipe (bank 1 side) and fuel pressure sensor installation
   (1) Install the fuel delivery pipe (bank 1 side) with the two bolts.
   Standard value:T=19N·m {194kgf·cm} {14.0ft·lbf}
   (2) Temporarily install a new fuel pressure sensor to the fuel delivery pipe (bank 1 side) until it can be turned by hand.
   (3) Fuel the fuel pressure sensor.
   Standard value:T=46N·m {469kgf·cm} {33.9ft·lbf}
   CAUTION:
   - There must be no oil on the threaded portions of fuel pressure sensor and fuel delivery pipe (bank 1 side).
   - Do not allow foreign matter to get in when installing the fuel pressure sensor.
   - Do not retighten (or recheck the tightening torque of) the fuel pressure sensor after it is tightened once.
   (4) Connect the two fuel injector connectors and fuel pressure sensor connector.
3. Fuel delivery pipe installation
   (1) Temporarily tighten the nut for the new fuel delivery pipe until it is seated.
   (2) Temporarily install the fuel delivery pipe with the three bolts.
   (3) Tighten the three bolts.
   Standard value:T=6.4N·m {65kgf·cm} {4.7ft·lbf}
   (4) Tighten the fuel delivery pipe.
   Standard value:T=25N·m {255kgf·cm} {18.4ft·lbf}
4. Intake manifold installation
   (Refer to IE - 28)

FU

Unit inspection

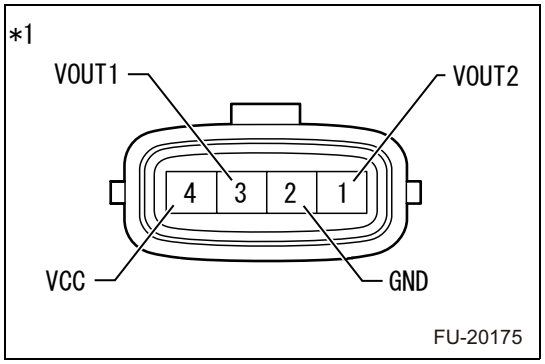

1. Fuel pressure sensor check
   (1) Output voltage check
   (a)Measure the voltage between the terminals.

Voltage

Inspection terminals	Inspection conditions	Standard value
3(VOUT1) - 2(GND)	Apply 5 V voltage between the terminals 4 (VCC) and 2 (GND).	Approx. 0.5 V

Captions in illustration

*1	Connector not connected (Fuel pressure sensor)

CAUTION:
- Wrong connection of the inspection terminals may damage the fuel pressure sensor. Pay special attention to the connection work.
- Do not apply voltage of 6 V or higher between the terminals 4 (VCC) and 2 (GND).

NOTE:
If a stabilized power source is not available, use nickel hydride batteries (1.2 V ×4) etc.

Injector driver (FA20)

Exploded view

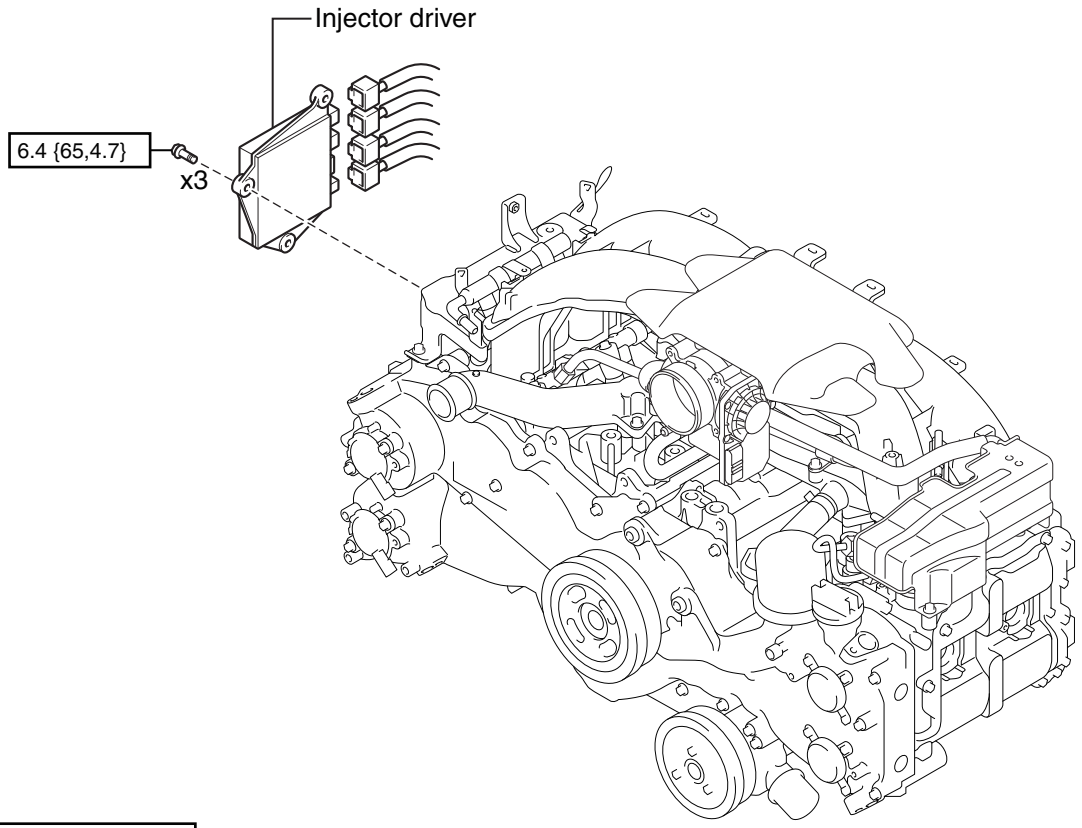

N•m {kgf•cm, ft•lbf} : Specified torque

FU-07446

Removal

1. Disconnection of the battery ground terminal (Refer to IN - 6)

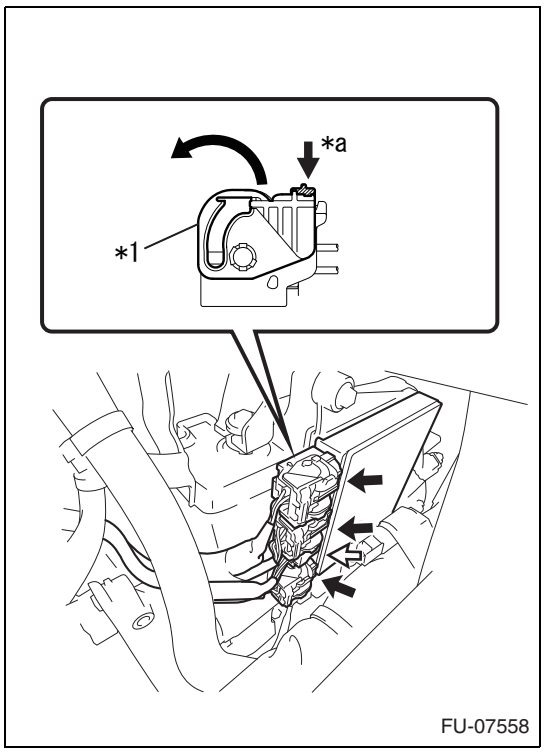

FU-07558

2. Injector driver removal
   (1) Move the lock lever in the direction of arrow to unlock the three connectors.

Captions in illustration

*1	Lock lever
*a	Unlock
➡	Connector with lock
⇨	Normal connector

   (2) Disconnect the three connectors with lock and normal connector from the injector driver.

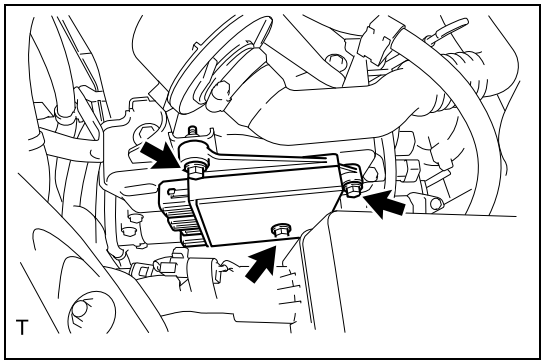

(3) Remove the three bolts and remove the injector driver.
CAUTION:
Do not apply any impact to the injector driver.

Installation

FU

1. Injector driver installation
CAUTION:
- Do not apply any impact to the injector driver.
- When installing the injector driver, check that the installation portion of the injector driver to the engine is not dirty. The injector driver is grounded to the engine. Therefore, improper cleaning or installation may cause malfunction of the injector driver.

(1) Install the injector driver with the three bolts.
Standard value:T=6.4N·m {65kgf·cm} {4.7ft·lbf}

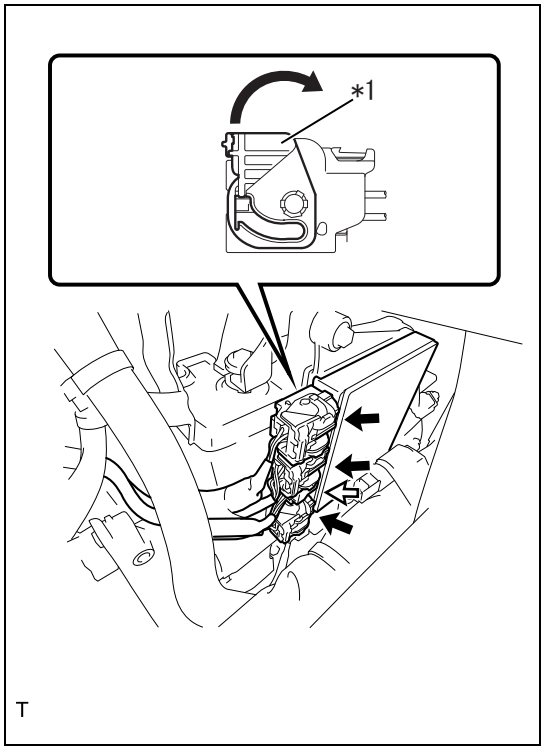

(2) Connect the three connectors with lock and normal connector to the injector driver and move the lock lever as shown in the figure to lock the three connectors with lock.

Captions in illustration

*1	Lock lever
➡	Connector with lock
⇨	Normal connector

CAUTION:
For connector with lock, connect the connector securely to lock it.

2. Connection of the battery ground terminal
Standard value:T=6.0N·m {61kgf·cm} {4.4ft·lbf}

Fuel pump ASSY (FA20)

Exploded view

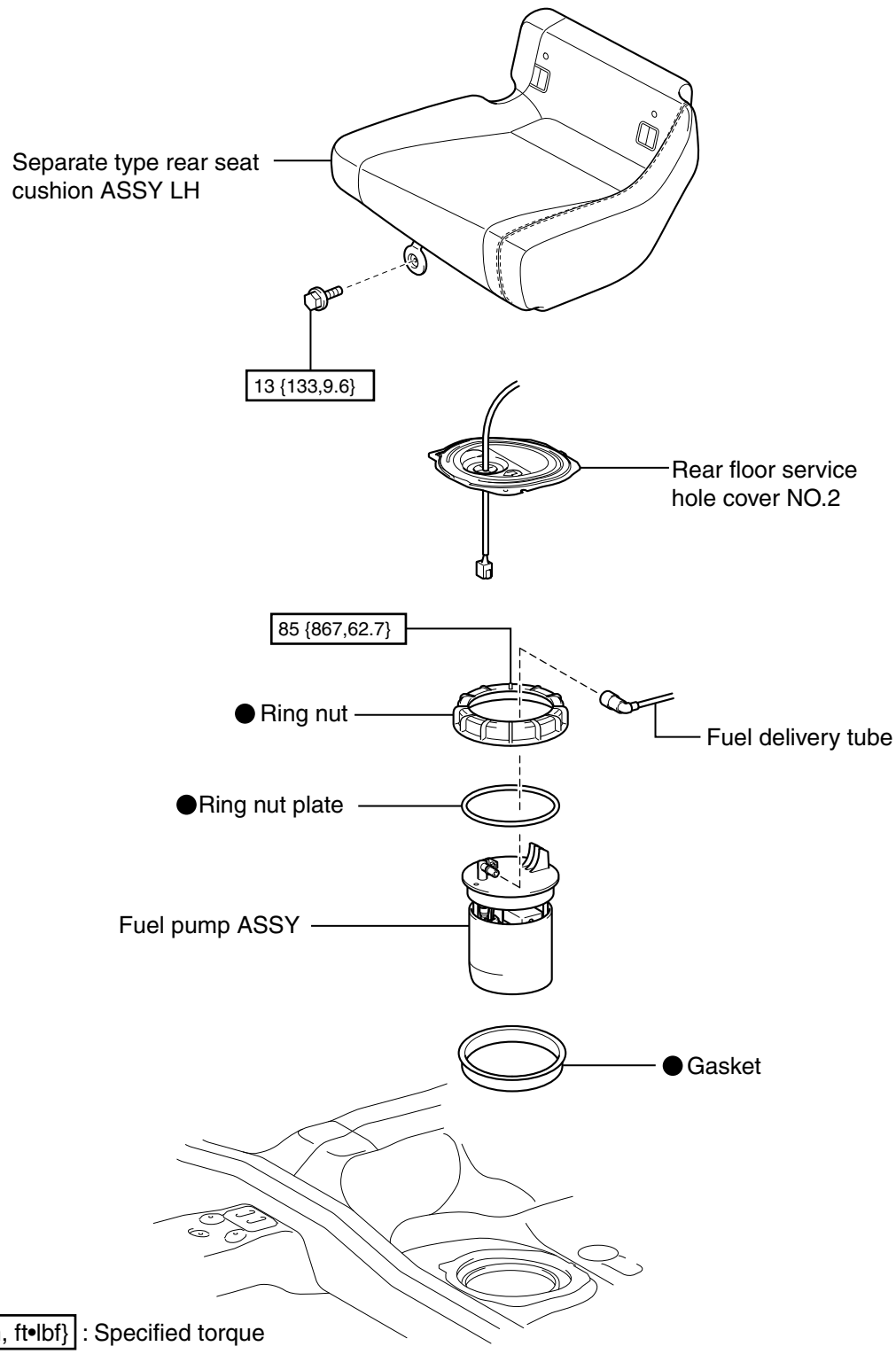

N•m {kgf•cm, ft•lbf} : Specified torque

● Non-reusable parts

FU-07439

FU

FU

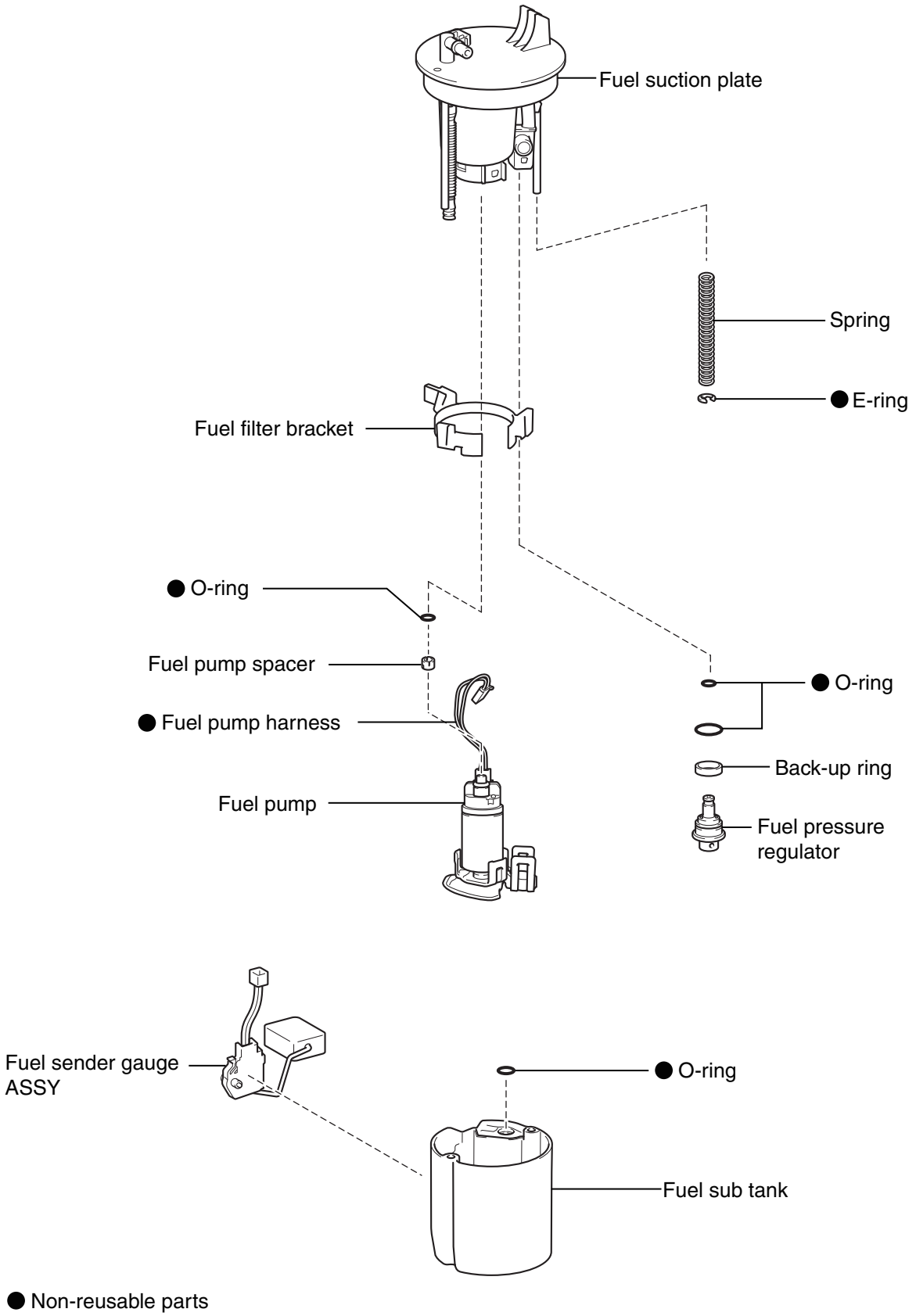
Fuel suction plate
Spring
● E-ring
Fuel filter bracket
● O-ring
Fuel pump spacer
● Fuel pump harness
Fuel pump
● O-ring
Back-up ring
Fuel pressure regulator
Fuel sender gauge ASSY
● O-ring
Fuel sub tank
● Non-reusable parts

FU-07394

Removal

CAUTION:

If the fuel gauge indicates that two thirds or more of the fuel is remaining, be sure to drain the fuel before starting the work to avoid the fuel to spill.

1. Fuel spill prevention procedure (Refer to FU - 3)
2. Fuel draining
   (1) If the fuel gauge indicates that two thirds or more of the fuel is remaining, drain the fuel according to the following procedure.
   WARNING:
   Vehicle components are extremely hot after driving. Be wary of receiving burns from heated parts.
   CAUTION:
   - Be careful not to spill fuel.
   - Fuel may remain in the fuel filler pipe. Drain the fuel from the fuel filler pipe through the fill opening using a gasoline proof pump and gasoline proof hose with a diameter of 10 mm {0.3937 in} or less before starting the work.

   (a)Remove the exhaust pipe ASSY CTR. (Refer to IE - 41)
   (b)Remove the exhaust tail pipe ASSY. (Refer to IE - 41)

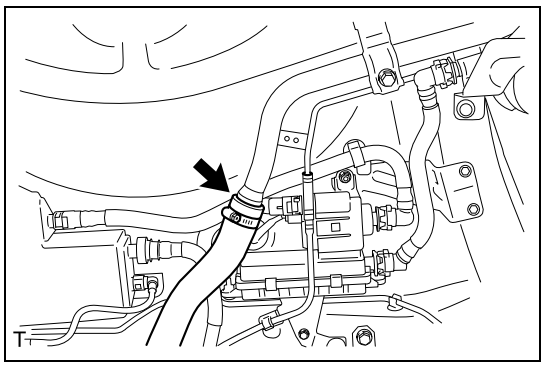

   (c)Loosen the hose clamp and disconnect the fuel tank to filler pipe hose.
   CAUTION:
   - Before starting the work, remove the foreign matters such as dirt on the fuel tank to filler pipe hose connection.
   - Be careful not to spill fuel.

   (d)Set a metal container under the vehicle and drain the fuel from the fuel tank to filler pipe hose opening using the gasoline proof hose with a diameter of 10 mm {0.3937 in} or less.
   CAUTION:
   Be careful not to spill fuel.
   NOTE:
   Always be sure to use a steel container and ground the container as gasoline can easily become charged with static electricity.
   (e)Install the fuel tank to filler pipe hose with the hose clamp.
   Standard value:T=2.0N·m {20kgf·cm} {1.5ft·lbf}
3. Disconnection of the battery ground terminal (Refer to IN - 6)
4. Removal of separate type rear seat cushion ASSY LH (Refer to SE - 31)

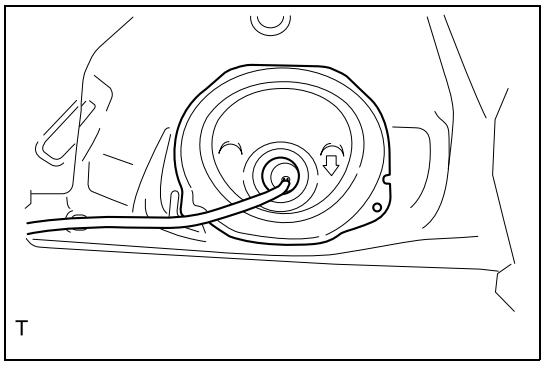

5. Rear floor service hole cover NO.2 removal
   (1) Push in the grommet to remove the rear floor service hole cover NO.2.
   (2) Remove the butyl tape and remove the rear floor service hole cover NO.2.

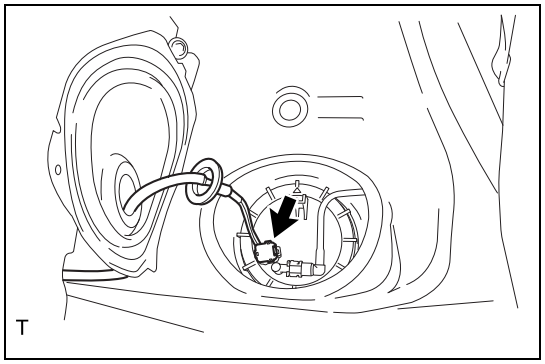

(3) Disconnect the fuel pump connector.

6. Fuel pump ASSY removal

(1) Disconnect the fuel delivery tube. (Refer to FU - 3)

CAUTION:

Be careful not to spill fuel.

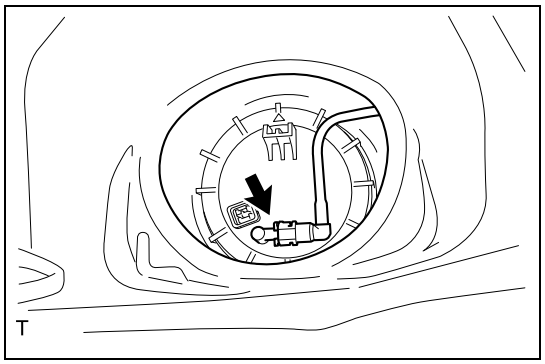

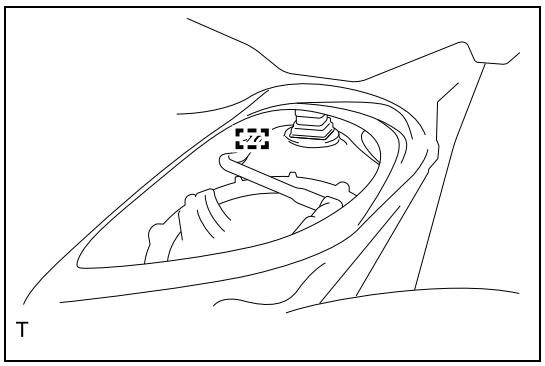

(a)Remove the fuel delivery pipe from the fuel tank.

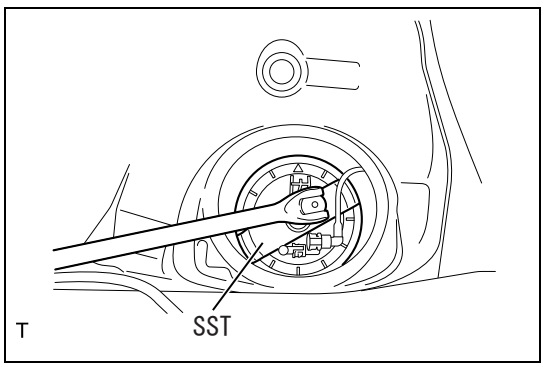

(2) Ring nut removal

(a)Use the SST to loosen the ring nut.

SST 42099CA000

CAUTION:

- Do not use any tools other than the SST.
- Be careful not to damage the tube with the SST.
- Before setting the SST, move the tube to a position outside the SST.

NOTE:

Insert the cutout portion of SST into the rib of ring nut to fix the SST securely.

(3) Remove the ring nut and ring nut plate while holding the fuel pump ASSY by hand.

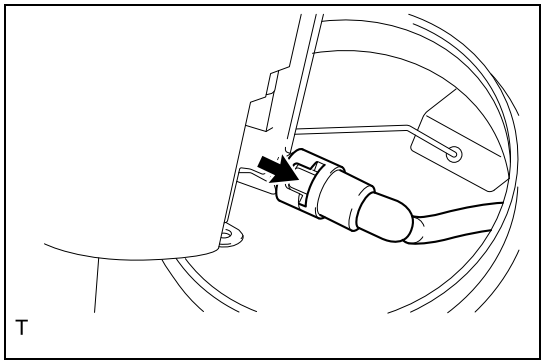
T

(4) Disconnect the fuel sub delivery tube and remove the fuel pump ASSY from the fuel tank.
CAUTION:
- When disconnecting the fuel sub delivery tube, do not pull the tube strongly.
- Do not bend the arm of fuel sender gauge ASSY.
- Do not turn the fuel pump ASSY in the fuel tank to prevent the arm of fuel sender gauge ASSY from bending.
- Be careful not to spill the fuel remaining in the fuel pump ASSY outside the fuel tank or in the vehicle.

(5) Remove the gasket from the fuel tank.

Disassembly

CAUTION:
Do not disconnect the press fit hoses of fuel pump ASSY shown in the figure.

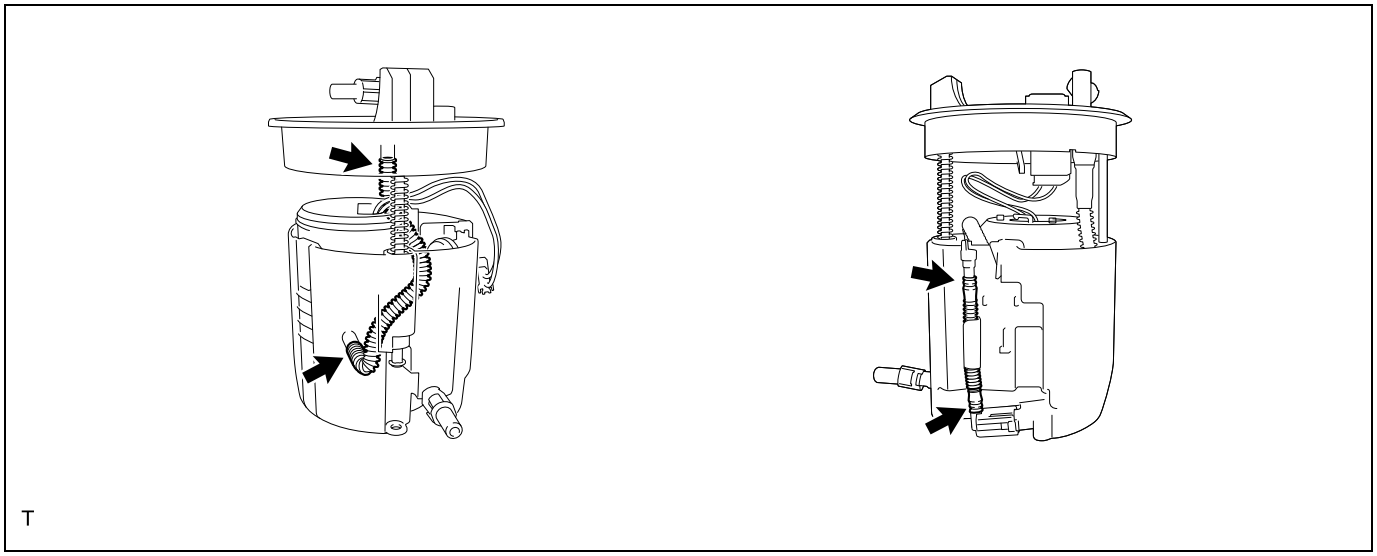
T

1. Fuel sender gauge ASSY removal (Refer to FU - 75)

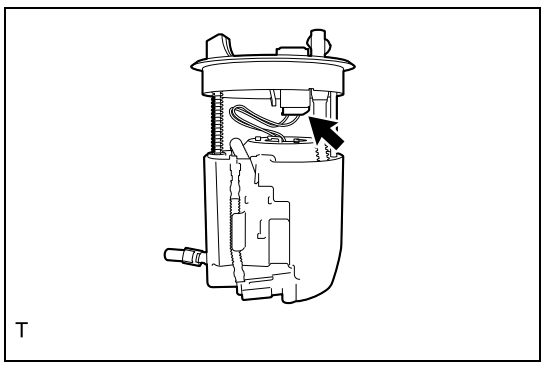
T

2. Fuel sub tank removal
(1) Disconnect the fuel pump harness connector.

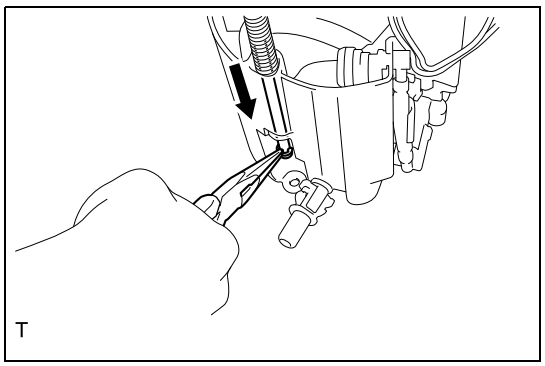
T

(2) Hold down the fuel suction plate in the direction of arrow shown the figure.
(3) Remove the E-ring.

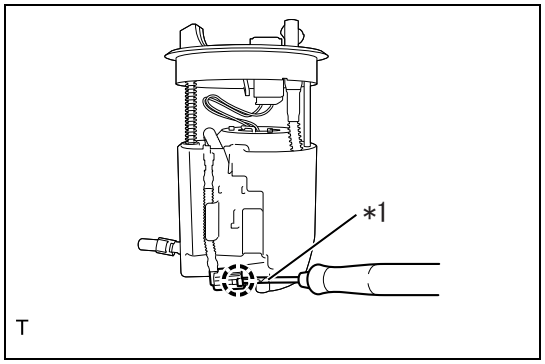

(4) Using a flat tip screwdriver wrapped with protective tape, release the claw and disconnect the jet pump nozzle.

Captions in illustration

*1	Protective tape

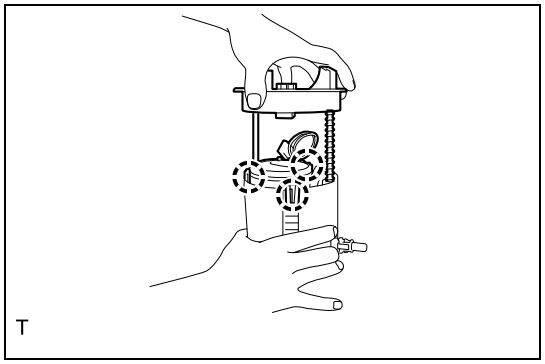

(5) Using a flat tip screwdriver wrapped with protective tape, release the three claws and pull out the fuel suction plate.
CAUTION:
Do not damage the fuel sub tank and fuel filter.

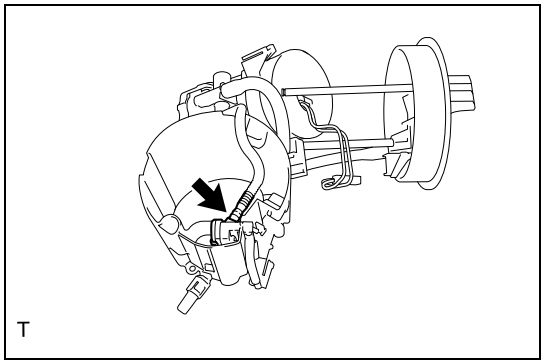

(6) Using a flat tip screwdriver wrapped with protective tape, release the claw and disconnect the jet pump.

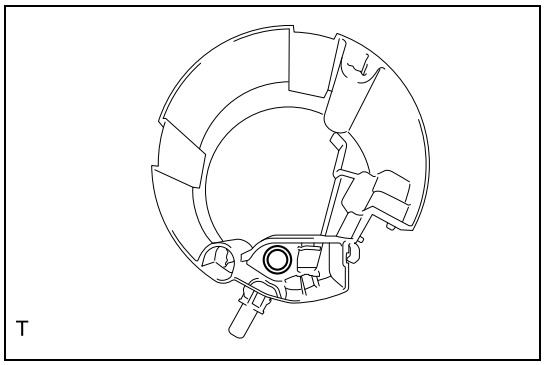

(7) Remove the O-ring from the fuel sub tank.

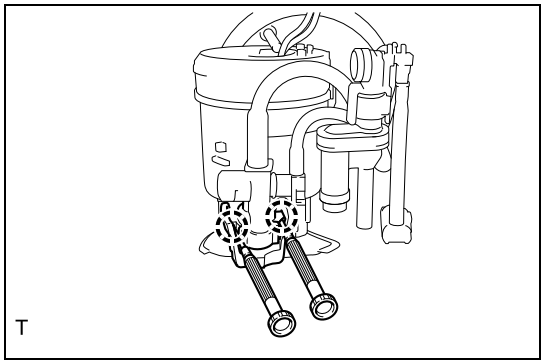
T

3. Fuel pump removal
   (1) Release the two claws using a flat tip screwdriver wrapped with protective tape.

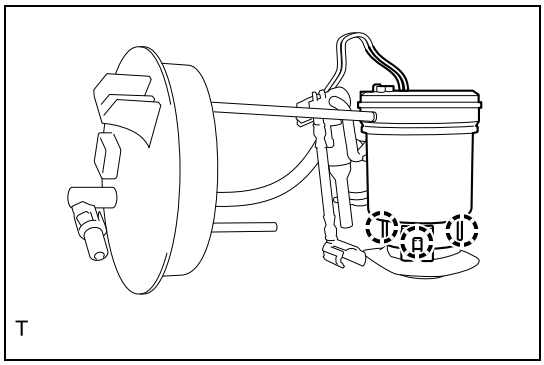
T

   (2) Using a flat tip screwdriver wrapped with protective tape, release the three claws and pull the fuel pump straight out.
   CAUTION:
   Do not damage the fuel pump and fuel filter.

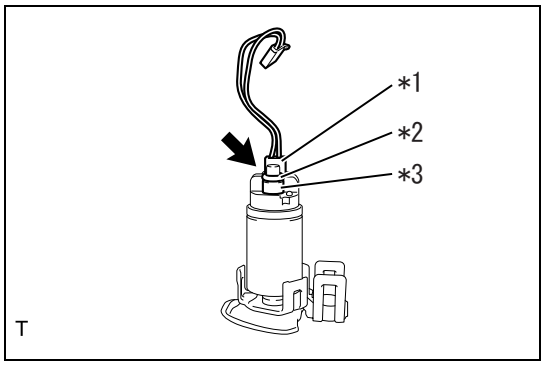

T

   (3) Disconnect the connector and remove the fuel pump harness.
   (4) Remove the O-ring and spacer from the fuel pump.

Captions in illustration

*1	Fuel pump harness
*2	O-ring
*3	Spacer

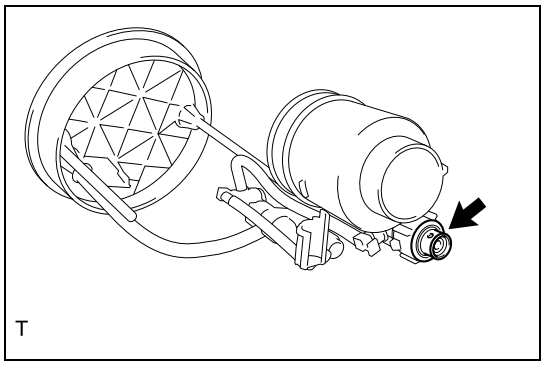
T

4. Fuel pressure regulator removal
   (1) Remove the fuel pressure regulator from the fuel pump.

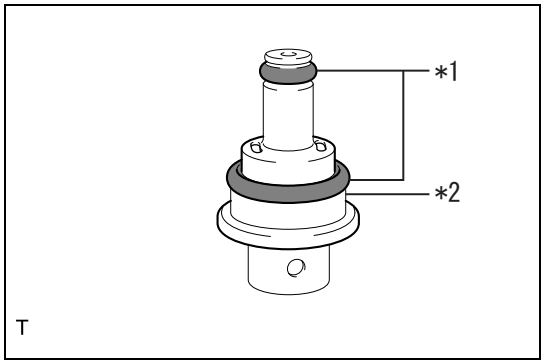

(2) Remove the two O-rings and back-up ring from the fuel pressure regulator.

Captions in illustration

*1	O-ring
*2	Back-up ring

Assembly

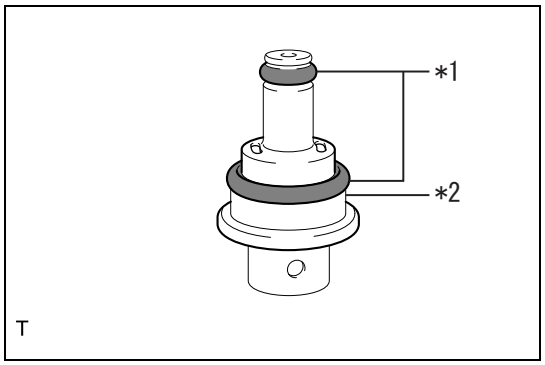

1. Fuel pressure regulator installation
   (1) Apply gasoline to two new O-rings and back-up ring, and then install them to the fuel pressure regulator.

Captions in illustration

*1	O-ring
*2	Back-up ring

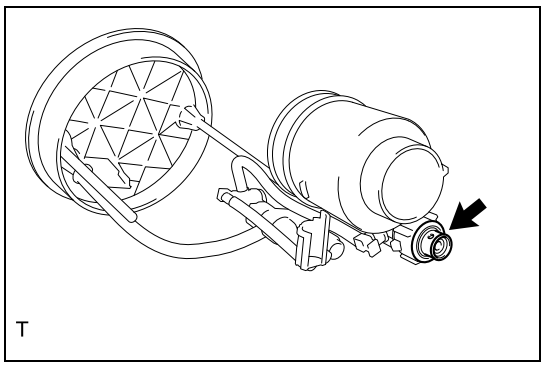

(2) Install the fuel pressure regulator to the fuel filter.
CAUTION:
Install it so that the O-ring is not cut or pinched.

2. Fuel pump installation
   (1) Attach the spacer and a new O-ring to the fuel pump.

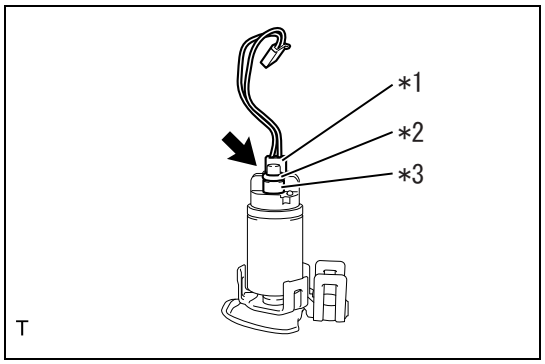

(2) Connect the connector and connect a new fuel pump harness.

Captions in illustration

*1	Fuel pump harness
*2	O-ring
*3	Spacer

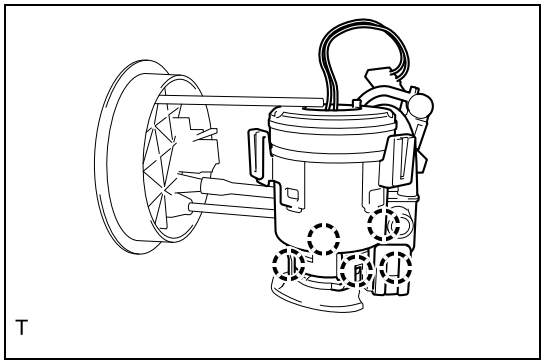
T

(3) Apply a coat of gasoline to the O-ring and install the fuel pump to the fuel filter.
CAUTION:
Install it so that the O-ring is not cut or pinched.

3. Fuel sub tank installation
(1) Set the fuel suction plate on the fuel sub tank through the spring.

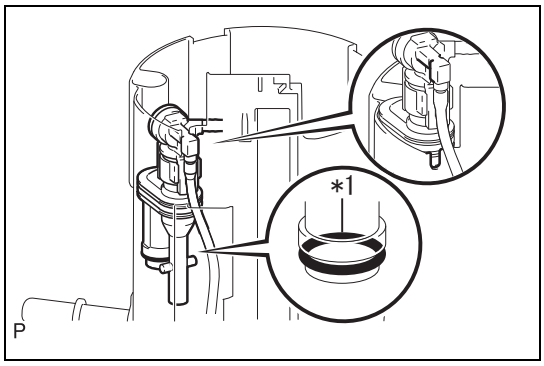

P

(2) Apply a coat of gasoline to a new O-ring and install it to the jet pump.

Captions in illustration

*1	O-ring

(3) Install the jet pump to the fuel sub tank.
CAUTION:
- Install it so that the O-ring is not cut or pinched.
- Be sure to engage the claw.

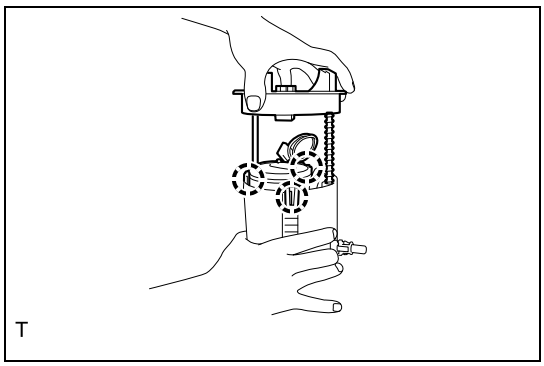
T

(4) Engage the three claws and install the fuel filter to the fuel sub tank.

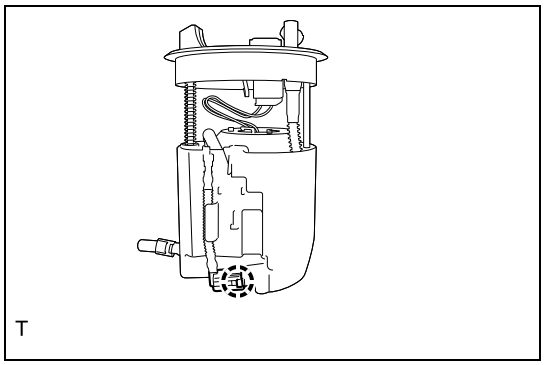
T

(5) Engage the claw and install the jet pump nozzle to the fuel sub tank.

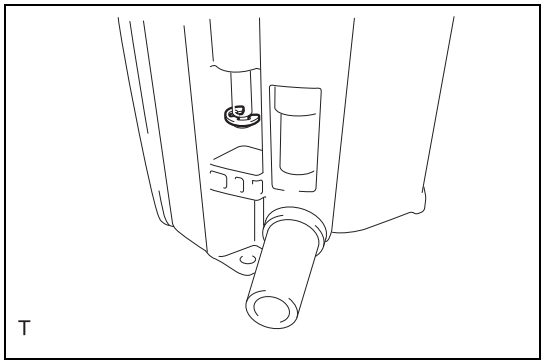

(6) Install a new E-ring.



(7) Connect the fuel pump harness connector and install the harness to the four clamps.

4. Fuel sender gauge ASSY installation (Refer to FU - 78)

Installation

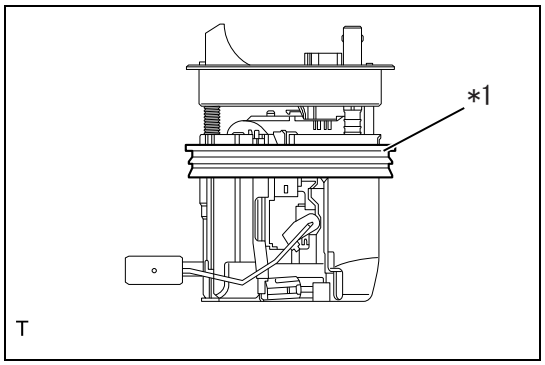

1. Fuel pump ASSY installation
   (1) Install a new gasket to the fuel pump ASSY.

Captions in illustration

*1	Gasket

(2) Connect the fuel sub delivery tube.
CAUTION:
- When connecting the fuel sub delivery tube, do not pull the tube strongly .
- Do not bend the arm of fuel sender gauge ASSY.

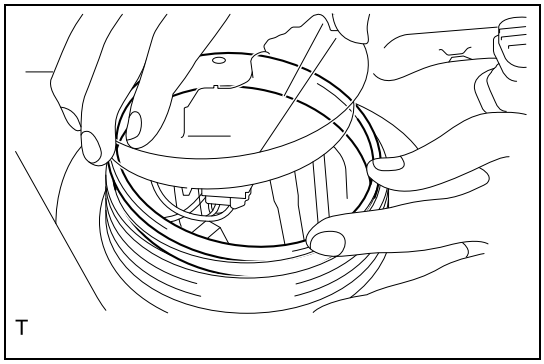

(3) Insert the fuel pump ASSY into the fuel tank and install the new gasket, which was installed to the fuel pump ASSY earlier, to the fuel tank.

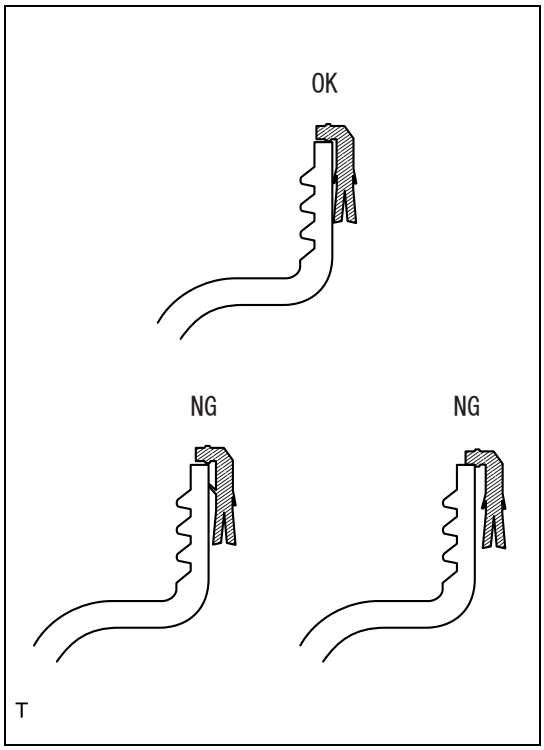

CAUTION:
Improper installation such as warpage, slip, etc. results in fuel leakage. Make sure that there is no warpage, slip, etc. in the entire circumference when installing the gasket to the fuel tank.

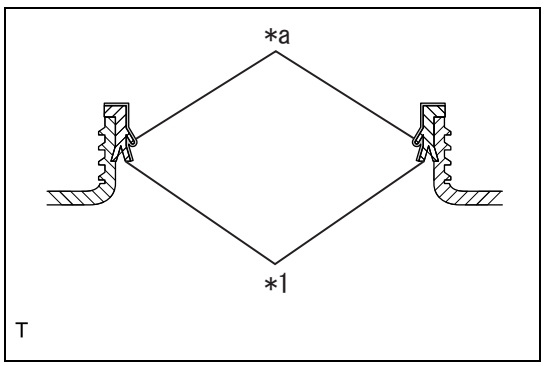

(4) Apply gasoline to the gasket.

Captions in illustration

*1	Gasket
*a	Areas of gasoline application

CAUTION:
- When applying gasoline to the gasket, apply it to the area as shown in the figure.
- Be careful that no gasoline comes into contact with the threaded portion of fuel tank.
- Make sure that there is no fuel, foreign matter, etc. on the sealing portion.

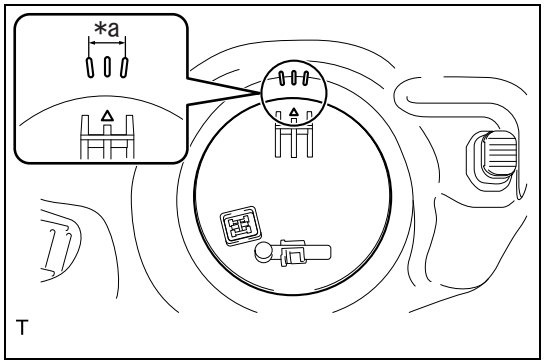

(5) Set the fuel pump ASSY in the installation position range mark of fuel tank.

Captions in illustration

*a	Installation position range mark

(6) Install a new ring nut plate and ring nut, and then temporarily tighten the ring nut.

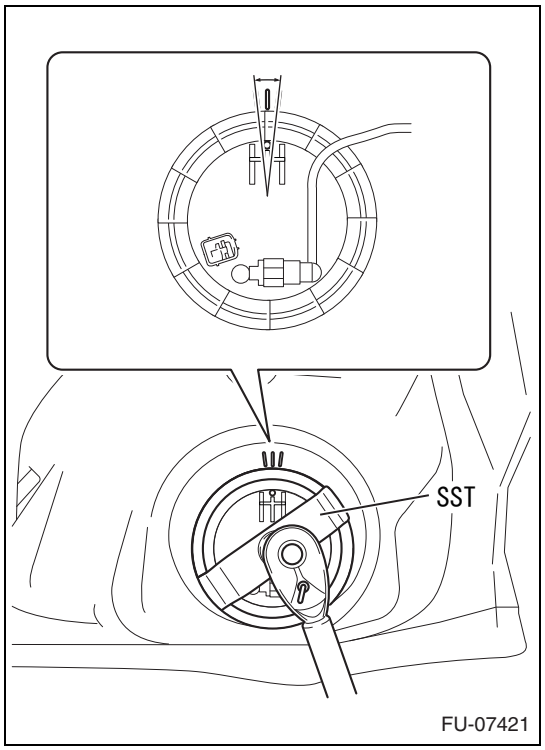

(7) Tighten the ring nut using the SST.
SST 42099CA000
Standard value:T=85N·m {867kgf·cm} {62.7ft·lbf}
CAUTION:
- Do not use any tools other than the SST.
- Be careful not to damage the tube with the SST.
- Before setting the SST, move the tube to a position outside the SST.
- Make sure that the position mark on the fuel pump ASSY is located within the installation position range mark on the fuel tank as shown in the figure.
- After tightening to the specified torque, confirm the tightening by tightening it to the specified torque again.

NOTE:
Insert the cutout portion of SST into the rib of ring nut to fix the SST securely.

(8) Connect the fuel delivery tube. (Refer to FU - 3)
(9) Install the fuel delivery tube to the fuel tank. (Refer to FU - 3)
(10) Connect the fuel pump connector.

2. Connection of the battery ground terminal
Standard value:T=6.0N·m {61kgf·cm} {4.4ft·lbf}

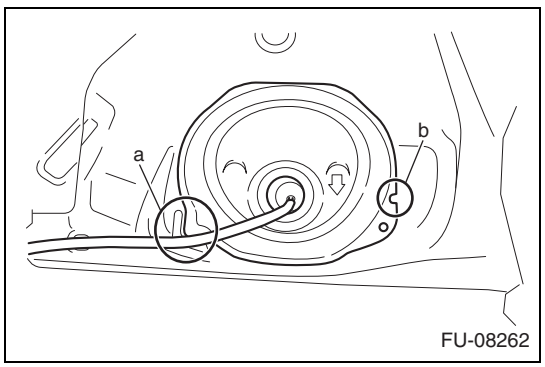

3. Rear floor service hole cover NO.2 installation
(1) Install the rear floor service hole cover NO.2 using new butyl tape.
NOTE:
(a) Align the flange of the rear floor service hole cover No. 2 to the corner bead on the floor.
(b) Align the cutout for the rear floor service hole cover No. 2 to the floor protrusion.
(2) Install the grommet to the rear floor service hole cover NO.2.

4. Separate type rear seat cushion ASSY LH installation (Refer to SE - 39)

Unit inspection

1. Fuel pump check
(1) Resistance check
(a)Measure the resistance between the terminals.

Inspection terminals	Inspection conditions	Standard value
3 - 4	20°C{68°F}	0.2 to 3.0 Ω

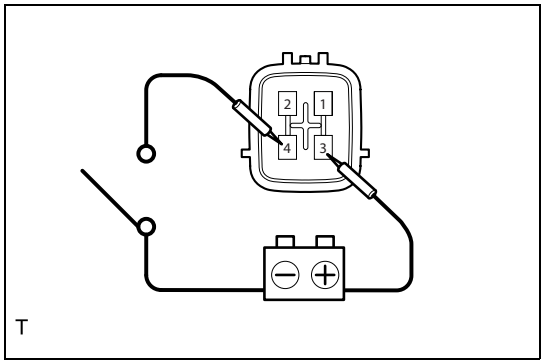

(2) Operation check

(a)Apply the battery voltage between the terminals and check the motor operation.

CAUTION:

- Drain the fuel completely.
- Perform the check in a short period of time (10 sec. or less).
- Place the fuel pump as far apart as possible from the battery.

Fuel pump ASSY (FA20 / high fuel pressure)

Exploded view

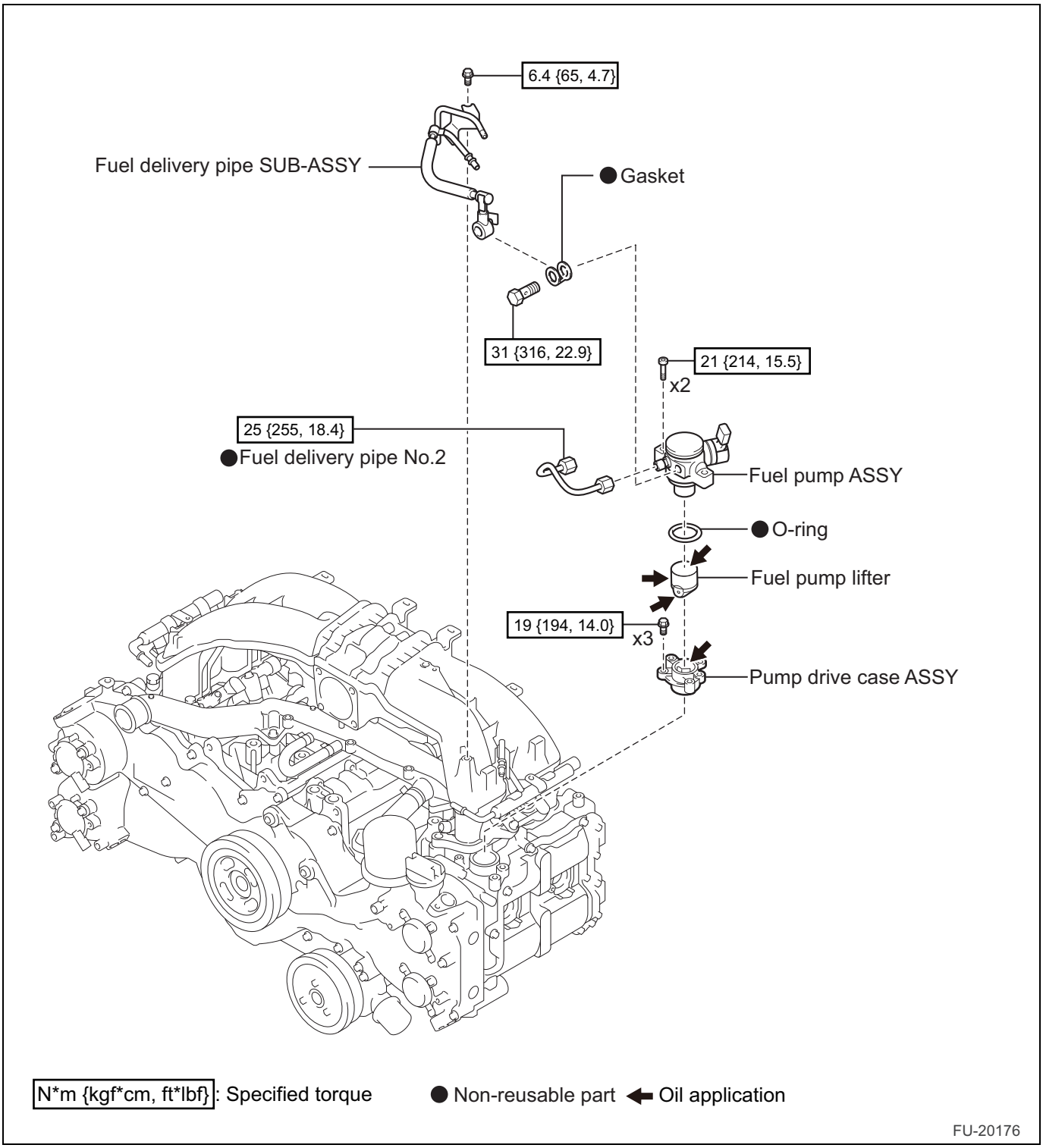

Removal

1. Intake manifold removal
   (Refer to IE - 17)
2. Fuel delivery pipe NO.2 removal (Refer to FU - 31)

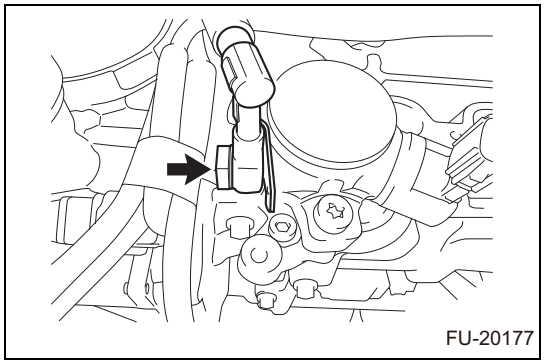
FU-20177

3. Disconnection of fuel delivery pipe SUB-ASSY
   (1) Remove the union bolt and gasket to disconnect the fuel delivery pipe SUB-ASSY.

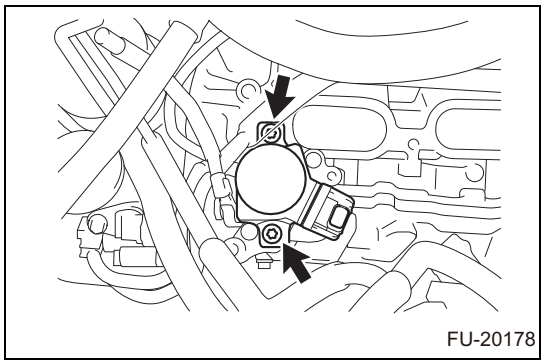
FU-20178

4. Fuel pump ASSY removal
   (1) Remove the two bolts with a TORX PLUS socket wrench 40IP to remove the fuel pump ASSY.

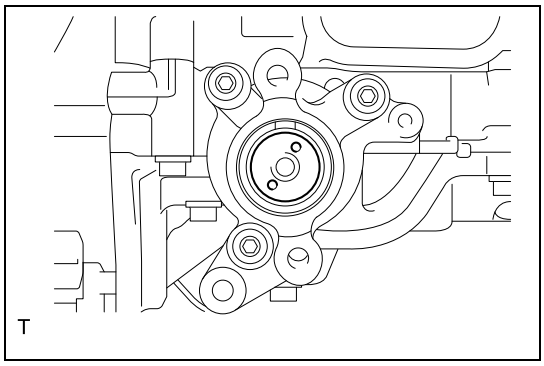
T

5. Fuel pump lifter removal
   (1) Remove the fuel pump lifter from the pump drive case ASSY.

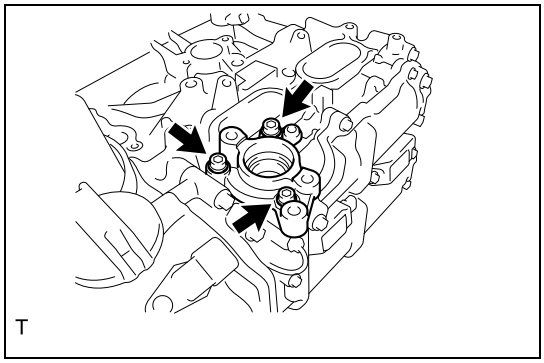
T

6. Pump drive case ASSY removal
   (1) Remove the three bolts and remove the pump drive case ASSY.

Installation

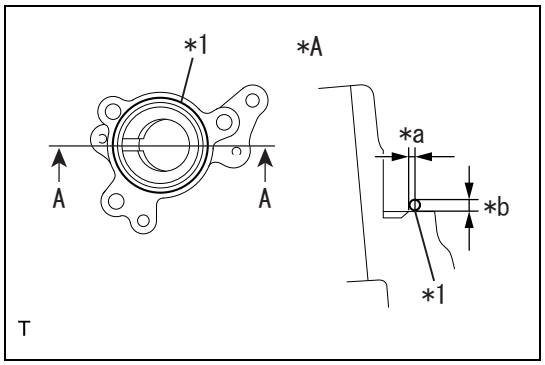

1. Pump drive case ASSY installation
   (1) Apply THREE BOND 1217G/1217H or equivalent to the mating surface of pump drive case ASSY.
   Install the pump drive case ASSY with the three bolts.
   Standard value:T=19N·m {194kgf·cm} {14.0ft·lbf}
   CAUTION:
   - Do not allow the liquid gasket to accumulate in the oil passage in the pump drive case ASSY.
   - Install within 5 min. after applying liquid gasket.
   - Do not fill the engine oil within 2 hours after the installation.
   - Do not start the engine within 2 hours after the installation.

Captions in illustration

*A	Section A - A
*1	THREE BOND 1217G/1217H or equivalent
*a	Liquid gasket application position: Within 1 mm {0.0394 in} from the edge
*b	Diameter of liquid gasket: 2 to 4 mm {0.0787 to 0.1575 in}

2. Fuel pump lifter installation
   (1) Turn the crankshaft until the flat surface of cam faces upward from the fuel pump ASSY installation hole of cam cap.
   NOTE:
   When installing the fuel pump ASSY, since the cam convex section does not push up the pump drive surface due to the work above, the fuel pump ASSY and fuel delivery pipe NO.2 can be installed easily.
   (2) Apply new engine oil to the pump drive cam and fuel pump lifter portion.

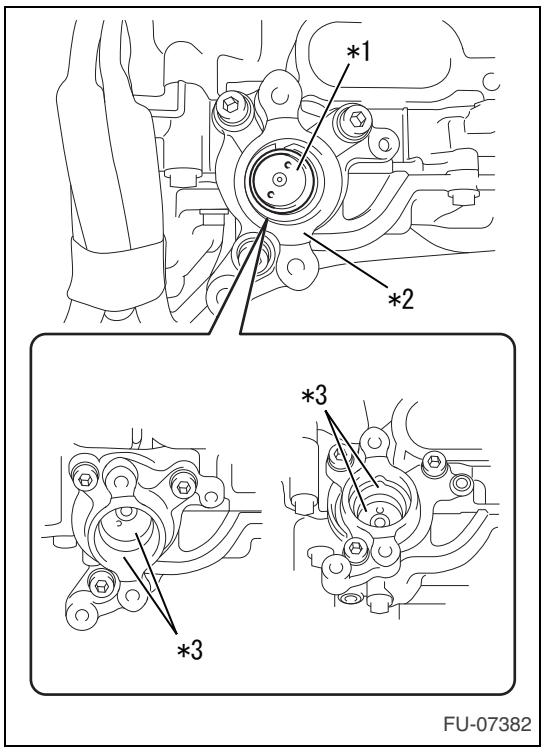

   (3) Apply new engine oil to the pump drive case ASSY side surface and fuel pump lifter bottom surface, and then install the fuel pump lifter to the pump drive case ASSY.

Captions in illustration

*1	Fuel pump lifter
*2	Pump drive case ASSY
*3	New engine oil application areas (side of pump drive case ASSY, bottom of fuel pump lifter, roller)

3. Fuel pump ASSY installation
   (1) Install a new O-ring to the fuel pump ASSY.
   (2) Install the fuel pump ASSY with the two bolts using a TORX PLUS socket wrench 40IP.
   Standard value:T=21N·m {214kgf·cm} {15.5ft·lbf}
   (3) Connect the fuel pump connector.
4. Fuel delivery pipe SUB-ASSY connection
   (1) Connect the fuel delivery pipe SUB-ASSY with a new gasket and the union bolt.
   Standard value:T=31N·m {316kgf·cm} {22.9ft·lbf}

FU

5. Fuel delivery pipe NO.2 connection (Refer to FU - 38)
6. Intake manifold installation
   (Refer to IE - 28)

Unit inspection

1. Fuel pump ASSY check
   (1) Visual inspection
      (a)Check that the fuel pump ASSY has no deformation, cracks or other damages.

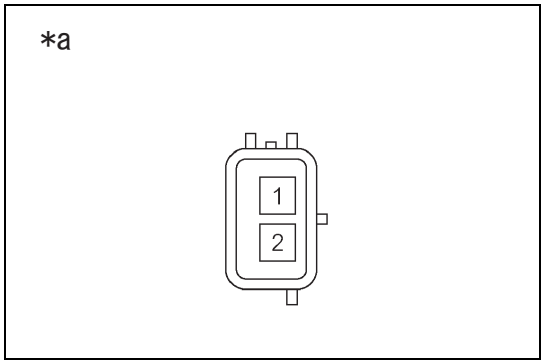

   (2) Resistance check
      (a)Measure the resistance between the fuel pump (high pressure side) terminals.
      Resistance

Inspection terminals	Inspection conditions	Standard value
1 - 2	20°C{68°F}	0.45 to 0.55 Ω

Captions in illustration

*a	Connector not connected (Fuel pump ASSY)

Fuel pump control computer (FA20)

Exploded view

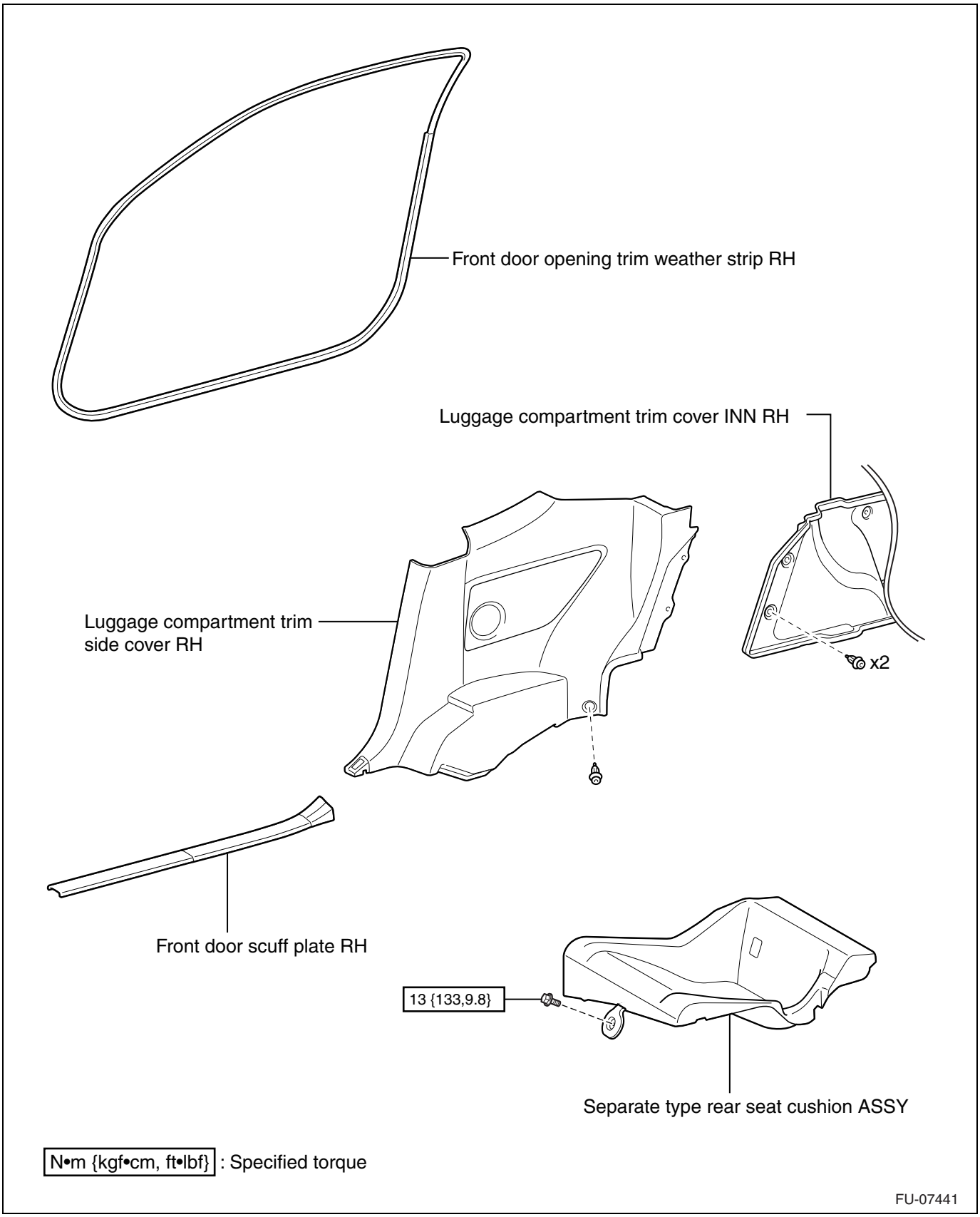

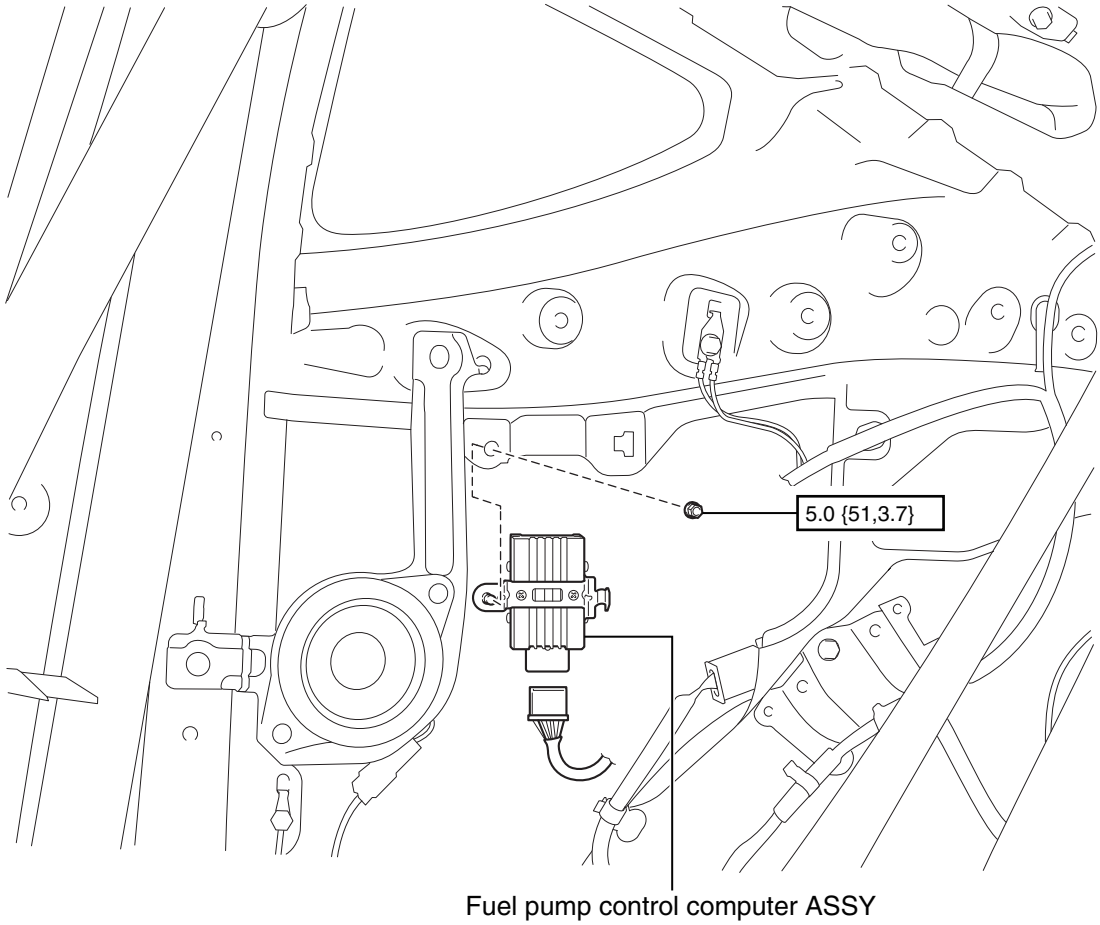

N•m {kgf•cm, ft•lbf} : Specified torque

FU-07442

Removal

1. Disconnection of the battery ground terminal (Refer to IN - 6)
2. Disconnection of front door opening trim weather strip RH (Refer to IT - 48)
3. Removal of the front door scuff plate RH (Refer to IT - 49)
4. Removal of separate type rear seat cushion ASSY (Refer to SE - 31)
5. Removal of luggage compartment trim cover INN RH (Refer to IT - 48)
6. Removal of luggage compartment trim side cover RH (Refer to IT - 49)

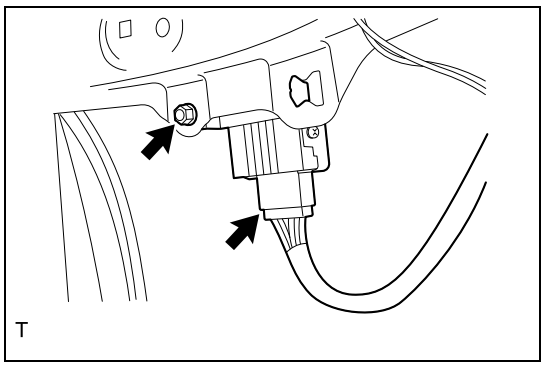

7. Removal of fuel pump control computer ASSY
   (1) Disconnect the fuel pump control computer connector.
   (2) Remove the nut.

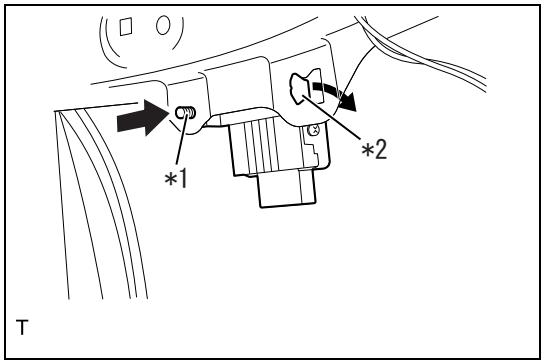

(3) Push in the stud bolt of fuel pump control computer ASSY.

Captions in illustration

*1	Stud bolt
*2	Bracket

(4) Slide the fuel pump control computer ASSY toward the rear of the vehicle to disengage the bracket and remove the fuel pump control computer ASSY.
CAUTION:
If impact is applied to the fuel pump control computer ASSY, do not reuse it.

Installation

FU

1. Installation of fuel pump control computer ASSY
   (1) Engage the bracket of fuel pump control computer ASSY to the body mounting hole and pass the stud bolt through the body hole.
   (2) Install the fuel pump control computer ASSY with the nut.
   Standard value:T=5.0N·m {51kgf·cm} {3.7ft·lbf}
   CAUTION:
   If impact is applied to the fuel pump control computer ASSY, do not reuse it.
   (3) Connect the fuel pump control computer connector.
2. Installation of luggage compartment trim side cover RH (Refer to IT - 58)
3. Installation of luggage compartment trim cover INN RH (Refer to IT - 58)
4. Installation of separate type rear seat cushion ASSY (Refer to SE - 39)
5. Installation of the front door scuff plate RH (Refer to IT - 58)
6. Installation of the front door opening trim weather strip RH (Refer to IT - 58)
7. Installation of battery ground terminal
   Standard value:T=6.0N·m {61kgf·cm} {4.4ft·lbf}

Fuel tank ASSY (FA20)

Exploded view

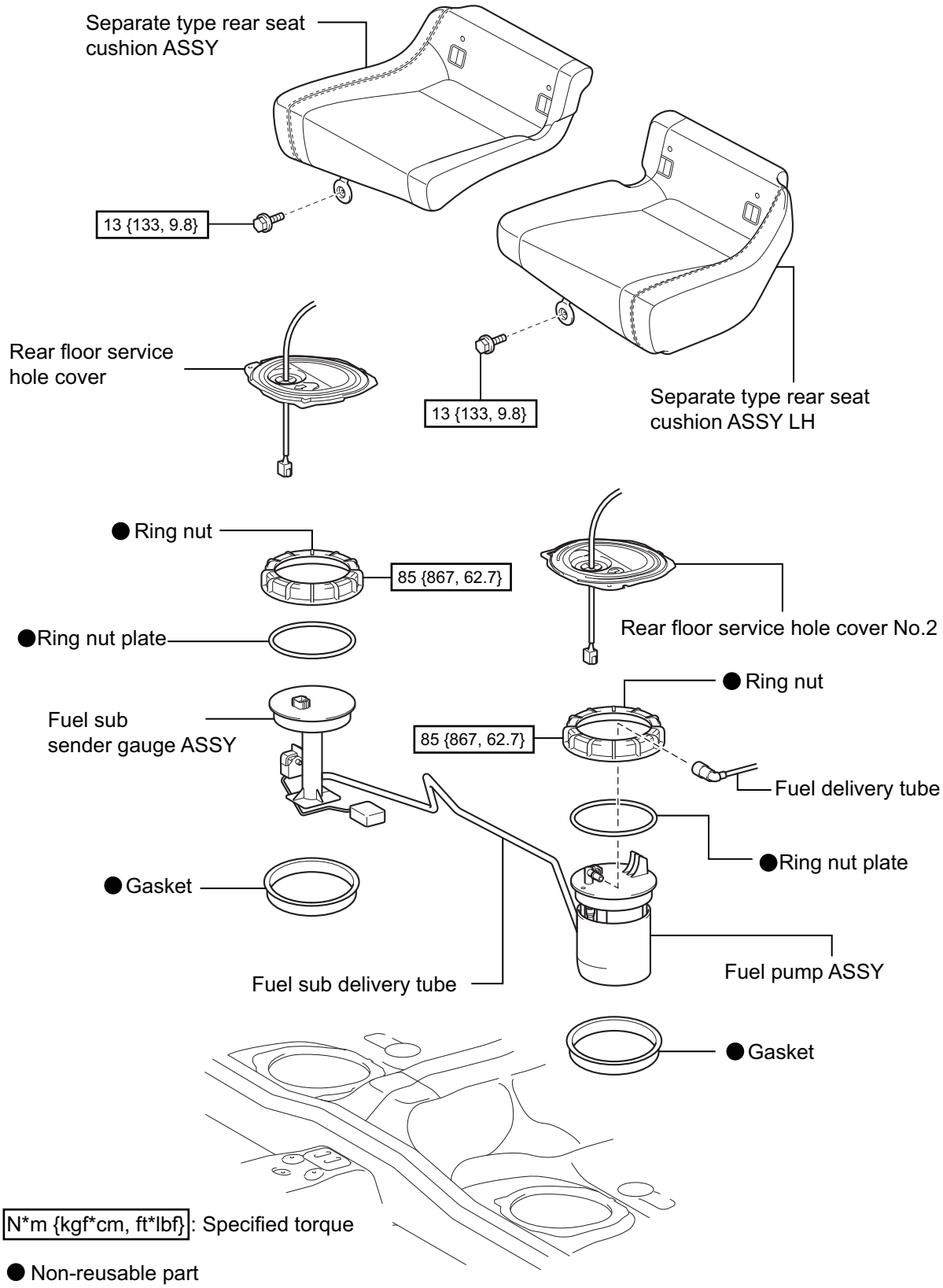

FU

FU

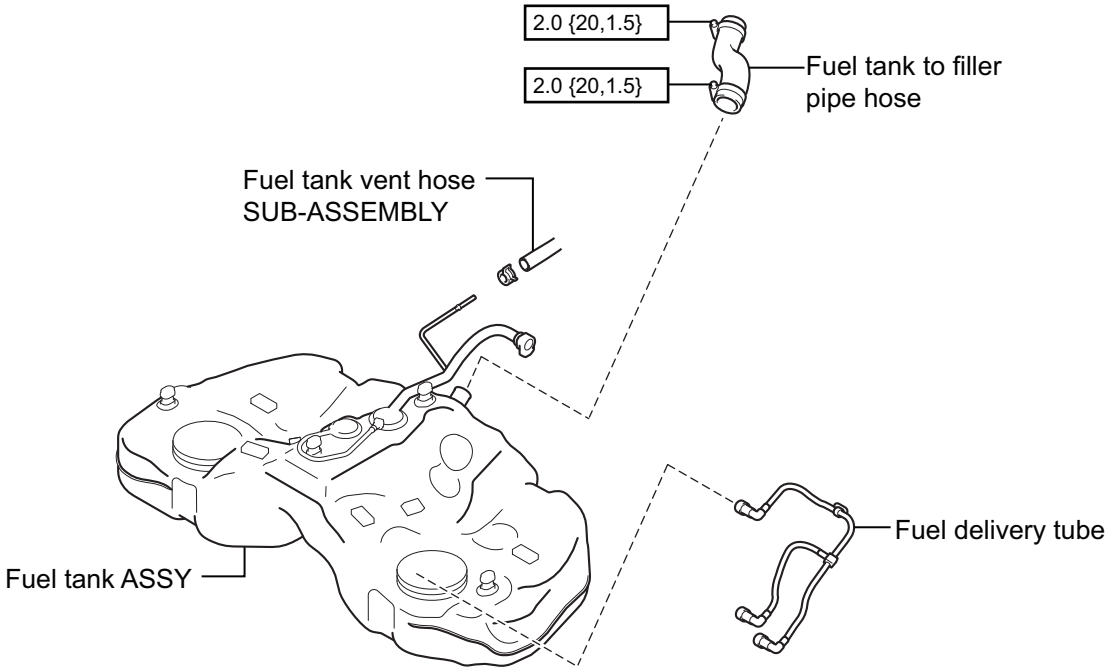

Small fuel tank protector model:

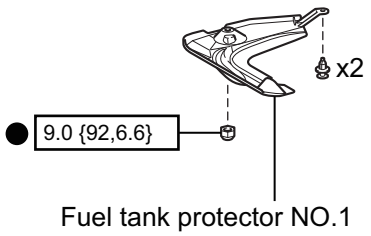

Large fuel tank protector model:

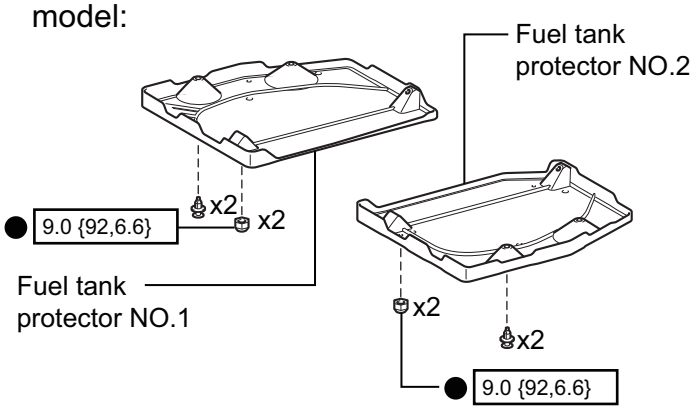

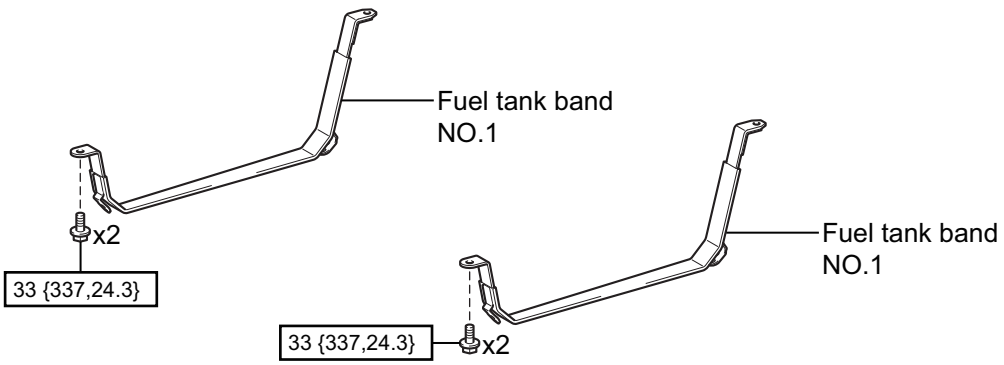

N*m {kgf*cm,ft*lbf} : Specified torque ● Non-reusable parts

FU-20720

Removal

1. Fuel spill prevention procedure (Refer to FU - 3)
2. Draining of fuel (Refer to FU - 47)
3. Disconnection of the battery ground terminal (Refer to IN - 6)
4. Removal of separate type rear seat cushion ASSY RH (Refer to SE - 31)
5. Removal of separate type rear seat cushion ASSY LH (Refer to SE - 31)

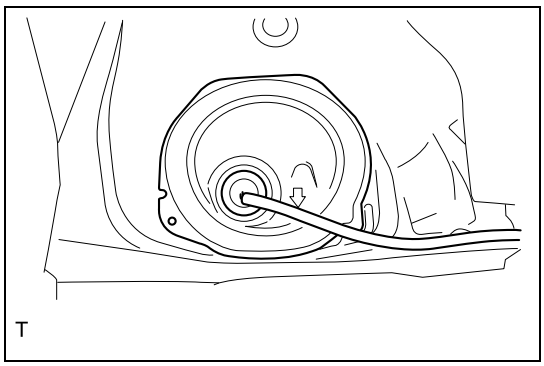

6. Rear floor service hole cover removal
   (1) Push in the grommet to remove the grommet from the rear floor service hole cover.
   (2) Remove the butyl tape and remove the rear floor service hole cover.

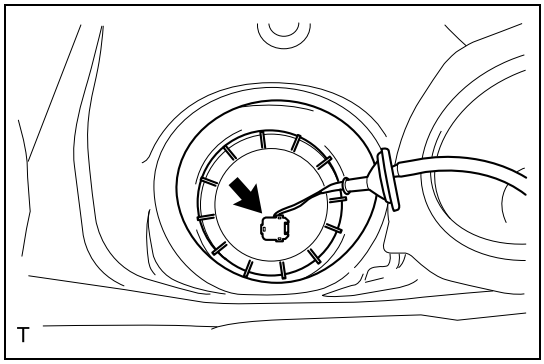

   (3) Disconnect the fuel sub sender gauge connector.

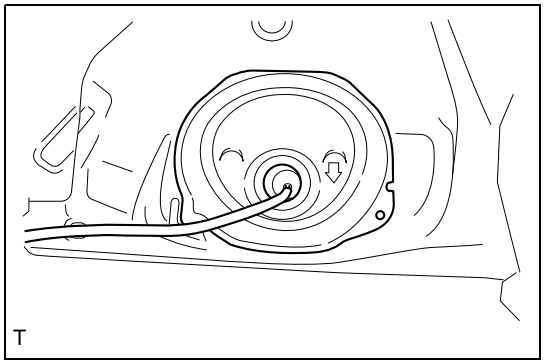

7. Rear floor service hole cover NO.2 removal
   (1) Push in the grommet to remove the grommet from the rear floor service hole cover NO.2.
   (2) Remove the butyl tape and remove the rear floor service hole cover NO.2.

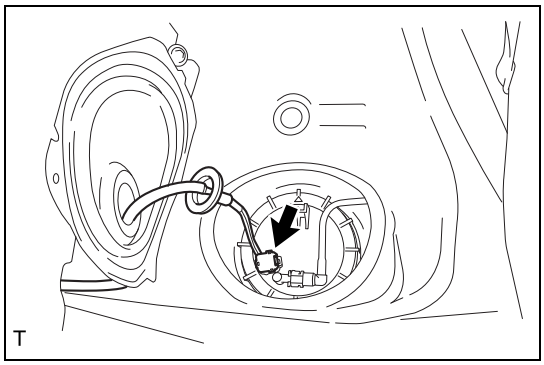

   (3) Disconnect the fuel pump connector.

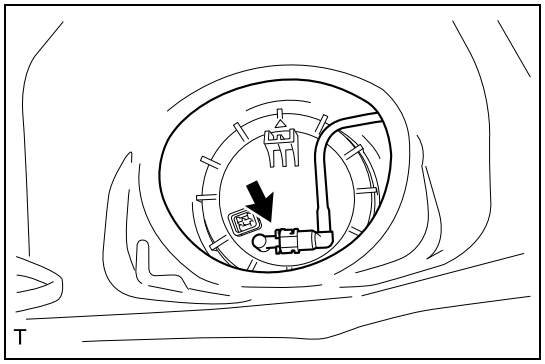

(4) Disconnect the fuel delivery tube. (Refer to FU - 3)
CAUTION:
Be careful not to spill fuel.

8. Removal of rear suspension member SUB-ASSY (Refer to RP - 33)

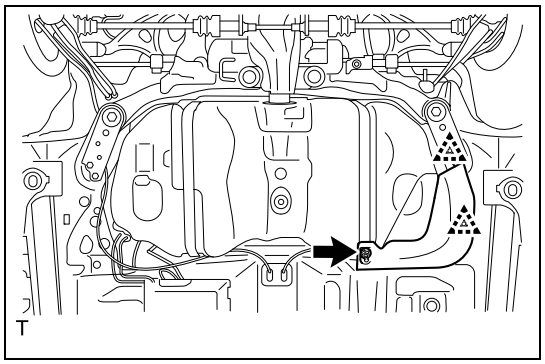

9. Removal of the fuel tank protector (small fuel tank protector model)
(1) Remove the nut and two clips and remove the fuel tank protector.

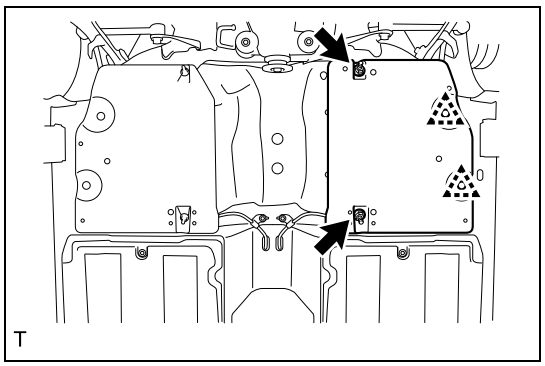

10. Removal of the fuel tank protector NO.1 (large fuel tank protector model)
(1) Remove the 2 nuts and the 2 clips and remove the fuel tank protector NO.1.

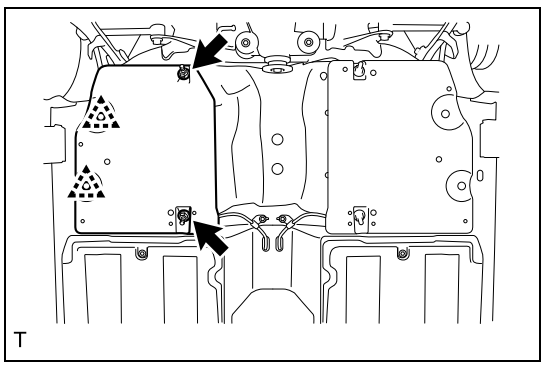

11. Removal of the fuel tank protector NO.2 (large fuel tank protector model)
(1) Remove the 2 nuts and the 2 clips and remove the fuel tank protector NO.2.

12. Parking brake cable ASSY NO.3 removal (Refer to PB - 11)
13. Parking brake cable ASSY NO.2 removal (Refer to PB - 12)

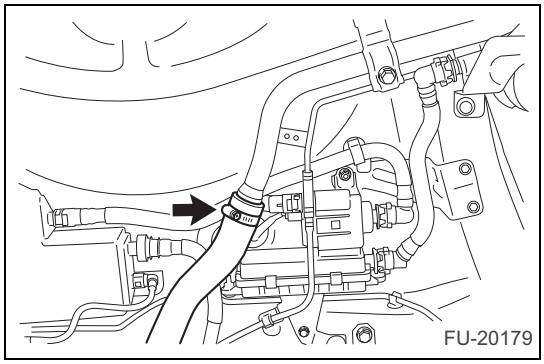

14. DISCONNECT FUEL TANK TO FILLER PIPE HOSE
    (1) Loosen the hose clamp bolt and disconnect the fuel tank to filler pipe hose.

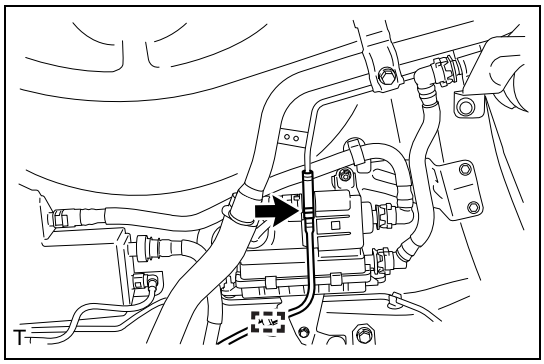

15. DISCONNECT FUEL TANK VENT HOSE SUBASSEMBLY
    (1) Remove the clamp and disconnect the fuel tank vent hose subassembly.
    (2) Disengage the clamp and separate the tube.

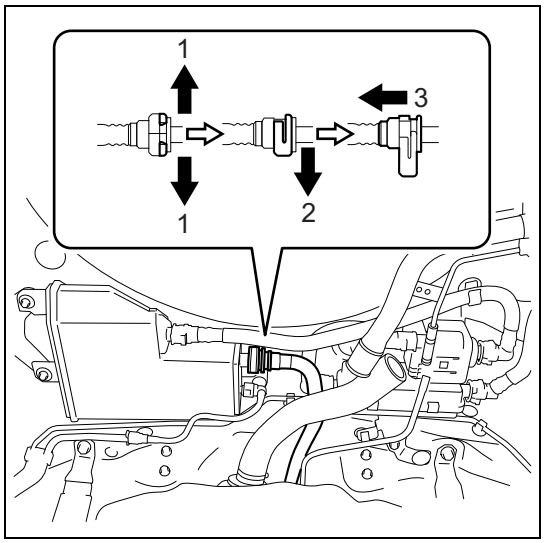

16. SEPARATE CHARCOAL CANISTER ASSEMBLY
    (1) Disconnect the fuel tank vent tube as indicated by the arrows in the order shown in the illustration.

17. Fuel tank ASSY removal

CAUTION:

- Two persons are required to perform this procedure.
- The fuel may remain in the fuel tank and this may cause the left and right sides to be unbalanced. Be careful not to let the fuel tank ASSY fall off.

(1) Hold the fuel tank with the transmission jack.

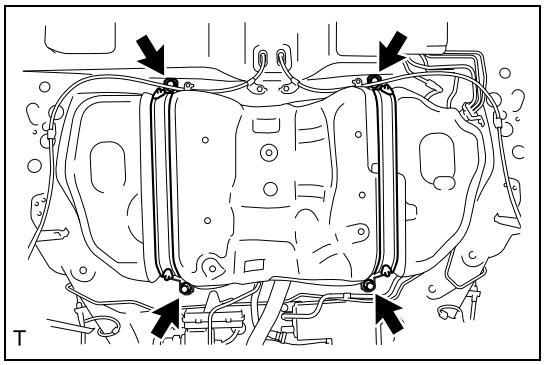

(2) Remove the four bolts and remove the fuel tank band NO.1.

(3) Lower the transmission jack to remove the fuel tank ASSY.

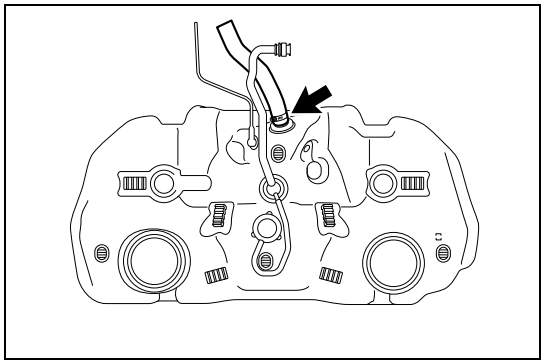

18. REMOVE FUEL TANK TO FILLER PIPE HOSE
    (1) Loosen the hose clamp bolt and remove the fuel tank to filler pipe hose from the fuel tank.

Installation

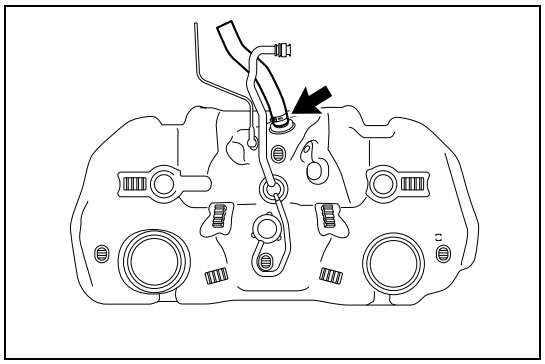

1. INSTALL FUEL TANK TO FILLER PIPE HOSE
    (1) Install the fuel tank to filler pipe hose to the fuel tank assembly with the clamp.
    (2) Tighten the hose clamp bolt.
    Standard value:T=2.0N·m {20kgf·cm} {18.0ft·lbf}

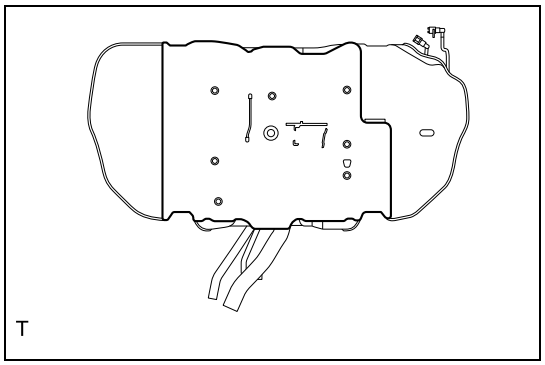

2. Fuel tank ASSY installation
    (1) Check the fuel tank cover.
    NOTE:
    As the fuel tank cover is used as a guide when installing the fuel tank ASSY, check for deformation, cracks, and other damages. If there is any problem, replace it with a new part
    (2) Hold the fuel tank ASSY with the transmission jack.
    (3) Temporarily install the fuel tank ASSY to the body with the two fuel tank bands NO.1 and four bolts.

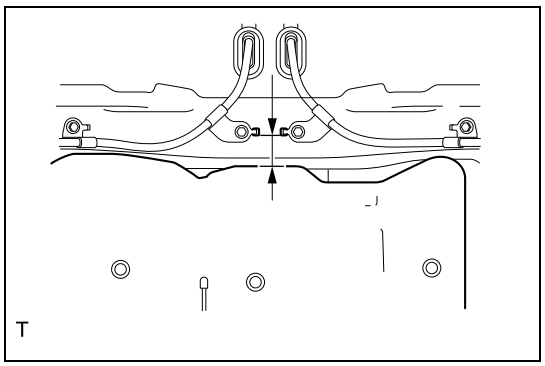

    (4) Adjust the fuel tank ASSY position so that the distance from the arrest hole of parking brake cable fixing bracket to the front edge of fuel tank cover is within the standard value.
    Standard value: 42 to 44 mm {1.6535 to 1.7327 in}

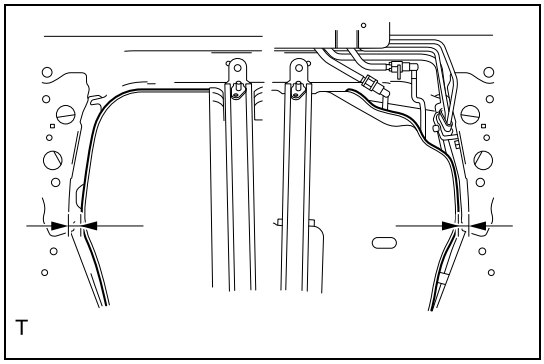

(5) Measure the distances from the left and right side of fuel tank ASSY to the body, respectively, and adjust the position of fuel tank ASSY so that the difference between the left and right values is within the standard value.
Standard value: 2 mm {0.0787 in} or less

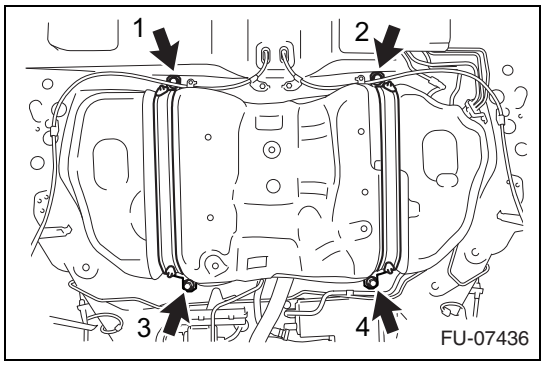

(6) Tighten the four bolts in the order as shown in the figure and install the fuel tank band NO.1.
Standard value:T=33N·m {337kgf·cm} {24.3ft·lbf}

3. INSTALL CHARCOAL CANISTER ASSEMBLY
   (1) Connect the fuel tank vent tube as indicated by the arrows in the order shown in the illustration.

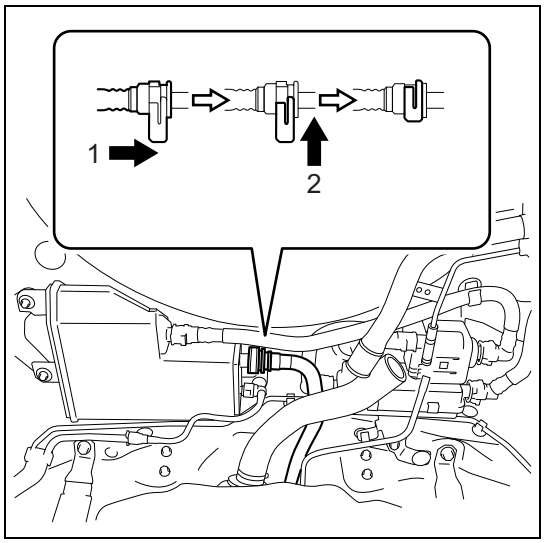

4. CONNECT FUEL TANK VENT HOSE SUB-ASSEMBLY
   (1) Engage the clamp to install the tube.
   (2) Connect the fuel tank vent hose sub-assembly with the clamp.
5. Fuel tank to filler pipe, hose connection
   (1) Connect the fuel tank to filler pipe hose with the hose clamp.
   Standard value:T=2.0N·m {20kgf·cm} {1.5ft·lbf}
6. Parking brake cable ASSY NO.3 installation (Refer to PB - 12)
7. Parking brake cable ASSY NO.2 installation (Refer to PB - 12)
8. Fuel tank protector installation
   (1) Install the fuel tank protector with a new nut and two clips.
   Standard value:T=9.0N·m {92kgf·cm} {6.6ft·lbf}
9. Installation of rear suspension member SUB-ASSY
   (Refer to RP - 37)

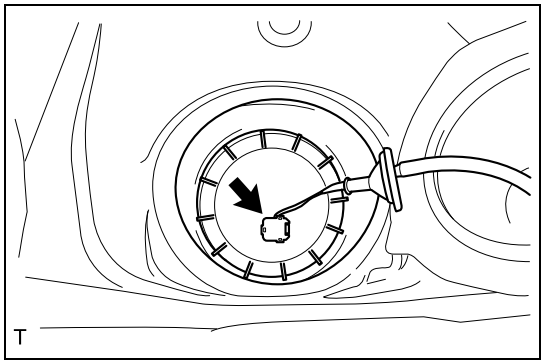

10. Fuel sub sender gauge connector installation
    (1) Connect the fuel sub sender gauge connector.

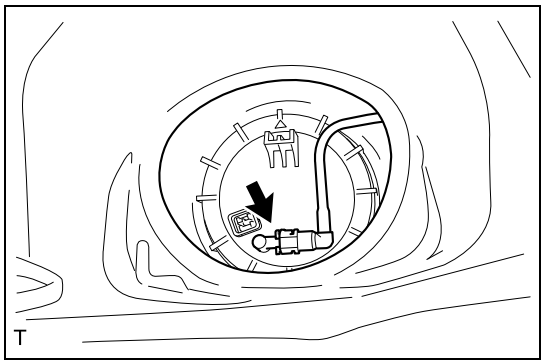

11. Fuel delivery tube installation
    (1) Connect the fuel delivery tube. (Refer to FU - 3)

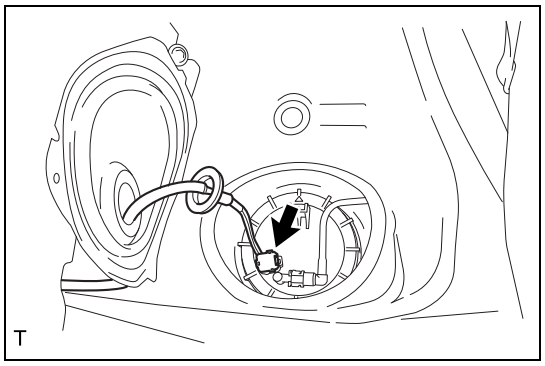

12. Fuel pump connector installation
    (1) Connect the fuel pump connector.

13. Fuel refill
14. Connection of the battery ground terminal
    Standard value:T=6.0N·m {61kgf·cm} {4.4ft·lbf}
15. Exhaust gas leakage check (Refer to EC - 3)

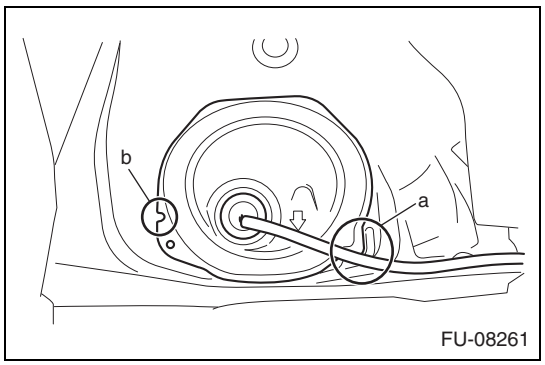

16. Rear floor service hole cover installation
    (1) Install the rear floor service hole cover using new butyl tape.
    NOTE:
    (a) Align the flange of the rear floor service hole cover to the corner bead on the floor.
    (b) Align the cutout for the rear floor service hole cover to the floor protrusion.
    (2) Install the grommet to the rear floor service hole cover.

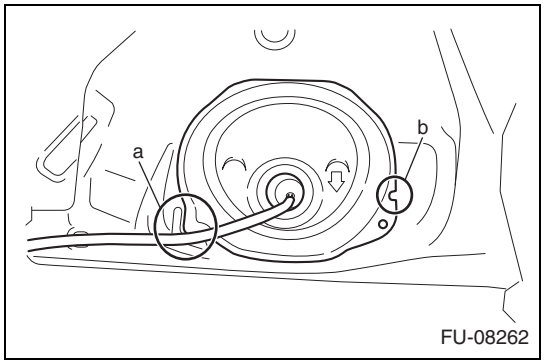

17. Rear floor service hole cover NO.2 installation
    (1) Install the rear floor service hole cover NO.2 using new butyl tape.
    NOTE:
    (a) Align the flange of the rear floor service hole cover No. 2 to the corner bead on the floor.
    (b) Align the cutout for the rear floor service hole cover No. 2 to the floor protrusion.
    (2) Install the grommet to the rear floor service hole cover NO.2.
18. Installation of separate type rear seat cushion ASSY RH (Refer to SE - 39)
19. Separate type rear seat cushion ASSY LH installation (Refer to SE - 39)

Fuel sender gauge ASSY (FA20)

Exploded view

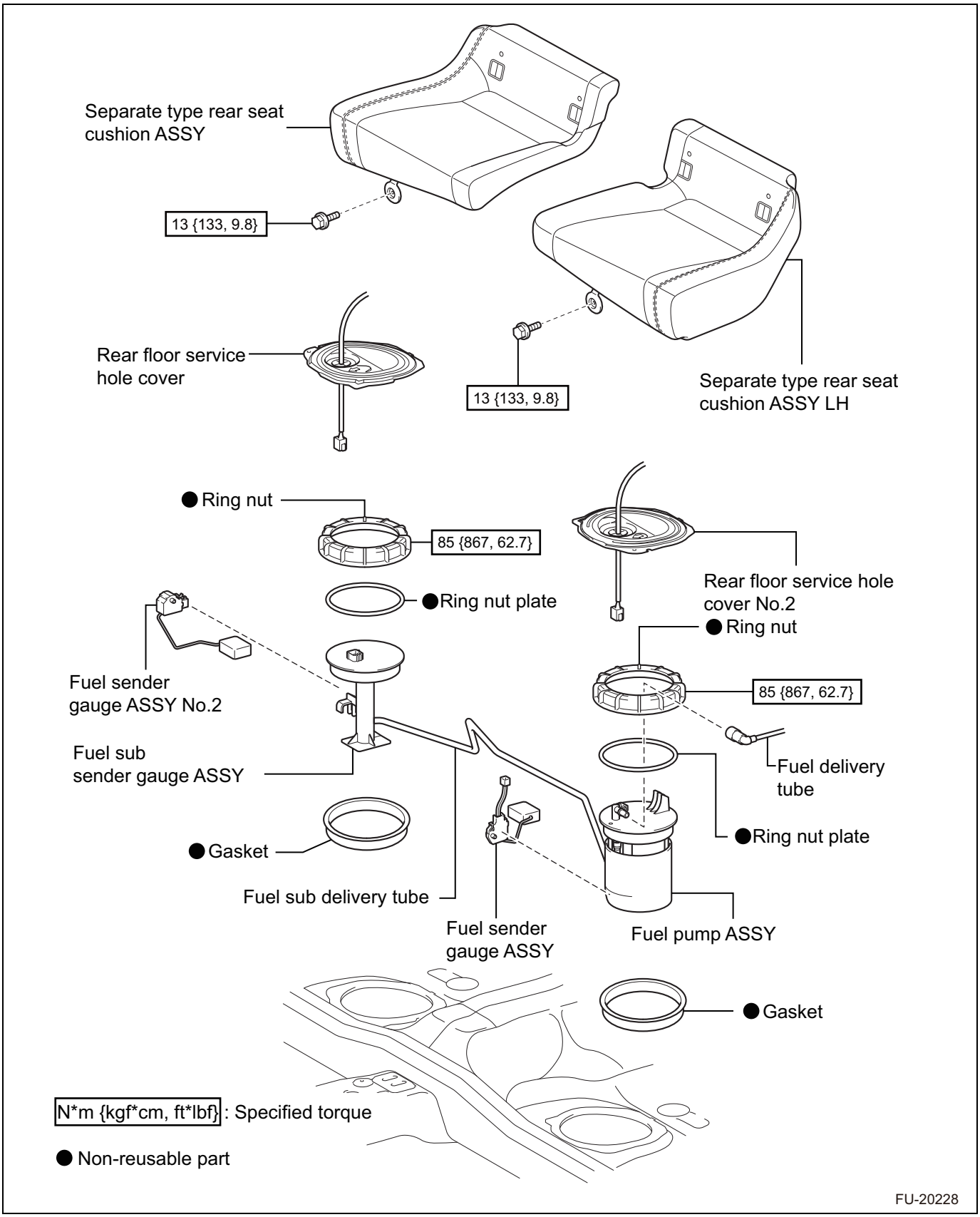

Removal

1. Fuel spill prevention procedure (Refer to FU - 3)
2. Draining of fuel (Refer to FU - 47)
3. Disconnection of the battery ground terminal (Refer to IN - 6)
4. Removal of separate type rear seat cushion ASSY RH (Refer to SE - 31)
5. Removal of separate type rear seat cushion ASSY LH (Refer to SE - 31)
6. Removal of rear floor service hole cover NO.2 (Refer to FU - 47)
7. Removal of fuel pump ASSY (Refer to FU - 48)



8. Removal of fuel sender gauge ASSY
   (1) Disconnect the fuel sender gauge connector and remove the harness from the clamp.

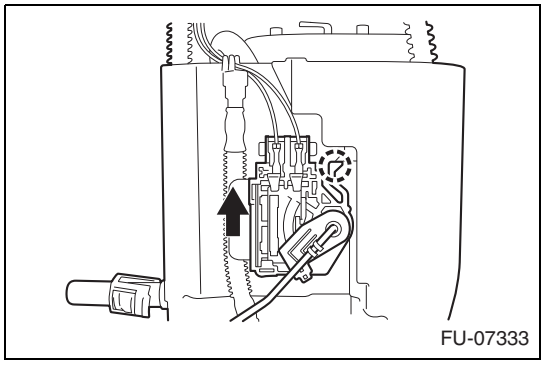

   (2) Push up the claw to remove the fuel sender gauge ASSY.
   CAUTION:
   Do not bend the arm of fuel sender gauge ASSY.

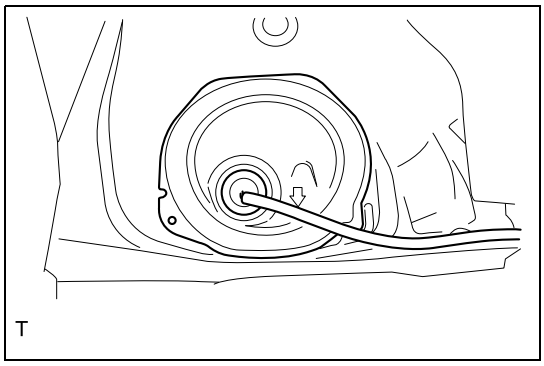

9. Rear floor service hole cover removal
   (1) Push in the grommet to remove the grommet from the rear floor service hole cover.
   (2) Remove the butyl tape and remove the rear floor service hole cover.

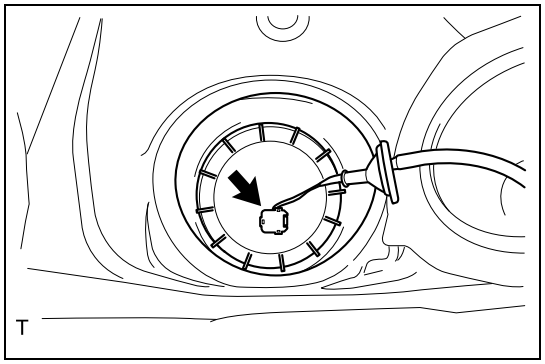

(3) Disconnect the fuel sub sender gauge connector.

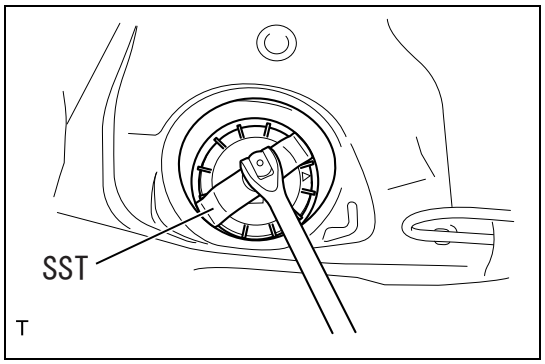

10. Fuel sub sender gauge ASSY removal
    (1) Use the SST to loosen the ring nut.
    SST 42099CA000
    CAUTION:
    - If the fuel gauge indicates that two thirds or more of the fuel is remaining, be sure to drain the fuel before starting the work to avoid the fuel to spill.
    - Do not use any tools other than the SST.
    - Do not turn the fuel sub sender gauge ASSY in the fuel tank ASSY to prevent the arm of fuel sender gauge ASSY NO.2 from bending.

    NOTE:
    Insert the cutout portion of SST into the rib of ring nut to fix the SST securely.

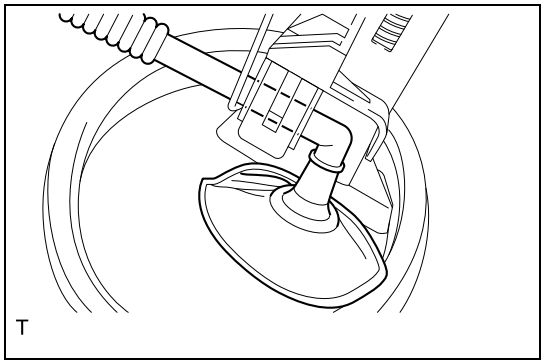

(2) Take out the fuel sub sender gauge ASSY from the fuel tank and remove the filter and fuel delivery tube as a unit from the fuel sub sender gauge ASSY.
    CAUTION:
    - Do not bend the arm of fuel sender gauge ASSY NO.2.
    - Be careful not to spill the fuel outside the fuel tank or in the vehicle.

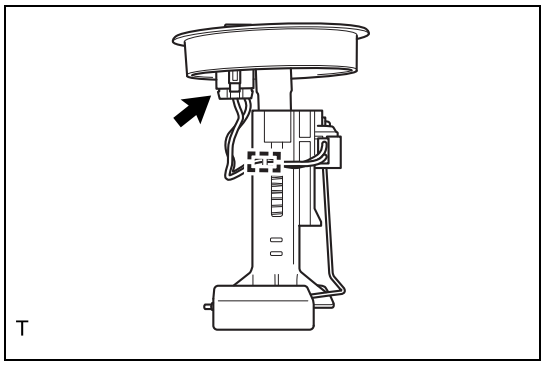

11. Fuel sender gauge ASSY NO.2 removal
    (1) Disconnect the connector from the fuel sender gauge ASSY NO.2 and remove the harness from the clamp.

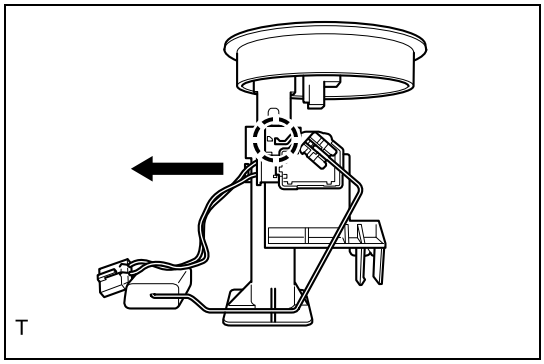

(2) Push the claw and remove the fuel sender gauge ASSY NO.2 by sliding it in the direction as shown in the figure.
CAUTION:
Do not bend the arm of fuel sender gauge ASSY NO.2.

Installation

1. Fuel sender gauge ASSY NO.2 installation
   (1) Engage the claw and install the fuel sender gauge ASSY NO.2 to the fuel sub delivery tube.
   (2) Connect the fuel sender gauge ASSY NO.2 connector and install the harness to the clamp.
2. Fuel sub sender gauge ASSY installation
   (1) Install a new gasket to the fuel tank.

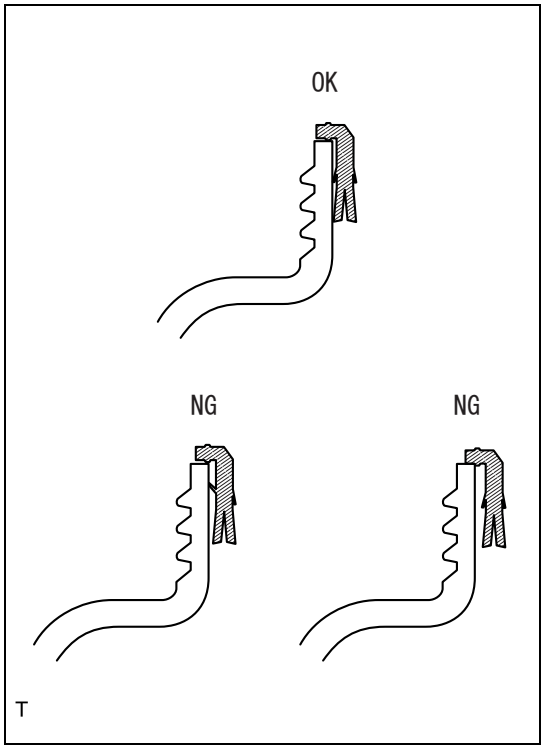

CAUTION:
- Do not bend the arm of fuel sender gauge ASSY NO.2.
- Improper installation such as warpage, slip, etc. results in fuel leakage. Make sure that there is no warpage, slip, etc. in the entire circumference when installing the gasket to the fuel tank.

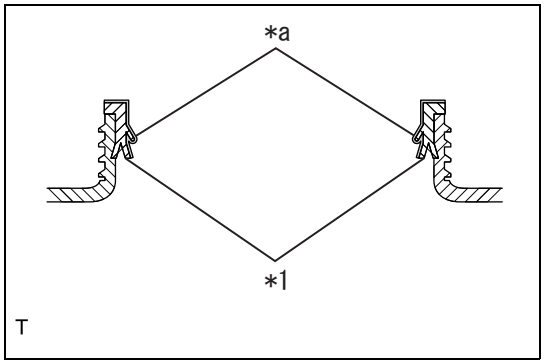

(2) Apply gasoline to the gasket.

Captions in illustration

*1	Gasket
*a	Areas of gasoline application

CAUTION:
- When applying gasoline to the gasket, apply it to the area as shown in the figure.
- Be careful that no gasoline comes into contact with the threaded portion of fuel tank.
- Make sure that there is no fuel, foreign matter, etc. on the sealing portion.

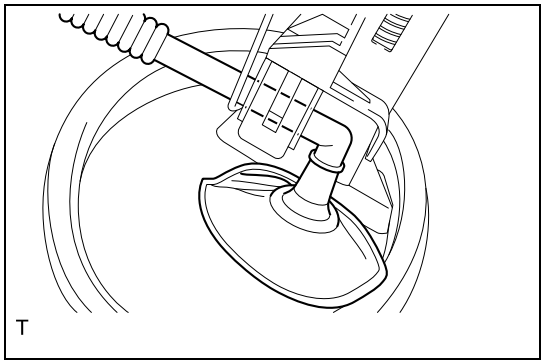

(3) Install the fuel sub delivery tube together with the filter to the fuel sub sender gauge ASSY.

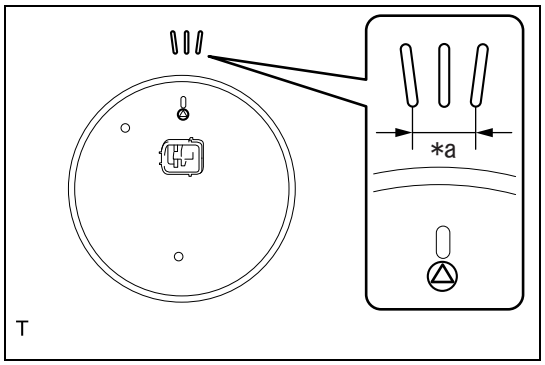

(4) Set the fuel sub sender gauge ASSY in the installation position range mark of fuel tank.

Captions in illustration

*a	Installation position range mark

CAUTION:
Do not bend the arm of fuel sender gauge ASSY NO.2.

(5) Install a new ring nut plate and ring nut, and then temporarily tighten the ring nut.

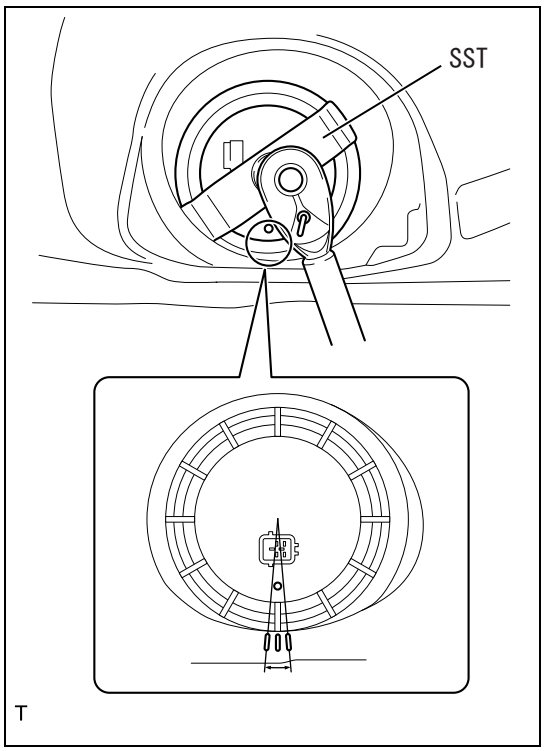

(6) Tighten the ring nut using the SST.
SST 42099CA000
Standard value:T=85N·m {867kgf·cm} {62.7ft·lbf}
CAUTION:
- Do not use any tools other than the SST.
- Make sure that the position mark on the fuel sub sender gauge ASSY is located within the installation position range mark on the fuel tank as shown in the figure.
- After tightening to the specified torque, confirm the tightening by tightening it to the specified torque again.

NOTE:
Insert the cutout portion of SST into the rib of ring nut to fix the SST securely.

3. Rear floor service hole cover installation
   (1) Connect the connector and install the rear floor service hole cover using new butyl tape.
4. Fuel sender gauge ASSY installation
   (1) Slide the fuel sender gauge downward to install it.
   (2) Install the fuel sender gauge connector.
5. Fuel pump ASSY installation (Refer to FU - 54)
6. Connection of the battery ground terminal
   Standard value:T=6.0N·m {61kgf·cm} {4.4ft·lbf}

7. Rear floor service hole cover NO.2 installation (Refer to FU - 56)
8. Installation of separate type rear seat cushion ASSY RH (Refer to SE - 39)
9. Separate type rear seat cushion ASSY LH installation (Refer to SE - 39)

Unit inspection

1. Fuel sender gauge ASSY check (fuel sender gauge main)
   (1) Visual inspection
   (a)Check the fuel sender gauge ASSY for damage.

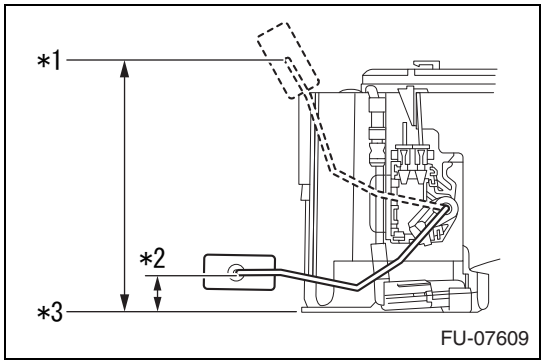

(b)Check the dimensions between the float and fuel tank seating surface when the float is at F (upper limit) and E (lower limit).

Dimension

Float position F (upper limit) - fuel tank seating surface	121 to 129 mm {4.76 to 5.08 in}
Float position E (lower limit) - fuel tank seating surface	14.7 to 22.7 mm {0.579 to 0.894 in}

Captions in illustration

*1	Float position F (upper limit)
*2	Float position E (lower limit)
*3	Fuel tank seating surface

(2) Resistance check
WARNING:
Be careful of fire.
(a)Check that the float moves smoothly between the positions F (upper limit) and E (lower limit).

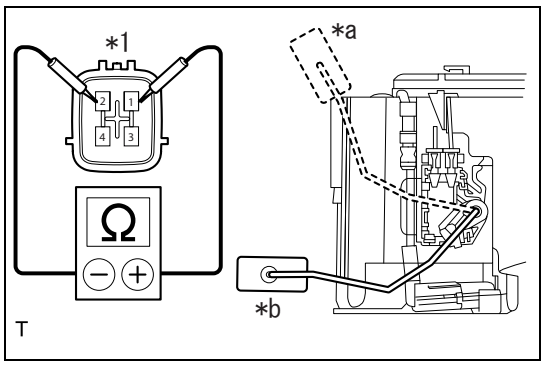

(b)Check the resistance between the connector terminals when the float is at F (upper limit) and E (lower limit). Also check that the resistance varies continuously.
Resistance

Inspection terminals	Inspection conditions	Standard value
1 - 2	Float position F (upper limit)	6.5 to 8.5 Ω
	Float position E (lower limit)	168 to 172Ω

Captions in illustration

*1	Connector not connected (Fuel sender gauge ASSY)
*a	F (upper limit)
*b	E (lower limit)

2. Fuel sender gauge ASSY NO.2 check (fuel sender gauge sub)
   (1) Visual inspection
   (a)Check the fuel sender gauge ASSY NO.2 for damage.

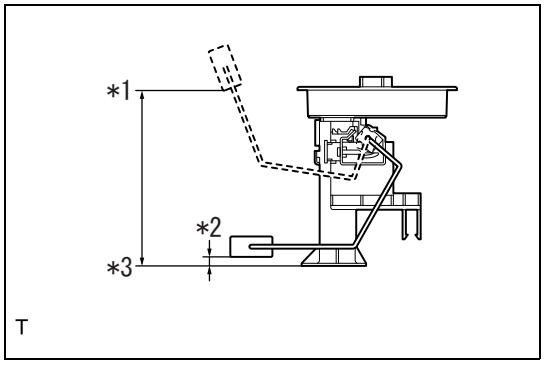

(b)Check the dimensions between the float and fuel tank seating surface when the float is at F (upper limit) and E (lower limit).

Dimension

Float position F (upper limit) - fuel tank seating surface	148.8 to 157.8 mm {5.86 to 6.21 in}
Float position E (lower limit) - fuel tank seating surface	-1.3 to 7.7 mm {-0.05 to 0.30 in}

Captions in illustration

*1	Float position F (upper limit)
*2	Float position E (lower limit)
*3	Fuel tank seating surface

(2) Resistance check
WARNING:
Be careful of fire.

(a)Check that the float moves smoothly between the positions F (upper limit) and E (lower limit).

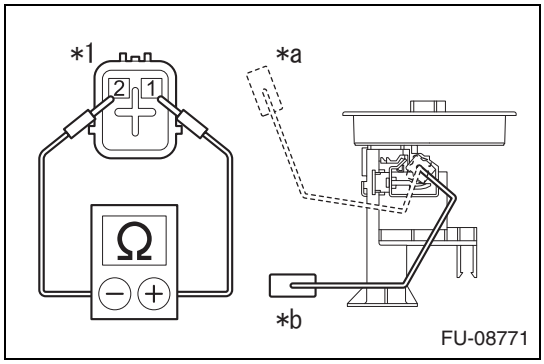

(b)Check the resistance between the connector terminals when the float is at F (upper limit) and E (lower limit). Also check that the resistance varies continuously.

Resistance

Inspection terminals	Inspection conditions	Standard value
1 - 2	Float position F (upper limit)	6.5 to 8.5 Ω
	Float position E (lower limit)	237.5 to 242.5 Ω

Captions in illustration

*1	Connector not connected (Fuel sender gauge ASSY NO.2)
*a	F (upper limit)
*b	E (lower limit)

FU

Filler pipe (FA20)

Exploded view

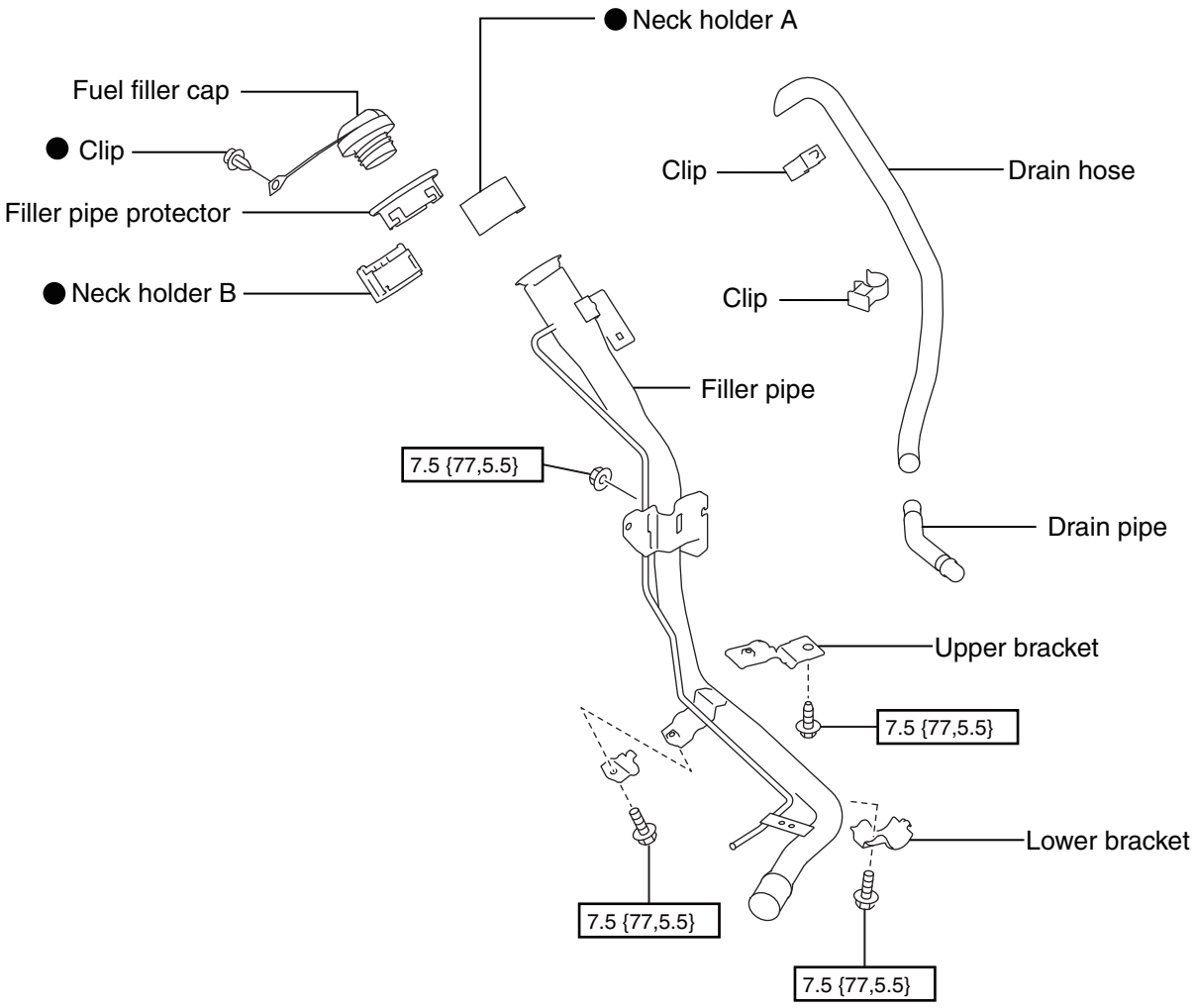

N*m {kgf*cm,ft*lbf} : Tightening torque

● Non-reusable parts

FU-08746

Removal

1. Fuel spill prevention procedure (Refer to FU - 3)

2. Draining of fuel (Refer to FU - 47)
3. Disconnection of the battery ground terminal (Refer to IN - 6)
4. Removal of fuel filler cap
   (1) Open the fuel filler lid, and remove the fuel filler cap.

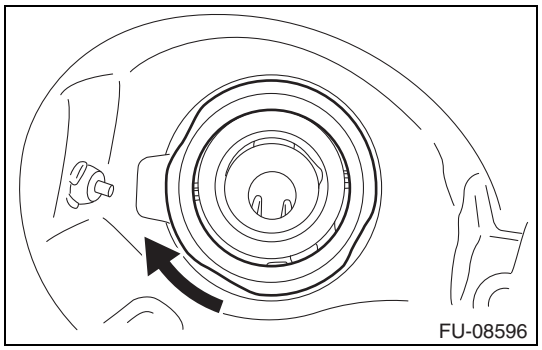

   (2) Turn the fuel filler pipe protector in the direction of the arrow to unlock and remove it.

5. Removal of rear suspension member SUB-ASSY (Refer to RP - 33)
6. Removal of rear mud guard RH
   (1) Remove the clip to remove the rear mud guard RH.
7. Removal of filler pipe

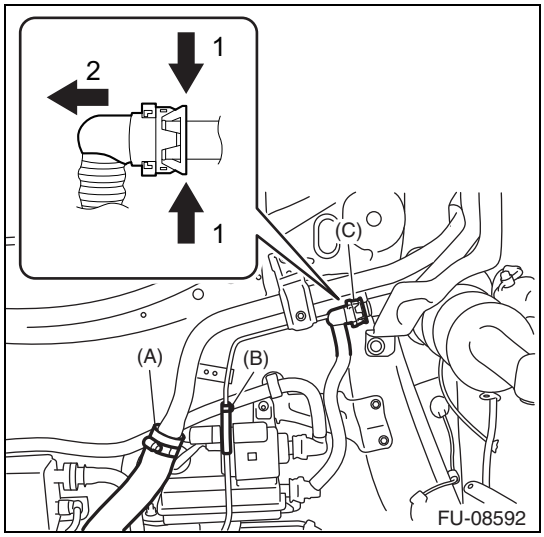

   (1) Disconnect the fuel tank to filler pipe hose (A) and vent hose (B) from the filler pipe, and disconnect the quick connector of drain tube (C).

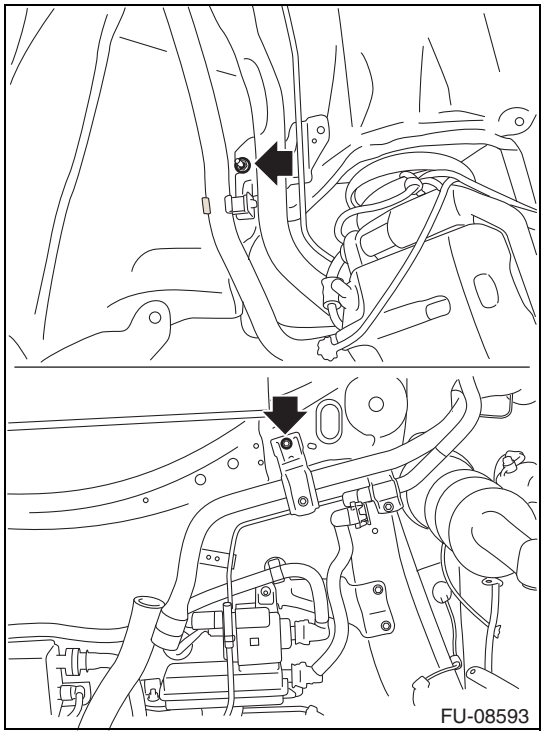

(2) Remove the bolts and nuts securing the filler pipe to the body.

(3) Remove the filler pipe from underside of the vehicle.

Installation

1. Installation of filler pipe
   (1) Open the fuel filler lid.
   (2) Insert the filler pipe from inside of the rear fender.

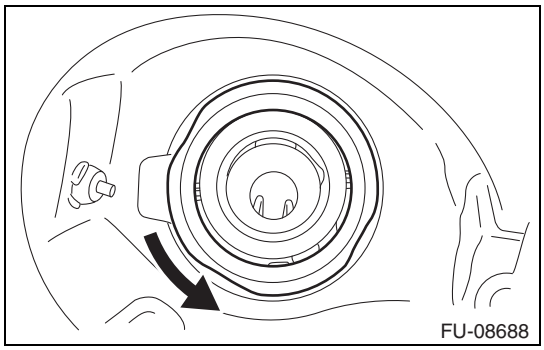

(3) Align the cutout of the filler pipe protector with the protrusion of the neck holder. Insert the filler pipe protector all the way down and turn in the direction of the arrow to lock.

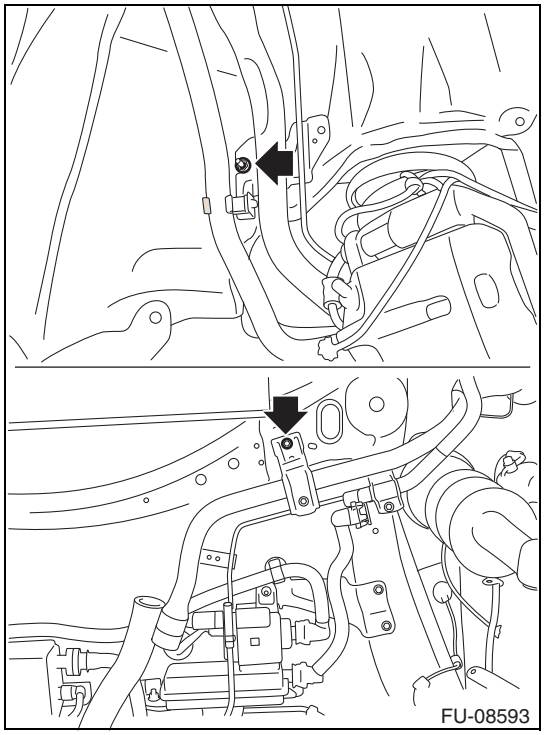

(4) Install the filler pipe to the vehicle.
Standard value:T=7.5 N·m {77 kgf·cm} {5.5 ft·lb}

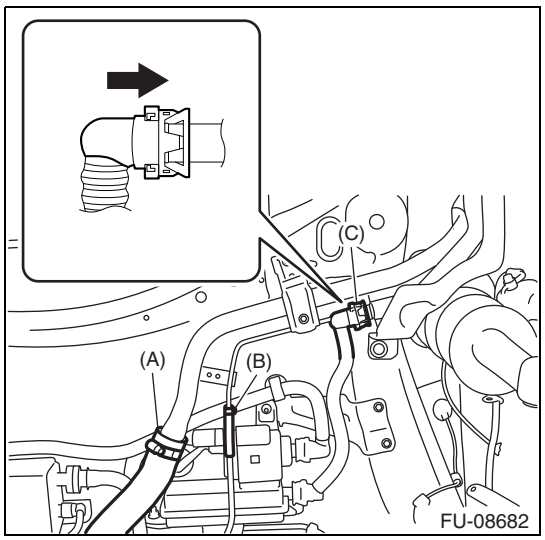

(5) Connect the fuel tank to filler pipe hose (A) and vent hose (B) to the filler pipe, and connect the quick connector of drain tube (C).
Standard value:T=2.0 N·m {20 kgf·cm} {1.5 ft·lb}

2. Installation of rear mud guard RH
   (1) Install the rear mud guard RH with clips.
3. Installation of rear suspension member SUB-ASSY (Refer toRP - 37)
4. Connection of the battery ground terminal
   Standard value:T=6.0 N·m {61 kgf·cm} {4.4 ft·lb}

On-vehicle inspection

1. Filler pipe check
   (1) Check the filler pipe for deformation, cracks or other damages.
   (2) Check the fuel tank to filler pipe hose for cracks, damage or looseness.

Emission control

Emission control system (FA20)
Parts location EC-2
On-vehicle inspection. EC-3
Circuit figure. EC-4

CANISTER
Components. EC-7
Removal. EC-7
Inspection. EC-11
Installation EC-13

Purge control solenoid valve (FA20)
Exploded view EC-15
Removal. EC-16
Installation EC-18
Unit inspection EC-18

Fuel tank cap ASSY (FA20)
Unit inspection EC-20

PCV valve (FA20)
Exploded view EC-21
Removal. EC-21
Installation EC-22
Unit inspection EC-22

Emission control system (FA20)

Parts location

EC

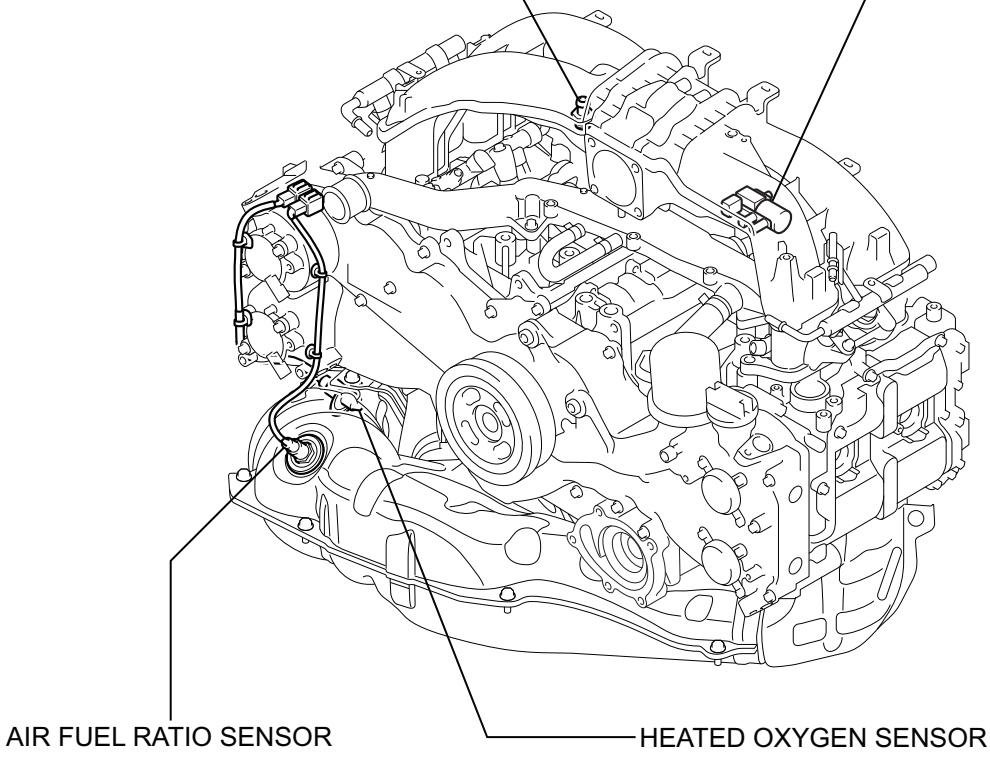

EC-03286

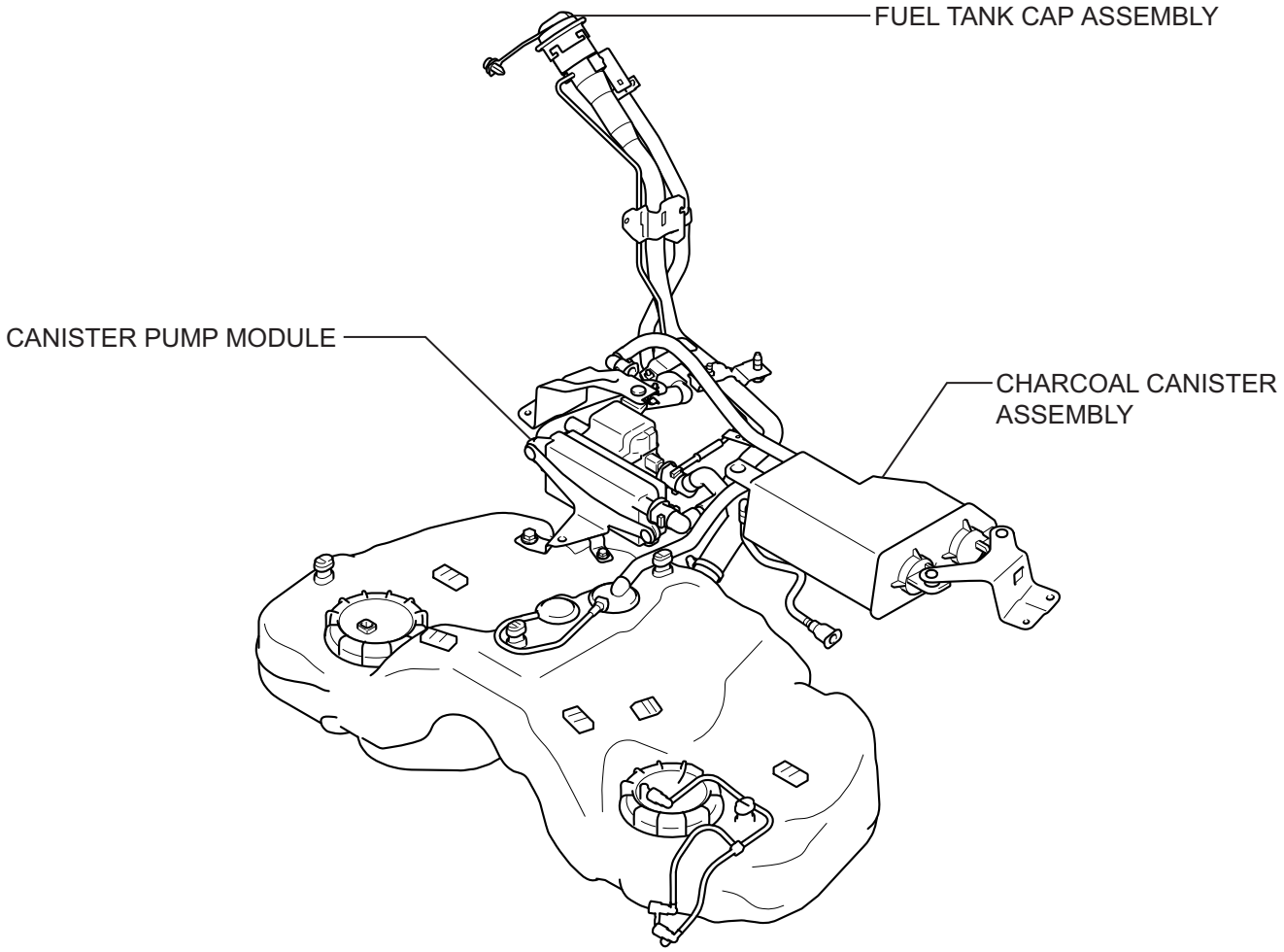

T

On-vehicle inspection

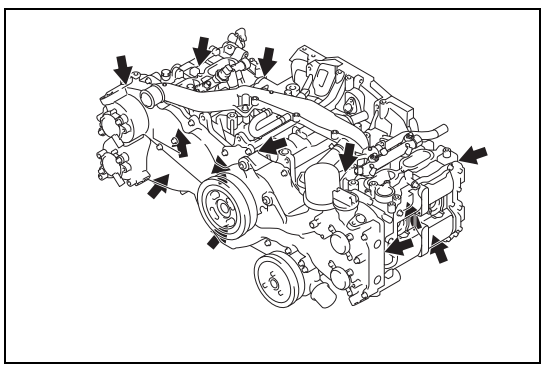

1. Visual check of hose, connection and gasket
   (1) Check the hoses for cracks, leakage or damage.
   NOTE:
   - Removing the oil level gauge, oil filler cap, ventilation hose, etc. causes an engine trouble or engine stall.
   - If any of the parts between the throttle body and cylinder head are not installed, loose or cracked, the engine intakes secondary air and this causes an engine trouble or engine stall.

Circuit figure

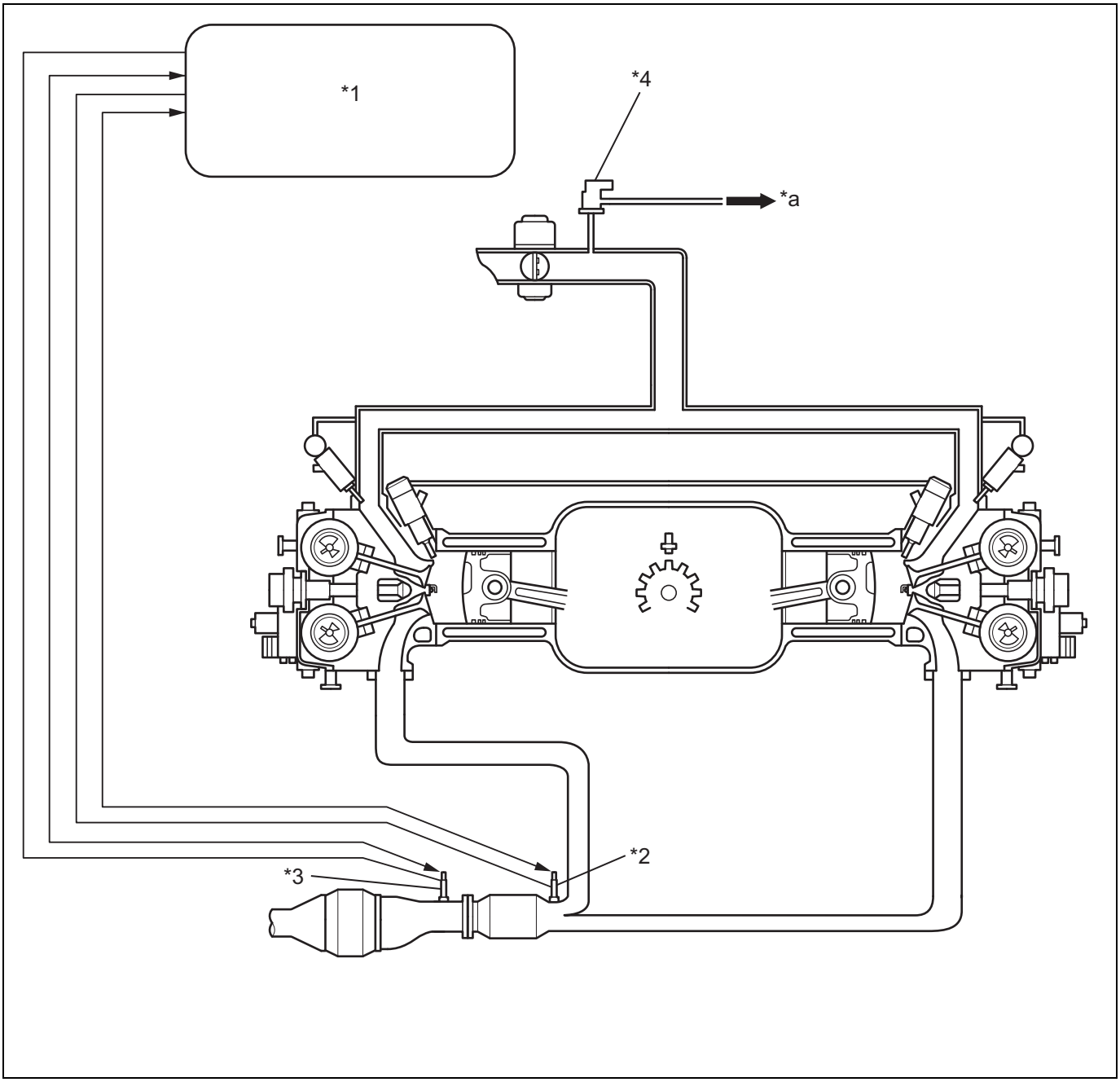

Captions in illustration

*1	ECM	*2	Air Fuel Ratio Sensor
*3	Heated Oxygen Sensor	*4	Purge Control Solenoid Valve
*a	to Charcoal Canister Assembly	-	-

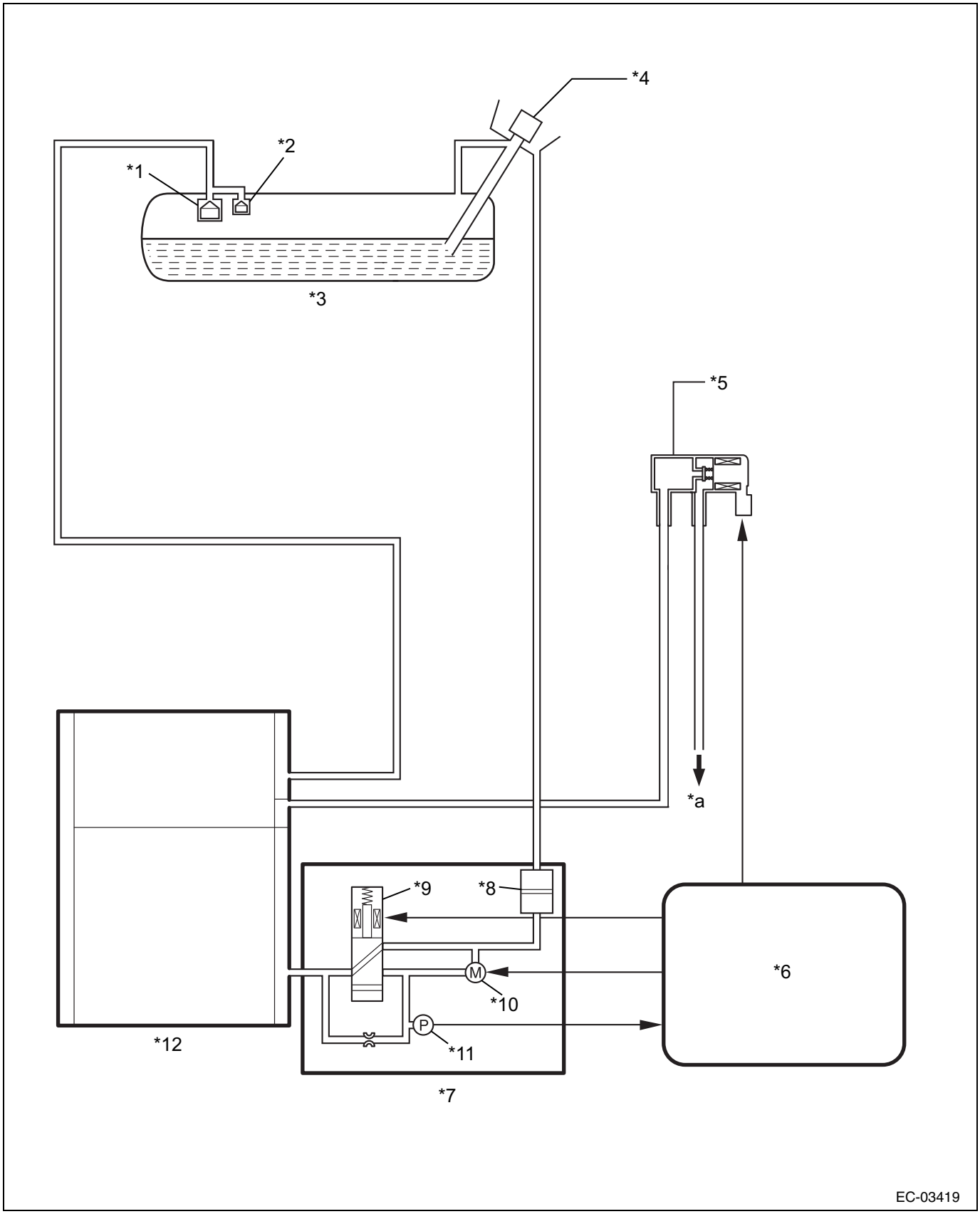

Captions in illustration

*1	Fuel Tank Vent Valve	*2	Cut-off Valve
*3	Fuel Tank Assembly	*4	Fuel Tank Cap Assembly
*5	Purge Control Solenoid Valve	*6	ECM
*7	Canister Pump Module	*8	Air Filter

*9	Vent Valve	*10	Pump Motor
*11	Canister Pressure Sensor	*12	Charcoal Canister Assembly
*a	to Intake Manifold	-	-

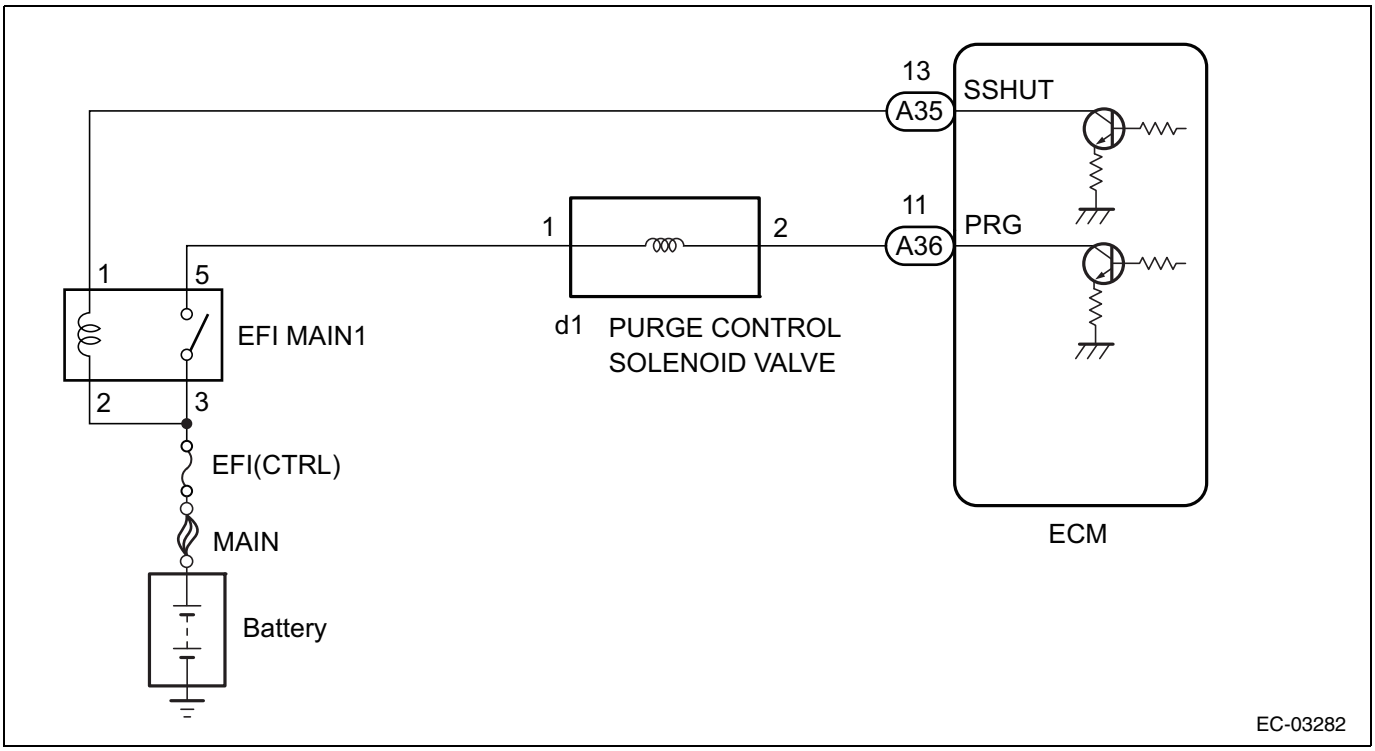

EC

CANISTER

COMPONENTS

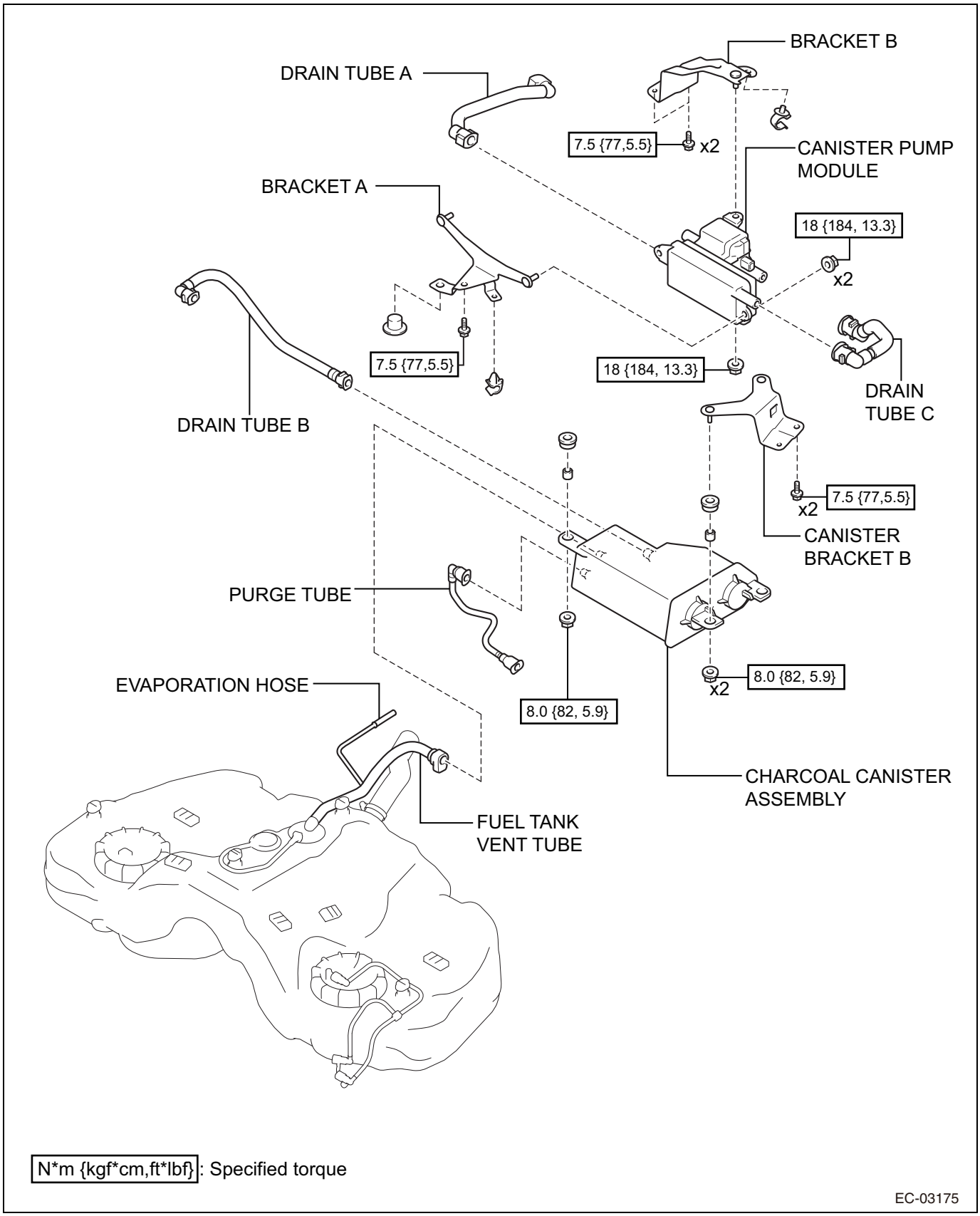

REMOVAL

1. REMOVE REAR DIFFERENTIAL CARRIER ASSEMBLY(See page AD - 35)

2. REMOVE REAR SUSPENSION MEMBER SUB-ASSEMBLY(See page RP - 33)

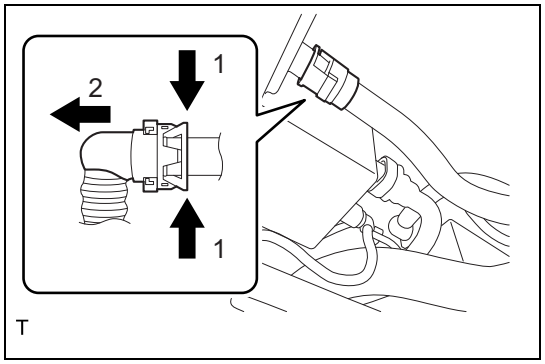

3. REMOVE CANISTER PUMP MODULE

(1) Disconnect the drain tube B as indicated by the arrows, in the order shown in the illustration.

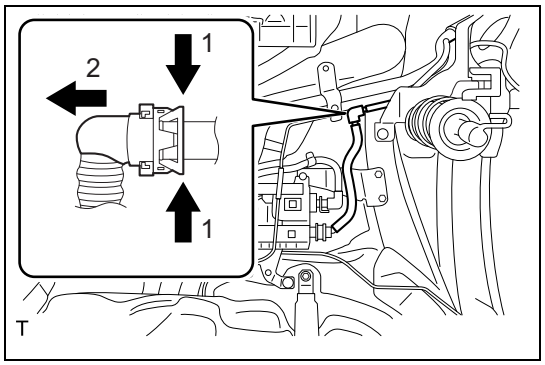

(2) Disconnect the drain tube A as indicated by the arrows, in the order shown in the illustration.

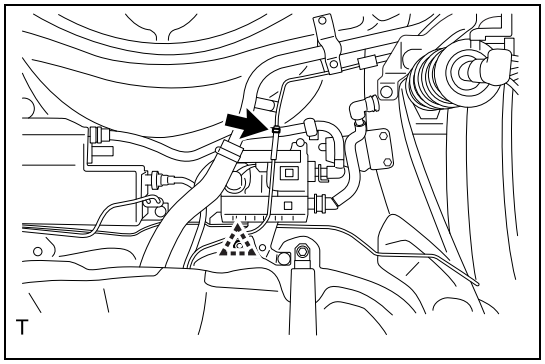

(3) Disconnect the evaporation hose from the fuel filler pipe assembly.
(4) Disengage the clip.

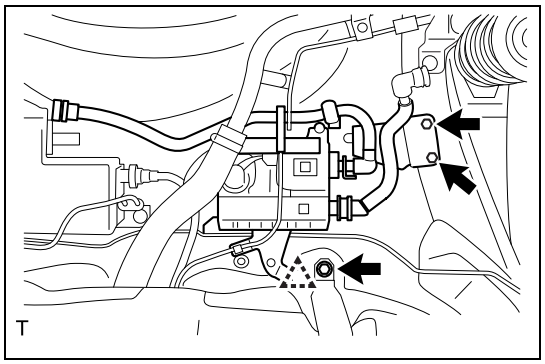

(5) Remove the 3 bolts and canister pump module.
(6) Disengage the clip.

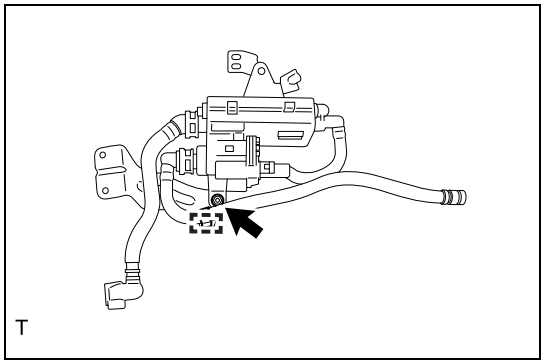
T

(7) Disengage the clamp.
(8) Remove the nut and bracket B.

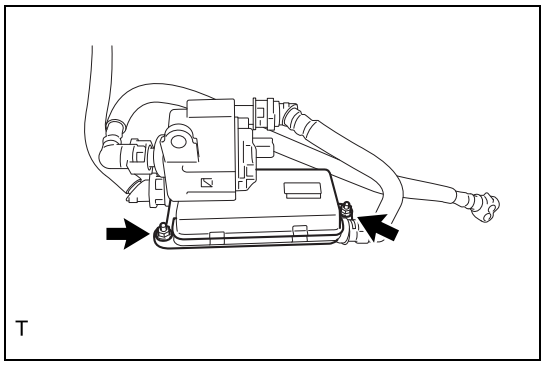
T

(9) Remove the 2 nuts and bracket A.

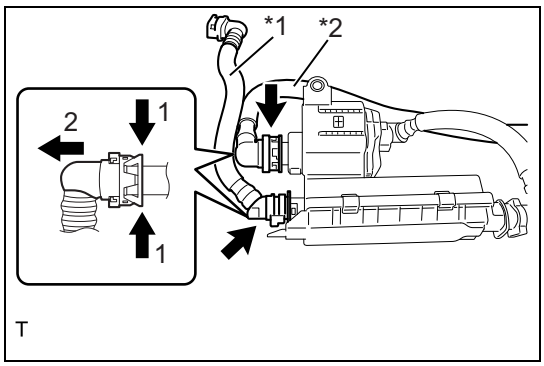

T

(10) Disconnect the drain tube A and drain tube B as indicated by the arrows, in the order shown in the illustration.

Text in Illustration

*1	Drain tube A
*2	Drain tube B

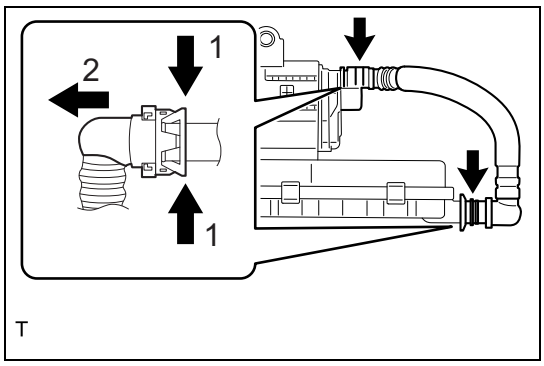

T

(11) Disconnect the 2 quick connector as indicated by the arrows, in the order shown in the illustration, and remove the drain tube C.

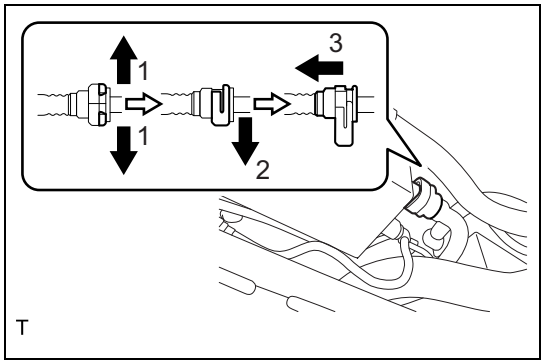

4. REMOVE CHARCOAL CANISTER ASSEMBLY
   (1) Disconnect the fuel tank vent tube as indicated by the arrows, in the order shown in the illustration.

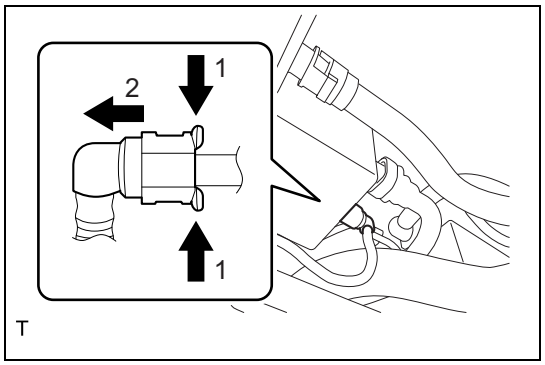

(2) Disconnect the purge tube as indicated by the arrows, in the order shown in the illustration.

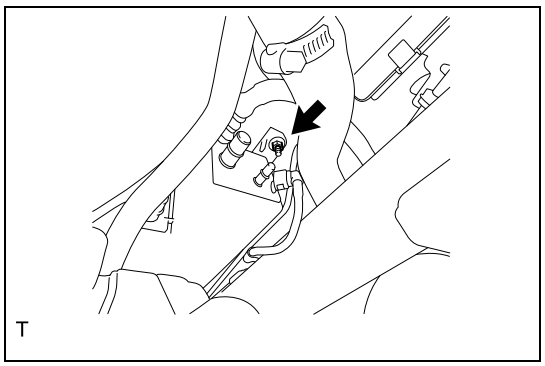

(3) Remove the nut.

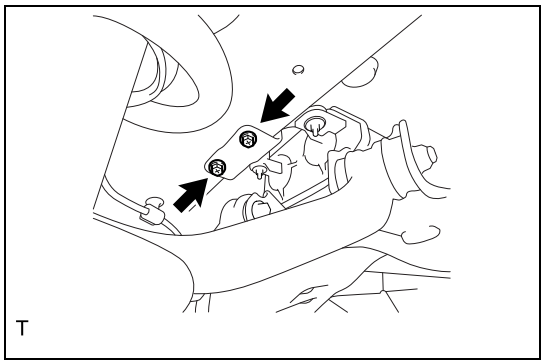

(4) Remove the 2 bolts and charcoal canister assembly along with the canister bracket B.

EC

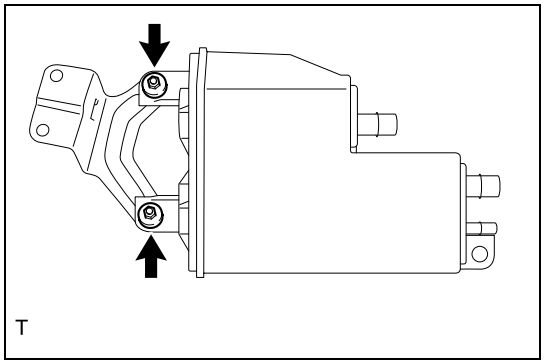

(5) Remove the 2 nuts and canister bracket B.

INSPECTION

1. INSPECT CHARCOAL CANISTER ASSEMBLY

CAUTION:

When applying vacuum, the needle may waver but, as long as the needle returns to its initial position immediately, it is not a malfunction.

(1) Visually check the charcoal canister assembly for cracks or damage.

If cracks or damage is found, replace the charcoal canister assembly.

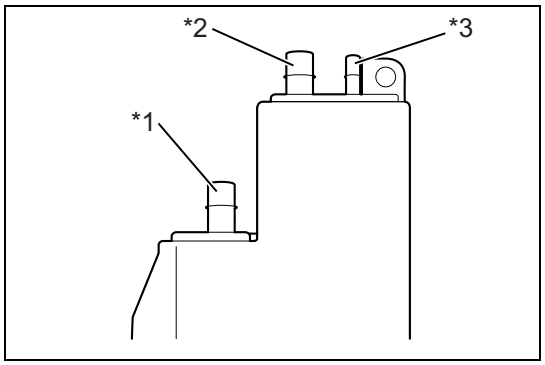

(2) Check the air flow.

(a) Using a vacuum pump, check the air flow according to the procedures below.

Text in Illustration

*1	Port A
*2	Port B
*3	Port C

OK

Measurement Condition	Specified Condition
Ports B and C closed, and vacuum applied to port A (2 kPa (15 mmHg, 0.590 in.Hg))	No air leaks
Port C closed, and vacuum applied to port A (2 kPa (15 mmHg, 0.590 in.Hg))	Air flows from port B
Port C closed and air blown into port A (5 kPa (0.1 kgf/cm^2, 0.725 psi))	Air flows from port B
Air blown into port A (5 kPa (0.1 kgf/cm^2, 0.725 psi))	Air flows from ports B and C

If the result is not as specified, replace the charcoal canister assembly.

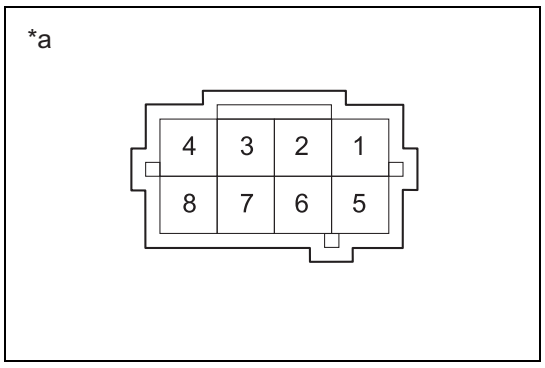

2. INSPECT CANISTER PUMP MODULE

(1) Measure the resistance according to the value in the table below.

Standard Resistance

Tester Connection	Condition	Specified Condition
1 - 5	20°C (68°F)	25 to 30 Ω
1 - 5	60°C (140°F)	27 to 35 Ω

Text in Illustration

*a	Component without harness connected (Canister Pump Module)

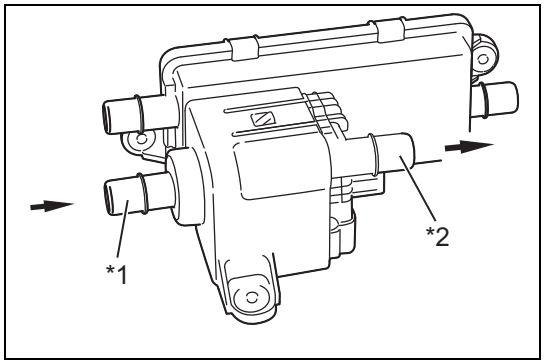

(2) Check the operation of the check valve.
(a) Install a clean hose to the purge control solenoid valve.
(b) Check that air flows from port A to port B.

Text in Illustration

*1	Port A
*2	Port B

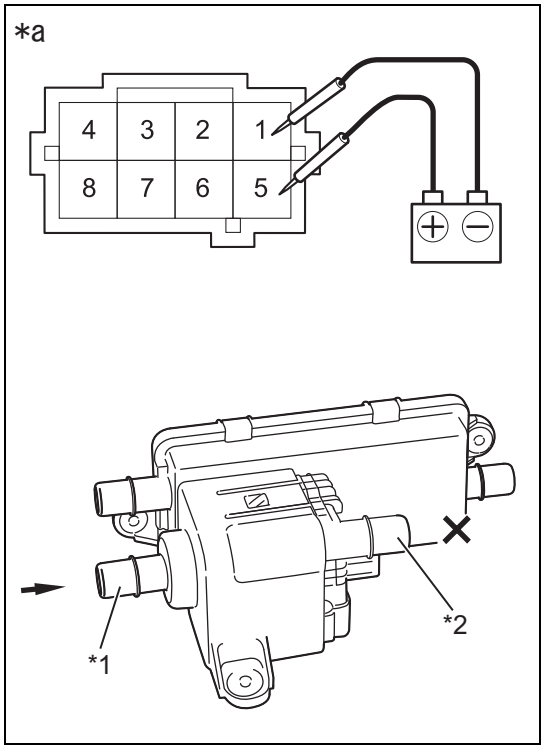

(c) Connect the positive (+) lead of the battery to terminal 5 and the negative (-) lead to terminal 1.
(d) Check that air does not flow from port A to port B.

Text in Illustration

*1	Port A
*2	Port B
*a	Component without harness connected (Canister Pump Module)

NOTE:
The purpose of inspection is to check the valve operation, and it is sufficient as long as it is confirmed that the flow volume changes significantly by opening and closing the valve. Therefore, a small amount of flow from *2 while the valve is open is not failure.

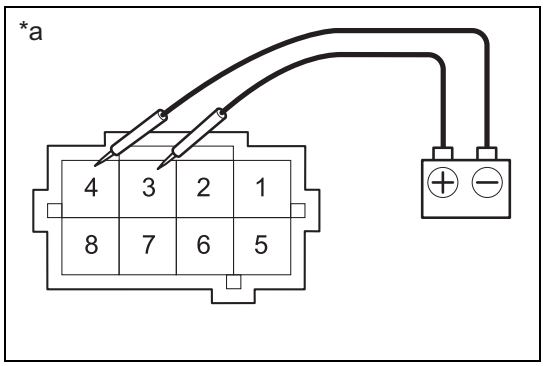

(e) Connect the positive (+) lead of the battery to terminal 3 and the negative (-) lead to terminal 4.

Text in Illustration

*a	Component without harness connected (Canister Pump Module)

(f) Check that the vacuum pump operates.
CAUTION:
Do not operate vacuum pump for 5 minutes or more.

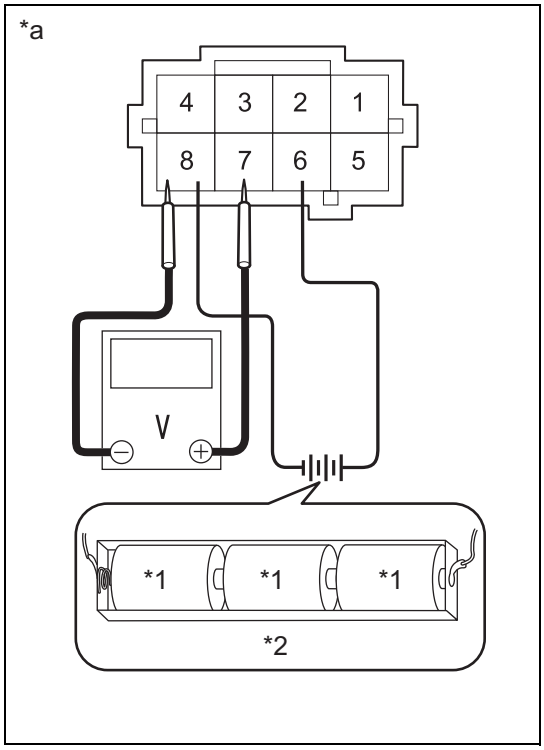

(g)Connect the positive (+) lead of the battery to terminal 6 and the negative (-) lead to terminal 8.

Text in Illustration

*1	1.6 V
*2	4.8 to 5.2 V
*a	Component without harness connected (Canister Pump Module)

NOTE:

- Use new dry-cell batteries.
- Using a circuit tester, check that the initial voltage of a single dry-cell battery is 1.6 V or more. Also check that the voltage of the three batteries in position is within the range from 4.8 to 5.2 V.

(h)Measure the voltage according to the value in the table below.

Standard Voltage

Tester Connection	Condition	Specified Condition
7 - 8	25°C (77°F)	Approx. 3.5 V

EC

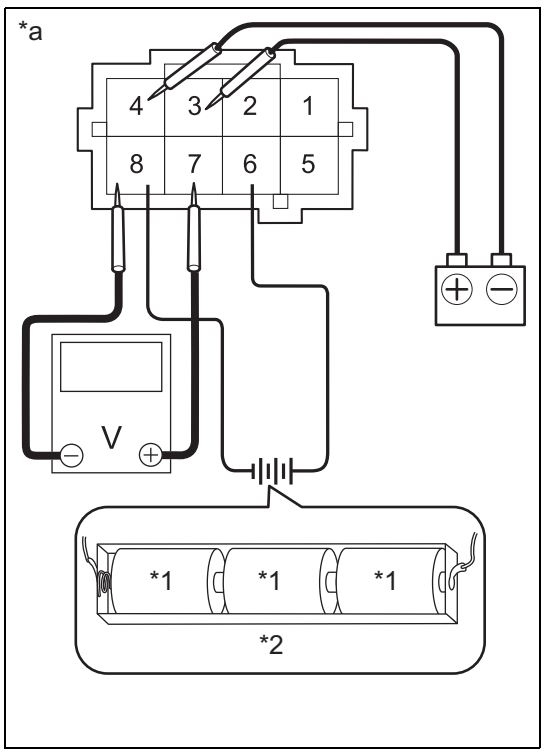

(i) Connect the positive (+) lead of the battery to terminal 6 and the negative (-) lead to terminal 8.

Text in Illustration

*1	1.6 V
*2	4.8 to 5.2 V
*a	Component without harness connected (Canister Pump Module)

NOTE:

- Use new dry-cell batteries.
- Using a circuit tester, check that the initial voltage of a single dry-cell battery is 1.6 V or more. Also check that the voltage of the three batteries in position is within the range from 4.8 to 5.2 V.
- 5 V of power supply may be supplied through a DC constant voltage source.

(j) Connect the positive (+) lead of the battery to terminal 3 and the negative (-) lead to terminal 4. Check that the voltage drops slightly from 3.5 volts.

INSTALLATION

1. INSTALL CHARCOAL CANISTER ASSEMBLY
   (1) Install the canister bracket B to the charcoal canister assembly with 2 nuts.
   Standard value:T=8.0N·m {82kgf·cm} {5.9ft·lbf}
   (2) Install the charcoal canister assembly with canister bracket B with the 2 bolts and the nut.
   Standard value:Bolt
   T=7.5N·m {76kgf·cm} {5.5ft·lbf}
   Nut
   T=8.0N·m {82kgf·cm} {5.9ft·lbf}

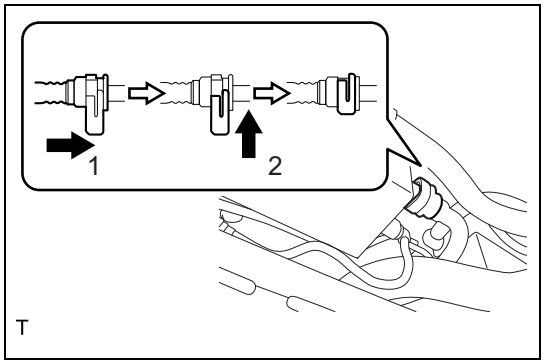

(3) Connect the fuel tank vent tube as indicated by the arrows, in the order shown in the illustration.

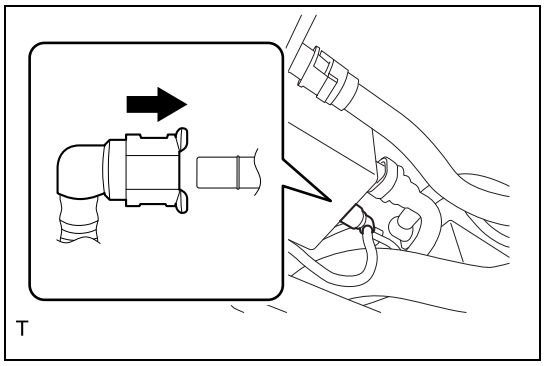

(4) Connect the purge tube as shown in the illustration.

EC

2. INSTALL CANISTER PUMP MODULE
   (1) Install the drain tube C.
   (2) Connect the drain tube A and the drain tube B.
   (3) Engage the clamp.
   (4) Install the nuts and bracket B.
   Standard value:T=18N·m {184kgf·cm} {13.3ft·lbf}
   (5) Install the 2 nuts and bracket A.
   Standard value:T=18N·m {184kgf·cm} {13.3ft·lbf}
   (6) Engage the clip.
   (7) Install the canister pump module with 3 bolts.
   Standard value:T=7.5N·m {77kgf·cm} {5.5ft·lbf}
   (8) Connect the evaporation hose to the fuel pipe assembly.
   (9) Engage the clip.
   (10) Connect the drain tube A to the fuel filler pipe.
   (11) Connect the drain tube B to the charcoal canister assembly.
3. INSTALL REAR SUSPENSION MEMBER SUB-ASSEMBLY(See page RP - 37)
4. INSTALL REAR DIFFERENTIAL CARRIER ASSEMBLY(See page AD - 65)

Purge control solenoid valve (FA20)

Exploded view

Transmission A/T:

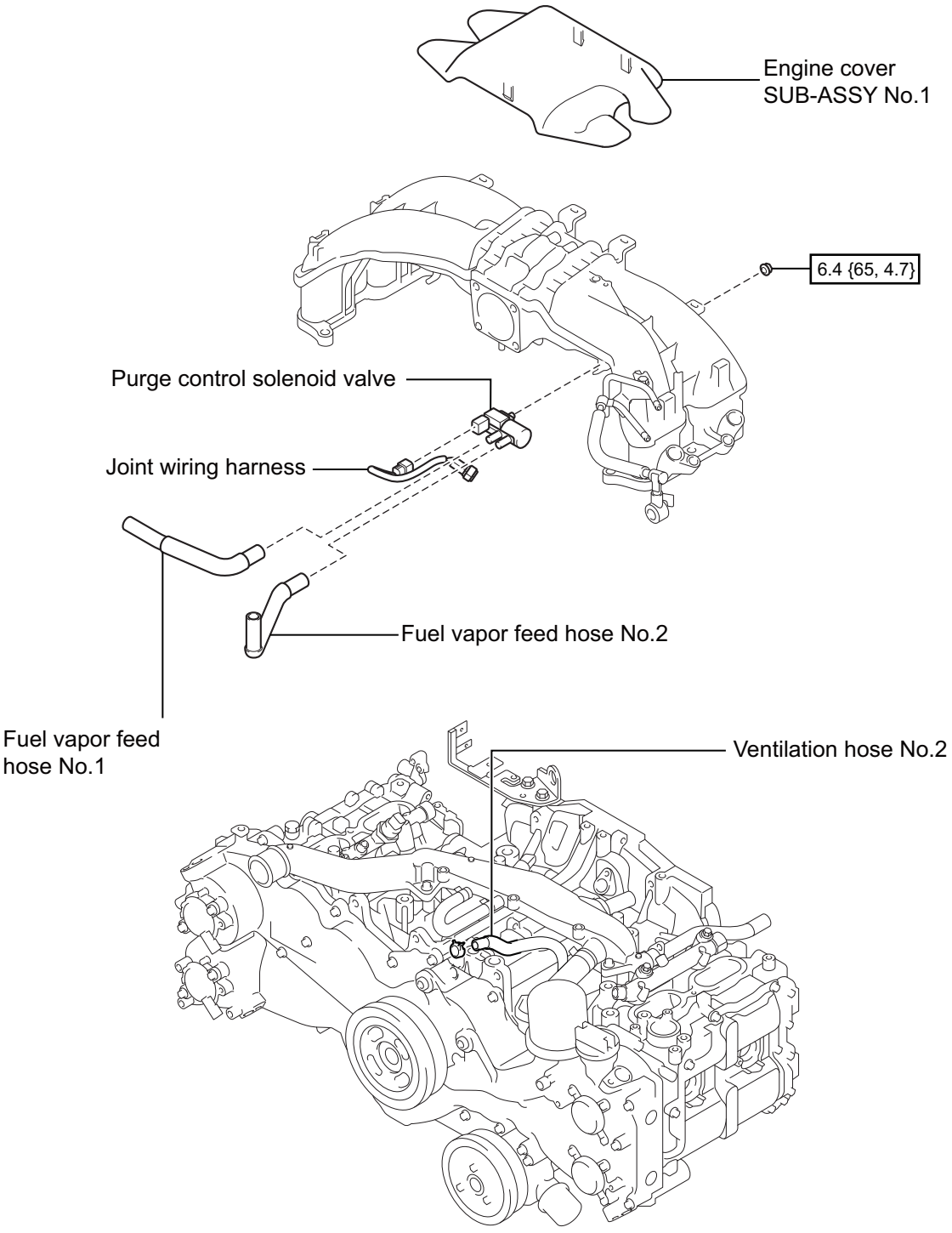

N*m {kgf*cm, ft*lbf} : Specified torque

EC-10052

EC

Transmission M/T:

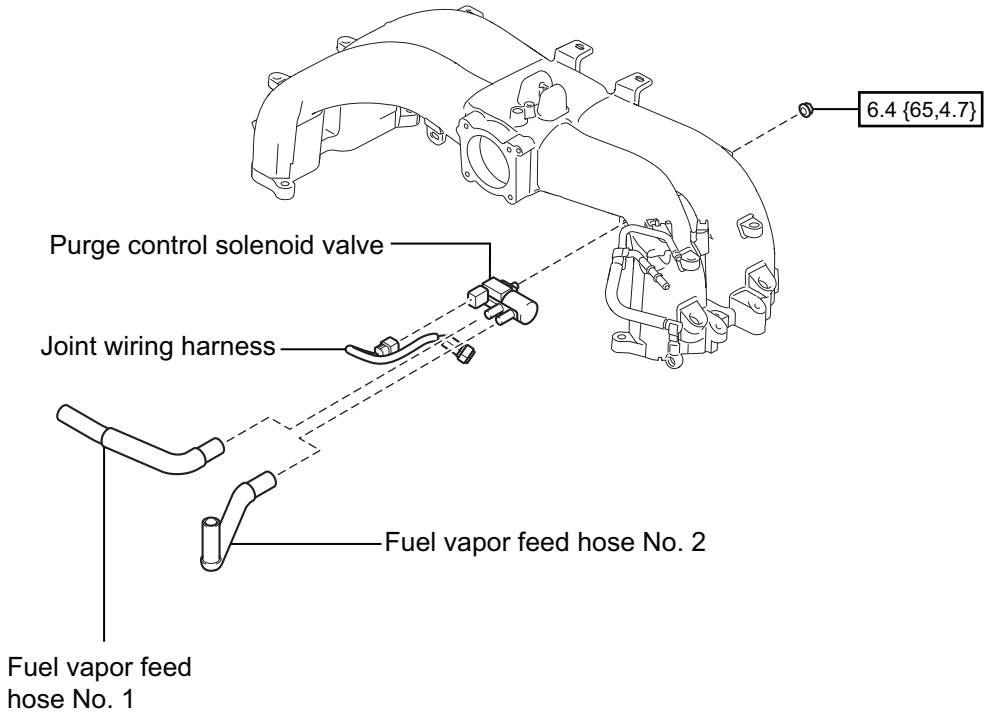

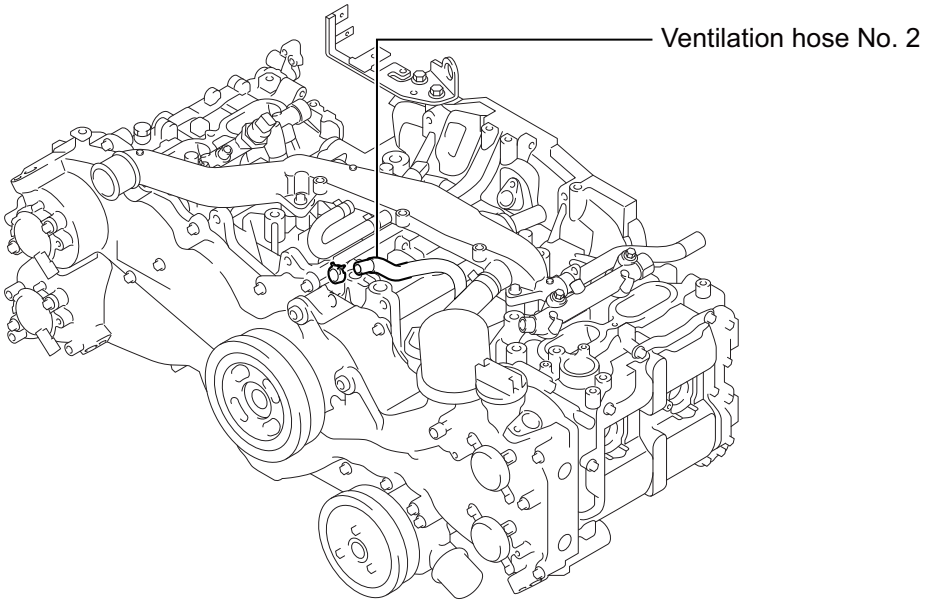

N*m {kgf*cm, ft*lbf}: Specified torque

EC-10053

Removal

1. Removal of engine cover SUB-ASSY No. 1 (transmission A/T) (Refer to IE - 16)

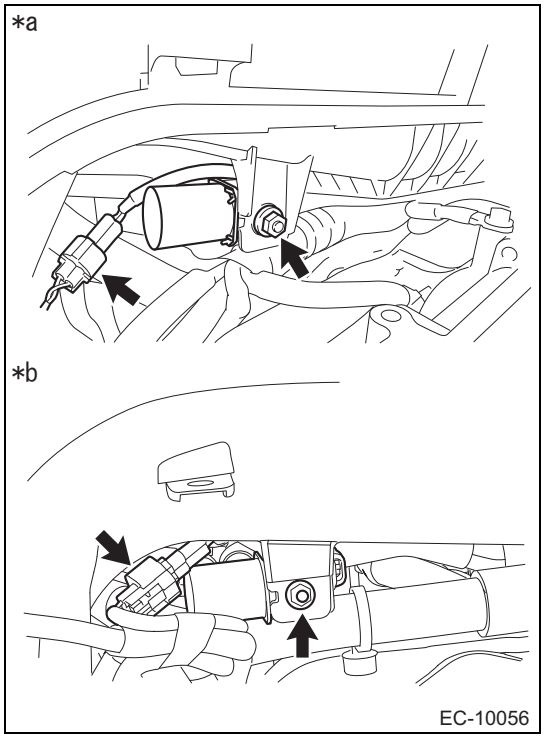

2. Removal of purge control solenoid valve
   (1) While holding the purge control solenoid valve by hand, remove the nut.
   (2) Disconnect the connector for the purge control solenoid valve.

Captions in illustration

*a	Transmission A/T
*b	Transmission M/T

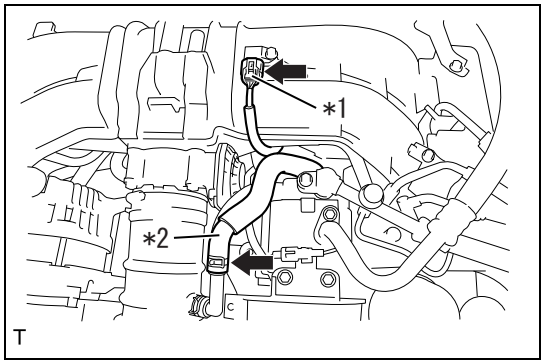

   (3) Disconnect the vacuum sensor connector. (Transmission A/T)
   (4) Disconnect the ventilation hose NO. 2 from the air intake boot. (Transmission A/T)

Captions in illustration

*1	Vacuum sensor connector
*2	Ventilation hose NO. 2

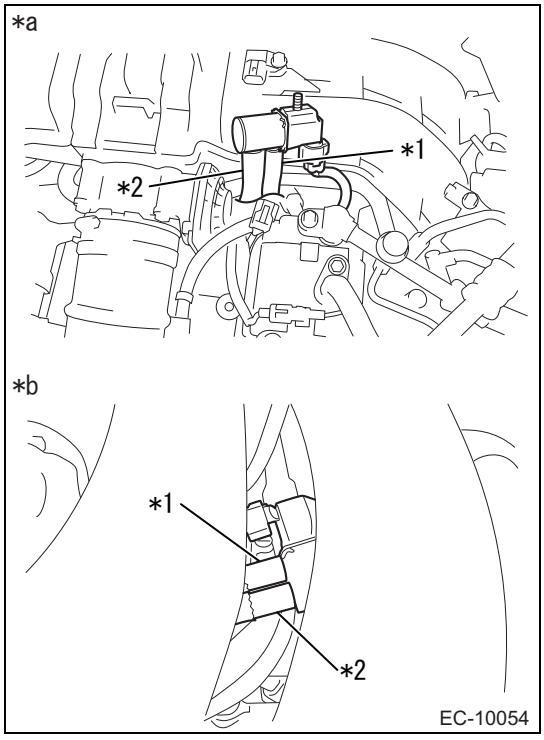

   (5) Disconnect the fuel vapor feed hose No. 1 and fuel vapor feed hose No. 2, and remove the purge control solenoid valve.

Captions in illustration

*a	Transmission A/T
*b	Transmission M/T
*1	Fuel vapor feed hose NO.1
*2	Fuel vapor feed hose NO.2

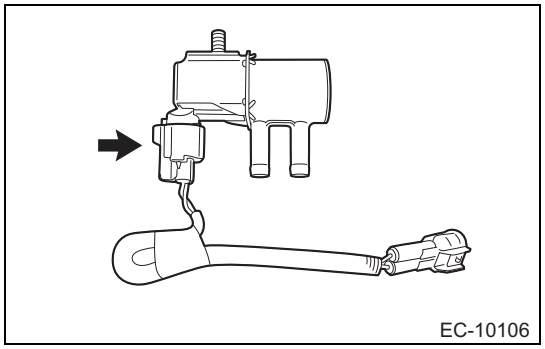

(6) Disconnect the joint wire harness connector from the purge control solenoid valve.

Installation

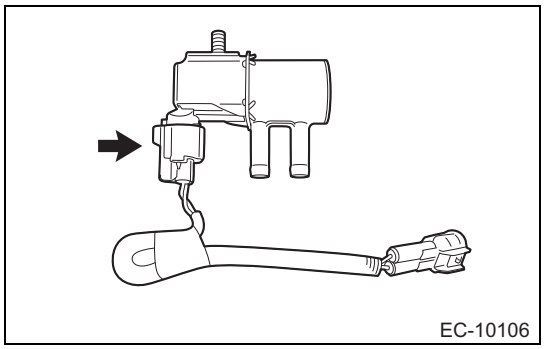

1. Installation of purge control solenoid valve
   (1) Connect the joint wire harness connector to the purge control solenoid valve.
   (2) Connect the fuel vapor feed hose No. 1 and fuel vapor feed hose No. 2 to the purge control solenoid valve.
   (3) Connect the ventilation hose No. 2 to the air intake boot. (Transmission A/T)
   (4) Connect the vacuum sensor connector. (Transmission A/T)
   (5) Connect the purge control solenoid valve connector.
   (6) Using the nut, install the purge control solenoid valve.
   Standard value:T=6.4N·m {65kgf·cm} {4.7ft·lbf}
2. Installation of engine cover SUB-ASSY No. 1 (transmission A/T) (Refer to IE - 28)

Unit inspection

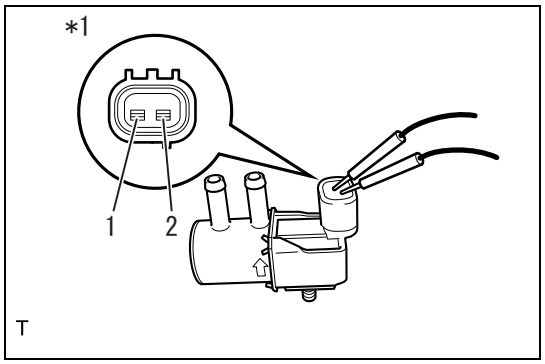

1. Inspection of purge control solenoid valve
   (1) Resistance check
   (a)Measure the resistance between the terminals.

Resistance

Inspection terminals	Inspection conditions	Standard value
1 - 2	20°C{68°F}	21 to 27 Ω
1 - chassis ground	Always	10 MΩ or more
2 - chassis ground	Always	10 MΩ or more

Captions in illustration

*1	Connector not connected (purge control solenoid valve)

NOTE:
If it is out of standard value, replace the purge control solenoid valve.

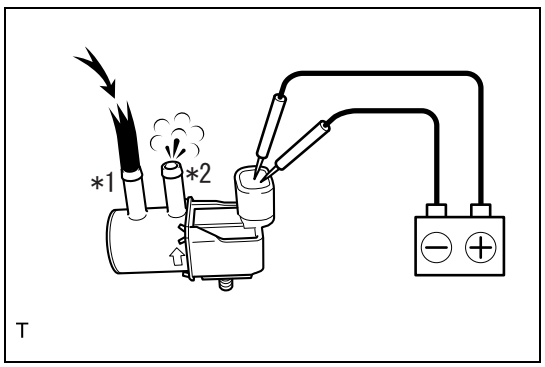

(2) Operation check
(a)Apply the battery voltage between the terminals of the purge control solenoid valve, and check if air flow is present between the ports E and F when the coil is energized or de-energized.

Criteria

Measurement condition	Criteria
Energized	Air vent present
Not energized	No air vent

Captions in illustration

*1	Port E
*2	Port F

➡	Air

NOTE:
If it is out of standard value, replace the purge control solenoid valve.

Fuel tank cap ASSY (FA20)

Unit inspection

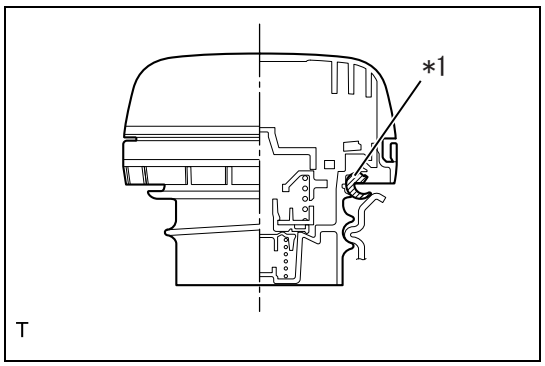

1. Check fuel tank ASSY check
   (1) Visually check the cap gasket for distortion or damage.

Captions in illustration

*1	Gasket

PCV valve (FA20)

Exploded view

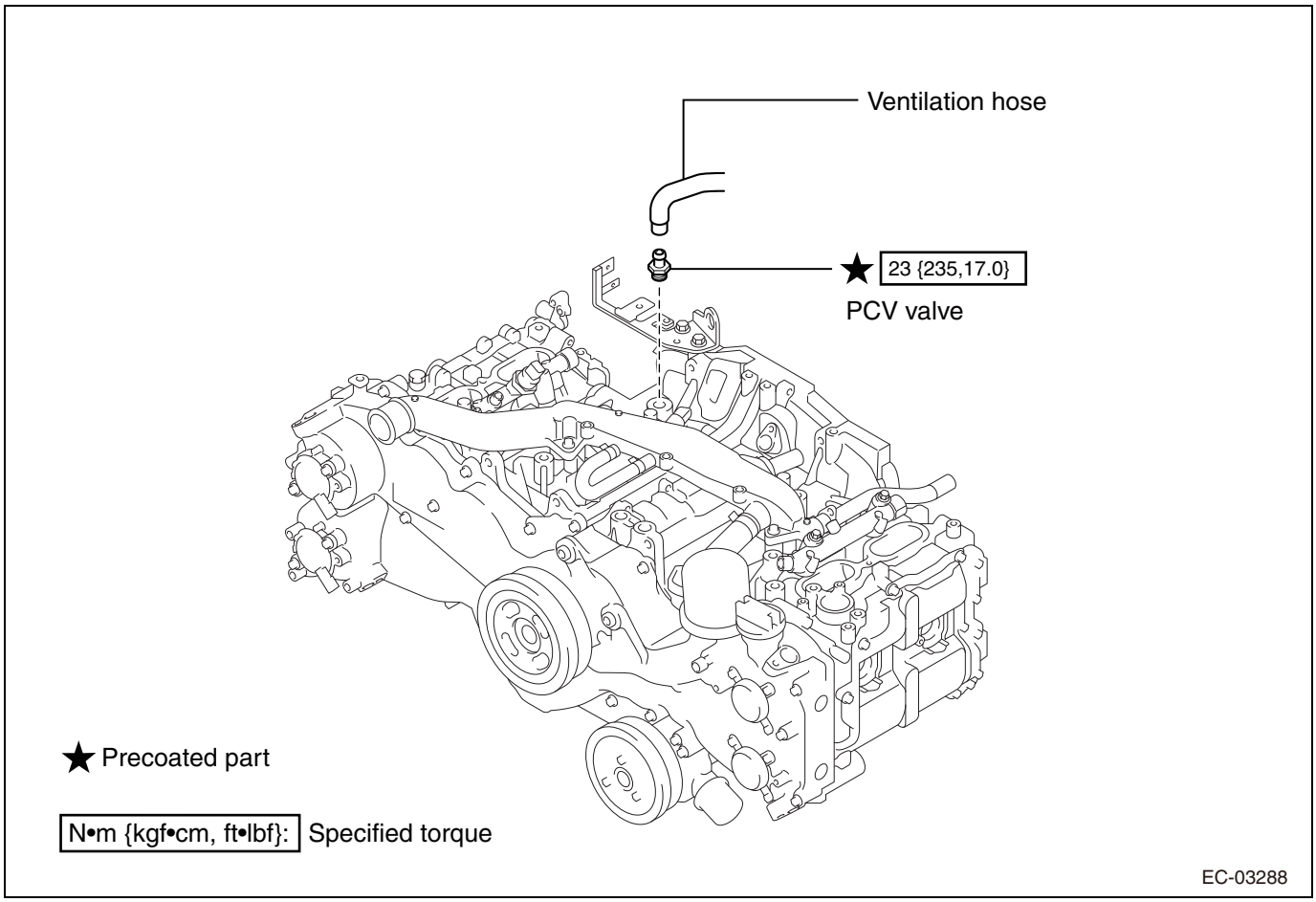

EC

Removal

1. Removal of intake manifold (See page IE - 17)

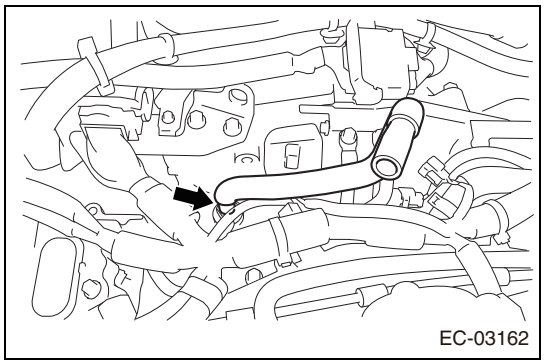

2. Removal of PCV valve
   (1) Remove the ventilation hose.

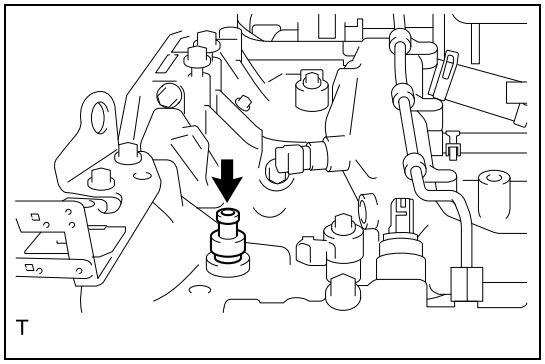

(2) Remove the PCV valve from the cylinder head RH.

Installation

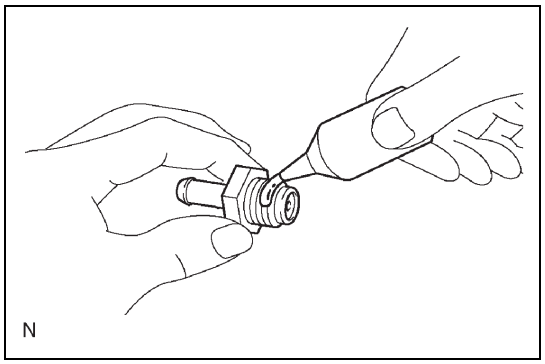

1. Installation of PCV valve
   (1) Apply THREE BOND 1324 to the PCV valve.
   (2) Install the PCV valve to the cylinder head RH.
   Standard value:T=23N·m {235kgf·cm} {17.0ft·lbf}
   (3) Connect the ventilation hose to the PCV valve.
2. Installation of intake manifold (See page IE - 28)

Unit inspection

1. PCV valve inspection
   (1) Operation check
   (a)Install the hose to the PCV valve.

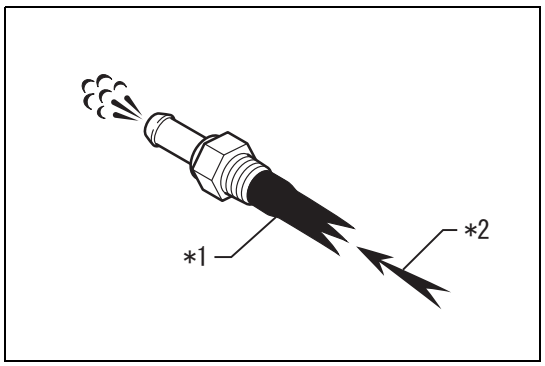

(b)Check that air comes out easily when air is blown into the hose from the cylinder head side.

Captions in illustration

*1	Hose
*2	Air

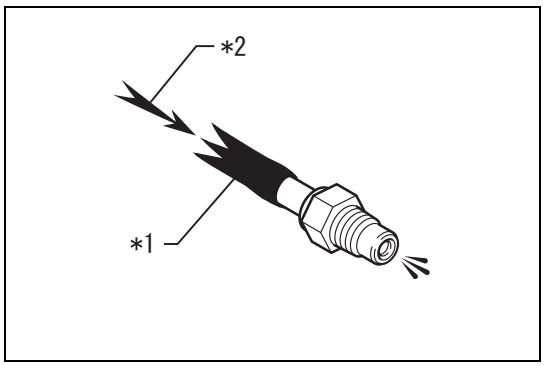

(c)Check that air does not comes out easily when air is blown into the valve from the intake manifold side.

Captions in illustration

*1	Hose
*2	Air

(d)Remove the hose from the PCV valve.

Intake / exhaust

Intake system (FA20)
- Parts location IE-2
- On-vehicle inspection IE-4
- Circuit figure IE-8

Intake manifold ASSY (FA20)
- Exploded view IE-10
- Removal IE-15
- Disassembly IE-21
- Reassembly IE-25
- Installation IE-28

Chamber (FA20)
- Exploded view IE-30
- Removal IE-31
- Installation IE-32
- Unit inspection IE-33

Exhaust manifold (FA20)
- Exploded view IE-34
- Removal IE-35
- Installation IE-36

Exhaust pipe ASSY (FA20)
- Exploded view IE-37
- Removal IE-39
- Installation IE-44

Intake system (FA20)

Parts location

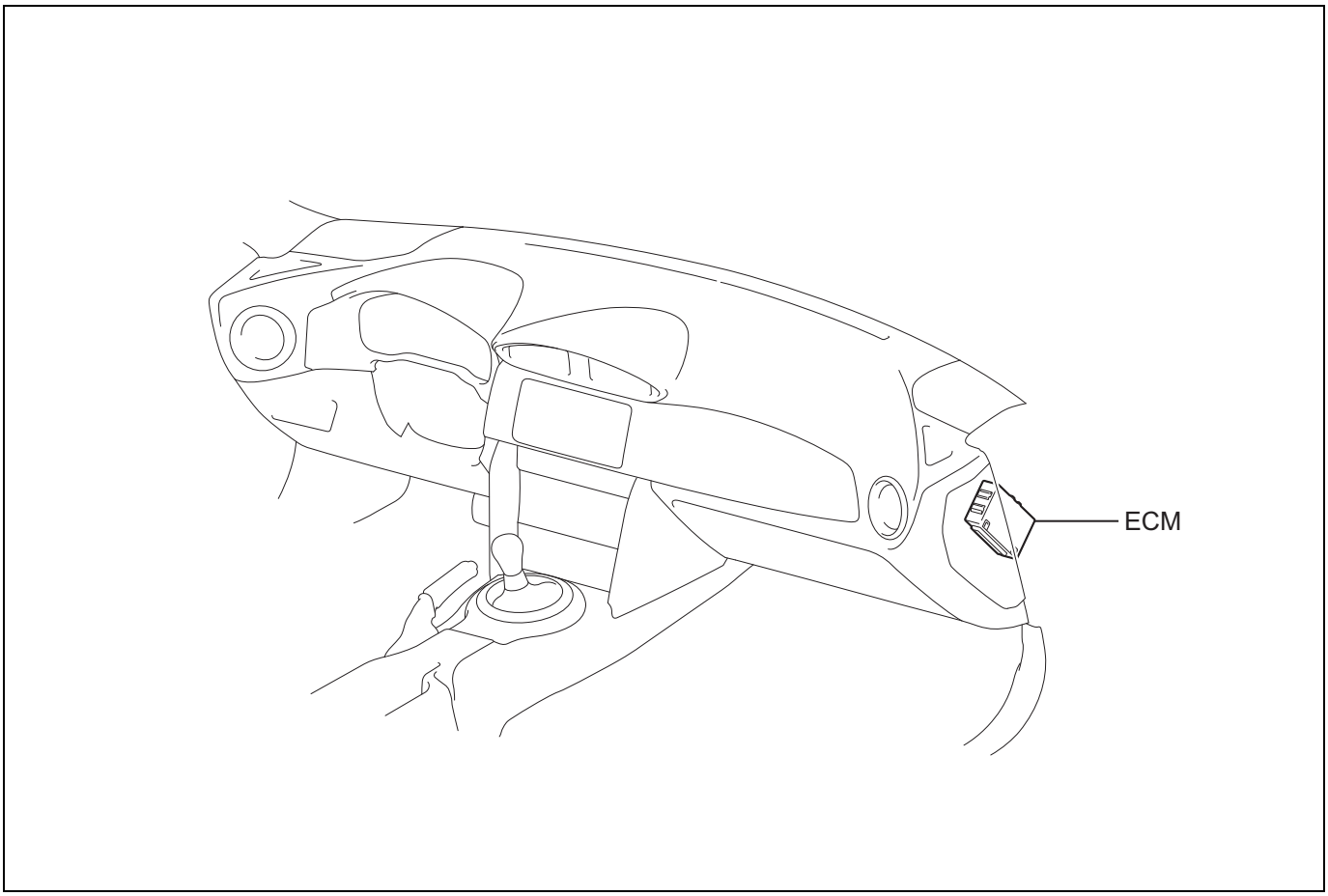

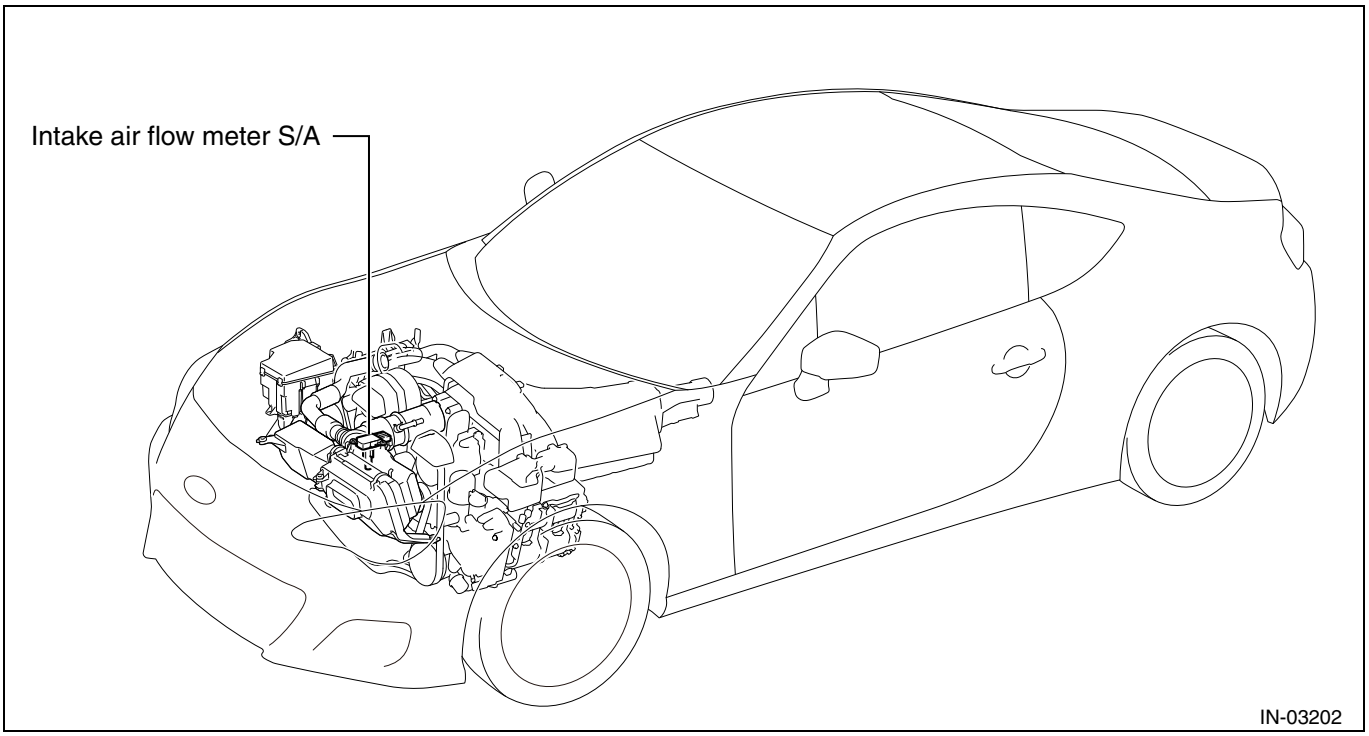

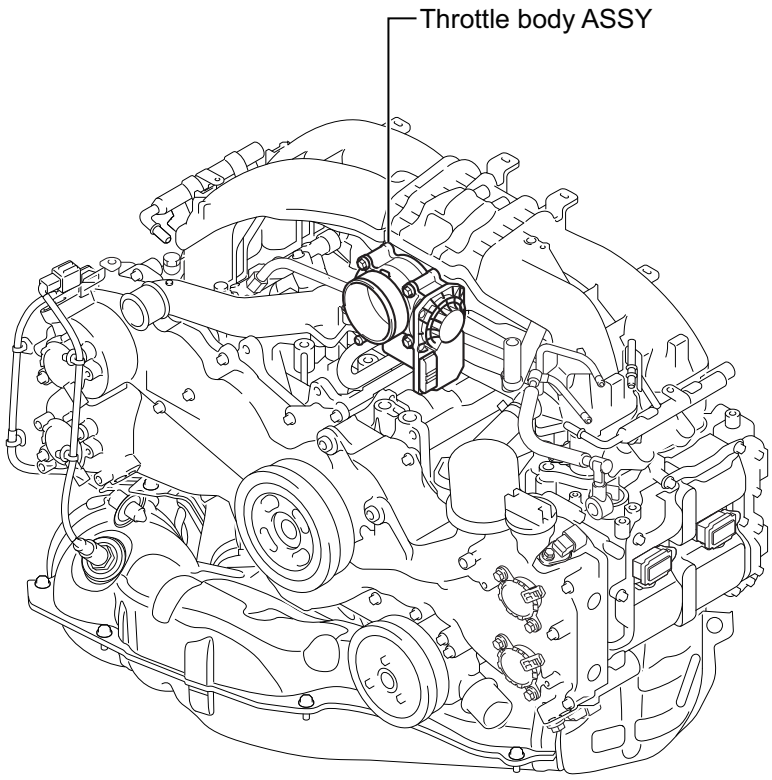

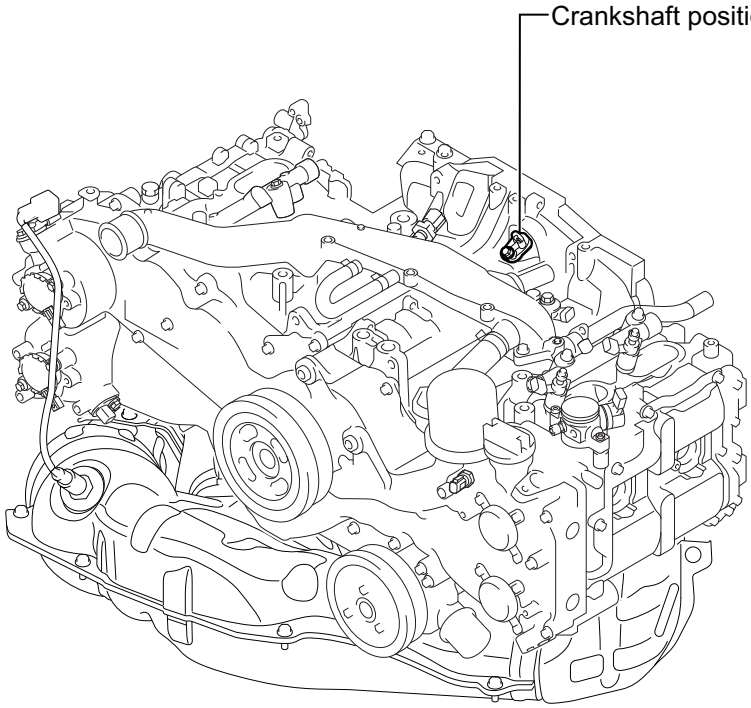

IN-10079

On-vehicle inspection

1. Visual inspection
   (1) Make sure that there is no air suction at the locations shown in the figure.

*A:

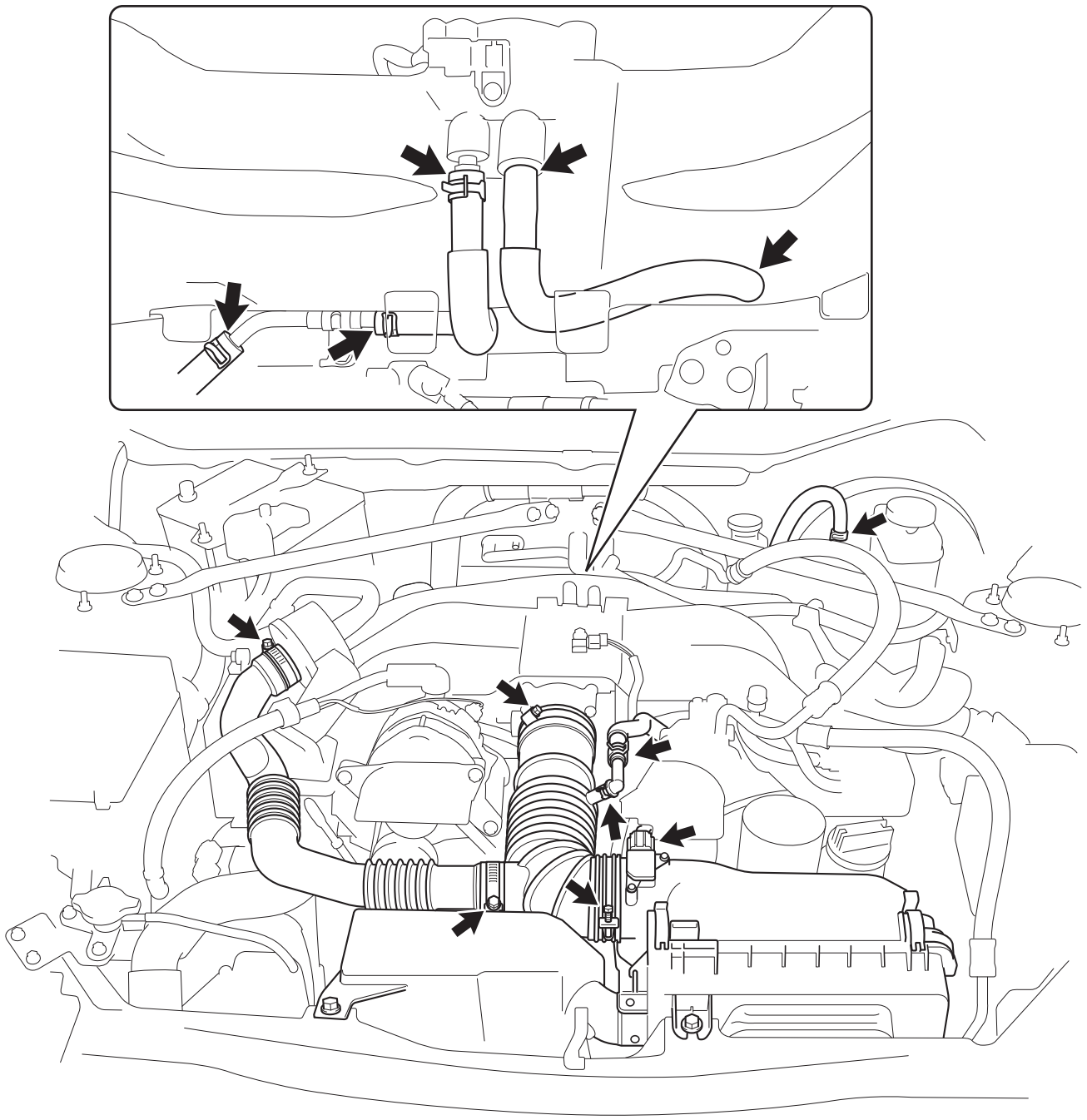

*B:

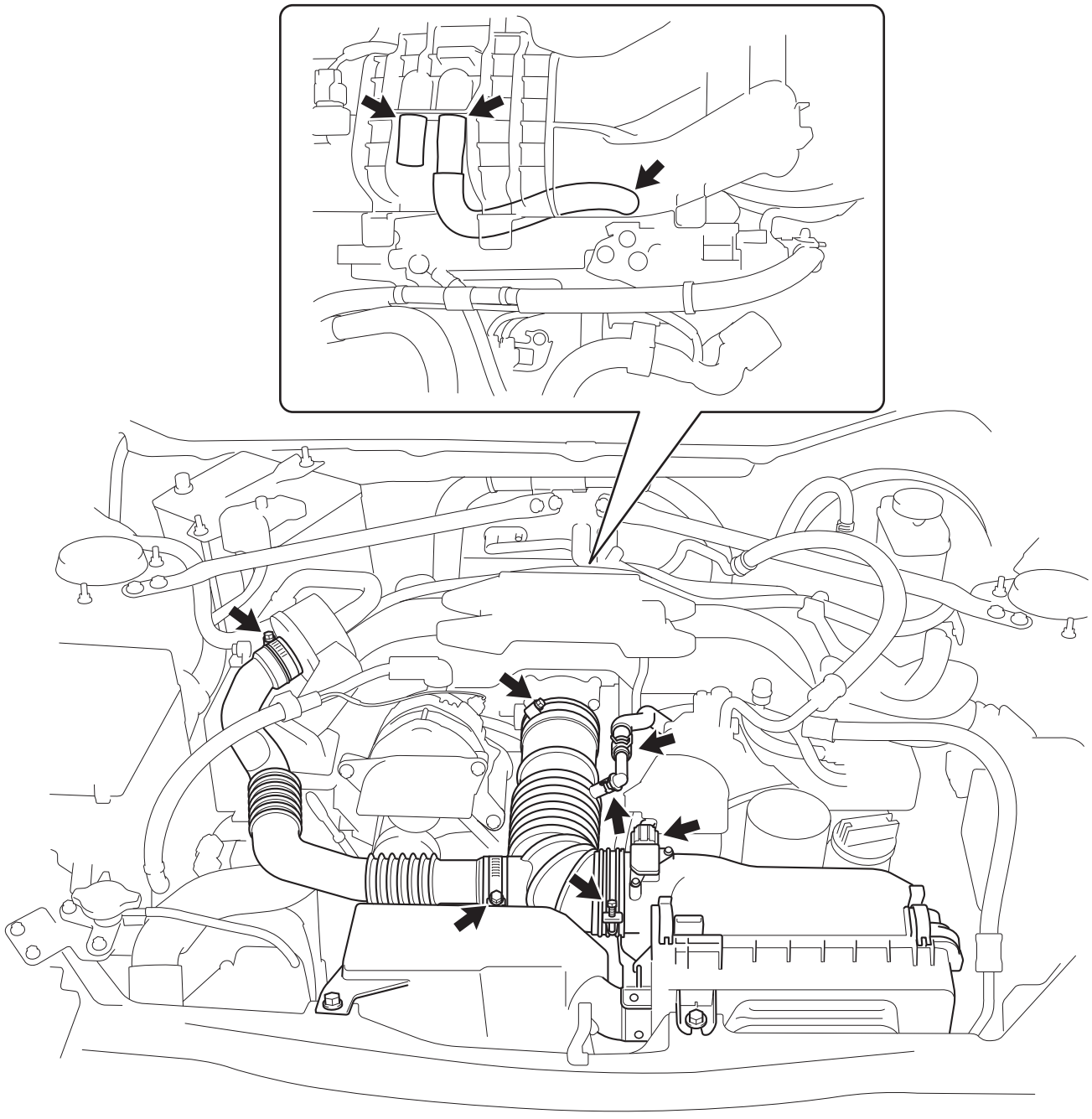

Captions in illustration

*A	Transmission M/T	*B	Transmission A/T

NOTE:
If the any of the parts on the intake side is disconnected, cracked or damaged, improper idling will be caused.

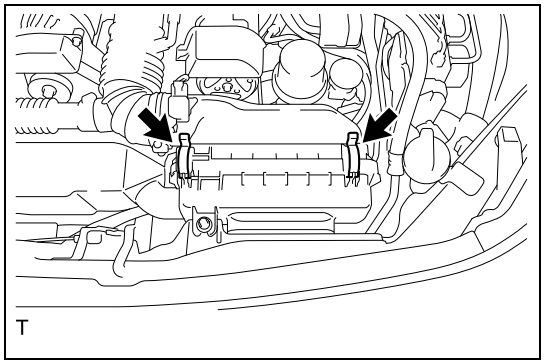
T

2. Check of air cleaner filter element SUB-ASSY
   (1) Remove the two clips from the air cleaner case (rear).

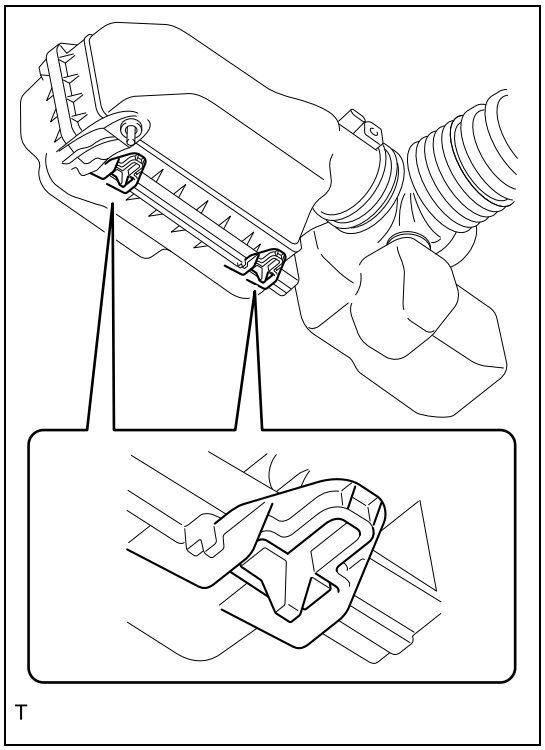
T

   (2) Lift the air cleaner case (rear) and release the two claws which engage in the air cleaner case (front).

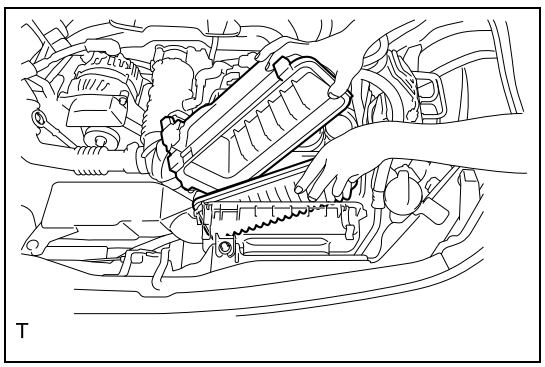
T

   (3) Lift the air cleaner case (rear) at an angle as shown in the figure and remove the air cleaner filter element.
   (4) Check the air cleaner filter element for excessive dirt.
   Criteria: Not excessively dirty
   CAUTION:
   If it is excessively dirty, replace the air cleaner filter element.
   (5) When cleaning the air cleaner filter element, clean it by blowing air.
   (6) Lift the air cleaner case (rear) at an angle and install the air cleaner filter element.
   (7) Engage the two claws of air cleaner case (rear) to the air cleaner case (front).

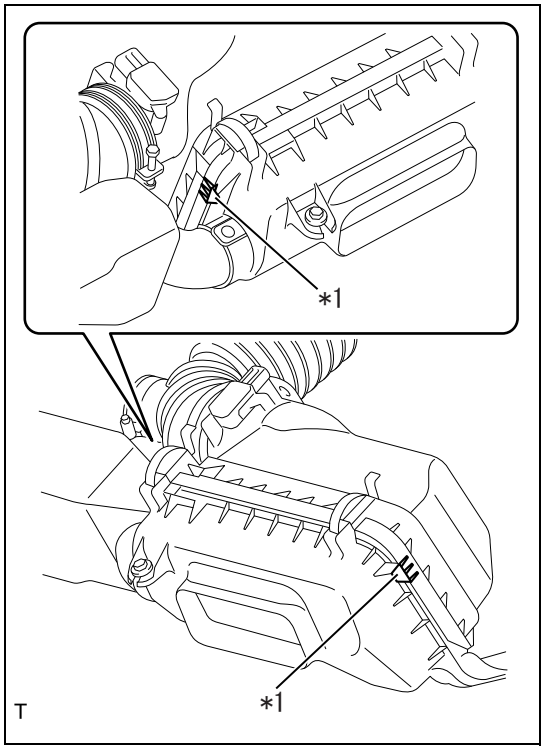

(8) Install the two clips.

CAUTION:

- Make sure that the positioning protrusions at the right and left sides of the air cleaner case do not ride over.
- Be sure to engage the two claws at the lower side of air cleaner case.

Captions in illustration

*1	Positioning protrusion

Circuit figure

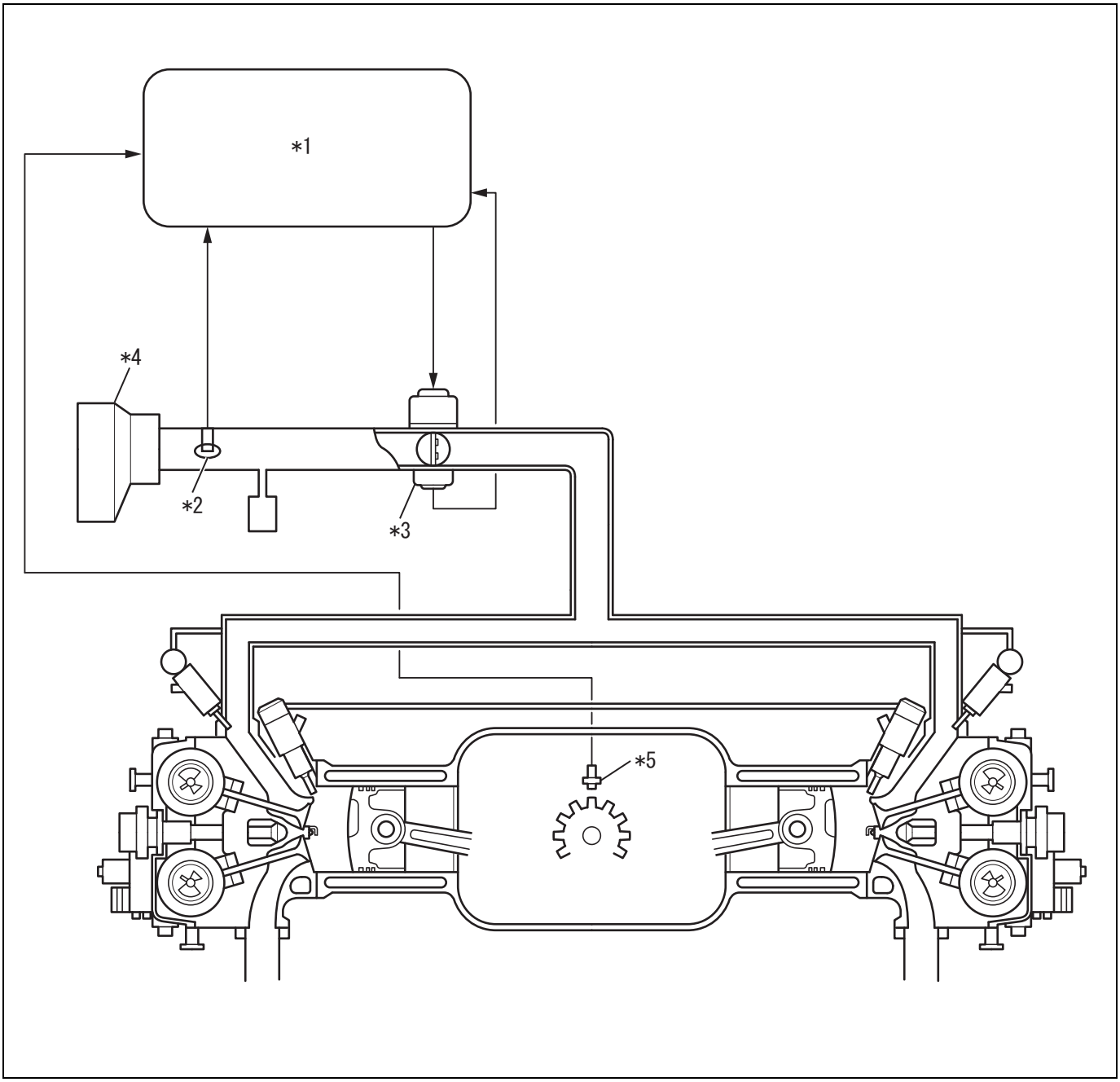

Captions in illustration

*1	Engine control computer	*2	Intake air flow meter ASSY
*3	Throttle body ASSY	*4	Air cleaner
*5	Crankshaft position sensor	-	-

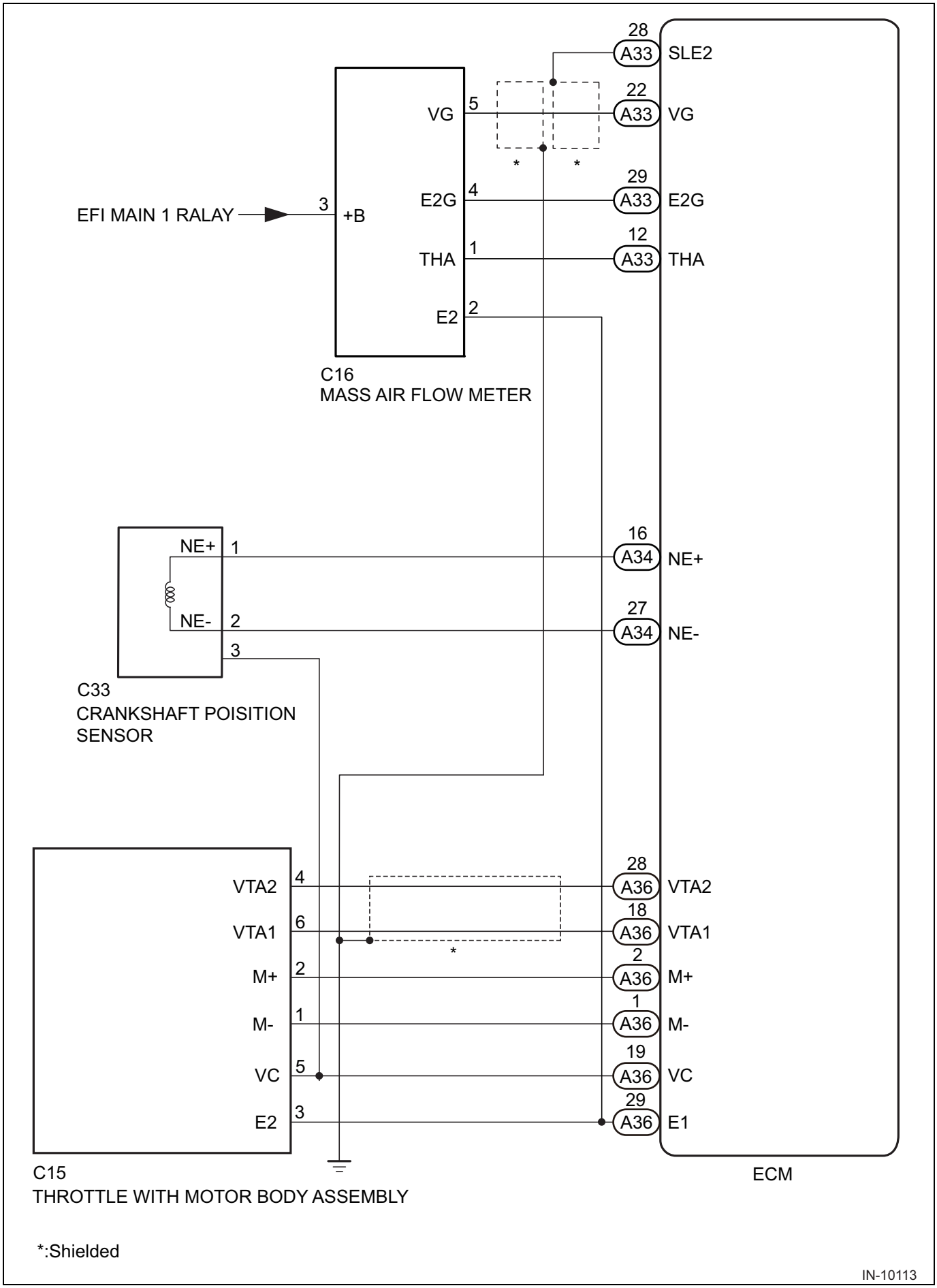
28
A33
SLE2
22
A33
VG
VG
5
*
*
29
A33
E2G
E2G
4
EFI MAIN 1 RALAY
3
+B
12
A33
THA
THA
1
E2
2
C16
MASS AIR FLOW METER
NE+
1
16
A34
NE+
NE-
2
27
A34
NE-
3
C33
CRANKSHAFT POISITION
SENSOR
28
A36
VTA2
VTA2
4
18
A36
VTA1
VTA1
6
*
2
A36
M+
M+
2
1
A36
M-
M-
1
19
A36
VC
VC
5
29
A36
E1
E2
3
C15
THROTTLE WITH MOTOR BODY ASSEMBLY
ECM
*:Shielded
IN-10113

IE

Intake manifold ASSY (FA20)

Exploded view

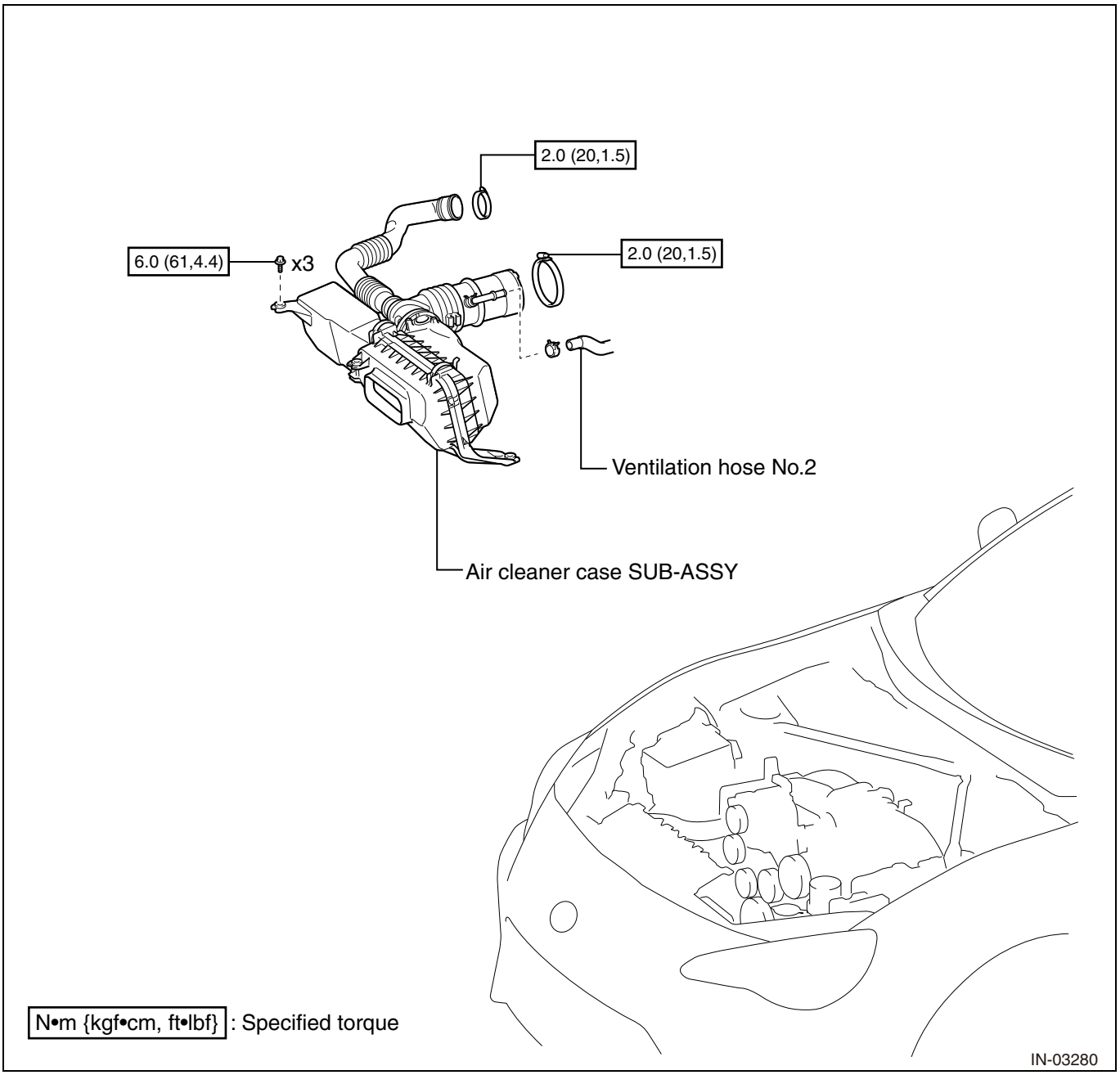

IE

Transmission A/T:

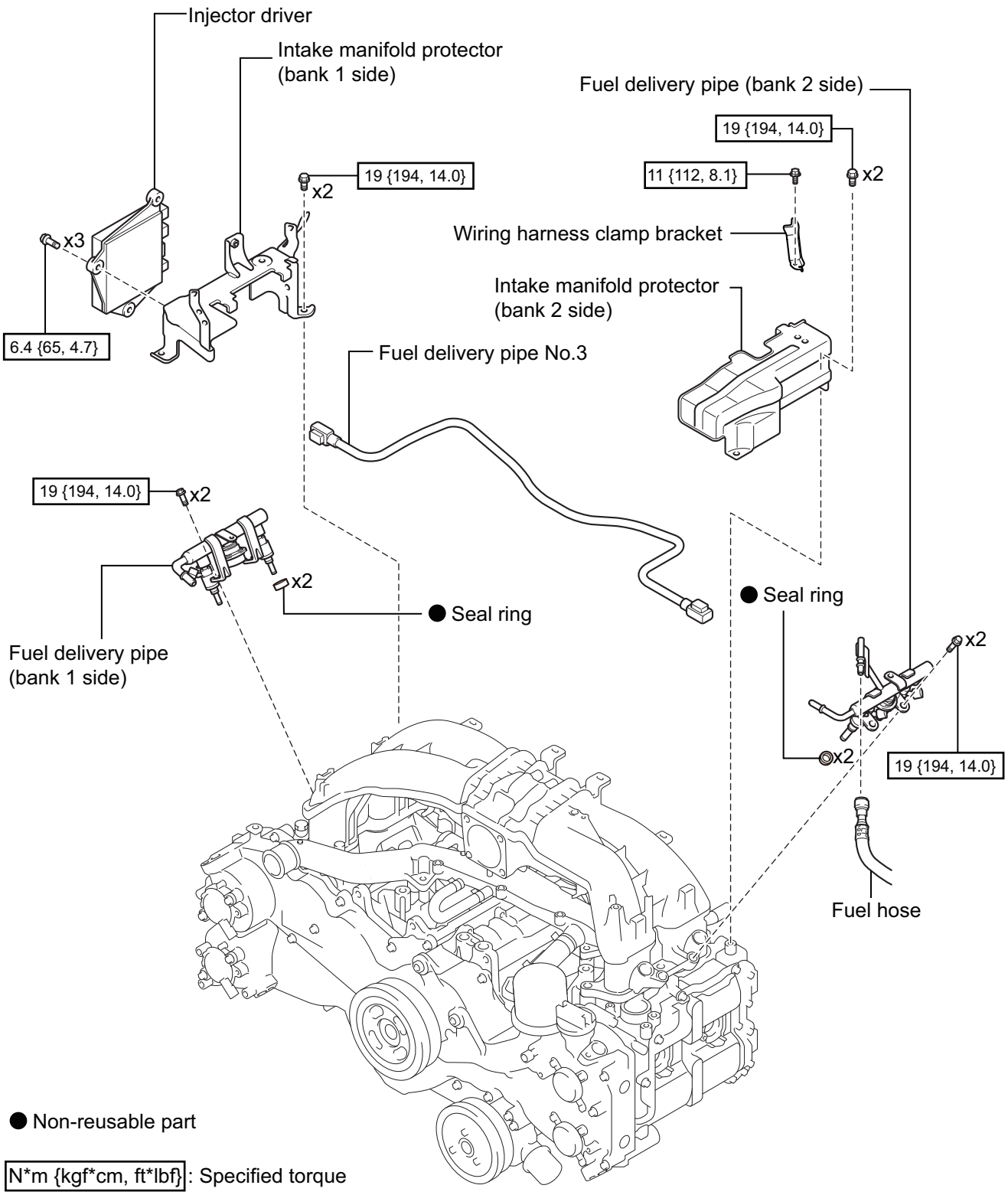

Transmission M/T:

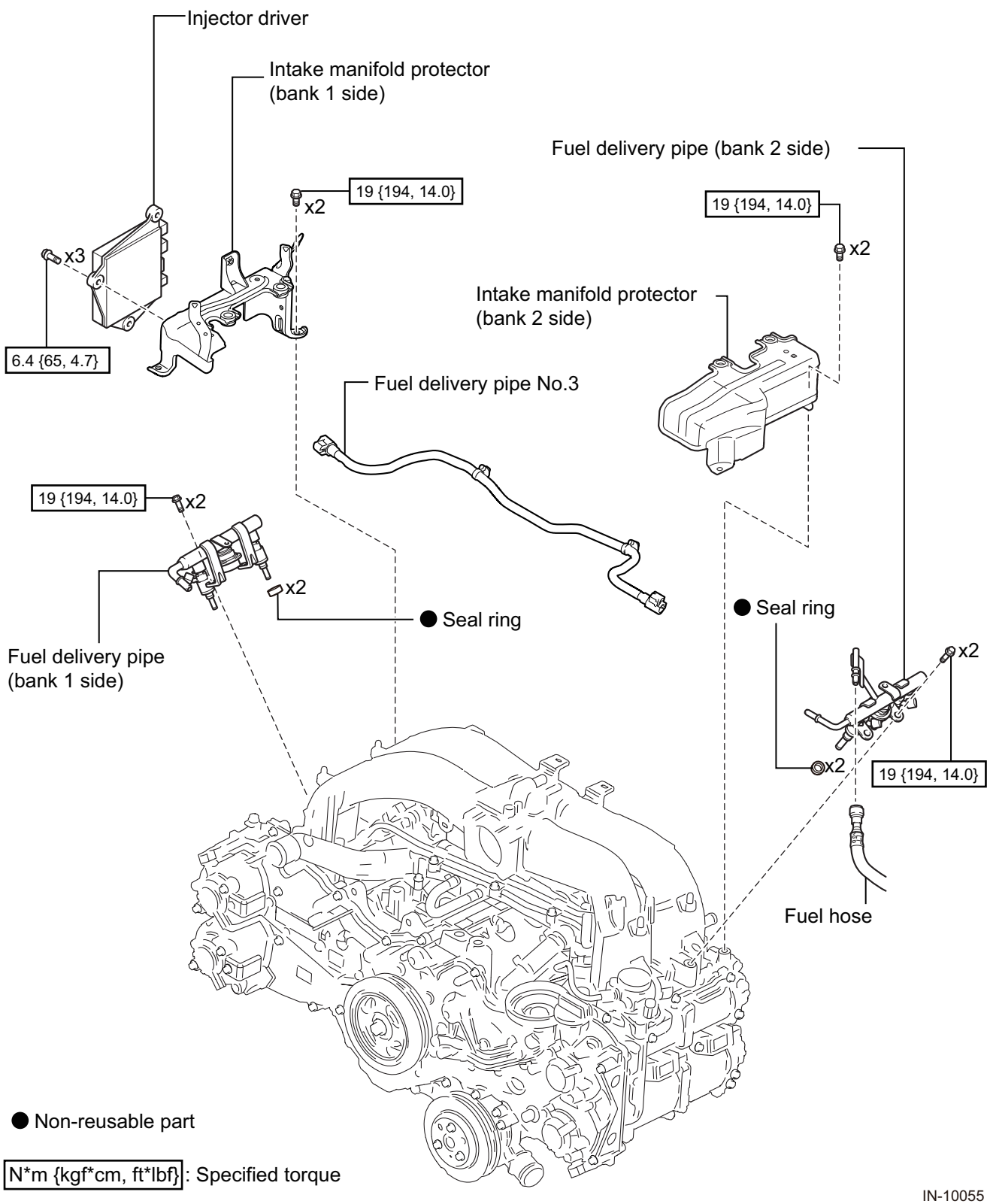

Transmission A/T:

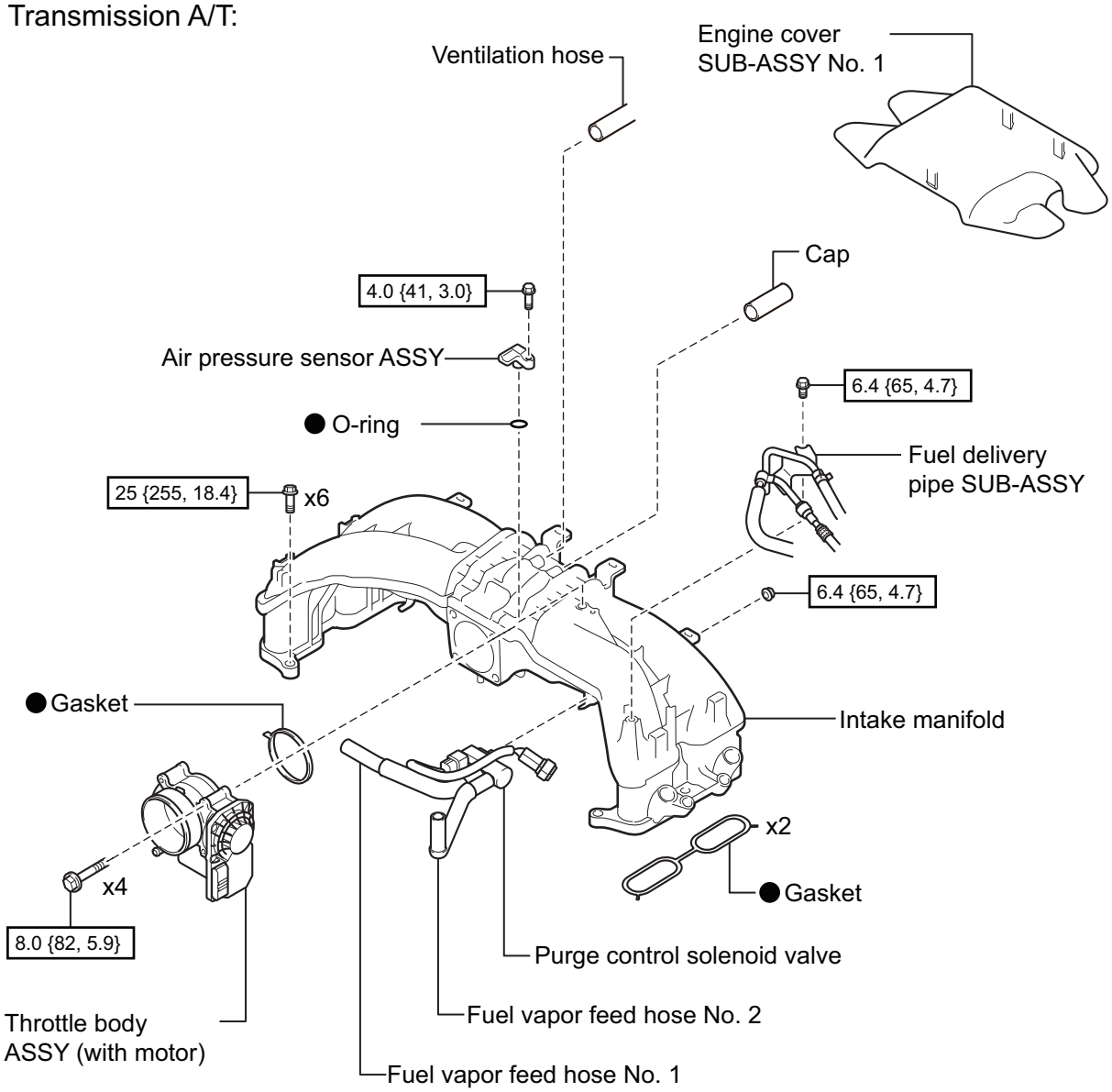

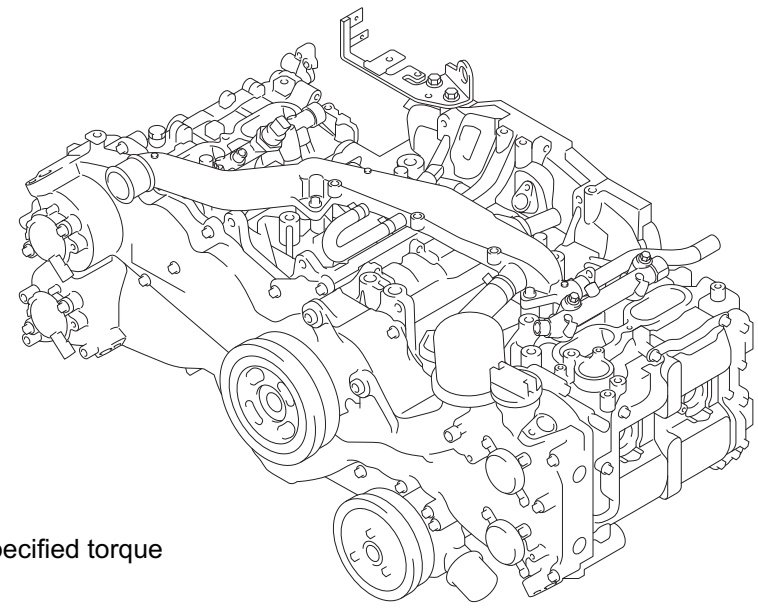

● Non-reusable part

N*m {kgf*cm, ft*lbf} : Specified torque

IN-10056

IE

Transmission M/T:

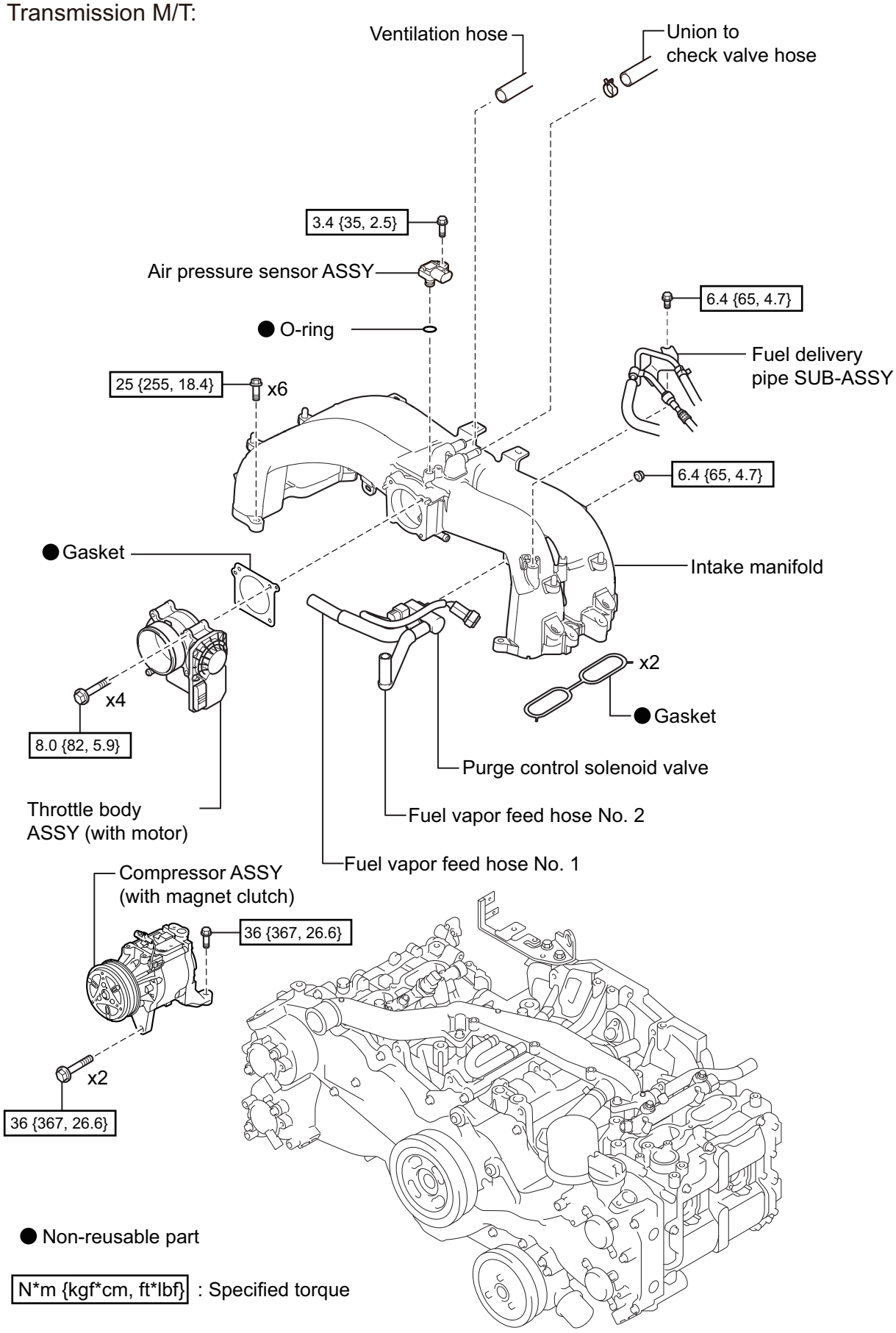

● Non-reusable part

N*m {kgf*cm, ft*lbf} : Specified torque

IN-10057

REMOVAL

1. CHECK FUEL PUMP OPERATION AND INSPECT FOR FUEL LEAK (See page FU - 3)
2. DISCONNECT CABLE FROM NEGATIVE BATTERY TERMINAL (See page IN - 6)
3. REMOVE AIR CLEANER CAP WITH AIR CLEANER HOSE (See page EM - 75)

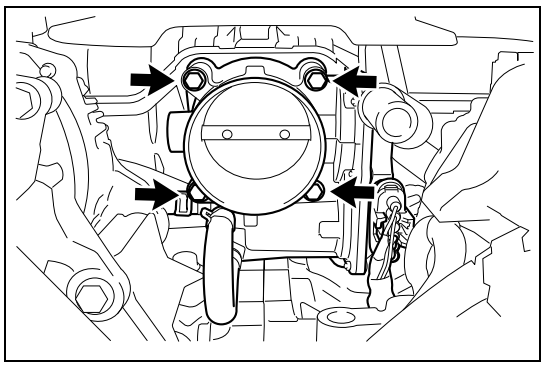

4. REMOVE THROTTLE WITH MOTOR BODY ASSEMBLY
   (1) Remove the 4 bolts and the throttle with motor body assembly.
5. DISCONNECT FUEL HOSE No. 1 (See page FU - 23)
6. DISCONNECT FUEL HOSE No. 2 (See page FU - 23)
7. DISCONNECT PURGE HOSE (See page FU - 23)
8. REMOVE INJECTOR DRIVER (See page FU - 43)
9. REMOVE INTAKE MANIFOLD PROTECTOR (for Bank 2) (See page FU - 23)
10. REMOVE INTAKE MANIFOLD PROTECTOR (for Bank 1) (See page FU - 22)

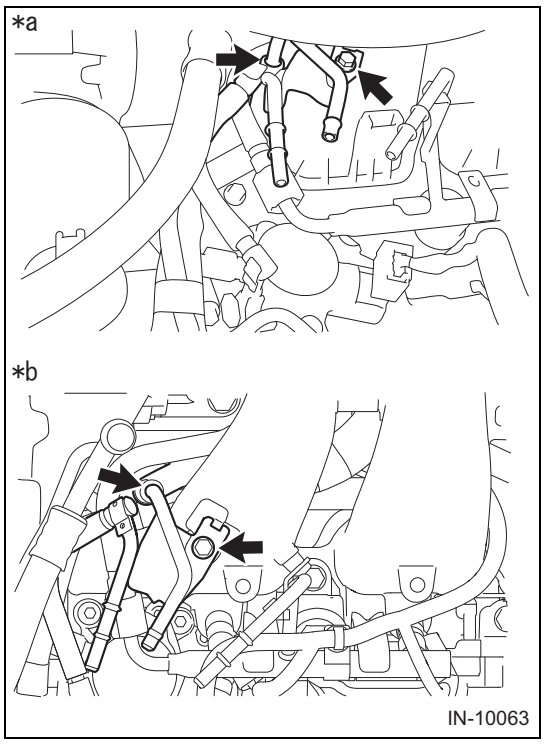

11. DISCONNECT FUEL DELIVERY PIPE SUB-ASSEMBLY
    (1) Remove the bolt and disconnect the fuel delivery pipe sub-assembly.
    (2) Disconnect the No. 2 fuel vapor feed hose and move the fuel delivery pipe toward the front of the vehicle.

Text in Illustration

*a	Transmission A/T
*b	Transmission M/T

IE

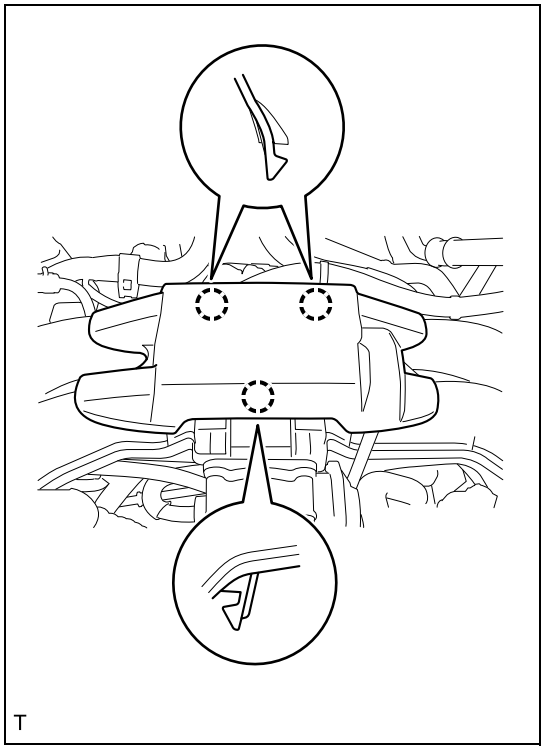
T

12. REMOVE NO. 1 ENGINE COVER SUB-ASSEMBLY (TRANSMISSION A/T)
    (1) Disengage the 3 craws and remove the No. 1 engine cover sub-assembly.
    NOTE:
    Release the tabs from the front side of the vehicle.

13. V-BELT REMOVAL (TRANSMISSION M/T) (See page EM - 5)

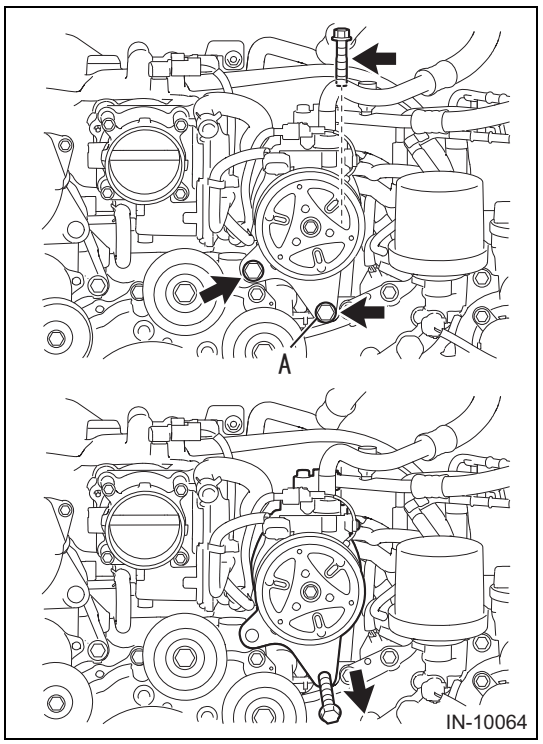

14. COMPRESSOR ASSY (WITH MAGNET CLUTCH) MOVING (TRANSMISSION M/T)
    (1) Remove the 3 bolts and hold the compressor ASSY (with magnet clutch) by hand.
    (2) Replace bolt A in the figure to a bolt of approximately 100 mm {3.937 in} in length, and move the compressor ASSY (with magnet clutch) towards the front of the vehicle.

15. DISCONNECT NO. 2 VACUUM HOSE (for Manual Transmission) (See page BR - 28)

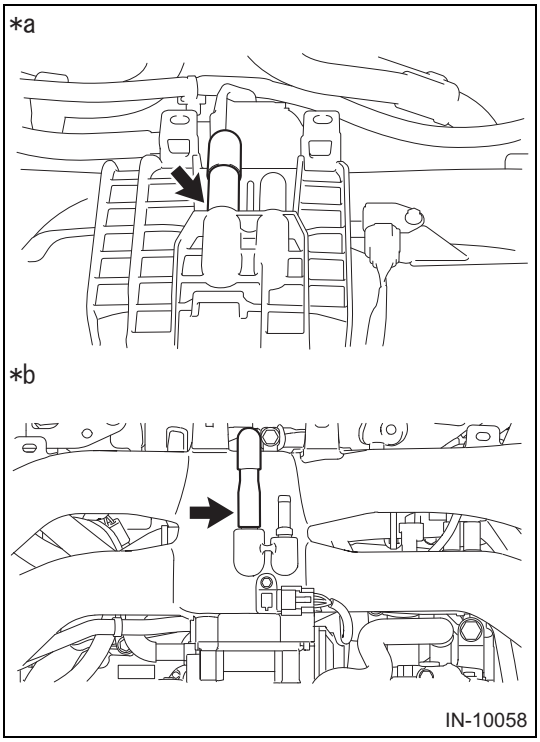

16. DISCONNECT VENTILATION HOSE
    (1) Disconnect the ventilation hose.

Text in Illustration

*a	Transmission A/T
*b	Transmission M/T

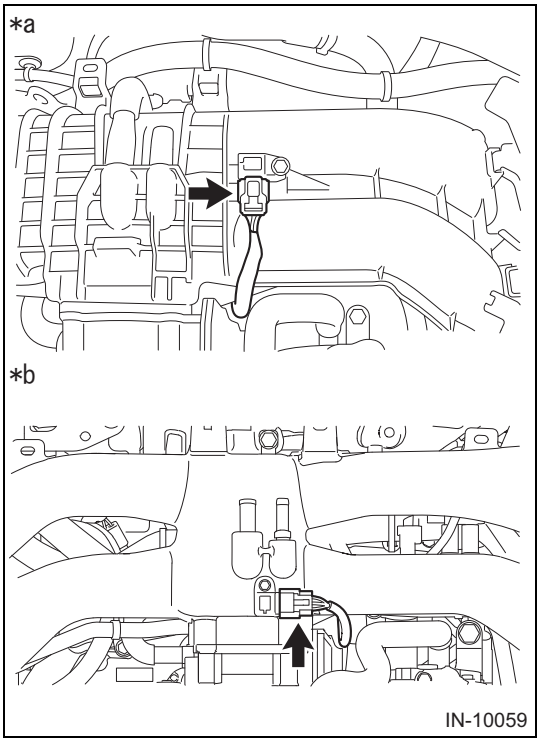

17. REMOVE INTAKE MANIFOLD
    (1) Disconnect the manifold absolute pressure sensor connector.

Text in Illustration

*a	Transmission A/T
*b	Transmission M/T

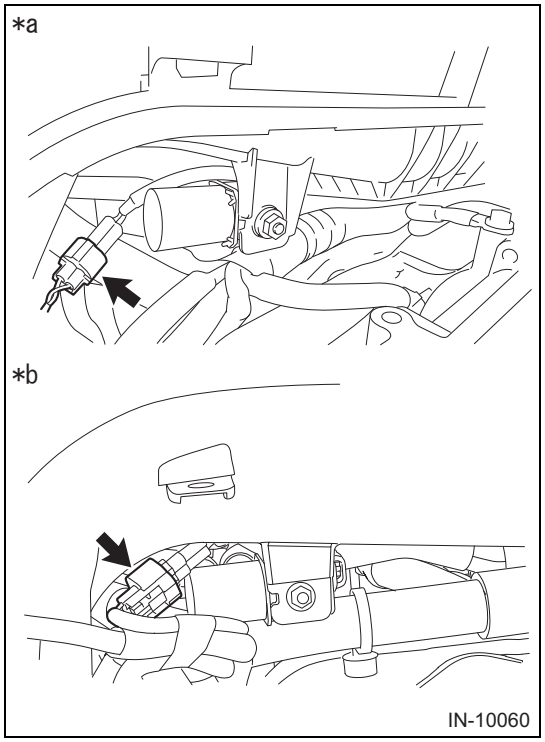

(2) Disconnect the purge control solenoid valve connector.

Text in Illustration

*a	Transmission A/T
*b	Transmission M/T

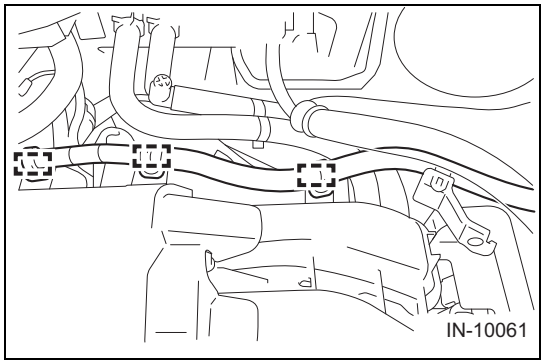

(3) Release the three clips and disconnect the wiring harness. (Transmission A/T)

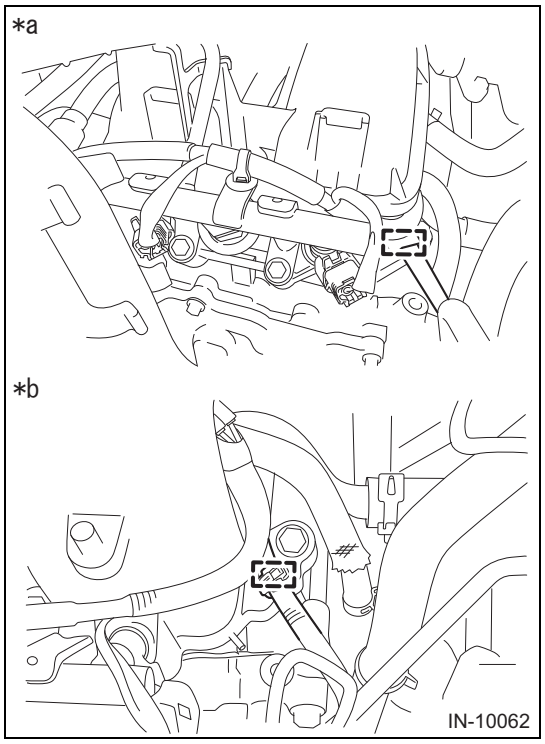

(4) Disengage the clamp and disconnect the engine wire harness.

Text in Illustration

*a	Transmission A/T
*b	Transmission M/T

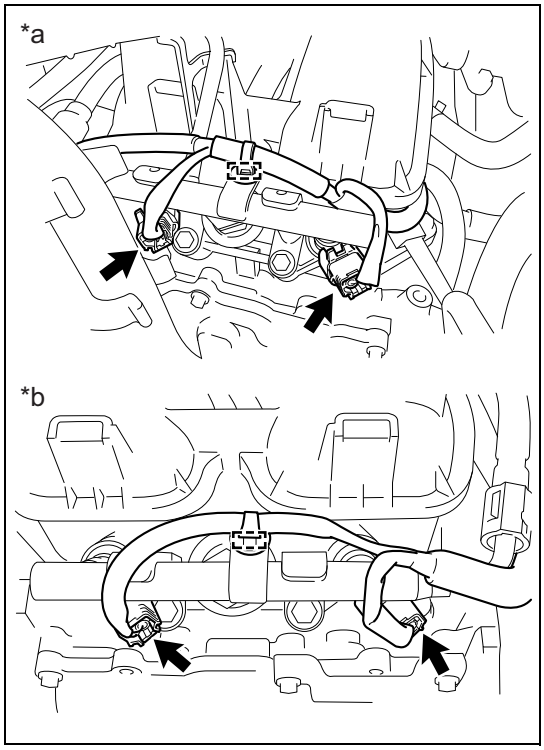

(5) Disengage the 2 clamps and disconnect the 4 connectors.

Text in Illustration

*a	Bank 2 Side
*b	Bank 1 Side

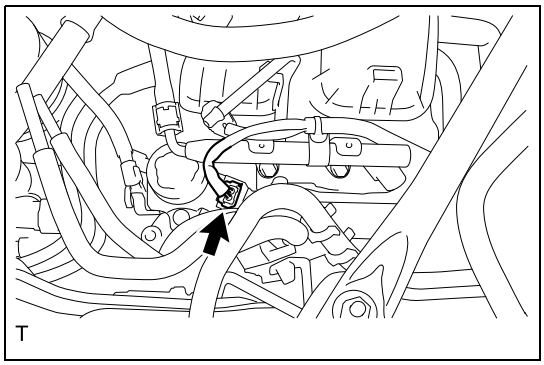

(6) Disconnect the fuel pump connector.

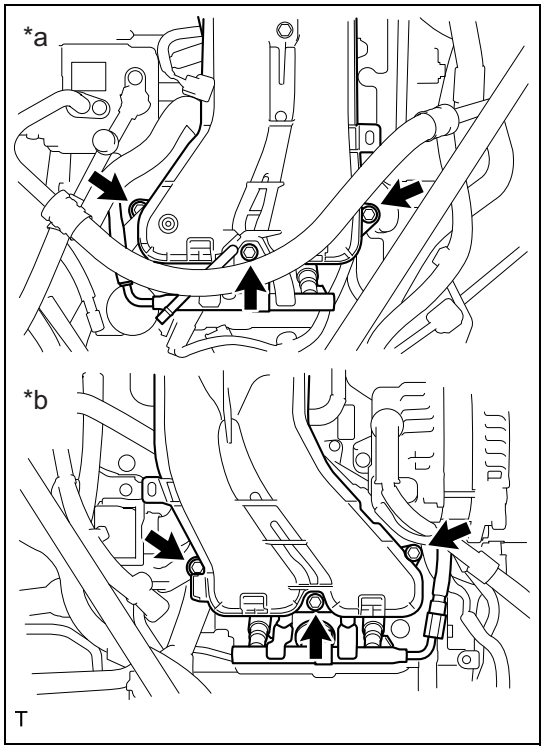

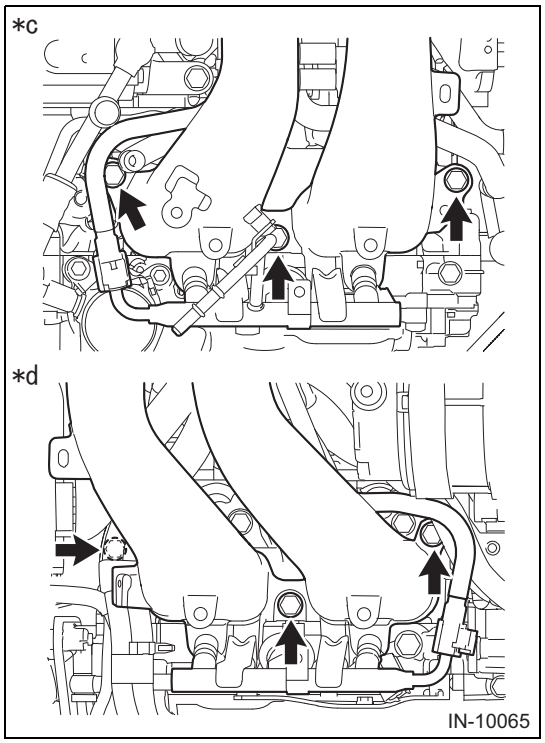

(7) Remove the 6 bolts, intake manifold and 2 gaskets.

Text in Illustration

*a	Bank 2 side (transmission A/T)
*b	Bank 1 side (transmission A/T)
*c	Bank 2 side (transmission M/T)
*d	Bank 1 side (transmission M/T)

DISASSEMBLY

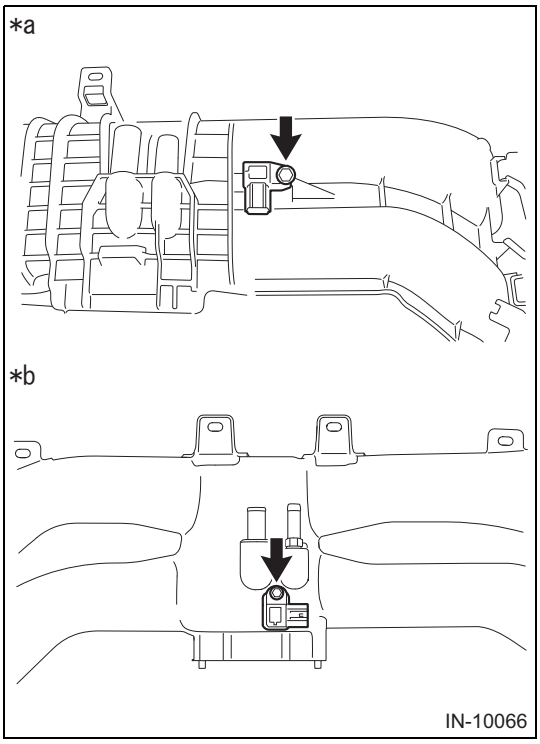

1. REMOVE MANIFOLD ABSOLUTE PRESSURE SENSOR
   (1) Remove the bolt and manifold absolute pressure sensor from the intake manifold.

Text in Illustration

*a	Transmission A/T
*b	Transmission M/T

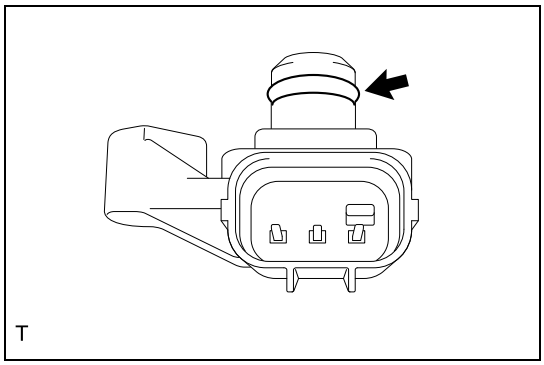

   (2) Remove the O-ring from the manifold absolute pressure sensor.

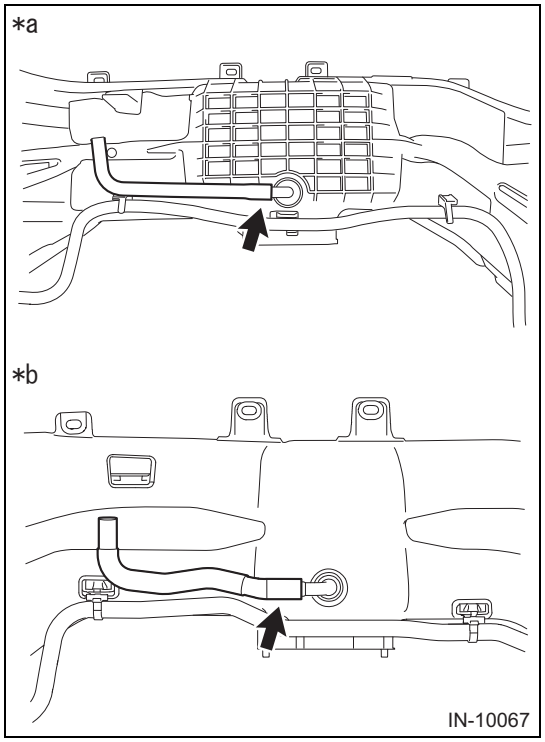

2. REMOVE PURGE CONTROL SOLENOID VALVE
   (1) Disconnect the No. 1 fuel vapor feed hose from the intake manifold.

Text in Illustration

*a	Transmission A/T
*b	Transmission M/T

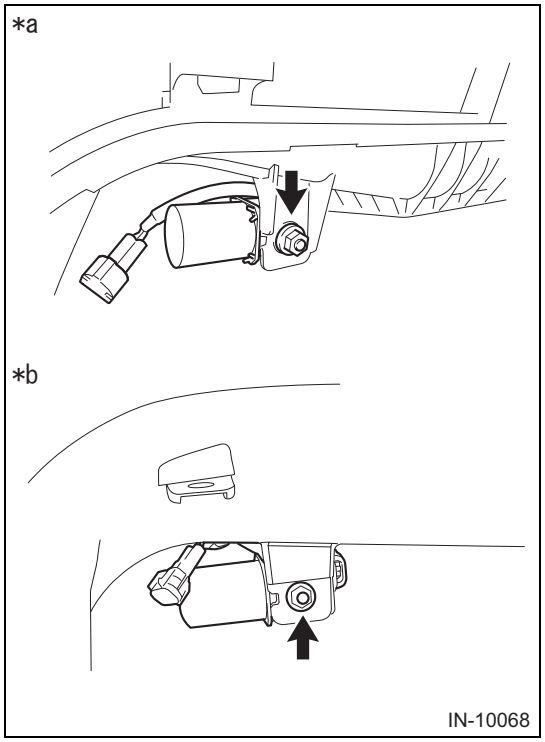

   (2) Remove the nut and purge control solenoid valve.

Text in Illustration

*a	Transmission A/T
*b	Transmission M/T

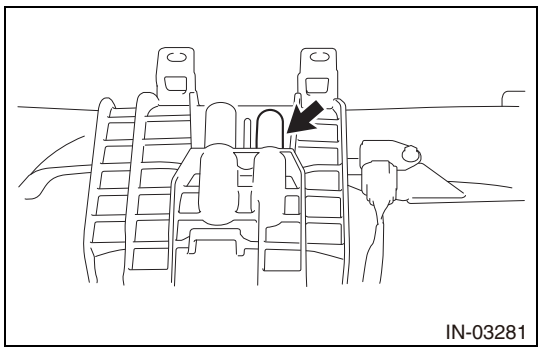

3. REMOVE CAP (for Automatic Transmission)
   (1) Remove the cap from the intake manifold.

4. REMOVE FUEL DELIVERY PIPE (for Bank 2)
   (1) Disconnect the No. 3 fuel delivery pipe sub-assembly from the fuel delivery pipe (for bank 2).
   CAUTION:
   - If the connector and pipe are stuck, pinch the fuel delivery pipe No. 3 by hand and push and pull the connector to disconnect it.
   - Do not allow any scratches or foreign matter on the parts when disconnecting them, as the No. 3 fuel delivery pipe joint contains the O-rings that seal the plug.
   - Do not use any tools to separate the pipe and connector.
   - Do not forcibly bend, twist or turn the nylon tube.
   - If the pipe and connector are stuck together, pinch the tube between your fingers and turn it carefully to free it. Then, disconnect the main tube.
   - Protect the disconnected part by covering it with a plastic bag and tape after disconnecting the main tube.
   - Check that the top hat cannot be pulled out.

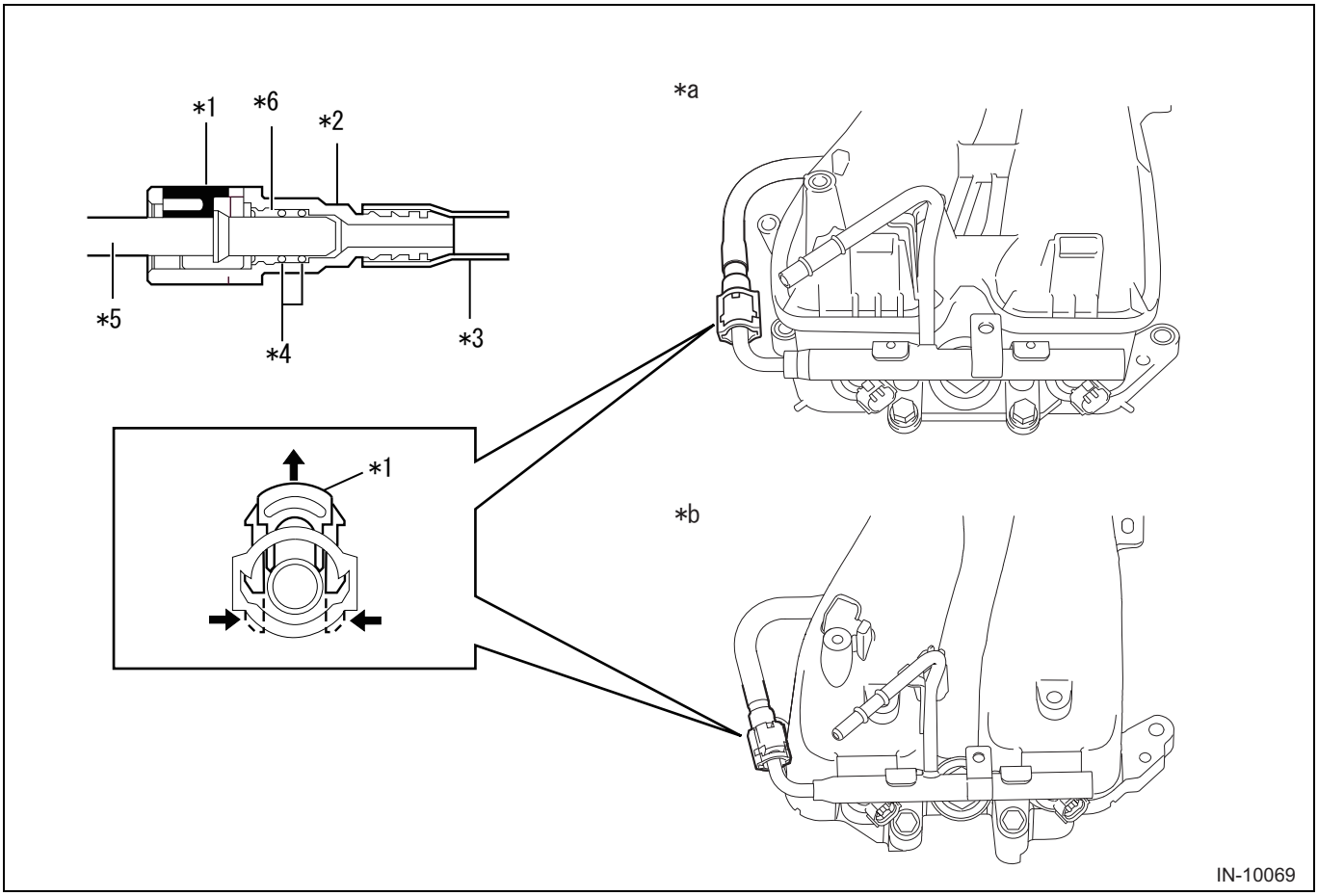

Text in Illustration

*a	Transmission A/T	*b	Transmission M/T
*1	Retainer	*2	No. 3 Fuel Delivery Pipe Connector
*3	Nylon Tube	*4	O-ring
*5	fuel delivery pipe	*6	Top Hat

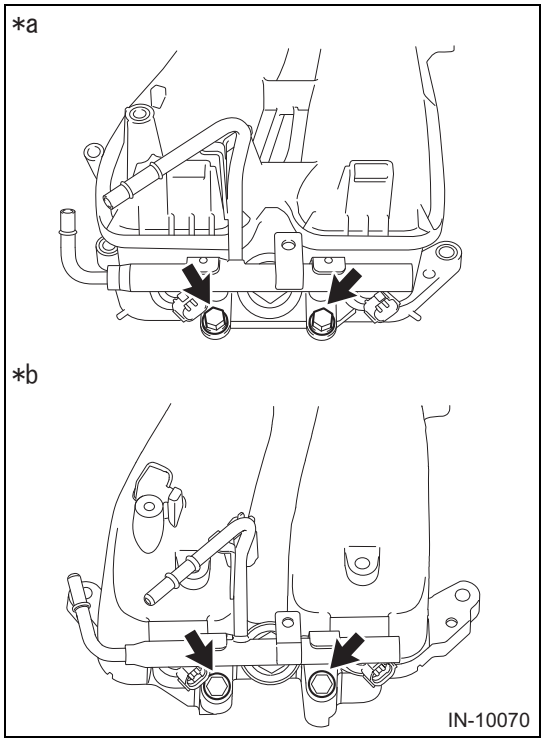

(2) Remove the 2 bolts and the fuel delivery pipe (for bank 2) from the intake manifold.

Text in Illustration

*a	Transmission A/T
*b	Transmission M/T

5. REMOVE FUEL DELIVERY PIPE (for Bank 1)
NOTE:
Use the same procedure described for the fuel delivery pipe (for bank 2).

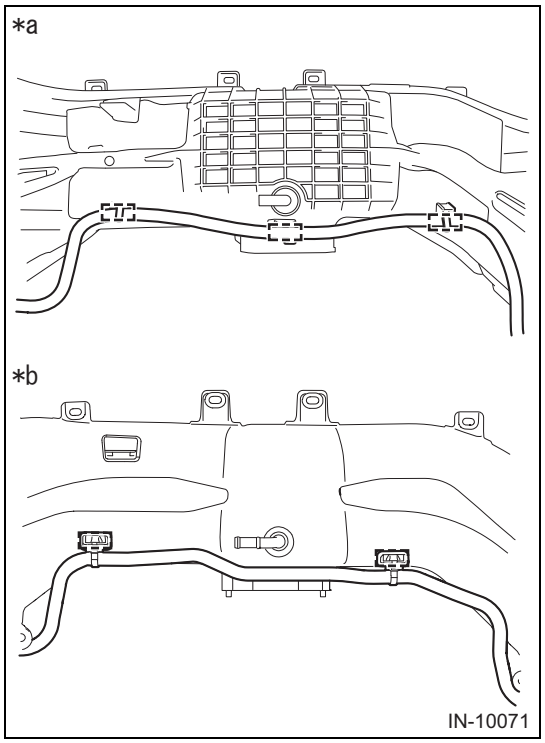

6. REMOVE NO. 3 FUEL DELIVERY PIPE
(1) Disengage the 3 clamps and remove the No. 3 fuel delivery pipe from the intake manifold. (Transmission A/T)
(2) Disengage the 2 clamps and remove the No. 3 fuel delivery pipe from the intake manifold. (Transmission M/T)

Text in Illustration

*a	Transmission A/T
*b	Transmission M/T

REASSEMBLY

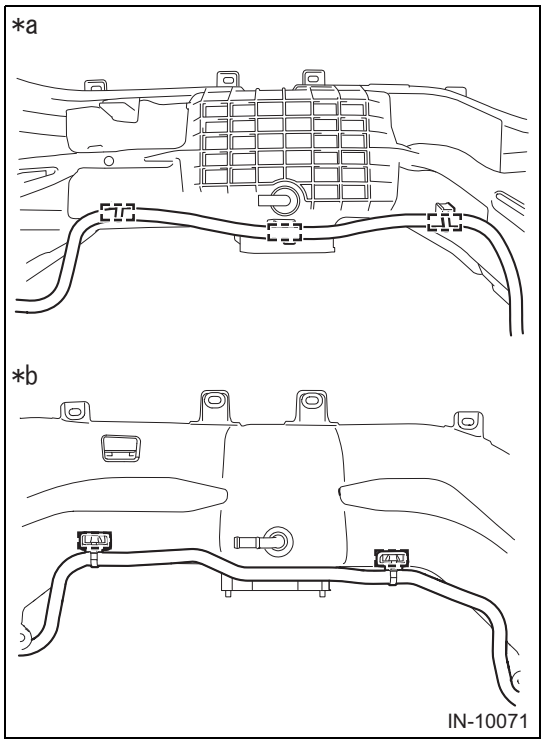

1. INSTALL NO. 3 FUEL DELIVERY PIPE
   (1) Install the No. 3 fuel delivery pipe to the intake manifold with the 3 clamps. (Transmission A/T)
   (2) Install the No. 3 fuel delivery pipe to the intake manifold with the 2 clamps. (Transmission M/T)

Text in Illustration

*a	Transmission A/T
*b	Transmission M/T

2. Fuel delivery pipe installation (bank 2 side)
   (1) Apply gasoline to two new seal rings and install them to the fuel injector ASSY.
   CAUTION:
   Make sure there is no damage to or foreign matter in seal ring grooves of the injector.
   (2) With the fuel injector ASSY installed on the fuel delivery pipe (bank 2 side), install it to the intake manifold.
   CAUTION:
   - Be careful not to twist the seal ring.
   - After it is attached to the fuel delivery pipe (bank 2 side), confirm that it can be rotated relatively lightly. If it cannot be rotated, remove the injector and repeat the work after replacing the seal rings with new ones.

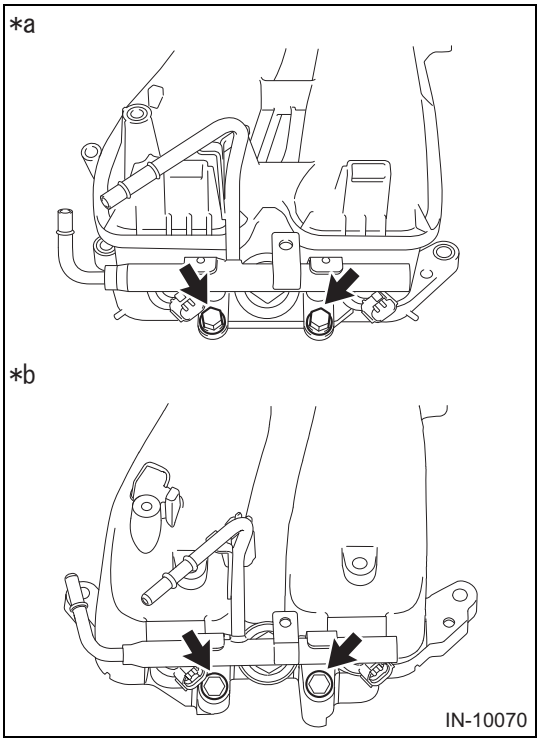

   (3) With 2 bolts, install the fuel delivery pipe (bank 2 side) to the intake manifold.
   Standard value:T=19N·m {194kgf·cm} {14ft·lbf}

Text in Illustration

*a	Transmission A/T
*b	Transmission M/T

(4) Align the axis of the fuel delivery pipe NO.3 connector and the axis of the pipe, connect them, and push the retainer until you hear the click.

CAUTION:

- Before starting the work, check that there is no damage to or foreign material on the fuel delivery pipe NO.3 connector and the pipe connection.
- After connecting fuel delivery pipe NO.3, check that the fuel delivery pipe NO.3 connector and the pipe are securely attached.

3. INSTALL FUEL DELIVERY PIPE (for Bank 1)

NOTE:

Use the same procedure described for the fuel delivery pipe (for bank 2).

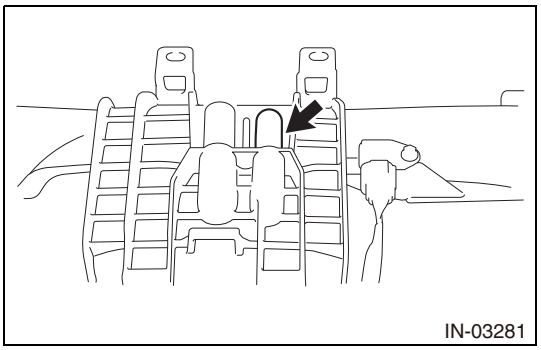

4. INSTALL CAP (for Automatic Transmission)

(1) Install the cap to the intake manifold.

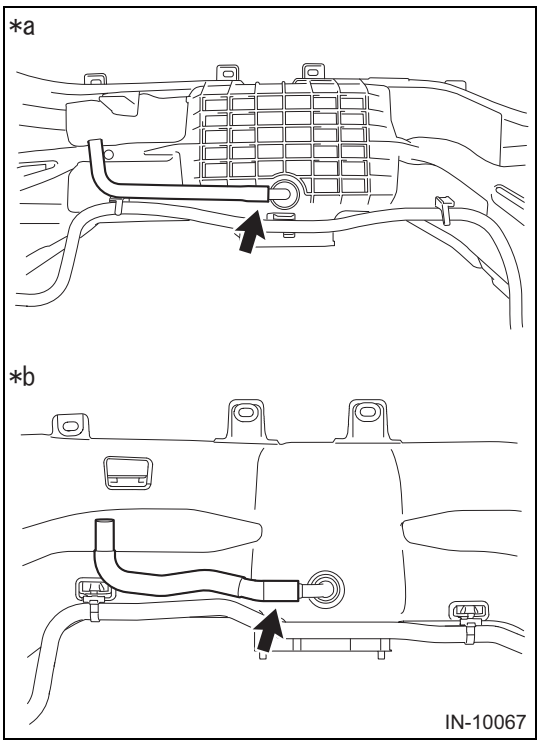

5. INSTALL PURGE CONTROL SOLENOID VALVE

(1) Connect the No.1 fuel vapor feed hose to the intake manifold.

Text in Illustration

*a	Transmission A/T
*b	Transmission M/T

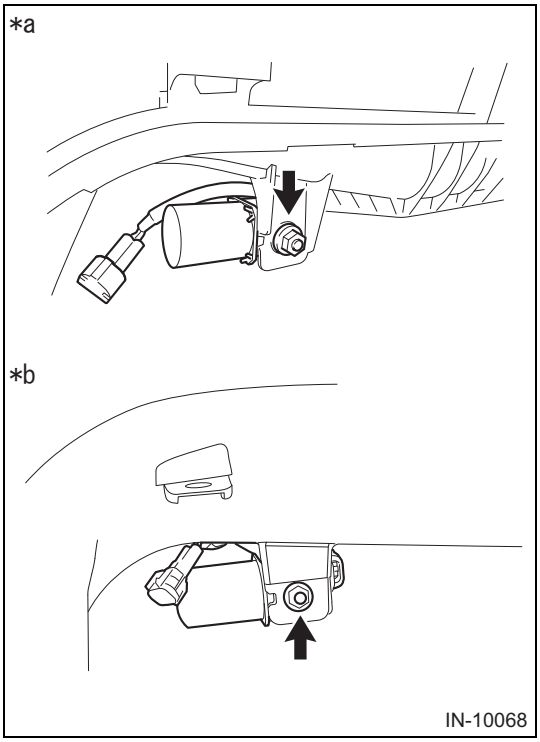

(2) Install the nut and purge control solenoid valve to the intake manifold.
Standard value:T=6.4N·m {65kgf·cm} {4.7ft·lbf}

Text in Illustration

*a	Transmission A/T
*b	Transmission M/T

6. INSTALL MANIFOLD ABSOLUTE PRESSURE SENSOR
(1) Apply engine oil to the contact surfaces of the new O-ring on manifold absolute pressure sensor.

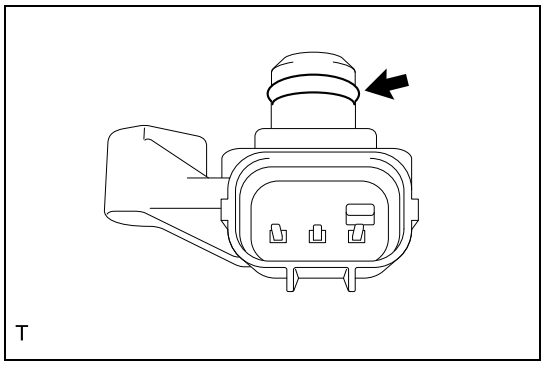

(2) Install a new O-ring to the manifold absolute pressure sensor.

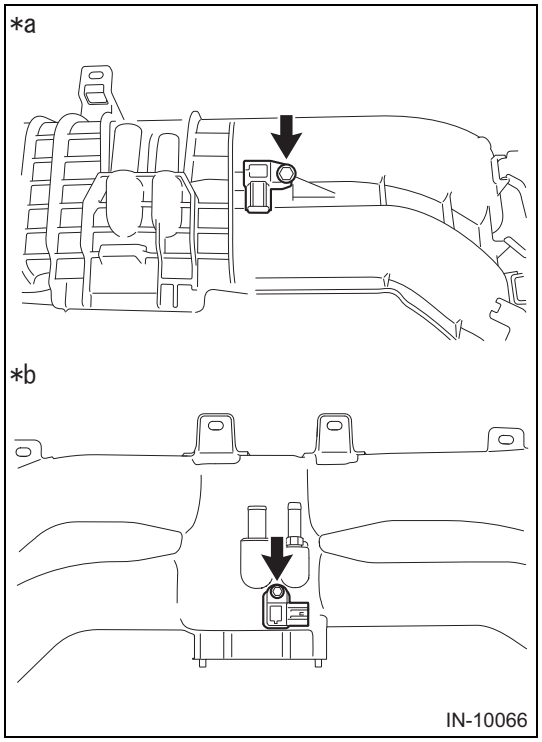

(3) Install the manifold absolute pressure sensor to the intake manifold with the bolt.
Standard value:T=4.0N·m {41kgf·cm} {3.0 ft·lbf} (Transmission A/T)
Standard value:T=3.4N·m {35kgf·cm} {2.5 ft·lbf} (Transmission M/T)

Text in Illustration

*a	Transmission A/T
*b	Transmission M/T

INSTALLATION

1. INSTALL INTAKE MANIFOLD
   (1) Install the 2 new gaskets to the intake manifold.
   (2) Install the intake manifold with the 6 bolts.
   Standard value:T=25N·m {255kgf·cm} {18.4ft·lbf}
   (3) Engage the 4 connectors and connect the wire harness.
   (4) Connect the fuel pump connector.
   (5) Engage the clamp and connect the engine wire harness.
   (6) Engage the three clips and connect the wiring harness. (Transmission A/T)
   (7) Connect the purge control solenoid valve connector.
   (8) Connect the manifold absolute pressure sensor connector.
2. CONNECT VENTILATION HOSE
   (1) Connect the ventilation hose.
3. CONNECT NO. 2 VACUUM HOSE (for Manual Transmission) (See page BR - 30)
4. Installation of compressor ASSY (with magnet clutch) (transmission M/T) (See page AC - 147)
5. Installation of V-belt (transmission M/T) (See page EM - 7)
6. INSTALL NO. 1 ENGINE COVER SUB-ASSEMBLY (TRANSMISSION A/T)
   (1) Engage the 3 claws and install the No. 1 engine cover sub-assembly.
7. CONNECT FUEL DELIVERY PIPE SUB-ASSEMBLY
   (1) Connect the No. 2 fuel vapor feed hose.
   (2) Install the bolt and connect the fuel delivery pipe sub-assembly.
   Standard value:T=6.4N·m {65kgf·cm} {4.7ft·lbf}
8. INSTALL INTAKE MANIFOLD PROTECTOR (for Bank 2) (See page FU - 28)
9. INSTALL INTAKE MANIFOLD PROTECTOR (for Bank 1) (See page FU - 28)
10. INSTALL INJECTOR DRIVER (See page FU - 44)
11. CONNECT PURGE HOSE (See page FU - 28)
12. CONNECT FUEL HOSE NO. 2 (See page FU - 28)
13. CONNECT FUEL HOSE NO. 1 (See page FU - 28)
14. CONNECT THROTTLE WITH MOTOR BODY ASSEMBLY
   (1) Install a new gasket to the intake manifold.

(2) Install the 4 bolts and throttle with motor body assembly to intake manifold.
Standard value:T=8.0N·m {82kgf·cm} {5.9ft·lbf}

15. INSTALL AIR CLEANER CAP WITH AIR CLEANER HOSE (See page EM - 114)
16. CONNECT CABLE TO NEGATIVE BATTERY TERMINAL
Standard value:T=6.0N·m {61kgf·cm} {4.4ft·lbf}
17. INSPECT FUEL PUMP OPERATION AND INSPECT FOR FUEL LEAK (See page FU - 10)
18. INSPECT THROTTLE WITH MOTOR BODY ASSEMBLY (See page ES - 668)

Chamber (FA20)

Exploded view

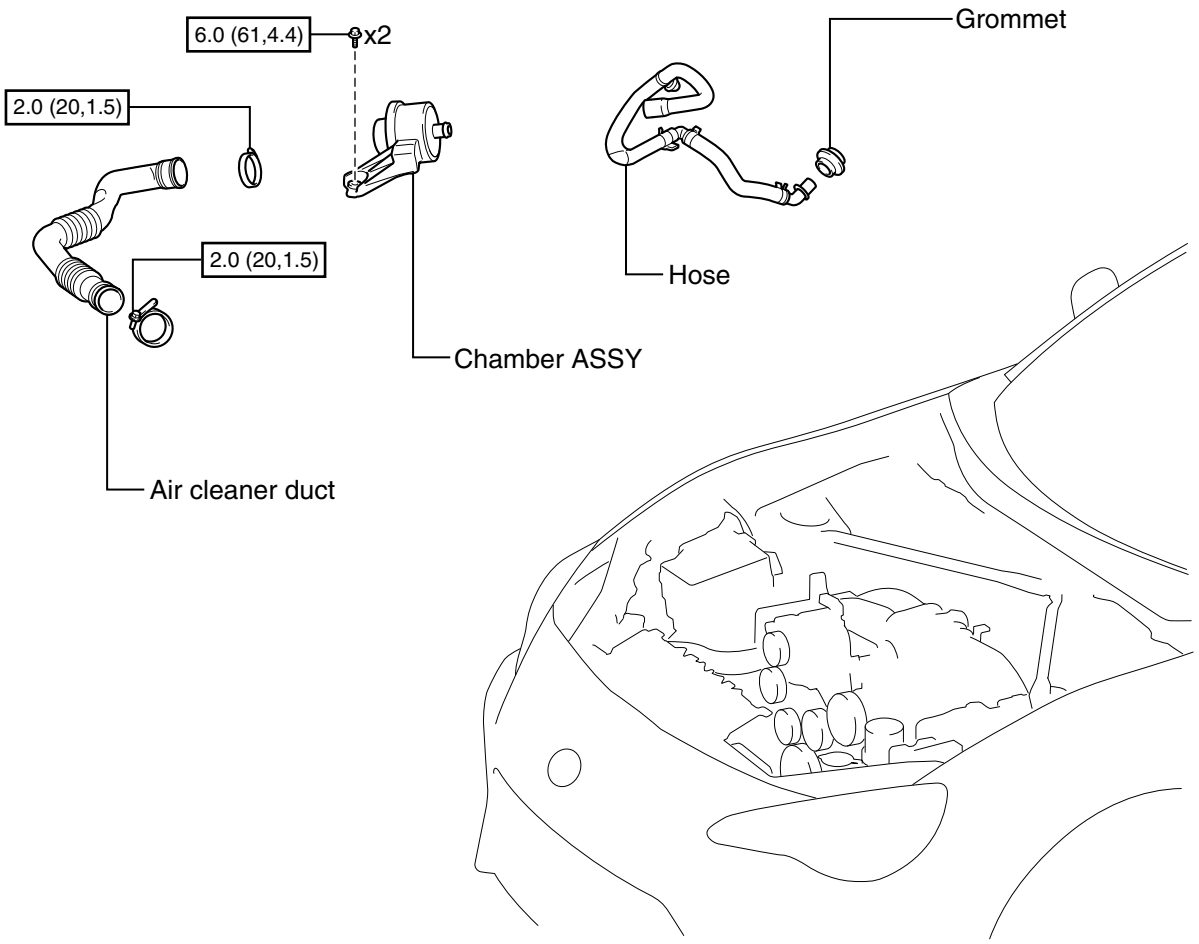

N•m {kgf•cm, ft•lbf} : Specified torque

IN-03279

IE

Removal

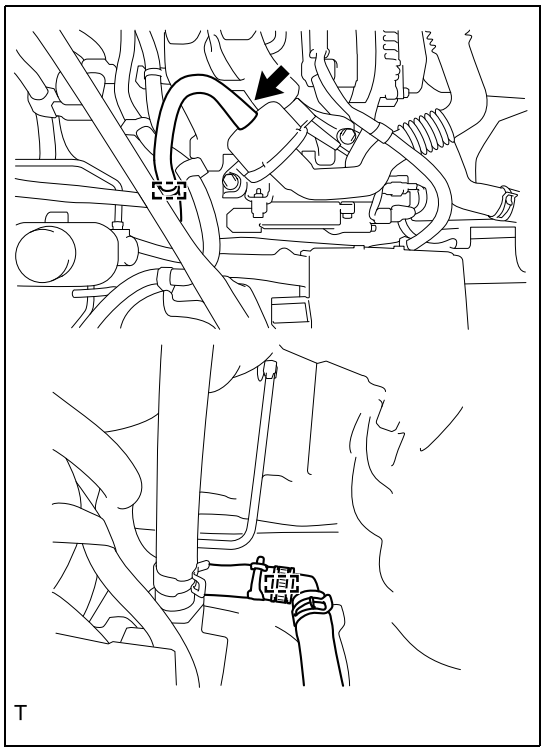

1. Hose removal
   (1) Disconnect the hose.
   (2) Release the two clamps and remove the hose from the grommet.

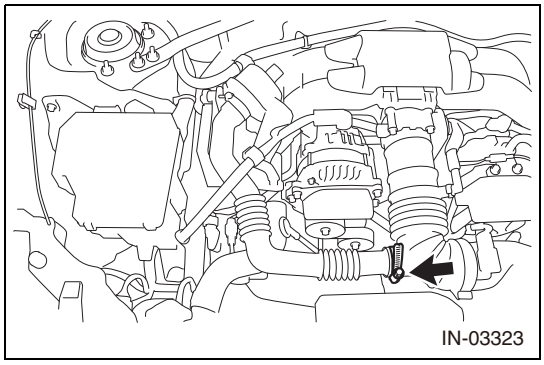

2. Duct removal
   (1) Loosen the hose clamp.

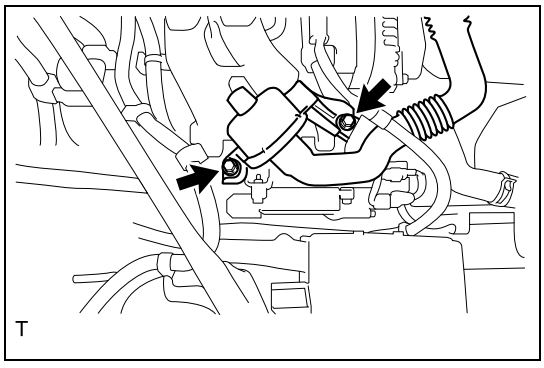

   (2) Remove the two bolts and remove the duct and chamber ASSY as a unit.

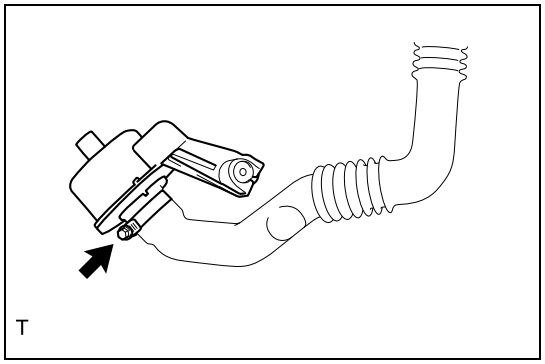
T

3. Chamber ASSY removal
   (1) Loosen the hose clamp and remove the chamber ASSY.

Installation

1. Chamber ASSY installation
   (1) Install the chamber ASSY with the hose clamp.
   Standard value:T=2.0N·m {20kgf·cm} {1.5ft·lbf}

IE

2. Duct installation
   (1) Install the duct and chamber ASSY as a unit with the two bolts.
   Standard value:T=6.0N·m {61kgf·cm} {4.4ft·lbf}
   (2) Install the duct with the hose clamp.
   Standard value:T=2.0N·m {20kgf·cm} {1.5ft·lbf}
3. Hose installation
   (1) Engage the two clamps and install the hose.

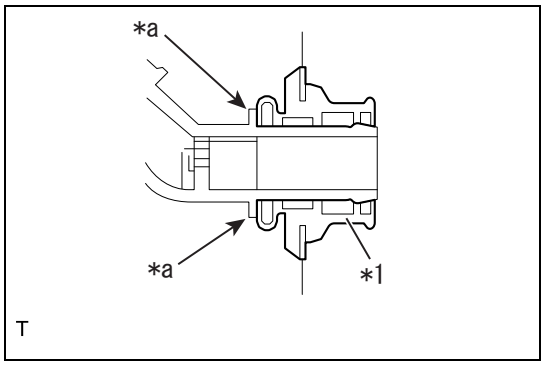

T

   (2) Insert the hose until the flange at the hose end contacts the grommet.

Captions in illustration

*1	Grommet
*a	Flange

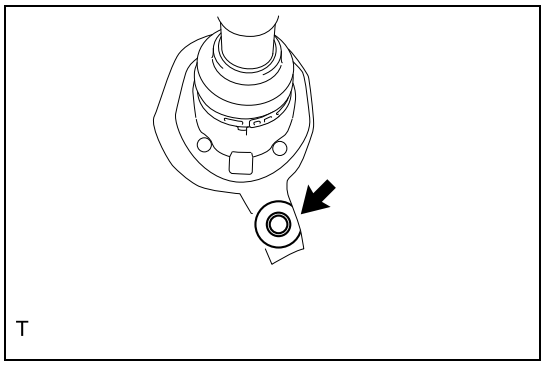
T

CAUTION:
When inserting the hose end, insert the hose so that the grommet rubber is not engulfed to avoid water leakage.

   (3) Make sure from the passenger room side that the hose end is inserted properly.
   (4) Connect the hose and install the hose.

Unit inspection

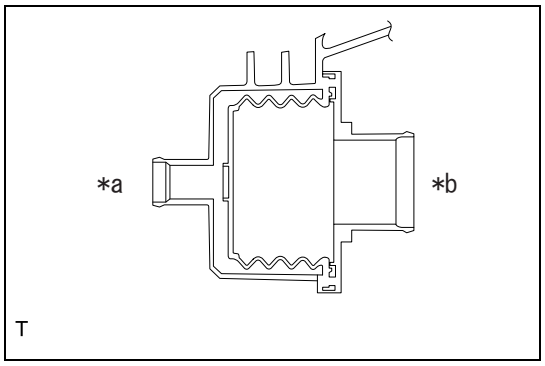

1. Chamber ASSY check
   (1) Check that air does not comes out easily from the IN side when air is blown into the chamber from the EX side.

Captions in illustration

*a	EX side
*b	IN side

Exhaust manifold (FA20)

Exploded view

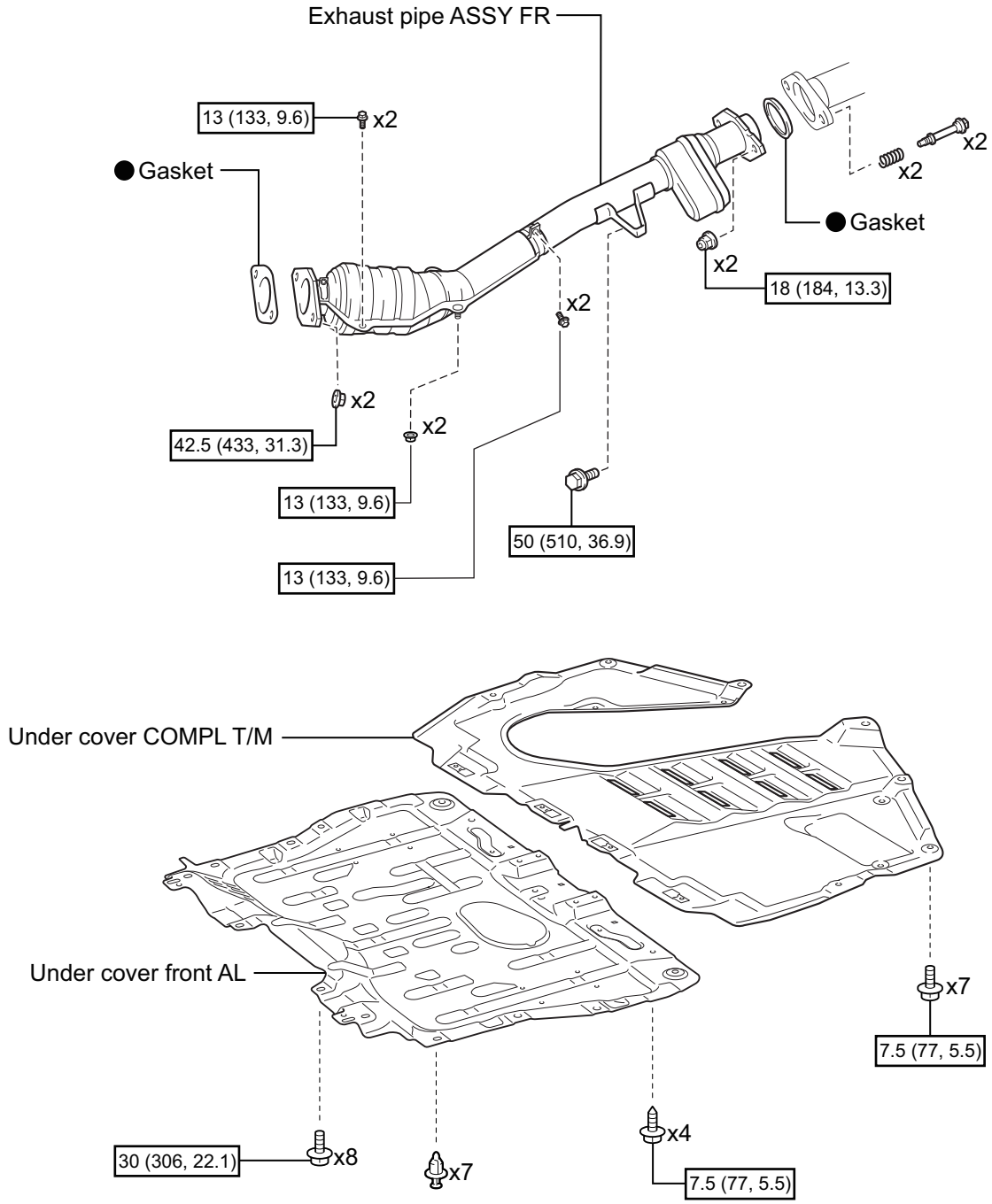

● Non-reusable part

N*m {kgf*cm, ft*lbf} : Tightening torque

EX-10038

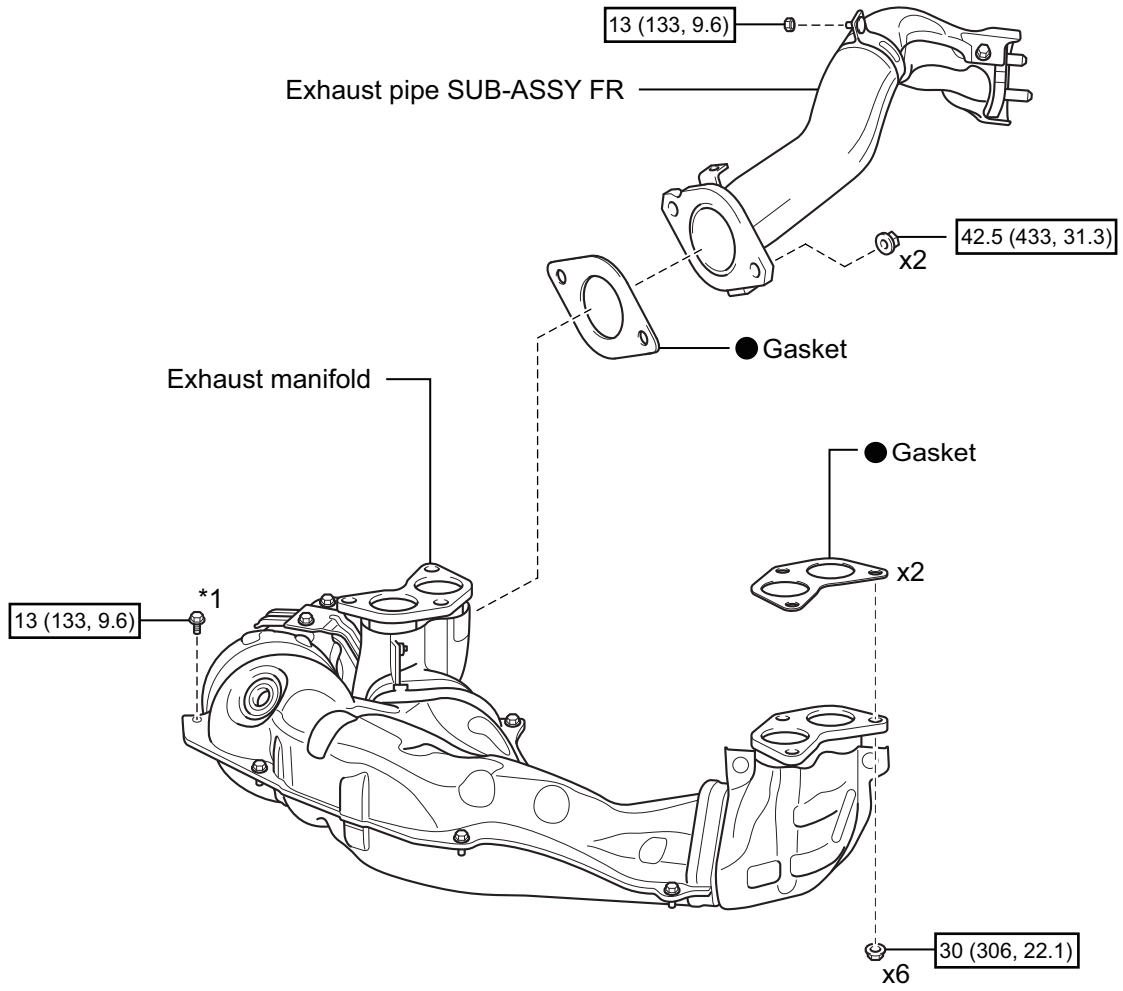

● Non-reusable part

N*m {kgf*cm, ft*lbf}: Tightening torque

*1: x15 (Transmission A/T)
x20 (Transmission M/T)

EX-10039

IE

Removal

1. Disconnection of the battery ground terminal (Refer to IN - 6)
2. Disconnect the connector for air / fuel ratio sensor and the 2 clamps. (Refer to ES - 707)
3. Disconnect the connector for oxygen sensor and the 2 clamps. (Refer to ES - 710)
4. Removal of exhaust pipe ASSY FR (Refer to IE - 40)

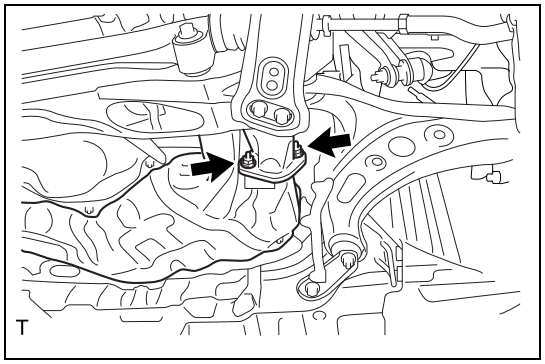

5. Exhaust manifold removal
   (1) Remove the two nuts and remove the exhaust pipe SUB-ASSY FR.
   (2) Remove the gasket.

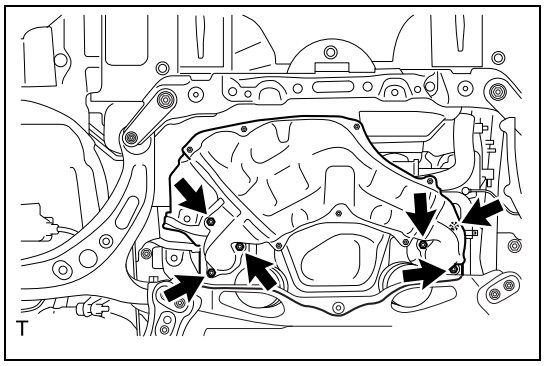

   (3) Remove the six nuts and remove the exhaust manifold.
   (4) Remove the two gaskets.

Installation

1. Exhaust manifold installation
   (1) Install two new gaskets.
   (2) Install the exhaust manifold with the six nuts.
   Standard value:T=30N·m {306kgf·cm} {22.1ft·lbf}
   (3) Install a new gasket to the exhaust pipe SUB-ASSY FR installation portion of exhaust manifold.
   (4) Install the exhaust pipe SUB-ASSY FR with the two nuts.
   Standard value:T=42.5N·m {433kgf·cm} {31.3ft·lbf}
2. Installation of exhaust pipe ASSY FR (Refer to IE - 46)
3. Install the connector for oxygen sensor connector and the two clamps. (Refer to ES - 712)
4. Install the connector for air/fuel ratio sensor and the 2 clamps. (Refer to ES - 708)
5. Connection of the battery ground terminal
   Standard value:T=6.0N·m {61kgf·cm} {4.4ft·lbf}
6. Exhaust gas leakage check
   (1) Make sure that there is no exhaust gas leakage from the connections of exhaust pipes and the mounting portion of each sensor.

Exhaust pipe ASSY (FA20)

Exploded view

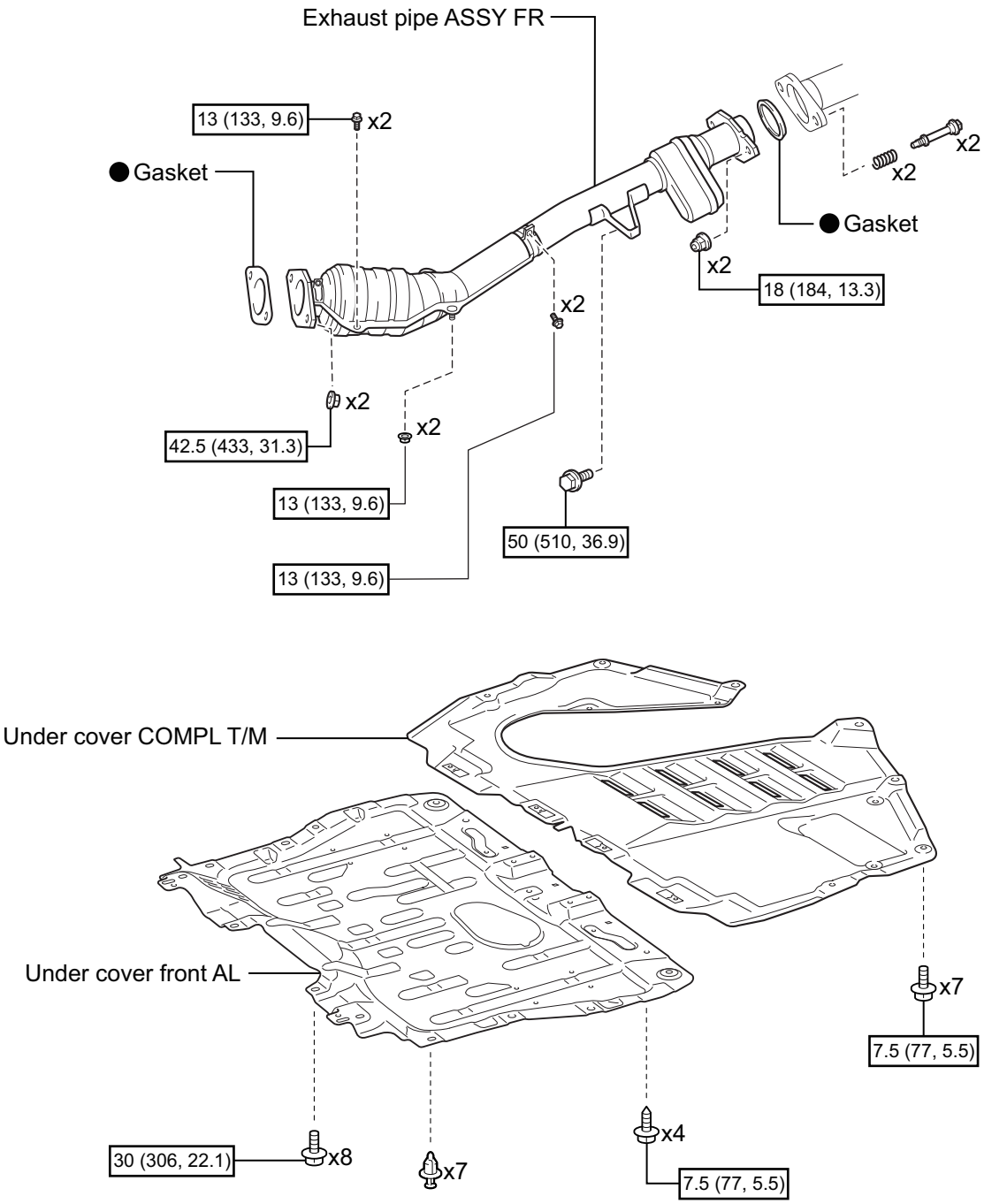

● Non-reusable part

N*m {kgf*cm, ft*lbf} : Tightening torque

EX-10038

IE

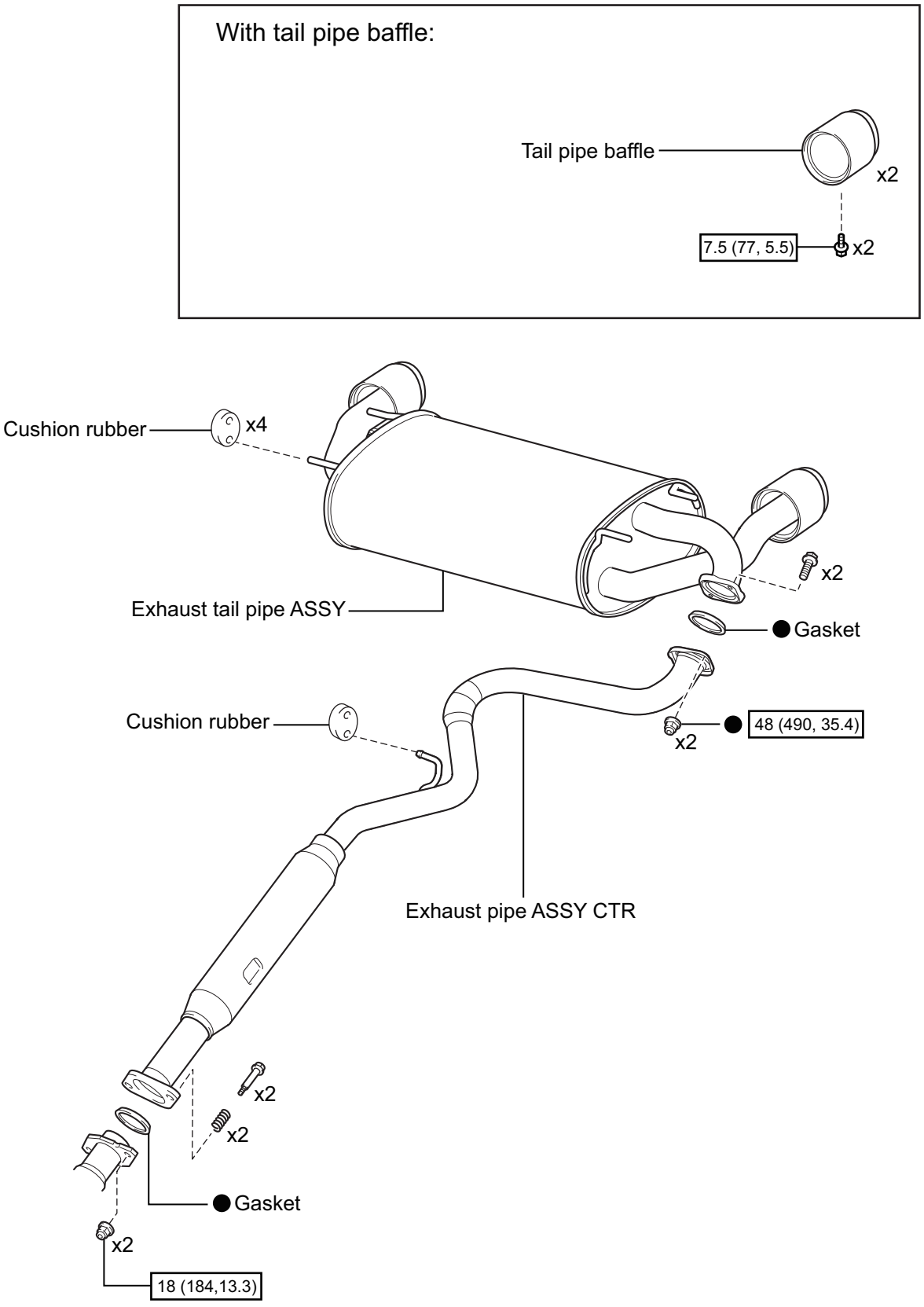

● Non-reusable part

N*m {kgf*cm, ft*lbf} : Specified torque

EX-10047

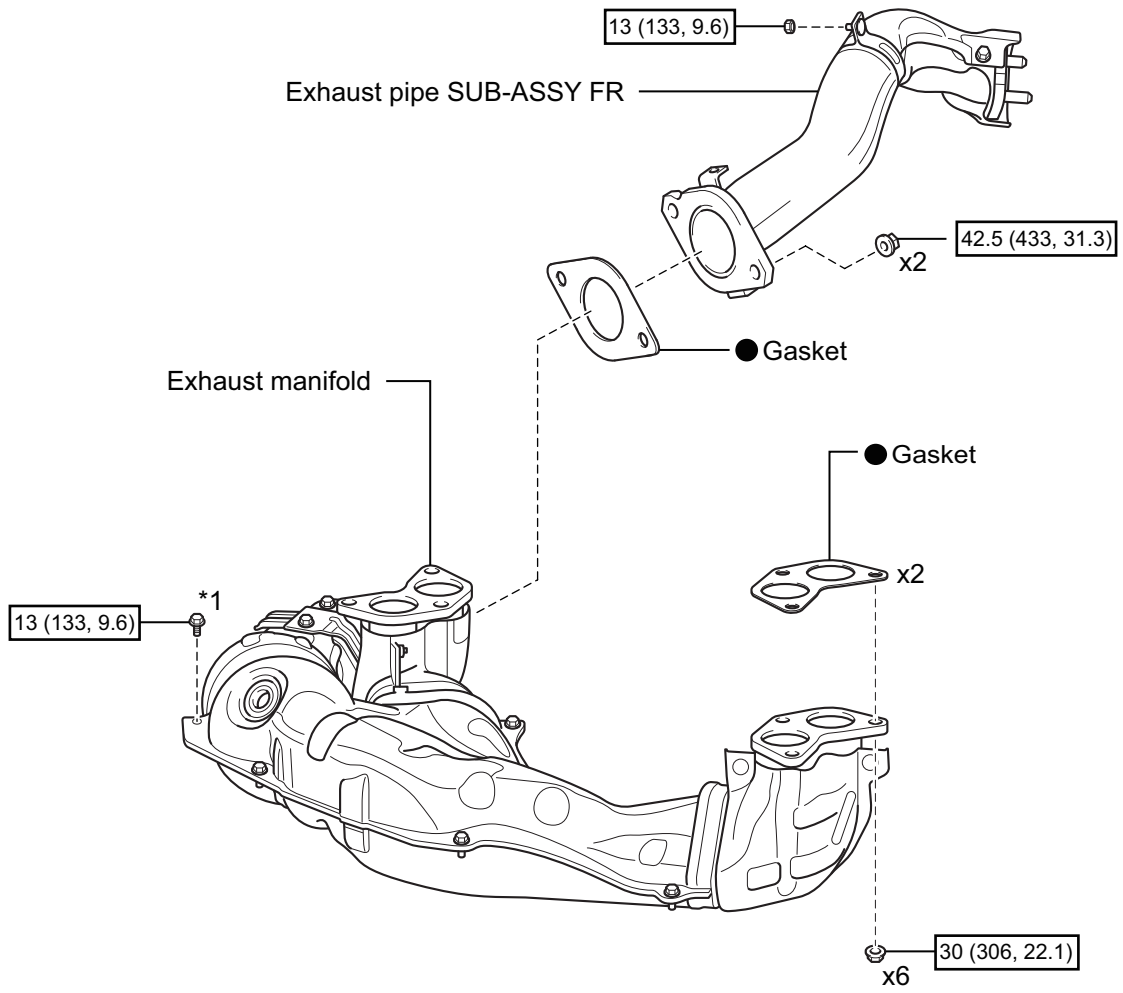

● Non-reusable part

N*m {kgf*cm, ft*lbf}: Tightening torque

*1: x15 (Transmission A/T)
x20 (Transmission M/T)

EX-10039

Removal

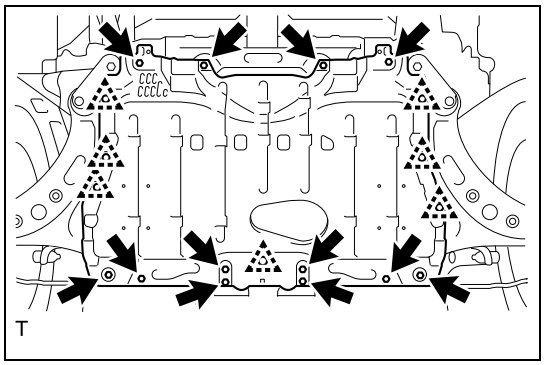

1. Under cover front AL removal
   (1) Remove the 12 bolts, release the seven clips, and then remove the under cover front AL.

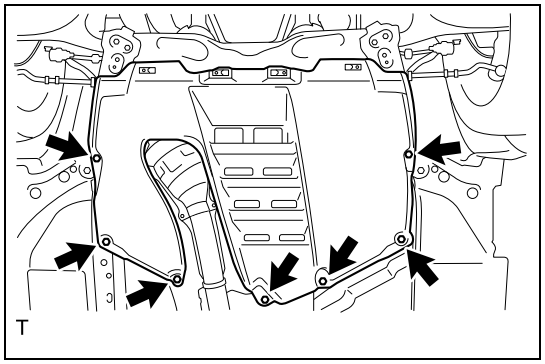

2. Under cover COMPL T/M removal
   (1) Remove the seven bolts to remove the under cover COMPL T/M.

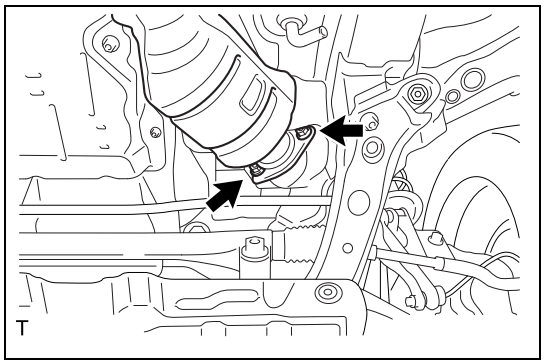

3. Removal of exhaust pipe ASSY FR
   (1) Remove the two nuts and remove the exhaust pipe ASSY FR.

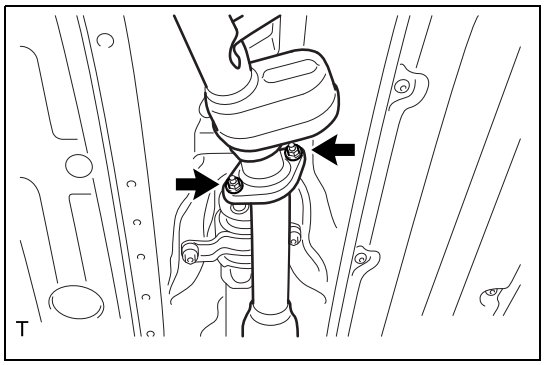

   (2) Remove the two nuts, two bolts and two compression springs to remove the exhaust pipe ASSY CTR.

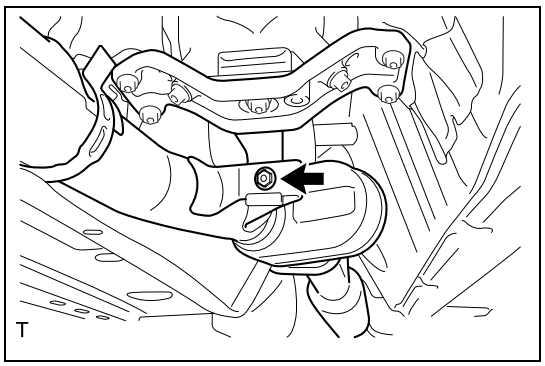

   (3) Remove the bolt and remove the exhaust pipe ASSY FR.
   (4) Remove the two gaskets.

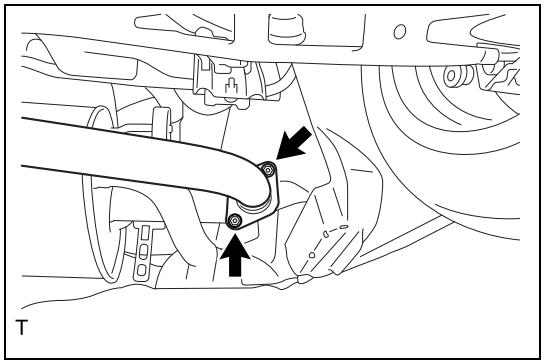

4. Removal of exhaust pipe ASSY CTR
   (1) Remove the two nuts and two bolts to remove the exhaust tail pipe ASSY.

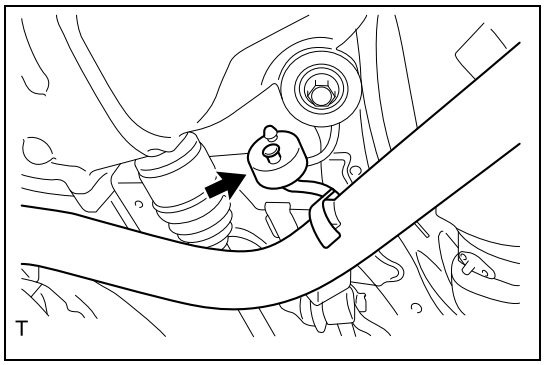

   (2) Remove the cushion rubber, and remove the exhaust pipe ASSY CTR.
   (3) Remove the gasket.

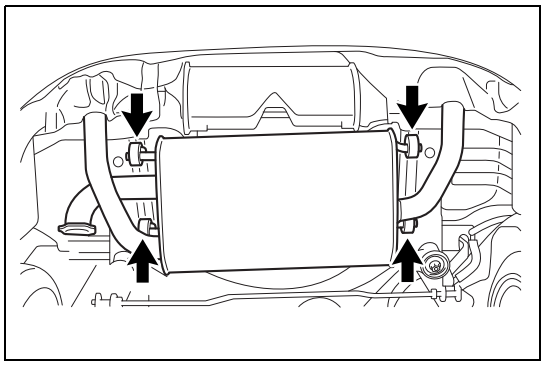

5. Exhaust tail pipe ASSY removal
   (1) Remove the four cushion rubbers and remove the exhaust tail pipe ASSY.

6. Tail pipe baffle removal (with tail pipe baffle)
   (1) Remove the two bolts and remove the two tail pipe baffles.
7. Exhaust manifold removal (Refer to IE - 36)
8. Removal of exhaust pipe SUB-ASSY FR
   (1) Front strut tower bar LH removal (Refer to FP - 5)
   (2) Removal of flexible V-shaped bar LH (tS model) (Refer to FP - 5)
   (3) Front strut tower bar RH removal (Refer to FP - 4)
   (4) Removal of flexible V-shaped bar RH (tS model) (Refer to FP - 5)
   (5) Removal of air cleaner case SUB-ASSY (Refer to EM - 75)

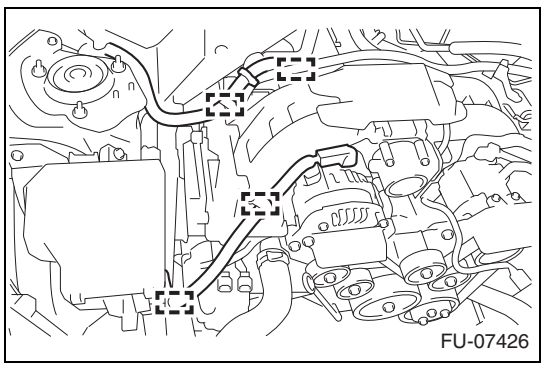

   (6) Engine wiring disconnection
      (a)Release the four clamps and disconnect the engine wiring.

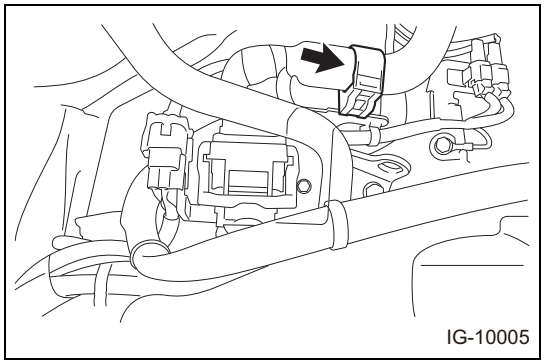

(b) Release the clamp and disconnect the bulkhead harness.

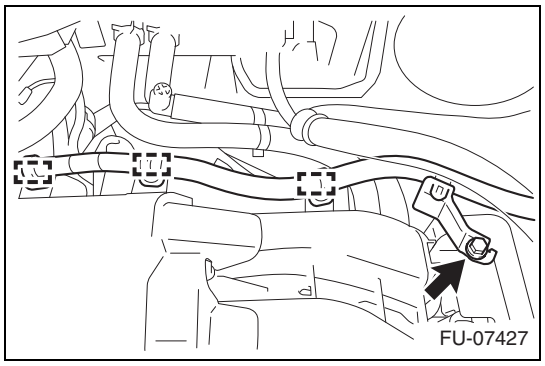

(c) Remove the bolt and three clamps, and then disconnect the engine wiring. (Transmission A/T)

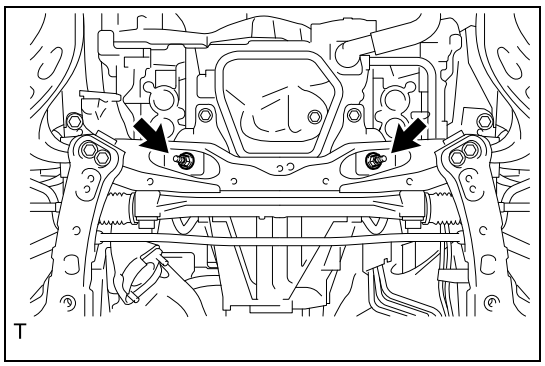

(7) Remove the 2 nuts on the engine mount.

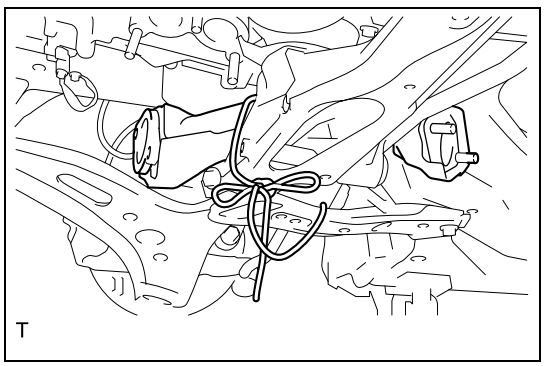

(8) Tie the joint pipe to the front suspension crossmember SUB-ASSY with rope.
NOTE:
This procedure is necessary to prevent the joint pipe from falling off.

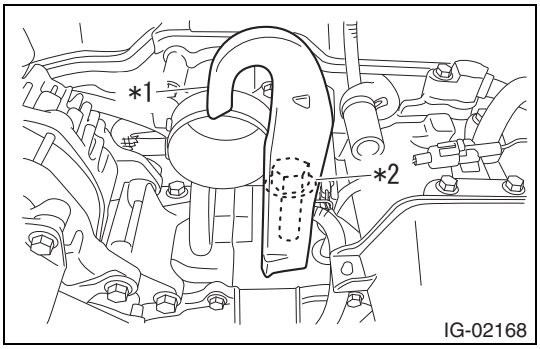

(9) Install the SST to the cylinder block.

Captions in illustration

*1	12281-38150
*2	90119-14120

SST 12281-38150, 90119-14120

Standard value: T=43N·m {439kgf·cm} {31.7ft·lbf}

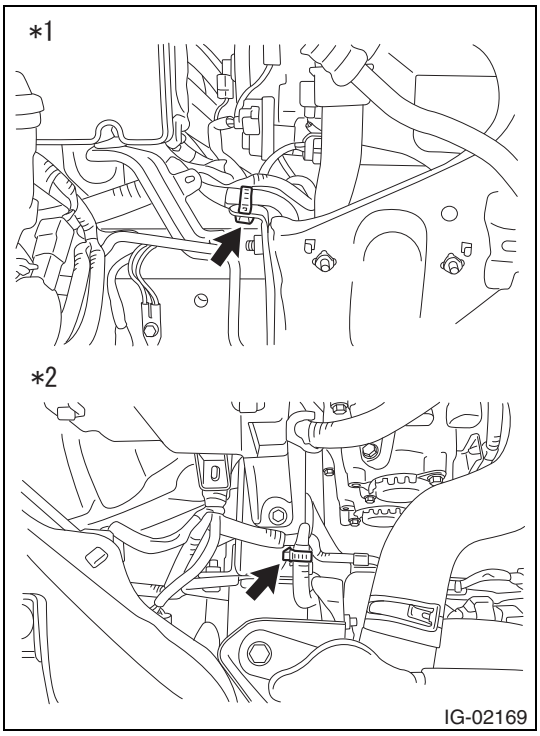

(10) Release the clamp and disconnect the engine wiring.

Captions in illustration

*1	LH
*2	RH

NOTE:

This procedure is required to prevent the engine wiring from damaging.

IE

(11) Install the SST to the vehicle.

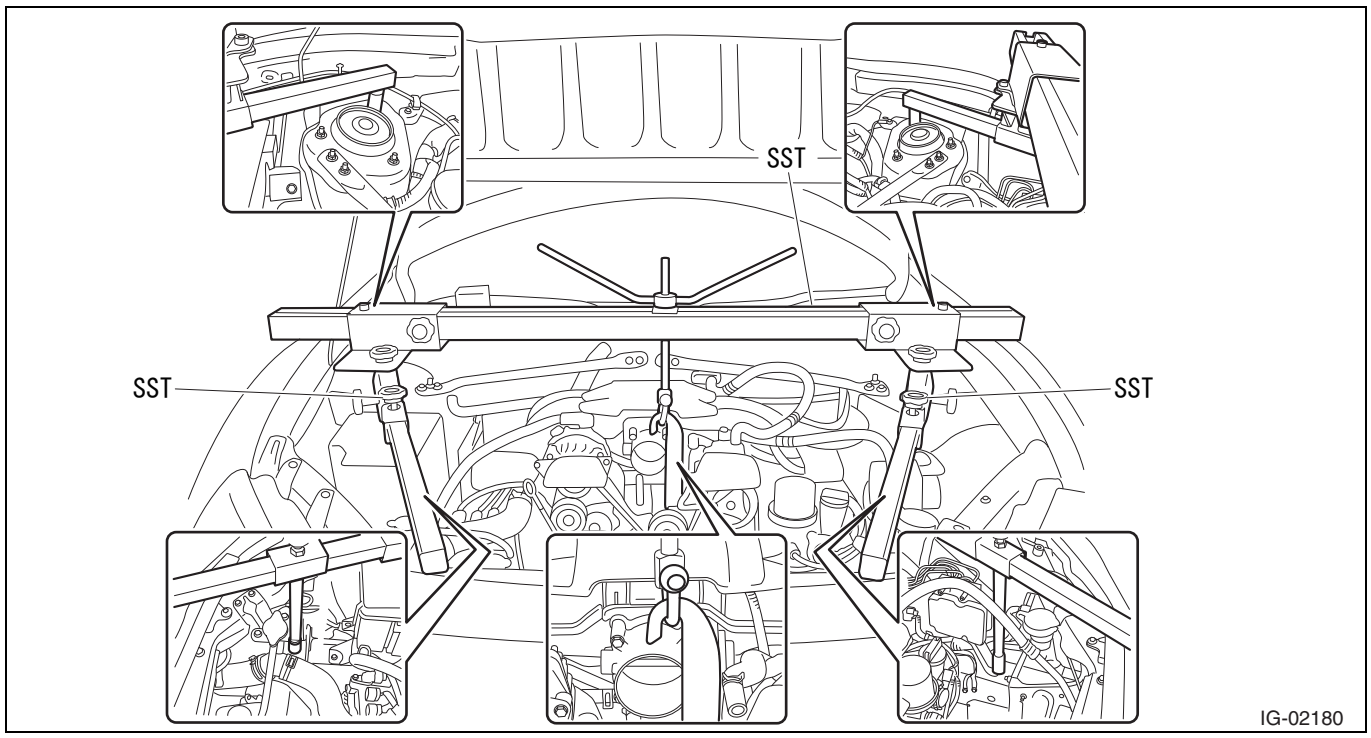

SST 99099AJ000, 18679AA020

CAUTION:

- When installing the SST to the vehicle, do not damage the engine wiring.
- Use a shackle with a load capacity of 250 kg (551 lb) or more.

(12) Lift the engine ASSY a little bit at a time until the stud bolt of the engine mount is removed from the front crossmember.

CAUTION:

- To avoid the damage to the SST, apply grease or lubricant to the threaded portion.
- To avoid the damage to the vehicle and parts, perform lifting operation a little bit at a time while checking the clearance in each part.
- Lift up the engine ASSY until the position where the intake manifold (#4) and A/C suction hose contact lightly.
- Insert a cloth etc. between the intake manifold (#4) and A/C suction hose to protect the parts of them.

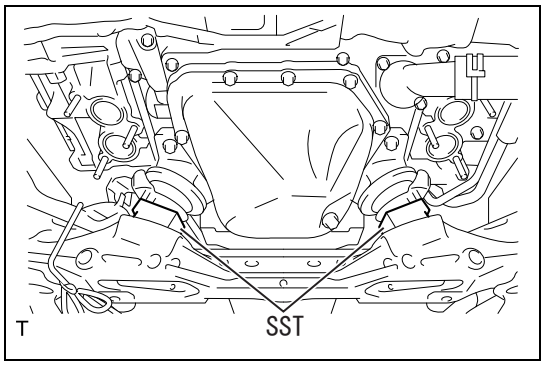

(13) Install the SST between engine mount and front crossmember.
SST 18632AA020

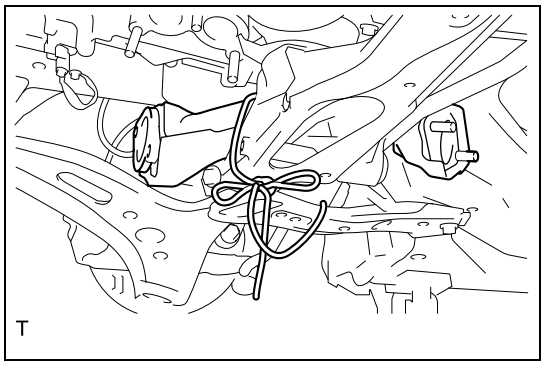

(14) Remove the rope which secures the exhaust pipe SUB-ASSY FR to the front suspension crossmember SUB-ASSY.

(15) Remove the exhaust pipe SUB-ASSY FR.

Installation

1. Exhaust pipe SUB-ASSY FR installation
   (1) Tie the exhaust pipe SUB-ASSY FR to the front suspension crossmember SUB-ASSY with the rope.
   NOTE:
   This operation is required to avoid dropping the exhaust pipe SUB-ASSY FR.
2. Removal of SST
   (1) Using the SST, lift the engine ASSY.
   SST 99099AJ000, 18679AA020

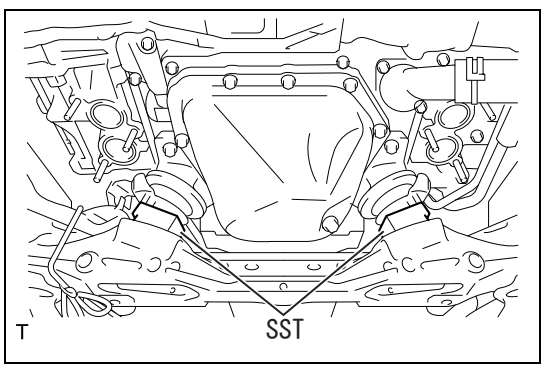

(2) Remove the SST.
SST 18632AA020

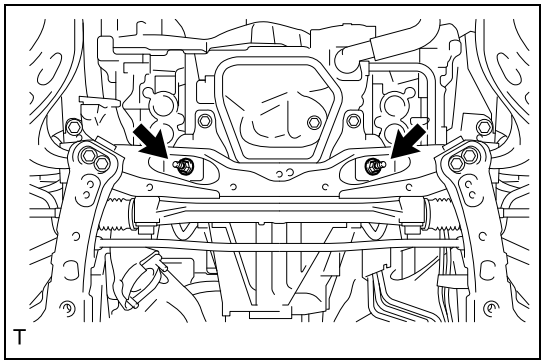

(3) Install the two nuts of the new engine mounting.
Standard value:T=60N·m {612kgf·cm} {44.2ft·lbf}

(4) Remove the rope which secures the joint pipe to the front suspension crossmember SUB-ASSY.
(5) Remove the SST from the vehicle.
(6) Remove the SST from the cylinder block.

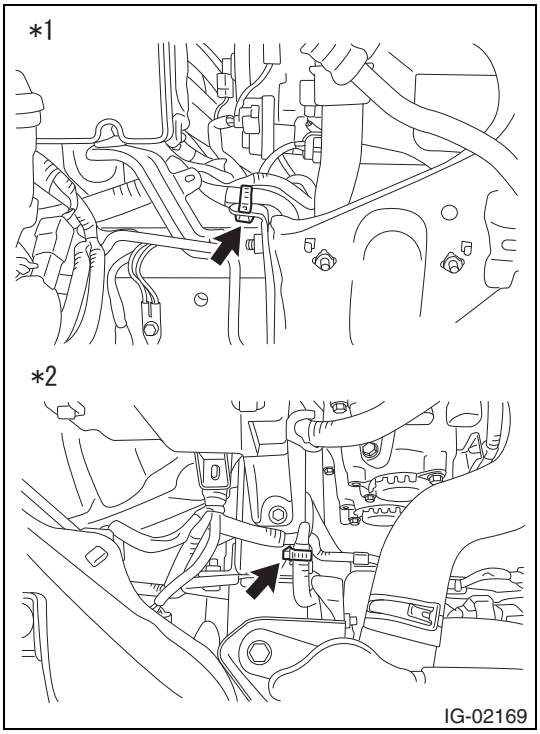

(7) Connect the engine wiring with the clamp.

Captions in illustration

*1	LH
*2	RH

(8) Engine wiring connection
(a) Connect the engine wiring with the bolt and three clamps. (Transmission A/T)
Standard value:T=1.1N·m {112kgf·cm} {8.1ft·lbf}
(b) Using the clamp, connect the bulkhead harness.
(c) Using 4 clamps, connect the engine wire.
(9) Installation of air cleaner case SUB-ASSY (Refer to EM - 114)
(10) Front strut tower bar LH installation (Refer to FP - 5)
(11) Installation of flexible V-shaped bar LH (tS model) (Refer to FP - 5)
(12) Front strut tower bar RH installation (Refer to FP - 5)
(13) Installation of flexible V-shaped bar RH (tS model) (Refer to FP - 5)

3. Exhaust manifold installation (Refer to IE - 36)

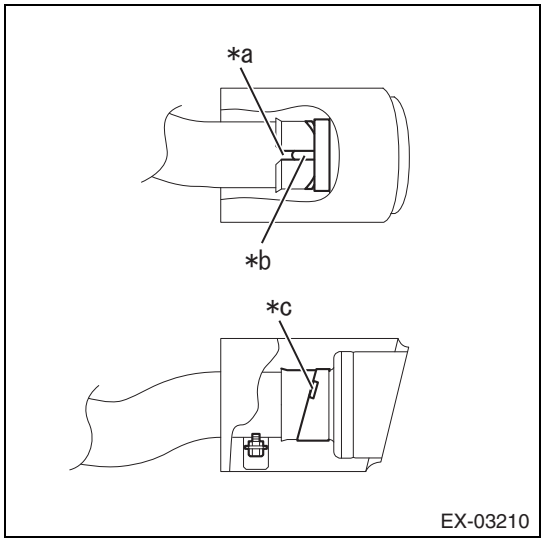

4. Tail pipe baffle installation (with tail pipe baffle)
   (1) As shown in the figure, align the notch of the tail pipe baffle and the protrusion of the exhaust tailpipe ASSY, and push in until it hits the tailpipe baffle stopper.

Captions in illustration

*a	Cutout
*b	Protrusion portion
*c	Stopper

   (2) Install the two tail pipe baffles with the two bolts.
   Standard value:T=7.5N·m {77kgf·cm} {5.5ft·lbf}

IE

5. Exhaust tail pipe ASSY installation
   (1) Install the exhaust tail pipe ASSY with the four cushion rubbers.
6. Installation of exhaust pipe ASSY CTR
   (1) Install the exhaust pipe ASSY CTR with the cushion rubber.
   (2) Install the exhaust pipe ASSY CTR to the exhaust tail pipe ASSY via a new gasket with the two bolts and two new nuts.
   Standard value:T=48N·m {490kgf·cm} {35.4ft·lbf}
7. Installation of exhaust pipe ASSY FR
   (1) Temporarily tighten the exhaust pipe ASSY FR to the bracket with the bolt.
   (2) Install the exhaust pipe ASSY FR to the exhaust pipe ASSY CTR via a new gasket with the two nuts, two bolts and two compression rings.
   Standard value:T=18N·m {184kgf·cm} {13.3ft·lbf}
   (3) Install the exhaust pipe ASSY FR to the exhaust pipe SUB-ASSY FR via a new gasket with the two nuts.
   Standard value:T=42.5N·m {433kgf·cm} {31.3ft·lbf}
   (4) Finally tighten the bolt for securing the bracket of exhaust pipe ASSY FR.
   Standard value:T=50N·m {510kgf·cm} {36.9ft·lbf}
8. Exhaust gas leakage check
   (1) Make sure that there is no exhaust gas leakage from the connections of exhaust pipes and the mounting portion of each sensor.
9. Shift lever position check (transmission A/T) (Refer to AT - 210)
10. Under cover COMPL T/M installation
   (1) Install the under cover COMPL T/M with the seven bolts.
   Standard value:T=7.5N·m {77kgf·cm} {5.5ft·lbf}

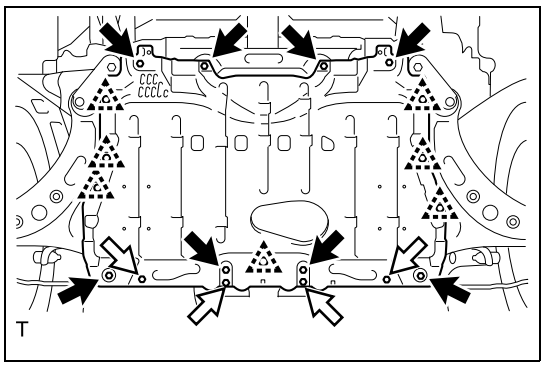

11. Under cover front AL installation
   (1) Install the under cover front AL with the 12 bolts and seven clips.

Captions in illustration

➡	Bolt A
⇨	Bolt B

Standard value:Bolt A
T=30N·m {306kgf·cm} {22.1ft·lbf}
Standard value:Bolt B
T=7.5N·m {77kgf·cm} {5.5ft·lbf}

Cooling

Cooling system (FA20)
On-vehicle inspection CO-2

Cooling fan system (FA20)
Parts location CO-3
On-vehicle inspection CO-4
Symptom table CO-5
Circuit figure CO-6
Cooling fan system CO-7

Coolant (FA20)
Replacement CO-16
Adjustment CO-17

Water pump (FA20)
Exploded view CO-18
Removal CO-19
Installation CO-20
On-vehicle inspection CO-20

Radiator ASSY (FA20)
Exploded view CO-21
Removal CO-24
Installation CO-30
On-vehicle inspection CO-32

Thermostat (FA20 / transmission AT)
Exploded view CO-33
Removal CO-33
Inspection CO-34
Installation CO-35

Thermostat (FA20 / for engine coolant)
Exploded view CO-36
Removal CO-36
Inspection CO-37
Installation CO-38

Cooling fan motor (FA20)
Exploded view CO-39
Removal CO-41
Installation CO-44
On-vehicle inspection CO-45

Relay (FA20)
Unit inspection CO-46

Cooling system (FA20)

On-vehicle inspection

WARNING:
To avoid the risk of burn, do not remove the radiator cap when the engine and radiator are hot. The fluid and steam may blow out due to the pressure.

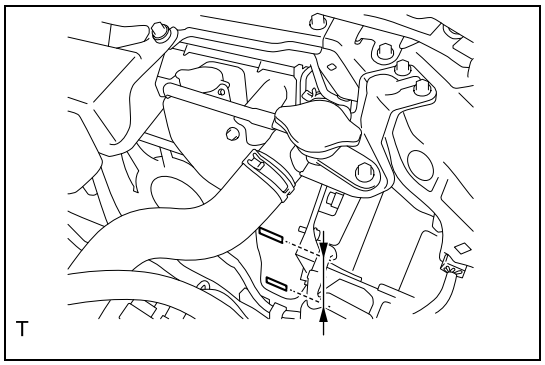

1. Coolant (SUBARU Super Coolant) level check
   (1) When the engine is cold, make sure that the reservoir tank level is between the FULL line and LOW line.
   NOTE:
   If the fluid level is low, check for coolant leakage and refill the coolant to the FULL line.
   CAUTION:
   Do not use water instead of the coolant.
   (2) Remove the radiator cap and make sure that the coolant is filled up to the radiator filler neck.

2. Coolant (SUBARU Super Coolant) check
   (1) Remove the radiator cap.
   WARNING:
   To avoid the risk of burn, do not remove the radiator cap when the engine and radiator are hot. The fluid and steam may blow out due to the pressure.
   (2) Check that there is no excessive rust or scale deposition around the radiator cap and water inlet.
   NOTE:
   If it is excessively dirty, replace the coolant. (Refer to CO - 16)
   (3) Install the radiator cap.

3. Coolant (SUBARU Super Coolant) leakage check
   WARNING:
   To avoid the risk of burn, do not remove the radiator cap when the engine and radiator are hot. The fluid and steam may blow out due to the pressure.

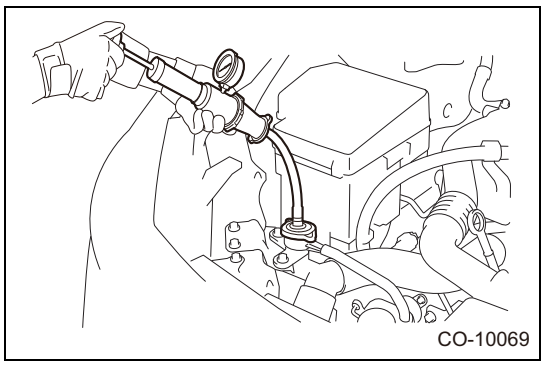

   (1) Attach the radiator cap tester to the radiator.
   NOTE:
   If the engine coolant level is low, refill the coolant of the specified concentration from the radiator filler neck.
   (2) Warm up the engine.
   (3) Perform the pumping operation up to a pressure of 137 kPa {1.4 kgf/cm^2, 20 psi} and make sure that the pressure does not decrease.
   NOTE:
   If the pressure decreases, check the hoses, radiator and water pump for leakage. If there is no leakage to the outside, check the heater core, cylinder block and cylinder head.

Cooling fan system (FA20)

Parts location

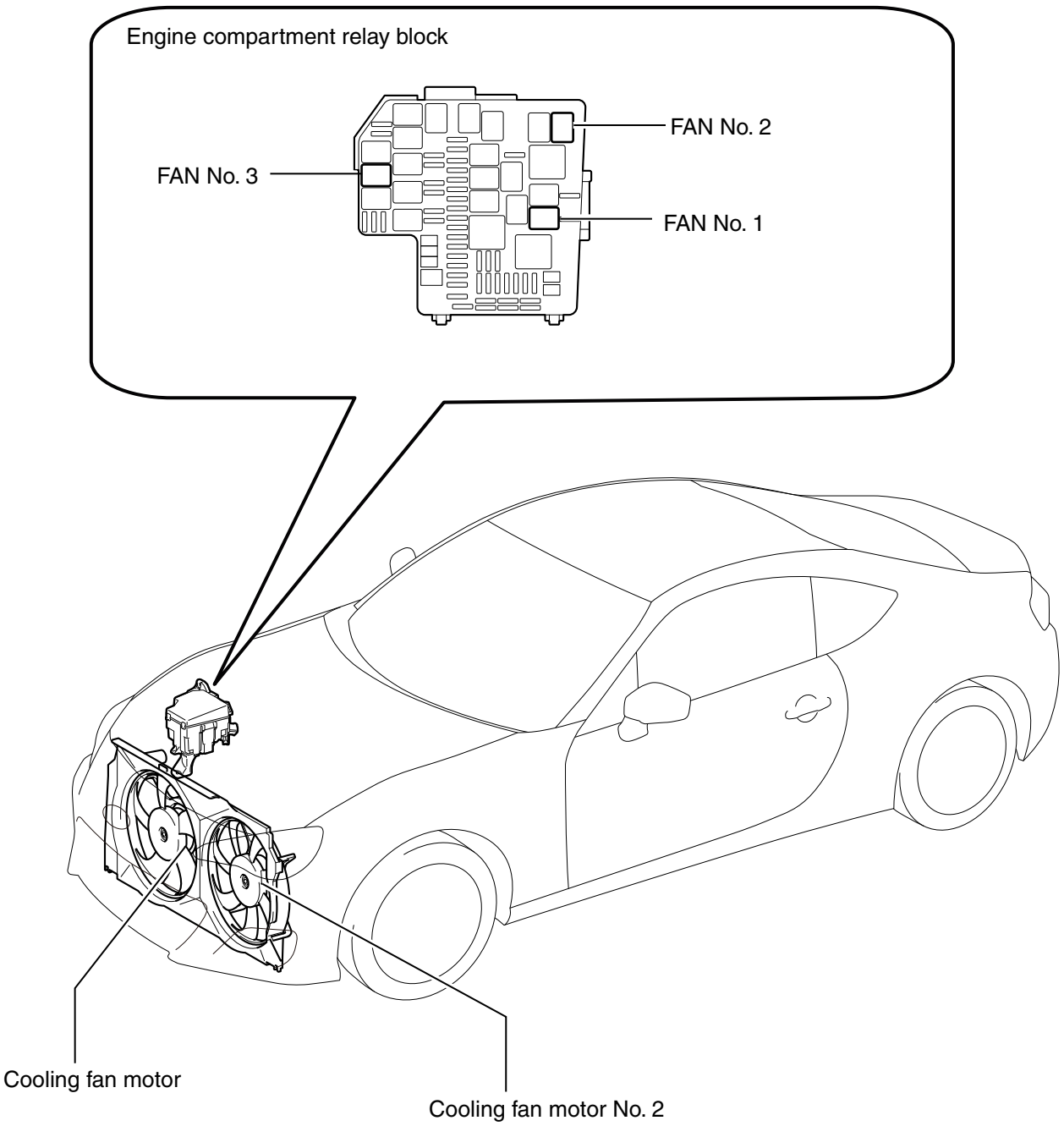

CO-03016

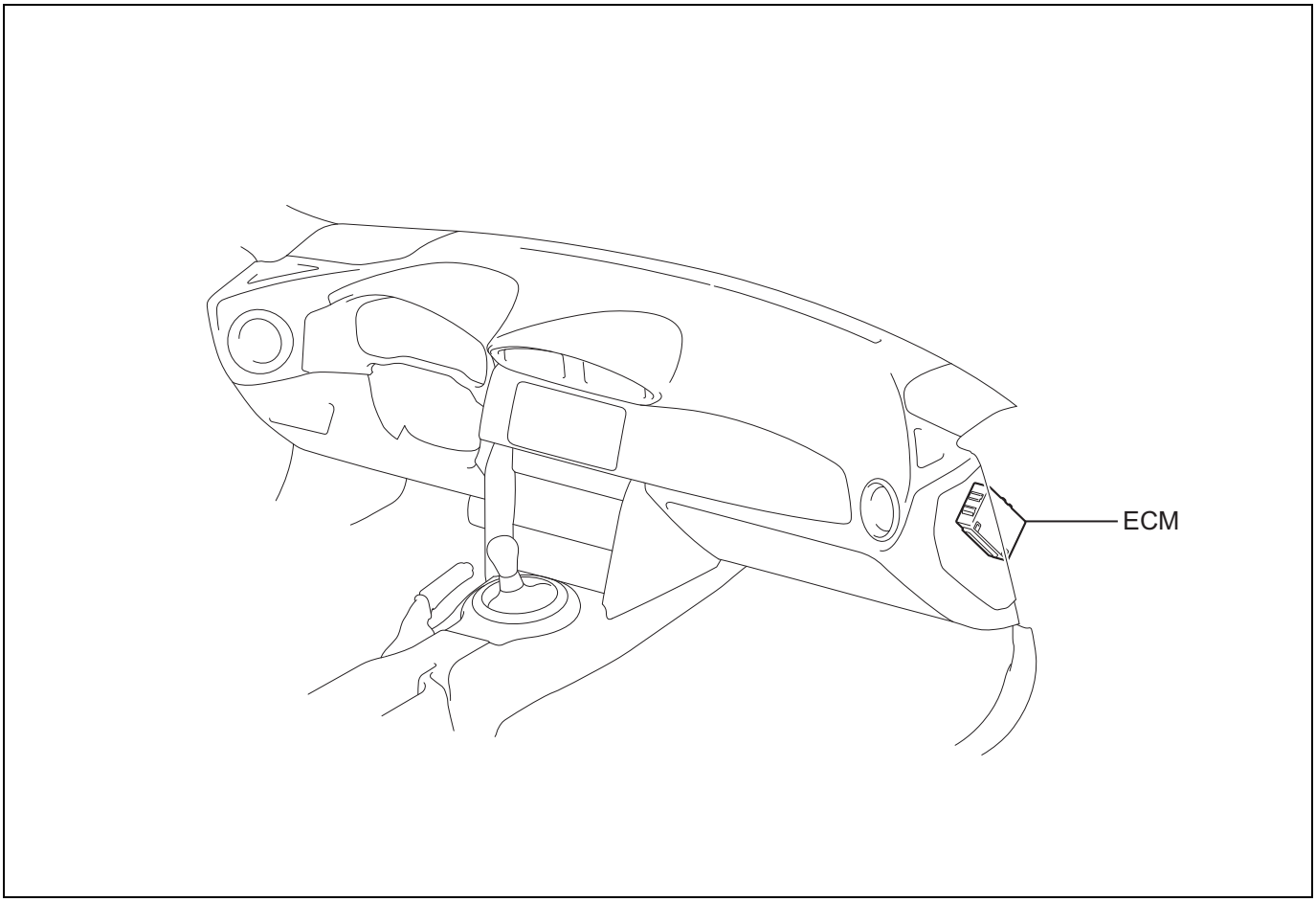

CO

On-vehicle inspection

1. INSPECT COOLING FAN OPERATION AT LOW TEMPERATURES (Below 92 °C (198 °F))
   (1) Turn the ignition switch to ON.
   (2) Check that the cooling fans stop.
   If it does not, check the cooling fan relays and engine coolant temperature sensor, and check whether there is a disconnection or an open circuit between them.
   (3) Disconnect the engine coolant temperature sensor connector.
   (4) Check that the cooling fans operate.
   If it does not, check the fuses, cooling fan relays, ECM and cooling fans, and check for a short circuit between the cooling fan relays and the engine coolant temperature sensor.
   (5) Reconnect the engine coolant temperature sensor connector.
2. INSPECT COOLING FAN OPERATION AT HIGH TEMPERATURES (Above 95 °C (203 °F))
   (1) Start the engine, and raise the engine coolant temperature to above 95 °C (203 °F).
   NOTE:
   The engine coolant temperature is detected by the engine coolant temperature sensor on the water outlet.
   (2) Check that the cooling fans operate.
   If it does not, replace the engine coolant temperature sensor.

Symptom table

Cooling fan system

Symptoms	Inspection items	Reference pages
Cooling fan does not rotate.	Engine water temperature sensor	ES - 696
	Cooling fan motor	CO - 45
	Cooling fan motor No. 2	CO - 45
	Cooling fan relay (FAN NO. 1)	CO - 46
	Cooling fan relay (FAN NO. 3)	CO - 46
	Cooling fan system	CO - 7
	Engine control computer	ES - 670
Cooling fan cannot be stopped.	Engine water temperature sensor	ES - 696
	Cooling fan system	CO - 7
	Cooling fan relay (FAN NO. 1)	CO - 46
	Cooling fan relay (FAN NO. 3)	CO - 46
	Engine control computer	ES - 670
Cooling fan speed does not vary.	Cooling fan relay (FAN NO. 2)	CO - 46
	Cooling fan system	CO - 7
	Engine control computer	ES - 670

Circuit figure

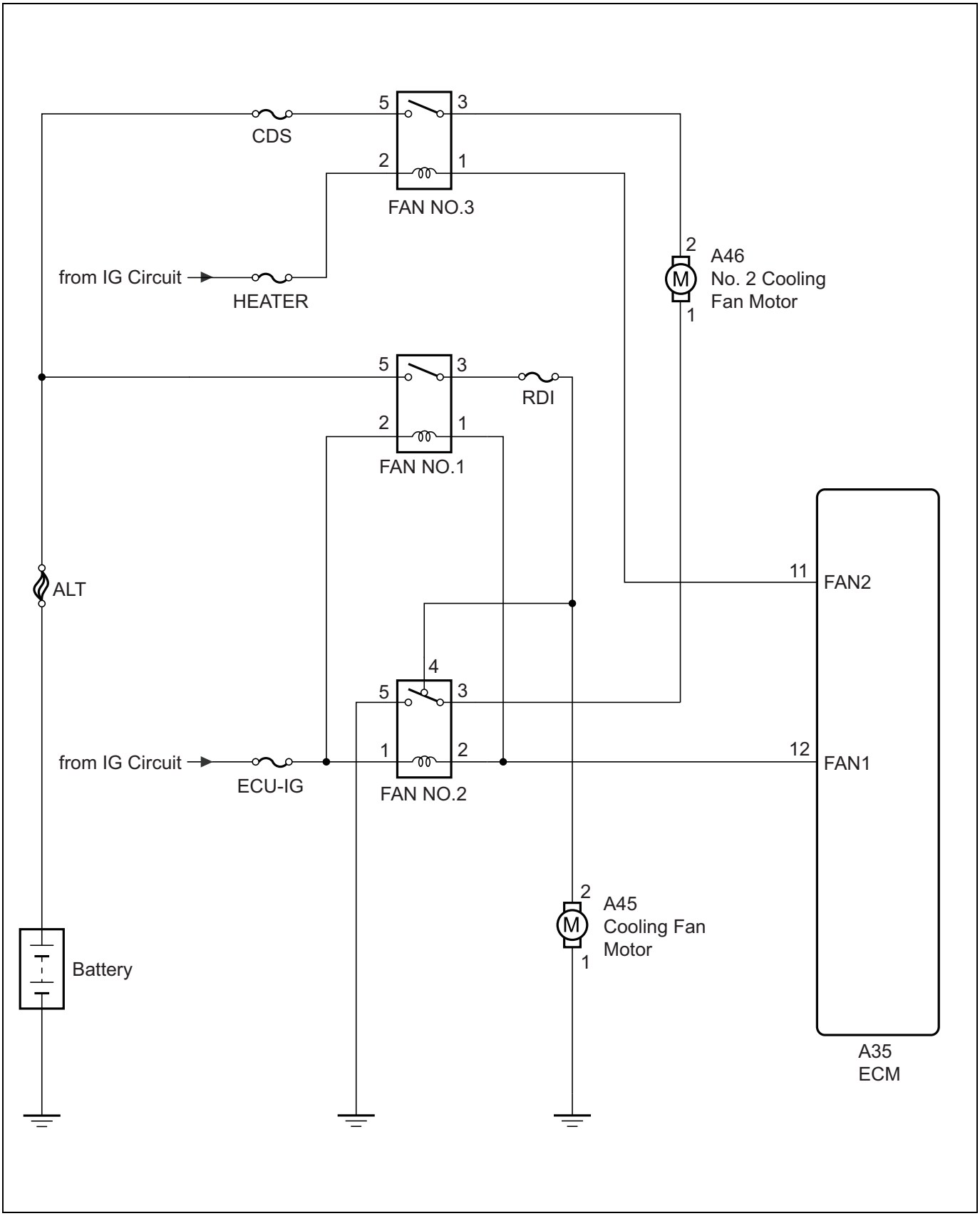

Cooling fan system

Circuit description

For the cooling fan, the engine control computer turns ON/OFF the cooling fan relay using the engine coolant temperature, A/C switch, A/C refrigerant pressure, engine speed and vehicle speed signals.

To control the cooling fan motor speed in two stages, the engine control computer turns ON/OFF the fan relay to switch between the series and parallel connections of cooling fan motor circuit.

Circuit figure

For a circuit figure, refer to CO - 6.

Inspection steps

NOTE:

Read the freeze frame data using the SSM4. In the freeze frame data, part of the engine running condition at a trouble occurrence is stored and these information is helpful for troubleshooting.

CAUTION:

Check fuses in this circuit before performing the troubleshooting.

1	FAN NO. 1 relay check (power supply voltage)

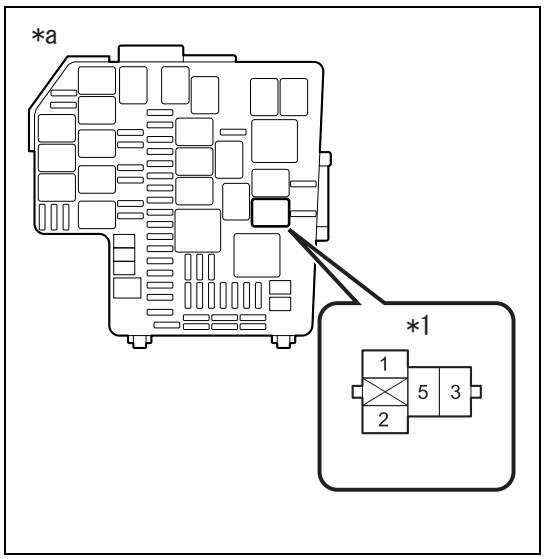

(1) Remove the FAN NO. 1 relay from the engine compartment relay block.

(2) Measure the voltage between the terminals.

CAUTION:

When measuring the voltage by putting the tester probe etc. on the holder, the holder may be damaged if the probe is pressed against the holder too strong.

Voltage

Inspection terminals	Inspection conditions	Standard value
5 (FAN NO. 1) - chassis ground	Always	11 to 14V

Captions in illustration

*1	FAN NO. 1 relay
*a	Relay not connected (Engine compartment relay block)

NG → Repair or replacement of wiring harness or connector

OK

2	FAN NO. 3 relay check (power supply voltage)

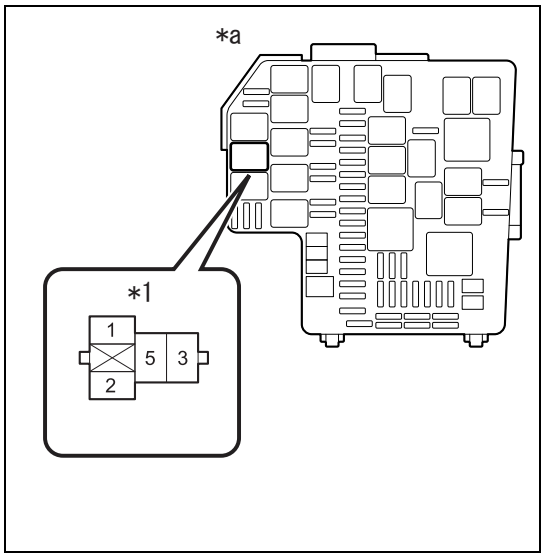

(1) Remove the FAN NO. 3 relay from the engine compartment relay block.
(2) Measure the voltage between the terminals.
CAUTION:
When measuring the voltage by putting the tester probe etc. on the holder, the holder may be damaged if the probe is pressed against the holder too strong.

Voltage

Inspection terminals	Inspection conditions	Standard value
5 (FAN NO. 3) - chassis ground	Always	11 to 14V

Captions in illustration

*1	FAN NO. 3 relay
*a	Relay not connected (Engine compartment relay block)

NG → Repair or replacement of wiring harness or connector

OK

3	Engine compartment relay block check (power supply voltage)

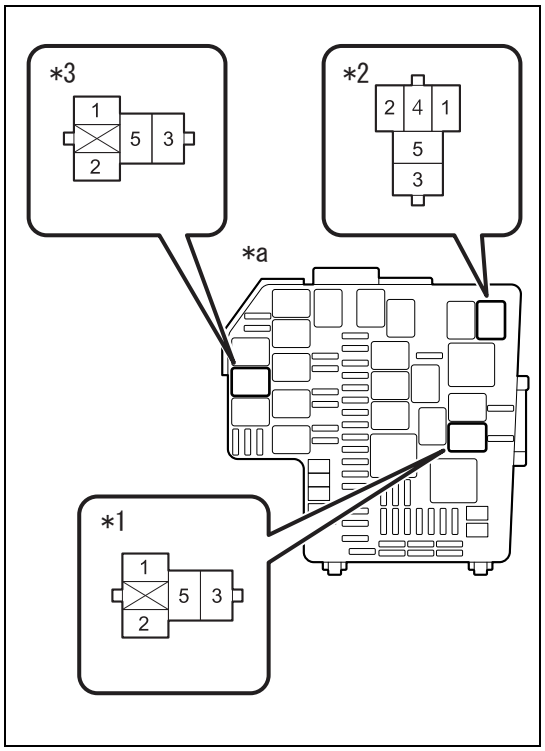

(1) Remove the FAN NO. 1 relay, FAN NO. 2 relay and FAN NO. 3 relay from the engine compartment relay block.
(2) Turn the ignition switch to ON.
(3) Measure the voltage between the terminals.
CAUTION:
When measuring the voltage by putting the tester probe etc. on the holder, the holder may be damaged if the probe is pressed against the holder too strong.

Inspection terminals	Inspection conditions	Standard value
2 (FAN NO. 1) - chassis ground	IG ON	11 to 14V
1 (FAN NO. 2) - chassis ground	IG ON	11 to 14V
2 (FAN NO. 3) - chassis ground	IG ON	11 to 14V

Captions in illustration

*1	FAN NO. 1 relay
*2	FAN NO. 2 relay
*3	FAN NO. 3 relay
*a	Relay not connected (Engine compartment relay block)

NG → Repair or replacement of wiring harness or connector

OK

4	FAN NO. 1 relay unit inspection

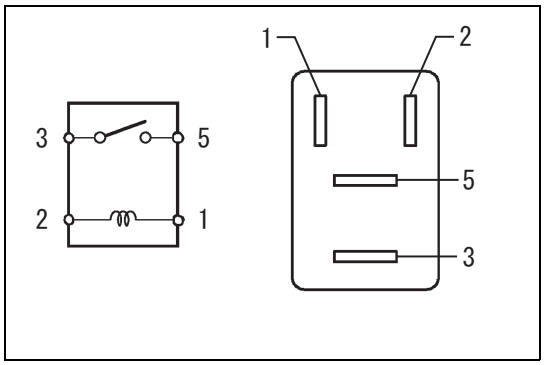

(1) Remove the FAN NO. 1 relay from the engine compartment relay block.
(2) Measure the resistance between the terminals.

Resistance

Inspection terminals	Inspection conditions	Standard value
3 - 5	When the battery voltage is not applied to the terminals 1 and 2:	10 kΩ or more
3 - 5	When the battery voltage is applied to the terminals 1 and 2:	Less than 1 Ω

NG → FAN NO. 1 relay replacement

OK

5	FAN NO. 2 relay unit inspection

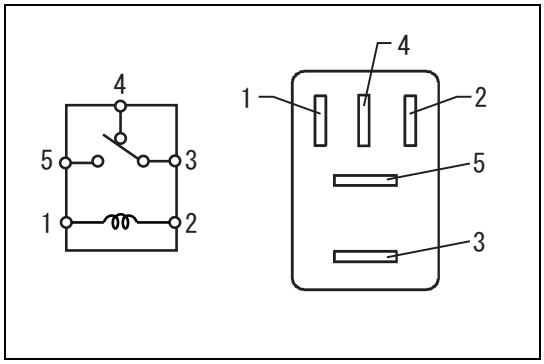

(1) Remove the FAN NO. 2 relay from the engine compartment relay block.
(2) Measure the resistance between the terminals.

Resistance

Inspection terminals	Inspection conditions	Standard value
3 - 4	When the battery voltage is not applied to the terminals 1 and 2:	Less than 1 Ω
3 - 4	When the battery voltage is applied to the terminals 1 and 2:	10 kΩ or more
3 - 5	When the battery voltage is not applied to the terminals 1 and 2:	10 kΩ or more
3 - 5	When the battery voltage is applied to the terminals 1 and 2:	Less than 1 Ω

NG → FAN NO. 2 relay replacement

OK

6	FAN NO. 3 relay unit inspection

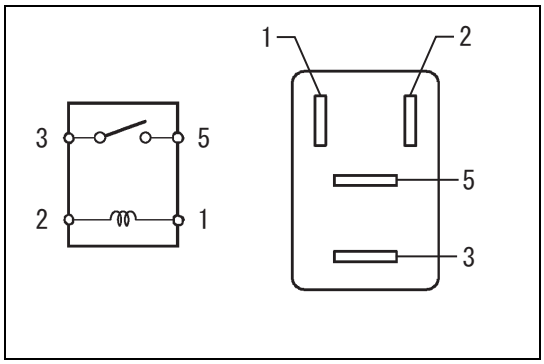

(1) Remove the FAN NO. 3 relay from the engine compartment relay block.
(2) Measure the resistance between the terminals.

Resistance

Inspection terminals	Inspection conditions	Standard value
3 - 5	When the battery voltage is not applied to the terminals 1 and 2:	10 kΩ or more
3 - 5	When the battery voltage is applied to the terminals 1 and 2:	Less than 1 Ω

NG → FAN NO. 3 relay replacement

OK

7	Check wiring harness and connector (FAN NO. 2 relay - chassis ground)

NOTE:
For the inspection procedure and precautions for wiring harnesses and connectors, refer to IN - 36.

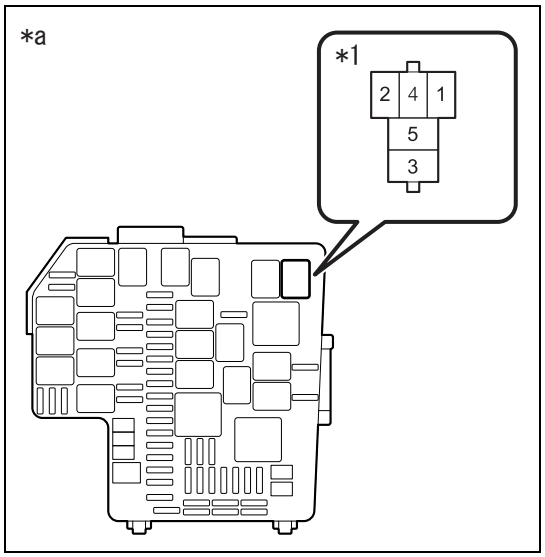

(1) Remove the FAN NO. 2 relay from the engine compartment relay block.
(2) Measure the resistance between the terminals.
CAUTION:
When measuring the voltage by putting the tester probe etc. on the holder, the holder may be damaged if the probe is pressed against the holder too strong.

Resistance

Inspection terminals	Inspection conditions	Standard value
5 (FAN NO. 2) - chassis ground	Always	Less than 1 Ω

Captions in illustration

*1	FAN NO. 2 relay
*a	Relay not connected (Engine compartment relay block)

NG → Repair or replacement of wiring harness or connector

OK

8	Cooling fan motor check

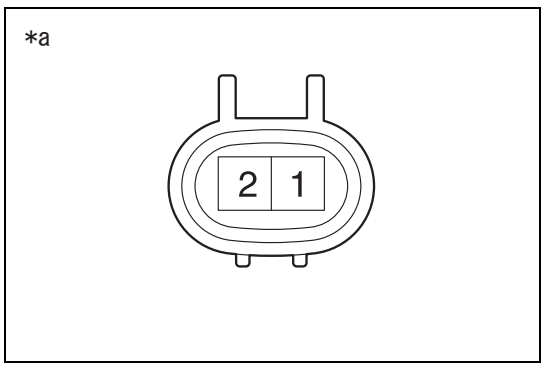

(1) Disconnect the cooling fan motor connector.
(2) Connect the battery positive (+) terminal to the terminal 1 of cooling fan motor connector and the negative (-) terminal to the terminal 2.
(3) Check the cooling fan for rotation.
Result: Rotates

Captions in illustration

*a	Connector not connected (Cooling fan motor)

NG → Cooling fan motor replacement (Refer to CO - 41)

OK

9	Check wiring harness and connector (cooling fan motor - chassis ground)

NOTE:
For the inspection procedure and precautions for wiring harnesses and connectors, refer to IN - 36.
(1) Disconnect the connector A45 of cooling fan motor.
(2) Measure the resistance between the terminals.

Resistance

Inspection terminals	Inspection conditions	Standard value
A45-1 - Chassis ground	Always	Less than 1 Ω

NG → Repair or replacement of wiring harness or connector

OK

10	Check wiring harness and connector (cooling fan motor - engine compartment relay block)

NOTE:
For the inspection procedure and precautions for wiring harnesses and connectors, refer to IN - 36.

(1) Disconnect the connector A45 of cooling fan motor.
(2) Remove the FAN NO. 1 relay and FAN NO. 2 relay from the engine compartment relay block.

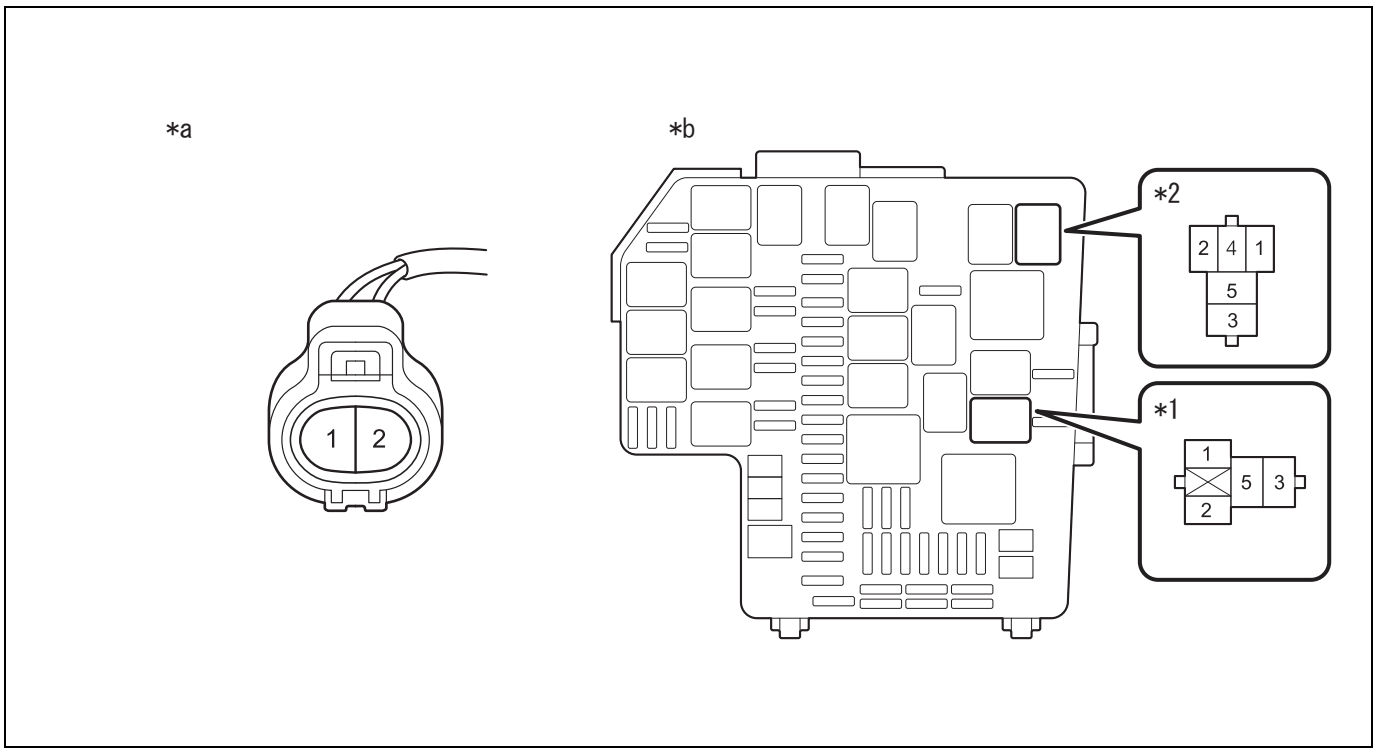

Captions in illustration

*1	FAN NO. 1 relay	*2	FAN NO. 2 relay
*a	Front side of vehicle wiring harness connector (Connector for connecting cooling fan motor)	*b	Relay not connected (Engine compartment relay block)

(3) Measure the resistance between the terminals.
CAUTION:
When measuring the voltage by putting the tester probe etc. on the holder, the holder may be damaged if the probe is pressed against the holder too strong.

Resistance (open circuit check)

Inspection terminals	Inspection conditions	Standard value
A45-2 - 3 (FAN NO. 1 relay)	Always	Less than 1 Ω
A45-2 - 4 (FAN NO. 2 relay)	Always	Less than 1 Ω

Resistance (short circuit check)

Inspection terminals	Inspection conditions	Standard value
A45-2 and 3 (FAN NO. 1 relay) - other terminals and chassis ground	Always	10 kΩ or more
A45-2 and 4 (FAN NO. 2 relay) - other terminals and chassis ground	Always	10 kΩ or more

NG → Repair or replacement of wiring harness or connector

OK

11	Cooling fan motor NO. 2 check

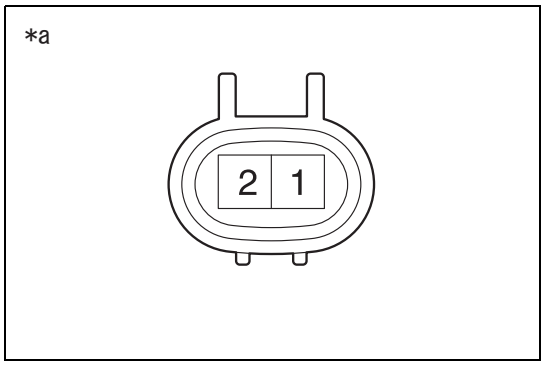

(1) Disconnect the cooling fan motor NO. 2 connector.
(2) Connect the battery positive (+) terminal to the terminal 1 of cooling fan motor NO. 2 connector and the negative (-) terminal to the terminal 2.
(3) Check the cooling fan for rotation.
Result: Rotates

Captions in illustration

*a	Connector not connected (Cooling fan motor NO. 2)

NG → Cooling fan motor NO.2 replacement (Refer to CO - 41)

OK

12	Check wiring harness and connector (cooling fan motor NO. 2 - engine compartment relay block)

NOTE:
For the inspection procedure and precautions for wiring harnesses and connectors, refer to IN - 36.
(1) Disconnect the cooling fan motor NO. 2 connector A46.
(2) Remove the FAN NO. 2 relay and FAN NO. 3 relay from the engine compartment relay block.

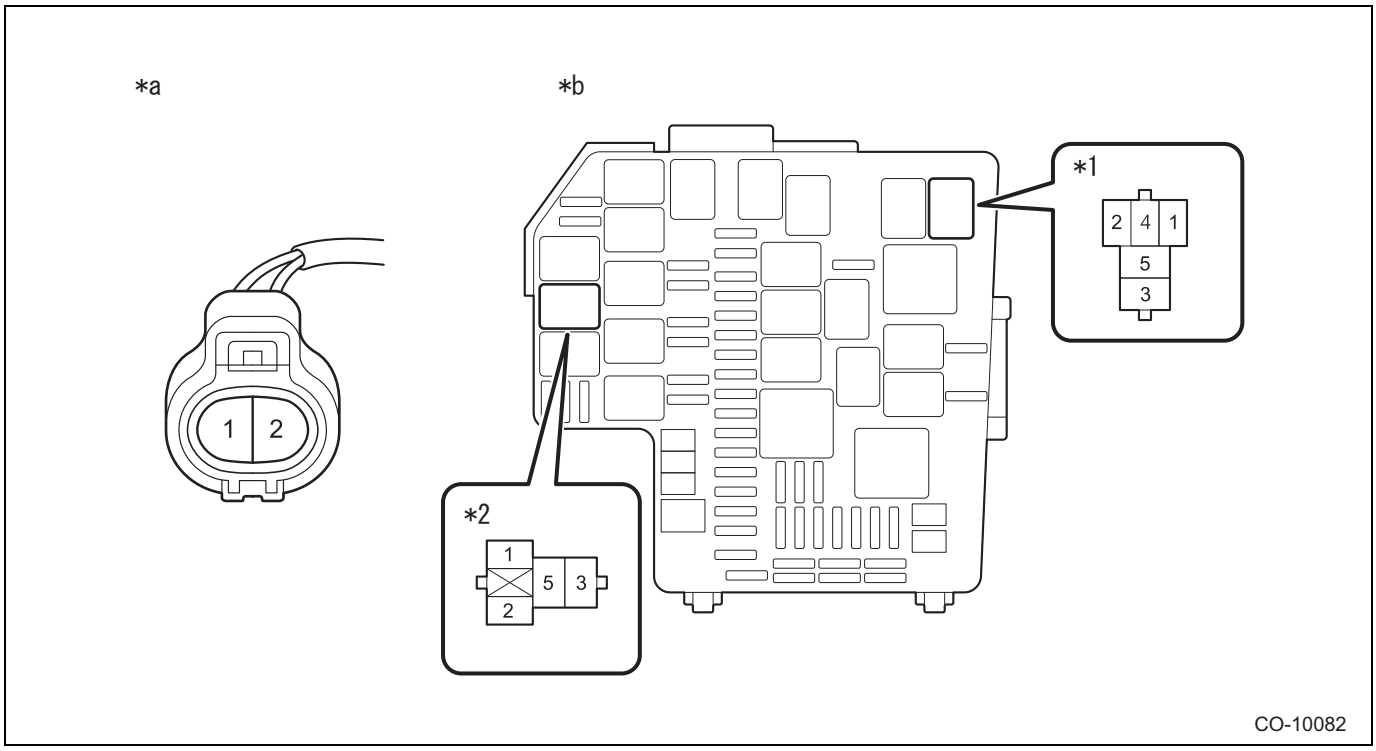

Captions in illustration

*1	FAN NO. 2 relay	*2	FAN NO. 3 relay
*a	Front side of vehicle wiring harness connector (Connector for connecting cooling fan motor NO. 2)	*b	Relay not connected (Engine compartment relay block)

(3) Measure the resistance between the terminals.
CAUTION:
When measuring the voltage by putting the tester probe etc. on the holder, the holder may be damaged if the probe is pressed against the holder too strong.

Resistance (open circuit check)

Inspection terminals	Inspection conditions	Standard value
A46-1 - 3 (FAN NO. 2 relay)	Always	Less than 1 Ω
A46-2 - 3 (FAN NO. 3 relay)	Always	Less than 1 Ω

Resistance (short circuit check)

Inspection terminals	Inspection conditions	Standard value
A46-1 and 3 (FAN NO. 2 relay) - other terminals and chassis ground	Always	10 kΩ or more
A46-2 and 3 (FAN NO. 3 relay) - other terminals and chassis ground	Always	10 kΩ or more

NG → Repair or replacement of wiring harness or connector

OK

13	Engine compartment relay block check

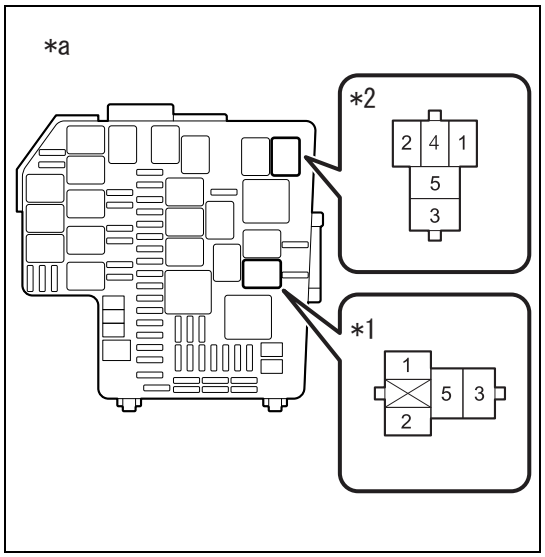

(1) Remove the FAN NO. 1 relay and FAN NO. 2 relay from the engine compartment relay block.
(2) Measure the resistance between the terminals.
CAUTION:
When measuring the voltage by putting the tester probe etc. on the holder, the holder may be damaged if the probe is pressed against the holder too strong.

Resistance (open circuit check)

Inspection terminals	Inspection conditions	Standard value
1 (FAN NO. 1 relay) - 2 (FAN NO. 2 relay)	Always	Less than 1 Ω

Resistance (short circuit check)

Inspection terminals	Inspection conditions	Standard value
1 (FAN NO. 1 relay) and 2 (FAN NO. 2 relay) - other terminals and chassis ground	Always	10 kΩ or more

Captions in illustration

*1	FAN NO. 1 relay
*2	FAN NO. 2 relay
*a	Relay not connected (Engine compartment relay block)

NG → Engine compartment relay block replacement

OK

14	Check wiring harness and connector (engine control computer - engine compartment relay block)

NOTE:
For the inspection procedure and precautions for wiring harnesses and connectors, refer to IN - 36.

(1) Disconnect the connector A35 of engine control computer.
(2) Remove the FAN NO. 2 relay and FAN NO. 3 relay from the engine compartment relay block.
(3) Measure the resistance between the terminals.
CAUTION:
When measuring the voltage by putting the tester probe etc. on the holder, the holder may be damaged if the probe is pressed against the holder too strong.

Resistance (open circuit check)

Inspection terminals	Inspection conditions	Standard value
A35-11 (FAN1) - 1 (FAN NO. 1 relay)	Always	Less than 1 Ω
A35-11 (FAN1) - 2 (FAN NO. 2 relay)	Always	Less than 1 Ω
A35-12 (FAN2) - 1 (FAN NO. 3 relay)	Always	Less than 1 Ω

Resistance (short circuit check)

Inspection terminals	Inspection conditions	Standard value
A35-11 (FAN1) and 1 (FAN NO. 1 relay) - other terminals and chassis ground	Always	10 kΩ or more
A35-11 (FAN1) and 2 (FAN NO. 2 relay) - other terminals and chassis ground	Always	10 kΩ or more
A35-12 (FAN2) and 1 (FAN NO. 3 relay) - other terminals and chassis ground	Always	10 kΩ or more

NG → Repair or replacement of wiring harness or connector

OK

Replacement of the engine control computer (Refer to ES - 671)

Coolant (FA20)

Replacement

1. Coolant (SUBARU Super Coolant) draining

   WARNING:

   To avoid the risk of burn, do not remove the radiator cap SUB-ASSY when the engine and radiator are hot. The fluid and steam may blow out due to the pressure.

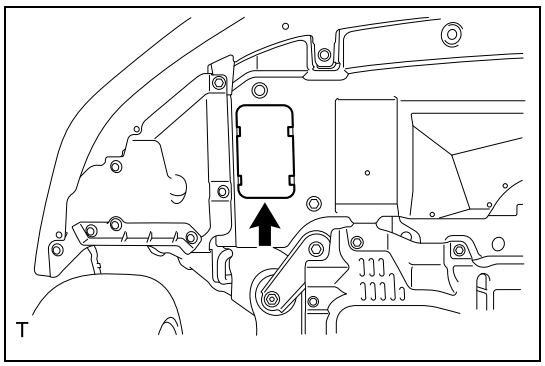

   (1) Remove the service hole cover of front bumper under cover.

   (2) Connect the hose with an inner diameter of φ8 mm {0.315 in} to the drain plug.

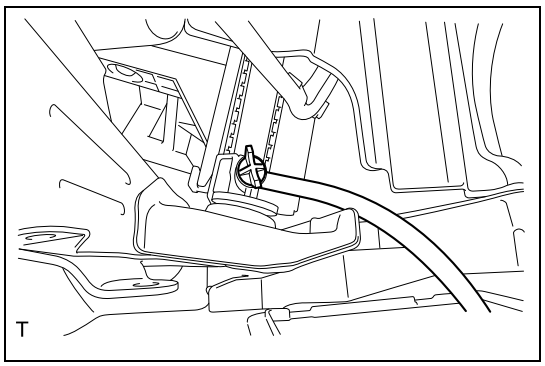

   (3) Loosen the radiator drain cock plug.

   (4) Remove the radiator cap SUB-ASSY and drain the coolant.

2. Coolant (SUBARU Super Coolant) refill

   NOTE:

   Turn the A/C switch to OFF before refilling the coolant.

   (1) Tighten the radiator drain cock plug.

   (2) Fill the cooling system conditioner into the water inlet filler.

   (3) Fill the coolant of the specified concentration into the water inlet filler neck up to the filler neck position.

   NOTE:

   - The SUBARU Super Coolant contains anti-freeze and anti-rust agents for the engines with an aluminum cylinder block. Be sure to use the SUBARU Super Coolant, since the use of undesignated coolant may cause corrosion.
   - Press the radiator hose No. 1 and radiator outlet hose several times and add the coolant if the level at the water inlet filler neck drops.

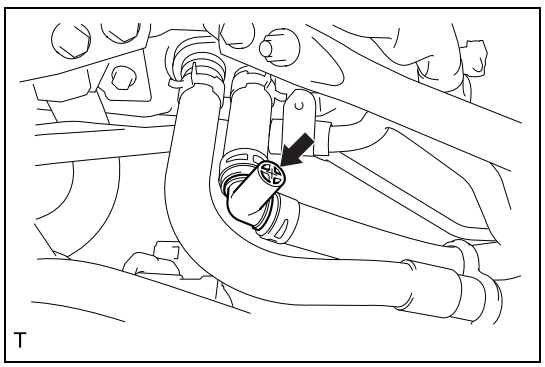

   (4) Open the air bleeding plug on the heater hose side.

(5) If the level at the water inlet filler neck drops, fill the coolant into the radiator filler neck up to the filler neck position.
(6) Close the air bleeder valve when the coolant comes out from the air bleeder plug on the heater hose side.
(7) Fill the coolant of the specified concentration up to the FULL level of radiator reservoir tank.
(8) Tighten the radiator cap. [*1]
(9) Start the engine. Race 5 to 6 times at 3,000 r/min or less and then stop the engine. [*2]
NOTE:
Complete this operation within 40 seconds.
(10) After about 1 minute, remove the radiator cap, open the air bleeding plug of heater hose side and fill the coolant if the level at the water inlet filler neck is low, and then close the air bleeding plug. [*3]
(11) Repeat the steps [*1], [*2] and [*3] until the level at the water inlet filler neck does not drop.
NOTE:
When the engine warms up and the thermostat valve opens, the air from the radiator hose No. 1 enters into the radiator side. Therefore, complete the steps before the engine warms up.
(12) Tighten the radiator cap and radiator reservoir tank cap.
(13) Start the engine and operate the heater at maximum hot position and the blower speed setting to "LO".
(14) Run the engine at 2,000 r/min or less until the radiator fan starts and stops. [*4]
NOTE:
Be careful with the engine coolant temperature to prevent overheating.
(15) Stop the engine and wait until the coolant temperature lowers to 30°C (86°F) or less. [*5]
(16) Remove the radiator cap, and if the coolant level drops, fill the coolant into the radiator up to the filler neck position and the radiator reservoir tank up to its FULL level. [*6]
(17) Tighten the radiator cap. [*7]
(18) Set the heater setting to maximum hot position and the blower speed setting to LO and start the engine. Perform racing at 3,000 r/min or less. [*8]
(19) If the flowing sound of engine coolant is heard from the heater core at this time, perform the steps [*4], [*5], [*6], [*7] and [*8] again.

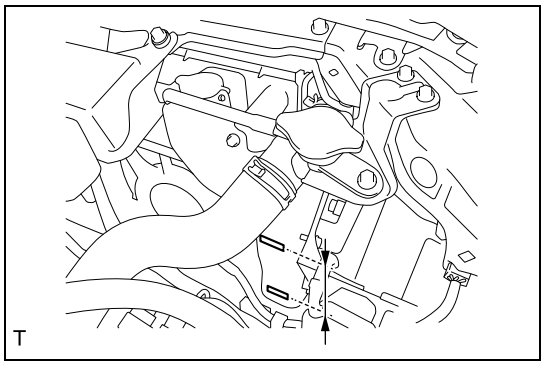

(20) When the level does not drop any more, adjust the level of radiator reservoir tank to the FULL line.

3. Leak check of coolant (SUBARU Super Coolant) (Refer to CO - 2)

Adjustment

1. SUBARU Super Coolant concentration adjustment
CAUTION:
The SUBARU Super Coolant must be used at a concentration in the range of from 50 to 60 % to maximize the performance of the antifreeze and antiseptic agents.
NOTE:
When adjusting the concentration of SUBARU Super Coolant according to the temperature, select an appropriate SUBARU Super Coolant concentration from the table below and adjust the concentration of SUBARU Super Coolant (concentrated type) with the diluting water to achieve the appropriate concentration.

Relationship between SUBARU Super Coolant concentration and freezing temperature

SUBARU Super Coolant concentration	50%	55%	60%
Freezing temperature	-36°C {-33°F}	-41°C {-42°F}	-50°C {-58°F}

Water pump (FA20)

Exploded view

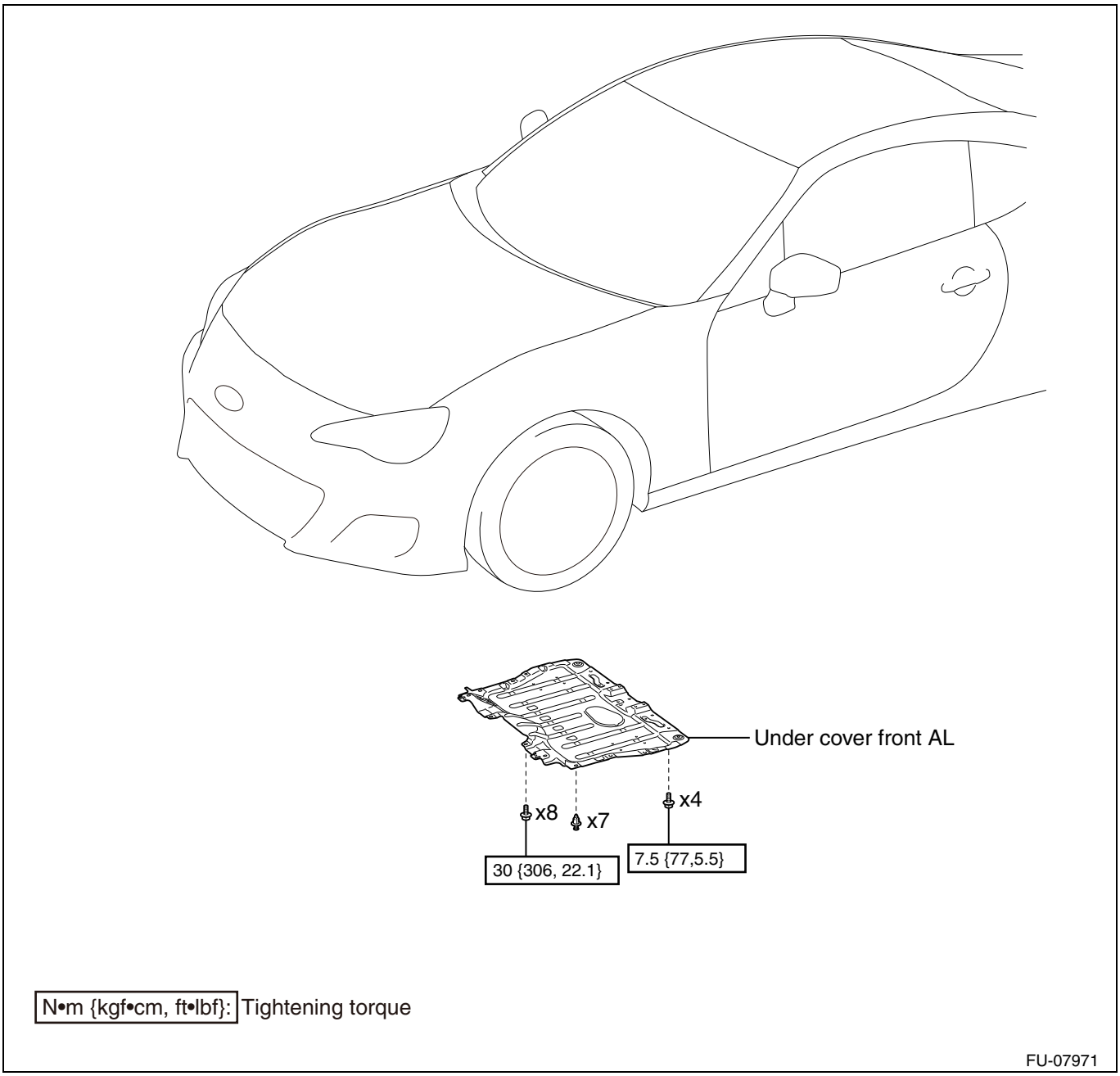

N•m {kgf•cm, ft•lbf}: Tightening torque

FU-07971

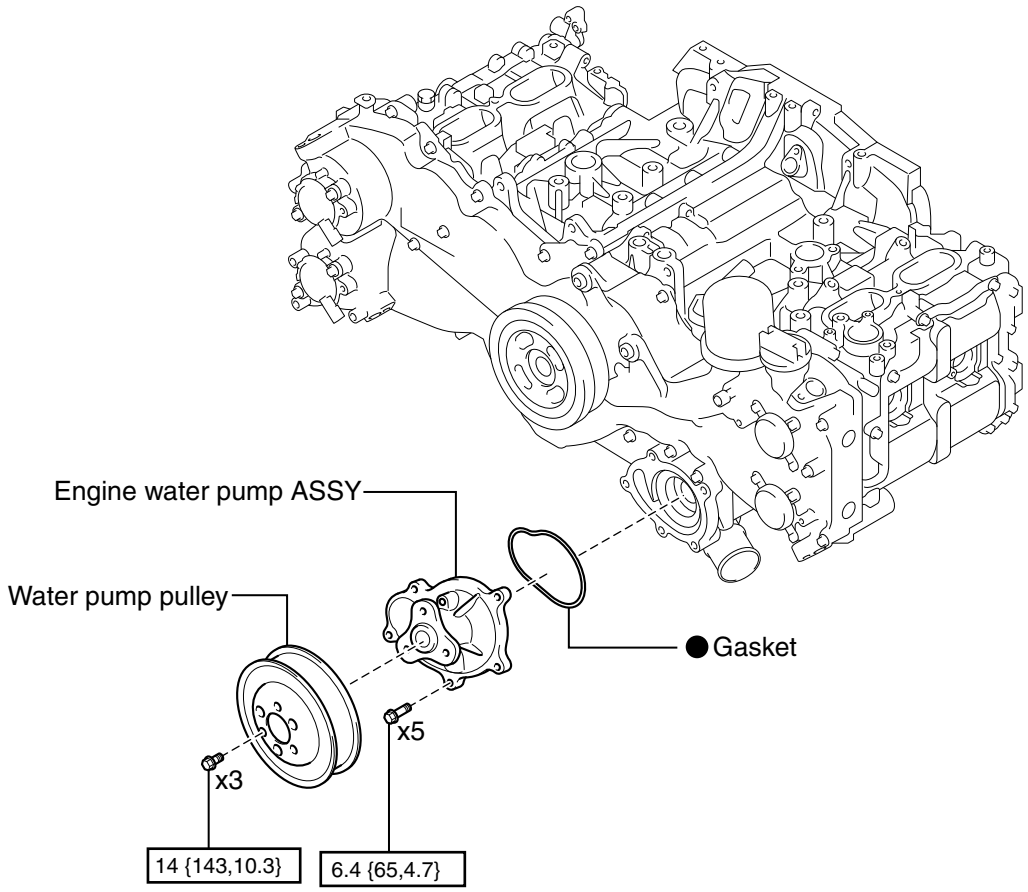

N•m {kgf•cm, ft•lbf} : Tightening torque ● Non-reusable parts

CO-03065

Removal

1. Removal of under cover front AL (Refer to IE - 39)
2. Draining of coolant (SUBARU Super Coolant) (Refer to CO - 16)
3. Removal of V-belt (Refer to EM - 5)
4. Removal of exhaust manifold (Refer to IE - 35)

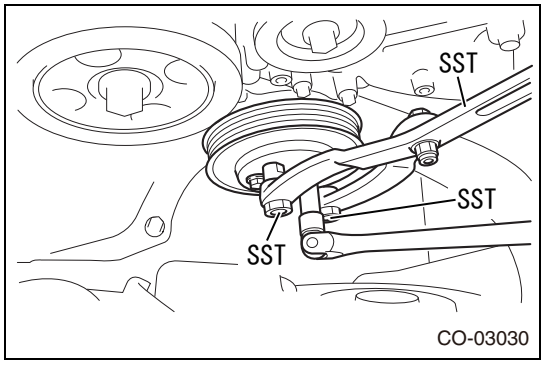

CO-03030

5. Removal of water pump pulley
   (1) Use the SST to secure the water pump pulley.
   SST 18355AA000, 18334AA030

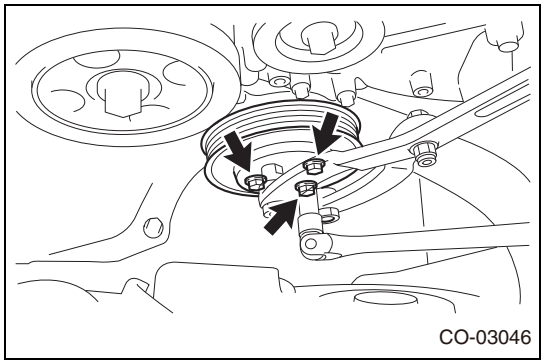

(2) Remove the three bolts and remove the water pump pulley.

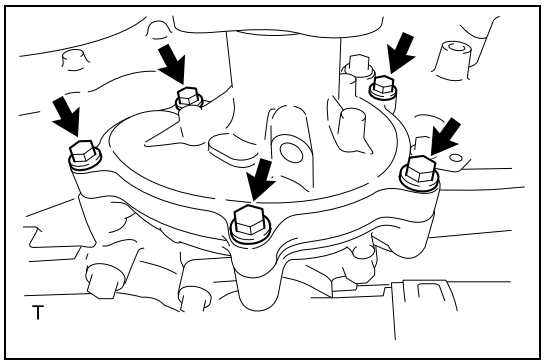

6. Removal of engine water pump ASSY
   (1) Remove the five bolts and remove the engine water pump ASSY and gasket.

Installation

1. Engine water pump ASSY installation
   (1) Install a new gasket and install the engine water pump ASSY with the five bolts.
   Standard value:T=6.4N·m {65kgf·cm} {4.7ft·lbf}
2. Water pump pulley installation
   (1) Temporarily tighten the three bolts to secure the water pump pulley.
   (2) Use the SST to secure the water pump pulley.
   SST 18355AA000, 18334AA030
   (3) Tighten the three bolts.
   Standard value:T=14N·m {143kgf·cm} {10.3ft·lbf}
3. Installation of exhaust manifold (Refer to IE - 36)
4. Installation of V-belt (Refer to EM - 7)
5. Replenishing of coolant (SUBARU Super Coolant) (Refer to CO - 16)
6. Leak check of coolant (SUBARU Super Coolant) (Refer to CO - 2)
7. Under cover front AL installation (Refer to IE - 46)

On-vehicle inspection

1. Engine water pump ASSY check
   (1) Make sure that there is no bearing noise and drag.
   NOTE:
   If noise or drag is noted, replace the engine water pump ASSY.
   (2) Make sure that the water pump pulley has no fault.
   (3) Check the impeller for damage or abnormal deformation.
   NOTE:
   If the impeller is scratched or abnormally deformed, replace the engine water pump ASSY.

Radiator ASSY (FA20)

Exploded view

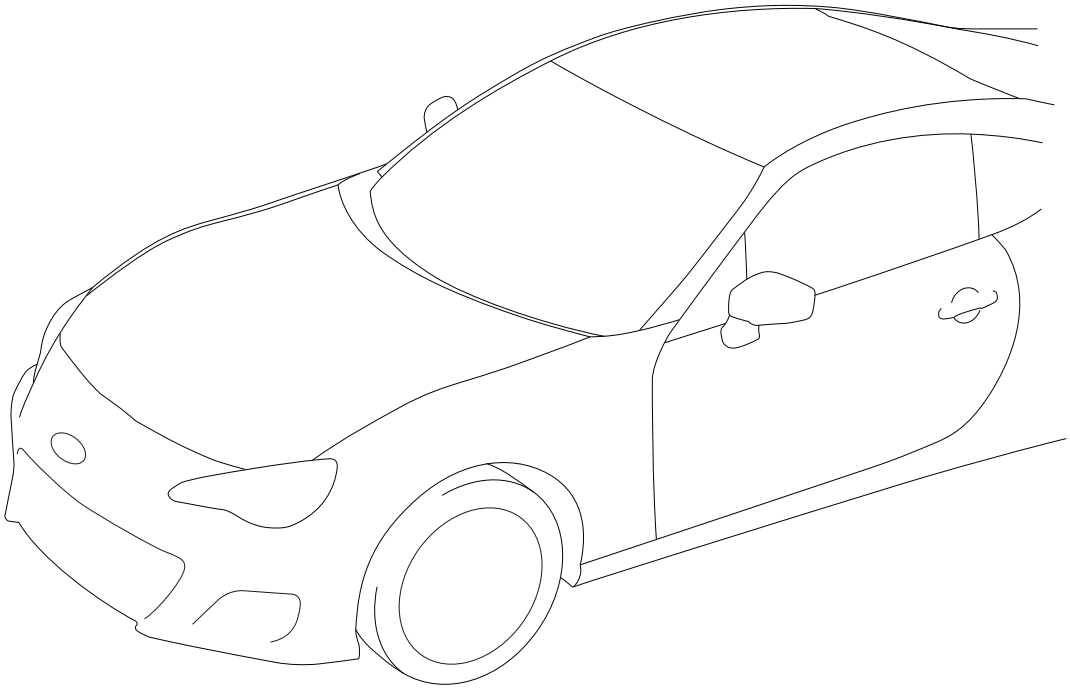

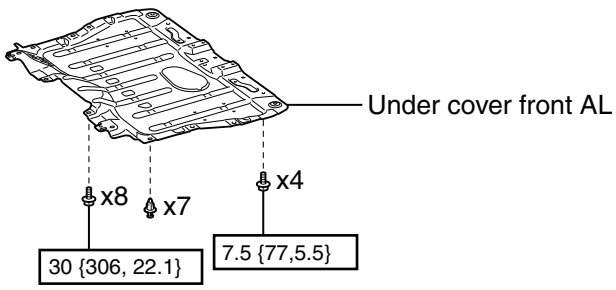

N•m {kgf•cm, ft•lbf}: Tightening torque

FU-07971

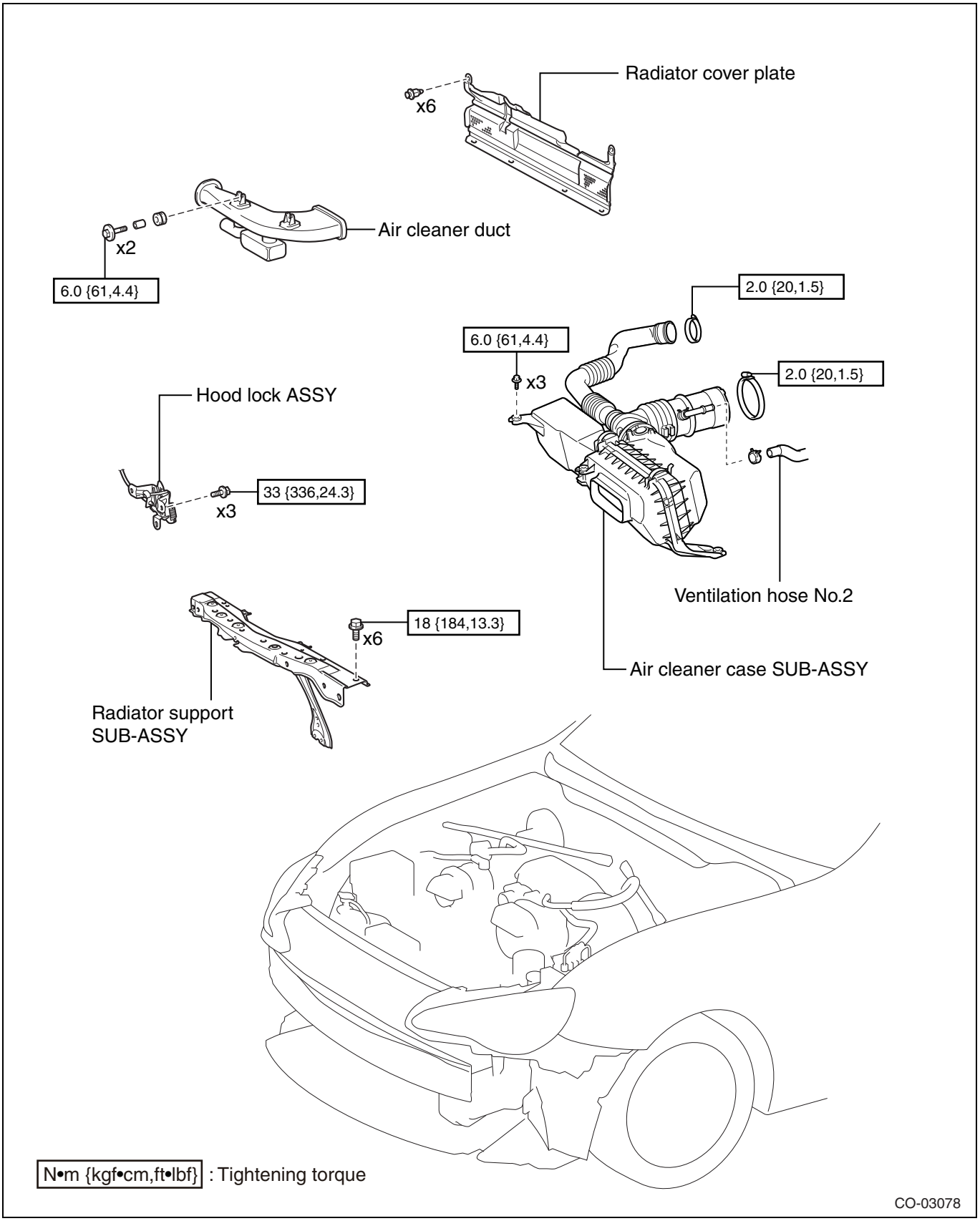
Radiator cover plate
x6
Air cleaner duct
x2
6.0 {61,4.4}
2.0 {20,1.5}
6.0 {61,4.4}
x3
2.0 {20,1.5}
Hood lock ASSY
33 {336,24.3}
x3
Ventilation hose No.2
18 {184,13.3}
x6
Air cleaner case SUB-ASSY
Radiator support
SUB-ASSY
N•m {kgf•cm,ft•lbf} : Tightening torque
CO-03078

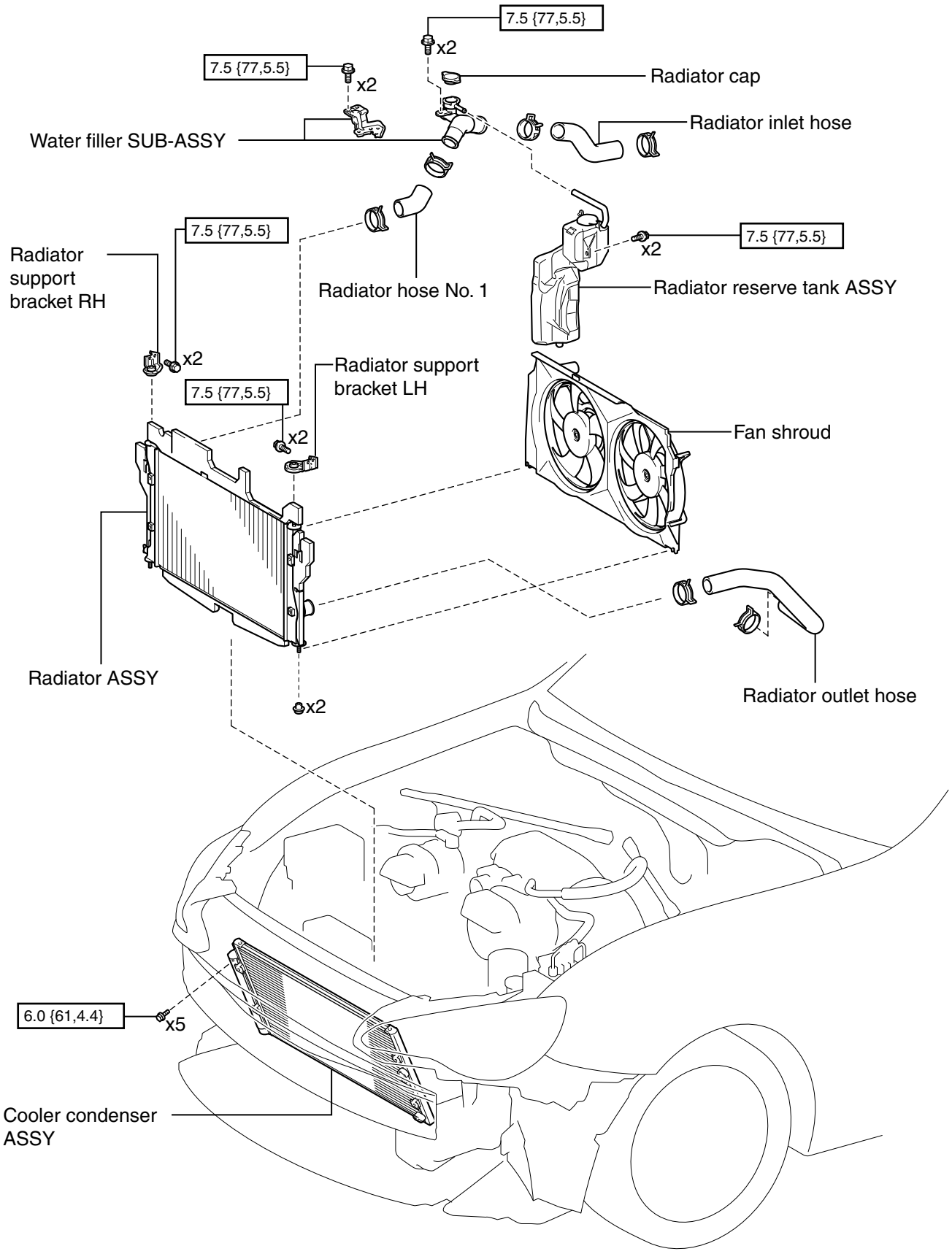

N•m {kgf•cm, ft•lbf} : Tightening torque

CO-03067

CO

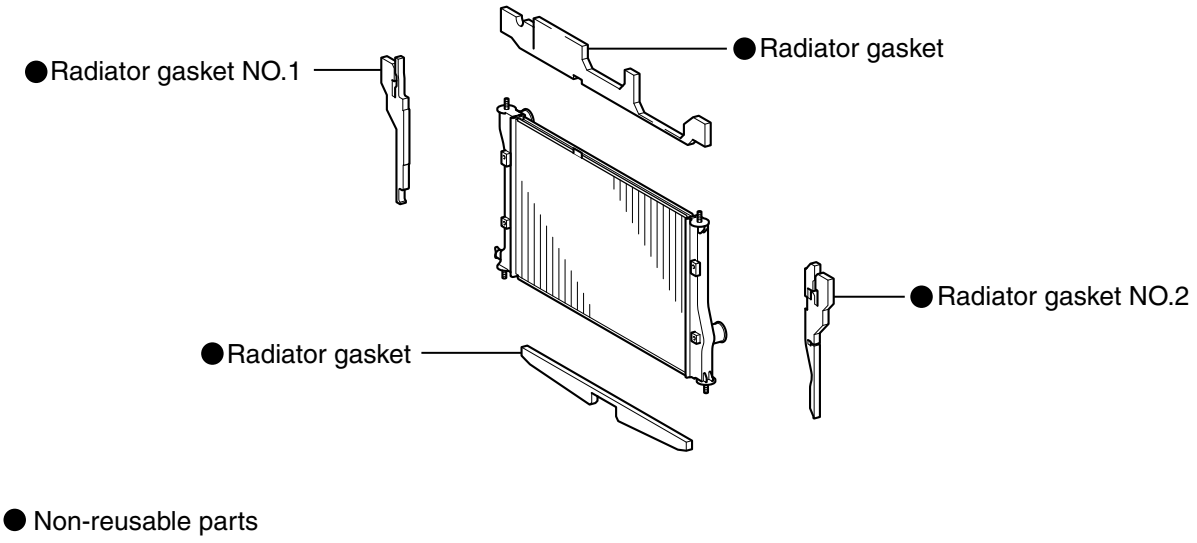

● Non-reusable parts

T

Removal

1. Disconnection of the battery ground terminal (Refer to IN - 6)

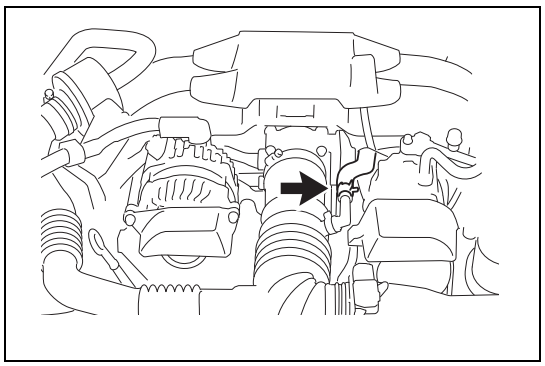

2. Removal of air cleaner case SUB-ASSY
   (1) Move the hose clip and disconnect the ventilation hose NO. 2.

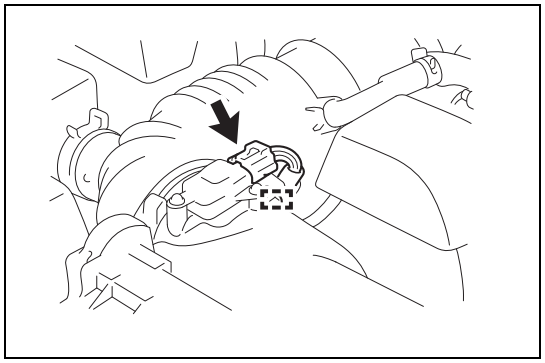

   (2) Disconnect the connector from the intake air flow meter SUB-ASSY.
   (3) Release the clamp and disconnect the wiring harness from the air cleaner cap.

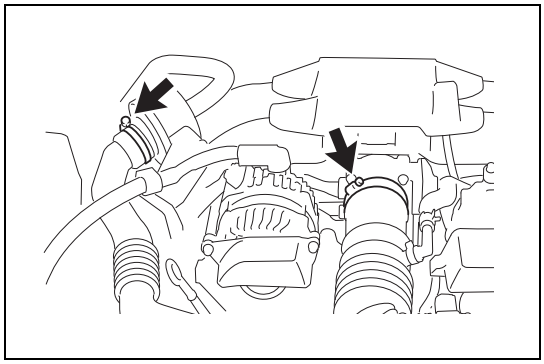

(4) Loosen the two hose clamps and remove the air cleaner duct and air intake boot.

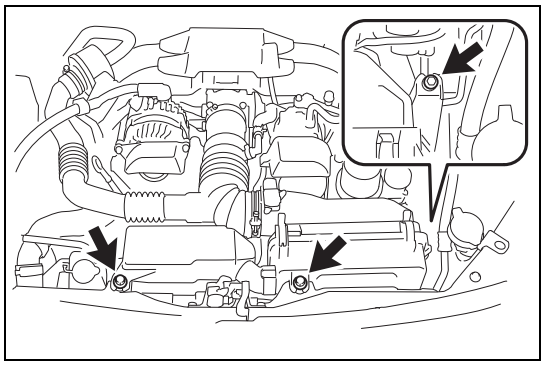

(5) Remove the three bolts and remove the air cleaner case SUB-ASSY.

3. Removal of the front bumper cover (Refer to ET - 4)
4. Removal of under cover front AL (Refer to IE - 39)
5. Draining of coolant (SUBARU Super Coolant) (Refer to CO - 16)
6. Disconnection of radiator outlet hose (Refer to CO - 37)

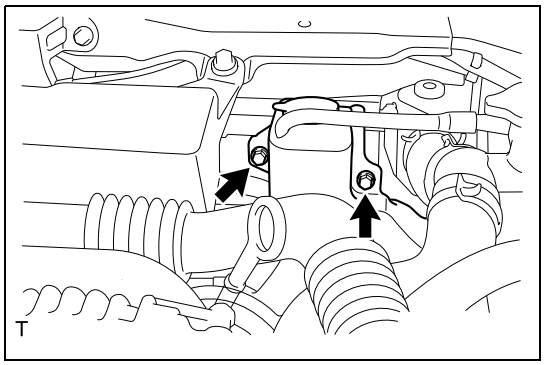

7. Radiator reservoir tank ASSY removal
   (1) Remove the two bolts and remove the radiator reservoir tank ASSY.

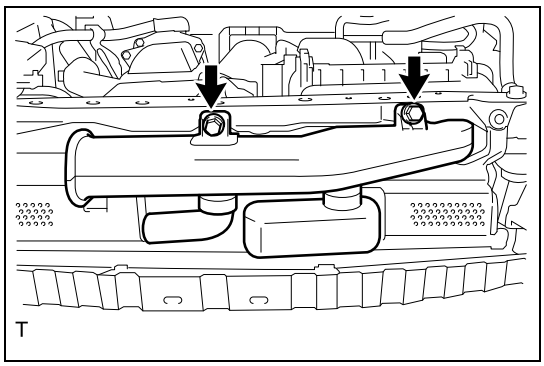

8. Air cleaner duct removal
   (1) Remove the two bolts and remove the air cleaner duct.

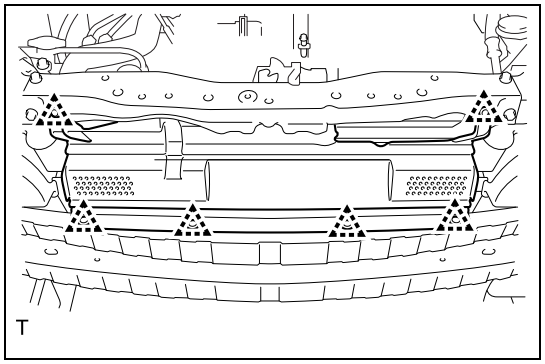

9. Radiator cover plate removal
   (1) Release the six clips and remove the radiator cover plate.

10. Removal of water filler SUB-ASSY
    (1) Disconnect the radiator cap hose.

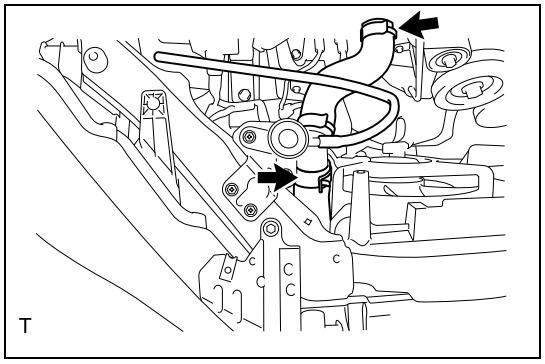

(2) Move the two hose clamps and disconnect the radiator inlet hose and radiator hose NO. 1.
NOTE:
Since the hose has its proper installation position, mark the alignment mark before removing it.

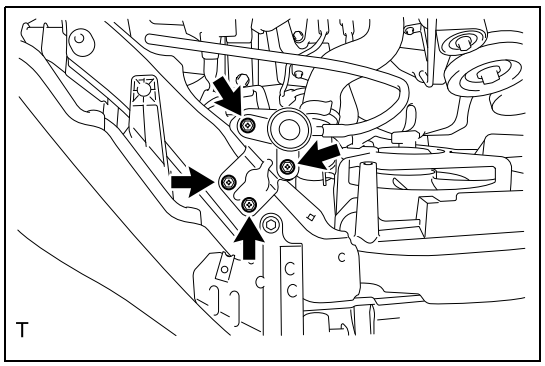

(3) Remove the four bolts and remove the radiator cap stay.

11. Disconnection of hood lock ASSY (Refer to DH - 24)

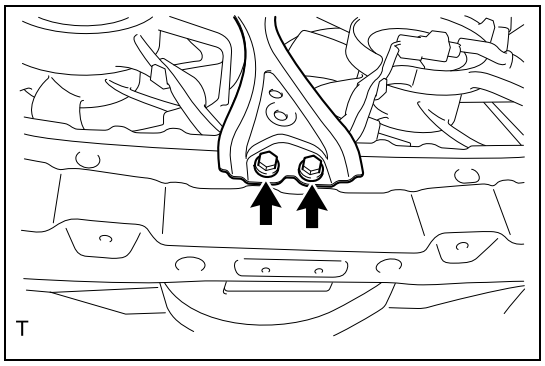

12. Radiator support SUB-ASSY removal
    (1) Remove the two lower bolts of radiator support SUB-ASSY.

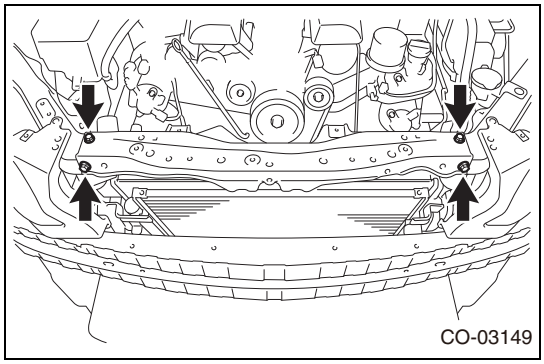

(2) Remove the four bolts and remove the radiator support SUB-ASSY.

13. Cooler condenser ASSY disconnection

(1) Remove the bolt.

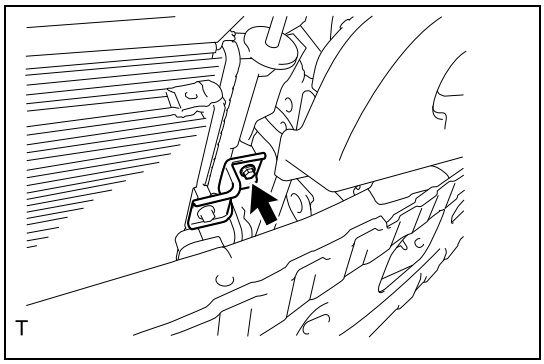

(2) Remove the bolt.

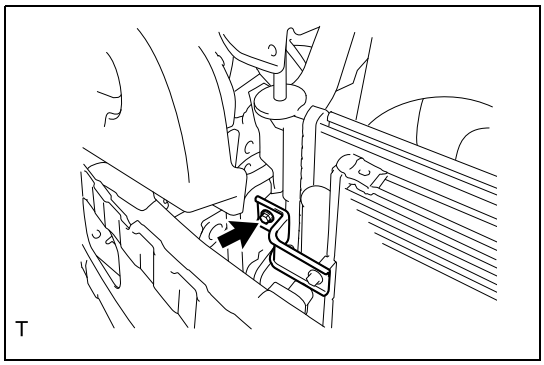

(3) Remove the bolt.

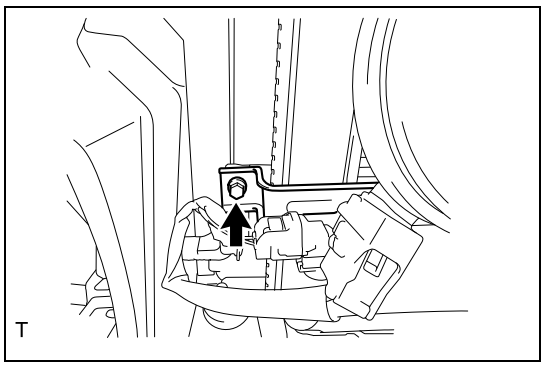

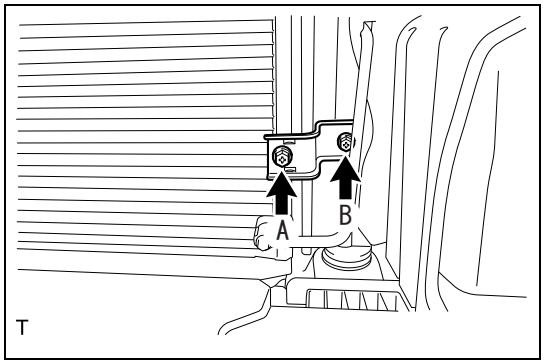

(4) Remove the bolt A.
Remove the bolt B and disconnect the cooler condenser ASSY from the radiator ASSY.

14. Fan shroud removal (Refer to CO - 41)

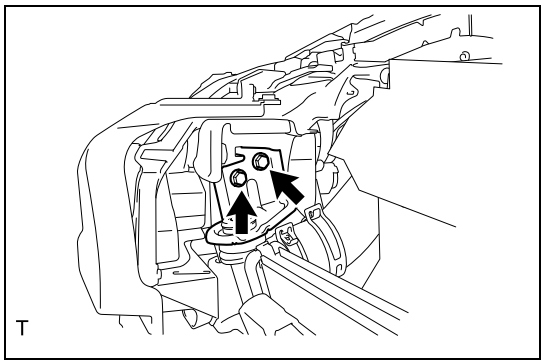

15. Radiator ASSY removal
(1) Remove the two bolts and remove the radiator support bracket RH.

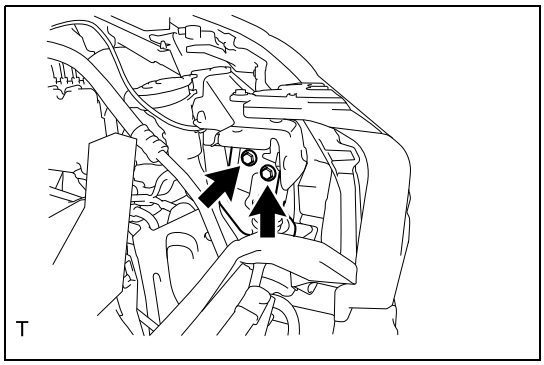

(2) Remove the two bolts and remove the radiator support bracket LH.

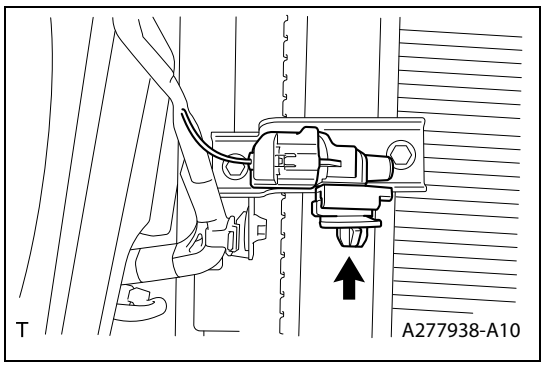

(3) Disconnect the ambient sensor connector.

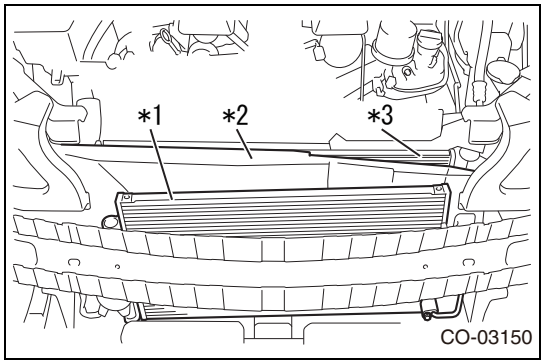

(4) Remove the radiator ASSY while lifting the radiator outlet hose.

CAUTION:

Insert a cardboard, blanket, etc. between the radiator ASSY and cooler condenser ASSY to protect the cooler condenser ASSY.

Captions in illustration

*1	Cooler condenser ASSY
*2	Cardboard or blanket
*3	Radiator ASSY

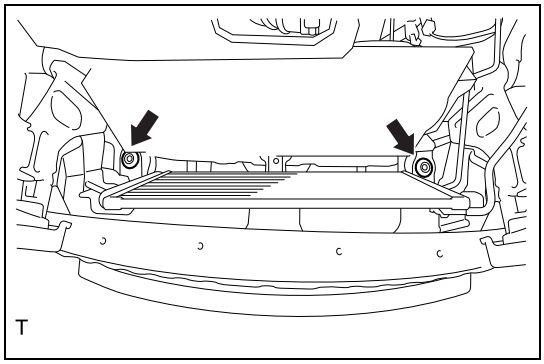

(5) Remove the two radiator supports LWR.

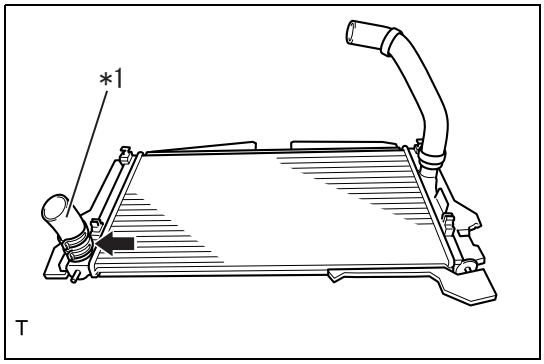

16. Radiator hose NO. 1 removal

(1) Move the hose clamp and remove the radiator hose NO. 1 from the radiator ASSY.

Captions in illustration

*1	Radiator hose NO. 1

NOTE:

Since the hose has its proper installation position, mark the alignment mark before removing it.

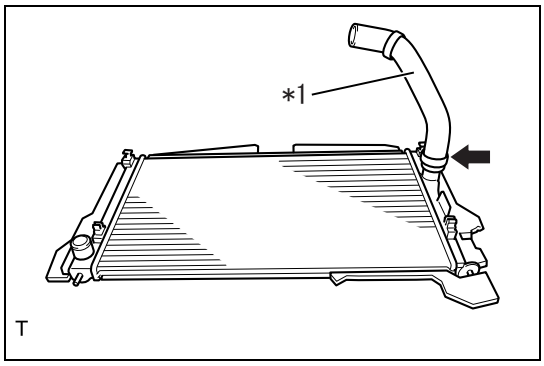

17. Radiator outlet hose removal

(1) Move the hose clamp and remove the radiator outlet hose.

Captions in illustration

*1	Radiator outlet hose

NOTE:

Since the hose has its proper installation position, mark the alignment mark before removing it.

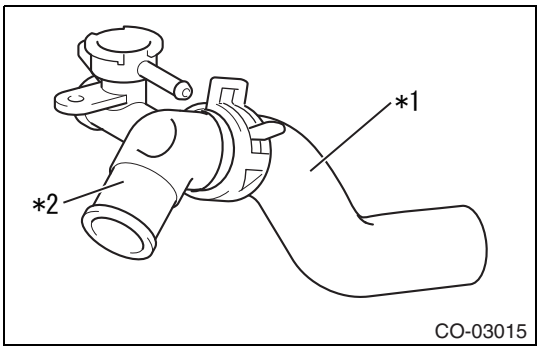

18. Radiator inlet hose removal

(1) Move the hose clamp and remove the radiator inlet hose from the radiator cap stay.

Captions in illustration

*1	Radiator inlet hose
*2	Radiator cap stay

NOTE:

Since the hose has its proper installation position, mark the alignment mark before removing it.

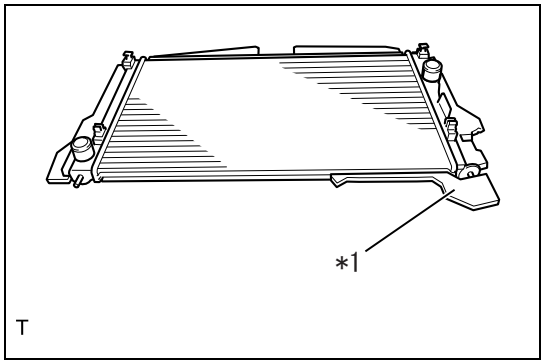

19. Radiator gasket removal (for the upper side)
    (1) Remove the radiator gasket.

Captions in illustration

*1	Radiator gasket (upper side)

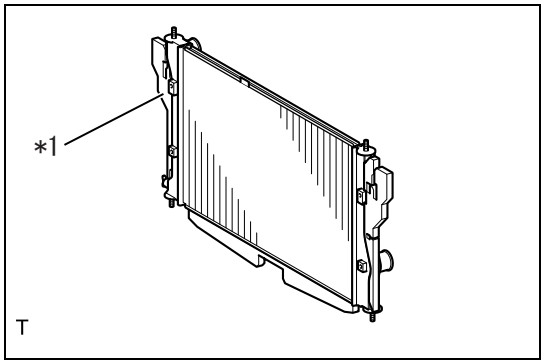

20. Radiator gasket NO. 1 removal
    (1) Remove the radiator gasket NO. 1.

Captions in illustration

*1	Radiator gasket NO. 1

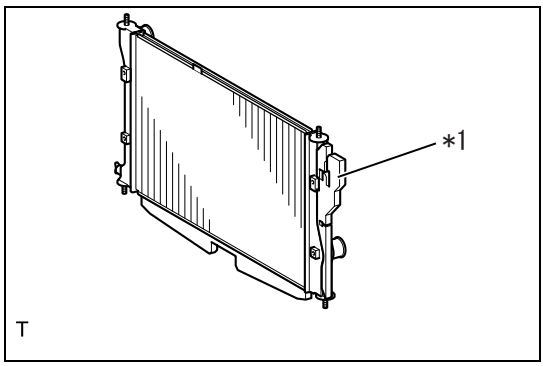

21. Radiator gasket NO. 2 removal
    (1) Remove the radiator gasket NO. 2.

Captions in illustration

*1	Radiator gasket NO. 2

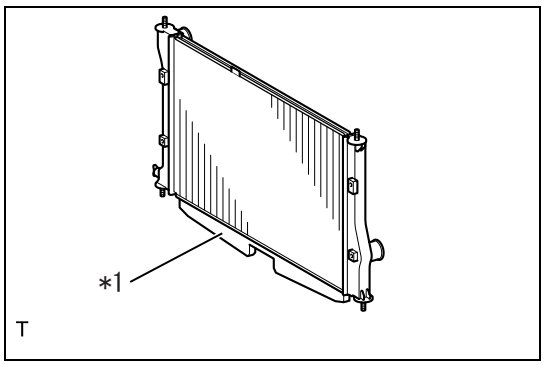

22. Radiator gasket removal (for the lower side)
    (1) Remove the radiator gasket.

Captions in illustration

*1	Radiator gasket (lower side)

Installation

1. Radiator gasket installation (for the lower side)
   (1) Install a new radiator gasket.
2. Radiator gasket NO. 2 installation
   (1) Install a new radiator gasket NO. 2.
3. Radiator gasket NO. 1 installation
   (1) Install a new radiator gasket NO. 1.

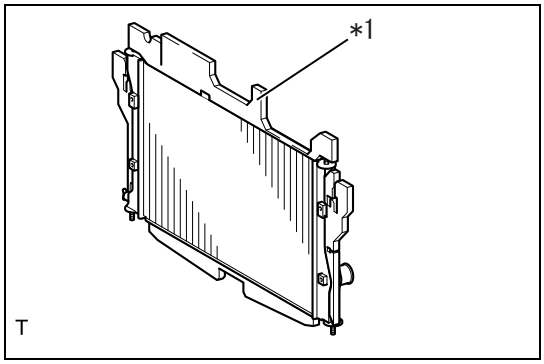

4. Radiator gasket installation (for the upper side)
   (1) Install a new radiator gasket.

Captions in illustration

*1	Radiator gasket

NOTE:
Cut the gasket at the location where the old gasket was cut when removing it.

5. Radiator inlet hose installation
   (1) Align the marks marked when removing the hose and install the radiator inlet hose to the radiator cap stay with the hose clamp.
6. Radiator outlet hose installation
   (1) Align the marks marked when removing the hose and install the radiator outlet hose to the radiator with the hose clamp.
7. Radiator hose NO. 1 installation
   (1) Align the marks marked when removing the hose and install the radiator hose NO.1 to the radiator with the hose clamp.
8. Radiator ASSY installation
   (1) Install the two radiator supports LWR.
   (2) Install the radiator ASSY to the vehicle while lifting the radiator outlet hose.
   CAUTION:
   Place a cardboard, blanket, etc. on the cooler condenser ASSY to protect the cooler condenser ASSY.
   (3) Connect the ambient sensor connector.
   (4) Install the radiator support bracket RH with the two bolts.
   Standard value:T=7.5N·m {77kgf·cm} {5.5ft·lbf}
   (5) Install the radiator support bracket LH with the two bolts.
   Standard value:T=7.5N·m {77kgf·cm} {5.5ft·lbf}
9. Fan shroud installation (Refer to CO - 44)
10. Cooler condenser ASSY connection
   (1) Connect the cooler condenser ASSY to the radiator ASSY with the five bolts.
   Standard value:T=6.0N·m {61kgf·cm} {4.4ft·lbf}
11. Radiator support SUB-ASSY installation
   (1) Install the radiator support SUB-ASSY with the six bolts.
   Standard value:T=18N·m {184kgf·cm} {13.3ft·lbf}
12. Hood lock ASSY connection (Refer to DH - 25)
13. Water filler SUB-ASSY installation
   (1) Install the water filler SUB-ASSY with the four bolts.
   Standard value:T=7.5N·m {77kgf·cm} {5.5ft·lbf}
   (2) Align the marks marked when removing the hoses and install the radiator inlet hose and radiator hose NO.1 with the two hose clamps.
   (3) Connect the radiator cap hose.
14. Radiator cover plate installation
   (1) Install the radiator cover plate with the six clips.
15. Air cleaner duct installation
   (1) Install the air cleaner duct with the two bolts.
   Standard value:T=6.0N·m {61kgf·cm} {4.4ft·lbf}
16. Radiator reservoir tank ASSY installation
   (1) Install the radiator reservoir tank ASSY with the two bolts.
   Standard value:T=7.5N·m {77kgf·cm} {5.5ft·lbf}
17. Connection of radiator outlet hose (Refer to CO - 38)
18. Air cleaner case SUB-ASSY installation
   (1) Install the air cleaner case SUB-ASSY with the three bolts.

Standard value:T=6.0N·m {61kgf·cm} {4.4ft·lbf}

(2) Install the air cleaner duct and air cleaner intake boot with the two hose clamps.
Standard value:T=2.0N·m {20kgf·cm} {1.5ft·lbf}

(3) Engage the clamp and install the wiring harness to the air cleaner cap.

(4) Connect the connector to the intake air flow meter SUB-ASSY.

(5) Connect the ventilation hose NO. 2 with the hose clip.

19. Replenishing of coolant (SUBARU Super Coolant) (Refer to CO - 16)
20. Leak check of coolant (SUBARU Super Coolant) (Refer to CO - 2)
21. Under cover front AL installation (Refer to IE - 46)
22. Installation of the front bumper cover (Refer to ET - 12)

On-vehicle inspection

1. Radiator cap SUB-ASSY check

WARNING:
To avoid the risk of burn, do not remove the radiator cap SUB-ASSY when the engine and radiator are hot. The fluid and steam may blow out due to the pressure.

CO

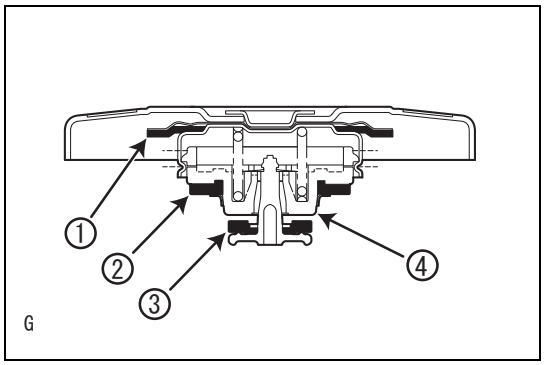

(1) Perform the visual check.

(a) When water scale or foreign matter is on the gaskets 1, 2 and 3, wash it with water.
NOTE:
Always perform the work by hands so as not to damage the gaskets 1, 2 and 3.

(b) Check the gaskets 1, 2 and 3 for deformation, cracks and expansion.

(c) Make sure that the gaskets 3 and 4 are not stuck.

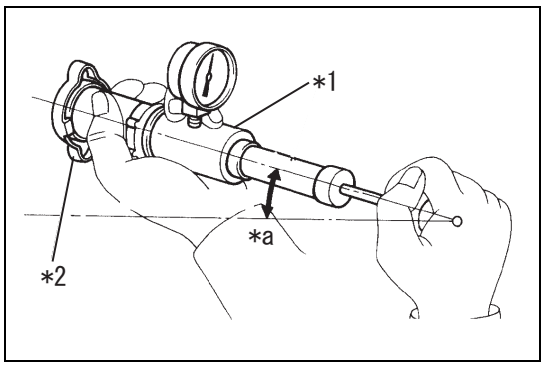

(2) Perform the function check.

(a) Apply the engine coolant to the gaskets 2 and 3 before using the radiator cap tester.

Captions in illustration

*1	Radiator cap tester
*2	Radiator cap SUB-ASSY
*a	30° or more

(b) Pump the cap tester several times and check the maximum pressure.
Pumping speed: Pump once a second
CAUTION:
When using the cap tester, perform the check by tilting it 30° or more.
NOTE:
There is a case that the radiator cap SUB-ASSY cannot keep the maximum pressure, but it is not abnormal.
Standard value: 93 to 123 kPa {0.95 to 1.25 kgf/cm^2, 14 to 18 psi}
Limit: 83 kPa {0.85 kgf/cm^2, 12 psi}
NOTE:

- The valve opening pressure of a new radiator cap SUB-ASSY is 93 to 123 kPa {0.95 to 1.25 kgf/cm^2, 14 to 18 psi}.
- If the maximum valve opening pressure does not exceed the limit value, replace the radiator cap SUB-ASSY.

Thermostat (FA20 / transmission AT)

Exploded view

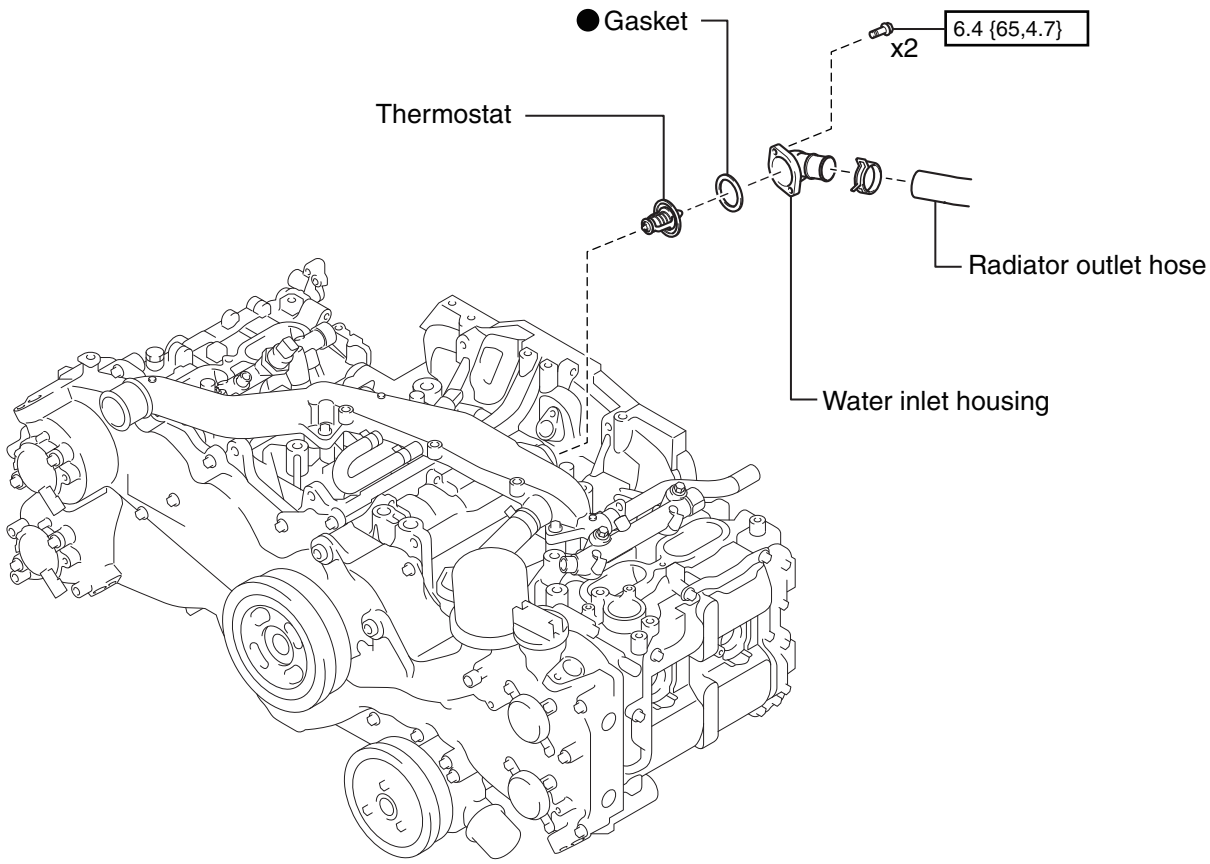

N•m {kgf•cm, ft•lbf}: Tightening torque

● Non-reusable parts

CO-03278

Removal

1. Draining of coolant (SUBARU Super Coolant) (Refer to CO - 16)
2. Removal of intake manifold (Refer to IE - 17)

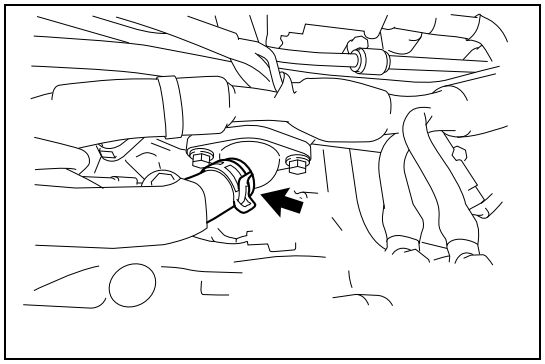

3. Radiator outlet hose disconnection
   (1) Move the hose clamp and disconnect the radiator outlet hose.

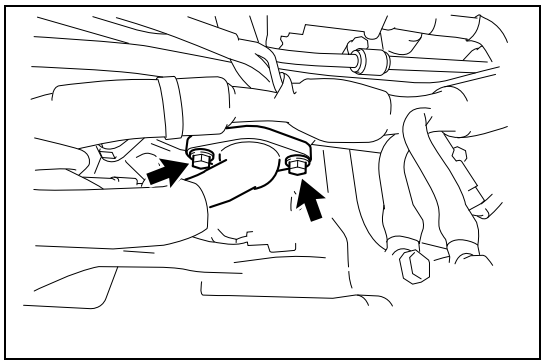

4. Water inlet housing removal
   (1) Remove the two bolts and remove the water inlet housing.

5. Thermostat removal
   (1) Remove the thermostat.
   (2) Remove the gasket from the thermostat.

Inspection

1. Thermostat check
   (1) Check that the valve is fully closed when the thermostat is at 45°C {113°F} or less.
   NOTE:
   Replace the thermostat if the valve is not fully closed.

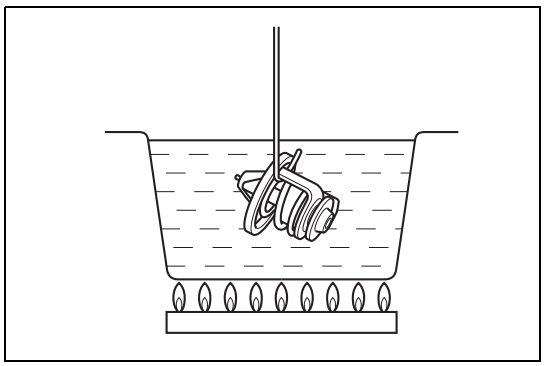

   (2) Immerse the thermostat in water and heat it gradually.
   NOTE:
   Hold the thermostat with a wire or the like to avoid contacting with container bottom.
   (3) Check the temperature when the valve starts to open.
   Standard value: 48 to 52°C {118 to 126°F}
   NOTE:
   Replace the thermostat if the temperature when the valve opens is outside the standard range.

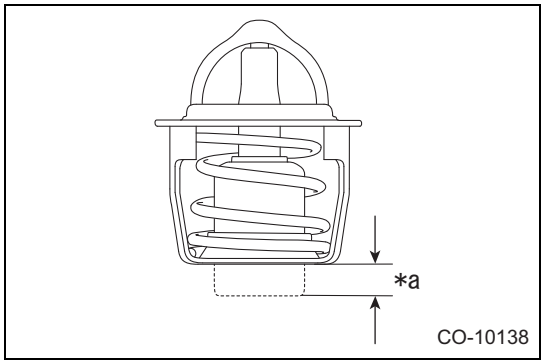

(4) Check the valve lift.

Captions in illustration

*a	Lift

Standard value: Lift 6.0mm {0.236in} or more
Full open temperature 63°C {145°F}

NOTE:
Replace the thermostat if the valve lift is outside the standard range.

Installation

1. Thermostat installation
   (1) Install a new gasket to the thermostat.

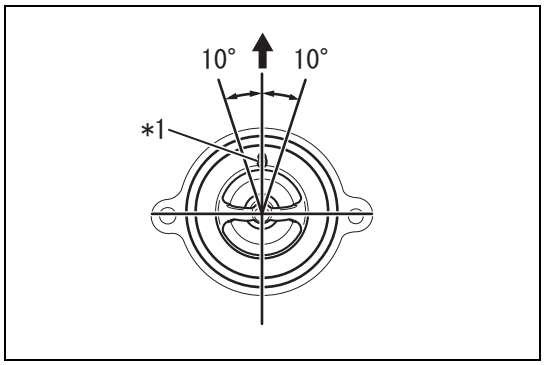

(2) Install the thermostat to the thermostat cover with the jiggle valve facing upward as shown in the figure.

Captions in illustration

*1	Jiggle valve
➡	Upper side of vehicle

NOTE:
The direction of jiggle valve must be within 10° from the upright.

2. Water inlet housing installation
   (1) Install the thermostat cover with the two bolts.
   Standard value:T=6.4N·m {65kgf·cm} {4.7ft·lbf}
3. Radiator outlet hose connection
   (1) Connect the water hose to the thermostat cover and secure it with the hose clamp.
4. Installation of intake manifold (Refer to IE - 28)
5. Replenishing of coolant (SUBARU Super Coolant) (Refer to CO - 16)
6. Leak check of coolant (SUBARU Super Coolant) (Refer to CO - 2)

Thermostat (FA20 / for engine coolant)

Exploded view

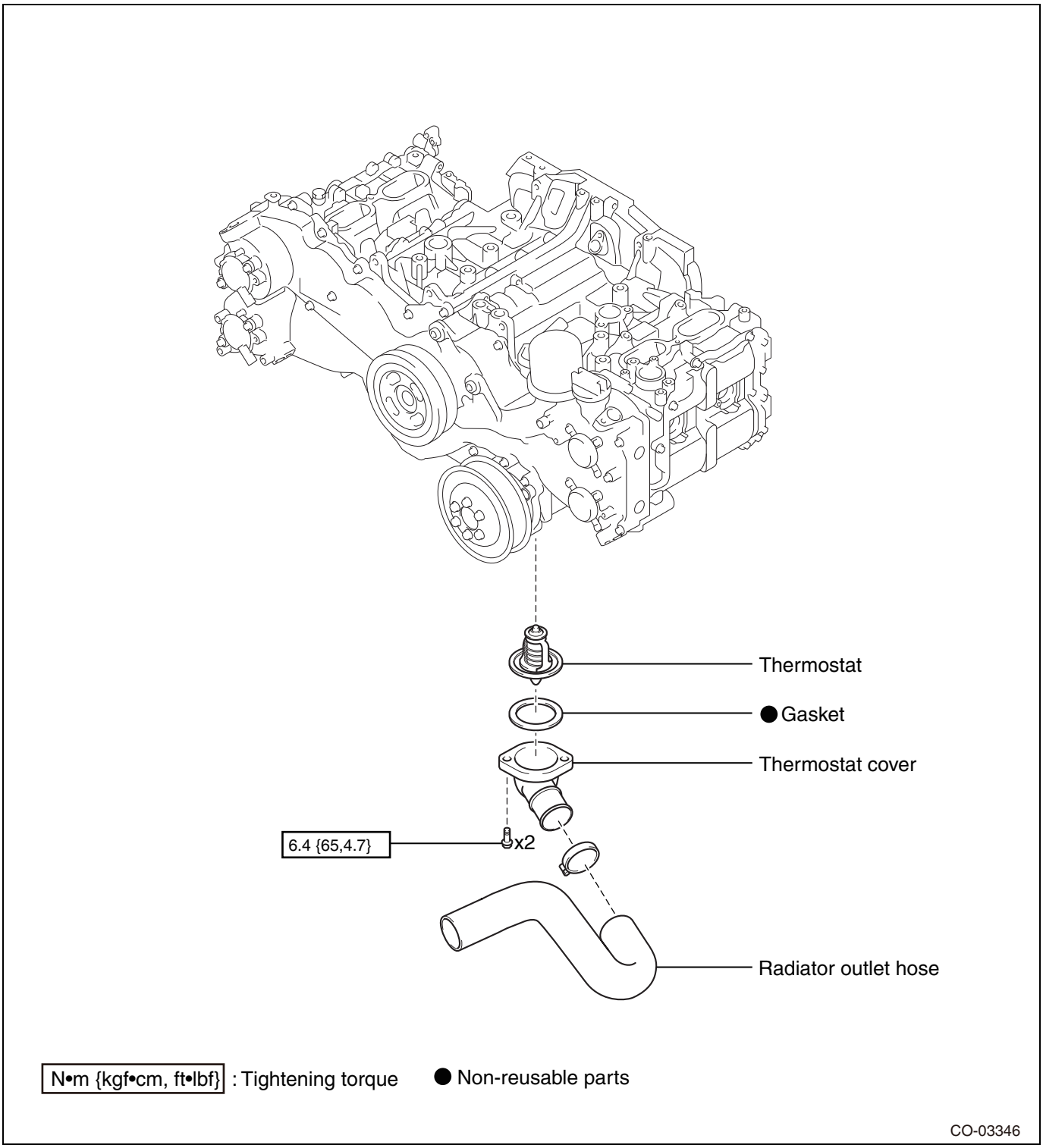

Removal

1. Removal of exhaust manifold (Refer to IE - 35)
2. Draining of coolant (SUBARU Super Coolant) (Refer to CO - 16)

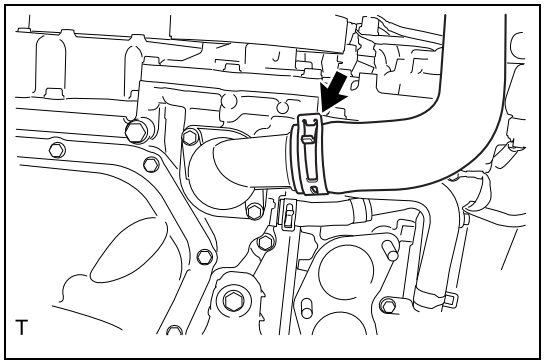

3. Radiator outlet hose disconnection
   (1) Move the hose clamp and disconnect the radiator outlet hose.
   NOTE:
   Since the hose has its proper installation position, mark the alignment mark before removing it.

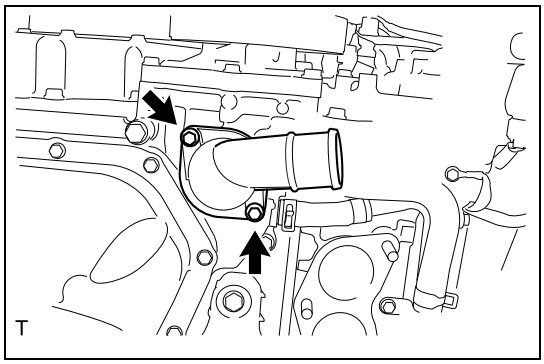

4. Thermostat cover removal
   (1) Remove the two bolts and remove the thermostat cover.

5. Thermostat removal
   (1) Remove the thermostat.
   (2) Remove the gasket from the thermostat.

Inspection

1. Thermostat check
   (1) Check that the valve is fully closed when the thermostat is at 83°C {181°F} or less.
   NOTE:
   Replace the thermostat if the valve is not fully closed.

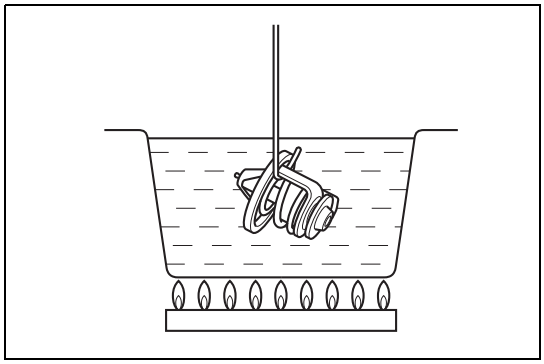

   (2) Immerse the thermostat in water and heat it gradually.
   NOTE:
   Hold the thermostat with a wire or the like to avoid contacting with container bottom.

   (3) Check the temperature when the valve starts to open.
   Standard value: 86 to 90°C {187 to 194°F}
   NOTE:
   Replace the thermostat if the temperature when the valve opens is outside the standard range.

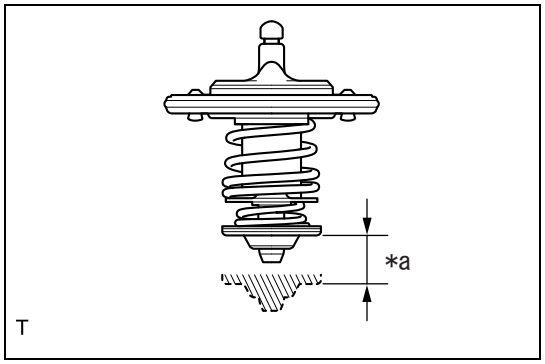

(4) Check the valve lift.

Captions in illustration

*a	Lift

Standard value: Lift 8mm {0.315 in} or more
Full open temperature 95°C {203°F}

NOTE:
Replace the thermostat if the valve lift is outside the standard range.

Installation

1. Thermostat installation
   (1) Install a new gasket to the thermostat.
   (2) Install the thermostat to the thermostat cover.
2. Thermostat cover installation
   (1) Install the thermostat cover with the two bolts.
   Standard value:T=6.4N·m {65kgf·cm} {4.7ft·lbf}
3. Radiator outlet hose connection
   (1) Align the marks marked when removing the hose, install the radiator outlet hose to the thermostat cover and secure the hose with the hose clamp.
4. Installation of exhaust manifold (Refer to IE - 36)
5. Replenishing of coolant (SUBARU Super Coolant) (Refer to CO - 16)
6. Leak check of coolant (SUBARU Super Coolant) (Refer to CO - 2)

Cooling fan motor (FA20)

Exploded view

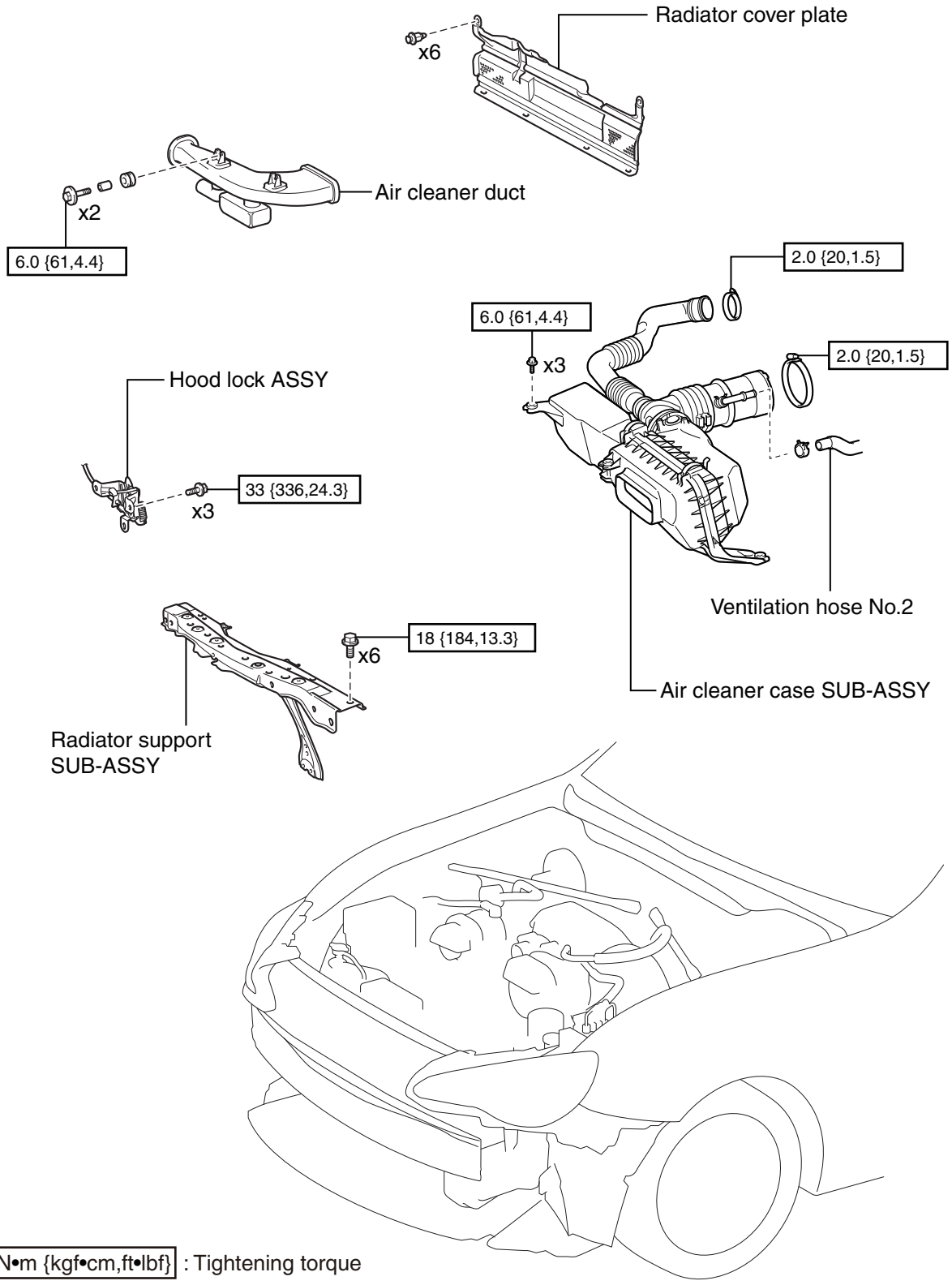

N•m {kgf•cm,ft•lbf} : Tightening torque

CO-03078

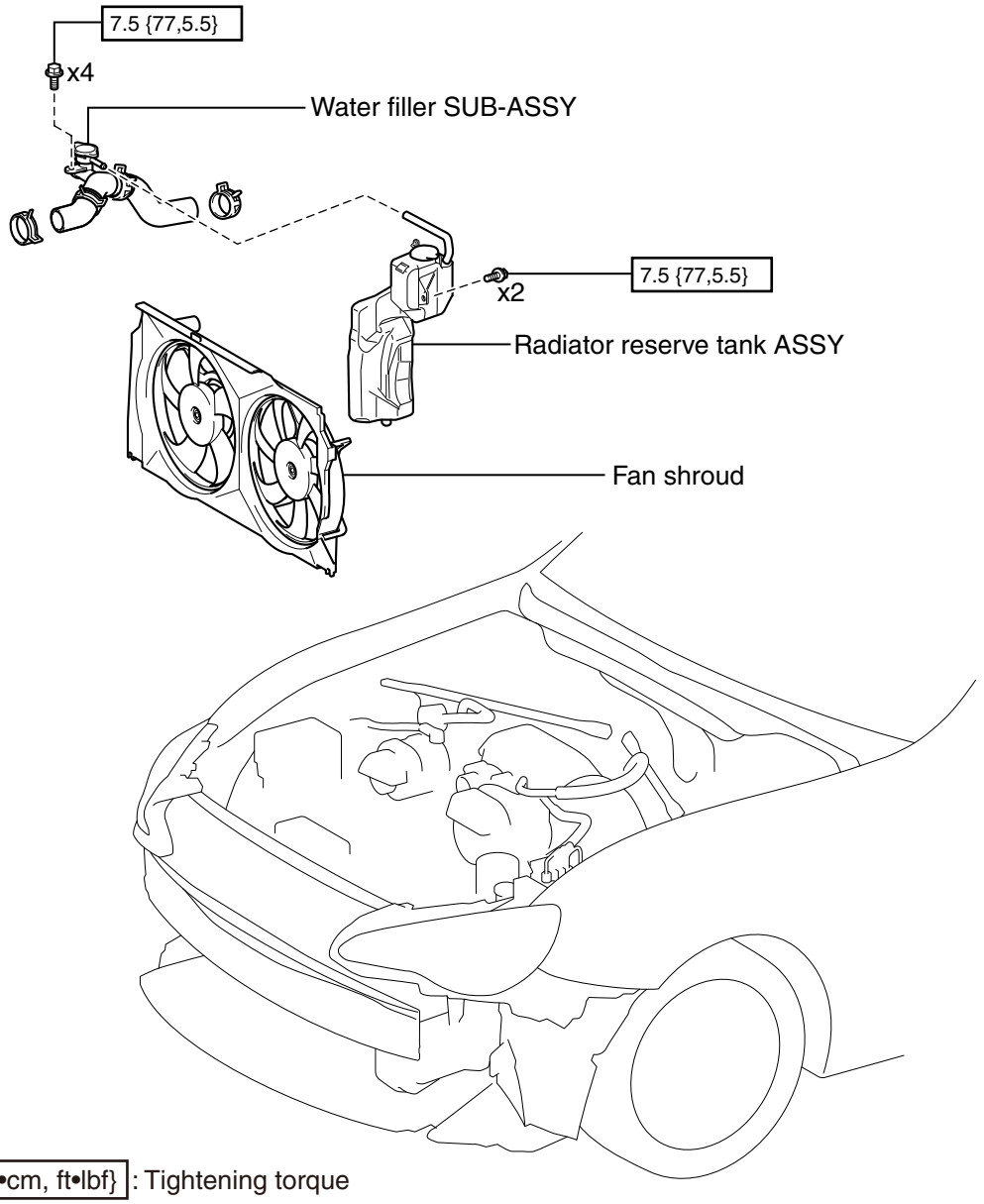

CO

N•m {kgf•cm, ft•lbf} : Tightening torque

CO-03070

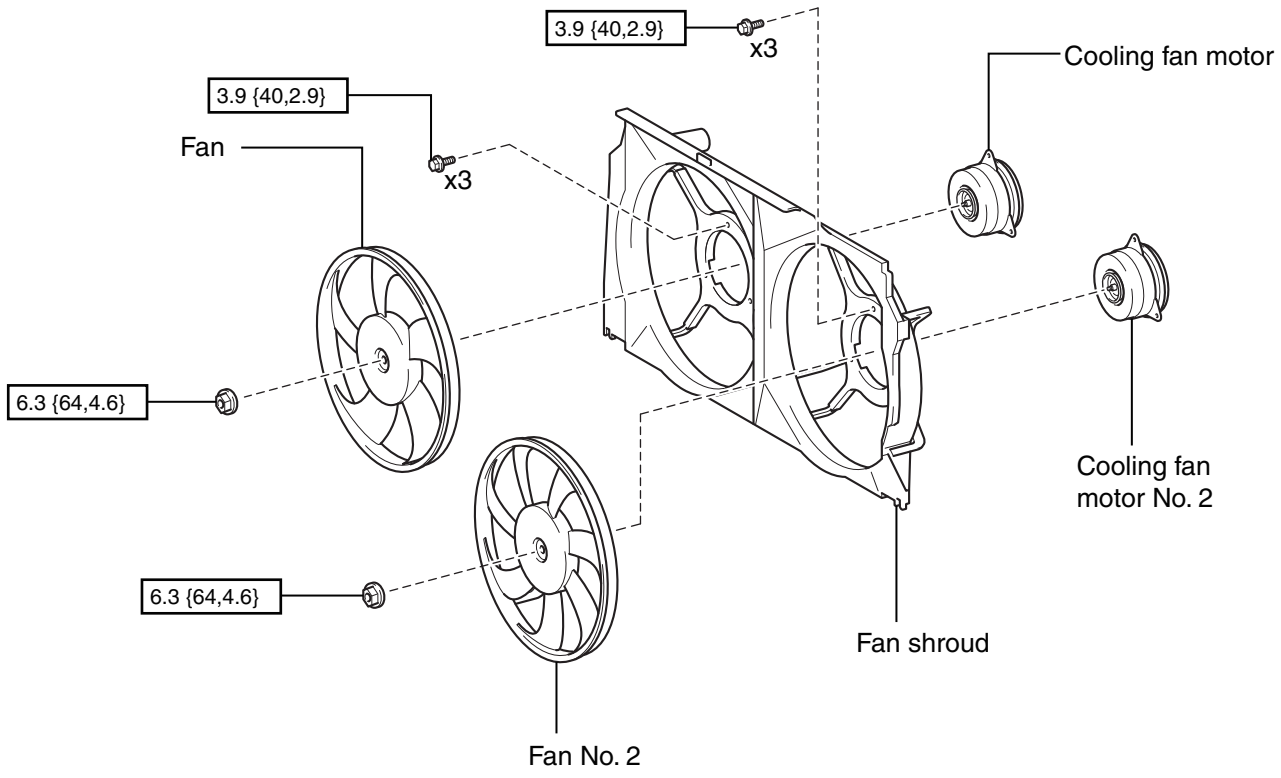

Removal

1. Removal of air cleaner case SUB-ASSY (Refer to CO - 24)
2. Removal of the front bumper cover (Refer to ET - 4)
3. Removal of air cleaner duct (Refer to CO - 25)
4. Removal of radiator cover plate (Refer to CO - 26)
5. Removal of radiator reservoir tank ASSY (Refer to CO - 25)

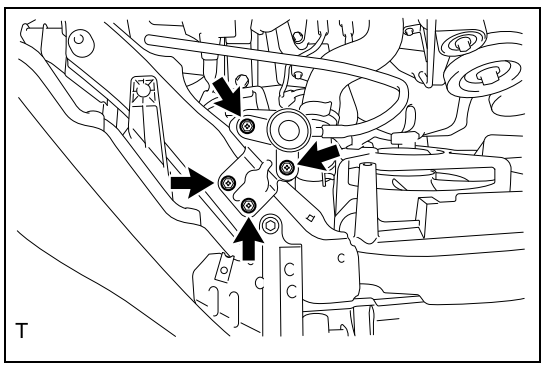

6. Removal of water filler SUB-ASSY
   (1) Remove the four bolts and disconnect the water filler SUB-ASSY.
7. Disconnection of hood lock ASSY (Refer to DH - 24)
8. Removal of radiator support SUB-ASSY (Refer to CO - 26)
9. Fan shroud removal
   (1) Remove the two clamps.

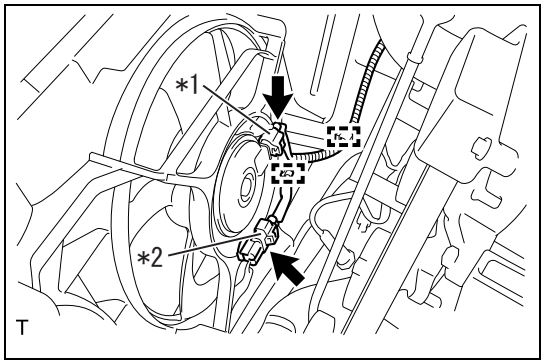

(2) Disconnect the connector for cooling fan and connector for cooling fan NO. 2.

Captions in illustration

*1	Connector for cooling fan
*2	Connector for cooling fan NO. 2

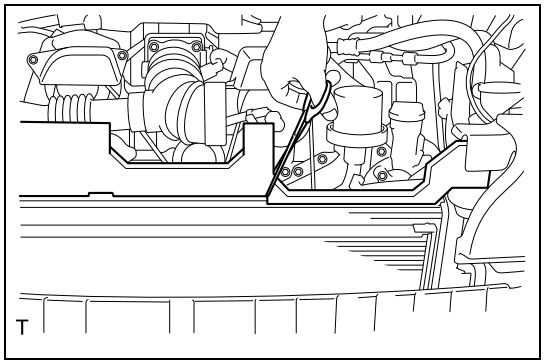

(3) Put a mark on the sponge at the upper side of fan shroud and cut the sponge using scissors etc.

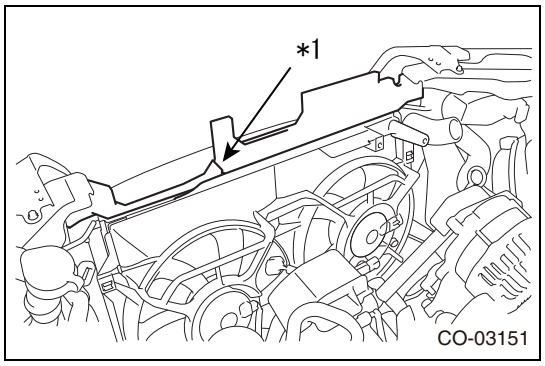

NOTE:
Cut on the line from the corner of radiator gasket to the edge of fan shroud.

Captions in illustration

*1	Cut line

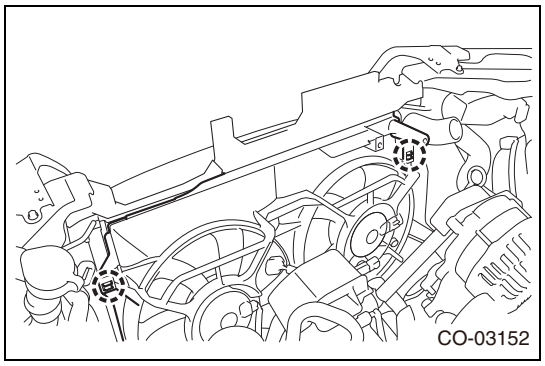

(4) Release the two claws and disconnect the fan shroud from the radiator ASSY.
NOTE:
Insert a cardboard, blanket, etc. between the radiator ASSY and fan shroud to protect the radiator ASSY.

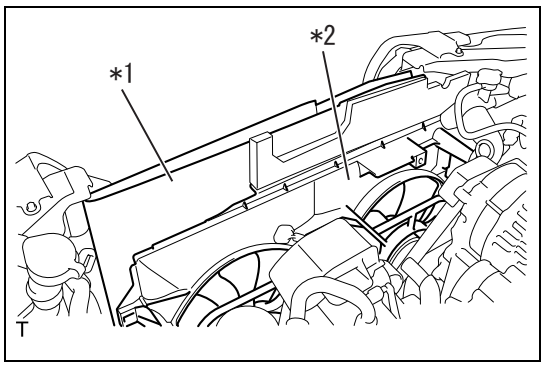

Captions in illustration

*1	Cardboard or blanket
*2	Fan shroud

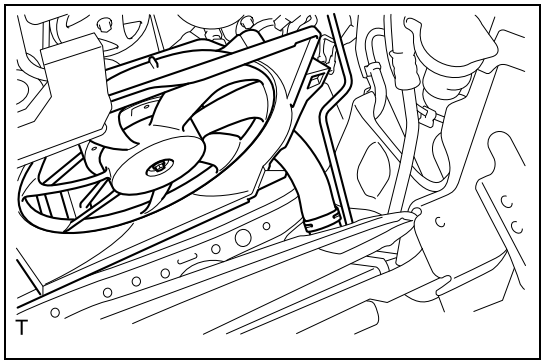

(5) Remove the fan shroud.
CAUTION:
- Be careful not to damage the radiator outlet hose, discharge hose and A/C tube & accessory ASSY.
- Be careful not to damage the radiator inlet hose, radiator hose NO. 1 and water filler SUB-ASSY.

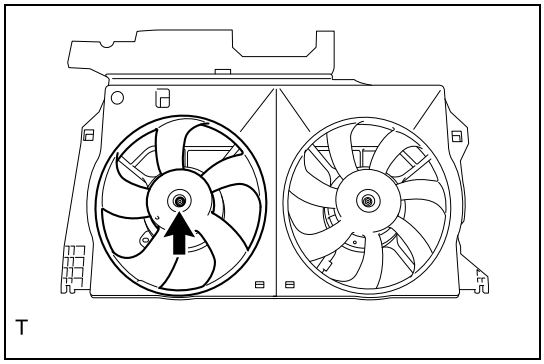

10. Fan removal
(1) Remove the nut and remove the fan.

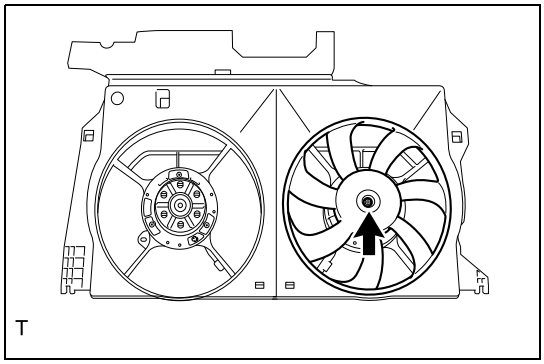

11. Fan NO. 2 removal
(1) Remove the nut and remove the fan NO. 2.

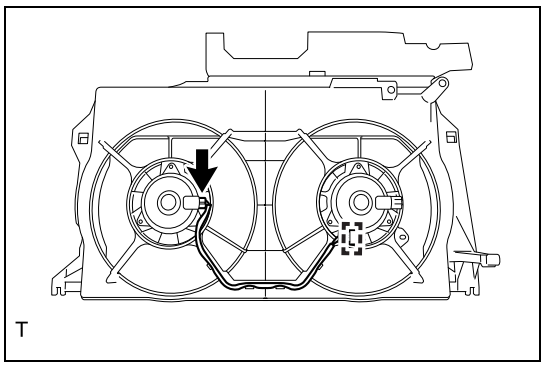

12. Cooling fan motor removal
(1) Release the clamp of connector on the cooling fan side and disconnect the wiring harness from the cooling fan motor NO. 2.

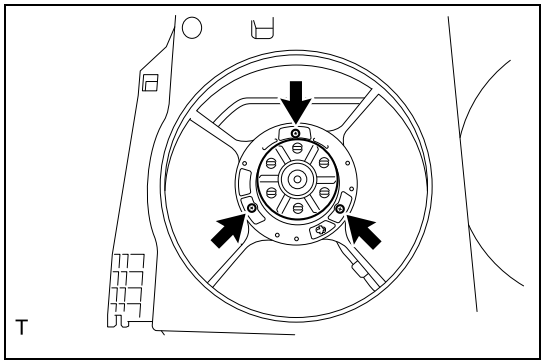

(2) Remove the three screws and remove the cooling fan motor.

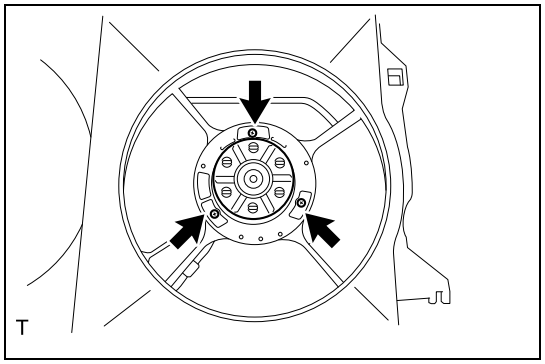

13. Cooling fan motor NO. 2 removal
    (1) Remove the three screws and remove the cooling fan motor NO. 2.

Installation

1. Cooling fan motor NO. 2 installation
   (1) Remove the three screws and install the cooling fan motor NO. 2.
   Standard value:T=3.9N·m {40kgf·cm} {2.9ft·lbf}
2. Cooling fan motor installation
   (1) Install the cooling fan motor with the three screws.
   Standard value:T=3.9N·m {40kgf·cm} {2.9ft·lbf}
   (2) Connect the wiring harness to the cooling fan motor.
   (3) Engage the clamp of connector on the cooling fan motor NO. 2 side to the fan shroud.
3. Fan NO. 2 installation
   (1) Install the fan NO. 2 with the nut.
   Standard value:T=6.3N·m {64kgf·cm} {4.6 ft·lbf}
4. Fan installation
   (1) Install the fan with the nut.
   Standard value:T=6.3N·m {64kgf·cm} {4.6 ft·lbf}
5. Fan shroud installation
   NOTE:
   - Insert a cardboard, blanket, etc. between the radiator ASSY and fan shroud to protect the radiator ASSY.
   - When installing a new fan shroud, put a new radiator gasket (upper side) and cut the radiator gasket (upper side) at the location where the old gasket was cut when removing it.

   (1) Insert the fitting area at the lower part of fan shroud to the fitting area at the lower part of radiator ASSY.
   CAUTION:
   - Be careful not to damage the radiator outlet hose, discharge hose and A/C tube & accessory ASSY.
   - Be careful not to damage the radiator inlet hose, radiator hose NO. 1 and water filler SUB-ASSY.

   (2) Engage the two claws and install the fan shroud to the radiator ASSY.
   (3) Engage the two clamps.
   (4) Connect the connector for cooling fan and connector for cooling fan NO. 2.
6. Radiator support SUB-ASSY installation (Refer to CO - 31)
7. Radiator cover plate installation (Refer to CO - 31)
8. Air cleaner duct installation (Refer to CO - 31)
9. Hood lock ASSY connection (Refer to DH - 25)
10. Water filler SUB-ASSY installation
    (1) Install the radiator cap stay with the four bolts.
    Standard value:T=7.5N·m {77kgf·cm} {5.5ft·lbf}
11. Radiator reservoir tank ASSY installation (Refer to CO - 31)
12. Installation of the front bumper cover (Refer to ET - 12)
13. Installation of air cleaner case SUB-ASSY (Refer to CO - 31)

On-vehicle inspection

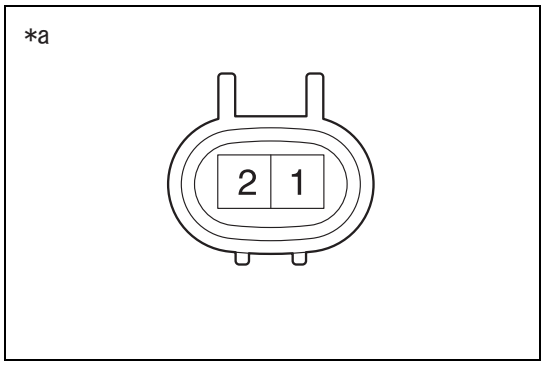

1. Cooling fan motor check
   (1) Make sure that the motor rotates smoothly when the battery voltage is applied to the connectors.

Captions in illustration

*a	Connector not connected (Cooling fan motor)

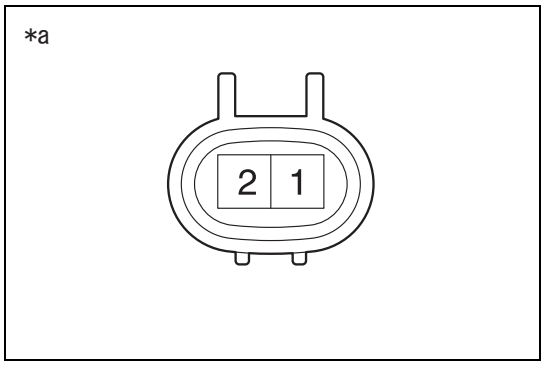

   (2) Measure the current when the motor is rotating.
   Current value

Inspection terminals	Inspection conditions	Standard value
1 - 2	20°C {68°F}, 12 V	7.4 to 11.4 A

Captions in illustration

*a	Connector not connected (Cooling fan motor)

CO

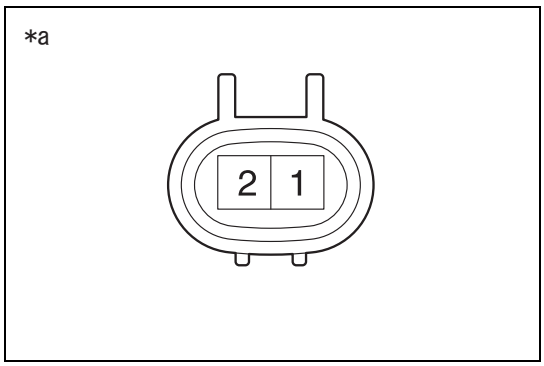

2. Cooling fan motor NO. 2 check
   (1) Make sure that the motor rotates smoothly when the battery voltage is applied to the connectors.

Captions in illustration

*a	Connector not connected (Cooling fan motor NO. 2)

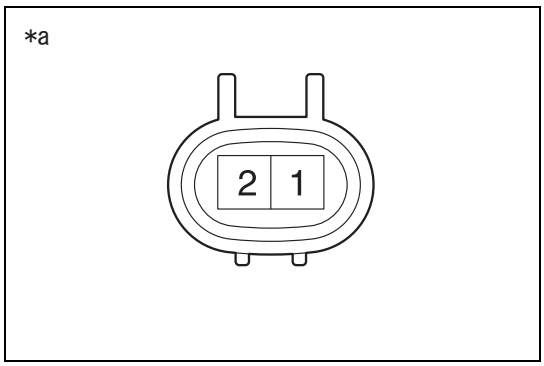

   (2) Measure the current when the motor is rotating.
   Current value

Inspection terminals	Inspection conditions	Standard value
1 - 2	20°C {68°F}, 12 V	7.4 to 11.4 A

Captions in illustration

*a	Connector not connected (Cooling fan motor NO. 2)

Relay (FA20)

Unit inspection

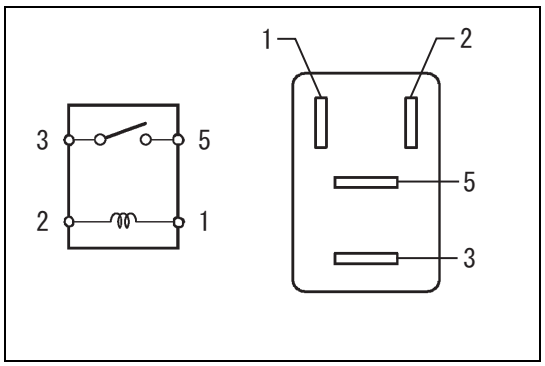

1. Cooling fan relay check
   (1) Check the resistance between connector terminals.
   Resistance

Inspection terminals	Inspection conditions	Standard value
3 - 5	When the battery voltage is not applied to the terminal 1 and terminal 2:	10 k Ωor more
3 - 5	When the battery voltage is applied to the terminal 1 and terminal 2:	Less than 1 Ω

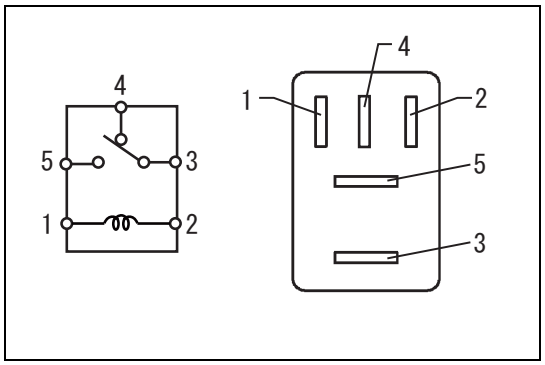

2. Cooling fan relay NO. 2 check
   (1) Check the resistance between connector terminals.
   Resistance

Inspection terminals	Inspection conditions	Standard value
3 - 4	When the battery voltage is not applied to the terminal 1 and terminal 2:	Less than 1 Ω
3 - 4	When the battery voltage is applied to the terminal 1 and terminal 2:	10 k Ωor more
3 - 5	When the battery voltage is not applied to the terminal 1 and terminal 2:	10 k Ωor more
3 - 5	When the battery voltage is applied to the terminal 1 and terminal 2:	Less than 1 Ω

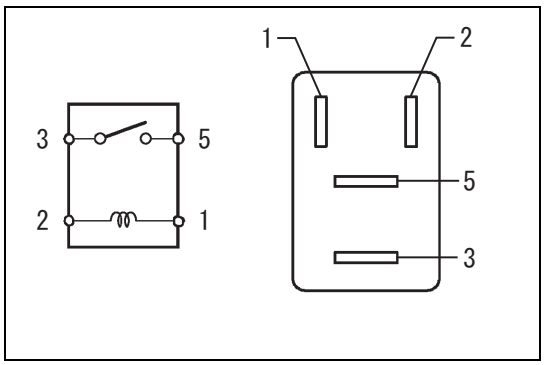

3. Cooling fan relay NO. 3 check
   (1) Check the resistance between connector terminals.
   Resistance

Inspection terminals	Inspection conditions	Standard value
3 - 5	When the battery voltage is not applied to the terminal 1 and terminal 2:	10 k Ωor more
3 - 5	When the battery voltage is applied to the terminal 1 and terminal 2:	Less than 1 Ω

Lubrication

Lubrication system (FA20)
Function inspection LU-2

Oil & oil filter (FA20)
Exploded view LU-4
Replacement LU-4

Engine oil pressure switch ASSY (FA20)
Exploded view LU-7
Removal LU-7
Installation LU-8

Oil pump ASSY (FA20)
Exploded view LU-9
Removal LU-13
Disassembly LU-18
Assembly LU-21
Installation LU-25

Lubrication system (FA20)

Function inspection

1. Engine oil level check
   (1) Park the vehicle on a level surface.
   (2) Remove the oil level gauge and wipe away the oil.
   (3) Reinsert the oil level gauge all the way. Be sure that the oil level gauge is correctly inserted and properly orientated.
   (4) Pull out the oil level gauge again, and check both sides of the oil level gauge. Use a lower side to determine the engine oil level. If the engine oil level is below the L mark, check the engine for oil leakage and refill the oil to bring the level up to the F mark.
   (5) Start the engine to circulate the oil in the engine.

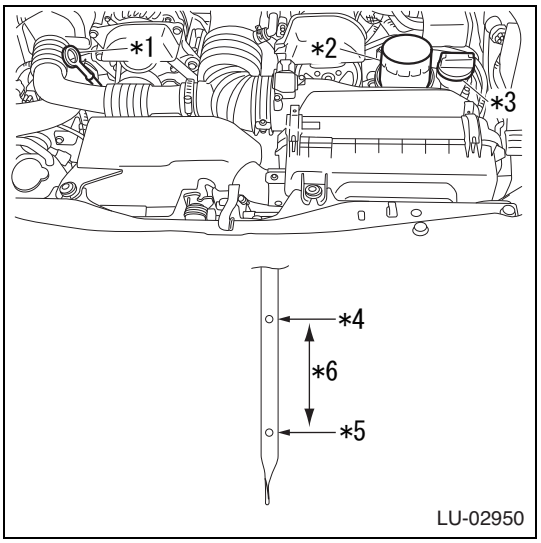

   (6) Five minutes after stopping the engine, check that the engine oil level is between the L and F marks of oil level gauge. If the oil level is low, check for oil leakage and refill the oil up to the F mark.
   NOTE:
   - To prevent overfilling of the engine oil, do not refill the oil above the F mark when the engine is cold.
   - As the oil level gauge is used for daily maintenance, the F and L marks are set assuming that the engine is cold.

Captions in illustration

*1	Oil level gauge
*2	Oil filter
*3	Oil filler cap
*4	F mark
*5	L mark
*6	Approx. 1.0 L (1.1 US qt, 0.9 Imp qt)

2. Engine oil quality check
   (1) Check the oil for degradation, mixture of moisture, discoloration and dilution. Replace the oil when its quality has deteriorated clearly.
3. Oil pressure check
   CAUTION:
   Wash the equipment and hoses before and after measurement.
   (1) Remove the engine oil pressure switch ASSY. (Refer to LU - 7)

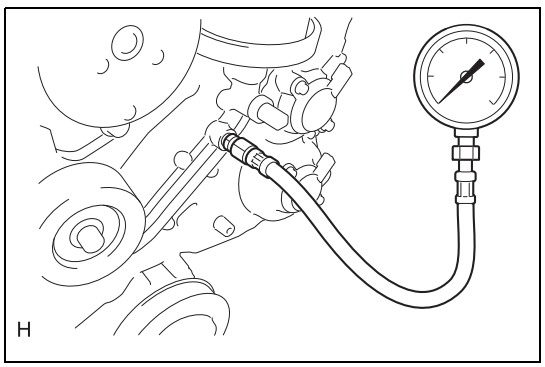

   (2) Install the oil pressure gauge using the adapter.
   (3) Install the air cleaner case SUB-ASSY. (Refer to EM - 8)
   (4) Warm up the engine.
   (5) Measure the oil pressure.

Standard value:

Engine Speed	Oil temperature	Oil pressure
During idling	80°C {176°F}	50 kPa {0.5 kgf/cm^2, 7.3 psi} or more
6,000 r/min	80°C {176°F}	350 kPa {3.6 kgf/cm^2, 51 psi} or more

   (6) Remove the air cleaner case SUB-ASSY. (Refer to EM - 5)

(7) Remove the oil pressure gauge.
(8) Install the engine oil pressure switch ASSY (Refer to LU - 8)

Oil & oil filter (FA20)

Exploded view

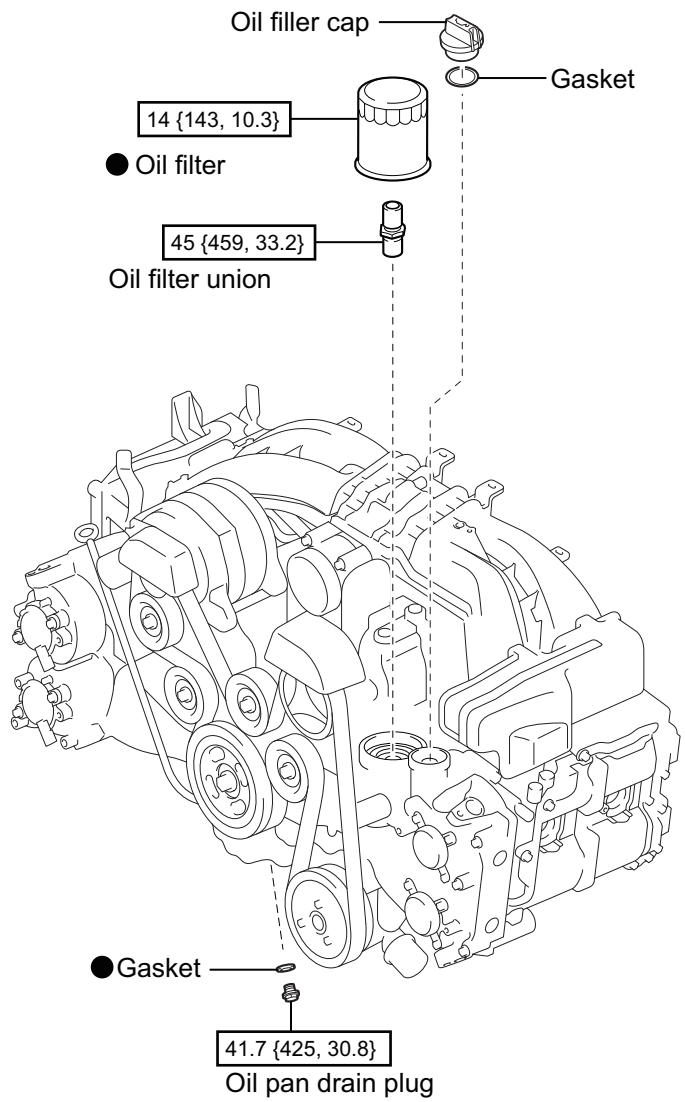

N*m {kgf*cm, ft*lbf}: Tightening torque

● Non-reusable part

LU-10118

Replacement

1. Oil filter removal
   (1) Remove the dirt and foreign matters on the engine side installing surface.

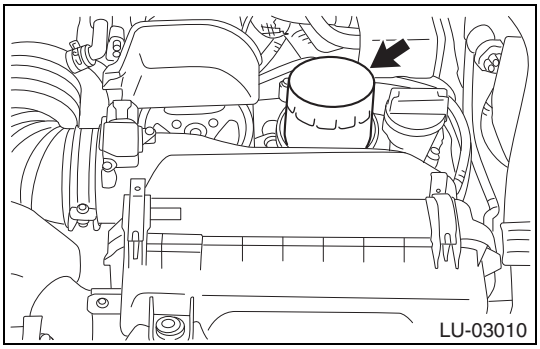

(2) Remove the oil filter using the SST.
SST 18332AA020

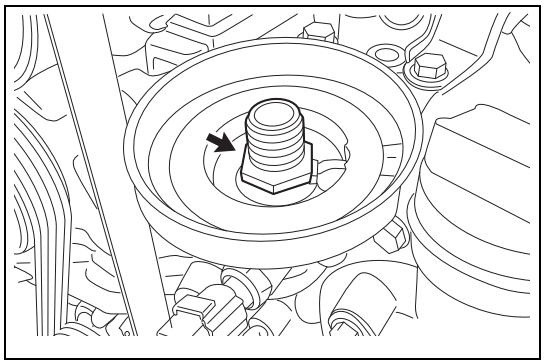

2. Oil filter union removal
(1) Remove the oil filter union.
NOTE:
Perform this operation as necessary.

3. Oil filter union installation
(1) Install the oil filter union.
Standard value:T=45N·m {459kgf·cm} {33.2ft·lbf}
NOTE:
Perform this operation as necessary.

4. Oil filter installation
(1) Remove the dirt and foreign matters on the engine side installing surface and inner side.
(2) Apply a thin coat of engine oil to the seal rubber of a new oil filter.
(3) Tighten the oil filter by hand.
CAUTION:
Be careful not to damage the seal rubber of oil filter.
(4) Tighten the oil filter using the SST.
SST 18332AA020
Standard value:T=14N·m {143kgf·cm} {10.3ft·lbf}
CAUTION:
- When extending the overall tool length by combining a torque wrench with the SST during tightening, tightening to the point where the value on the torque wrench reaches the specified tightening torque will cause the actual tightening torque to be excessive.
- This manual only indicates the specified tightening torque. If using an SST, it is necessary to use the following formula to calculate the proper torque wrench reading.

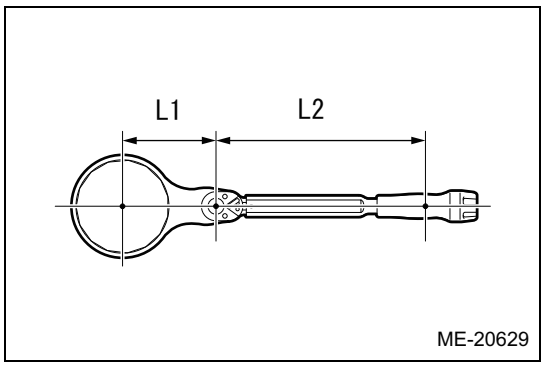

- Formula T'=T×L2/(L1+L2)

T'	Torque wrench reading [N·m {kgf·cm}]
T	14N·m {143kgf·cm}{10.3ft·lbf}
L1	0.080m {3.150 in}
L2	Torque wrench effective length (m {in})

NOTE:
- This torque value is valid when the SST and torque wrench are aligned on a line.
- Attach the SST and torque wrench so that they are aligned on a line.

5. Engine oil refill
(1) Fill the engine oil.
(2) Install the oil filler cap.

6. Engine oil level check (Refer to LU - 2)
7. Engine oil leakage check
   (1) Start the engine and make sure that there is no oil leakage at the connected and tightened portions where the work has done.

Engine oil pressure switch ASSY (FA20)

Exploded view

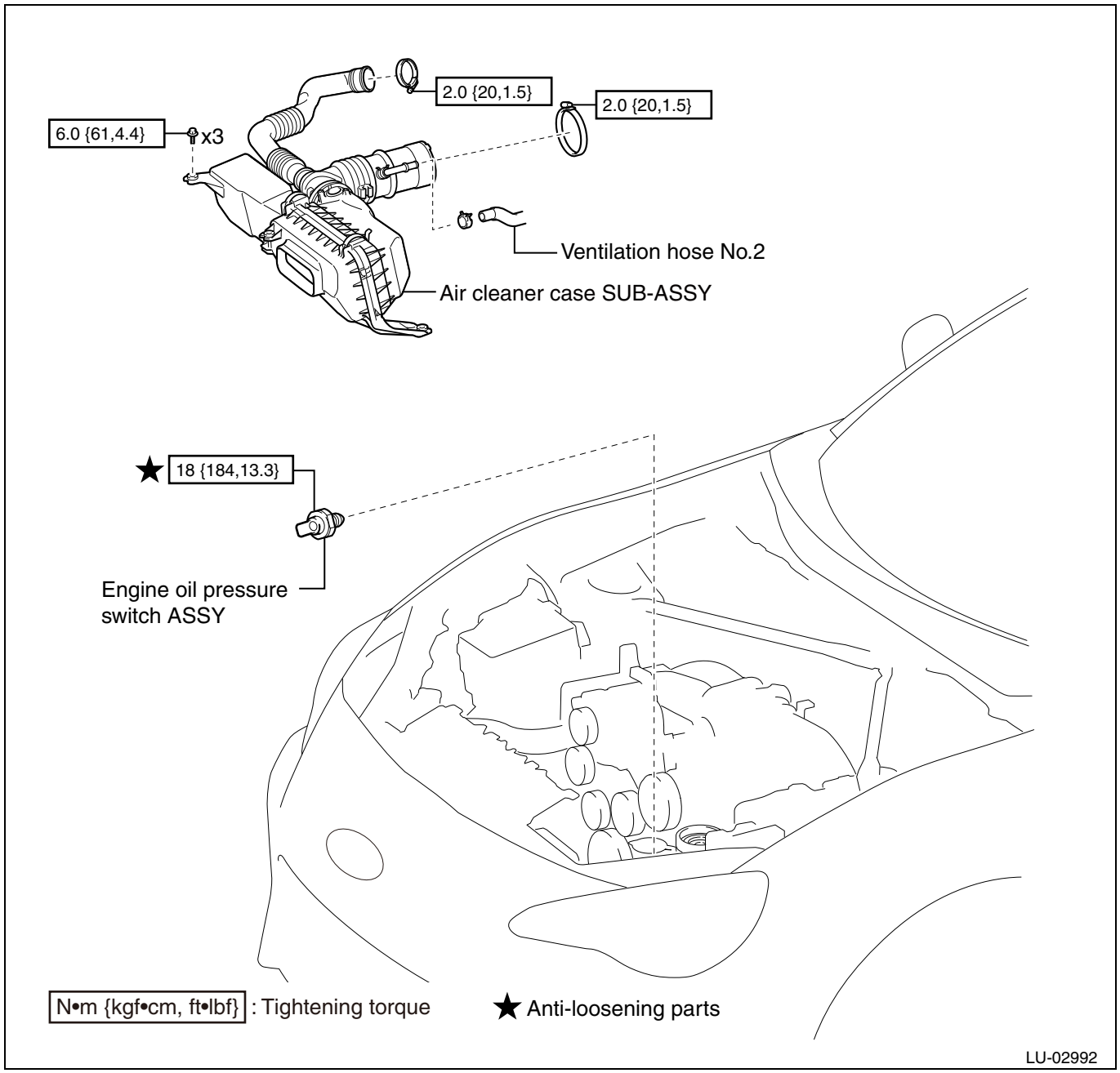

Removal

1. Disconnection of the battery ground terminal (Refer to IN - 6)
2. Removal of air cleaner case SUB-ASSY (Refer to EM - 5)
3. Engine oil pressure switch ASSY removal
   (1) Disconnect the connector of engine oil pressure switch ASSY.

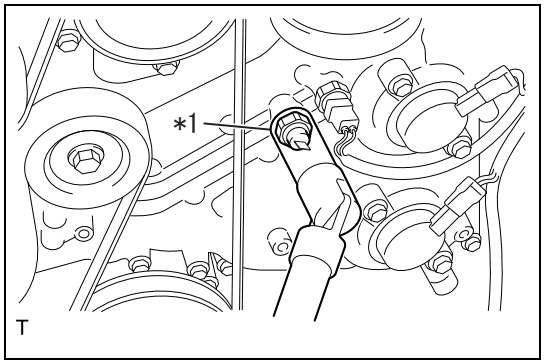

(2) Remove the engine oil pressure switch ASSY.

Captions in illustration

*1	Deep socket wrench

CAUTION:
Catch the engine oil using cloth and the like to prevent it from splashing.

Installation

1. Engine oil pressure switch ASSY installation
   (1) Degrease the threaded portion of engine oil pressure switch ASSY.

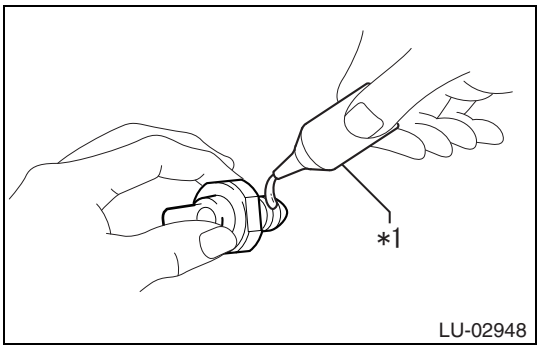

(2) Apply THREE BOND 1324 to the threaded portion.
CAUTION:
Do not apply THREE BOND 1324 to the oil hole.

Captions in illustration

*1	THREE BOND 1324

LU

   (3) Install the engine oil pressure switch ASSY.
   Standard value:T=18N·m {184kgf·cm} {13.3ft·lbf}
   CAUTION:
   Do not start the engine within 1 hour after the assembly.
   (4) Connect the connector of oil pressure switch.
2. Installation of air cleaner case SUB-ASSY (Refer to EM - 8)
3. Connection of the battery ground terminal
   Standard value:T=6.0N·m {61kgf·cm} {4.4ft·lbf}
4. Engine oil leakage check (Refer to LU - 6)

Oil pump ASSY (FA20)

Exploded view

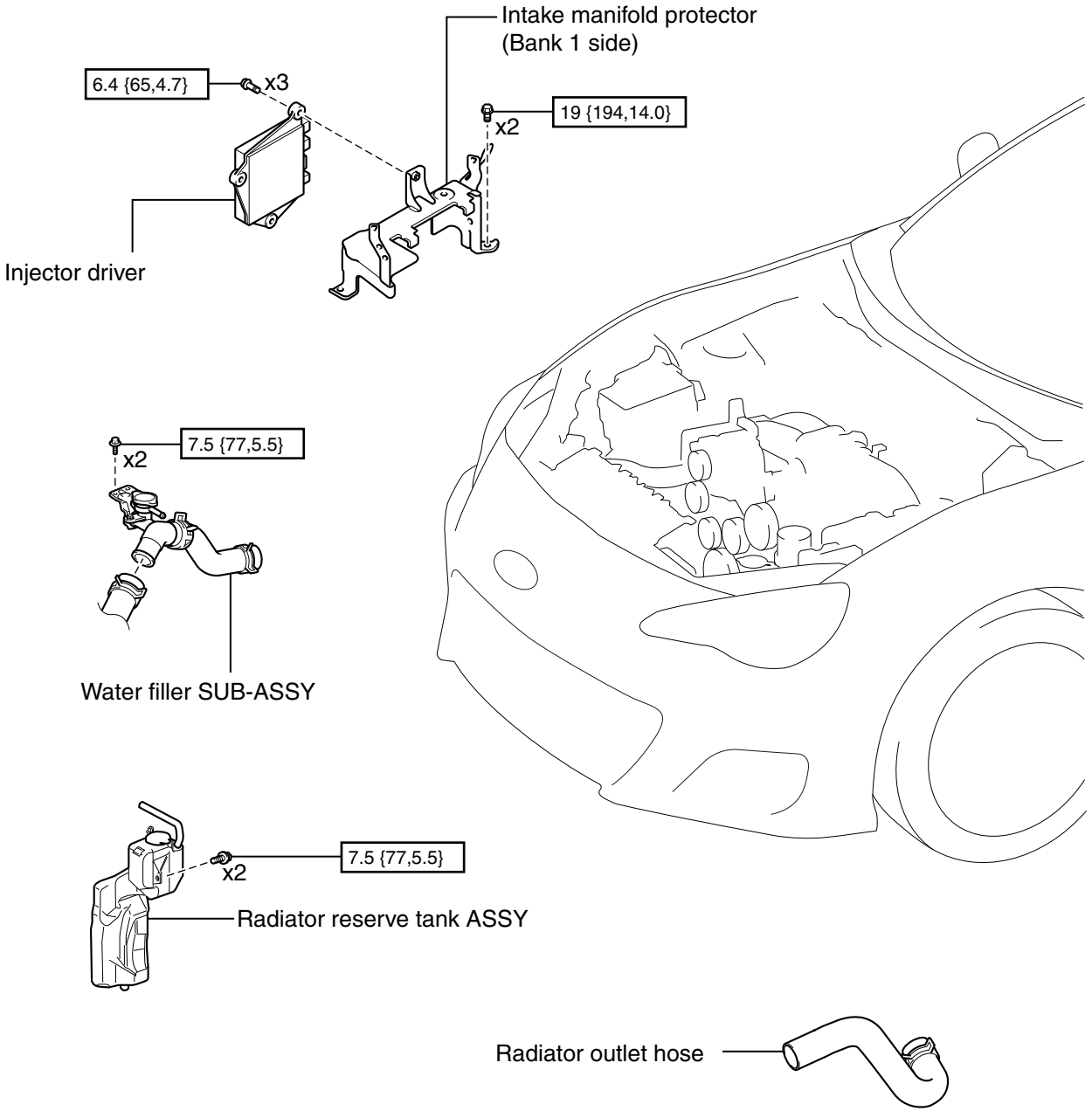

N•m {kgf•cm, ft•lbf} : Tightening torque

LU-02993

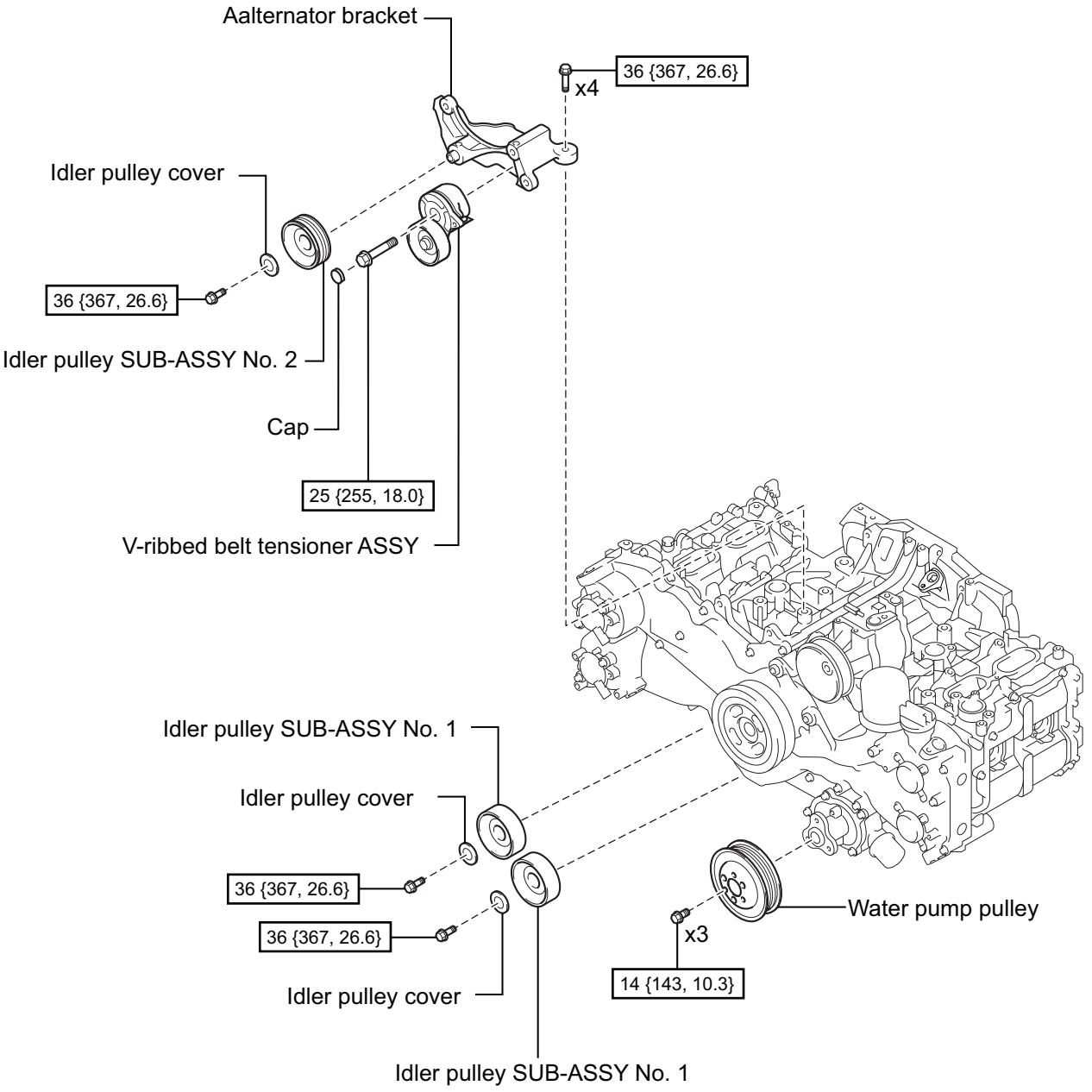

N*m {kgf*cm, ft*lbf}: Tightening torque

LU-10104

LU

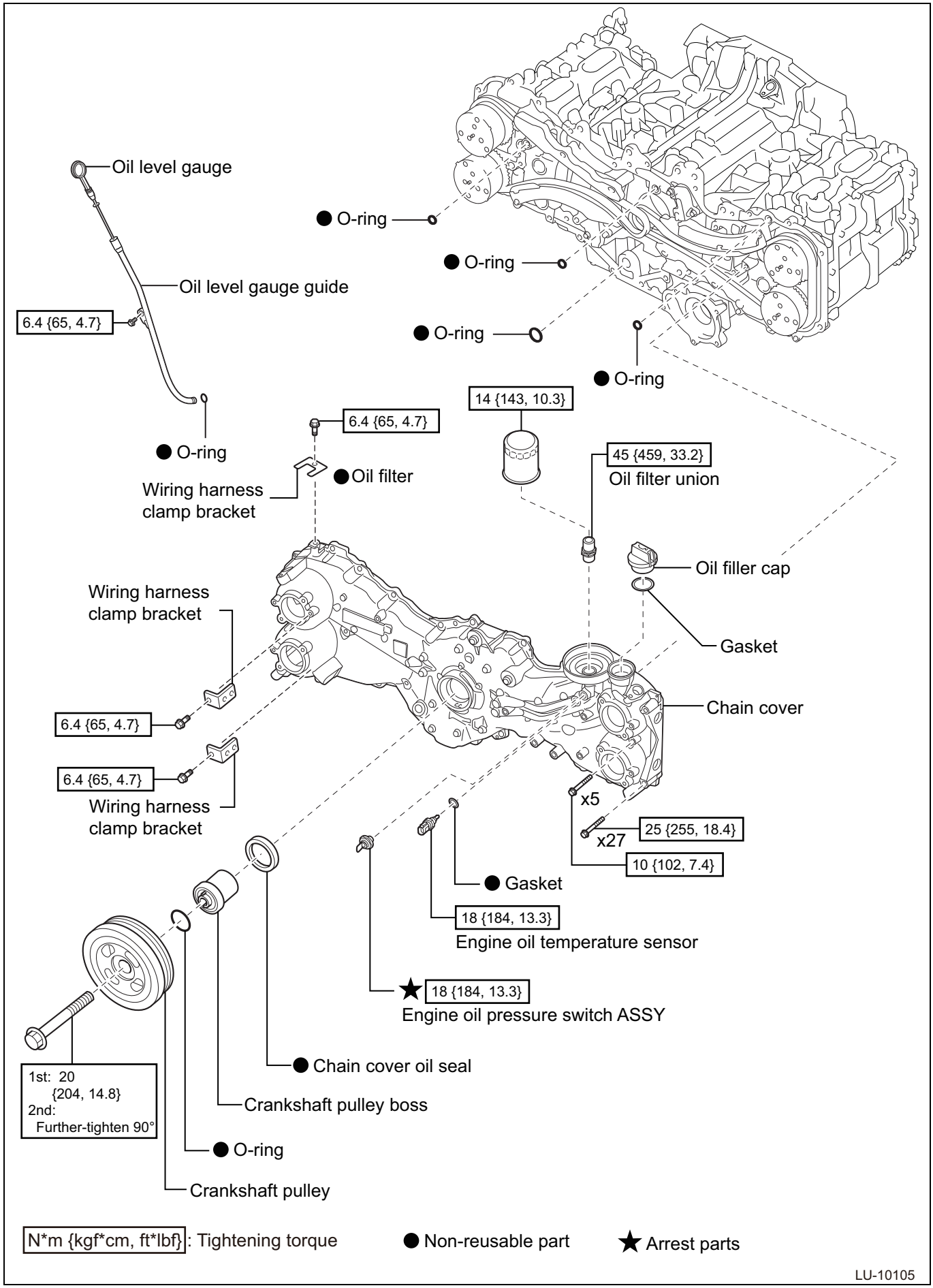
Oil level gauge
● O-ring
● O-ring
Oil level gauge guide
6.4 {65, 4.7}
● O-ring
● O-ring
● O-ring
14 {143, 10.3}
6.4 {65, 4.7}
45 {459, 33.2}
Oil filter union
● O-ring
● Oil filter
Wiring harness clamp bracket
Oil filler cap
Wiring harness clamp bracket
Gasket
Chain cover
6.4 {65, 4.7}
6.4 {65, 4.7}
Wiring harness clamp bracket
x5
x27
25 {255, 18.4}
10 {102, 7.4}
● Gasket
18 {184, 13.3}
Engine oil temperature sensor
★ 18 {184, 13.3}
Engine oil pressure switch ASSY
● Chain cover oil seal
1st: 20 {204, 14.8}
2nd: Further-tighten 90°
Crankshaft pulley boss
● O-ring
Crankshaft pulley
N*m {kgf*cm, ft*lbf}: Tightening torque
● Non-reusable part
★ Arrest parts
LU-10105

LU

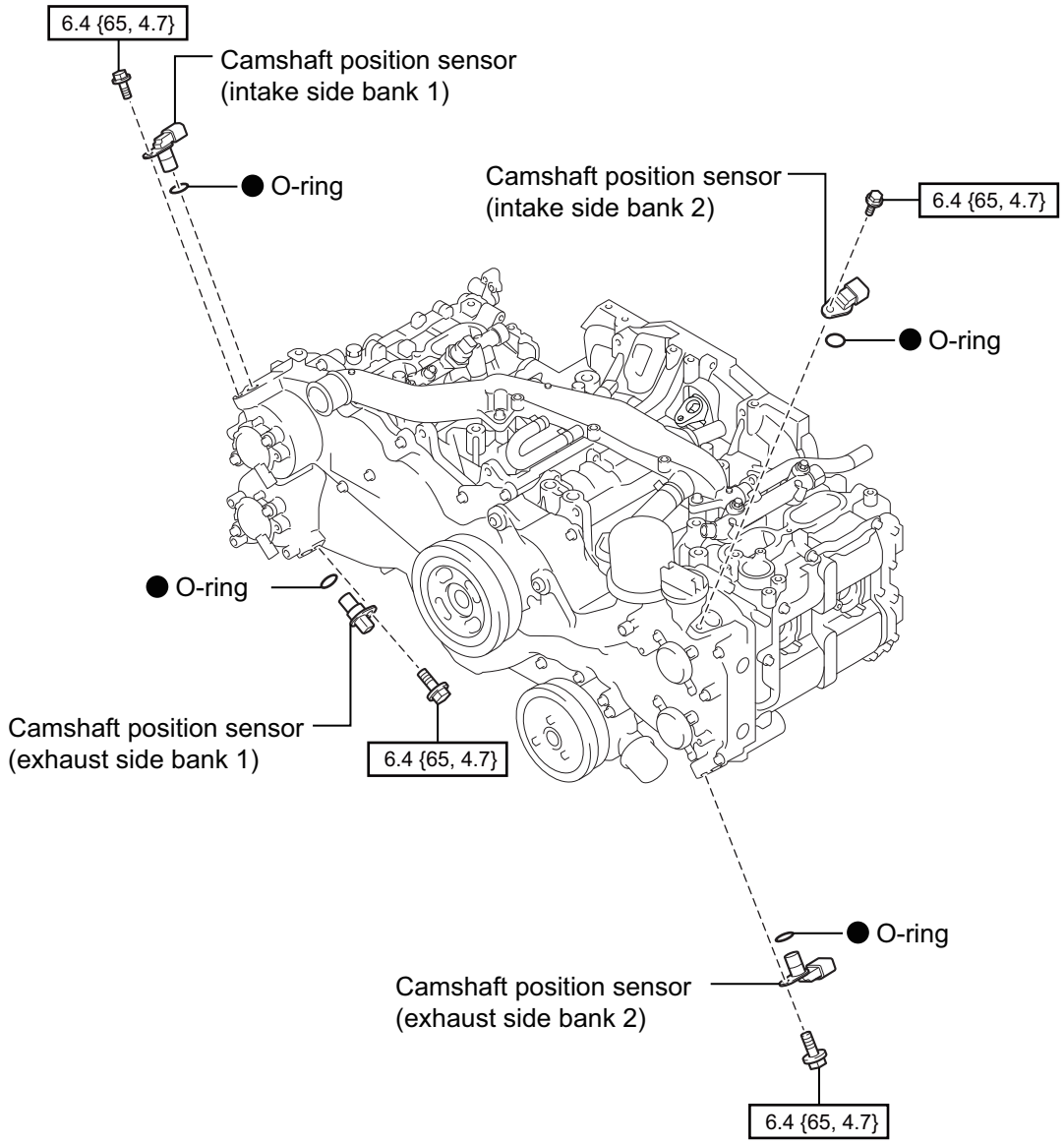

N*m {kgf*cm, ft*lbf}: Specified torque

● Non-reusable part

ME-20577

LU

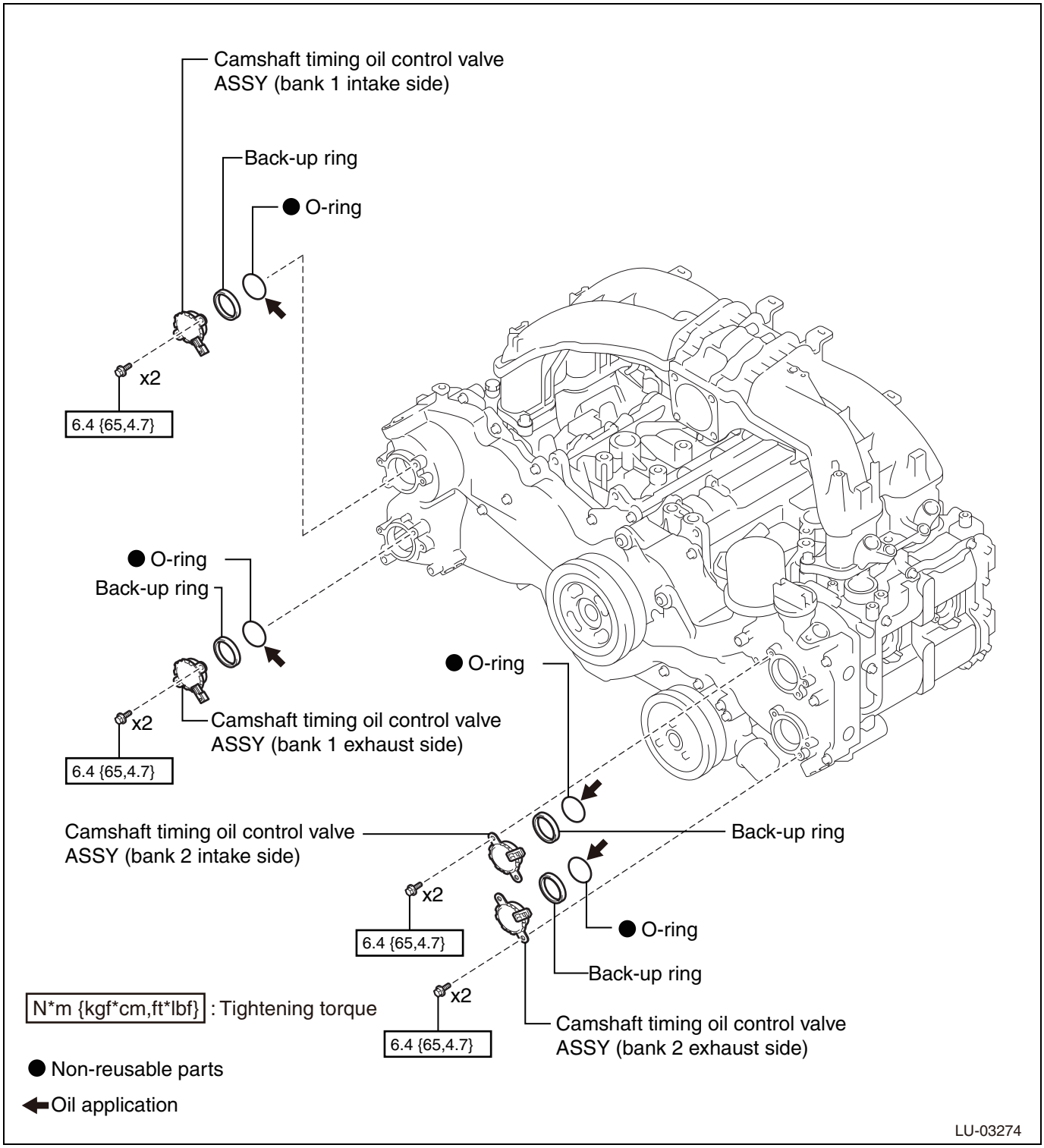

Removal

1. Disconnection of the battery ground terminal (Refer to IN - 6)
2. Draining of coolant (SUBARU Super Coolant) (Refer to CO - 16)
3. Generator ASSY removal (Refer to BH - 31)
4. Removal of injector driver (Refer to FU - 43)
5. Removal of radiator reservoir tank ASSY (Refer to CO - 25)
6. Water filler SUB-ASSY removal (Refer to EM - 77)
7. Removal of exhaust manifold (Refer to IE - 35)
8. Disconnection of radiator outlet hose (Refer to EM - 82)

9. Engine oil draining
   (1) Remove the oil filler cap.
   (2) Remove the oil pan drain plug and gasket.
   (3) After draining the oil, install the oil pan drain plug with a new gasket.
   Standard value:T=41.7N·m {425kgf·cm} {30.8ft·lbf}
10. Water pump pulley removal (Refer to CO - 19)
11. Crankshaft pulley removal (Refer to EM - 49)
12. Removal of intake manifold protector (bank 1 side) (Refer to FU - 22)
13. Engine wiring disconnection
   (1) Remove the two bolts and disconnect the two wiring harness clamp brackets and wiring harness.

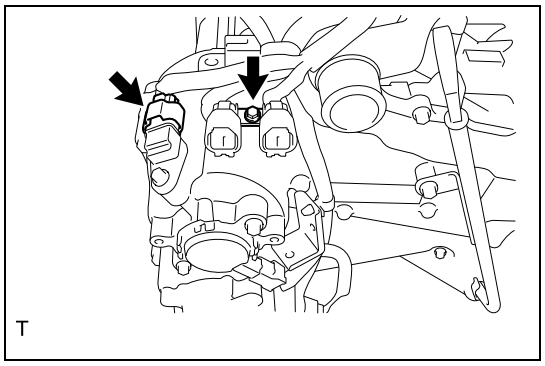

(2) Remove the bolt and disconnect the wiring harness clamp bracket and wiring harness.

(3) Disconnect the connector for camshaft position sensor.

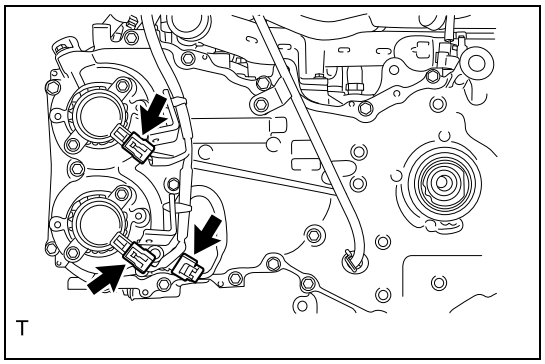

(4) Disconnect the connector of cam position sensor and two connectors of cam timing oil control valve ASSY.

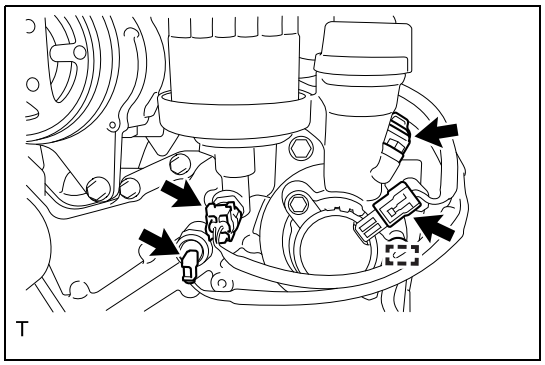

(5) Disconnect the connector of cam position sensor and connectors of cam timing oil control valve ASSY.

(6) Disconnect the connector of engine oil temperature sensor and connector of engine oil pressure switch ASSY.
(7) Disconnect the clamp.

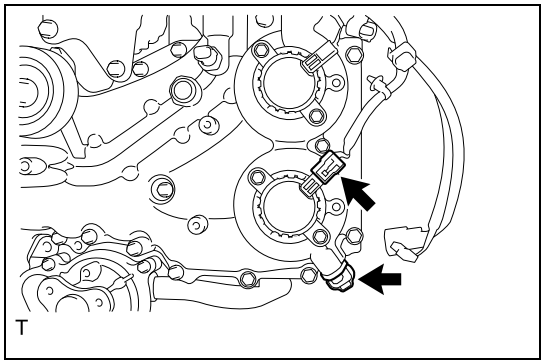

(8) Disconnect the connector of cam position sensor and connectors of cam timing oil control valve ASSY.

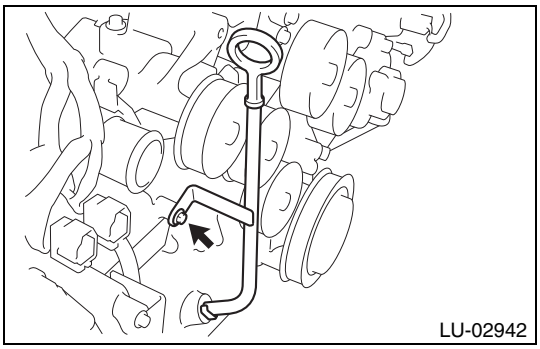

14. Oil level gauge guide removal
    (1) Remove the oil level gauge.
    (2) Remove the bolt and remove the oil level gauge guide.
    (3) Remove the O-ring from the oil level gauge guide.

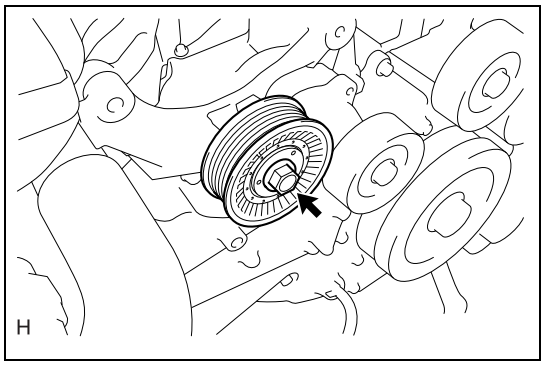

15. Idler pulley SUB-ASSY NO. 2 removal
    (1) Remove the bolt and remove the idler pulley SUB-ASSY NO. 2 and idler pulley cover.

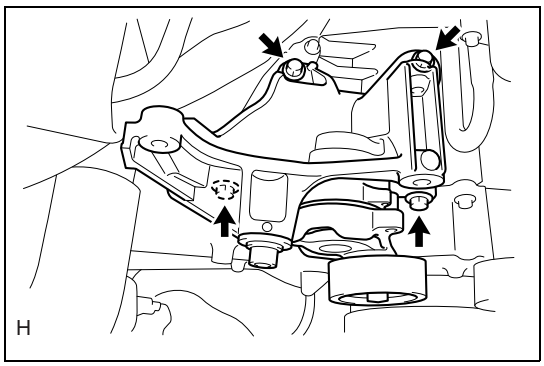

16. Removal of the alternator bracket.
    (1) Remove the four bolts and remove the alternator bracket.

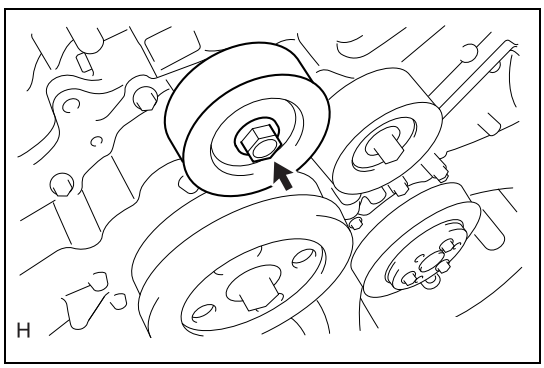

17. Idler pulley SUB-ASSY NO. 1 removal
    (1) Remove the bolt and remove the idler pulley SUB-ASSY NO. 1 and idler pulley cover.

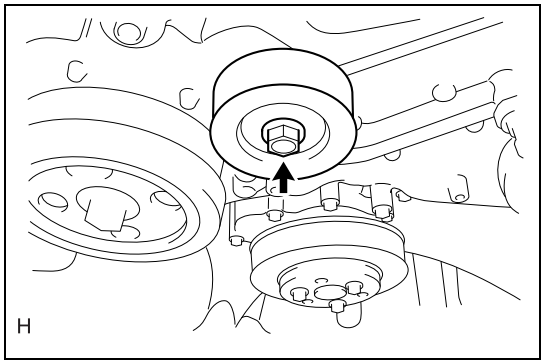

(2) Remove the bolt and remove the idler pulley SUB-ASSY NO. 1 and idler pulley cover.

18. Chain cover oil seal removal (Refer to EM - 50)
19. Chain cover removal
    (1) Remove the 32 bolts.

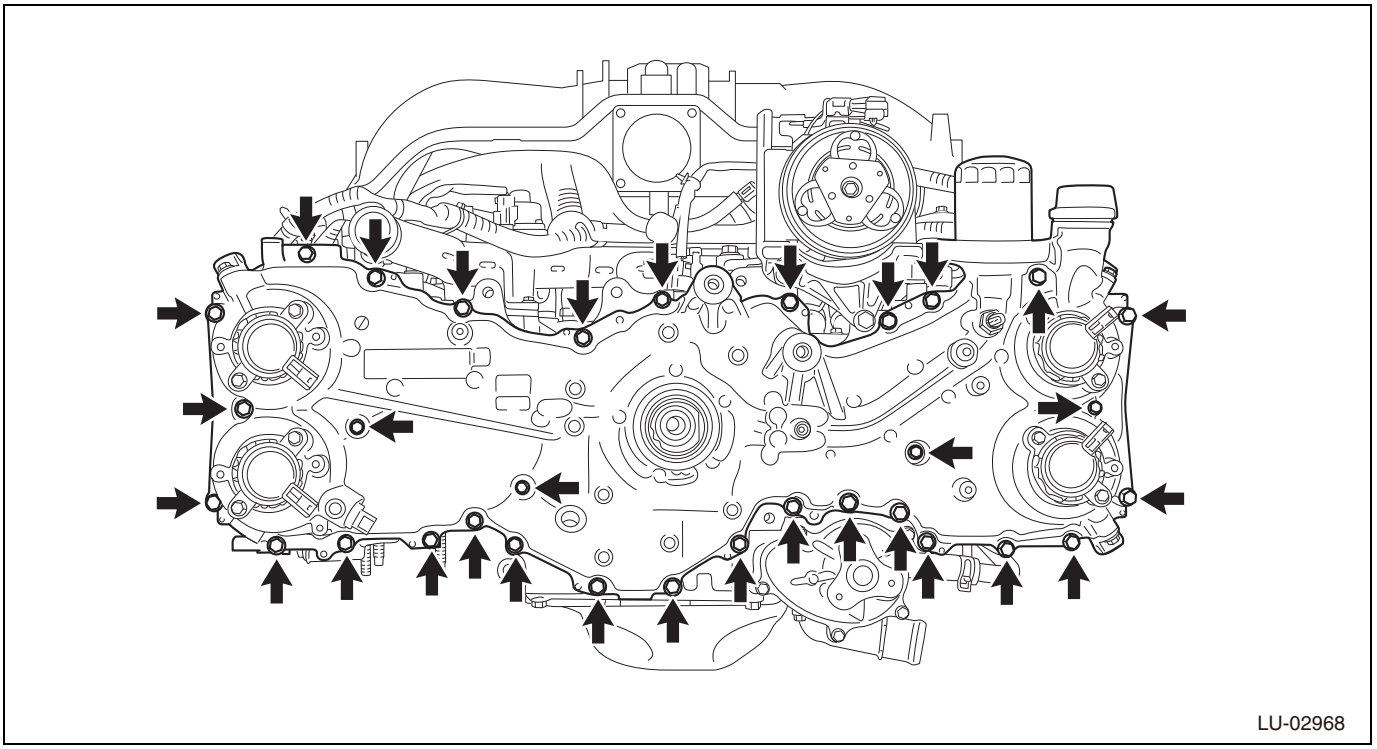

(2) Push out the portions shown in the figure using a bar or similar wrapped with protective tape to remove the chain cover.

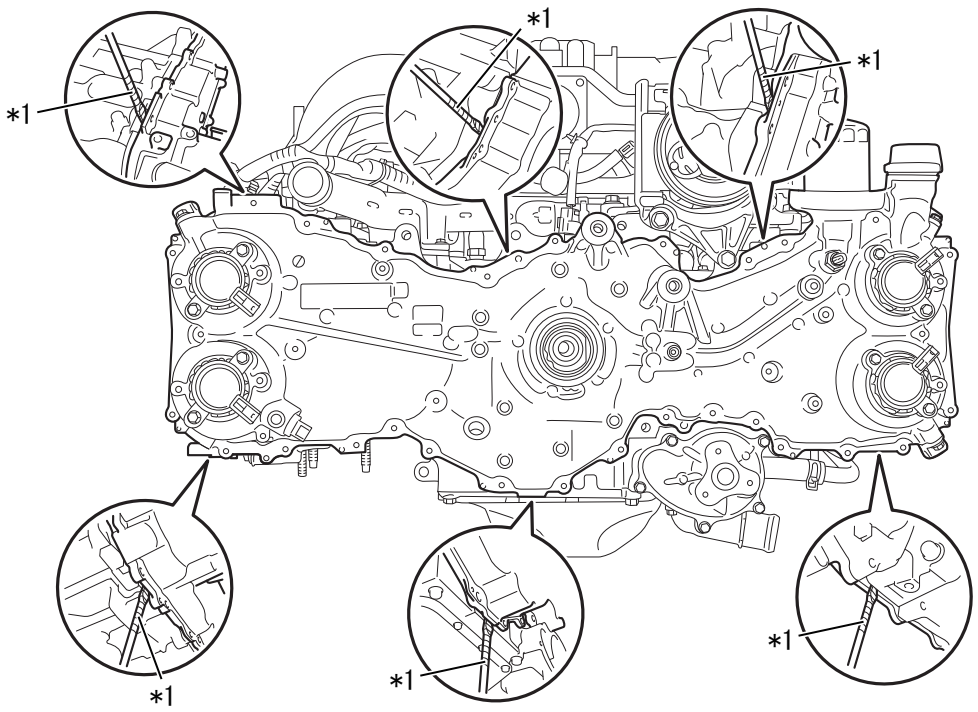

LU-02969

Captions in illustration

*1	Protective tape	-	-

CAUTION:

- Do not damage the chain cover, cylinder head, camshaft timing gear and cylinder block.
- The chain cover may contact the protrusion "a" of the sensor plate of the cam sprocket and cause damage. Therefore, for removal, move the chain cover horizontally to the position where the cam sprocket is not contacted, and then carefully remove the chain cover.

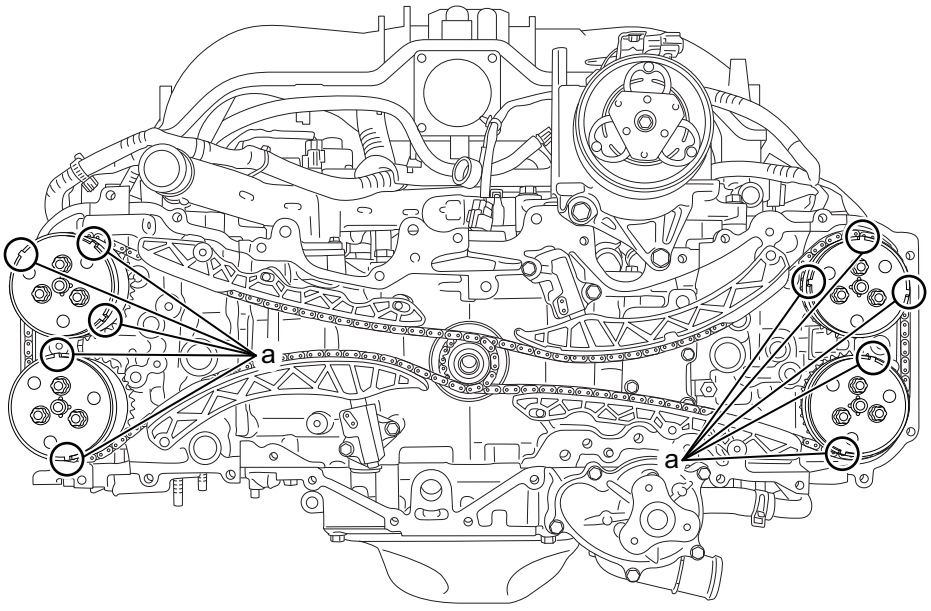

LU-10106

(3) Remove the four O-rings.

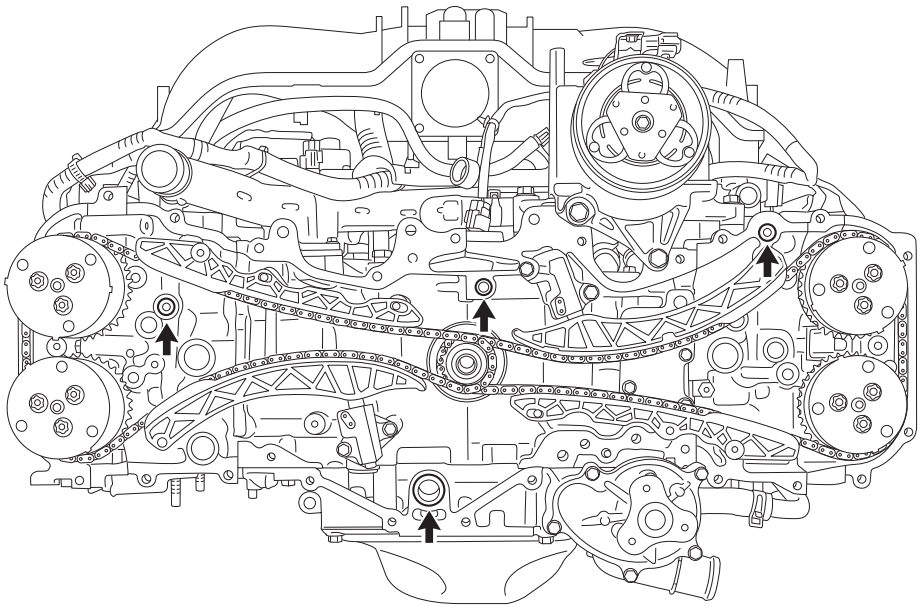

LU-10107

Disassembly

1. Oil filter removal (Refer to LU - 4)
2. Oil filter union removal (Refer to LU - 5)

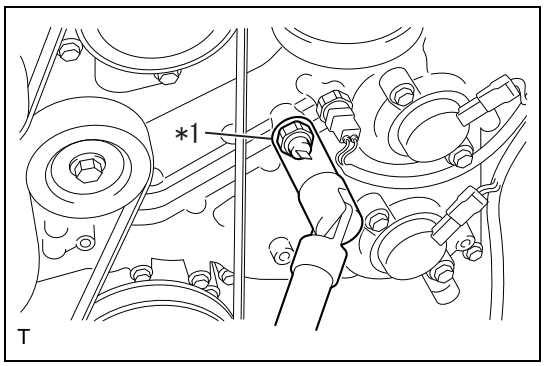

3. Engine oil pressure switch ASSY removal
   (1) Remove the engine oil pressure switch ASSY.

Captions in illustration

*1	Engine oil pressure switch ASSY

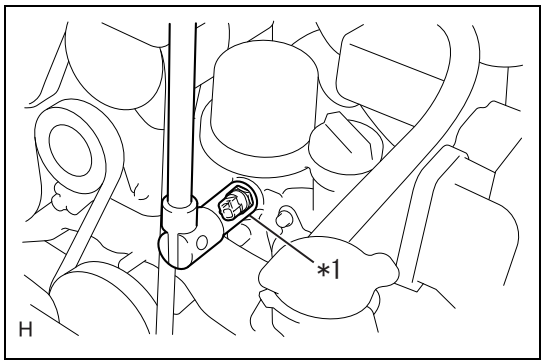

4. Engine oil temperature sensor removal
   (1) Remove the engine oil temperature sensor.

Captions in illustration

*1	Engine oil temperature sensor

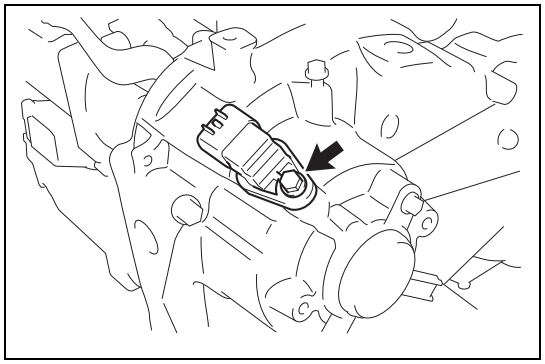

5. Cam position sensor removal (bank 1 intake side)
   (1) Remove the bolt, and remove the camshaft position sensor.
   (2) Remove the O-ring from the camshaft position sensor.

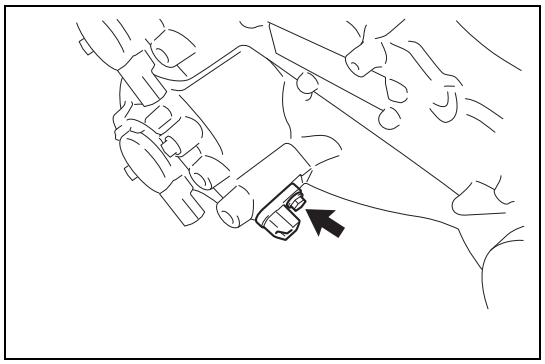

6. Cam position sensor removal (bank 1 exhaust side)
   (1) Remove the bolt, and remove the camshaft position sensor.
   (2) Remove the O-ring from the camshaft position sensor.

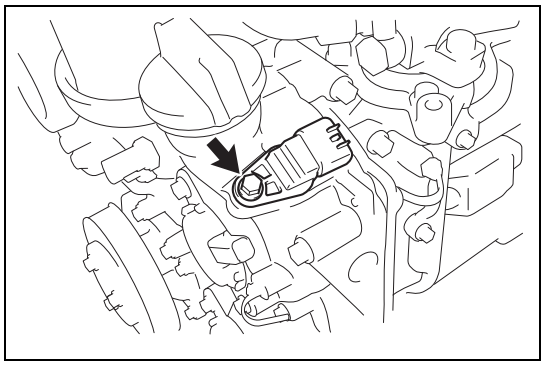

7. Cam position sensor removal (bank 2 intake side)
   (1) Remove the bolt, and remove the camshaft position sensor.
   (2) Remove the O-ring from the camshaft position sensor.

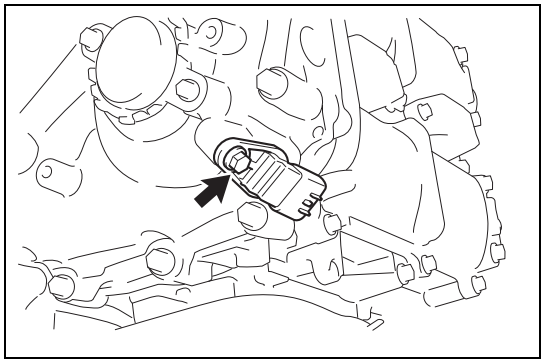

8. Cam position sensor removal (bank 2 exhaust side)
   (1) Remove the bolt, and remove the camshaft position sensor.
   (2) Remove the O-ring from the camshaft position sensor.

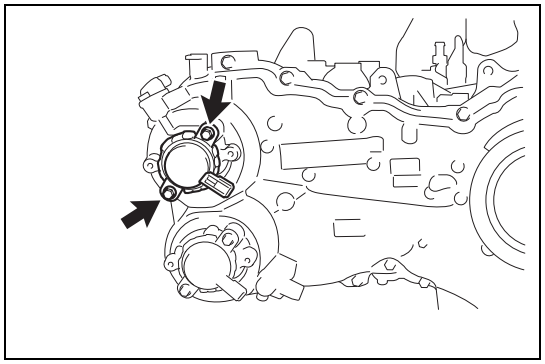

9. Removal of camshaft timing oil control valve ASSY (bank 1 intake side)
   (1) Remove the two bolts and remove the cam timing oil control valve ASSY (bank 1 intake side).

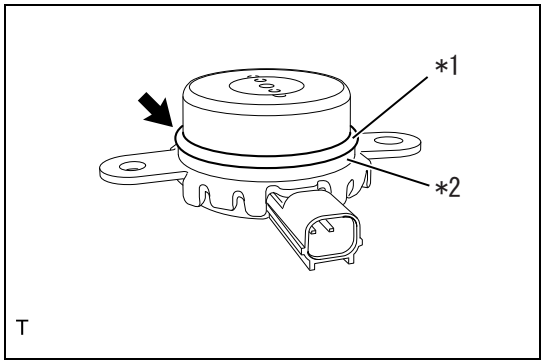

(2) Remove the O-ring from the camshaft timing oil control valve ASSY.

Captions in illustration

*1	O-ring
*2	Back-up ring

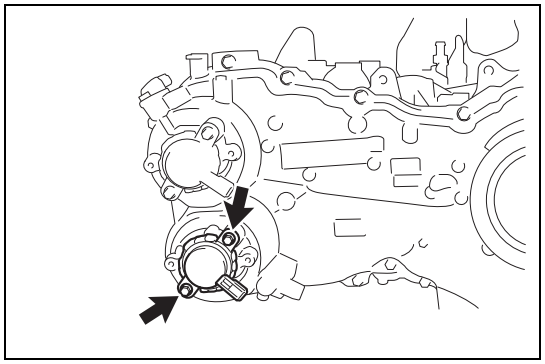

10. Removal of camshaft timing oil control valve ASSY (bank 1 exhaust side)
    (1) Remove the two bolts and remove the cam timing oil control valve ASSY (bank 1 exhaust side).

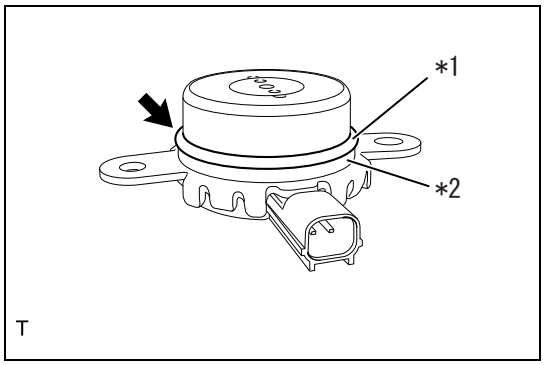

(2) Remove the O-ring from the camshaft timing oil control valve ASSY.

Captions in illustration

*1	O-ring
*2	Back-up ring

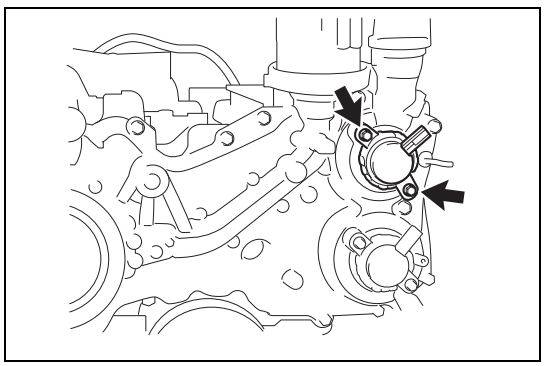

11. Removal of camshaft timing oil control valve ASSY (bank 2 intake side)
    (1) Remove the two bolts and remove the cam timing oil control valve ASSY (bank 2 intake side).

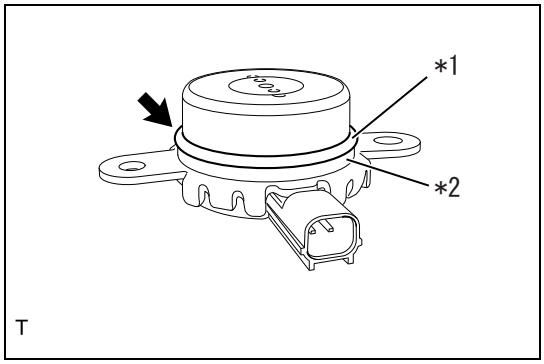

(2) Remove the O-ring from the camshaft timing oil control valve ASSY.

Captions in illustration

*1	O-ring
*2	Back-up ring

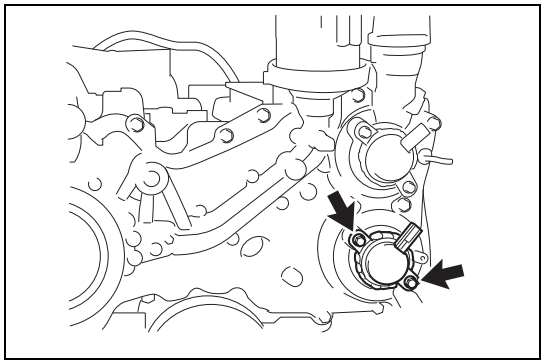

12. Removal of camshaft timing oil control valve ASSY (bank 2 exhaust side)
    (1) Remove the two bolts and remove the cam timing oil control valve ASSY (bank 2 exhaust side).

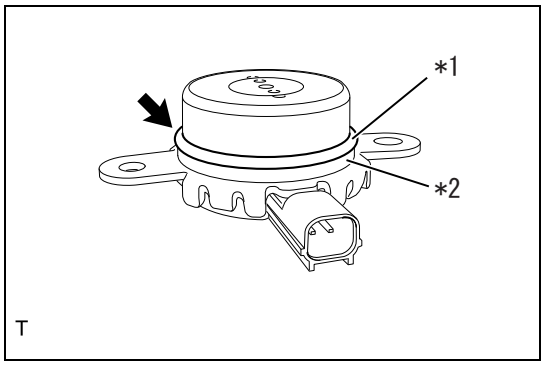

(2) Remove the O-ring from the camshaft timing oil control valve ASSY.

Captions in illustration

*1	O-ring
*2	Back-up ring

Assembly

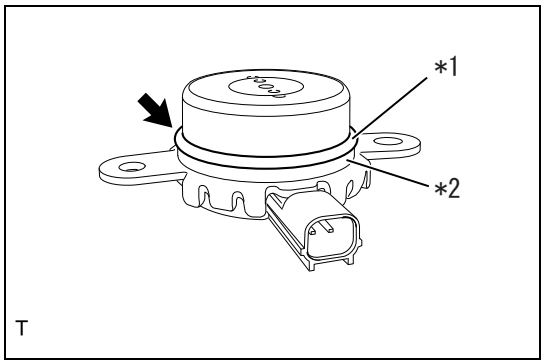

1. Installation of camshaft timing oil control valve ASSY (bank 2 exhaust side)
    (1) Install a new O-ring to the cam timing oil control valve ASSY.

Captions in illustration

*1	O-ring
*2	Back-up ring

(2) Apply engine oil to the O-ring.

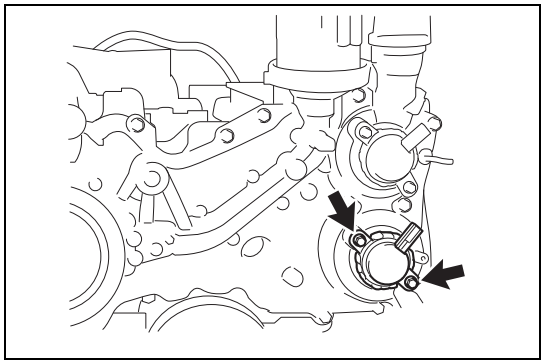

(3) Using 2 bolts, install the camshaft timing oil control valve ASSY.
Standard value:T=6.4N·m {65kgf·cm} {4.7ft·lbf}

2. Installation of camshaft timing oil control valve ASSY (bank 2 intake side)

(1) Install a new O-ring to the cam timing oil control valve ASSY.

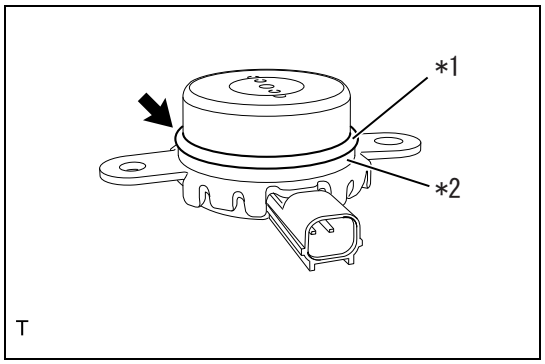

Captions in illustration

*1	O-ring
*2	Back-up ring

(2) Apply engine oil to the O-ring.

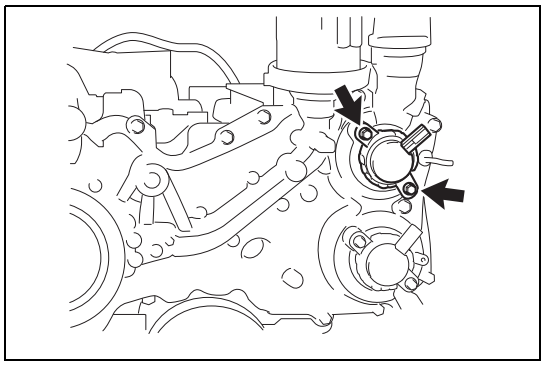

(3) Using 2 bolts, install the camshaft timing oil control valve ASSY.
Standard value:T=6.4N·m {65kgf·cm} {4.7ft·lbf}

3. Installation of camshaft timing oil control valve ASSY (bank 1 exhaust side)

(1) Install a new O-ring to the cam timing oil control valve ASSY.

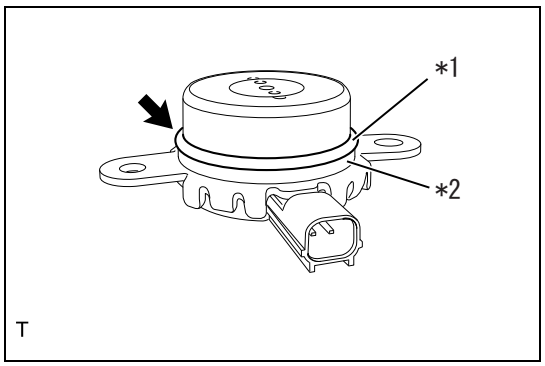

Captions in illustration

*1	O-ring
*2	Back-up ring

(2) Apply engine oil to the O-ring.

LU

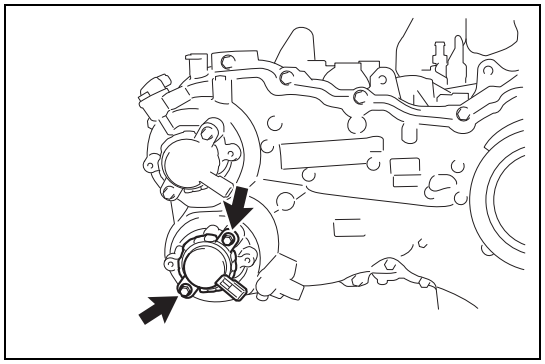

(3) Using 2 bolts, install the camshaft timing oil control valve ASSY.
Standard value:T=6.4N·m {65kgf·cm} {4.7ft·lbf}

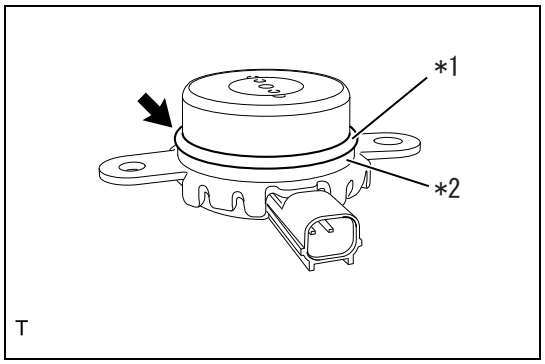

4. Installation of camshaft timing oil control valve ASSY (bank 1 intake side)
(1) Install a new O-ring to the cam timing oil control valve ASSY.

Captions in illustration

*1	O-ring
*2	Back-up ring

(2) Apply engine oil to the O-ring.

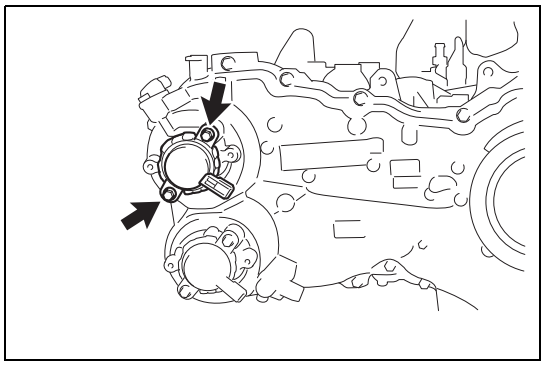

(3) Using 2 bolts, install the camshaft timing oil control valve ASSY.
Standard value:T=6.4N·m {65kgf·cm} {4.7ft·lbf}

5. Cam position sensor installation (bank 2 exhaust side)
(1) Attach a new O-ring to the camshaft position sensor.
(2) Apply engine oil to the O-ring.

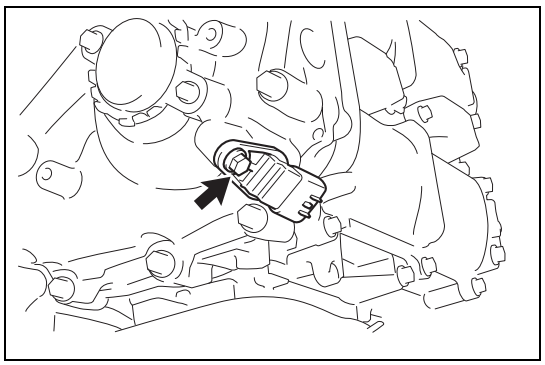

(3) Using bolt, install the camshaft position sensor.
Standard value:T=6.4N·m {65kgf·cm} {4.7ft·lbf}

6. Cam position sensor installation (bank 2 intake side)
(1) Attach a new O-ring to the camshaft position sensor.
(2) Apply engine oil to the O-ring.

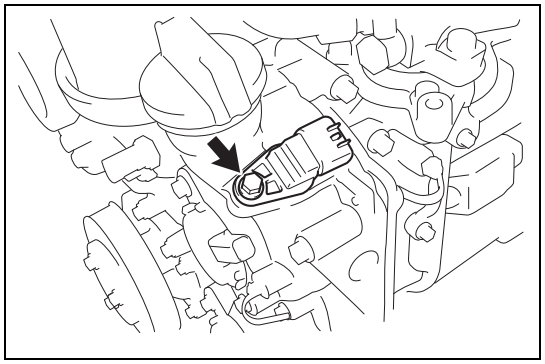

(3) Using bolt, install the camshaft position sensor.
Standard value:T=6.4N·m {65kgf·cm} {4.7ft·lbf}

7. Cam position sensor installation (bank 1 exhaust side)
   (1) Attach a new O-ring to the camshaft position sensor.
   (2) Apply engine oil to the O-ring.

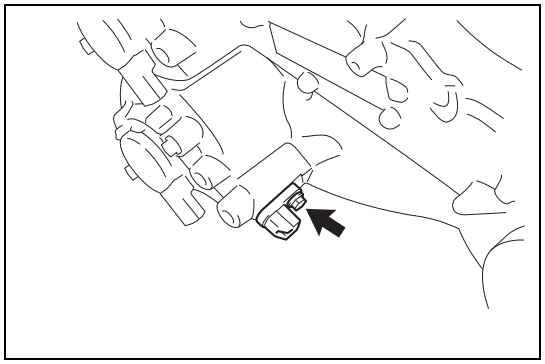

(3) Using bolt, install the camshaft position sensor.
Standard value:T=6.4N·m {65kgf·cm} {4.7ft·lbf}

LU

8. Cam position sensor installation (bank 1 intake side)
   (1) Attach a new O-ring to the camshaft position sensor.
   (2) Apply engine oil to the O-ring.

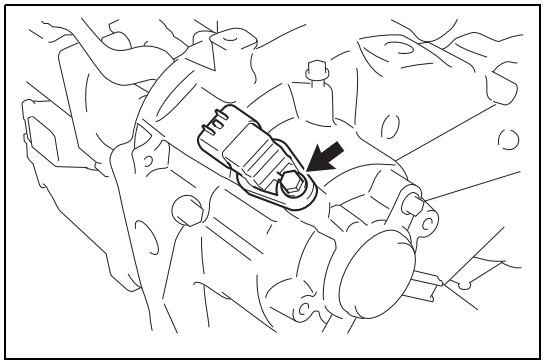

(3) Using bolt, install the camshaft position sensor.
Standard value:T=6.4N·m {65kgf·cm} {4.7ft·lbf}

9. Engine oil temperature sensor installation
   (1) Install a new gasket to the engine oil temperature sensor.

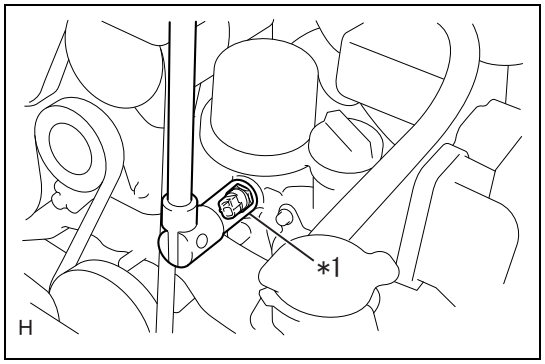

(2) Install the engine oil temperature sensor.

Captions in illustration

*1	Deep socket wrench

Standard value:T=18N·m {184kgf·cm} {13.3ft·lbf}

10. Engine oil pressure switch ASSY installation
    (1) Degrease the threaded portion of engine oil pressure switch ASSY.

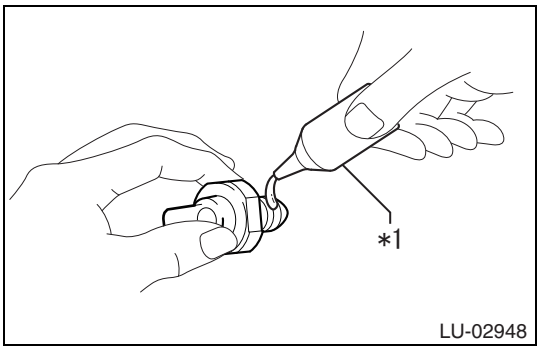

    (2) Apply THREE BOND 1324 to the threaded portion.

Captions in illustration

*1	THREE BOND 1324

CAUTION:
Do not apply THREE BOND 1324 to the oil hole.

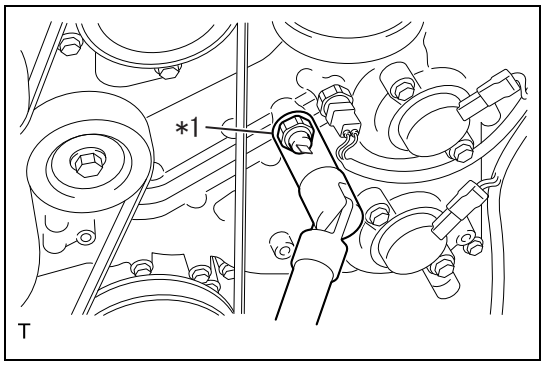

    (3) Install the engine oil pressure switch ASSY.

Captions in illustration

*1	Deep socket wrench

Standard value:T=18N·m {184kgf·cm} {13.3ft·lbf}
CAUTION:
Do not start the engine within 1 hour after the assembly.

11. Oil filter union installation (Refer to LU - 5)
12. Oil filter installation (Refer to LU - 5)

Installation

1. Chain cover installation
    (1) Apply a coat of engine oil to four new O-rings and install them to the engine.
    (2) Before applying the liquid gasket, completely remove the old seal material on the sealing portion.
    (3) If there are gaps at the locations as shown in the figure, fill the gaps with THREE BOND 1217G/1217H or equivalent.

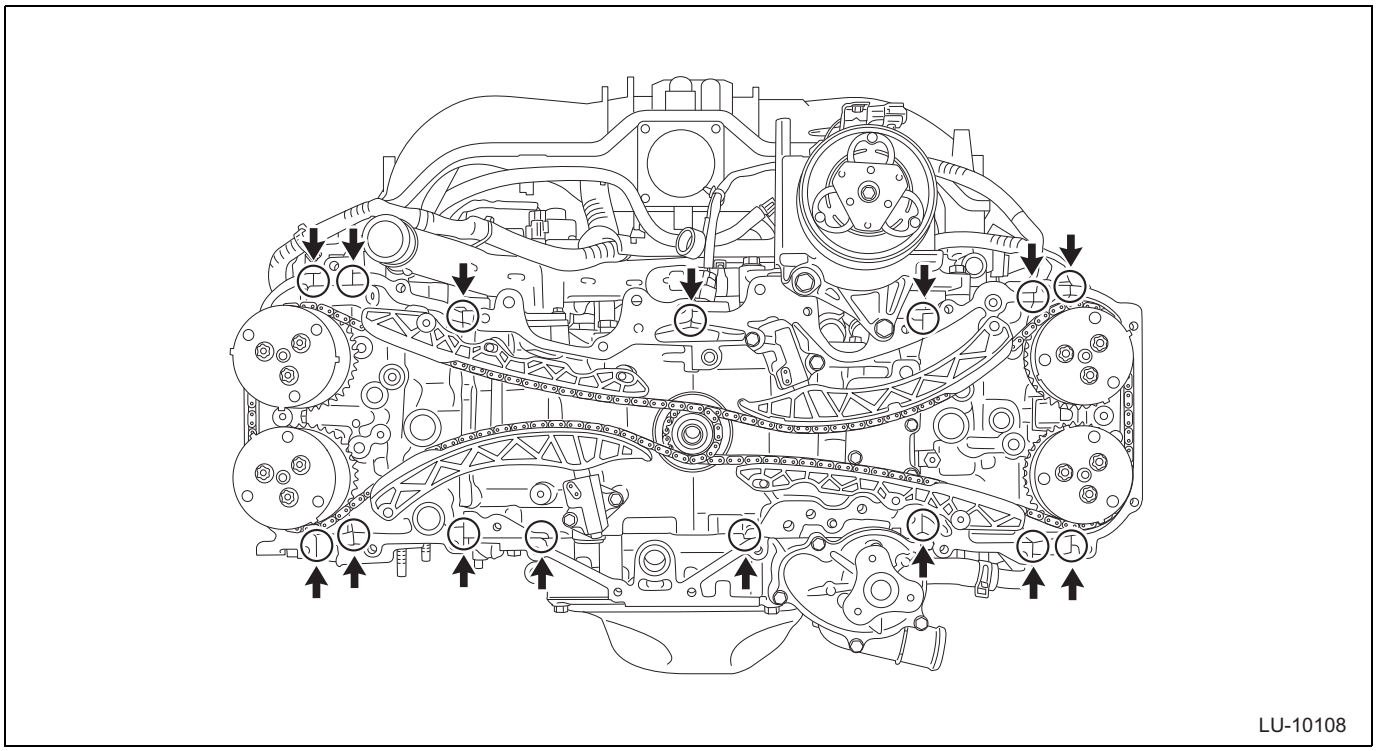

(4) Apply THREE BOND 1217G/1217H or equivalent to the locations of chain cover as shown in the figure.

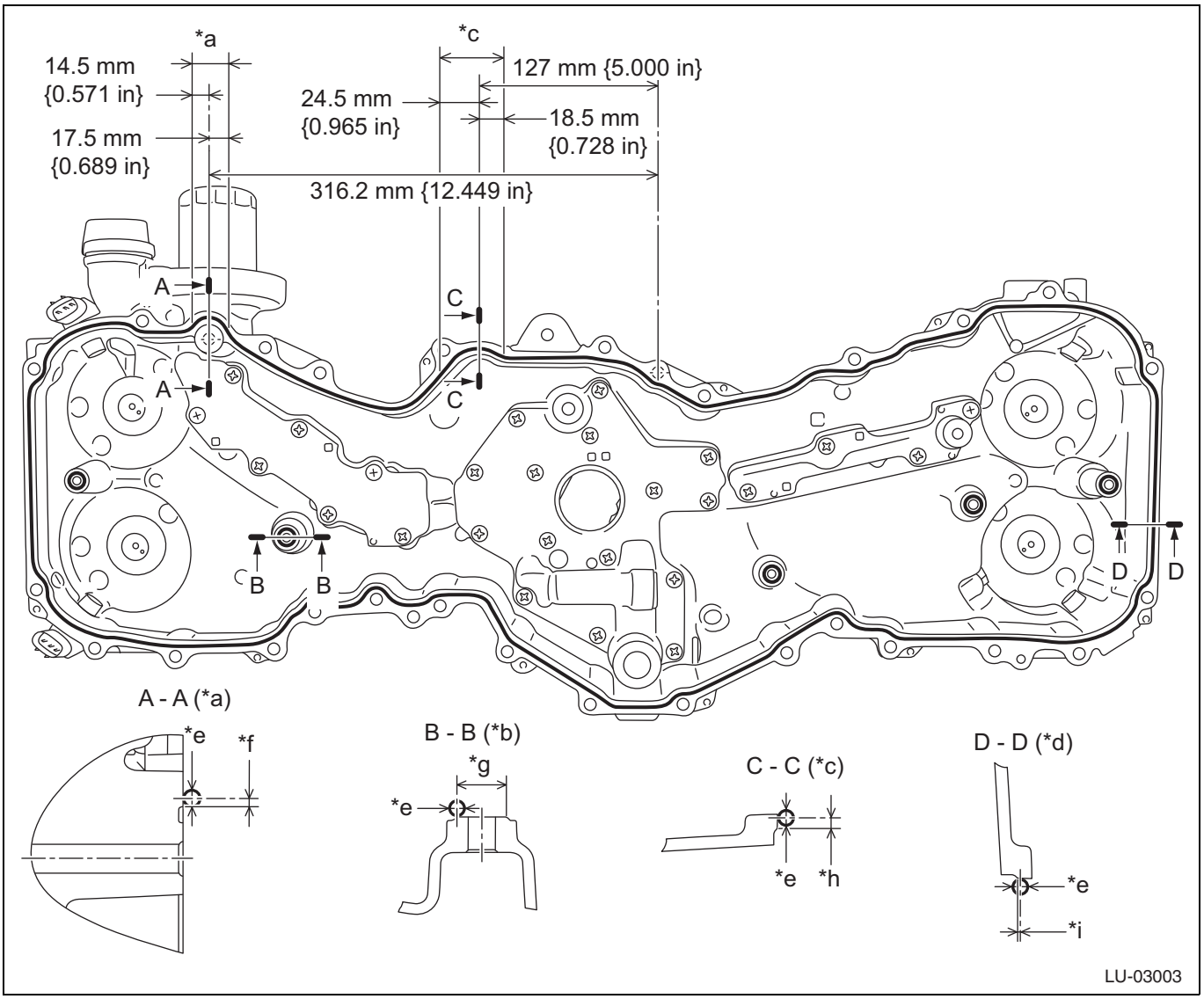

Captions in illustration

*a	Range A	*b	Boss portion (five locations)
*c	Range B	*d	Other than ranges A and B
*e	φ3.5 to 4.5 mm {0.138 to 0.177 in}	*f	2 mm {0.079 in}
*g	φ12 mm {0.472 in}	*h	2.5 mm {0.098 in}
*i	0.5 mm {0.020 in}	-	-

CAUTION:

- Clean and degrease the installation surface.
- Install within 5 min. after applying liquid gasket.
- The chain cover may contact the protrusion "a" of the sensor plate of the cam sprocket and cause damage. Therefore, for installation, move horizontally and set the chain cover while being careful not to let the chain cover contact to the cam sprocket.

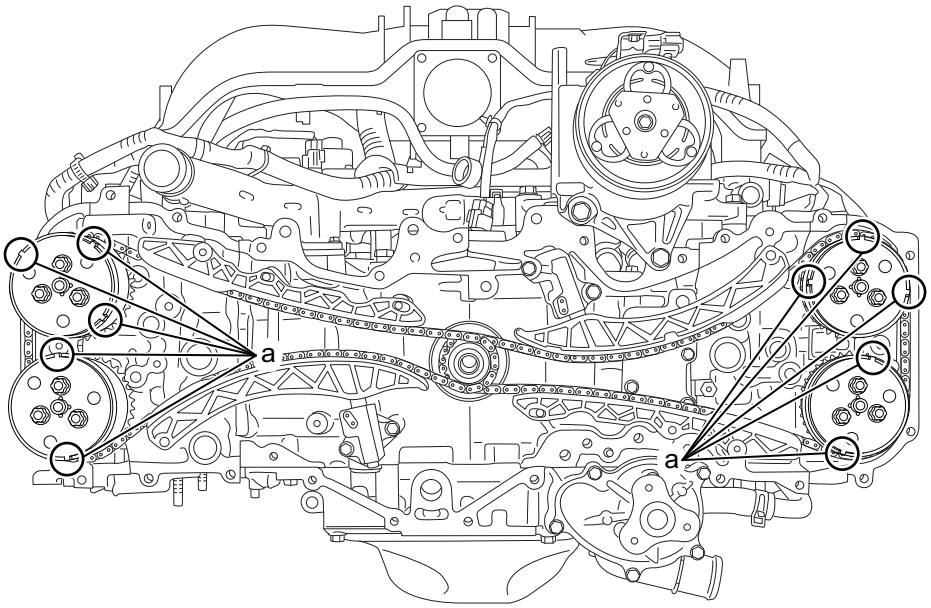

LU-10106

LU

- Do not fill the engine oil within 2 hours after the installation.
- Do not start the engine within 2 hours after the installation.

(5) Temporarily install the chain cover with the 32 bolts.

(6) Fully tighten the 32 bolts in the order as shown in the figure.

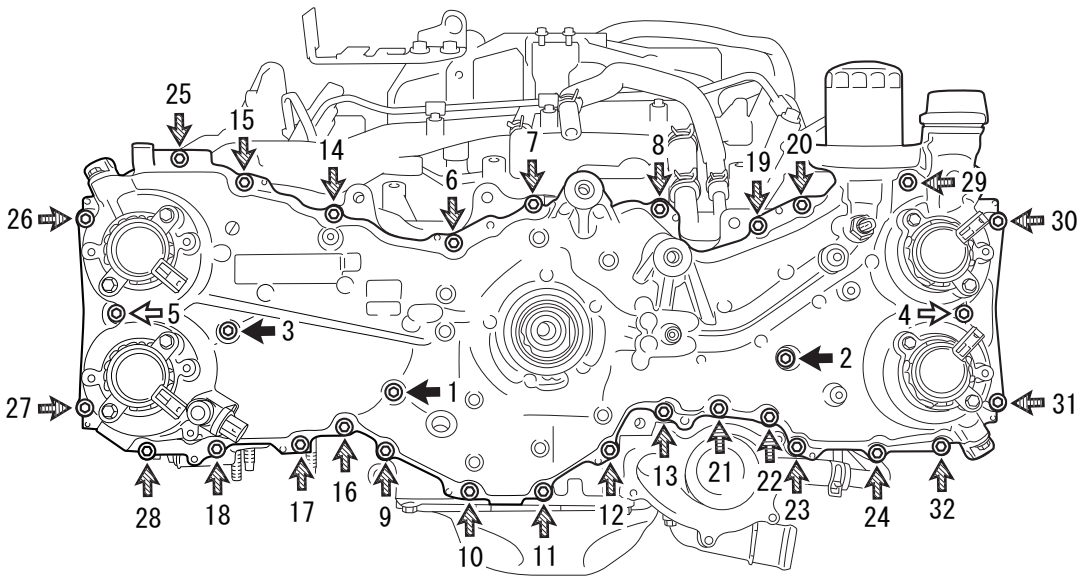

ME-20717

Captions in illustration

➡	Bolt A	⇨	Bolt B
⇛	Bolt C	⇨	Bolt D

Standard value:Bolts A, B

T=10N·m {102kgf·cm} {7.4ft·lbf}

Bolt C, D

T=25N·m {255kgf·cm} {18.4ft·lbf}

NOTE:

Bolt type	Bolt length (except for head)	Bolt type	Bolt length (except for head)
Bolt A	20 mm {0.787 in}	Bolt B	50 mm {1.969 in}
Bolt C	25 mm {0.984 in}	Bolt D	60 mm {2.362 in}

2. Chain cover oil seal installation (Refer to EM - 50)

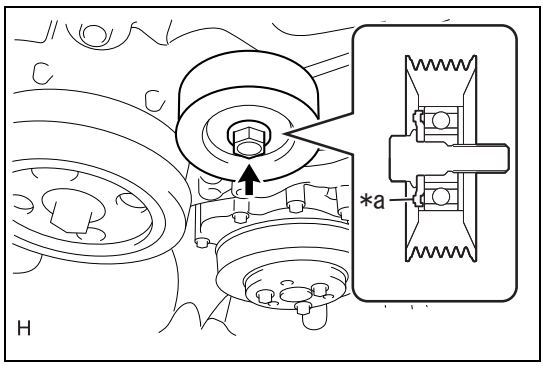

3. Idler pulley SUB-ASSY NO. 1 installation

(1) Install the idler pulley cover as shown in the figure.

Captions in illustration

*a	Protrusion portion

(2) Install the idler pulley SUB-ASSY NO. 1 and idler pulley cover with the bolt.

Standard value:T=36N·m {367kgf·cm} {26.6ft·lbf}

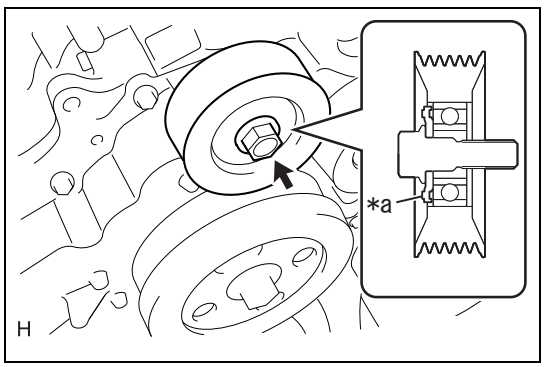

(3) Install the idler pulley cover as shown in the figure.

Captions in illustration

*a	Protrusion portion

(4) Install the idler pulley SUB-ASSY NO. 1 and idler pulley cover with the bolt.

Standard value:T=36N·m {367kgf·cm} {26.6ft·lbf}

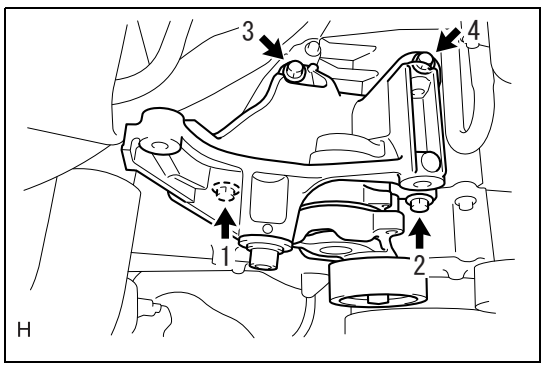

4. Installation of the alternator bracket

(1) Temporarily install the alternator bracket with four bolts.

(2) Tighten the four bolts in the order as shown in the figure.

Standard value:T=36N·m {367kgf·cm} {26.6ft·lbf}

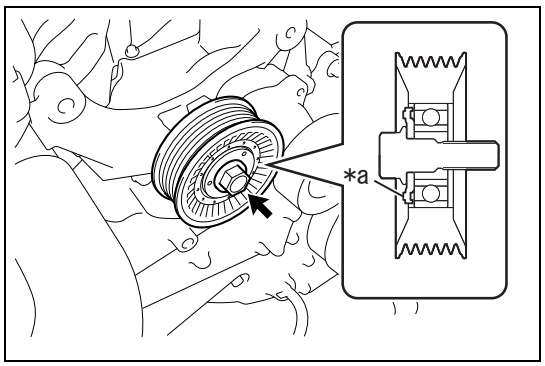

5. Idler pulley SUB-ASSY NO. 2 installation

(1) Install the idler pulley cover as shown in the figure.

Captions in illustration

*a	Protrusion portion

(2) Install the idler pulley SUB-ASSY NO. 2 and idler pulley cover with the bolt.

Standard value:T=36N·m {367kgf·cm} {26.6ft·lbf}

6. Oil level gauge guide installation
   (1) Install a new O-ring to the oil level gauge guide.
   (2) Apply engine oil to the O-ring and install the oil level gauge guide with the bolt.
   Standard value:T=6.4N·m {65kgf·cm} {4.7ft·lbf}
   (3) Install the oil level gauge.
7. Engine wiring connection
   (1) Connect the connector of cam position sensor and connector of cam timing oil control valve ASSY.
   (2) Connect the clamp.
   (3) Connect the connector of engine oil temperature sensor and connector of engine oil pressure switch ASSY.
   (4) Connect the connector of cam position sensor and connector of cam timing oil control valve ASSY.
   (5) Connect the two connectors of cam position sensor and connector of cam timing oil control valve ASSY.
   (6) Connect the connector for camshaft position sensor.
   (7) Install the wiring harness clamp bracket and wiring harness with the bolt.
   Standard value:T=6.4N·m {65kgf·cm} {4.7ft·lbf}
   (8) Install the two wiring harness clamp brackets and wiring harness with the bolt.
   Standard value:T=6.4N·m {65kgf·cm} {4.7ft·lbf}
8. Installation of intake manifold protector (bank 1 side) (Refer to FU - 28)
9. Crankshaft pulley installation (Refer to EM - 50)
10. Water pump pulley installation (Refer to CO - 20)
11. Connection of radiator outlet hose (Refer to EM - 111)
12. Exhaust manifold installation (Refer to IE - 36)
13. Water filler SUB-ASSY installation (Refer to EM - 114)
14. Radiator reservoir tank ASSY installation (Refer to CO - 31)
15. Installation of injector driver (Refer to FU - 44)
16. Generator ASSY installation (Refer to BH - 35)
17. Connection of the battery ground terminal
   Standard value:T=6.0N·m {61kgf·cm} {4.4ft·lbf}
18. Replenishing of coolant (SUBARU Super Coolant) (Refer to CO - 16)
19. Engine oil refill (Refer to LU - 5)
20. Engine oil level check (Refer to LU - 2)
21. Leak check of coolant (SUBARU Super Coolant) (Refer to CO - 2)
22. Engine oil leakage check (Refer to LU - 6)

Starting

Starting system (FA20)
- Parts location ST-2
- On-vehicle inspection ST-3
- How to troubleshoot ST-9
- Circuit figure ST-11

Key interlock system
- Function inspection ST-13
- Parts location ST-13
- Symptom table ST-13
- Circuit figure ST-14
- Cannot remove or insert the key ST-14

Starter ASSY (FA20)
- Exploded view ST-18
- Removal ST-21
- Disassembly ST-22
- Inspection ST-27
- Reassembly ST-33
- Installation ST-41

Engine switch
- Exploded view ST-43
- Removal ST-43
- Installation ST-43
- Unit inspection ST-44

Ignition (starter) switch ASSY
- Exploded view ST-45
- Removal ST-45
- Installation ST-46
- Unit inspection ST-46

Key lock unit
- Exploded view ST-47
- Removal ST-47
- Installation ST-47

Relay
- Unit inspection ST-49

Starting system (FA20)

Parts location

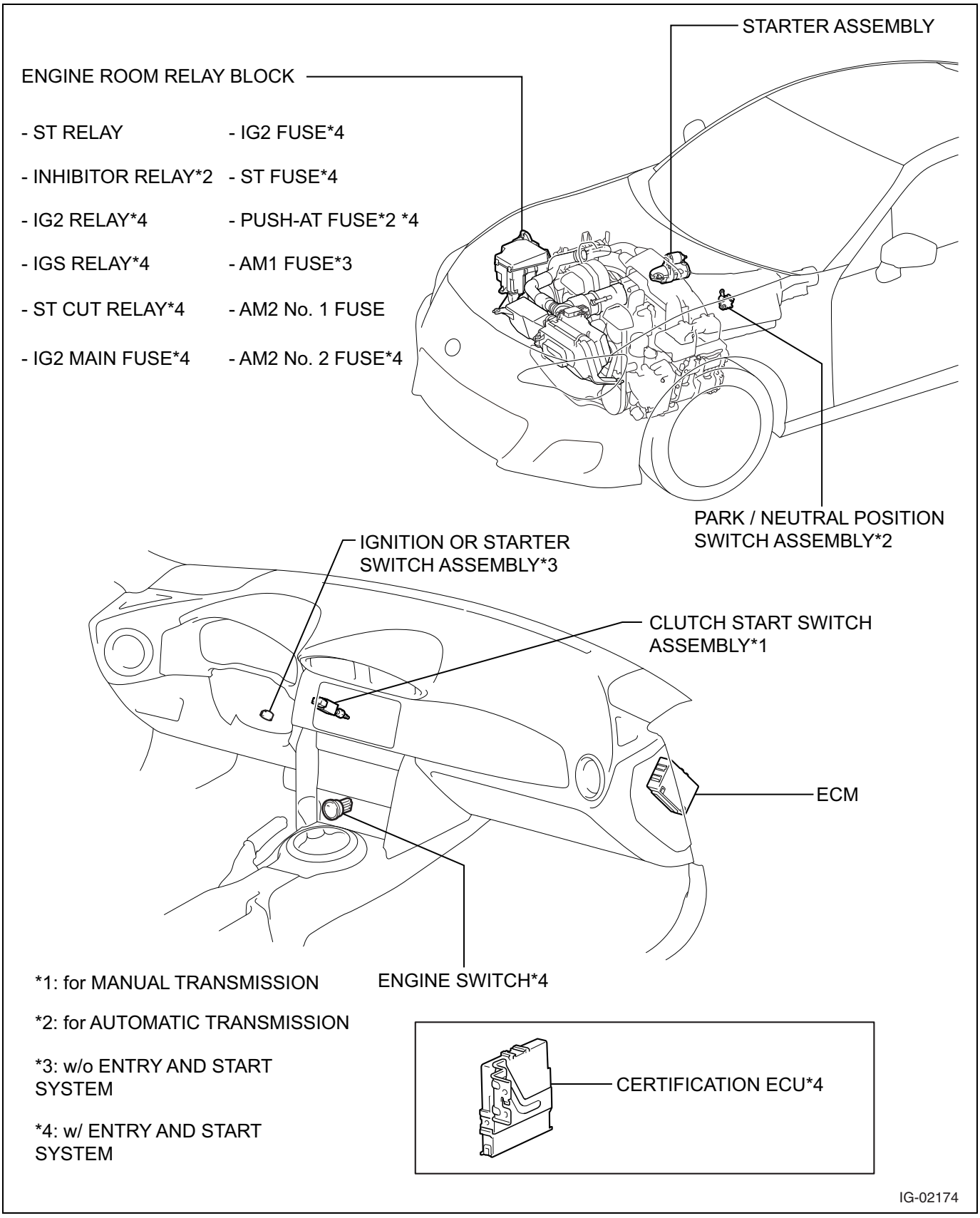

ST

On-vehicle inspection

NOTE:

- The following check is performed with the starter mounted on the vehicle to measure the contact condition of starter magnet switch contact (hereinafter referred to as contact) electrically during engine cranking for check.
- If the contact is faulty, its contact resistance is too high and the time required for the contact to switch ON completely is long.

1. Starter ASSY check
   (1) Contact resistance measurement method
   NOTE:
   - With the contact resistance measurement method, the resistance when the starter is energized is measured and the resistance increases when the contact is worn and its contact condition degrades.
   - Since the contact resistance cannot be measured directly, it is calculated from the starter driving current and the voltage between the terminals.

   (a)Check the DTC. (Refer to IN - 30)
   CAUTION:
   When a diagnostic code is detected, perform troubleshooting by code.

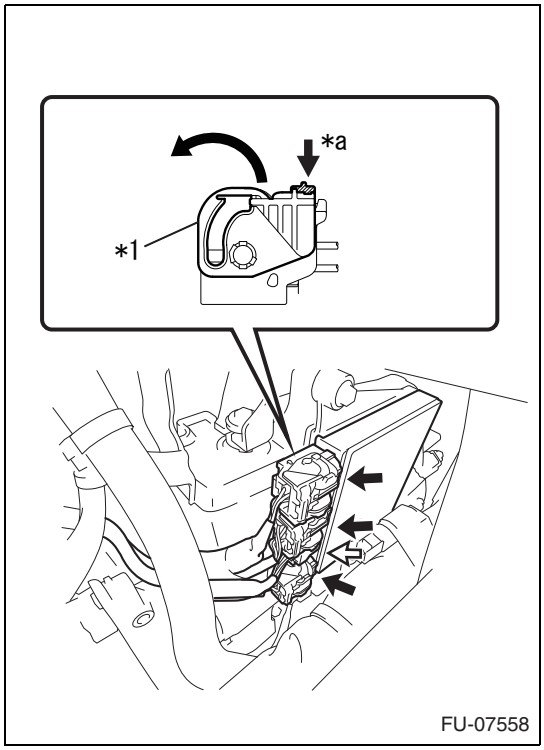

(b)Move the lock lever in the direction of arrow to unlock the three connectors.
Disconnect the three connectors with lock and normal connector from the injector driver.

Captions in illustration

*1	Lock lever
➡	Connector with lock
⇨	Normal connector
*a	Unlock

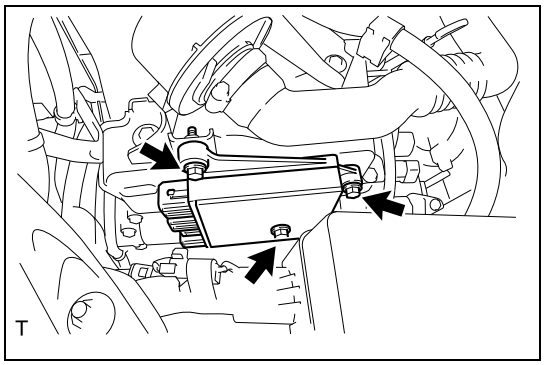

(c)Remove the three bolts and remove the injector driver.

(d)Remove the chamber. (Refer to IE - 31)

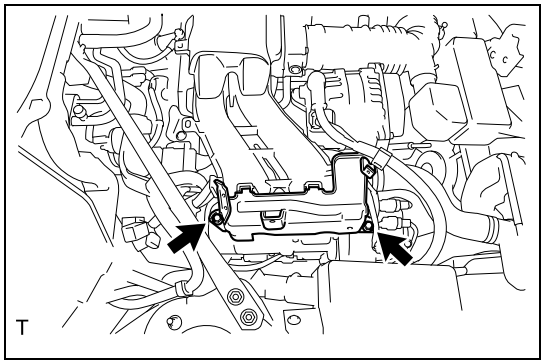

(e)Remove the 2 bolts, and remove the intake manifold protector (bank 1 side).

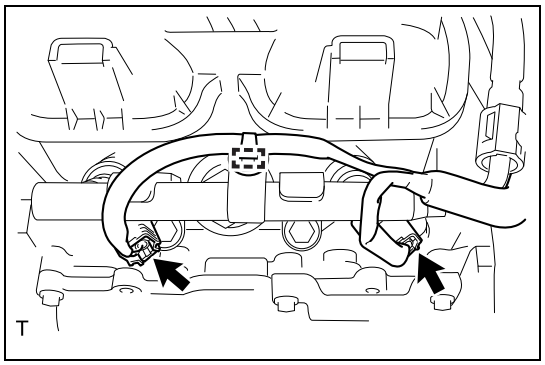

(f) Disconnect the two connectors of fuel injector.

(g)Install the intake manifold protector (bank 1 side) with the two bolts.
Standard value:T=19N·m {194kgf·cm} {14.0ft·lbf}

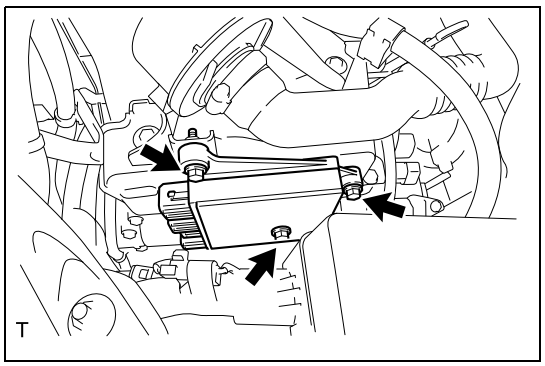

(h)Install the injector driver with the three bolts.
Standard value:T=6.4N·m {65kgf·cm} {4.7ft·lbf}
NOTE:
Leave the two upper connectors of injector driver disconnected.

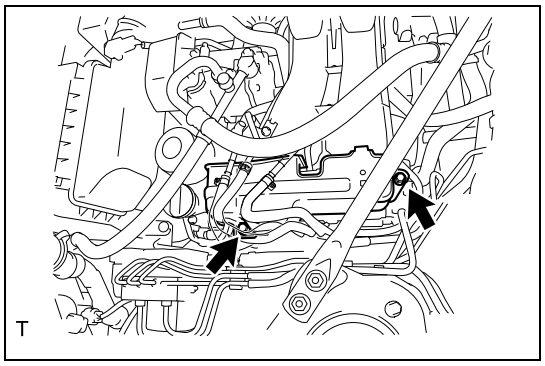

(i) Remove the 2 bolts, and remove the intake manifold protector (bank 2 side).

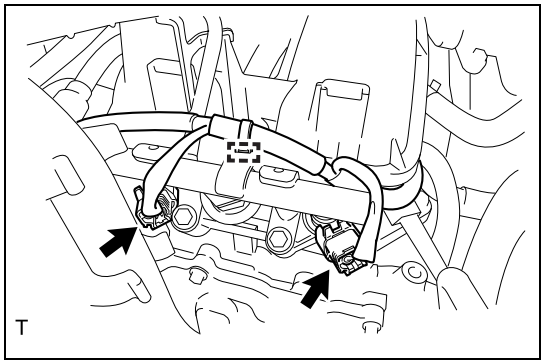

(j) Disconnect the two connectors of fuel injector.

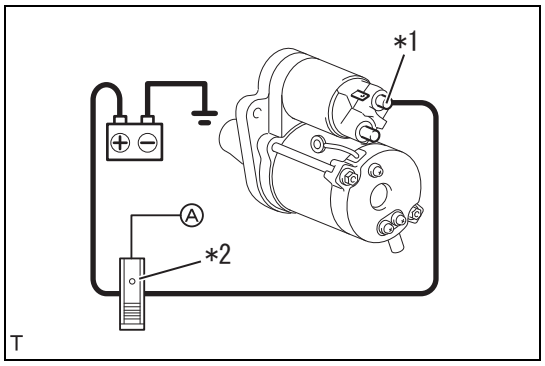

(k) Measure the starter driving current while cranking at the position A in the figure five times. Calculate the average and record it.

Captions in illustration

*1	Terminal S
*2	AC/DC probe 400A

NOTE:

- Since the current generated by the generator may be measured depending on the measurement position, make sure that the current displayed on the electrical tester is within the range shown in the table and the starter driving current is measured properly.

Starter driving current

Starter driving current	Starter output
100 to 180 A	1.0 kW (transmission MT) 1.6 kW (transmission AT)

- The starter driving current in the table indicates the reference value when the engine is hot.

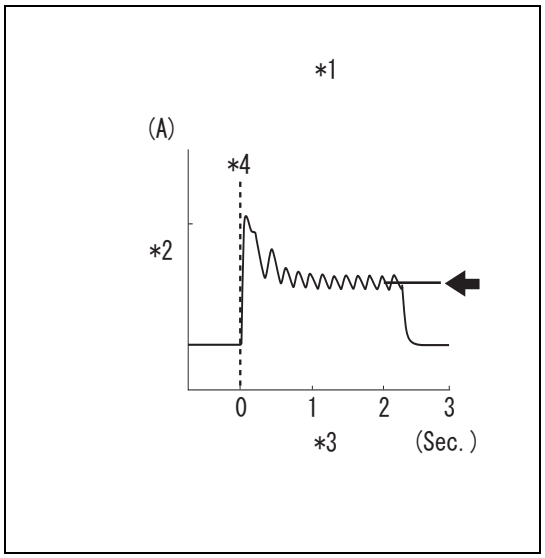

- Perform the cranking for about 2 seconds and then read the value when the current indicated on the circuit tester stabilizes.
- Since the vehicle with the smart entry & start system is equipped with the cranking hold control, cranking is continued for a certain period of time when the engine does not start. To stop cranking, press the push button start switch again.

Captions in illustration

*1	Current change image
*2	Current
*3	Time
*4	STA ON
➡	Read the current value when the current change stabilizes.

(l) Disconnect the battery ground terminal. (Refer to IN - 6)

ST

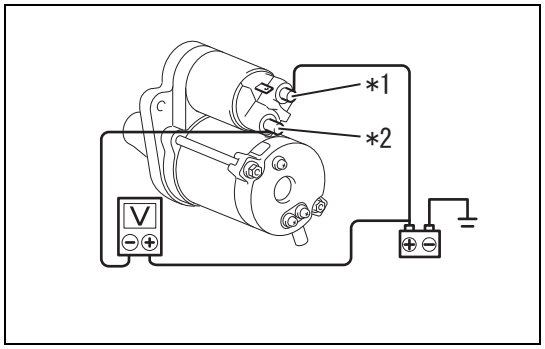

(m)Set the digital tester between the starter terminal M and engine wiring No. 2.

Captions in illustration

*1	Terminal M
*2	Terminal S

CAUTION:
Be careful not to short the terminal +B.
NOTE:
Attach alligator clips to the leads of electrical tester and secure them on the terminal M and the battery positive terminal side.

(n)Reconnect the battery ground terminal.
Standard value:T=6.0N·m {61kgf·cm} {4.4ft·lbf}

(o)Measure the voltage between the starter terminal M and engine wiring No. 2 while cranking 20 times.

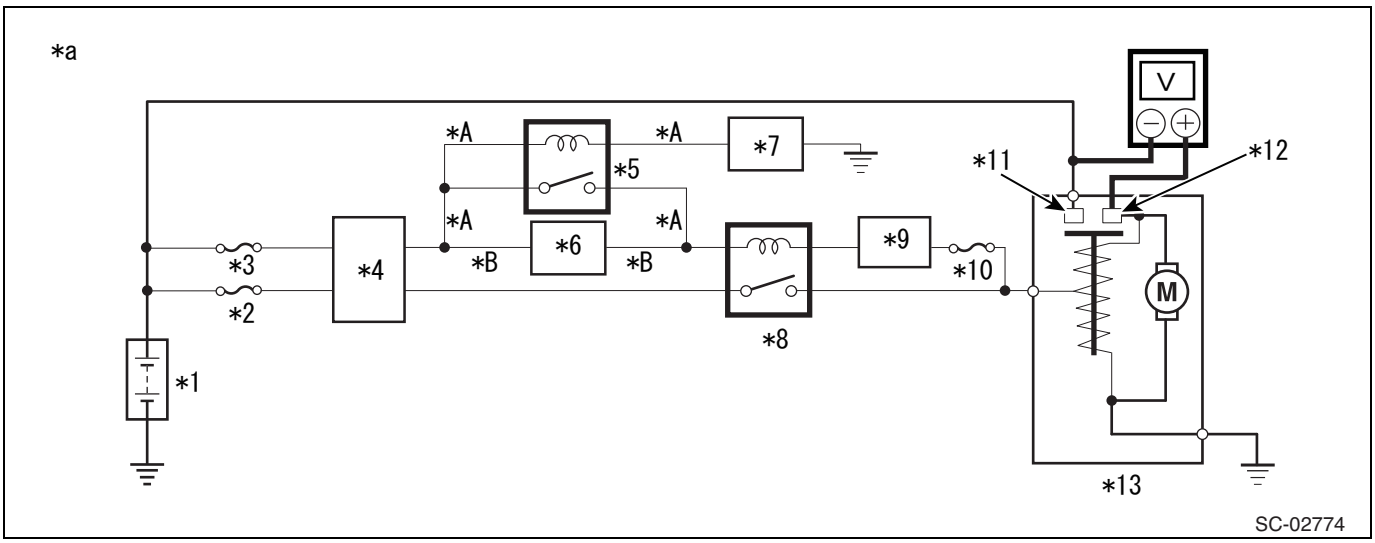

Captions in illustration

*A	Transmission M/T	*B	Transmission A/T
*1	Battery	*2	AM2 No. 1 fuse
*3	AM1 fuse	*4	Ignition OR starter switch
*5	INHIBITOR relay	*6	Clutch start switch
*7	Neutral start switch	*8	ST relay
*9	Engine control computer	*10	ST fuse
*11	Terminal S	*12	Terminal M
*13	Starter ASSY	-	-
*a	Wiring harness connection diagram	-	-

CAUTION:
- Be careful not to short the terminal +B.
- If the starter cannot be stopped while the measurement, remove the battery negative terminal to stop the starter, and then check the push button start switch or ignition (starter) switch ASSY, starter relay, starter ASSY and wiring harness. Replace the faulty parts.

NOTE:
- Since the contact conditions of moving contacts and fixed contacts vary during the operation, it is necessary to measure about 20 times.

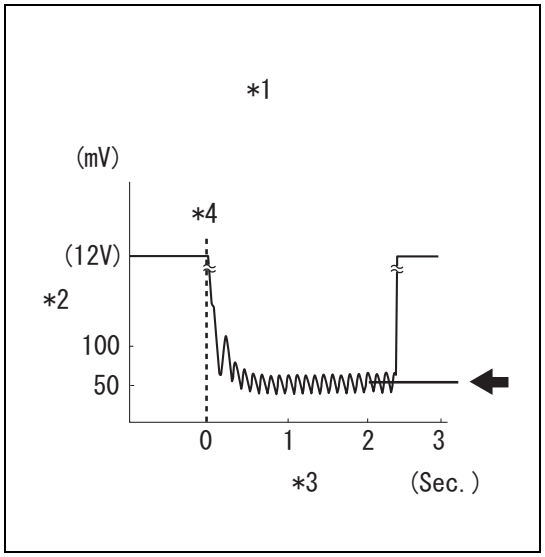

- Perform the cranking for about 2 seconds and then read the value when the voltage indicated on the circuit tester stabilizes.
- Since the vehicle with the smart entry & start system is equipped with the cranking hold control, cranking is continued for a certain period of time when the engine does not start. To stop cranking, press the push button start switch again.

Captions in illustration

*1	Current change image
*2	Voltage
*3	Time
*4	STA ON
➡	Read the current value when the current change stabilizes.

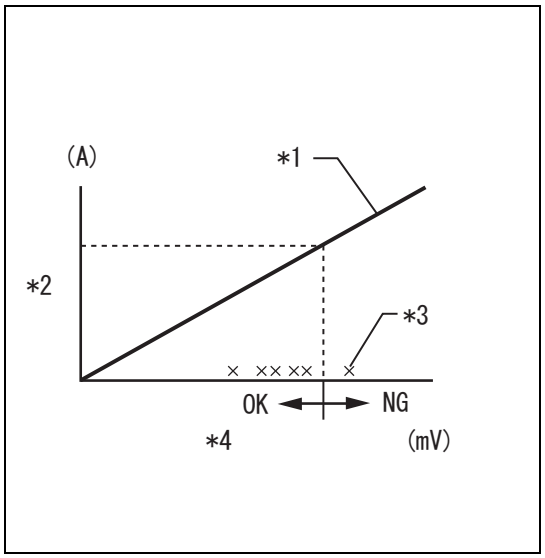

(p)Calculate the voltage between the starter terminals from the measurement values above.

How to calculate the standard value

Standard value (mV) = 2.5 mΩ (Starter criteria resistance) ×Average value of starter driving current

Calculation example

Average value of starter driving current: 120 A Starter criteria resistance (2.5 mΩ) 120 ×2.5 = 300, and the standard value is 300 mV or less.

Standard value: Measurement voltage (mV) is equal to or less than standard value (mV).

NOTE:

Replace the starter contact if the measurement value exceeds the standard value even once among the 20 measurements.

Captions in illustration

*1	Starter criteria resistance (1.5 mΩ)
*2	Starter driving current
*3	Measurement result
*4	Measured voltage

(q)Disconnect the battery ground terminal. (Refer to IN - 6)

ST

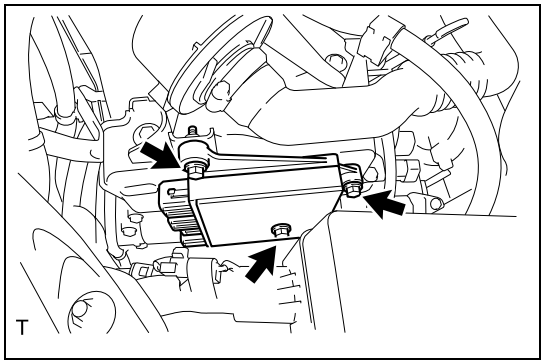

(r) Remove the three bolts and remove the injector driver.

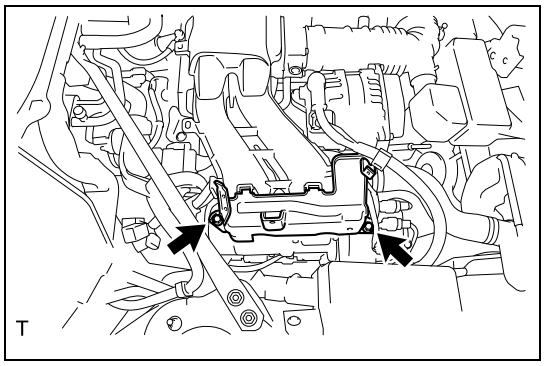

(s) Remove the 2 bolts, and remove the intake manifold protector (bank 1 side).

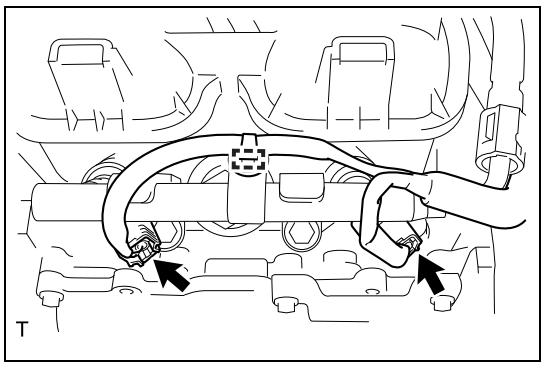

(t) Connect the two connectors of fuel injector.

(u) Using 2 bolts, install the intake manifold protector (bank 1 side).
Standard value: T=19N·m {194kgf·cm} {14.0ft·lbf}

(v) Install the chamber. (Refer to IE - 32)

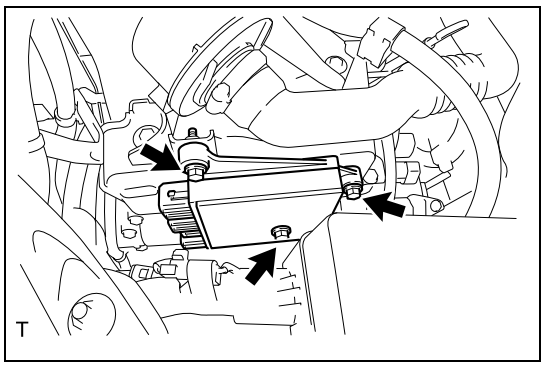

(w) Install the injector driver with the three bolts.
Standard value: T=6.4N·m {65kgf·cm} {4.7ft·lbf}

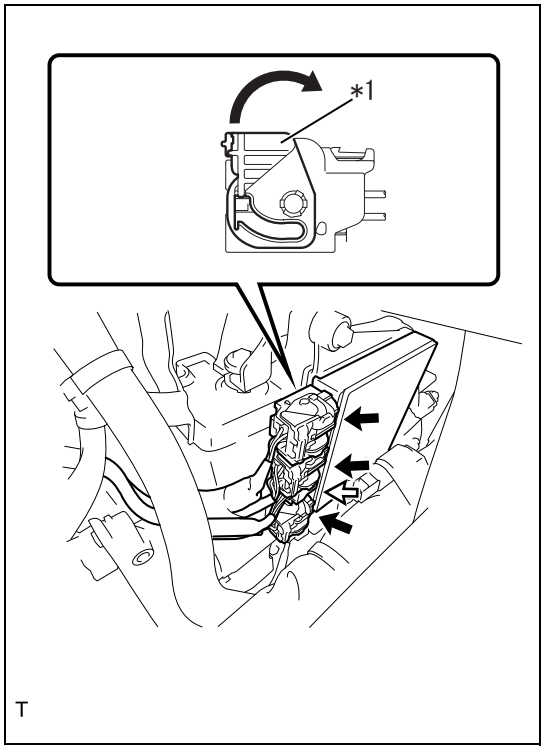

(x) Connect the three connectors with lock to the injector driver.
Move the lock lever as shown in the figure to lock the three connectors with lock.

Captions in illustration

*1	Lock lever
➡	Connector with lock
⇨	Normal connector

CAUTION:
For connector with lock, connect the connector securely to lock it.

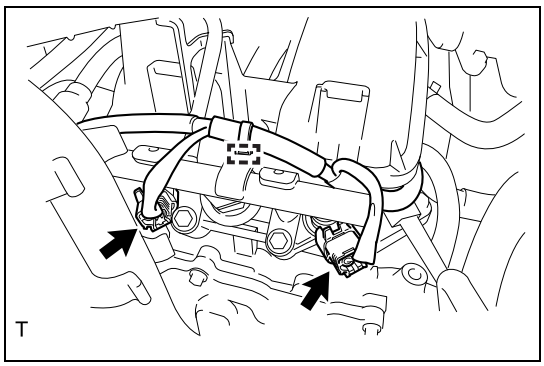

(y) Connect the two connectors of fuel injector.

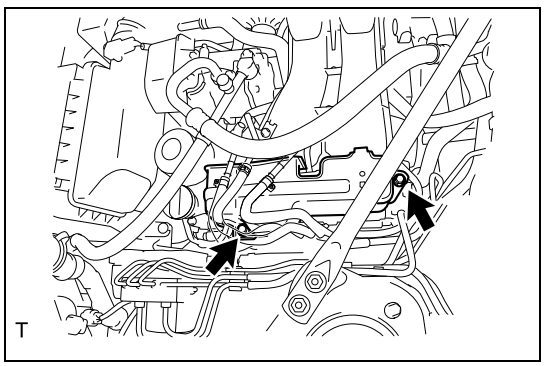

(z) Using 2 bolts, install the intake manifold protector (bank 2 side).
Standard value:T=19N·m {194kgf·cm} {14.0ft·lbf}

(aa) Reconnect the battery ground terminal.
Standard value:T=6.0N·m {61kgf·cm} {4.4ft·lbf}

(ab) Make sure that there is no influence on the engine startability and after the engine is started.

How to troubleshoot

NOTE:

The following is the flowchart to check the troubles of starter main body. For the vehicle with the smart entry & start system, check the smart entry & start system in advance to make sure that there is no fault is found in the smart entry & start system, and then perform the check according to the flowchart.

1	Bring in the car

Next

2	Interview and phenomenon check

(1) Does the engine start with one cranking?

Result

Result	Go to
Engine does not start	Check (2)
Engine starts this time but did not start in the past	Check (2)
Engine starts	B

(2) Does the engine crank normally?

Result

Result	Go to
Engine does not crank normally	A
Engine cranks normally this time but did not crank normally in the past	C
Engine cranks normally	B

ST

B → Starter normal

C → Go to Step 4.

A

3	Battery check

(1) Battery terminal check
  (a) Check the battery terminals for looseness and damage.
(2) Battery voltage check
  (a) To remove the voltage due to surface charging (ECU. capacitor etc.), turn the headlight switch to ON with IG OFF for about 20 or 30 seconds.
  (b) Measure the battery voltage between the terminals.
    Voltage: 12.5 V or more (Electrolyte temperature: 20°C)
(3) Battery electrolyte level check
  (a) Check the electrolyte level of each cell and refill distilled water or replace the battery if the level is below the LOW level.
(4) Battery electrolyte specific gravity check
  (a) Check the electrolyte specific gravity in each cell.
    Standard value: 1.25 to 1.29 (Electrolyte temperature: 20°C)

NG → Go to Step 5.

OK

4	Starter check

(1) Perform the On-vehicle inspection (Refer to ST - 3).

NG → Go to Step 6.

OK

Complete

5	Confirmation of past failure history

(1) Is there a symptom in which the engine could not be started or did not crank.

Result

Result	Go to
There was no such symptom	A
There was the symptom	B

B → Charge or replace the battery and then go to step 4

A

Charge or replace the battery to complete the check

6	Starter repair or replacement

Next

Complete

Circuit figure

- Without smart entry & start system

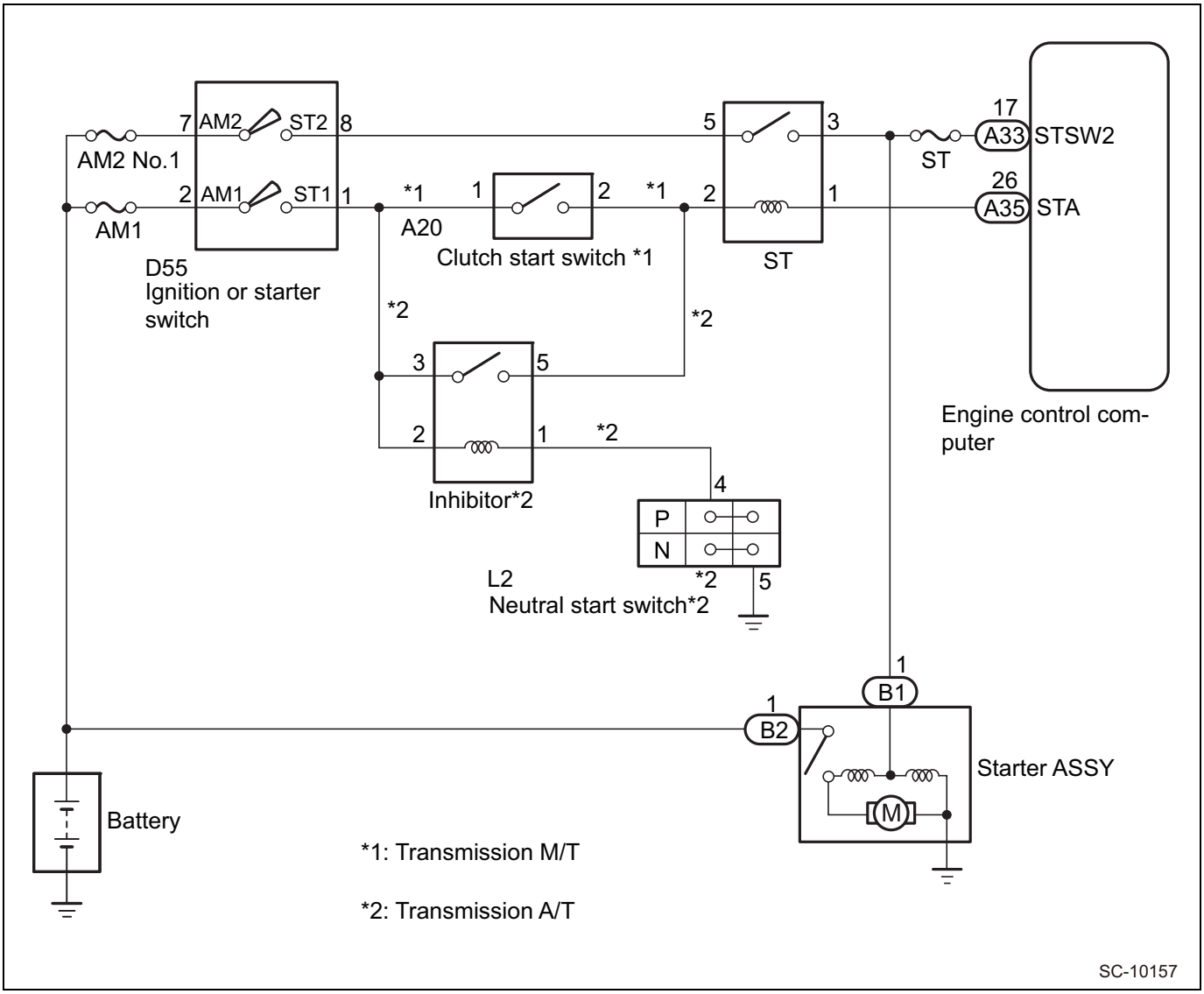

ST

- With smart entry & start system
  (Refer to TD - 139)

Key interlock system

Function inspection

1. Key interlock function check
   (1) Turn the ignition switch to ON.
   (2) Depress the brake pedal and place the shift lever in a position other than the P position.
   (3) Check that the ignition key cannot be turned to the LOCK position.
   (4) Place the shift lever in the P position and turn the ignition key to the LOCK position to check that the ignition key can be pull out.

Parts location

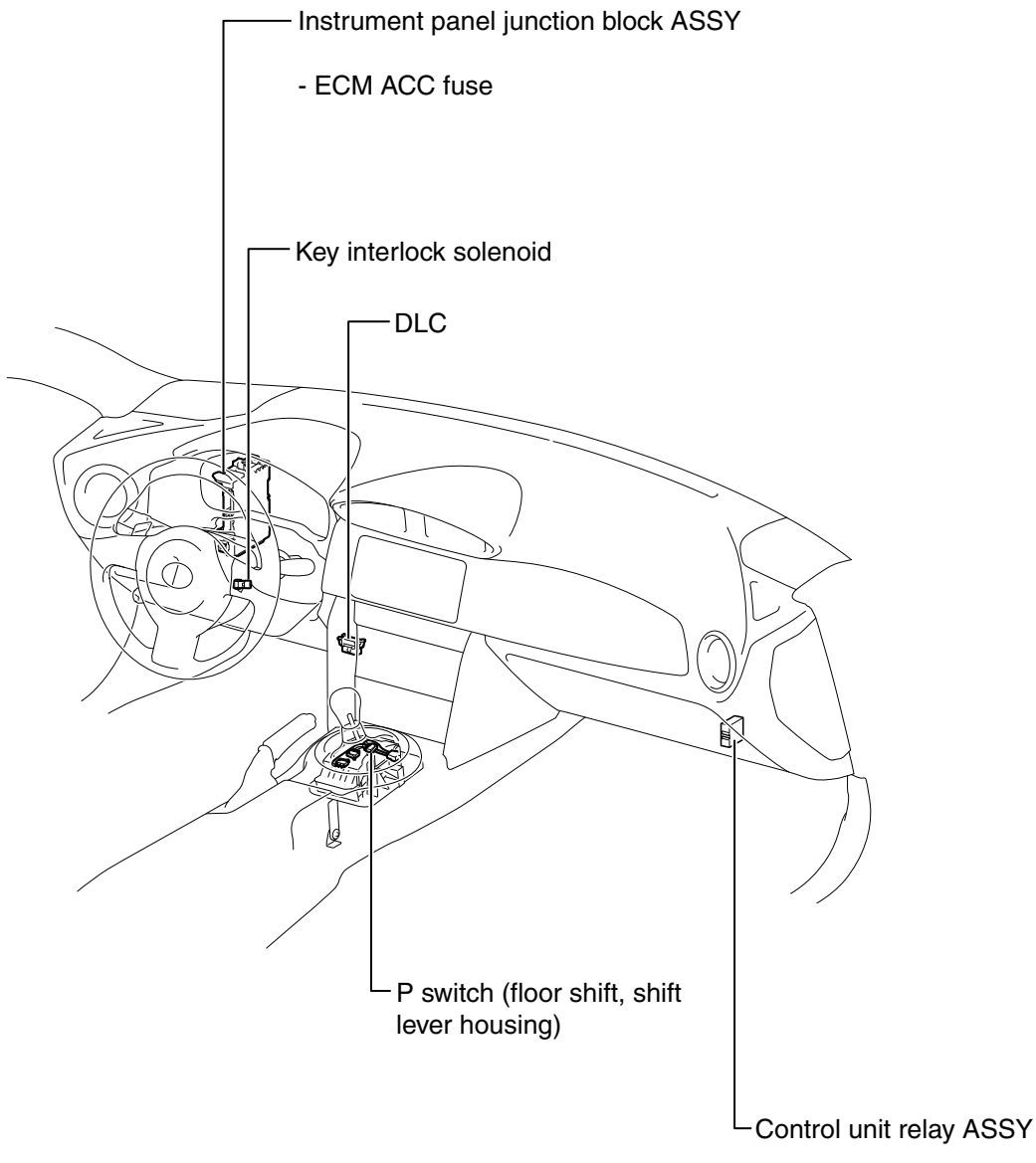

Symptom table

Key interlock system

Symptoms	Inspection items	Reference pages
Cannot remove or insert the key	Refer to troubleshooting flowchart "Cannot remove or insert the key."	ST - 14

Circuit figure

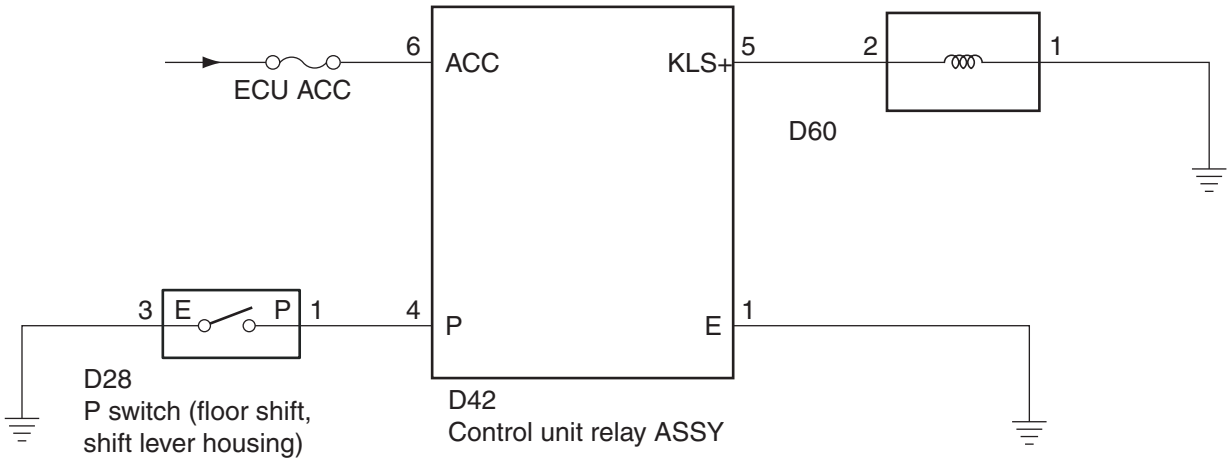

ST

Cannot remove or insert the key

Circuit description

The control unit relay ASSY outputs a signal to the key interlock solenoid when the ACC signal and P signal are input.

Circuit figure

For a circuit figure, refer to ST - 14.

Inspection steps

CAUTION:

Before performing troubleshooting, check the fuse for this circuit.

1	Check wiring harness and connector (ACC voltage)

NOTE:

For inspection procedures and precautions, refer to IN - 36.

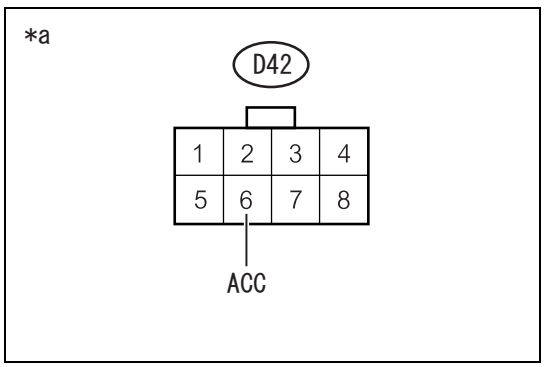

(1) Disconnect the connector D42 of control unit relay ASSY.

(2) Measure the voltage between the terminals.

Voltage

Inspection terminals	Inspection conditions	Standard value
D42-6 (ACC) - chassis ground	IG ON	11 to 14 V

Captions in illustration

*a	Front side of vehicle wiring harness connector (Control unit relay ASSY connecting connector)

NG	Repair or replacement of wiring harness or connector

OK

2	Check wiring harness and connector (control unit relay ASSY - chassis ground)

NOTE:
For inspection procedures and precautions, refer to IN - 36.
(1) Disconnect the connector D42 of control unit relay ASSY.
(2) Measure the resistance between the terminals.
Resistance

Inspection terminals	Inspection conditions	Standard value
D42-1 (E) - chassis ground	Always	Less than 1 Ω

NG → Repair or replacement of wiring harness or connector

OK

3	P switch (floor shift, shift lever housing) unit inspection

(1) Perform the P switch (floor shift, shift lever housing) unit inspection. (Refer to AT - 211)

NG → P switch (floor shift, shift lever housing) replacement (Refer to AT - 200)

OK

4	Check wiring harness and connector (control unit relay ASSY - P switch (floor shift, shift lever housing))

NOTE:
For inspection procedures and precautions, refer to IN - 36.
(1) Disconnect the connector D42 of control unit relay ASSY.
(2) Disconnect the connector D28 of P switch (floor shift, shift lever housing).
(3) Measure the resistance between the terminals.
Resistance (open circuit check)

Inspection terminals	Inspection conditions	Standard value
D42-4 (P) - D28-1 (P)	Always	Less than 1 Ω

Resistance (short circuit check)

Inspection terminals	Inspection conditions	Standard value
D42-4 (P) and D28-1 (P) - other terminals and chassis ground	Always	10 kΩ or more

NG → Repair or replacement of wiring harness or connector

OK

ST

5	Check wiring harness and connector (P switch (floor shift, shift lever housing) - chassis ground)

NOTE:
For inspection procedures and precautions, refer to IN - 36.
(1) Disconnect the connector D28 of P switch (floor shift, shift lever housing).
(2) Measure the resistance between the terminals.
Resistance

Inspection terminals	Inspection conditions	Standard value
D28-3 (E) - chassis ground	Always	Less than 1 Ω

NG → Repair or replacement of wiring harness or connector

OK

6	Key interlock solenoid check

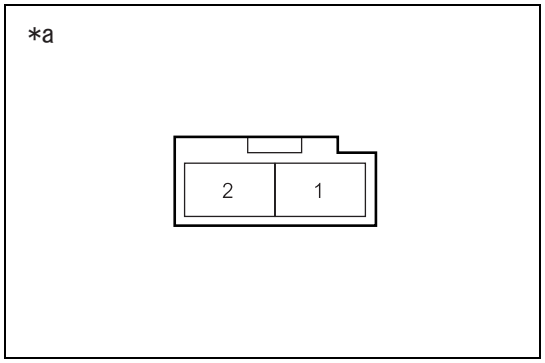

(1) Disconnect the connector D60 of key interlock solenoid.
(2) Measure the resistance between the terminals.
Resistance

Inspection terminals	Inspection conditions	Standard value
1 - 2	20°C	13.05 to 15.95Ω

Captions in illustration

*a	Connector not connected (Key interlock solenoid)

NG → Key interlock solenoid replacement (Refer to SR - 57)

OK

7	Check wiring harness and connector (control unit relay ASSY - key interlock solenoid)

NOTE:
For inspection procedures and precautions, refer to IN - 36.
(1) Disconnect the connector D42 of control unit relay ASSY.
(2) Disconnect the connector D60 of key interlock solenoid.
(3) Measure the resistance between the terminals.
Resistance (open circuit check)

Inspection terminals	Inspection conditions	Standard value
D42-5 (KLS+) - D60-2	Always	Less than 1 Ω

Resistance (short circuit check)

Inspection terminals	Inspection conditions	Standard value
D42-5 (KLS+) and D60-2 - other terminals and chassis ground	Always	10 kΩ or more

NG → Repair or replacement of wiring harness or connector

OK

8	Check wiring harness and connector (key interlock solenoid - chassis ground)

NOTE:
For inspection procedures and precautions, refer to IN - 36.
(1) Disconnect the connector D60 of key interlock solenoid.
(2) Measure the resistance between the terminals.
Resistance

Inspection terminals	Inspection conditions	Standard value
D60-1 - chassis ground	Always	Less than 1 Ω

NG → Repair or replacement of wiring harness or connector

OK

Control unit relay ASSY replacement (Refer to ST - 47)

Starter ASSY (FA20)

Exploded view

Transmission M/T:

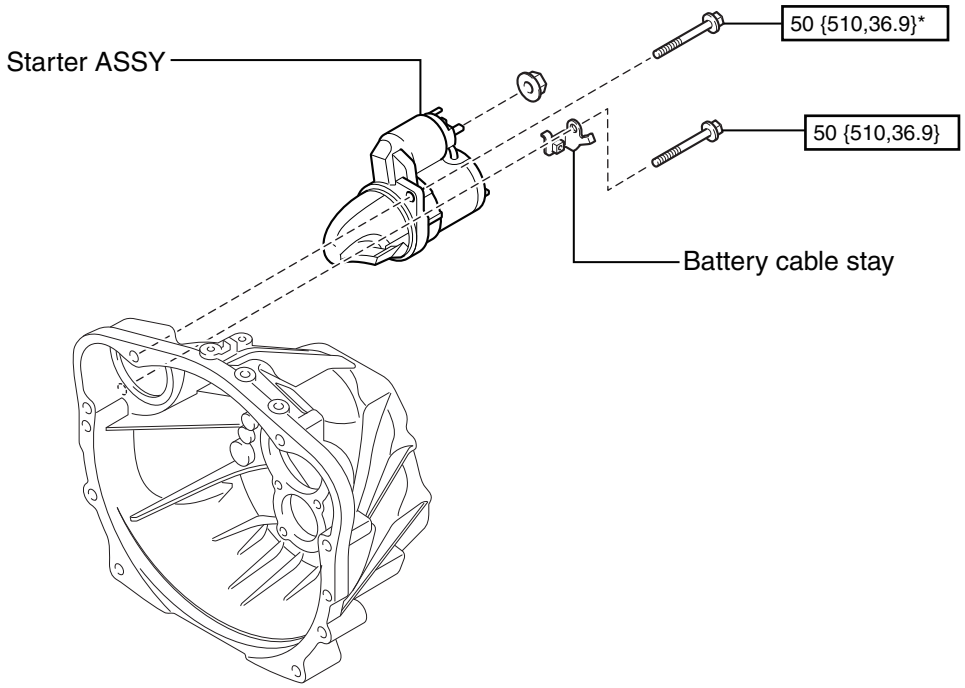

Transmission A/T:

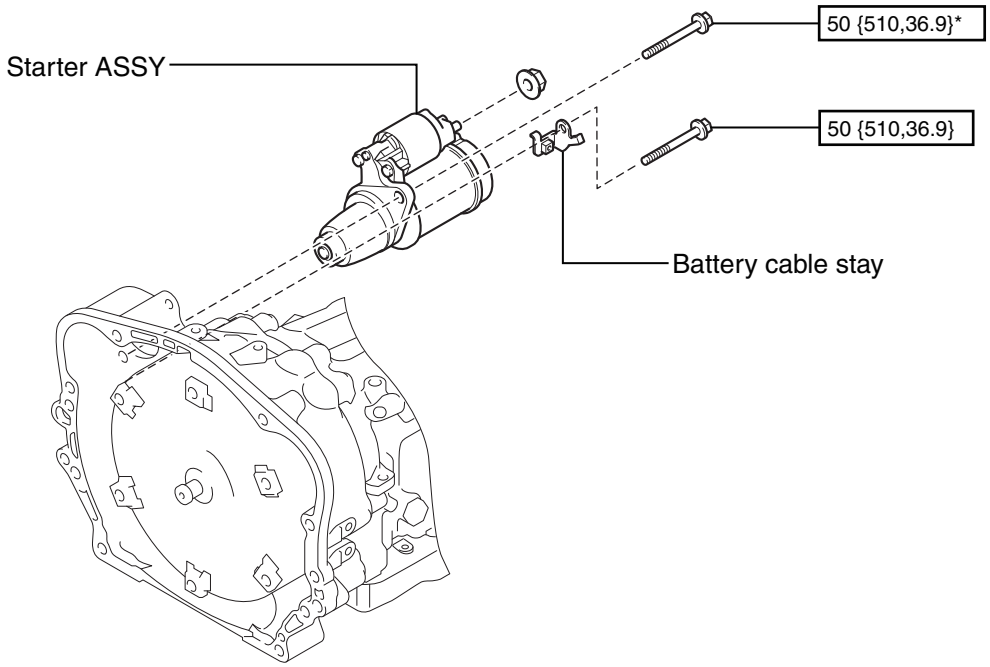

N•m {kgf•cm, ft•lbf} : Specified torque

* When using the SST, calculate the torque using the formula.

SC-02778

ST

for Manual Transmission:

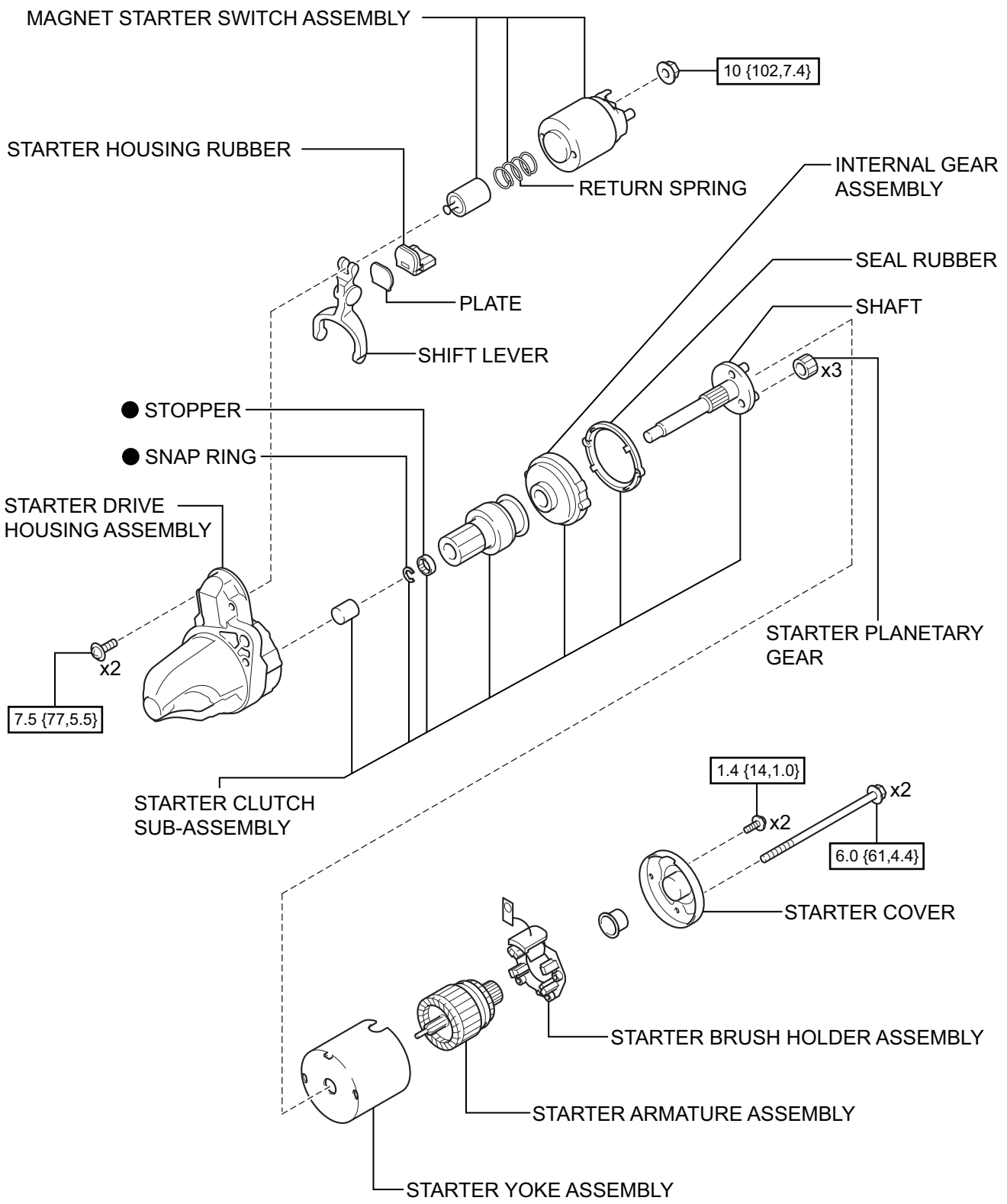

N*m {kgf*cm, ft*lbf} : Specified torque

● Non-reusable part

SC-02776

ST

for Automatic Transmission:

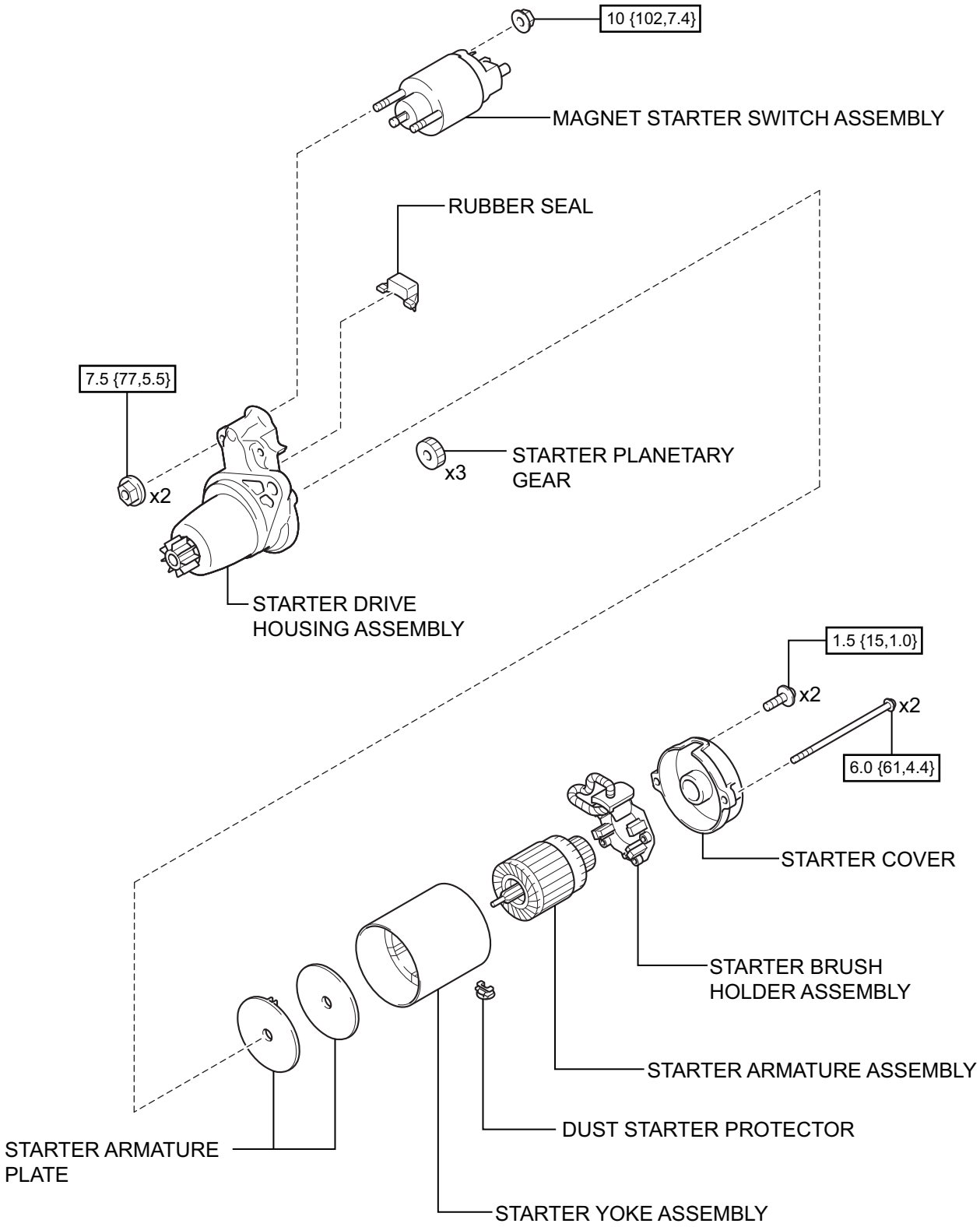

N*m {kgf*cm, ft*lbf} : Specified torque

SC-02777

ST

Removal

1. Disconnection of the battery ground terminal (Refer to IN - 6)
2. Removal of exhaust pipe ASSY FR (Refer to IE - 41)
3. DISCONNECT ENGINE WIRE
   NOTE:
   Fix the disconnected harness components with tape to keep them out of the way.

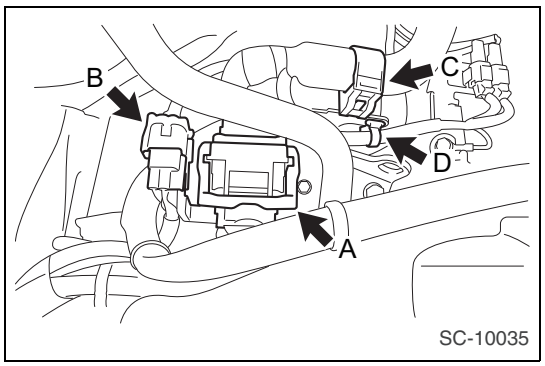

(1) Release the lock of connector (A) and disconnect the connector.

(2) Disconnect the connector (B).

(3) Remove the wiring harness clamp (C) and clip (D).

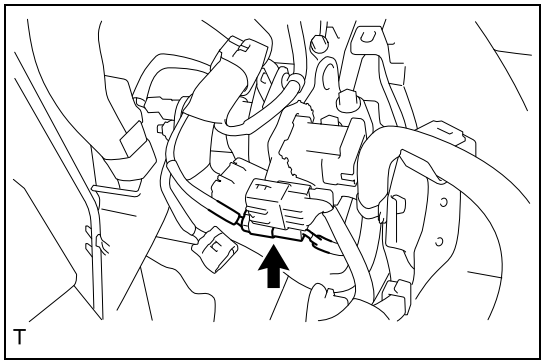

(4) Disconnect the connector.

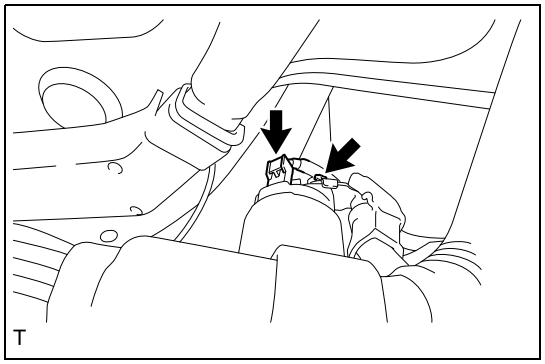

4. Removal of starter ASSY
   (1) Disconnect the connector and terminal from the starter ASSY.

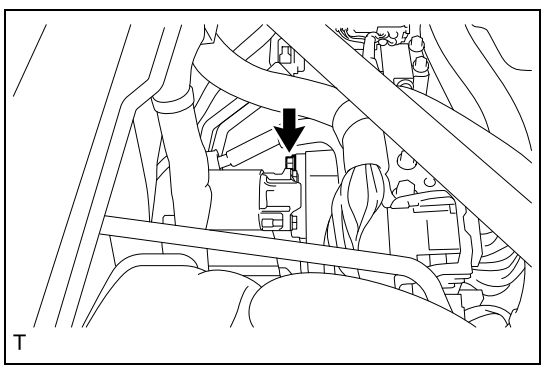

(2) Remove the upper mounting bolt.

ST

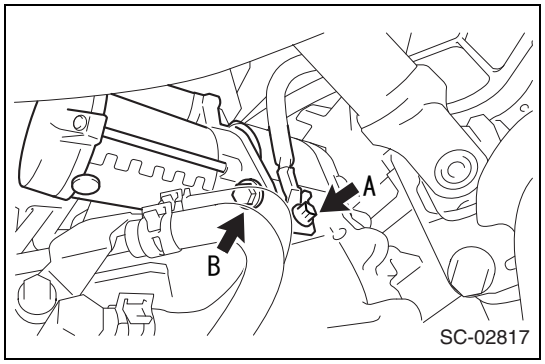

(3) Remove the lower mounting bolt.
1. Remove the ground cable fixing bolt A.
CAUTION:
When removing the ground cable, make sure to secure the stay.
2. Remove the lower mounting bolt B.
3. Remove the starter ASSY.

DISASSEMBLY

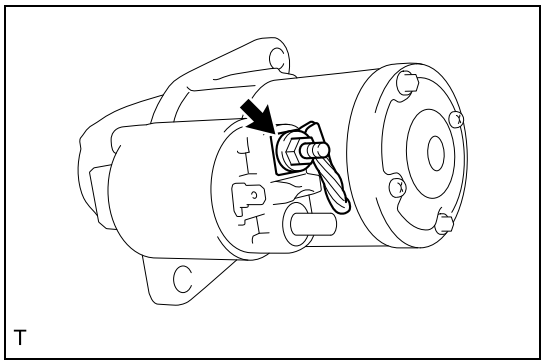

1. REMOVE MAGNET STARTER SWITCH ASSEMBLY(for Manual Transmission)
(1) Remove the nut and disconnect the lead wire from terminal M.

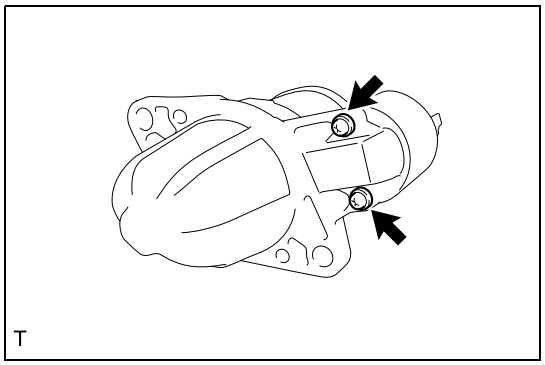

(2) Remove the 2 screws and the magnet starter switch assembly from the starter drive housing assembly.

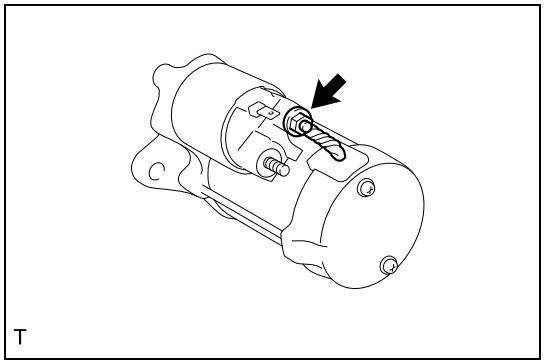

2. REMOVE MAGNET STARTER SWITCH ASSEMBLY(for Automatic Transmission)
(1) Remove the nut and disconnect the lead wire from terminal M.

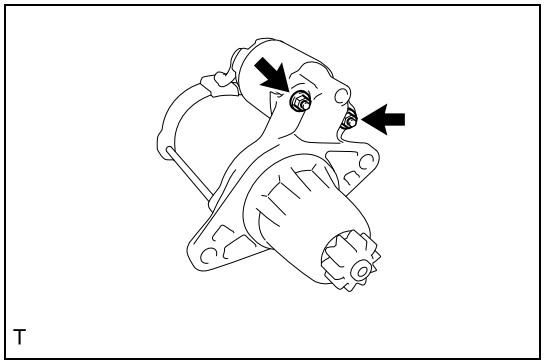

(2) Remove the 2 nuts and the magnet starter switch assembly from the starter drive housing assembly.

3. REMOVE STARTER YOKE ASSEMBLY (for Automatic Transmission)
(1) Using a "TORX" socket wrench T25, remove the 2 through bolts.

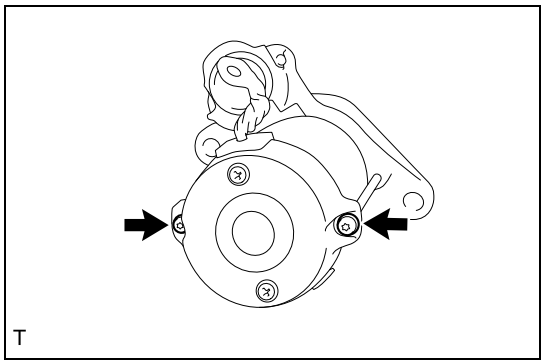

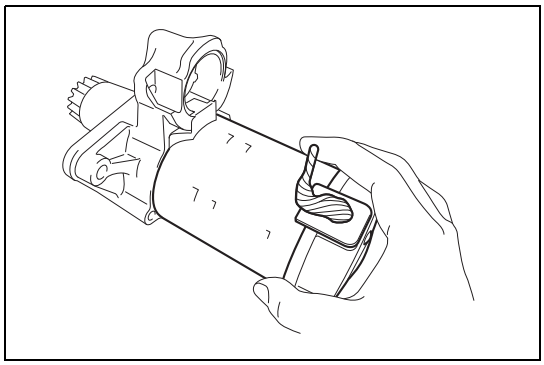

(2) Remove the starter yoke assembly and starter cover from the starter drive housing assembly.

4. REMOVE STARTER COVER (for Manual Transmission)
(1) Remove the 2 through bolts and 2 screws, and remove the starter cover.

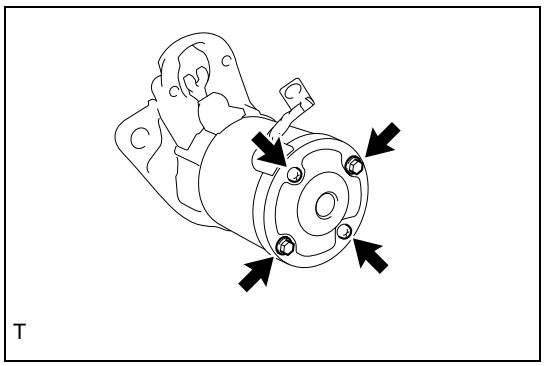

5. REMOVE STARTER COVER (for Automatic Transmission)
(1) Remove the 2 screws.

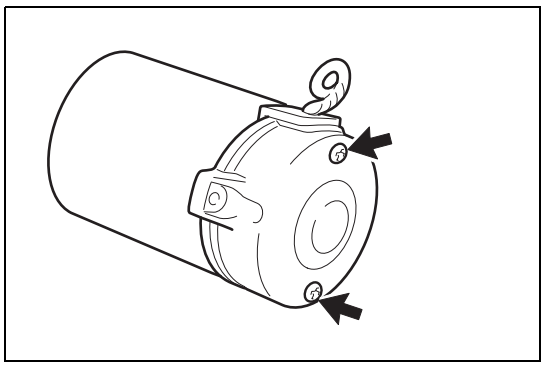

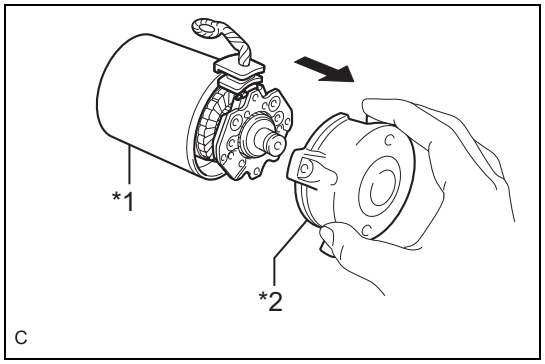

(2) Remove the starter cover from the starter yoke assembly.

Text in Illustration

*1	Starter Yoke Assembly
*2	Starter Cover

CAUTION:
Hold the lead wire and remove the starter cover.

(3) Remove the dust starter protect from the starter yoke assembly.

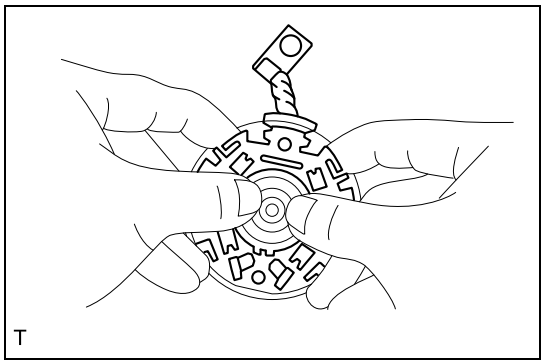

6. REMOVE STARTER BRUSH HOLDER ASSEMBLY(for Manual Transmission)
   (1) Remove the starter brush holder assembly.
   NOTE:
   Hold the brush with your fingers so that the brush spring does not come flying out.

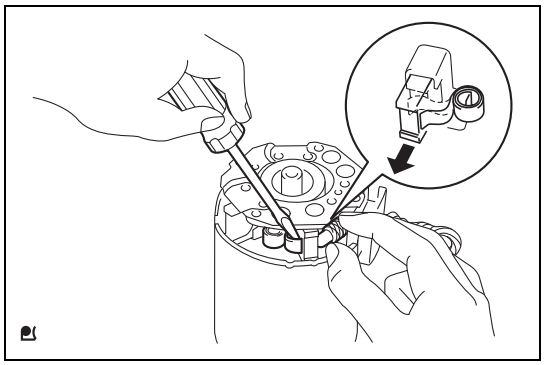

7. REMOVE STARTER BRUSH HOLDER ASSEMBLY(for Automatic Transmission)
   (1) Using a screwdriver, disengage the spring from the bush.
   (2) Disconnect the 4 brush from the starter brush holder assembly.
   (3) Remove the starter brush holder assembly.

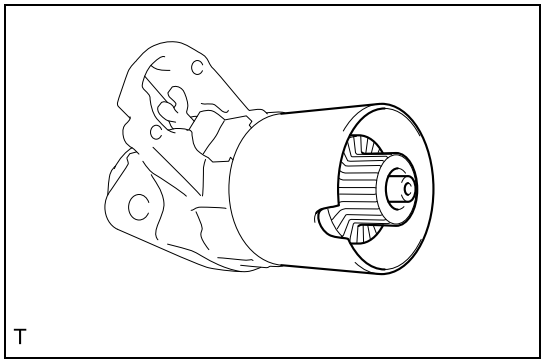

8. REMOVE STARTER YOKE ASSEMBLY (for Manual Transmission)
   (1) Remove the starter yoke assembly and starter armature assembly together from the starter drive housing assembly.

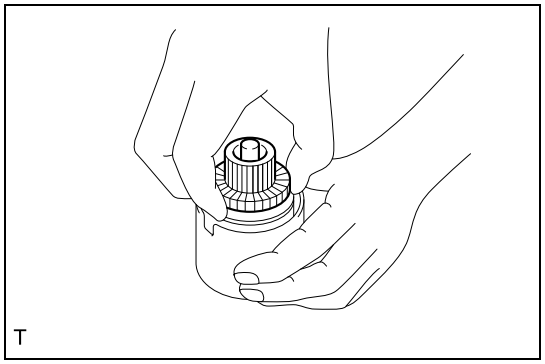

9. REMOVE STARTER ARMATURE ASSEMBLY (for Manual Transmission)
   (1) Pull out the starter armature assembly from the starter yoke assembly.

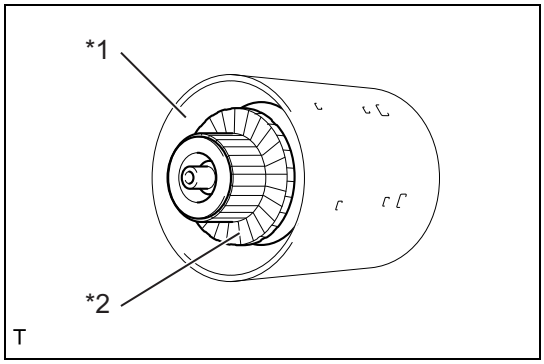

10. REMOVE STARTER ARMATURE ASSEMBLY (for Automatic Transmission)
    (1) Pull out the starter armature assembly from the starter yoke assembly.
    Text in Illustration

*1	Starter Yoke Assembly
*2	Starter Armature Assembly

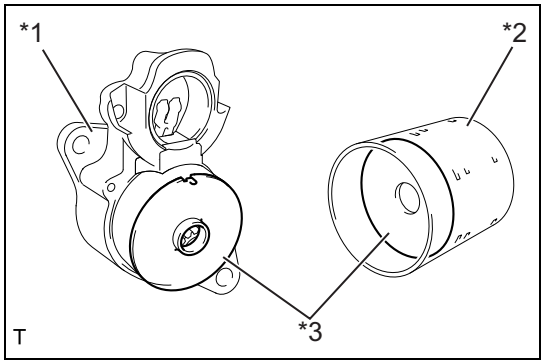

11. REMOVE STARTER ARMATURE PLATE (for Automatic Transmission)
    (1) Remove the starter armature plate from the starter yoke assembly and starter drive housing assembly.
    Text in Illustration

*1	Starter Drive Housing Assembly
*2	Starter Yoke Assembly
*3	Starter Armature Plate

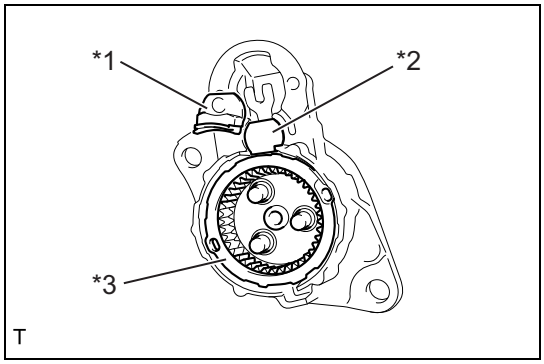

12. REMOVE STARTER HOUSING RUBBER (for Manual Transmission)
    (1) Remove the starter housing rubber, seal rubber and plate from the starter drive housing assembly.
    Text in Illustration

*1	Starter Housing Rubber
*2	Plate
*3	Seal Rubber

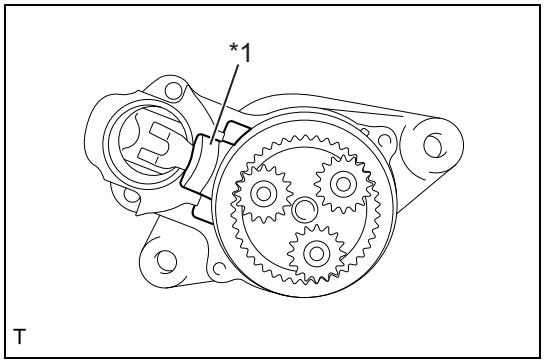

13. REMOVE RUBBER SEAL (for Automatic Transmission)
    (1) Remove the rubber seal from the starter drive housing assembly.
    Text in Illustration

*1	Rubber Seal

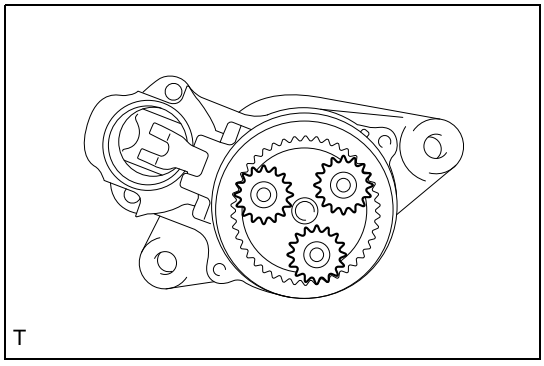

14. REMOVE STARTER PLANETARY GEAR
    (1) Remove the 3 starter planetary gears from the starter clutch subassembly.

ST

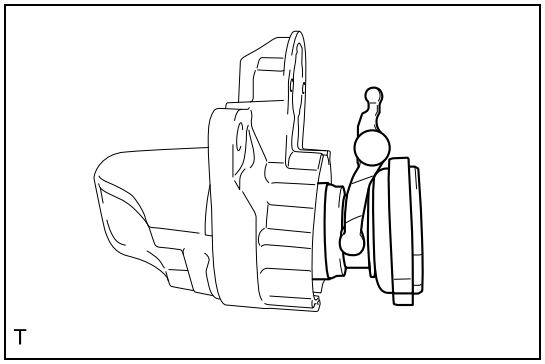

15. REMOVE STARTER CLUTCH SUB-ASSEMBLY (for Manual Transmission)
    (1) Remove the starter clutch sub-assembly together with the drive lever set pin from the starter drive housing assembly.

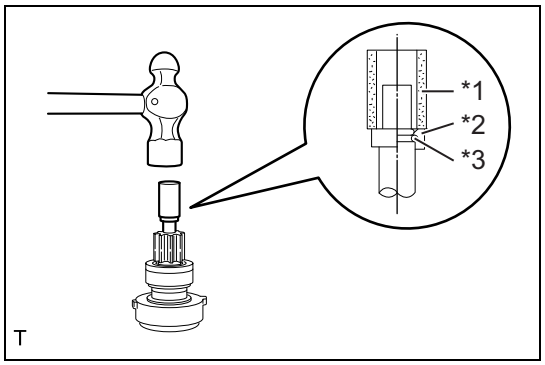

    (2) Using a deep socket wrench, remove the stopper from snap ring.
    Text in Illustration

*1	Deep Socket Wrench
*2	Stopper
*3	Snap Ring

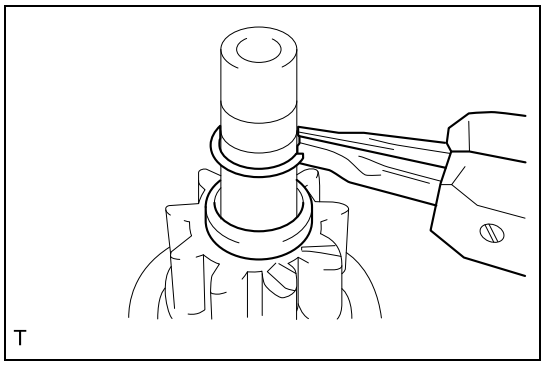

    (3) Using snap ring pliers, remove the snap ring and stopper.

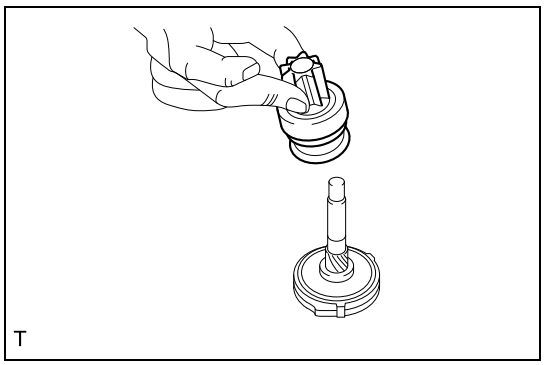

    (4) Pull out the over running clutch from the shaft.

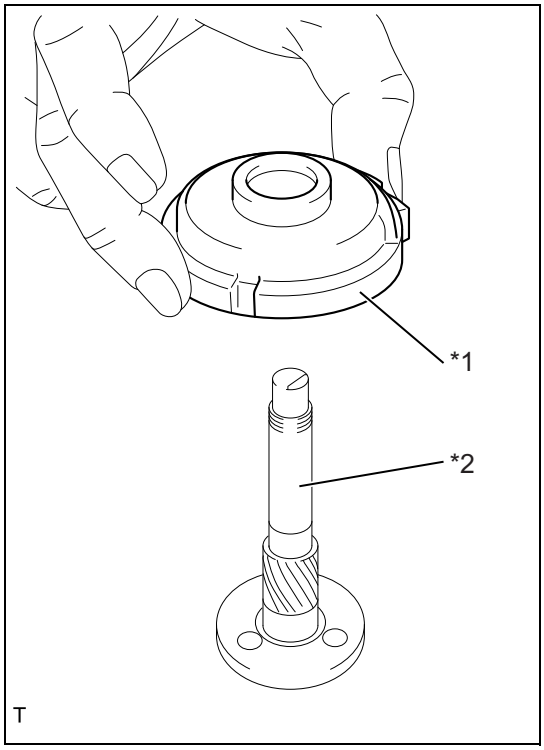

(5) Remove the internal gear assembly from the shaft.
Text in Illustration

*1	Internal Gear Assembly
*2	Shaft

INSPECTION

1. INSPECT STARTER ASSEMBLY

WARNING:
As a large electric current passes through the cable during this inspection, a thick cable must be used. If not, the cable may become hot and cause injury.
CAUTION:
The following tests must each be performed within 3 to 5 seconds to prevent the coil from burning out.

(1) Mount the starter in a vise between aluminum plates.

(2) Perform a pull-in test.

(a)Remove the nut, and then disconnect the lead wire from terminal M.

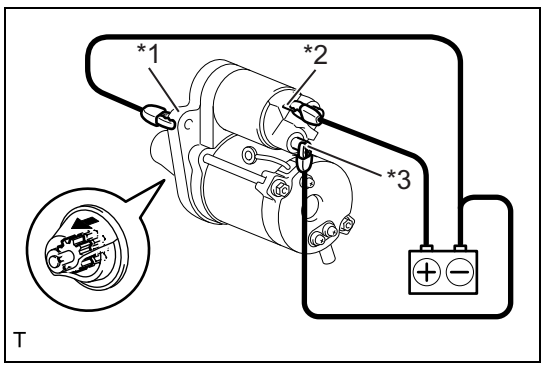

(b)Connect the battery to the starter as shown in the illustration. Check that the clutch pinion gear extends.

Text in Illustration

*1	Body
*2	Terminal B
*3	Terminal M

If the clutch pinion gear does not move, inspect the magnet starter switch assembly. If the magnet starter switch assembly is not as specified, replace it.

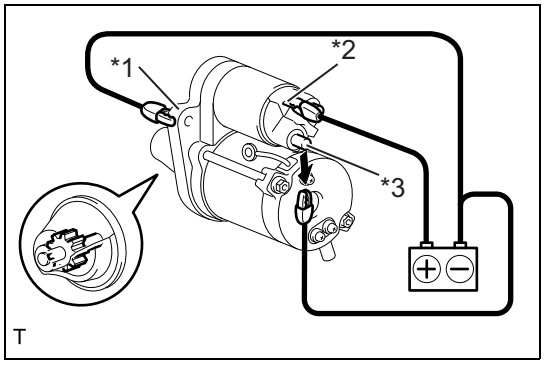

(3) Perform a holding test.

(a)Disconnect the negative (-) terminal lead from terminal M while the conditions specified in the pull-in test above are maintained. Check that the pinion gear remains out.

Text in Illustration

*1	Body
*2	Terminal B
*3	Terminal M

If the clutch pinion gear returns inward, inspect the magnet starter switch assembly. If the magnet starter switch assembly is not as specified, replace it.

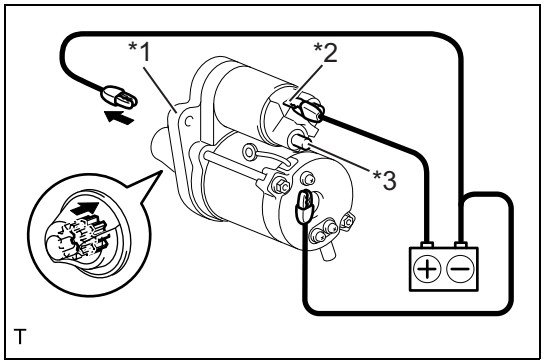

(4) Inspect the clutch pinion gear return.
(a) Disconnect the negative (-) terminal lead from the starter body. Check that the clutch pinion gear returns inward.

Text in Illustration

*1	Body
*2	Terminal B
*3	Terminal M

If the clutch pinion gear does not return inward, inspect the magnet starter switch assembly. If the magnet starter switch assembly is not as specified, replace it.

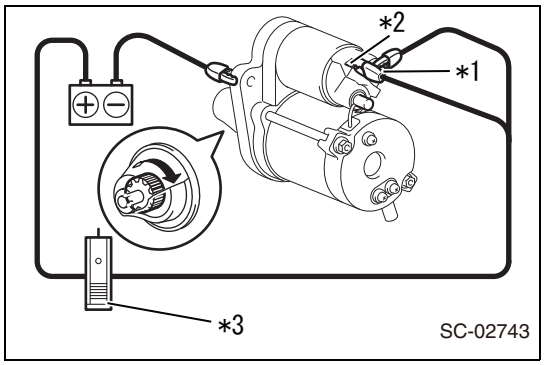

(5) Perform an operation test without load.
(a) Connect the lead wire to terminal C with the nut.
Standard value: T=10N·m {102kgf·cm} {7.4ft·lbf}
(b) Connect the battery and an ammeter to the starter as shown in the illustration.

Text in Illustration

*1	Terminal S
*2	Terminal B
*3	Ammeter

(c) Check that the starter rotates smoothly and steadily while the clutch pinion gear is extended. Then measure the current.
Standard Current

Tester Connection	Condition	Specified Condition
Battery positive terminal - Terminal B - Terminal M	11.5 V	Below 90 A

If the result is not as specified, inspect the starter assembly.
NOTE:
Inspect the starter armature assembly, starter commutator end frame assembly and magnet starter switch assembly. If there is a malfunction, replace the part and perform again this test.

2. INSPECT STARTER ARMATURE ASSEMBLY (for Manual Transmission)
(1) Check the commutator for signs of seizure or stepped wear caused by roughness of the surface. If there is light wear, use sandpaper to repair.

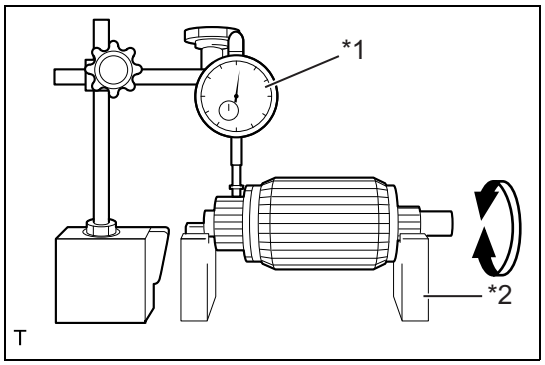

(2) Check for runout on the commutator. If excessive, replace the armature.
Standard runout: 0.05 mm (0.002 in.)
Maximum runout: 0.10 mm (0.004 in.)

Text in Illustration

*1	Dial Gauge
*2	V-block

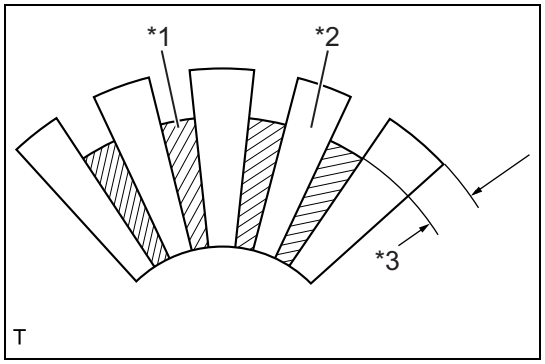

(3) Check the depth of the segment mold. If it is not within the standard, replace the armature.
Standard depth: 0.05 mm (0.002 in.)

Text in Illustration

*1	Mold
*2	Segment
*3	Depth of Mold

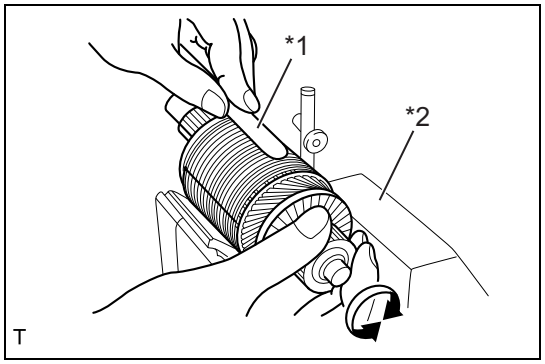

(4) Place the armature on the growler tester to check for short circuits. While slowly turning the armature, support the steel sheet for the armature core. If the circuit of the armature is shorted, the steel sheet will vibrate, causing it to move towards the core. When the steel sheet has moved or vibrated, replace the armature.

Text in Illustration

*1	Steel Sheet
*2	Growler Tester

(5) Touch the probe of one side to the commutator segment, and the other probe to the shaft. If there is continuity, replace the armature.

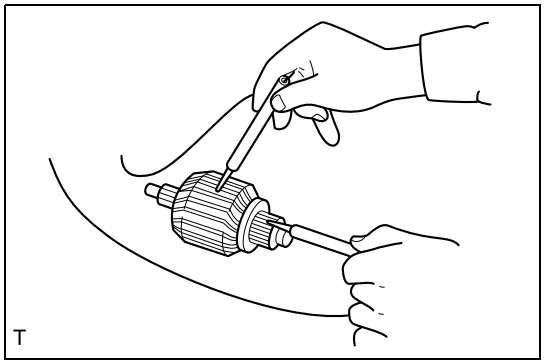

3. INSPECT STARTER ARMATURE ASSEMBLY (for Automatic Transmission)

(1) Check the commutator for dirt and/or burns on the surface. If the surface is dirty or burnt, correct it with sandpaper (No. 400) or a lathe. If necessary,replace the starter armature assembly.

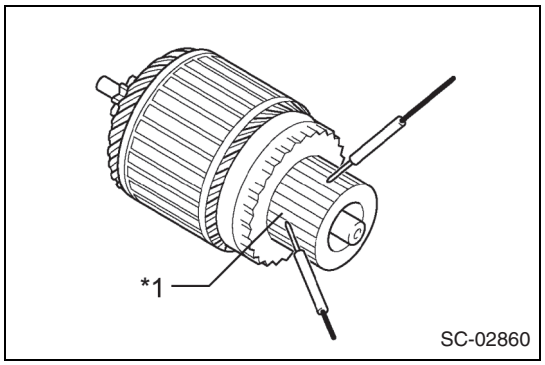

(2) Inspect the commutator for an open circuit.
(a)Measure the resistance according to the value(s) in the table below.

Text in Illustration

*1	Segment

Standard Resistance

Tester Connection	Condition	Specified Condition
Segment - Segment	Always	Below 1 Ω

If the result is not as specified, replace the starter armature assembly.

ST

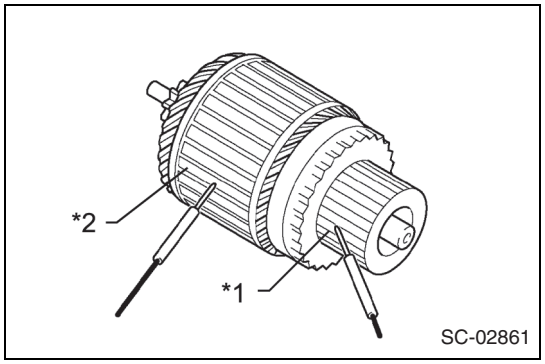

(3) Inspect the commutator for short circuits.
(a)Measure the resistance according to the value(s) in the table below.

Text in Illustration

*1	Segment
*2	Coil Core

Standard Resistance

Tester Connection	Condition	Specified Condition
Segment - Coil core	Always	10 kΩ or higher

If the result is not as specified, replace the starter armature assembly.

(4) Check the commutator for signs of seizure or stepped wear caused by roughness of the surface. If there is light wear, use sandpaper to repair.

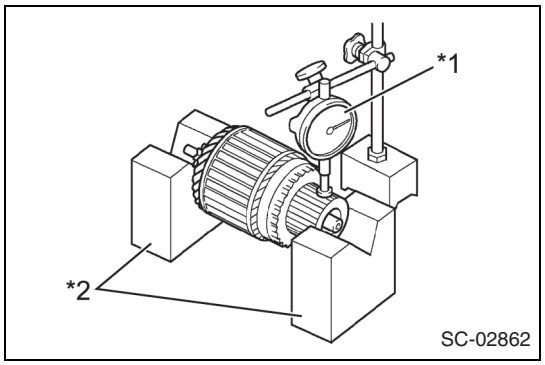

(5) Check for runout on the commutator. If excessive,replace the armature.
Standard runout: 0.02 mm (0.0008 in.)
Maximum runout: 0.05 mm (0.002 in.)

Text in Illustration

*1	Dial Gauge
*2	V-block

If the result is not as specified, replace the starter armature assembly.

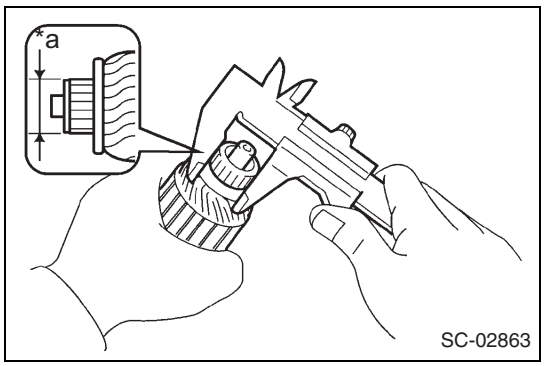

(6) Using vernier caliper, measure the commutator diameter.

Text in Illustration

*a	Diameter

Standard diameter: 29 mm (1.1417 in.)
Minimum diameter: 28 mm (1.1024 in.)
If the diameter is less than the minimum, replace the starter armature assembly.

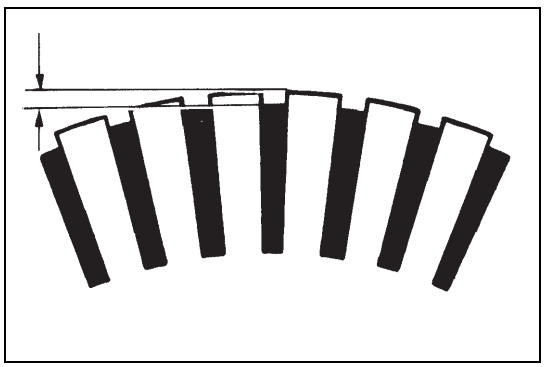

(7) Using vernier caliper, measure the under cut depth of the segment. If it is not within the standard, replace the starter armature assembly.
Standard depth: 0.7 mm (0.0276 in.)
Minimum depth: 0.2 mm (0.0079 in.)

4. INSPECT STARTER YOKE ASSEMBLY (for Manual Transmission)
(1) Make sure that the pole is set at the predetermined position.
5. INSPECT STARTER BRUSH HOLDER ASSEMBLY(for Manual Transmission)
(1) Visually check the brush. If there is any abnormal wear or cracks, replace the brush.

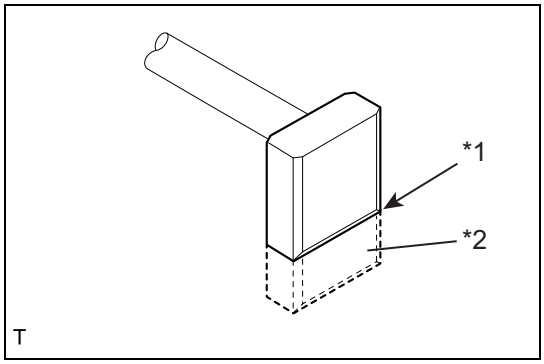

(2) Measure the length of the brush. If it exceeds the service limits, replace the brush.
Standard length: 12.3 mm (0.484 in.)
Minimum length: 7.0 mm (0.276 in.)

Text in Illustration

*1	Service Limit Line
*2	Brush

(3) Check that the brush moves smoothly in the brush holder.

(4) Measure the brush spring force with a spring scale. Replace the brush holder if below the service limit.
Standard brush spring force: 15.9 to 19.5 N (1.6 to 2.0 kgf, 3.6 to 4.4 lbf)
Minimum brush spring force: 2.5 N (0.3 kgf, 0.6 lbf)

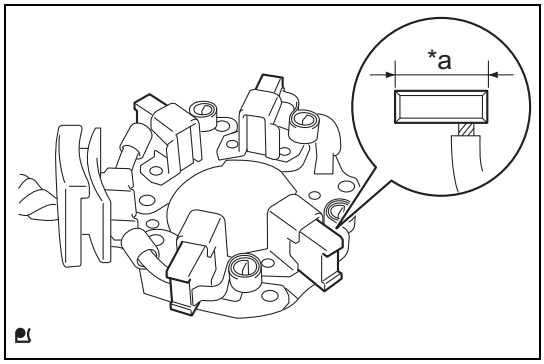

6. INSPECT STARTER BRUSH HOLDER ASSEMBLY (for Automatic Transmission)

(1) Using a vernier caliper, measure the brush length.
Text in Illustration

*a	Length

Standard length: 14.4 mm (0.5669 in.)
Minimum length: 9.0 mm (0.3543 in.)
If the length is less than the minimum, replace the starter brush holder assembly.

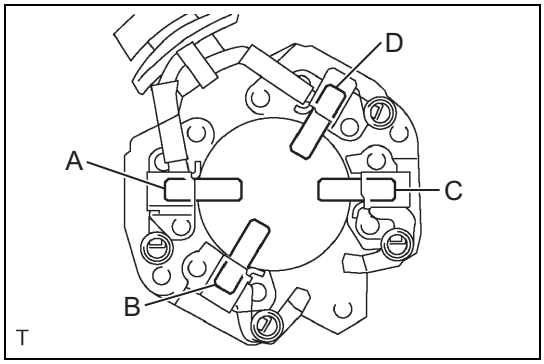

(2) Measure the resistance according to the value(s) in the table below.

Standard Resistance

Tester Connection	Condition	Specified Condition
A - BA - CB - DC - D	Always	10 kΩ or higher
A - DB - C	Always Below	1 Ω

If the result is not as specified, replace the starter brush holder assembly.

7. INSPECT STARTER CLUTCH SUB-ASSEMBLY (for Manual Transmission)

(1) Check the gear teeth on the planetary gear, internal gear and starter clutch for wear or damage.
If any of the gears is damaged, replace the starter center bearing clutch sub-assembly.

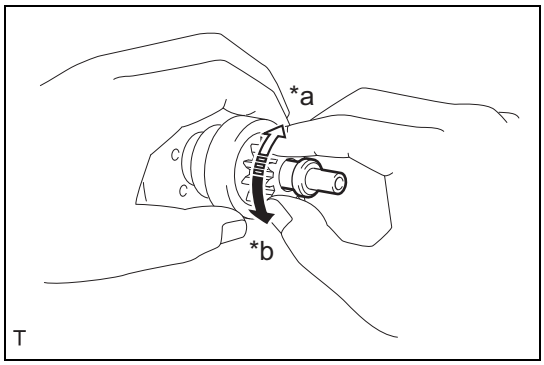

(2) Check the starter clutch pinion gear.

(a) Hold the starter clutch, rotate the pinion gear clockwise and check that it turns freely. Try to rotate the pinion gear counter-clockwise and check that it locks.

Text in Illustration

*a	Free
*b	Lock

If necessary, replace the starter clutch subassembly.

ST

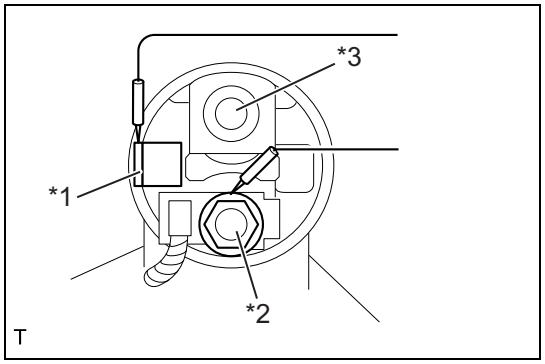

8. INSPECT MAGNET STARTER SWITCH ASSEMBLY(for Manual Transmission)
   (1) Check that there is continuity between terminals 50 and C, and between terminal 50 and ground. Also, check to be sure there is no continuity between terminal C and 30.
   Standard Resistance

Tester Connection	Condition	Specified Condition
Terminal M - Terminal B	Always	Below 1 Ω
Terminal B - Switch body	Always	Below 1 Ω
Terminal M - Terminal S	Always	1 M Ωor higher

Text in Illustration

*1	Terminal B
*2	Terminal M
*3	Terminal S

   (2) Using a lead wire, connect the switch assembly terminal 50 to the positive terminal of the battery, and the starter body to the ground terminal of the battery. The pinion should be forced to be pushed out on the shaft.
   NOTE:
   With the pinion forced to be pushed out on the shaft, the starter motor can sometimes rotate because the current flows, through pull-in coil, to motor. This is not a problem.

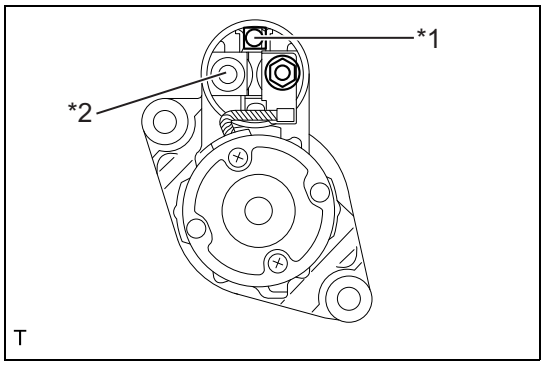

   (3) Disconnect the connector from terminal M. Then, using a lead wire, connect the positive terminal of the battery and terminal M, and ground terminal to starter body. In this test set up, the pinion should return to its original position even when it is pulled out with a screwdriver.

Text in Illustration

*1	Terminal B
*2	Terminal M

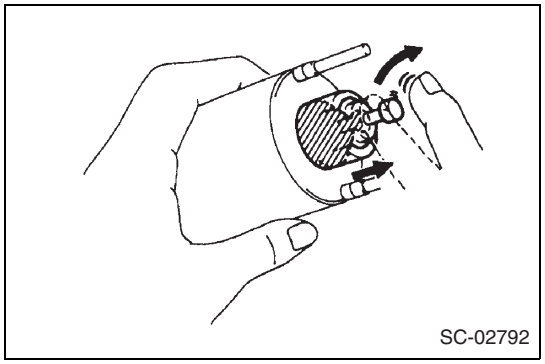

9. INSPECT MAGNET STARTER SWITCH ASSEMBLY(for Automatic Transmission)
   (1) Check the plunger.
      (a)Push in the plunger and check that it returns quickly to it is original position.
      If necessary, replace the magnet starter switch assembly.

ST

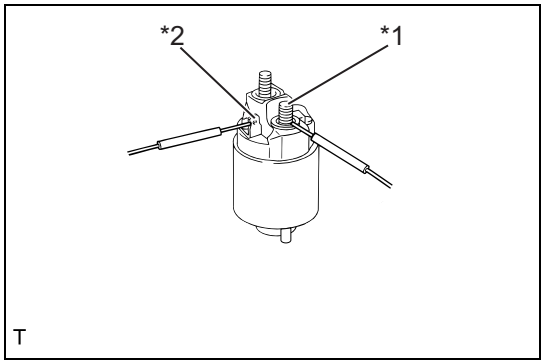

(2) Inspect the pull-in coil.
(a)Measure the resistance according to the value(s) in the table below.

Standard Resistance

Tester Connection	Condition	Specified Condition
Terminal M - Terminal B	Always	Below 1 Ω

Text in Illustration

*1	Terminal M
*2	Terminal B

If the result is not as specified, replace the magnet starter switch assembly.

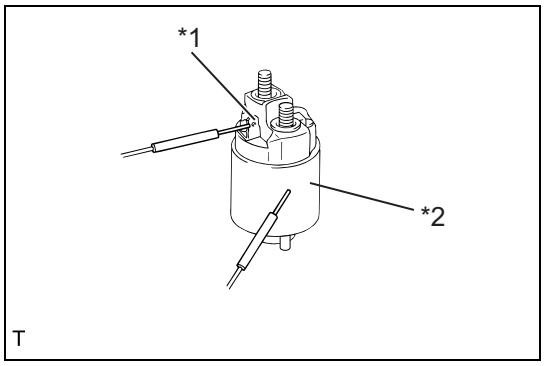

(3) Inspect the holding coil.
(a)Measure the resistance according to the value(s) in the table below.

Standard Resistance

Tester Connection	Condition	Specified Condition
Terminal B - Switch body	Always	Below 2 Ω

Text in Illustration

*1	Terminal B
*2	Switch Body

If the result is not as specified, replace the magnet starter switch assembly.

REASSEMBLY

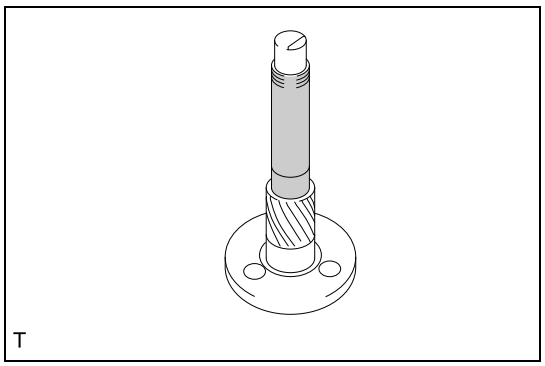

1. INSTALL STARTER CLUTCH SUB-ASSEMBLY (for Manual Transmission)
(1) Apply grease to the shaft as shown in the illustration.

Text in Illustration

▭	Multemp #6129 or equivalent

ST

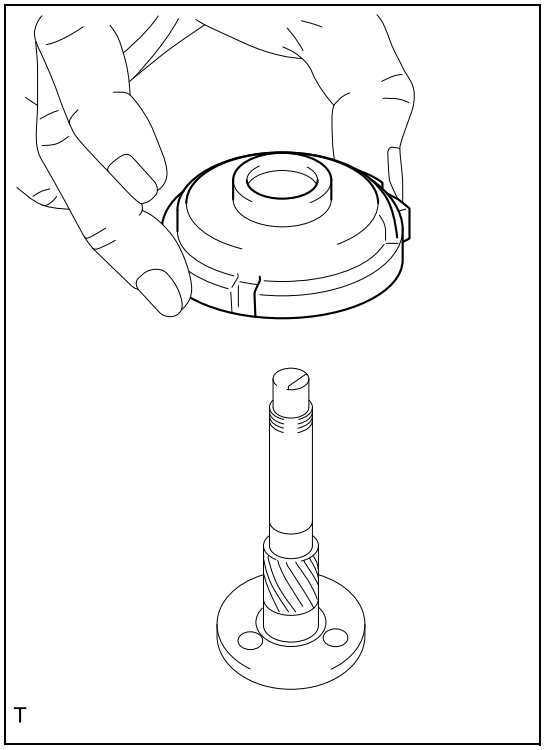

(2) Install the internal gear to the shaft.

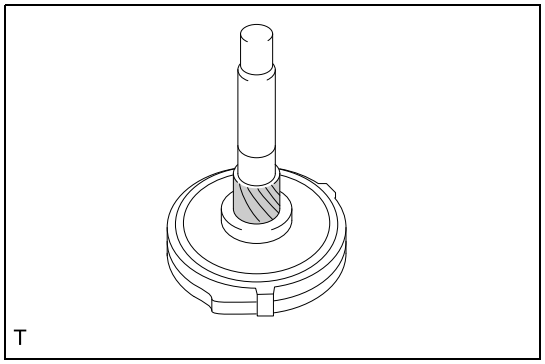

(3) Apply grease to the shaft as shown in the illustration.

Text in Illustration

	Multemp #6129 or equivalent

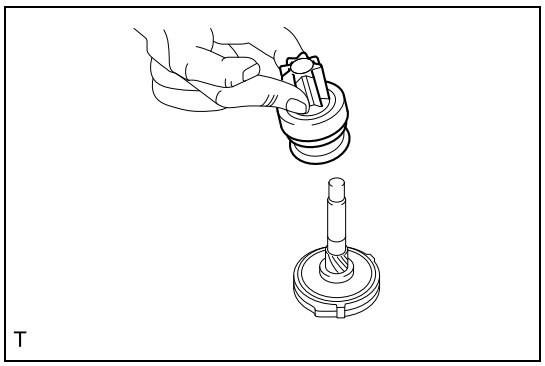

(4) Install the over running clutch to the shaft.

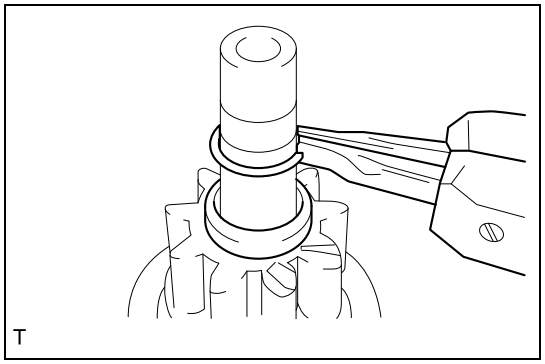

(5) Install the stopper to the shaft.
Using snap ring pliers, install the snap ring.

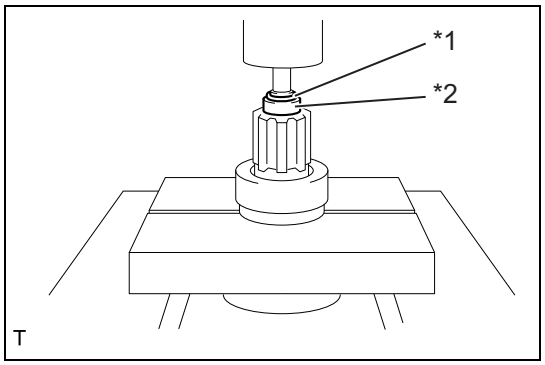

(6) Using a press, press the snap ring into the stopper.
Text in Illustration

*1	Snap Ring
*2	Stopper

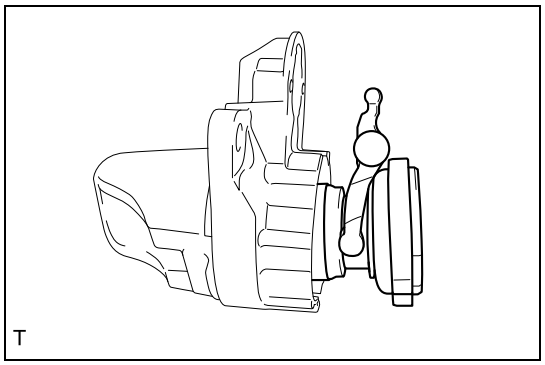

(7) Install the starter clutch sub-assembly together with the drive lever set pin to the starter drive housing assembly.

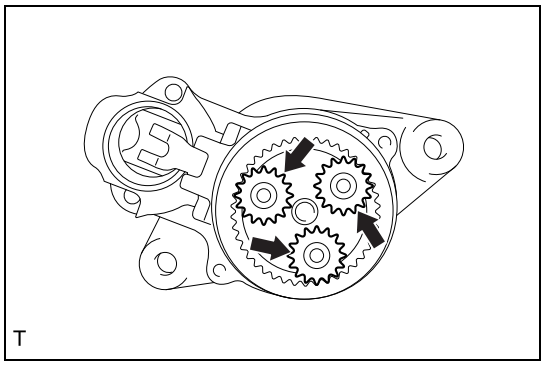

2. INSTALL STARTER PLANETARY GEAR (for Manual Transmission).
(1) Apply high-temperature grease to the planetary gears and pins of the planetary shaft.
(2) Install the 3 starter planetary gears.
Text in Illustration

➡	Multemp #6129 or equivalent

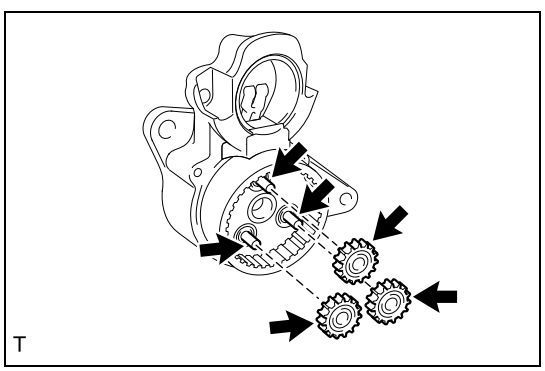

3. INSTALL STARTER PLANETARY GEAR (for Automatic Transmission)
(1) Apply high-temperature grease to the planetary gears and pins of the planetary shaft.
(2) Install the 3 starter planetary gears.
Text in Illustration

➡	Denso HL50 or equivalent

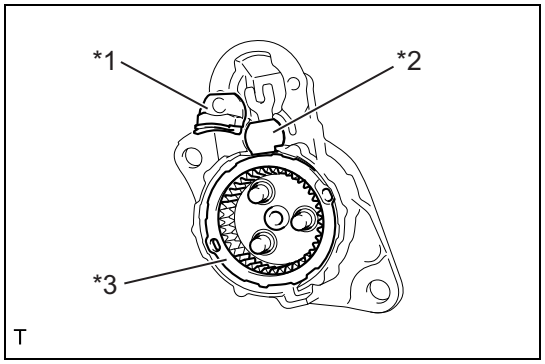

4. INSTALL STARTER HOUSING RUBBER (for Manual Transmission)
   (1) Install the starter housing rubber, seal rubber and plate to the starter drive housing assembly.
   Text in Illustration

*1	Starter Housing Rubber
*2	Plate
*3	Seal Rubber

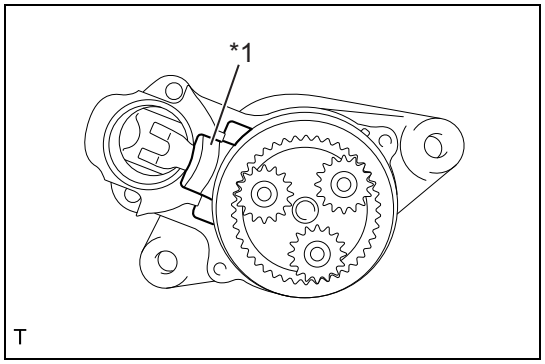

5. INSTALL RUBBER SEAL (for Automatic Transmission)
   (1) Install the rubber seal to the starter drive housing assembly.
   Text in Illustration

*1	Rubber Seal

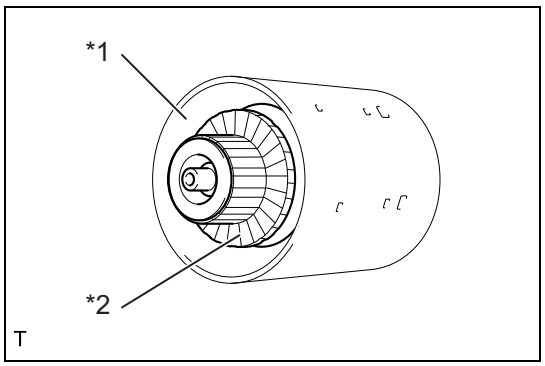

6. INSTALL STARTER ARMATURE ASSEMBLY (for Automatic Transmission)
   (1) Install the starter armature assembly to the starter yoke assembly.
   Text in Illustration

*1	Starter Yoke Assembly
*2	Starter Armature Assembly

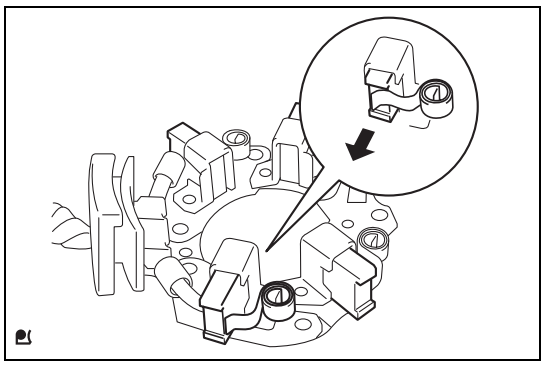

7. INSTALL STARTER BRUSH HOLDER ASSEMBLY (for Automatic Transmission)
   (1) Install the 4 brushes and 4 brush springs.

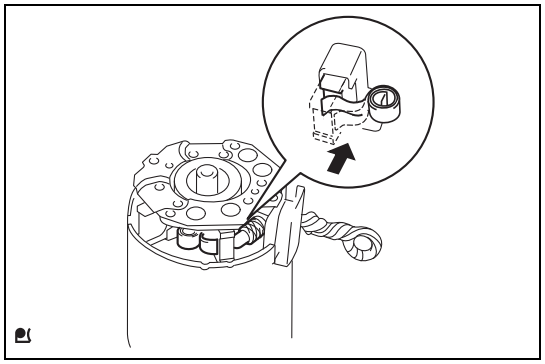

(2) Install the starter brush holder assembly to the starter armature assembly. Push the 4 brushes.

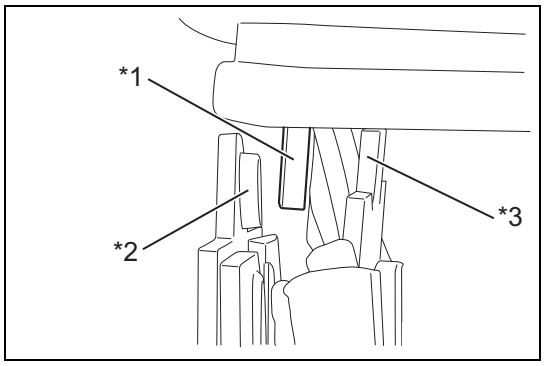

(3) Insert the grommet between the positive (+) motor read wire and the negative (-) brush holder plate.
Text in Illustration

*1	Grommet
*2	Negative (-) Brush Holder Plate
*3	Positive (+) Motor Read Wire

ST

8. INSTALL STARTER COVER (for Automatic Transmission)
(1) Install the dust starter protector to the starter yoke assembly.

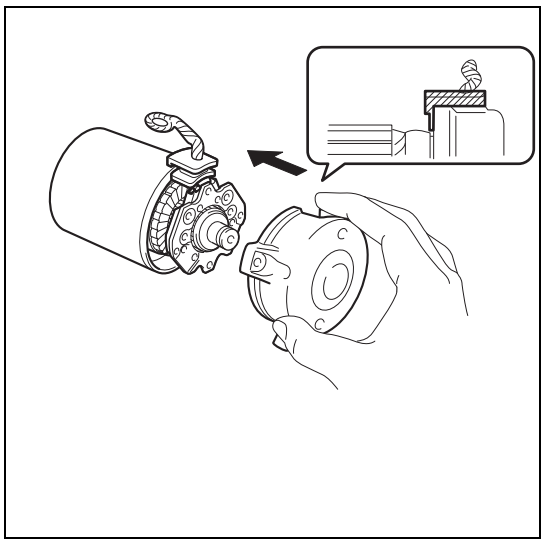

(2) Align the starter brush holder assembly read wire rubber with the groove of the starter cover.

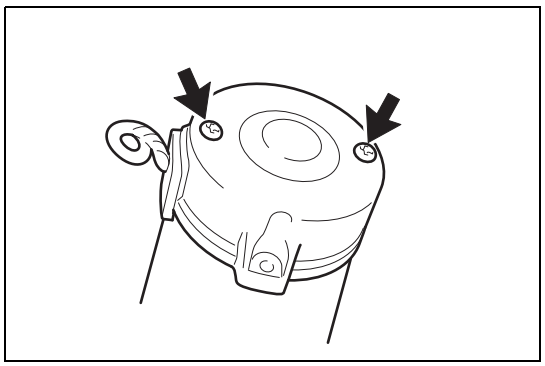

(3) Install the starter cover to the starter brush holder assembly with 2 screws.
Standard value:T=1.5N·m {15kgf·cm} {1.1ft·lbf}

9. INSTALL STARTER ARMATURE PLATE (for Automatic Transmission)
(1) Align the claw of the starter yoke assembly with the groove the starter armature plate.

(2) Install the starter armature plate to the starter yoke assembly.

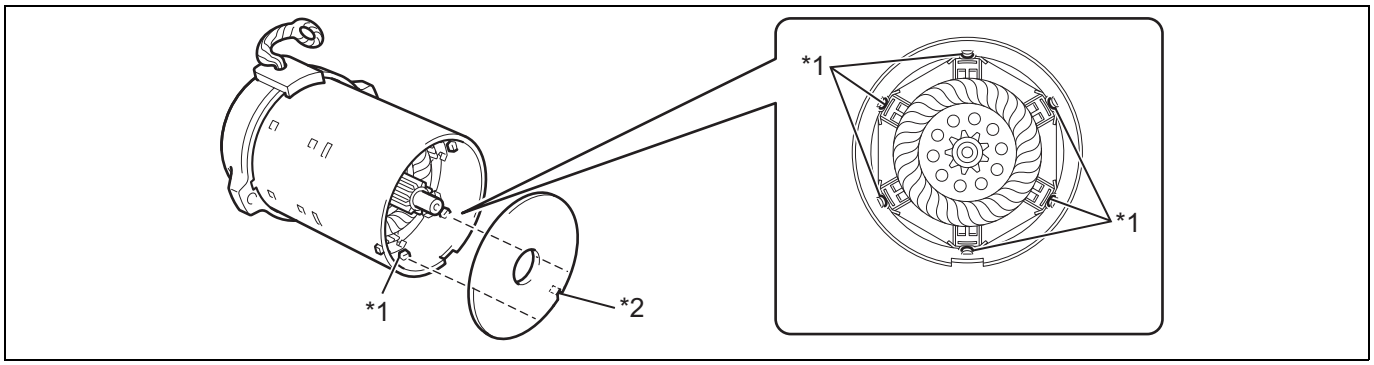

Text in Illustration

*1	Grommet	*2	Groove

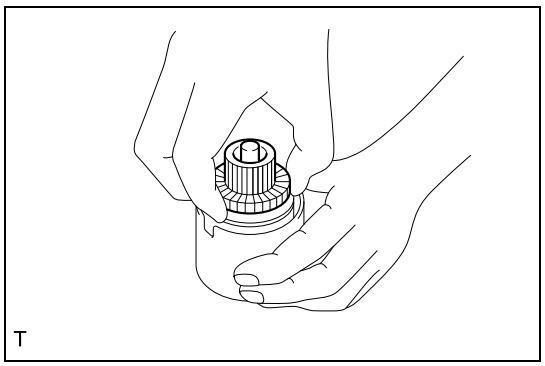

10. INSTALL STARTER ARMATURE ASSEMBLY (for Manual Transmission)
    (1) Install the starter armature assembly to the starter yoke assembly.

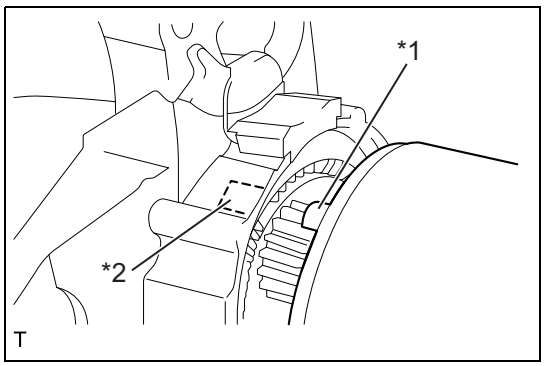

11. INSTALL STARTER YOKE ASSEMBLY (for Manual Transmission)
    (1) Align the claw of the starter yoke assembly with the groove inside the starter drive housing assembly.
    Text in Illustration

*1	Claw
*2	Groove

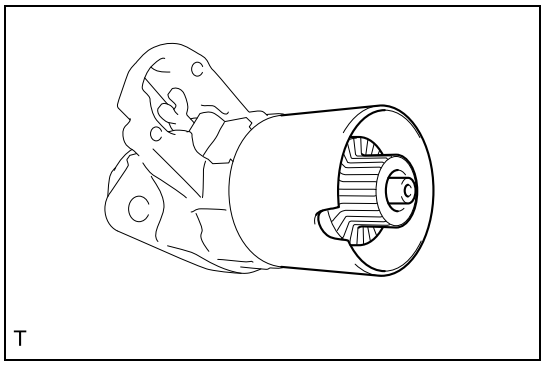

(2) Install the starter yoke assembly together with the starter armature assembly to the starter drive housing assembly.

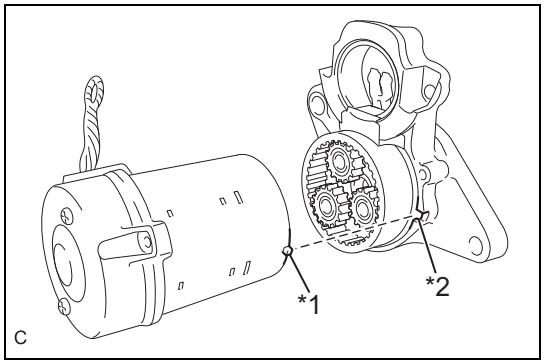

12. INSTALL STARTER YOKE ASSEMBLY (for Automatic Transmission)
    (1) Align the claw of the starter yoke assembly with the groove inside the starter drive housing assembly. Install the starter yoke assembly together with the starter armature assembly to the starter drive housing assembly.
    Text in Illustration

*1	Claw
*2	Groove

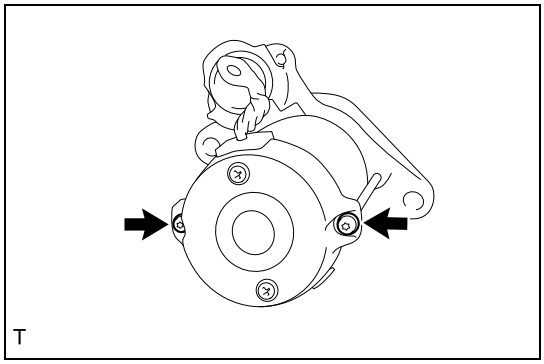

    (2) Using a "TORX" socket wrench T25, install the 2 through bolts.
    Standard value:T=6.0N·m {61kgf·cm} {4.4ft·lbf}

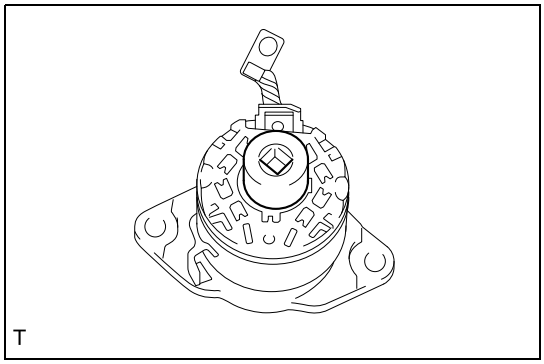

13. INSTALL STARTER BRUSH HOLDER ASSEMBLY (for Manual Transmission)
    (1) Install a socket to the starter brush holder assembly.
    (2) Install the starter brush holder assembly to the starter armature assembly.

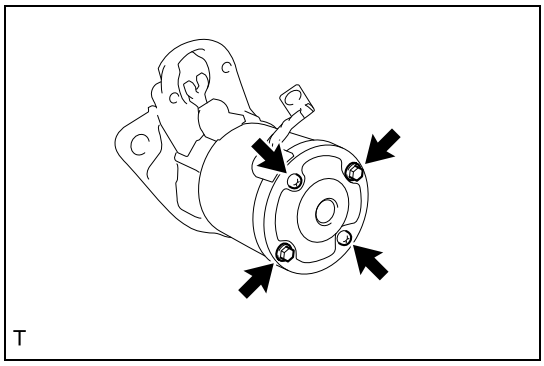

14. INSTALL STARTER COVER (for Manual Transmission)
    (1) Install the starter cover with 2 screws and 2 bolts.
    Torque: Bolt 6.0 N·m {61 kgf·cm} {4.4ft·lbf}
    Screw 1.4 N·m {14 kgf·cm} {1.0ft·lbf}

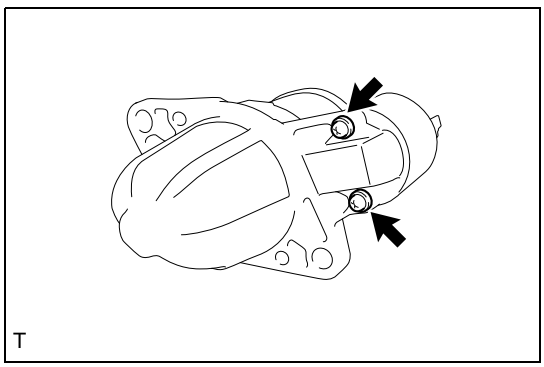

15. INSTALL MAGNET STARTER SWITCH ASSEMBLY (for Manual Transmission)
    (1) Install the magnet starter switch assembly with the 2 screws.
    Standard value:T=7.5N·m {77kgf·cm} {5.5ft·lbf}

ST

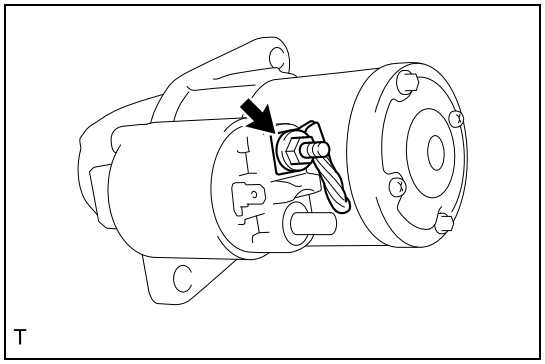

(2) Connect the lead wire to terminal C with the nut.
Standard value:T=10N·m {102kgf·cm} {7.4ft·lbf}

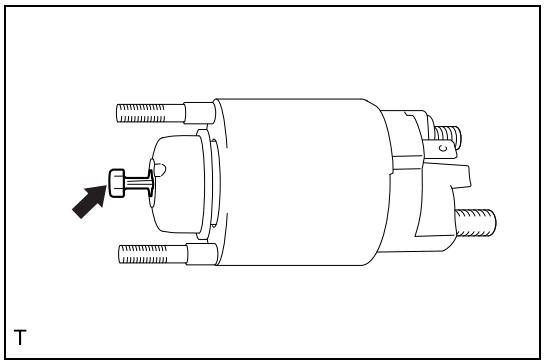

16. INSTALL MAGNET STARTER SWITCH ASSEMBLY (for Automatic Transmission)
(1) Apply grease to the plunger and hook as shown in the illustration.
Text in Illustration

➡	Denso HL50 or equivalent

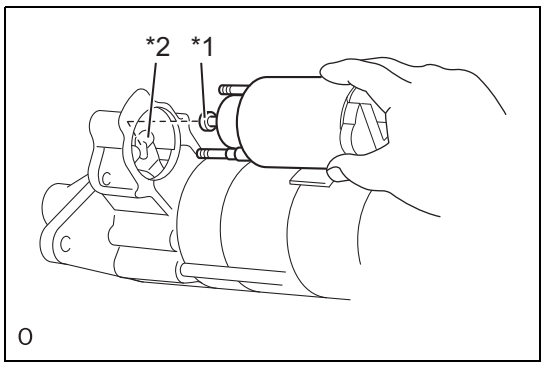

(2) Hook the plunger and hook of the magnet starter switch assembly to the lever of the starter drive housing assembly.
Text in Illustration

*1	Plunger and Hook
*2	Lever

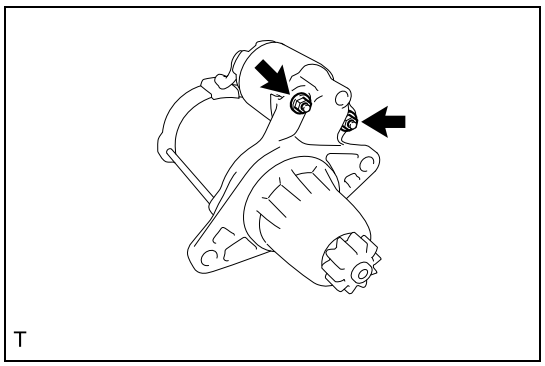

(3) Install the magnet starter switch assembly with the 2 screws.
Standard value:T=7.5N·m {77kgf·cm} {5.5ft·lbf}

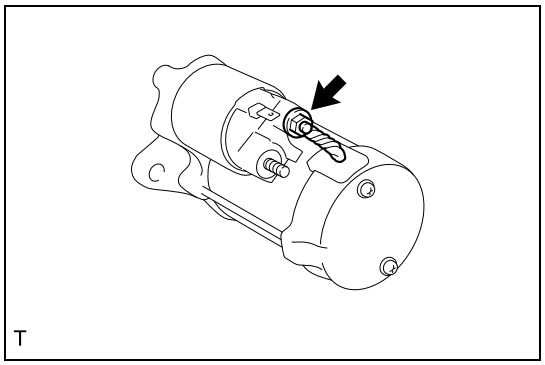

(4) Connect the lead wire to terminal C with the nut.
Standard value:T=10N·m {102kgf·cm} {7.4ft·lbf}

ST

Installation

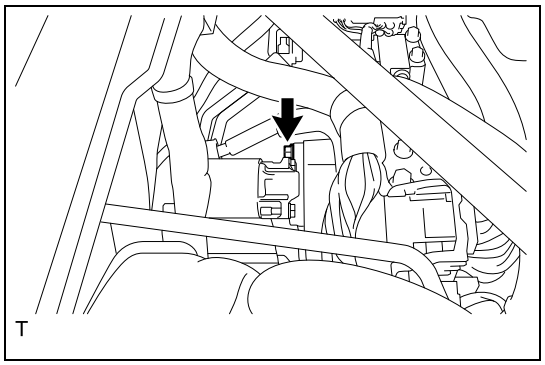

1. Installation of starter ASSY
   (1) Install the starter ASSY to the transmission and temporarily tighten the upper mounting bolt.

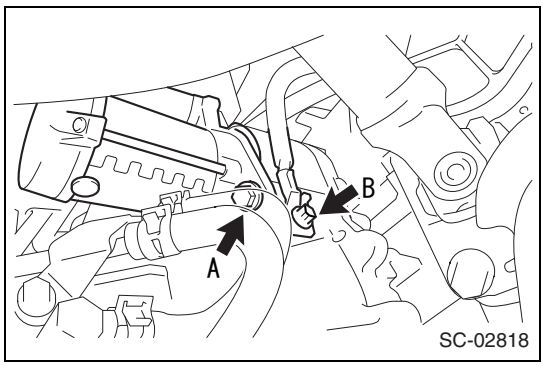

   (2) Lower mounting bolt tightening
      1. Tighten the lower mounting bolt A.
         Standard value: 50 N·m {510 kgf·cm} {36.9 ft·lbf}
      2. Tighten the ground cable fixing bolt B.
         CAUTION:
         When installing the ground cable, make sure to secure the stay.
         Standard value: 14 N·m {143 kgf·cm} {10.3 ft·lbf}

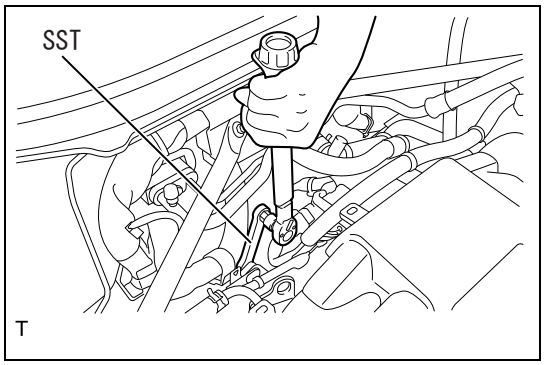

   (3) Tighten the upper mounting bolt of starter ASSY using the SST.
      SST 18283AA000
      Standard value:Specified tightening torque
      T=50N·m {510kgf·cm} {36.9ft·lbf}
      When using the SST, calculate the torque using the following formula.

Formula: T2 = L2/(L1 + L2) ×T1

T1	50 N·m
T2	Tightening torque
L1	Length of SST [0.085 m]
L2	Torque wrench length [m]

      NOTE:
      - This torque value is valid when the SST and torque wrench are aligned on a line.
      - Attach the SST and torque wrench so that they are aligned on a line.
   (4) Connect the connector and terminal to the starter ASSY.

2. CONNECT ENGINE WIRE
   (1) Connect the connector.

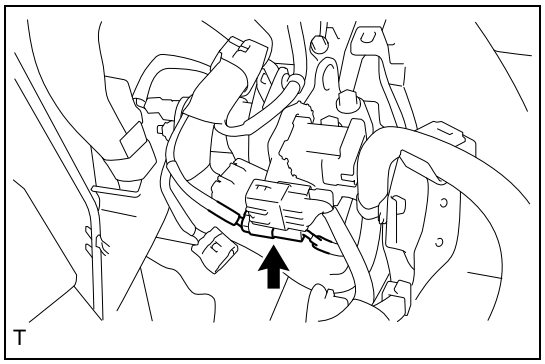

   (2) Install the wiring harness clamp (C) and clip (D).

ST

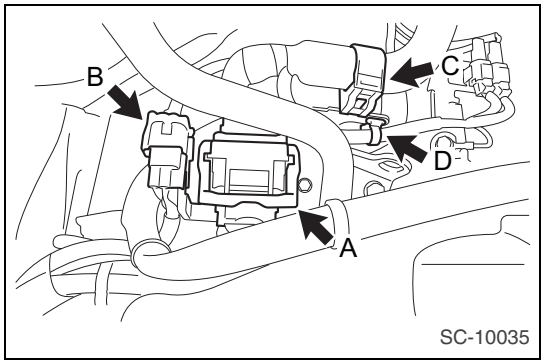

(3) Connect the connector (B).

(4) Connect the wire harness connector (A) and securely lock the connector.

3. Installation of exhaust pipe ASSY FR (Refer to IE - 46)
4. Connection of the battery ground terminal
   Standard value:T=6.0N·m {61kgf·cm} {4.4ft·lbf}

Engine switch

Exploded view

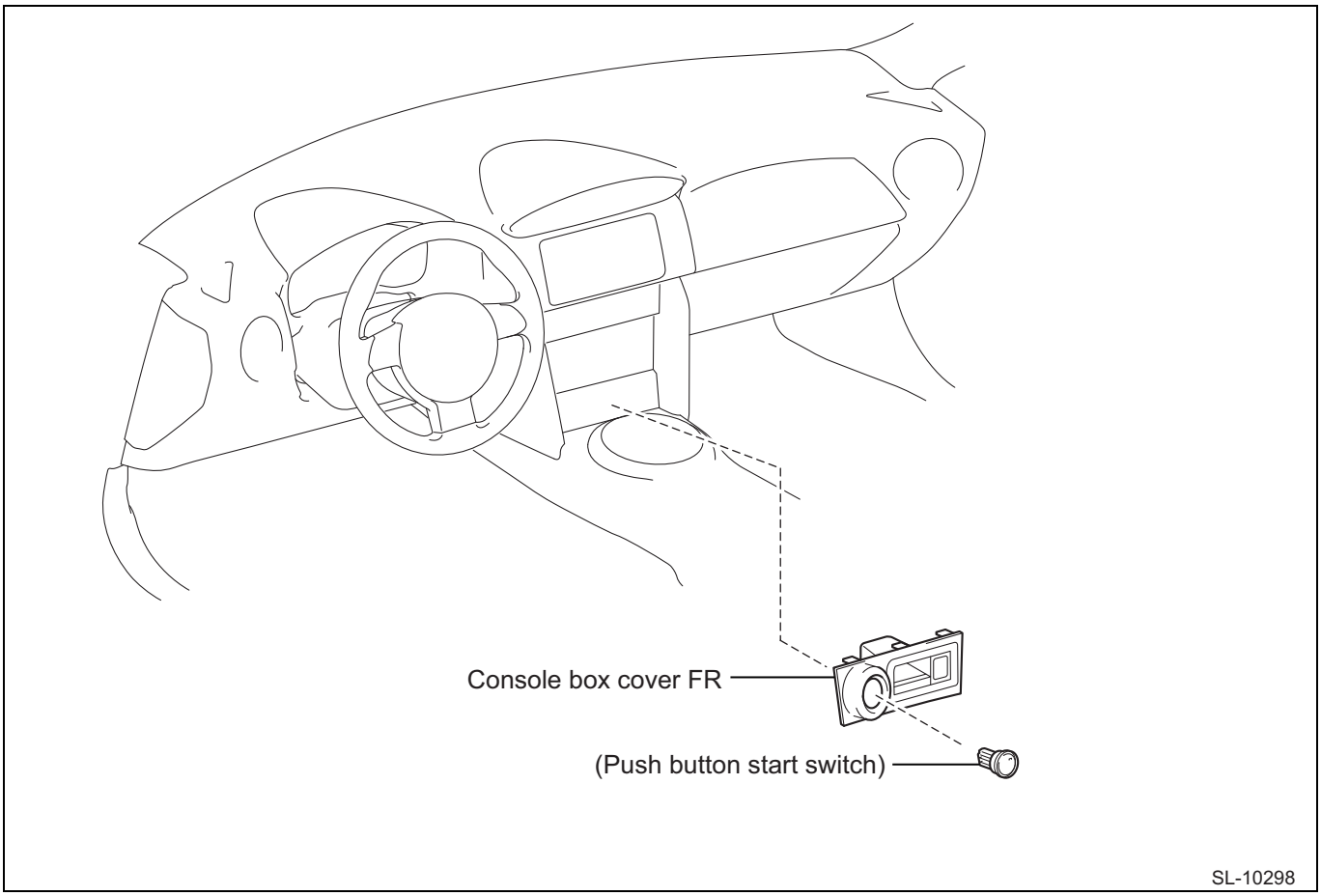

Removal

1. Disconnection of the battery ground terminal (Refer to IN - 6)
2. Removal of console box cover FR (Refer to IT - 33)

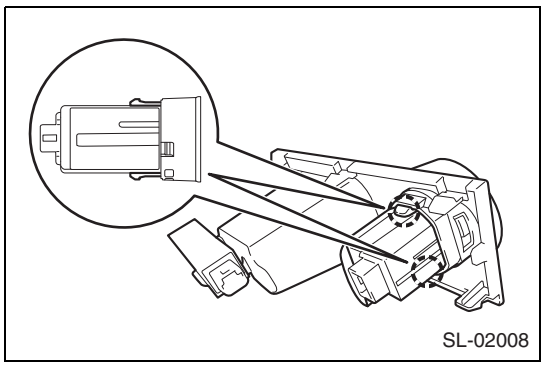

3. Push button start switch removal
   (1) Release the two claws from the back side of console box cover FR and remove the push button start switch.

Installation

1. Push button start switch installation
   (1) Install the push button start switch to the console box cover FR.
   NOTE:
   Make sure that the claws are engaged completely.
2. Installation of console cover FR (Refer to IT - 39)
3. Connection of battery ground terminal (refer to IN - 6)
4. Settings when removing/installing battery terminals (Refer to IN - 6)

Unit inspection

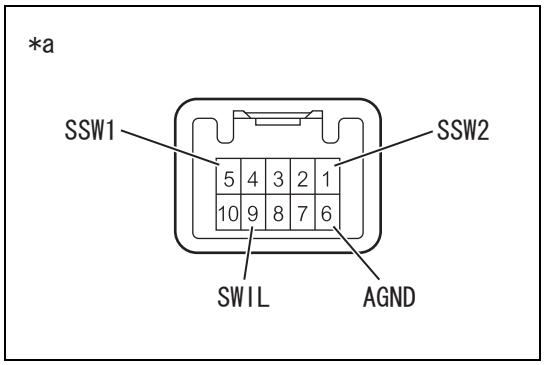

1. Push button start switch check
   (1) Resistance check
      (a)Measure the resistance between connector terminals.
      Resistance

Inspection terminals	Inspection conditions	Standard value
5 (SSW1) - 6 (AGND)	When the switch is not pressed	10 k Ωor more
1 (SSW2) - 6 (AGND)	When the switch is not pressed	10 k Ωor more
5 (SSW1) - 6 (AGND)	When the switch is pressed	Less than 1 Ω
1 (SSW2) - 6 (AGND)	When the switch is pressed	Less than 1 Ω

NOTE:
If the resistance is not within the standard value, replace the push button start switch.

   (2) LED illumination check
      (a)Connect the battery positive and negative to the connector terminals and check the LED illumination condition.

Criteria

Terminal No. (Battery positive - battery negative)	Criteria
9 (SWIL) - 6 (GND)	Character illumination lights up

NOTE:
If the resistance is not within the standard value, replace the push button start switch.

Captions in illustration

*a	Connector not connected (Push button start switch)

ST

Ignition (starter) switch ASSY

Exploded view

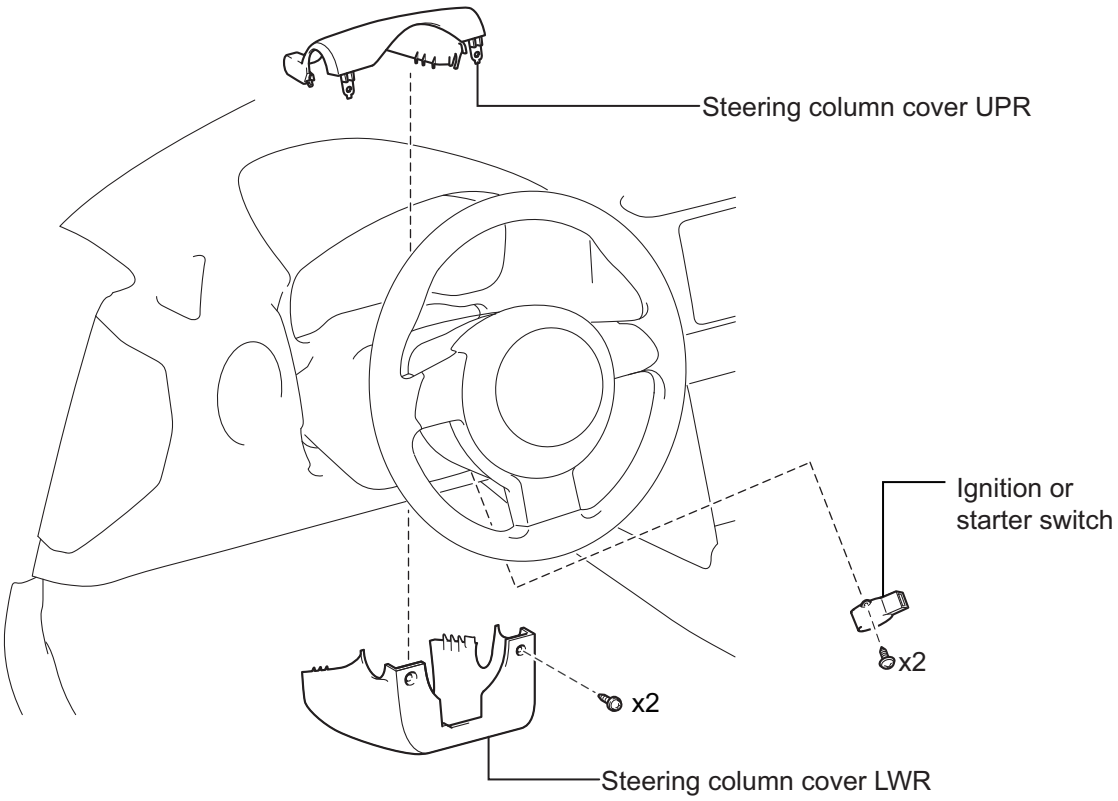

Removal

1. Removal of instrument panel under cover SUB-ASSY No. 1 (Refer to ME - 68)
2. Removal of the steering column cover LWR (Refer to WW - 22)
3. Removal of the steering column cover UPR (Refer to WW - 23)

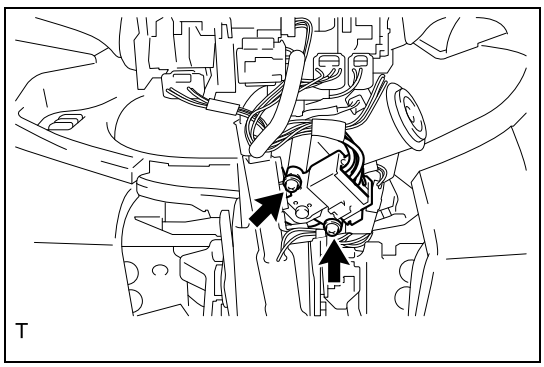

4. Ignition/starter switch ASSY removal
   (1) Disconnect the connector.
   (2) Remove the two screws and remove the ignition/starter switch ASSY.

Installation

1. Ignition/starter switch ASSY installation
   (1) Install the ignition/starter switch ASSY with the two screws.
   (2) Connect the connector.
2. Installation of the steering column cover UPR (Refer to SR - 63)
3. Installation of the steering column cover LWR (Refer to SR - 63)
4. Installation of instrument panel under cover SUB-ASSY NO. 1 (Refer to ME - 69)
5. Settings when removing/installing battery terminals (Refer to IN - 6)

Unit inspection

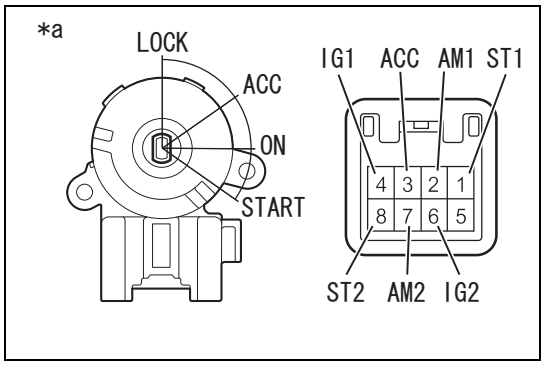

1. Ignition/starter switch ASSY check
   (1) Measure the resistance between connector terminals.
   Resistance

Inspection terminals	Inspection conditions	Standard value
-	LOCK	10 k Ωor more
2 (AM1) - 3 (ACC)	ACC	Less than 1 Ω
2 (AM1) - 3 (ACC) - 4 (IG1)	ON	Less than 1 Ω
6 (IG2) - 7 (AM2)		
1 (ST1) - 2 (AM1) - 4 (IG1)	START	Less than 1 Ω
6 (IG2) - 7 (AM2) - 8 (ST2)		

Captions in illustration

*a	Connector not connected (Ignition/starter switch ASSY)

ST

Key lock unit

Exploded view

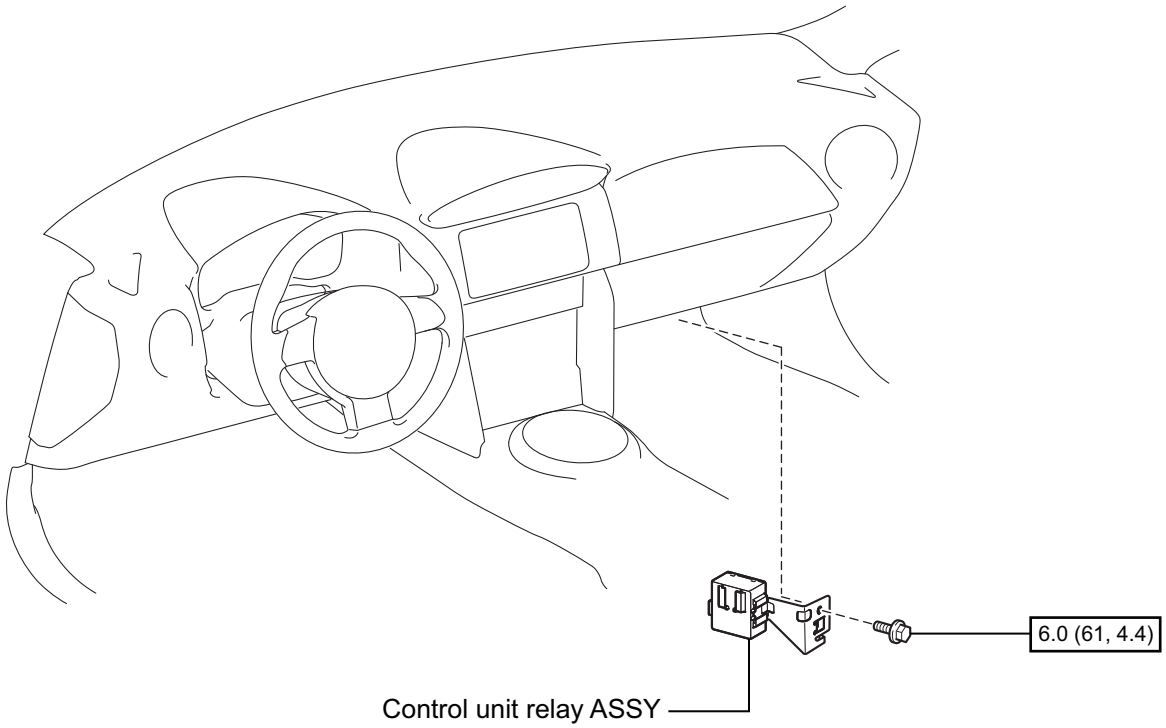

N*m (kgf*cm, ft*lbf) : Tightening torque

SL-10300

ST

Removal

1. Disconnection of the battery ground terminal (Refer to IN - 6)
2. Instrument side panel RH removal (Refer to IT - 24)
3. Removal of glove compartment door ASSY (Refer to IT - 25)

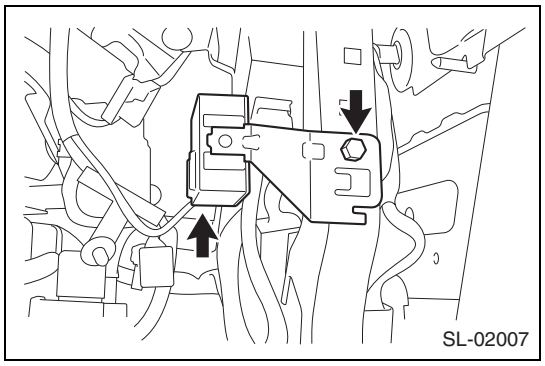

SL-02007

4. Control unit relay ASSY removal
   (1) Disconnect the connector of control unit relay ASSY.
   (2) Remove the bolt and remove the control unit relay ASSY.

Installation

1. Control unit relay ASSY installation
   (1) Install the control unit relay ASSY with the bolt.
   Standard value:T=6.0N·m {61kgf·cm} {4.4ft·lbf}
   (2) Connect the connector of control unit relay ASSY.
2. Installation of glove compartment door ASSY (Refer to IT - 29)
3. Installation of the instrument side panel RH (Refer to IT - 29)

4. Connection of battery ground terminal (refer to BH - 35)

Relay

Unit inspection

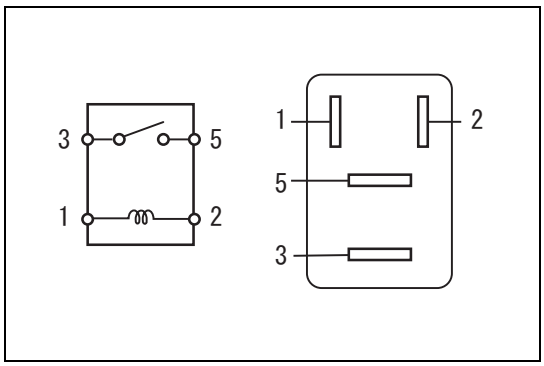

1. ST relay check
   (1) Check the resistance between relay connector terminals.
   Resistance

Inspection terminals	Inspection conditions	Standard value
1 - 2	20°C	93.8 to 136.4Ω
3 - 5	When the battery voltage is not applied to the terminal 1 and terminal 2:	10 k Ωor more
	When the battery voltage is applied to the terminal 1 and terminal 2:	Less than 1 Ω

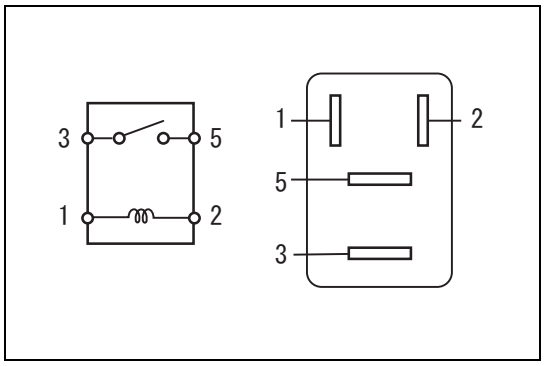

2. INHIBITOR relay check
   (1) Check the resistance between relay connector terminals.
   Resistance

Inspection terminals	Inspection conditions	Standard value
1 - 2	20°C	93.8 to 136.4Ω
3 - 5	When the battery voltage is not applied to the terminal 1 and terminal 2:	10 k Ωor more
	When the battery voltage is applied to the terminal 1 and terminal 2:	Less than 1 Ω

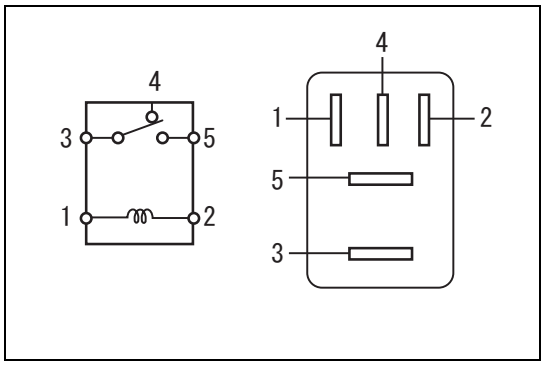

3. ST CUT relay check (with smart key system)
   (1) Check the resistance between relay connector terminals.
   Resistance

Inspection terminals	Inspection conditions	Standard value
1 - 2	20°C	93.8 to 136.4Ω
3 - 4	When the battery voltage is not applied to the terminal 1 and terminal 2:	Less than 1 Ω
	When the battery voltage is applied to the terminal 1 and terminal 2:	10 k Ωor more
3 - 5	When the battery voltage is not applied to the terminal 1 and terminal 2:	10 k Ωor more
	When the battery voltage is applied to the terminal 1 and terminal 2:	Less than 1 Ω

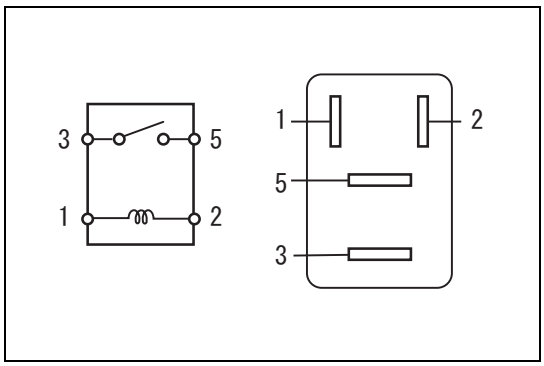

4. IGS relay check (with smart key system)
   (1) Check the resistance between relay connector terminals.
   Resistance

Inspection terminals	Inspection conditions	Standard value
1 - 2	20°C	93.8 to 136.4Ω
3 - 5	When the battery voltage is not applied to the terminal 1 and terminal 2:	10 k Ωor more
	When the battery voltage is applied to the terminal 1 and terminal 2:	Less than 1 Ω

ST

Cruise control

Cruise control system

Precautions CC-2
Parts location CC-3
System diagram CC-5
Description of functions CC-6
How to troubleshoot CC-7
Diagnostics with phenomenon CC-11
ECM terminal arrangement CC-13
Subaru select monitor CC-13
Cancel code reading CC-14
List of cancel codes CC-14
Data list diagnostics CC-15
Cancel code 11 . . . . . CC-16
Cancel code 12 . . . . . CC-19
Cancel code 13 . . . . . CC-20
Cancel code 14 . . . . . CC-22
Cancel code 15 . . . . . CC-23
Cancel code 16 . . . . . CC-23
Cancel code 22 . . . . . CC-24
Cancel code 24 . . . . . CC-25
Cancel code 31 . . . . . CC-25
Cancel code 32 . . . . . CC-25
Cancel code 34 . . . . . CC-26
Cancel code 35 . . . . . CC-26
Cancel code 41 . . . . . CC-26
Cancel code 43 . . . . . CC-26
Cancel code 45 . . . . . CC-26
Cancel code 49 . . . . . CC-26
Cancel code 61 . . . . . CC-27
Cancel code 62 . . . . . CC-27
Cancel code 63 . . . . . CC-27
Cancel code 64 . . . . . CC-27
Cancel code 65 . . . . . CC-27

Cruise control main switch

Components CC-28
Removal CC-28
Installation CC-29
Inspection CC-29

Cruise Control System

Precautions

1. Precautions concerning cruise control system
   (1) When using the cruise control system, turn the cruise control system main switch (ON-OFF button) to ON after engine has started.
   (2) When not in use of cruise control system, turn the cruise control system main switch (ON-OFF button) to OFF.
   (3) Pay attention to vehicle speed while driving in declining lanes even if the cruise control system is active to control the vehicle speed.
   (4) When the cruise control indicator turns off or turns yellow against driver's intention, a malfunction of the cruise control function may be occurring.
   (5) Do not use the cruise control system under the following road conditions.
      • Roads where the certain vehicle distance is difficult to be maintained due to heavy traffic
      • Steep downhill lanes
      • Curving lanes with a sharp bend
      • Frozen or snowy roads
      • Slippery roads
   (6) Do not use the cruise control system while towing.

Parts location

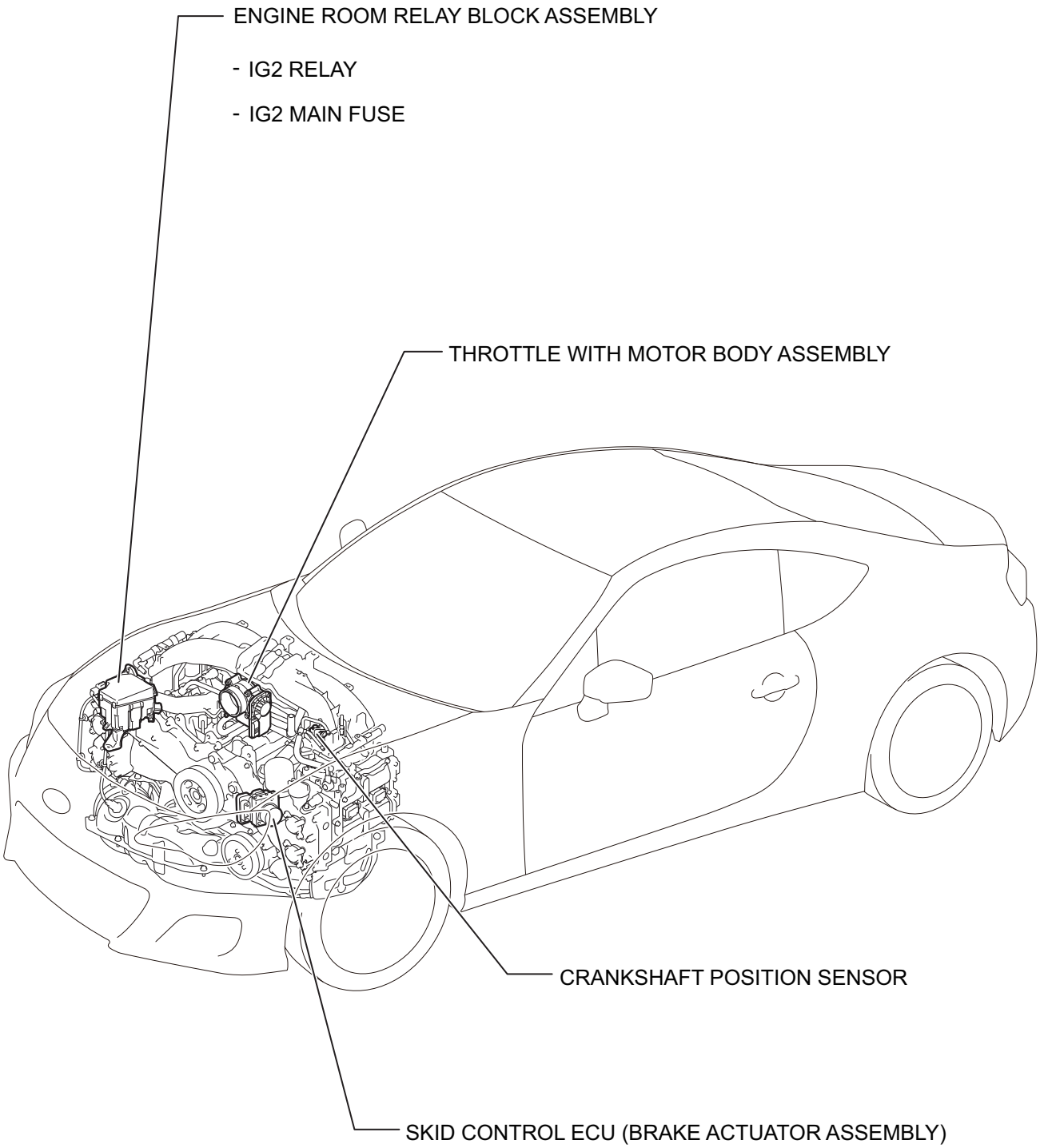

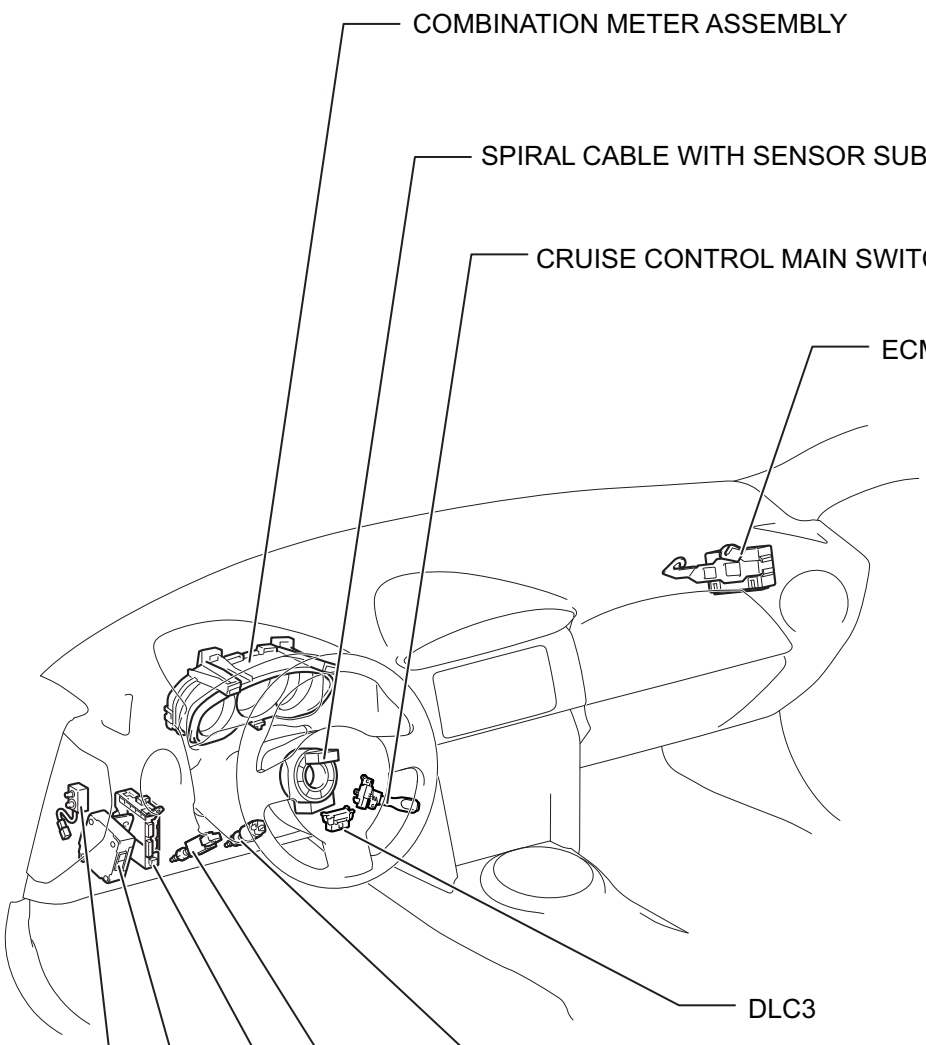

*1: for Manual Transmission

*2: for Automatic Transmission

CC-01007

CC

System diagram

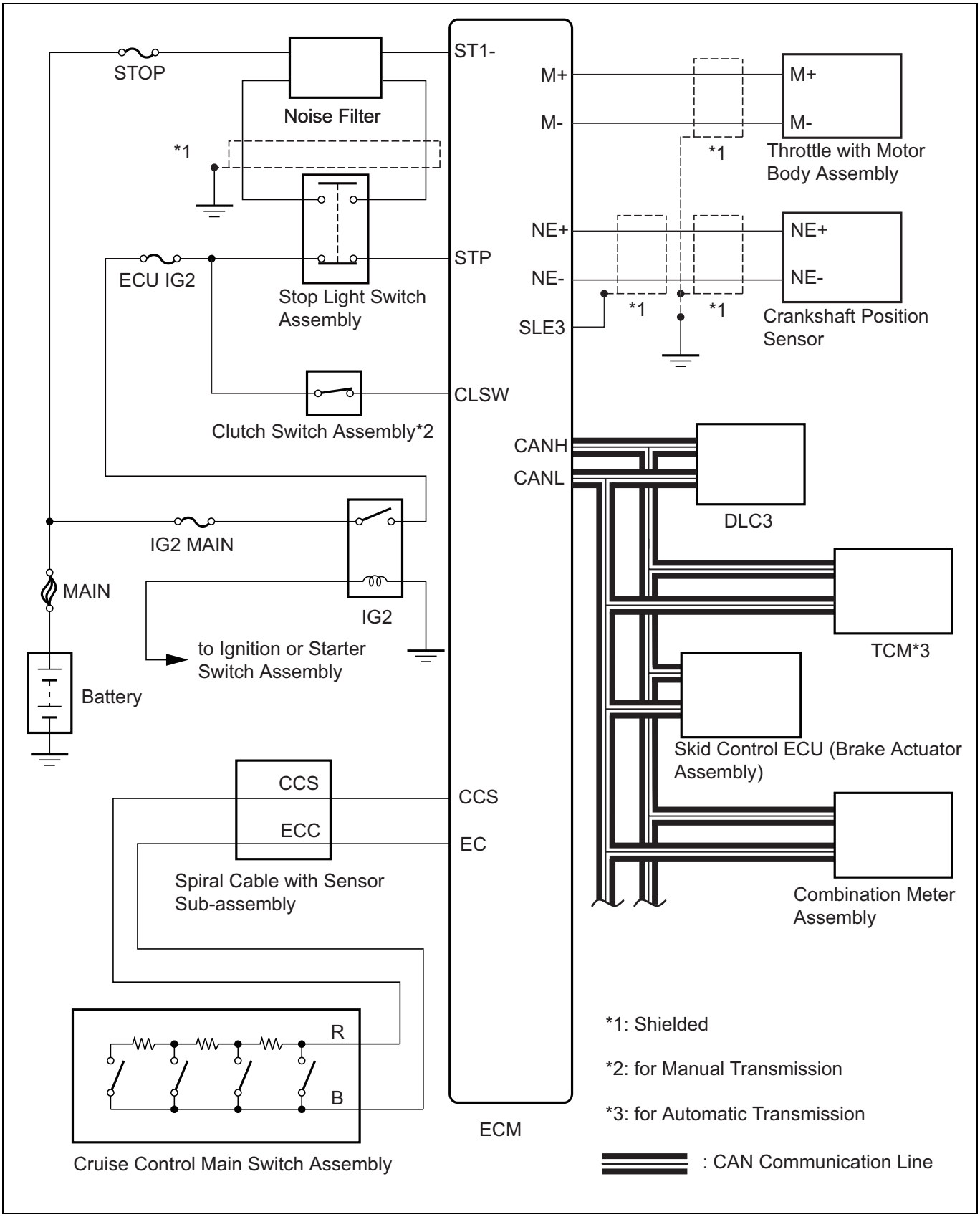

Communication chart

Transmitter side	receiver side	Remarks	Lines
TCM	ECM	Shift lever position and gear selection signal	CAN
Skid control ECM	ECM	• Vehicle speed signal • ABS, TRC or VSC operation signal	CAN

Transmitter side	receiver side	Remarks	Lines
ECM	Combination meter ASSY (Cruise control indicator) (Cruise control SET indicator)	Cruise control indicator and cruise control SET indicator operation signal	CAN

Description of functions

1. Cruise Control System
   (1) This function is controlled by ECM, and operated by throttle body. ECM controls the following functions.
   : ON-OFF, -(COAST)/SET, +(ACCEL)/RES (RESUME), CANCEL, vehicle speed operation
   (a)ECM compares the vehicle speed detected by speed sensor and the vehicle speed memorized through the cruise control main switch. When the vehicle speed exceeds the stored vehicle speed, ECM commands the throttle motor of the throttle body to close the valve, on the other hand, when the vehicle speed is lower than the stored vehicle speed, ECM commands to open the valve.
   (b)ECM receives signals such as ON-OFF, -SET, +RES, CANCEL through the cruise control main switch to execute these commands.
   (c)When the system turns to ON through the cruise control main switch (ON-OFF button), the cruise control indicator in the combination meter ASSY turns green through ECM.
   (d)When trouble occurs while driving with the cruise control function ON, the cruise control indicator in the combination meter ASSY turns off or turns yellow through ECM.
   (e)When the cruise control main switch turns to -SET while driving, the cruise control SET indicator in the combination meter ASSY turns green through ECM to start the vehicle speed control.

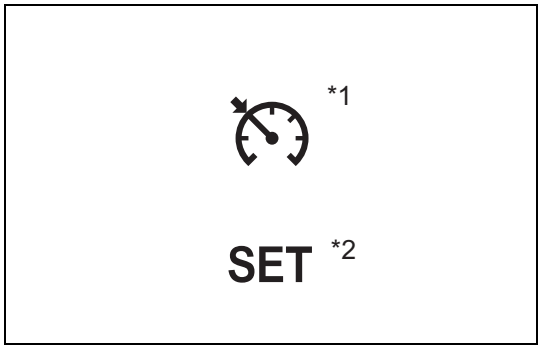

Captions in illustration

*1	Cruise control indicator (illuminate green or yellow)	*2	Cruise control SET indicator

2. Vehicle speed control
   (1) Minimum speed
   Possible minimum speed setting is approx. 40 km/h {25 MPH}. When vehicle speed is lower than the minimum speed, the cruise control system cannot be set. When the vehicle speed drops below the controllable speed (approx. 30km/h {20 MPH}) while the cruise control controls the vehicle speed, the speed control deactivates automatically, however the stored vehicle speed will be maintained.
   (2) Maximum speed
   Possible maximum speed setting is approx. 144km/h {90 MPH}. When vehicle speed exceeds the maximum speed, the cruise control system cannot be set. Also, +(ACCEL)/RES (RESUME) is not available to set the maximum speed higher.
3. Operation of the cruise control
   (1) In addition to switching the cruise control system to ON/OFF, the cruise control main switch can operate the following seven functions.
   : SET, -(COAST), TAP-DOWN, RES(RESUME), +(ACCEL), TAP-UP, CANCEL
   (2) SET, -(COAST), TAP-DOWN activate with the switch down, while RES(RESUME), +(ACCEL), TAP-UP activate with the switch up.
   (3) As the cruise control main switch is an auto return type switch, it is ON while operated in each arrowed direction, and OFF while not operated.
   (a)SET control
   When the cruise control main switch is in -SET while driving with the cruise control system in use (the cruise control indicator illuminates green), the vehicle speed is stored and the speed control starts.
   (b)-(COAST) control

When the cruise control main switch is kept pressing to -SET while the cruise control system is controlling the vehicle speed, the cruise control system sends the signal to ECM to operate the throttle valve motor of the throttle with the motor body ASSY, and then the throttle valve is closed. After this, when the cruise control main switch is released, the vehicle speed is stored and maintained.

(c) TAP-DOWN control

When the cruise control main switch is pressed to -SET (for approx. 0.3 seconds) while the cruise control system is controlling the vehicle speed, the stored vehicle speed is decreased by 1 MPH {1.6 km/h}*1 or 1.0 km/h {0.6 MPH}*2 every time the switch is pressed. When the current and stored vehicle speed differs by 4 MPH {6.8 km/h}*1 or 4.4 km/h {3 MPH}*2 or more with the cruise control main switch pressed to -SET side, the current vehicle speed is stored and the speed control is executed.

*1: United States

*2: Canada

(d) Acceleration control

When the cruise control main switch is kept pressing to +RES while the cruise control system is controlling the vehicle speed, the cruise control system sends the signal to ECM to operate the throttle valve motor of the throttle with the motor body ASSY, and then the throttle valve is opened. After this, when the cruise control main switch is released, the vehicle speed is stored and maintained.

(e) TAP-UP control

When the cruise control main switch is pressed to +RES (for approx. 0.3 seconds) while the cruise control system is controlling the vehicle speed, the stored vehicle speed is increased by 1 MPH {1.6 km/h}*1 or 1.0 km/h {0.6 MPH}*2 every time the switch is pressed. When the current and stored vehicle speed differs by 4 MPH {6.8 km/h}*1 or 4.4 km/h {3 MPH}*2 or more with the cruise control main switch pressed to +/RES side, the stored vehicle speed does not change.

*1: United States

*2: Canada

(f) RESUME control

When the vehicle speed is approx. 30 km/h {20 MPH} or more after deactivating the cruise control intentionally (except by turning the cruise control ON-OFF switch to OFF), the vehicle speed stored at deactivating is resumed by pressing the cruise control main switch to +RES side.

(g) Shift down control (only AT)

When the vehicle drives downslope, the transmission shifts down when the actual vehicle speed exceeds the TCM control threshold by the specified value. When the TCM judges that the vehicle can drive according to the stored value, the transmission will shift up.

(h) Intentional cancel operation.

By performing the following operation, the vehicle speed control by the cruise control is cancelled. (The stored vehicle speed is maintained in ECM.)

- Brake pedal is depressed.
- Depress the clutch pedal. (for manual transmission)
- Shift the shift lever to 1st or R position. (for manual transmission)
- Shift the shift lever from D or M position to the other position. (for automatic transmission)
- Select the 1st with the shift lever in M position. (for automatic transmission)
- Use the shift paddle switch to select the 1st with the shift lever in M (using the shift paddle switch) . (for automatic transmission)
- Pull the cruise control main switch to CANCEL side.
- Turn the cruise control function to OFF using the cruise control main switch (ON-OFF button) (the stored vehicle speed in ECM will not be maintained).

4. Auto cancel

ECM cancels the cruise control under certain conditions. The cause of cancellation can be confirmed by referring “CANCEL CODE”.

How to troubleshoot

NOTE:

- Follow the methods below to troubleshoot the cruise control functions.
- *: Use the SSM4.

CAUTION:
- Before performing all diagnostics or cruise control diagnostics, start the engine to check the initial illumination of ABS/VDC warning light turns off. (If you start the diagnostics before performing the procedures above, the cancel code “43” is recorded and CRUISE indicator does not illuminate even though the CRUISE switch is pressed.)
- When performing diagnosis, observe the legal speed limit on the road.
- The cancel code will also appear when the cruise control is cancelled by the driver's operation. Do not confuse them.
- Be sure to get an assistant to support the diagnosis while driving, and have him/her operate the select monitor.

1	Bring in the car

Next

2	Battery voltage check

(1) Turn IG SW to OFF to check the battery.
Standard voltage: 11 to 14 V
NOTE:
When the voltage is below 11 V, replace or charge the battery before the next step.

Next

3	Check CAN communication system.

(1) Check CAN communication system. (Refer to NW - 30)
Criteria: No fault is found.

NO > Repair according to the check of CAN communication system.

YES

4	Check malfunction indicator light.

(1) Make sure the malfunction indicator light illuminates.
Criteria: No illumination

NO > Go to Step 8.

YES

5	Check CRUISE indicator light.

(1) Check the illumination of the CRUISE indicator.
Criteria: No yellow illumination

NO > Go to Step 10.

YES

6	Check CRUISE switch operation.

(1) Check the CRUISE switch operation. (Check the illumination of the CRUISE indicator.)

Criteria: CRUISE switch turns on (CRUISE indicator illuminates)

NO → Perform Diagnostics with Phenomenon 1 (Refer to CC - 11)

YES

7	Check cruise control set operation.

(1) Check the cruise control setting operation.
Criteria: The cruise control can be set while driving at 40 km/h {25 MPH} or more.

NO → Go to Step 10.

YES

Go to Step 11.

8	Check DTC

(1) Read all DTCs using SSM4.
Criteria: The engine or ABS/VDC related DTC displays.

NO → Perform Diagnostics with Phenomenon 2 (Refer to CC - 11)

YES

9	Check freeze frame data.

(1) Record the DTC displayed.
(2) Using the Subaru Select Monitor, check the Freeze Frame Data or Information in Trouble State.
Criteria: The Freeze Frame Data or Information in Trouble State is recorded.

NO → Perform the diagnosis according to the engine or ABS/VDC related DTC.

YES

Record the data. Perform the diagnosis according to the engine or ABS/VDC related DTC.

10	Check cancel code.

(1) Using SSM4, read the cancel codes.
NOTE:
- Do not turn the ignition switch to OFF after the cruise control is deactivated.
- Do not operate the cruise control command switch after the cruise control is deactivated.

If the above is performed, the cancel code will be cleared.

Criteria: Cancel codes are not recorded.

NO → Perform diagnosis according to the cancel codes.

YES

11	Check set indicator.

(1) Check the illumination of the SET indicator.
Criteria: SET indicator illuminates.

NO → Perform Diagnostics with Phenomenon 3 (Refer to CC - 11)

YES

12	Check vehicle speed is held within set speed.

(1) Vehicle speed is held within set speed ±3 km/h {±2 MPH}.
NOTE:
Check on level ground.
Criteria: Speed is held.

NO → Perform Diagnostics with Phenomenon 4 (Refer to CC - 11)

YES

13	+RES operation check

(1) Check +RES switch operation.
Criteria: The vehicle speed increases or returns to set speed after +RES switch has been pressed.

NO → Perform Diagnostics with Phenomenon 5 (Refer to CC - 11)

YES

14	-SET operation check

(1) Check -SET switch operation.
Criteria: The vehicle speed decreases after -SET switch has been pressed.

NO → Perform Diagnostics with Phenomenon 6 (Refer to CC - 11)

YES

15	Cancel operation check

(1) Check the CANCEL switch operation.
Criteria: Cruise control is released after CANCEL switch has been pressed.

NO → Perform Diagnostics with Phenomenon 7 (Refer to CC - 11)

YES

16	Check cruise control release operation.

(1) Check the cruise control release operation.
Criteria: Cruise control is released after brake pedal has been depressed.

NO → Perform Diagnostics with Phenomenon 8 (Refer to CC - 11)

YES

17	Check cruise control release operation.

(1) Check the cruise control release operation.
Criteria: Cruise control is released after shifting to the neutral position.

NO → Perform Diagnostics with Phenomenon 9 (Refer to CC - 11)

YES

18	Check cruise control release operation.

(1) Check the cruise control release operation.
Criteria: Cruise control is released after clutch pedal has been depressed.

NO → Perform Diagnostics with Phenomenon 10 (Refer to CC - 11)

YES

Complete

Diagnostics with Phenomenon

1. Diagnostic procedures according to symptoms

Phenomenon		Check Item	Note
1	ON-OFF switch is not turned ON. (CRUISE indicator does not illuminate.) Or the cruise control is cancelled without CRUISE switch operation.	(1) Perform cruise cancel conditions diagnosis.	Perform the diagnosis according to displayed cancel code.
		(2) Perform the data list diagnosis.	Check the input signal of cruise control system.
		(3) Check the cruise control command switch.	Perform the diagnosis according to the Cancel Code 11. (Refer to CC - 16)
		(4) Check the CRUISE indicator.	Perform the diagnosis according to the check of CRUISE indicator & SET indicator.

Phenomenon		Check Item	Note
2	Cruise control cannot be set. Or cruise control is cancelled without releasing operation.	(1) Perform cruise cancel conditions diagnosis.	Perform the diagnosis according to displayed cancel code.
		(2) Perform the data list diagnosis.	Check the input signal of cruise control system.
		(3) Check the cruise control command switch.	Perform the diagnosis according to the Cancel Code 11. (Refer to CC - 16)
		(4) Check stop light switch and brake switch.	Perform the diagnosis according to the Cancel Code 12. (Refer to CC - 19)
		(5) Check the neutral position switch.	Perform the diagnosis according to the Cancel Code 14 or 62.
		(6) Check vehicle speed sensor.	Perform the diagnosis according to the Cancel Code 22. (Refer to CC - 24)
3	SET indicator does not illuminate.	Check the SET indicator.	Perform the diagnosis according to the check of CRUISE indicator & SET indicator.
4	Vehicle speed is not held within set speed ±3 km/h (±2 MPH).	Check the vehicle speed sensor.	Perform the diagnosis according to the Cancel Code 22. (Refer to CC - 24)
5	Vehicle speed does not increase or does not return to set speed after +RES switch has been pressed.	(1) Perform the data list diagnosis.	Check the input signal of cruise control system.
		(2) Check the +RES switch.	Perform the diagnosis according to the Cancel Code 11. (Refer to CC - 16)
6	Vehicle speed does not decrease after -SET switch has been pressed.	(1) Perform the data list diagnosis.	Check the input signal of cruise control system.
		(2) Check the -SET switch.	Perform the diagnosis according to the Cancel Code 11. (Refer to CC - 16)
7	Cruise control is not released after CANCEL switch has been pressed.	(1) Perform the data list diagnosis.	Check the input signal of cruise control system.
		(2) Check the CANCEL switch.	Perform the diagnosis according to the Cancel Code 11. (Refer to CC - 16)
8	Cruise control is not released after brake pedal has been depressed.	(1) Perform the data list diagnosis.	Check the input signal of cruise control system.
		(2) Check stop light switch and brake switch.	Perform the diagnosis according to the Cancel Code 12. (Refer to CC - 19)
9	Cruise control is not released after shifting to the neutral position.	(1) Perform the data list diagnosis.	Check the input signal of cruise control system.
		(2) Check the neutral position switch.	Perform the diagnosis according to the Cancel Code 14. (Refer to CC - 22)
10	Cruise control is not released after clutch pedal has been depressed.	(1) Perform the data list diagnosis.	Check the input signal of cruise control system.
		(2) Check the clutch switch.	Perform the diagnosis according to the Cancel Code 13. (Refer to CC - 20)

CC

2. Inspection of CRUISE indicator & SET indicator

TROUBLE SYMPTOM:

Cruise control can be set, but the CRUISE indicator & SET indicator do not illuminate.

1	Check CRUISE indicator & SET indicator.

(1) Check the combination meter.

Criteria: CRUISE indicator & SET indicator illuminate.

NO → Replace the combination meter.

YES

2	Check CAN communication system.

(1) Check CAN communication system. (Refer to NW - 30)

Criteria: No fault is found.

NO → Repair according to the check of CAN communication system.

YES

Replace the ECM.

ECM terminal arrangement

1. Check ECM.

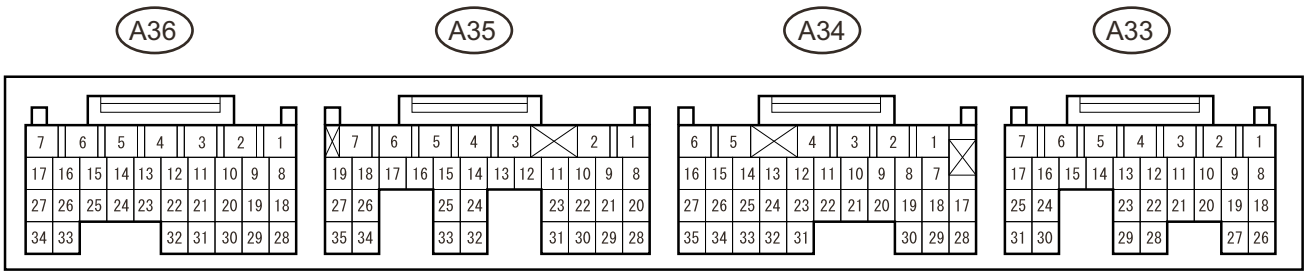

Terminal No. (. symbol)	Wiring color	Terminal description	Condition	Standard value
A33-3 (BRK2) - A33-4 (GNDBY)	BRB - BL	Stop light signal	IG ON, brake pedal depressed	11 to 14 V
			IG ON, brake pedal released	Less than 1 V
A33-7 (BRK1) - A33-4 (GNDBY)	R - BL	Brake signal	IG ON, brake pedal depressed	Less than 1 V
			IG ON, brake pedal released	11 to 14 V
A33-15 (CLT)* - A33-4 (GNDBY)	RY - BL	Clutch switch circuit	IG ON, clutch pedal depressed	Less than 1 V
			IG ON, clutch pedal released	11 to 14 V
A33-30 (CCMD) - A33-4(GNDBY)	WL - BL	Cruise control main switch circuit	All switch OFF released	1 MΩ or more
			Cruise ON/OFF switch ON	Less than 1 Ω
			+/RES switch ON	235 to 245 Ω
			-/SET Switch ON	617 to 643 Ω
			CANCEL switch ON	1509 to 1571 Ω

*: For manual transmission

SUBARU SELECT MONITOR

1. OPERATION

The on-board diagnosis function of the cruise control system uses Subaru Select Monitor. The on-board diagnosis function operates in two categories, which are used depending on the type of problems.

(1) Cruise Control Cancel Conditions Diagnosis:

- This category of diagnosis requires actual vehicle driving in order to determine the cause, as when cruise speed is cancelled during driving although cruise cancel condition is not entered.
- Cruise control memory in ECM stores the cancel code which occurred during driving. When there are multiple cancel code, they are shown on the Subaru Select Monitor.

CAUTION:

- In the cruise control memory, not only the cruise control "cancel" occurred (although the "cancel" operation is not entered by the driver), but also the "cancel" condition input by the driver is stored.
- The latest memory content (latest code) is cleared when ignition switch is turned to OFF. However, memory contents set by the diagnosis of faulty switches related to the system and cruise control will remain as trouble history (memory code) after the ignition switch is turned to OFF.

(2) Data list diagnostics:

Data list diagnosis function is used to determine whether or not the input signal system is in good order, according to signal emitted from switches, sensors, etc.
- Vehicle cannot be driven at cruise speed when the problem occurs in the cruise control system or relevant circuits.
- Monitor the signal conditions from switches and sensors.

2. BASIC OPERATION
For the operation procedure, refer to "PC application help".

Cancel code reading

1. OPERATION
(1) Connect the SSM4 to the DLC3.
(2) Start the engine.
(3) Turn on the SSM4.
(4) Select from the following menu items: [Each System] / [Engine Control System] / [Cancel Code]
(5) Drive vehicle at 40 km/h {25 MPH} or more and set the cruise control.
CAUTION:
- When performing diagnosis, observe the legal speed limit on the road.
- The cancel code will also appear when the cruise control is cancelled by the driver's operation. Do not confuse them.
- Be sure to get an assistant to support the diagnosis while driving, and have him/her operate the select monitor.

(6) When the set speed is cancelled by itself (when cancelled without a cancel operation such as applying the brake) or if the cruise control could not be set by performing the setting operation, selecting the [Cancel Code] on the engine malfunction diagnosis screen will display the cancel code on the select monitor display.
NOTE:
The [Current] and [Past] are contained in the cancel code. The latest code recognized during current test drive is displayed in [Current]. Cancel codes resulting from fault diagnosis of switches relating to the system and cruise control are also displayed in [Past].
(7) Perform Engine DTC Clear Memory operation. Cancel codes for switches relating to the system and cruise control are deleted by clearing memory on the engine side.
NOTE:
- The latest code will be cleared by turning ignition switch to OFF.
- For detailed operation procedures, refer to "PC application help".
- For details on cancel codes, refer to List of Cancel Codes.

CC

List of Cancel Codes

NOTE:
- The cancel code is registered even when cancel is performed intentionally by the driver.
- Cancel codes are cleared if the ignition switch is turned to OFF.
- If a different cancel code is input after a cancel code (latest code) has been input, the latest code is overwritten.
- If the cruise indicator light turns yellow, a malfunction is occurring in the system or cruise control related switch. The cancel code at this time is saved even after ignition switch is OFF as a memory code of a past malfunction.
- To display a cancel code, use the Subaru Select Monitor to read the code after the cruise control is deactivated during a driving test.

Cancel code	Item	Content of diagnosis	Note
11	[Main switch]	ON-OFF switch of cruise control main switch is turned to OFF, and then the cruise control is released.	This code is displayed without operating the ON-OFF switch. Refer to Cancel Code 11. (Refer to CC - 16)
12	[Stop & Brake switch]	Stop light switch or brake switch is turned to ON, and then the cruise control is released.	This code is displayed without depressing the brake pedal. Refer to Cancel Code 12. (Refer to CC - 19)
13	[Clutch switch]	Clutch switch is turned to ON, and then the cruise control is released.	This code is displayed without depressing the clutch pedal. Refer to Cancel Code 13. (Refer to CC - 20)
14	[Neutral switch]	Neutral position switch is turned to ON, and then the cruise control is released.	This code is displayed without shifting to neutral position. Refer to Cancel Code 14. (Refer to CC - 22)

Cancel code	Item	Content of diagnosis	Note
15	[Cancel switch]	Cancel switch is turned to ON, and then the cruise control is released.	This code is displayed without operating the cancel switch. Refer to Cancel Code 15. (Refer to CC - 23)
16	[Ignition Switch]	Ignition switch is turned to OFF, and then the cruise control is released.	This code is displayed without operating the ignition switch. Refer to Cancel Code 16. (Refer to CC - 23)
22	[Abnormality of change in vehicle speed]	Malfunction of vehicle speed signal variation is detected.	Refer to Cancel Code 22. (Refer to CC - 24)
24	[Abnormality of switches related to cruise control]	Open circuit of cruise control switch is detected during cruise driving. (The system is judged as model without cruise control.)	This code is displayed with normal operation. Refer to Cancel Code 24. (Refer to CC - 25)
31	[Abnormal engine speed Signal]	• Abnormal increase of engine speed is detected. • Gear is placed in Neutral, 1st or Reverse position.	Cruise in 2nd shift position or more. Refer to Cancel Code 31. (Refer to CC - 25)
32	[Cruse Control out of Range]	• Controlled vehicle speed decreased under the limit during cruising. • Set operation was performed at vehicle speed unavailable for setting. • RESUME operation was performed without memorized vehicle speed.	This code is displayed, though the vehicle speed is increased to the speed available for cruise set and set operation was performed again. Refer to Cancel Code 32. (Refer to CC - 25)
34	[Prohibition of cruise control at continuing big Accel. angle]	The vehicle has been driven at higher speed than set vehicle speed for an abnormally long time (approximately 10 minutes) during cruise driving.	This code is displayed when driving for a long period of time at higher speed than appropriate cruise set vehicle speed by operating accelerator pedal. In this case, the cruise setting is deactivated. Refer to Cancel Code 34. (Refer to CC - 26)
35	[Prohibition of cruise control at vehicle speed F/B malfunction]	Set vehicle speed cannot be kept because of some reasons (steep uphill, parking brake, abnormal decrease of engine output, etc.) during cruise driving.	This code is displayed when driving condition is not suitable for cruise control. Perform cruise set operation again after clearing the possible cause. Refer to Cancel Code 35. (Refer to CC - 26)
41	[VDC/TCS Operating]	Vehicle dynamics control (VDC) or TCS is activated during cruise driving or cruise setting.	This code is displayed when driving condition is not suitable for cruise control. Perform cruise set operation again after clearing the possible cause. Refer to Cancel Code 41. (Refer to CC - 26)
43	[ABS/VDC Failure]	• During cruise driving or cruise setting, the situation that some or all functions for ABS or VDC can not work is detected. • CRUISE indicator does not illuminate even though you pressed the CRUISE switch before starting the engine.	Refer to Cancel Code 43. (Refer to CC - 26)
45	[Meter Failure]	Combination meter malfunction is detected during cruise driving or cruise setting.	Refer to Cancel Code 45. (Refer to CC - 26)
49	[TCM Failure]	Transmission control module (TCM) malfunction is detected during cruise driving or cruise setting.	Refer to Cancel Code 49. (Refer to CC - 26)
61	[Brake switch abnormal]	Malfunction in the stop light & brake switch is detected.	Refer to Cancel Code 61. (Refer to CC - 27)
62	[Neutral Switch Failure]	Neutral position switch malfunction is detected.	Refer to Cancel Code 62. (Refer to CC - 27)
63	[Abnormality 1 of change in vehicle speed]	Malfunction of vehicle speed signal variation is detected.	Refer to Cancel Code 63. (Refer to CC - 27)
64	[Engine Sensor Failure 1]	Malfunction related to engine is detected.	Refer to Cancel Code 64. (Refer to CC - 27)
65	[Abnormality 1 of switches related to cruise control]	Cruise control command switch malfunction is detected. (When the switch is pressed ON for a long time (approximately two minutes), stuck ON condition is detected.)	Refer to Cancel Code 65. (Refer to CC - 27)

Data list diagnostics

1. OPERATION
   (1) Connect the SSM4 to the DLC3.
   (2) Start the engine.
   (3) Turn on the SSM4.
   (4) Select from the following menu items: [Each System] / [Engine Control System] / [Data monitor]

(5) Make sure that normal display is shown when operated as follows:
- Depress and release the brake pedal. (Stop light switch and brake switch turn ON).
- Turn the "ON-OFF" switch to ON.
- Turn the "-SET" switch to ON.
- Turn the "+RES" switch to ON.
- Turn the "CANCEL" switch to ON.
- Depress or release the clutch switch.
- Place the shift lever in any position other than neutral.

NOTE:
For detailed operation procedures, refer to "PC application help".

Cancel Code 11

Circuit description
In addition to switching the cruise control system to ON/OFF, the cruise control main switch can operate the following seven functions. For SET, -(COAST), TAP DOWN, use -SET switch. For RES, +(ACCEL), TAP UP, use +RES switch. For CANCEL, use CANCEL switch. As the cruise control main switch is an auto return type switch, it is ON while operated in each arrowed direction, and OFF while not operated. Inner contact of the cruise control main switch turns to ON by operating the switch. ECM identifies voltages for each switch operation.
Circuit figure

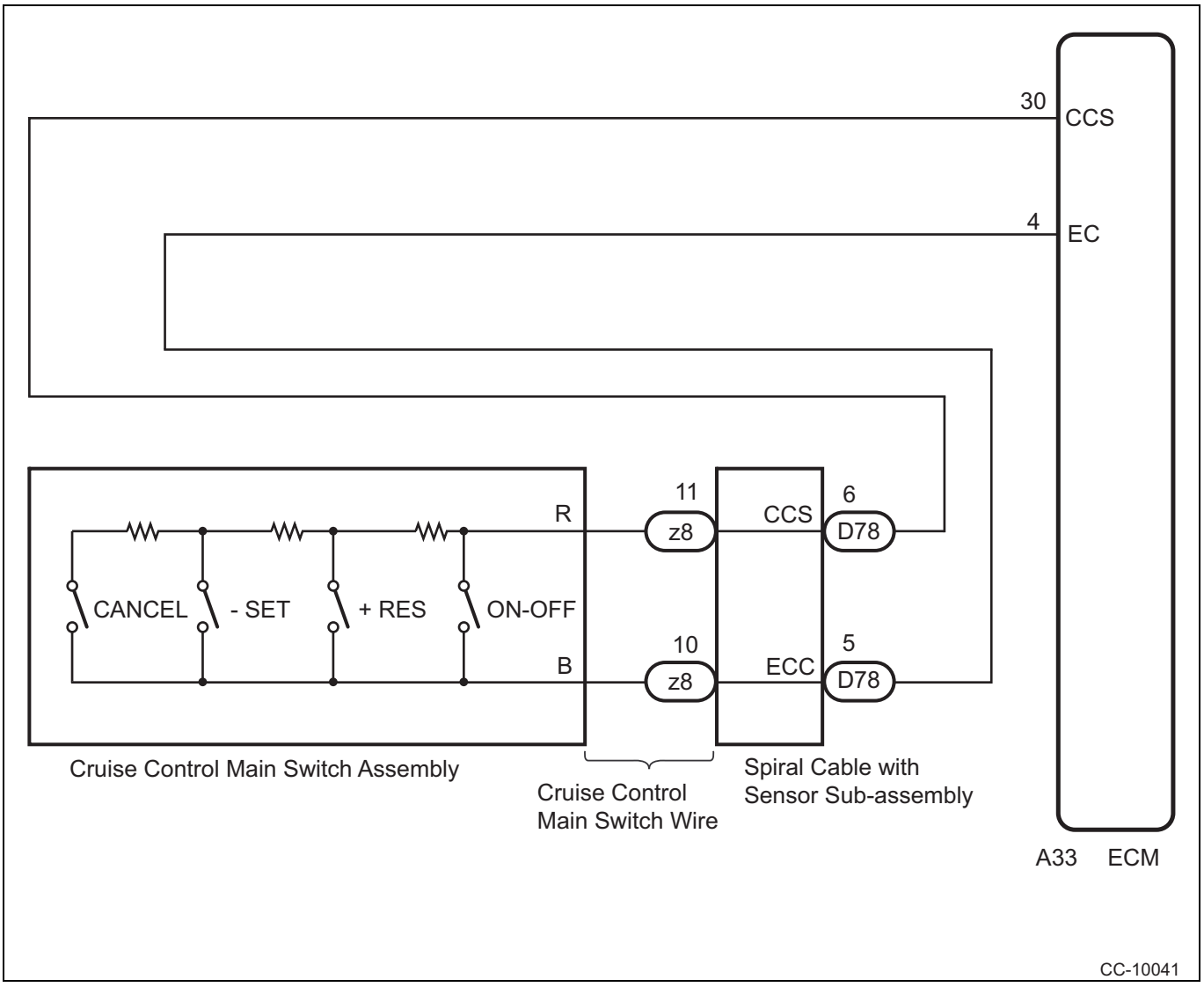

Inspection steps

1	Check cruise control main switch circuit.

(1) Remove the driver's airbag module.
(2) Disconnect the cruise control command switch connector.
(3) Turn the ignition switch to ON.
(4) Measure the voltage between connector terminal and chassis ground.

Voltage

Inspection terminals	Inspection conditions	Standard value
Z8-11 - chassis ground	IG ON	5V or more

NG → Check the roll connector, and repair or replace the harness.

OK

2	Check cruise control main switch circuit.

(1) Turn the ignition switch to OFF.
(2) Measure the resistance between connector terminal and chassis ground.

Resistance (open circuit check)

Inspection terminals	Inspection conditions	Standard value
Z8-10 - chassis ground	Always	Less than 10 Ω

NG → Check ECM and roll connector, and repair or replace the harness.

OK

3	Check cruise control main switch circuit.

(1) Measure the resistance when the cruise control main switch is not in operation.

Resistance (open circuit check)

Inspection terminals	Inspection conditions	Standard value
Cruise control main switch side connector terminal 10 - cruise control main switch side connector terminal 11	IG ON	1 MΩ or more

NG → Replace the cruise control main switch.

OK

CC

4	Check cruise control main switch circuit.

(1) Measure the resistance when the cruise control ON-OFF switch is pressed.

Resistance (open circuit check)

Inspection terminals	Inspection conditions	Standard value
Cruise control main switch side connector terminal 10 - cruise control main switch side connector terminal 11	IG ON	Less than 1 Ω

NG → Replace the cruise control main switch.

OK

5	Check cruise control main switch circuit.

(1) Measure the resistance when the CANCEL switch is pressed.

Resistance (open circuit check)

Inspection terminals	Inspection conditions	Standard value
Cruise control main switch side connector terminal 10 - cruise control main switch side connector terminal 11	Always	Approx. 1540 Ω

NG → Replace the cruise control main switch.

OK

6	Check cruise control main switch circuit.

(1) Measure the resistance when the -SET switch is pressed.

Resistance (open circuit check)

Inspection terminals	Inspection conditions	Standard value
Cruise control main switch side connector terminal 10 - cruise control main switch side connector terminal 11	Always	Approx. 630 Ω

NG → Replace the cruise control main switch.

OK

7	Check cruise control main switch circuit.

(1) Measure the resistance when the +RES switch is pressed.

Resistance (open circuit check)

Inspection terminals	Inspection conditions	Standard value
Cruise control main switch side connector terminal 10 - cruise control main switch side connector terminal 11	Always	Approx. 240 Ω

NG → Replace the cruise control main switch.

OK

Replace the ECM.

Cancel Code 12

Circuit description

When the brake pedal is released, ECM terminal BRK1 receives positive (+) battery voltage through IG2 fuse. While the brake pedal is depressed, the stop light switch sends signals to ECM terminal BRK1 and BRK2. When terminal BRK1 receives the signal, ECM cancels the cruise control driving.

Circuit figure

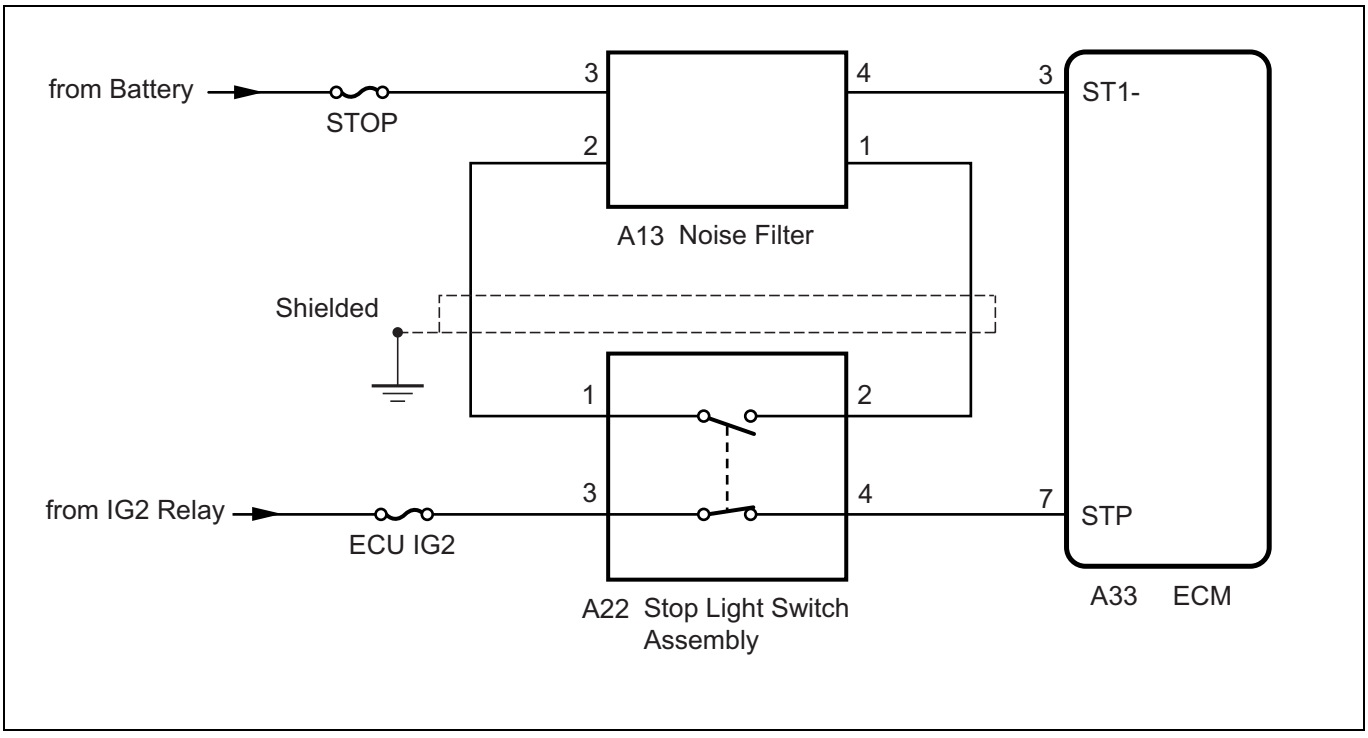

Inspection steps

1	Check brake switch.

(1) Check the brake switch. (Refer to LE - 78)

Criteria: The switch and its installation position is correct.

NG → Replace the switch main body or adjust its installation position.

OK

2	Check brake switch circuit.

(1) Turn the ignition switch to OFF.
(2) Disconnect the parking brake switch connector.
(3) Turn the ignition switch to ON.
(4) Measure the voltage between connector terminal and chassis ground.
Voltage

Inspection terminals	Inspection conditions	Standard value
A22-1 - chassis ground	Always	10V or more
A13-3 - chassis ground	Always	10V or more

NG → Check the fuse, and repair or replace the harness.

OK

3	Check brake switch circuit.

(1) Turn the ignition switch to OFF.
(2) Disconnect the ECM connector.
(3) Turn the ignition switch to ON.
(4) Measure the resistance between ECM connector and brake switch.
Resistance (open circuit check)

Inspection terminals	Inspection conditions	Standard value
A33-7 (BRK1) - A22-4	Always	Less than 10 Ω
A33-3 (BRK2) - A22-2	Always	Less than 10 Ω

NG → Repair or replace the harness.

OK

Replace the ECM.

Cancel Code 13

Circuit description
When the clutch pedal is released, ECM receives positive (+) battery voltage through IG2 fuse. While the clutch pedal is depressed, the clutch switch sends signals to ECM terminal CLT. When terminal CLT receives the signal, ECM cancels the cruise control driving.

Circuit figure

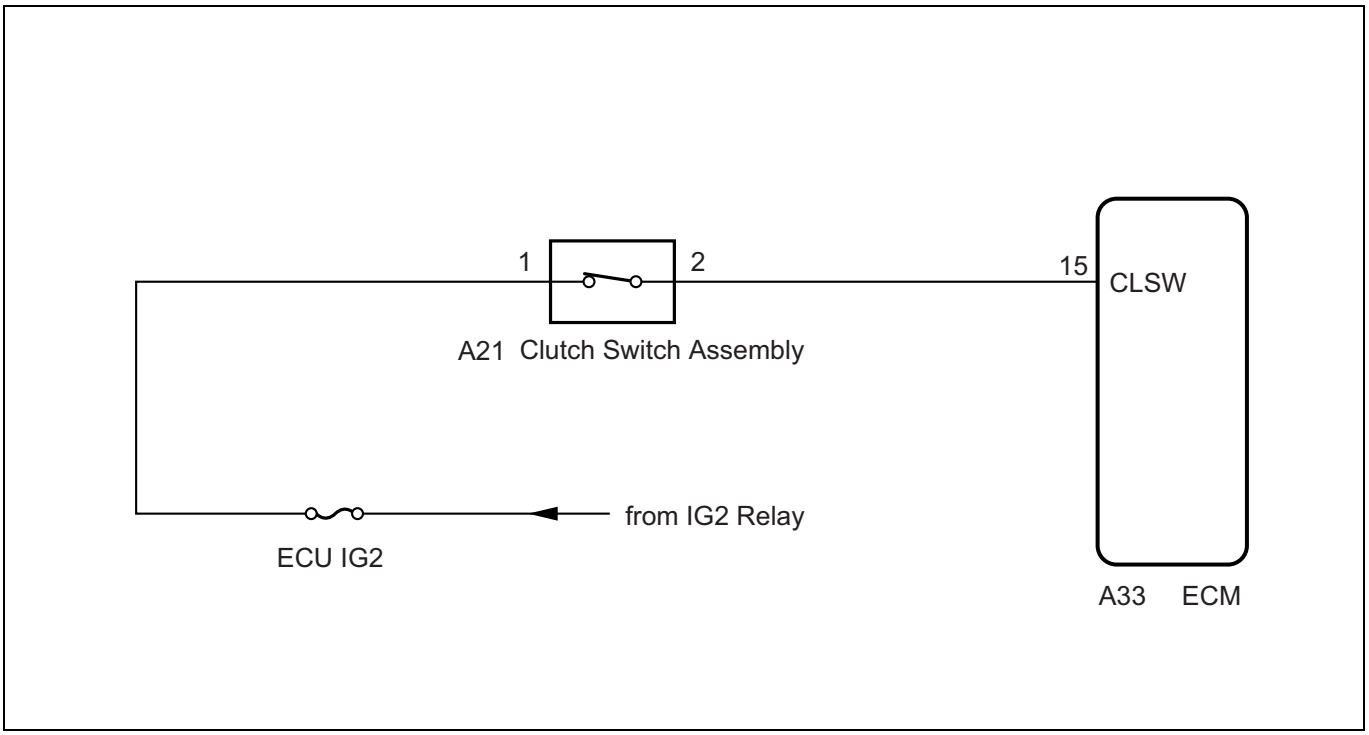

Inspection steps

CC

1	Check clutch switch.

(1) Check the clutch switch. (Refer to CL - 28)
Criteria: The switch and its installation position is correct.

NG → Replace the switch main body or adjust its installation position.

OK

2	Check clutch switch circuit.

(1) Turn the ignition switch to OFF.
(2) Disconnect the clutch switch connector.
(3) Turn the ignition switch to ON.
(4) Measure the voltage between connector terminal and chassis ground.
Voltage

Inspection terminals	Inspection conditions	Standard value
A21-1 - chassis ground	Always	10V or more

NG → Check the fuse, and repair or replace the harness.

OK

3	Check clutch switch circuit.

(1) Turn the ignition switch to OFF.

(2) Disconnect the ECM connector.
(3) Turn the ignition switch to ON.
(4) Measure the resistance between ECM connector and clutch switch.

Resistance (open circuit check)

Inspection terminals	Inspection conditions	Standard value
A33-15 (CLT) - A21-2	Always	Less than 10 Ω

NG → Repair or replace the harness.

OK

Replace the ECM.

Cancel Code 14

Circuit description

Detected when select lever is set in the neutral position, or when malfunction related to neutral position switch occurs.

Circuit figure

CC

Transmission A/T:

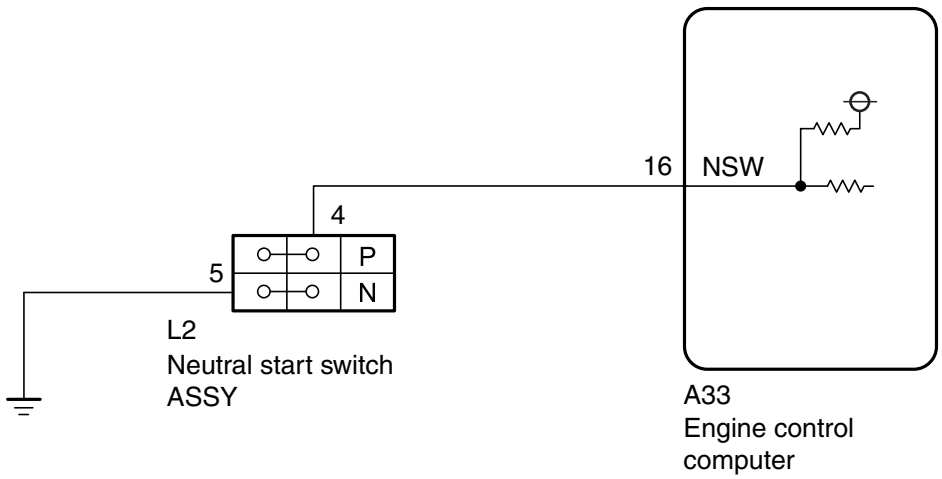

Inspection steps

1	Check neutral start switch circuit.

(1) Disconnect the connector for neutral start switch ASSY.
(2) Turn the ignition switch to ON.
(3) Measure the voltage between the terminals.

Voltage

Inspection terminals	Inspection conditions	Standard value
L2-4 - chassis ground	Always	10V or more

NG → Repair or replace the harness.

OK

2 Check neutral start switch circuit.

(1) Turn the ignition switch to OFF.
(2) Measure the resistance between the terminals.

Resistance

Inspection terminals	Inspection conditions	Standard value
L2-5 - chassis ground	Always	Less than 10 Ω

NG → Repair or replace the harness.

OK

3 Check neutral start switch.

(1) Perform a unit inspection of neutral start switch. (Refer to AT - 190)
Criteria: No fault is found.

NO → Replace neutral start switch.

YES

Replace the ECM.

Cancel Code 15

Circuit description
Detected when CANCEL switch is pressed or malfunction related to CRUISE switch occurs.
Inspection steps
Perform the inspection according to the Cancel Code 11. (Refer to CC - 16)

Cancel Code 16

Circuit description
Detected when ignition switch is turned to OFF or malfunction related to the ignition switch occurs.

Circuit figure

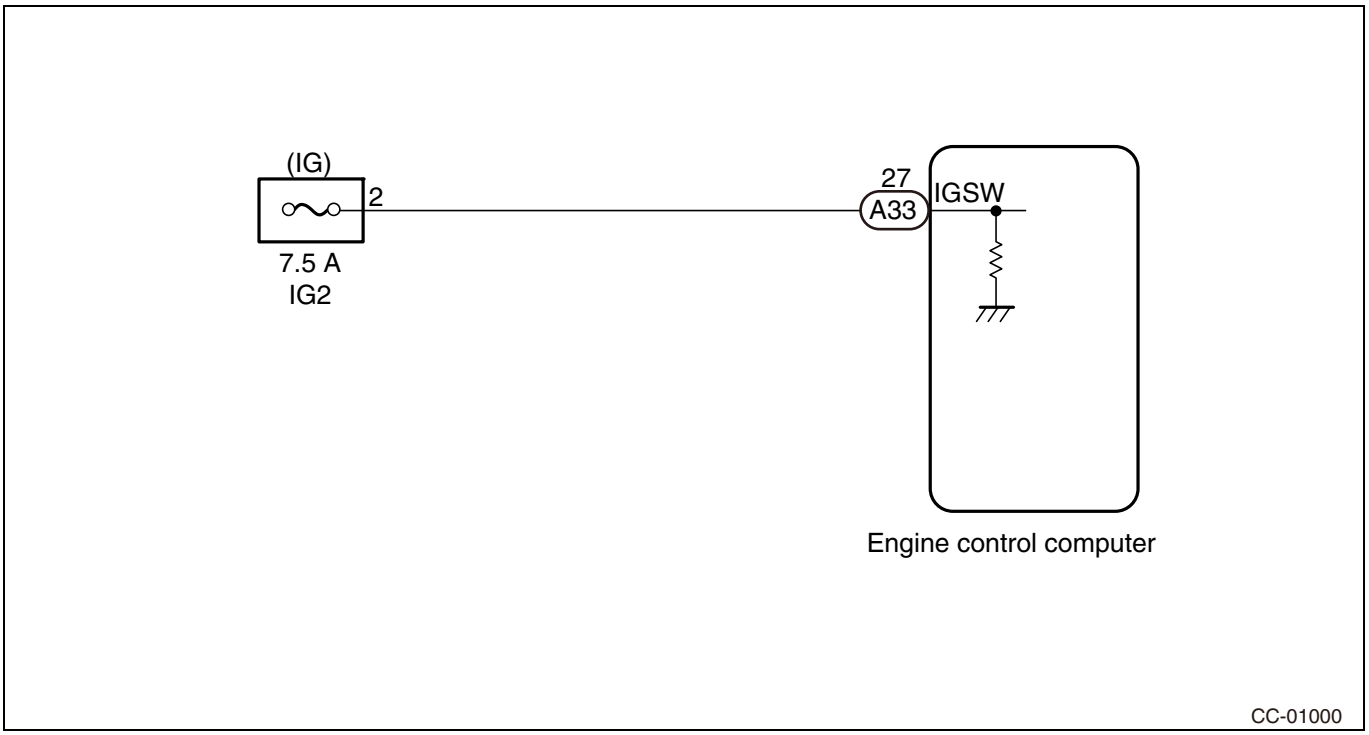

CC

Inspection steps

1	Check ignition switch circuit.

(1) Turn the ignition switch to OFF.
(2) Disconnect the ECM harness connector.
(3) Turn the ignition switch to ON.
(4) Measure the voltage between harness connector terminal and chassis ground.

Voltage

Inspection terminals	Inspection conditions	Standard value
A33-27 (IGSW) - chassis ground	Always	10V or more

NG → Check the fuse, or repair or replace the harness.

OK

Check poor contact of connector.

Cancel Code 22

Circuit description

Malfunction related to vehicle speed sensor is detected.

Inspection steps

1	Check ABS or VDC warning light.

(1) Turn the ignition switch to ON.
(2) After the initial operation of combination meter is completed, check if ABS or VDC warning light continues to illuminate.
Criteria: Warning light is OFF.

NO → Check VSC system. (For procedures, refer to BC - 9)

YES

2	Check CAN communication system.

(1) Check CAN communication system. (Refer to NW - 30)
Criteria: No fault is found.

NO → Repair according to the CAN communication system.

YES

Replace the ECM.

CC

Cancel Code 24

Circuit description
Malfunction in cruise control-related switch is detected.
Inspection steps
Perform the inspection according to the Cancel Code 11. (Refer to CC - 16)

Cancel Code 31

Circuit description
Engine speed signal malfunction is detected.
Abnormal increase of engine speed is detected.
Gear is placed in 1st or Reverse position.
Inspection steps
After driving at the 2nd gear position or higher, perform the cruise setting again. If a cancel code is not detected, it is normal.

Cancel Code 32

Circuit description
Detected when the vehicle speed is out of the system controllable range.
Inspection steps
Increase vehicle speed high enough to allow the cruise control to function, and then perform setting operation again.
If cancel code is still detected after setting cruise again, perform the inspection according to Cancel Code 22. (Refer to CC - 24)

Cancel Code 34

Circuit description
The vehicle has been driven at a speed higher than set speed for a long time (approximately 10 minutes) during cruise driving.
This cancel code is detected when driving for a long period of time at a speed higher than appropriate for cruise control setting by operating the accelerator pedal.
Inspection steps
Perform the cruise control setting operation again. If the cancel code is not detected, it is normal.

Cancel Code 35

Circuit description
Detected when it is impossible to perform the vehicle speed feedback.
Set vehicle speed cannot be kept for some reasons (steep uphill, unreleased parking brake, etc.) during cruise driving. Cancel code is detected when driving condition is not suitable for cruise control.
Inspection steps
Perform cruise set operation again after clearing the possible cause.

Cancel Code 41

Circuit description
VDC/TCS has operated.
Vehicle dynamics control (VDC) or TCS is operated during cruise driving or cruise setting.
Inspection steps
Check VSC system. (Refer to BC - 9)

Cancel Code 43

Circuit description
- The situation that some or all functions for ABS/VDC can not work is detected.
  During cruise driving or cruise setting, the situation that some or all functions for ABS/VDC can not work is detected.
- CRUISE indicator does not illuminate even though you pressed the CRUISE switch before starting the engine.
  Detected when the CRUISE switch is pressed during the initial diagnosis of ABS/VDC. It is normal if the CRUISE indicator illuminates when you press the CRUISE switch again after starting the engine and confirming that the initial illumination of the ABS/VDC warning light has been ended.

Inspection steps
Check VSC system. (Refer to BC - 9)

Cancel Code 45

Circuit description
Combination meter malfunction is detected.
Combination meter malfunction is detected during cruise driving or cruise setting.
Inspection steps
Check CAN communication system. (Refer to NW - 30)

Cancel Code 49

Circuit description
Automatic transmission malfunction is detected.

Automatic transmission malfunction is detected during cruise driving or cruise control setting.
Inspection steps
Check the automatic transmission system. (Refer to AT - 15)

Cancel Code 61

Circuit description
Malfunction in the stop light & brake switch is detected.
Inspection steps
Perform the inspection according to the Cancel Code 12. (Refer to CC - 19)

Cancel Code 62

Circuit description
Neutral position switch malfunction is detected.
Inspection steps
Perform the inspection according to the Cancel Code 14. (Refer to CC - 22)

Cancel Code 63

Circuit description
Malfunction of vehicle speed signal variation is detected.
Inspection steps
Perform the inspection according to the Cancel Code 22. (Refer to CC - 24)
NOTE:
Additionally, this cancel code may be detected when the vehicle is started with a sudden acceleration on a low μ(friction) test road with VDC OFF. In this case restart the engine and perform the cruise control setting again. If the cancel code is not detected, the condition is normal.

Cancel Code 64

Circuit description
Malfunction related to engine is detected.
Inspection steps
Check the engine control. (Refer to ES - 19)

Cancel Code 65

Circuit description
Cruise control main switch malfunction is detected.
Inspection steps
Perform the inspection according to the Cancel Code 11. (Refer to CC - 16)

CRUISE CONTROL MAIN SWITCH

COMPONENTS

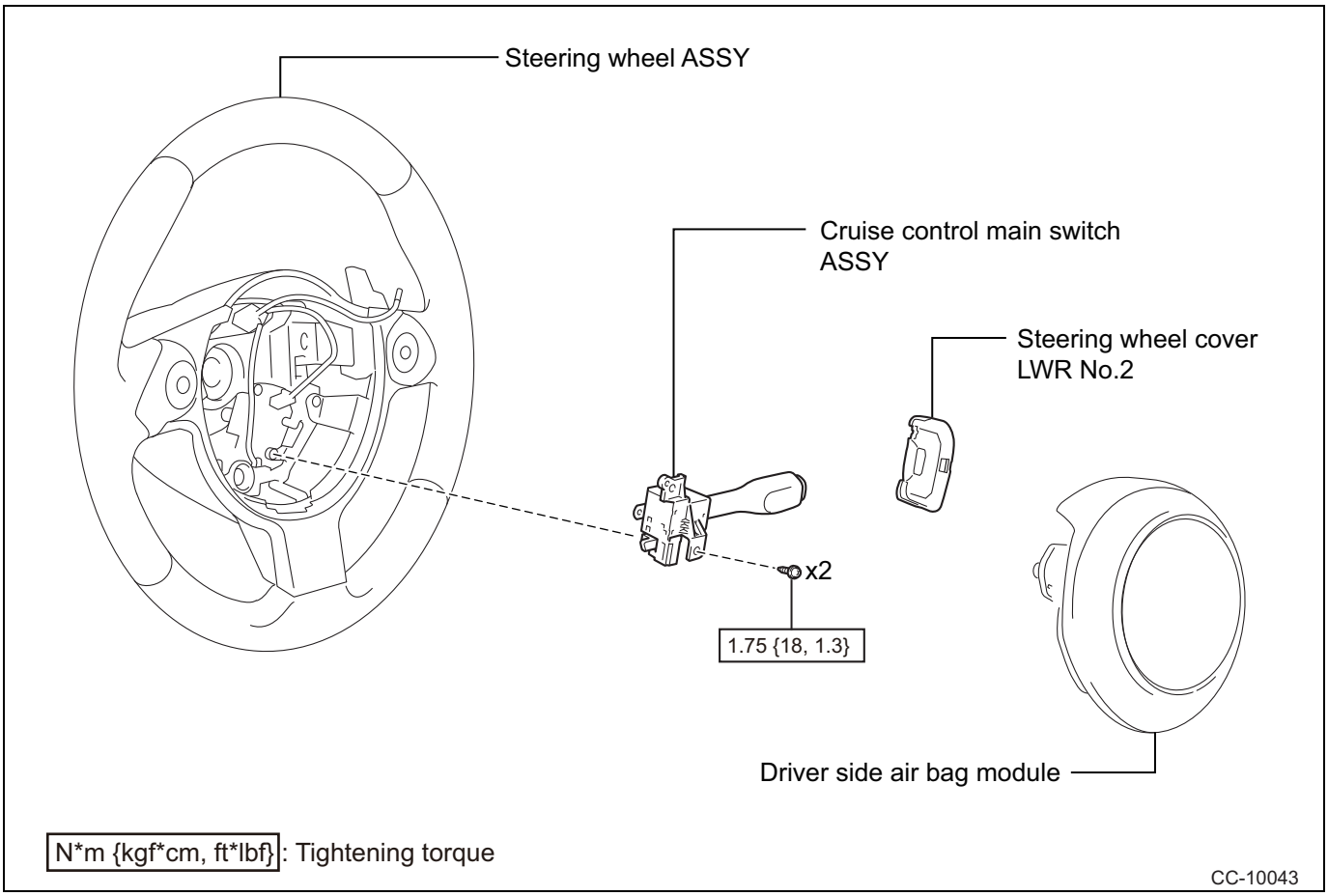

REMOVAL

1. Disconnection of the battery ground terminal (Refer to IN - 6)
   WARNING:
   Airbag and pretensioner system are equipped with backup power supply. Therefore, if any operation is started within 60 seconds after disconnecting the battery ground terminal, the airbag can deploy.

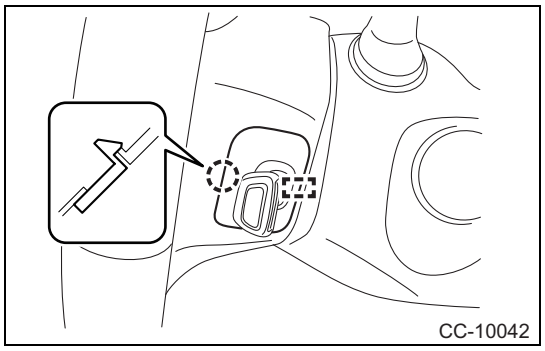

2. Removal of the steering wheel cover LWR No. 2
   (1) Release the claw.
   (2) Release the claw of the guide, and remove the steering wheel cover LWR No. 2.

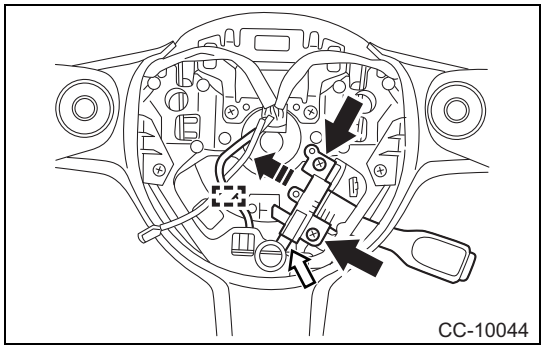

3. REMOVE CRUISE CONTROL MAIN SWITCH ASSEMBLY
   (1) Remove the harness from the holder, and disconnect the connector.
   (2) Remove the 2 screws.
   (3) Remove the cruise control main switch as shown in the figure.

INSTALLATION

1. INSTALL CRUISE CONTROL MAIN SWITCH ASSEMBLY
   (1) Install the cruise control main switch with the 2 crews.
   Standard value:Cruise control main switch
   T=1.75N·m {18kgf·cm} {1.3ft·lbf}
   (2) Connect the connector and secure the harness to the holder.
2. Installation of the steering wheel cover LWR No. 2
   (1) Fit in the guide.
   (2) Fit the claw, and install the steering wheel cover LWR No. 2.
3. Connection of the battery ground terminal
   Standard value:T=6.0N·m {61kgf·cm} {4.43ft·lbf}

INSPECTION

1. INSPECT CRUISE CONTROL MAIN SWITCH ASSEMBLY
   (1) Measure the resistance according to the value(s) in the table below.

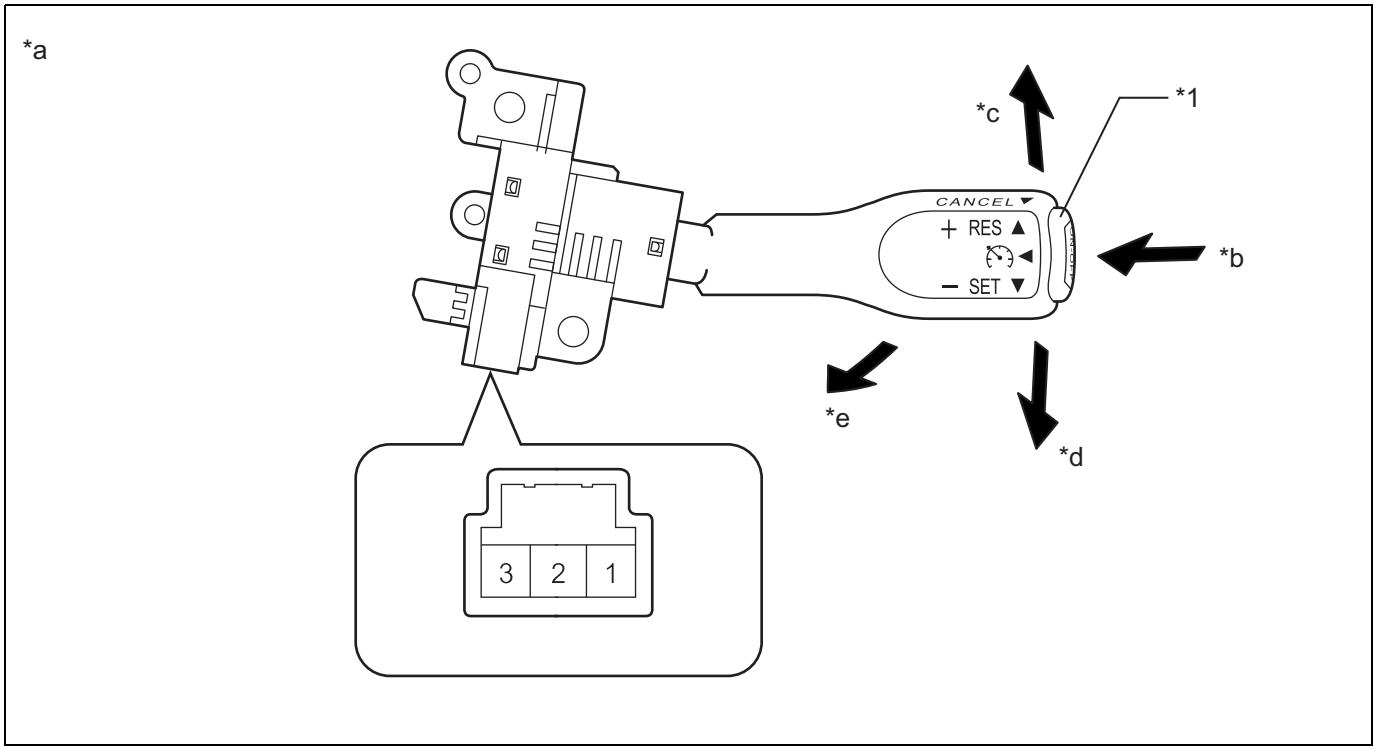

Text in Illustration

*1	Cruise Control Main Switch Assembly (ON-OFF button)	-	-
*a	Component without harness connected (Cruise Control Main Switch Assembly)	*b	ON-OFF
*c	+/RES	*d	-/SET
*e	CANCEL	-	-

Standard Resistance

Tester Connection	Switch Condition	Specified Condition
1 - 3	All switch released	1 MΩor higher
	Cruise control Main switch Assembly (ON-OFF button) pushed	Below 1 Ω
	+/RES switch ON	235 to 245 Ω
	-/SET switch ON	617 to 643 Ω
	CANCEL switch ON	1509 to 1571 Ω

Automatic transmission / transaxle

Automatic transmission system

Precautions AT-4
Definitions of terms AT-4
Function inspection AT-5
Parts location AT-10
List of diagnostic codes AT-11
Symptom table AT-13
Description of functions AT-14
How to troubleshoot AT-15
Check list for interview AT-17
Checking / clearing diagnostic codes AT-17
Freeze frame data AT-18
Inspection for problems that do not normally occur AT-19
Work support AT-19
Circuit figure AT-20
ECM terminal arrangement AT-24
Data monitor / active test AT-29
Failsafe list AT-34
B1016 . . . . . AT-37
P0601 . . . . . AT-39
P062F AT-40
P0707 . . . . . AT-41
P0708 . . . . . AT-41
P0711 . . . . . AT-45
P0712 . . . . . AT-50
P0713 . . . . . AT-50
P0716 . . . . . AT-53
P0717 . . . . . AT-57
P0721 . . . . . AT-60
P0722 . . . . . AT-64
P0729 . . . . . AT-67
P0751 . . . . . AT-72
P0752 . . . . . AT-72
P0756 . . . . . AT-78
P0757 . . . . . AT-78
P0761 . . . . . AT-84
P0762 . . . . . AT-84
P0781 . . . . . AT-84
P0766 . . . . . AT-92
P0767 . . . . . AT-92
P0776 . . . . . AT-92
P0882 . . . . . AT-99
P0961 . . . . . AT-101
P0962 . . . . . AT-101
P0963 . . . . . AT-101
P0965 . . . . . AT-105
P0966 . . . . . AT-105
P0967 . . . . . AT-105
P0973 . . . . . AT-109

P0974 . . . . . AT-109
P0976 . . . . . AT-112
P0977 . . . . . AT-112
P0979 . . . . . AT-115
P0980 . . . . . AT-115
P0982 . . . . . AT-118
P0983 . . . . . AT-118
P0985 . . . . . AT-121
P0986 . . . . . AT-121
P160A AT-124
P1817 . . . . . AT-125
P2714 . . . . . AT-127
P0894 . . . . . AT-127
P2719 . . . . . AT-137
P2720 . . . . . AT-137
P2721 . . . . . AT-137
P2757 . . . . . AT-140
P2758 . . . . . AT-140
P2762 . . . . . AT-145
P2763 . . . . . AT-145
P2764 . . . . . AT-145
U0073 . . . . . AT-149
U0401 . . . . . AT-149
U0416 . . . . . AT-149
U0422 . . . . . AT-149
U0423 . . . . . AT-149
U0100 . . . . . AT-151
U0122 . . . . . AT-151
U0140 . . . . . AT-151
U0155 . . . . . AT-151
Sports sequential shift switch system AT-152
Paddle shift switch system AT-154
Pattern select switch system AT-157

Automatic transmission fluid

Replacement AT-161
Adjustment. AT-163

Speed sensor

Exploded view AT-168
Removal AT-169
Installation AT-170
Unit inspection AT-170

Transmission wire

Exploded view AT-171
Removal AT-172
Installation AT-174
Unit inspection AT-175

Transmission valve body ASSY

Exploded view AT-176
Removal AT-177
Disassembly AT-179
Assembly AT-180
Installation AT-181
Unit inspection AT-182

AT

Neutral start switch ASSY
Exploded view AT-186
Removal AT-186
Installation AT-187
Adjustment AT-189
On-vehicle inspection AT-189
Unit inspection AT-190

Oil cooler ASSY
Exploded view AT-191
Removal AT-192
Installation AT-194

Select lever
Exploded view AT-196
Removal AT-199
Disassembly AT-200
Assembly AT-204
Installation AT-207
Adjustment AT-208
On-vehicle inspection AT-210
Unit inspection AT-211

Transmission shift switch
Exploded view AT-212
Removal AT-212
Installation AT-213
Unit inspection AT-213

Pattern select switch ASSY
Exploded view AT-214
Removal AT-214
Installation AT-214
Unit inspection AT-215

Extension housing rear oil seal
Exploded view AT-216
Replacement AT-216

Automatic transmission ASSY
Exploded view AT-218
Removal AT-220
Installation AT-227

Automatic transmission unit
Exploded view AT-233
Disassembly AT-241
Unit inspection AT-268
Assembly AT-282

Torque converter & drive plate
Inspection AT-320

Transmission control computer ASSY
Exploded view AT-322
Removal AT-322
Installation AT-323

Automatic transmission system

Precautions

CAUTION:

Execute reset memory operation (AT initialization) when replacing the automatic transmission ASSY, engine ASSY, valve body ASSY, transmission wire, or TCM. (Refer to AT - 17)

NOTE:

Reset memory operation is not completed just by disconnecting the battery cable.

1. Precautions for removal and installation procedures
   (1) Since the automatic transmission consists of parts with a very precise finish, careful inspection is required before assembling these parts. Even a small scratch may cause liquid leakage or affect the performance. Instructions in this chapter are organized so that the work for only 1 component group is performed at a time. This is to avoid confusion which can occur when parts having similar appearance but for different SUB-ASSY exist in the same workbench at the same time. Inspect and repair the component group from the converter housing side. Try to complete the inspection, repair, or assembly work before proceeding to the next component group. If any defect is found in a specific component group during assembly, immediately check and repair the group. When a component group cannot be assembled due to the parts order, be sure to store all parts of the group in another container while another component group is being disassembled, checked, and assembled. The auto fluid (ATF) WS is recommended.
   (2) Wash all of the removed parts and blow through all of the liquid passages and holes with compressed air.
   (3) Dry all parts with compressed air. Never dry the parts using rugs and cloths in the work area.
   (4) When using compressed air, do not point the air outlet toward you to prevent auto fluid and detergent from being blown to your face by mistake.
   (5) Use only the recommended automatic transmission fluid or appropriate detergent for cleaning.
   (6) After washing, arrange the parts in the correct order for efficient inspection, repair, and assembly.
   (7) When removing the valve body, be sure to keep each valve with the corresponding spring.
   (8) Soak new discs (for replacement) of the brake and clutch in ATF for at least 15 minutes before the assembly.
   (9) Before the assembly, apply ATF to all of the oil seal rings, clutch discs, clutch plates, rotating parts, and sliding surfaces.
   (10) Replace all gaskets and rubber O-rings with new parts.
   (11) Do not apply adhesive cement to gaskets and similar parts.
   (12) Check that the both ends of the snap ring do not overlap the notch and the snap ring is installed in the groove correctly.
   (13) When replacing a worn bushing, be sure to replace the SUB-ASSY including the bushing.
   (14) Check for wear and damage of the thrust bearing and race. Replace them as required.
   (15) Observe the following precautions when handling FIPG material.
      - Completely remove the old sealant (FIPG) material from the gasket surface using a razor or gasket scraper.
      - Carefully clean all the components and remove materials that are coming off.
      - Clean the both surfaces of the seal with appropriate detergent.
      - The parts must be assembled within 10 minutes after sealant (FIPG) is applied. If it is impossible, remove the sealant (FIPG) material and apply it again.

AT

Definitions of terms

Term	Definition
Monitor description	Description of what TCM monitor is and the failure detection method (purpose and detail of observation)
Applicable diagnostic codes	Diagnostic codes
Standard enabling condition	Conditions required so that TCM can detect failures. When all of the required conditions are satisfied, TCM sets diagnostic codes if the observation value exceeds the failure threshold.
Operation order	Priority order applied to observation when multiple sensors and components are used for failure detection. When a sensor is observed, the next sensor or component is not observed until the observation is completed.
Requirement sensor/component	The sensor and component used by TCM for failure detection
Operation frequency	The number of times that TCM checks failure per driving cycle “Once per driving cycle” means that TCM detects failure only 1 time during a single driving cycle. “Consecutive” means that TCM detects failure each time the enabling condition is satisfied.
Period	The minimum time period in which consecutive deviation of the observation value must be detected before TCM sets diagnostic codes. The time measurement starts after “standard enabling condition” is satisfied.
Failure threshold	If the value is exceeded, TCM concludes that a failure is found and sets diagnostic codes.

Term	Definition
MIL operation	The timing of MIL illumination after a defect is detected. “Immediate” means that MIL illuminates at the moment when TCM judges that a failure is found. “2nd driving cycle” means that MIL illuminates when TCM detects the same failure in the 2nd driving cycle.
Component operation range	Normal operation range of the sensor and solenoid under the normal driving condition Use these ranges as reference. Do not use them to judge whether the sensor or solenoid has a defect or not.

Function inspection

1. Check of shift lock operation
   (1) Shift the select lever to the P position.
   (2) Check that the select lever cannot be shifted to ranges other than P position when it is operated.
   (3) Check that the select lever can be shifted to ranges other than P position with IG ON and the brake pedal depressed.
2. Check of shift lock release button operation
   (1) Remove the button cover.
   (2) Use a driver or other tool to check that the select lever can be shifted to ranges other than P position when it is operated with the shift lock release button pressed.
3. Time lag check
   CAUTION:
   - Always perform the inspection after the engine check and adjustment.
   - Perform the inspection at an oil temperature (60 to 90°C {140 to 194°F}) in normal driving temperature.
   - Perform the inspection with the A/C OFF.

   (1) Apply the parking brake and set the wheel stoppers.
   (2) Start the engine.
   (3) Shift from N position to D or R position with idling while depressing the brake pedal, and measure the time until a small shock is felt.
   Standard value: N→D position 1.2 seconds or less
   N→R position 1.5 seconds or less
   CAUTION:
   - Make measurements 3 times and take the average value.
   - Allow 1 minute interval when performing consecutive measurements.
4. Stall speed check
   CAUTION:
   - Always perform the inspection after the engine check and adjustment.
   - Perform the inspection at an oil temperature (60 to 90°C {140 to 194°F}) in normal driving temperature.
   - Perform the inspection with the A/C OFF.
   - Do not perform the operation continuously for 5 seconds or more. (Working time for the sequence from the accelerator full close, full open, stall speed reading, to the accelerator full close) Ignoring this instruction causes engine oil and ATF deterioration which has adverse effect on the clutch and brake.
   - Perform in a place with high μ(friction coefficient) such as on asphalt to prevent the tires from spinning.
   - After performing the stall test, be sure to cool down the engine for at least 1 minute with the select lever set in P or N position, and at an idle speed of 1200 r/min or less.
   - If the stall speed is higher than the specified range, finish the stall test in as short a time as possible, in order to prevent the automatic transmission from being damaged.
   - Perform the stall test in normal mode.

   (1) Firmly apply the parking brake and set the wheel stoppers.
   (2) Start the engine.
   (3) Firmly depress the parking brake with left foot, shift to D position, and quickly read the maximum engine speed when the accelerator pedal is fully depressed with right foot.

Standard value

Stall speed [r/min]	2350±250

5. Line pressure check
   CAUTION:
   - Wash the equipment and hoses with appropriate detergent before and after measurement.
   - Always perform the inspection after the engine check and adjustment.
   - Perform the inspection at an oil temperature (60 to 90°C {140 to 194°F}) in normal driving temperature.
   - Perform the inspection with the A/C OFF.

- Do not perform the inspection continuously for 5 seconds or more at stall. (Working time for the sequence from the accelerator full close, full open, stall speed reading, to the accelerator full close) Ignoring this instruction causes engine oil and ATF deterioration which has adverse effect on the clutch and brake.
- After performing the stall test, be sure to cool down the engine for at least 1 minute with the select lever set in P or N position, and at an idle speed of 1200 r/min or less.
- If the stall speed is higher than the specified range, finish the stall test in as short a time as possible, in order to prevent the automatic transmission from being damaged.
- Perform the stall test in normal mode.

(1) Remove the under cover front AL.
(2) Remove the under cover COMPL T/M.
(3) Remove the exhaust pipe ASSY FR.
(4) Attach the SST on the transmission.
SST 18681AA040, 498897700, 498575400
CAUTION:
- Use 18681AA040 with genuine O-ring (17006AA000) attached.
- Route the hose so that it does not contact the exhaust pipe.

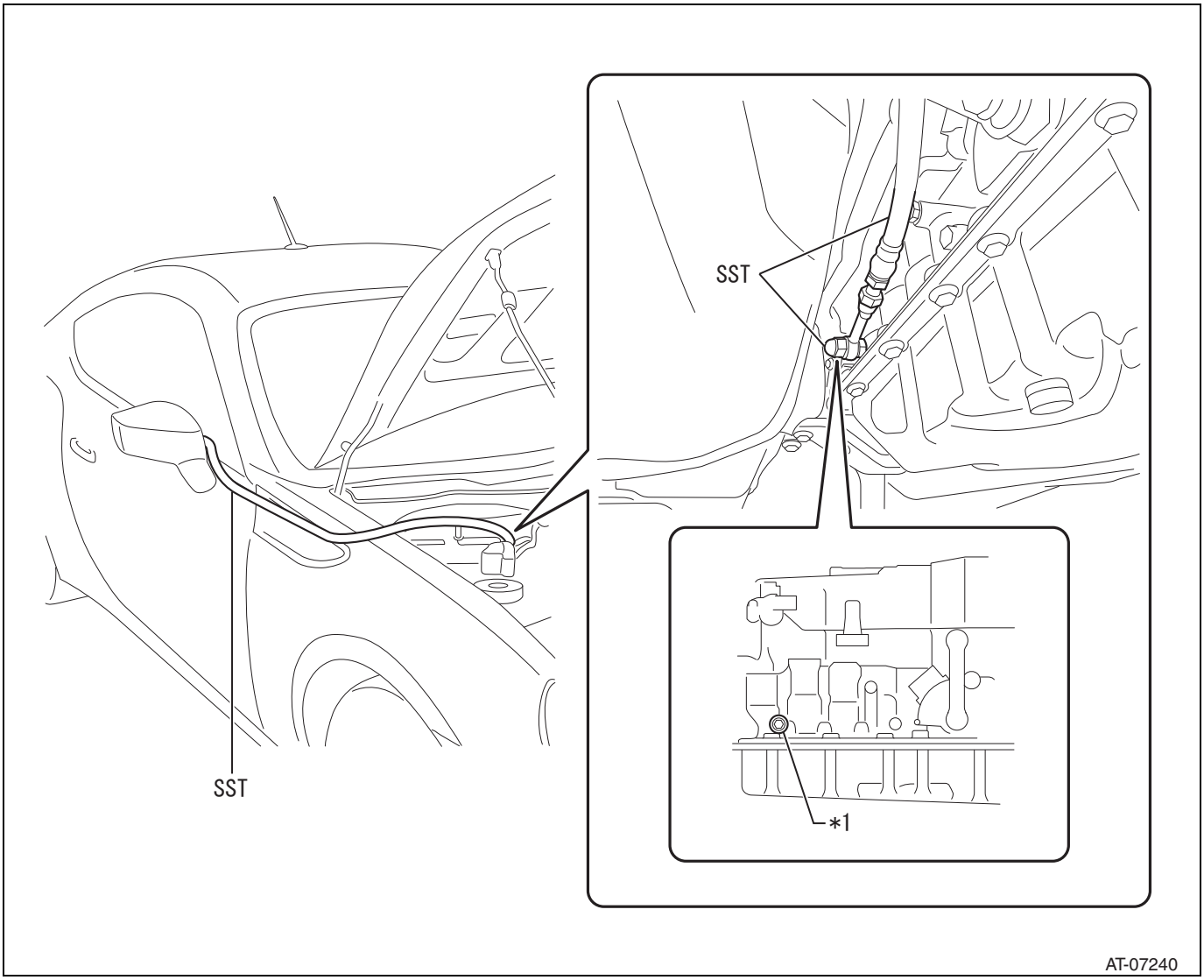

AT-07240

Captions in illustration

*1	Test plug

(5) Install the exhaust pipe ASSY FR.
(6) Firmly apply the parking brake and set the wheel stoppers.
(7) Start the engine.
(8) Firmly depress the brake pedal with left foot and shift to D or R position, then check the hydraulic pressure at idling and stalling.

Standard value

Shift position	While idling [MPa {kgf/cm^2}]	While stalling [MPa {kgf/cm^2}]
D position	0.35 to 0.43 {3.6 to 4.4}	1.20 to 1.38 {12.2 to 14.0}
R position	0.76 to 0.95 {7.7 to 9.7}	1.41 to 1.63 {14.4 to 16.6}

NOTE:
When there is an open or short circuit in the line pressure control solenoid ASSY (SLT) system, the line pressure reaches the maximum.

6. Shift table

WARNING:
Observe the legal speed limit and confirm the safety on the road.
CAUTION:
- Always perform the inspection after the engine check and adjustment.
- Perform the inspection at an oil temperature (40 to 110°C {104 to 230°F}) in normal driving temperature.
- Perform the inspection at an engine coolant temperature of 60 to 90°C {140 to 194°F}.
- Turn the A/C and the cruise control OFF.

NOTE:
- The values equal to or higher than the maximum speed are for reference because they cannot be achieved.
- Do not shift to 6th gear when the AT oil temperature is less than 20°C {68°F}.
- Lockup is prohibited when the AT oil temperature is less than 20°C {68°F}.
- Lockup does not occur at 1st gear of manual mode.
- Acceleration slipping lock-up is prohibited when the AT oil temperature is less than 40°C {104°F} or 110°C {230°F} or more.
- Reduction slipping lock-up is prohibited when the AT oil temperature is less than 20°C {68°F} or 110°C {230°F} or more.

(1) Shift table

(a) Use SSM4 to select [Data monitor], and then select [AT Speed], [Control the Shift Position], [Accel. Opening Angle], [A/T Oil Temperature], and [Coolant Temp].

(b) Confirm [AT Speed] when [Control the Shift Position] is up-shifted.

Throttle opening angle	100 %					5 to 10 %				
Shift point	1→2	2→3	3→4	4→5	5→6	1→2	2→3	3→4	4→5	5→6
D position (km/h {MPH})	47 to 53 {29 to 33}	96 {60}	142 {88}	201 {125}	282 {175}	12 {7}	20 {12}	30 {19}	48 {30}	59 {37}

(2) Lock-up

(a) Use SSM4 to select [Data monitor], and then select [AT Speed], [Control the Shift Position], [Accel. Opening Angle], [Engine Speed], [Turbine Revolution Speed], [Coolant Temp.], and [Lock up status].

(b) Confirm that the difference between [Engine Speed] and [Turbine Revolution Speed] is 50 r/min or less.

Throttle opening angle	5 to 10 %
Lock-up	ON
Gear position	6th
D position (km/h {MPH})	57 {35} or more

(3) Manual downshift permission vehicle speed

Shift position	M6→M5	M5→M4	M4→M3	M3→M2	M2→M1
Vehicle speed (km/h {MPH})	284 {176}	201 {125}	142 {88}	95 {59}	53 {33}

7. Driving test

WARNING:
Observe the legal speed limit and confirm the safety on the road.
CAUTION:
- Always perform the inspection after the engine check and adjustment.
- Perform the inspection at an oil temperature (60 to 90°C {140 to 194°F}) in normal driving temperature.
- Turn the A/C and the cruise control OFF.

AT

Driving test list

Check item	Inspection and confirmation procedure
D position shift function	Check shifting of 1st ←→2nd ←→3rd ←→4th ←→5th ←→6th during normal driving on city streets.
Shift shock level during D position driving	Check the shock level at each up-shifting during normal driving.
Kick-down function	• Perform kick-down operation in each gear and check for the down-shifting. • Check the shock level at kick down.
Engine brake operation	• Shift the select lever to "-" while driving in M position 6th gear (approx. 70 to 80 km/h {43 to 50 MPH}) and check the engine brake operation in 5th gear. • Shift the select lever to "-" while driving in M position 5th gear (approx. 55 to 65 km/h {34 to 40 MPH}) and check the engine brake operation in 4th gear. • Shift the select lever to "-" while driving in M position 4th gear (approx. 40 to 50 km/h {25 to 31 MPH}) and check the engine brake operation in 3rd gear. • Shift the select lever to "-" while driving in M position 3rd gear (approx. 25 to 35 km/h {16 to 22 MPH}) and check the engine brake operation in 2nd gear. • Shift the select lever to "-" while driving in M position 2nd gear (approx. 10 to 20 km/h {6 to 12 MPH}) and check the engine brake operation in 1st gear.
Shift point at accelerator pedal in full throttle	Start in D position with the accelerator pedal in full throttle and check that the up-shifting speed of 1st →2nd conforms to the shift point. (Refer to the shift table for shift point speeds)
Lock-up function	When the accelerator is lightly depressed while driving on a flat road at a constant speed within the lock-up speed range, check that the engine speed does not change greatly.
P position operation	Stop the vehicle on an uphill grade (approx. 5° or more) and shift to P position, then check that the vehicle does not move when the parking brake is released.
Noise and vibration	Check for noise and vibration during driving and shifting.
Hill climb/down control function	• Check that up-shifting is performed at higher engine speed than driving on a level road when climbing a hill in D position. • Check that down-shifting is performed at higher engine speed than driving on a level road when descending a hill in D position.
Oil leakage	Check that there is no oil leakage after the driving test.

AT

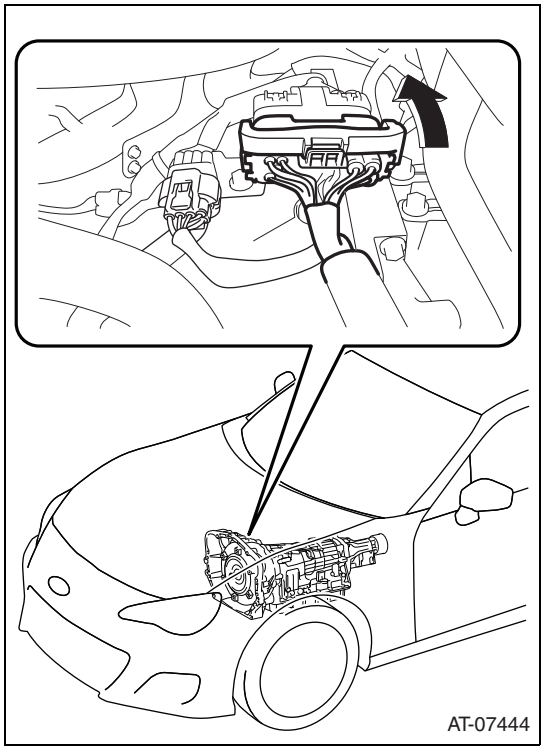

8. Manual driving test
   (1) Disconnect the harness connector (24 pins) equipped with a lever on the upper part of the transmission.
   (2) Check that gear shift conforming to each position occurs during driving.

Criteria

Select lever position	Gear position
P position	P
R position	R
D position	4th

   (3) Clear diagnostic codes after the manual driving test. (Refer to AT - 17)

9. Check of solenoid operation
   (1) SSM4 - active test
      (a)Turn the ignition switch to OFF.
      (b)Connect the SSM4 to data link connector.
      (c)Turn the ignition switch to ON with the engine stopped.
      (d)Display the [Active Test] screen according to the screen.
      (e)Perform the following active tests.

SSM4 screen: [Select Function] →[Active Test]

Item name	Description	Restriction
[Activate the Solenoid(S1)]	Turning ON ←→OFF of transmission 3 way solenoid ASSY (S1) is possible.	• Vehicle speed: 0 km/h {0 MPH} • P or N position • Engine speed: 0 r/min
[Activate the Solenoid(S2)]	Turning ON ←→OFF of transmission 3 way solenoid ASSY (S2) is possible.	• Vehicle speed: 0 km/h {0 MPH} • P or N position • Engine speed: 0 r/min
[Activate the Solenoid(S3)]	Turning ON ←→OFF of transmission 3 way solenoid ASSY (S3) is possible.	• Vehicle speed: 0 km/h {0 MPH} • P or N position • Engine speed: 0 r/min
[Activate the Solenoid(S4)]	Turning ON ←→OFF of transmission 3 way solenoid ASSY (S4) is possible.	• Vehicle speed: 0 km/h {0 MPH} • P or N position • Engine speed: 0 r/min
[Activate the Solenoid(SL1)]	MIN current ←→MAX current of clutch control solenoid No. 1 (SL1) is possible.	• Vehicle speed: 0 km/h {0 MPH} • P or N position • Engine speed: 0 r/min
[Activate the Solenoid(SL2)]	MIN current ←→MAX current of clutch control solenoid No. 1 (SL2) is possible.	• Vehicle speed: 0 km/h {0 MPH} • P or N position • Engine speed: 0 r/min
[Activate the Solenoid(SLU)]	MIN current ←→MAX current of lock-up control solenoid (SLU) is possible.	• Vehicle speed: 0 km/h {0 MPH} • P or N position • Engine speed: 0 r/min
[Activate the Solenoid(SR)]	Turning ON ←→OFF of transmission 3 way solenoid ASSY (SR) is possible.	• Vehicle speed: 0 km/h {0 MPH} • P or N position • Engine speed: 0 r/min
[Activate the Solenoid(SLT)]	MIN current ←→MAX current of line pressure control solenoid ASSY (SLT) is possible. (MAX current →duty ratio 100% (line pressure at idling)) (MIN current →duty ratio 0% (line pressure at stall))	• Vehicle speed 0 km/h {0 MPH} • P or N position • Engine speed: 0 r/min

NOTE:

Solenoid condition at shifting

Symbol	Operating condition
0	Continuity status (ON)
×	Non-continuity status (OFF)

At normal condition

Select lever position	Gear position	Transmission 3 way solenoid ASSY (S1)	Transmission 3 way solenoid ASSY (S2)	Transmission 3 way solenoid ASSY (S3)	Transmission 3 way solenoid ASSY (S4)	Transmission 3 way solenoid ASSY (SR)	Clutch control solenoid No.1 (SL1)	Clutch control solenoid No.1 (SL2)
D position	1st	×	0	0	×	0	×	0
	2nd	0	0	0	0	0	×	×
	3rd	0	×	0	×	0	×	×
	4th	0	×	×	×	0	×	0
	5th	0	×	×	0	×	0	×
	6th	0	0	×	0	×	0	×

AT

Parts location

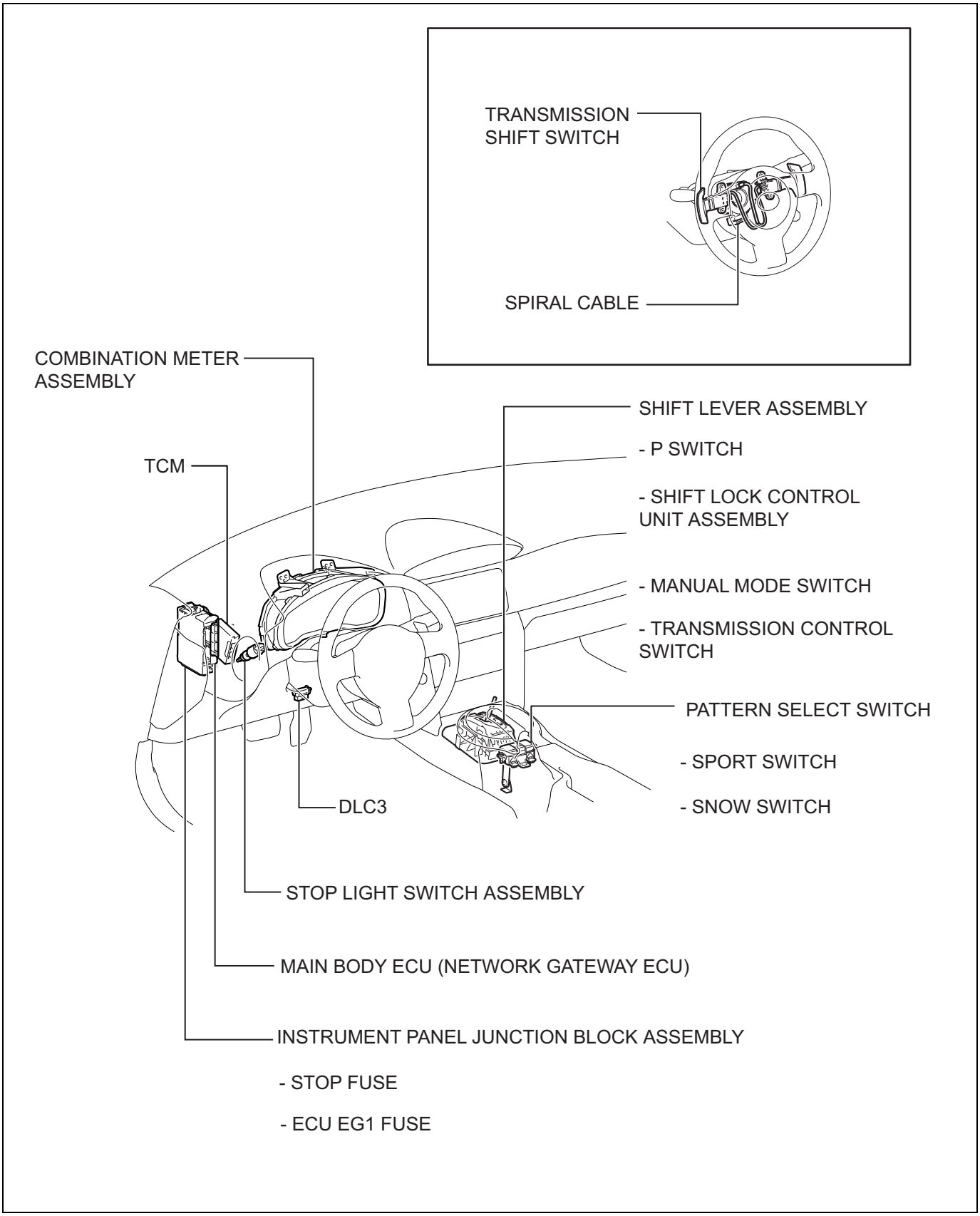

AT

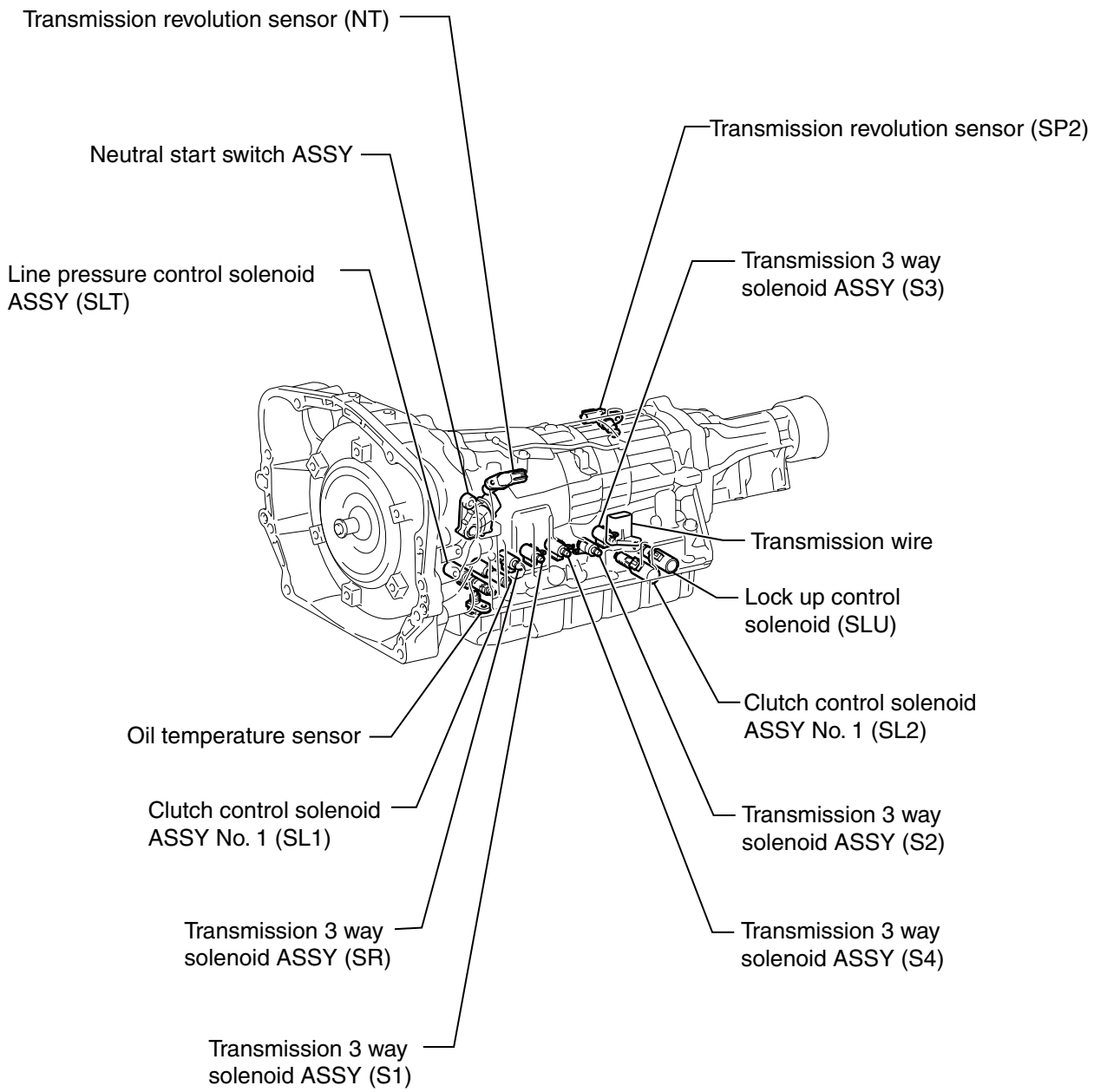

H

AT

List of diagnostic codes

Diagnostic codes	Diagnostic items	Light on	Code record	Reference pages
B1016	[shift lock circuit Failure]	0	0	AT - 37
P0601	[Internal Control Module Memory Check Sum Error]	0	0	AT - 39
P062F	[Failure EEPROM]	0	0	AT - 40
P0707	[Transmission Range Sensor "A" Circuit Low]	0	0	AT - 41
P0708	[Transmission Range Sensor "A" Circuit High]	0	0	AT - 41
P0711	[Transmission Fluid Temperature Sensor "A" Circuit Range/Performance]	0	0	AT - 45

Diagnostic codes	Diagnostic items	Light on	Code record	Reference pages
P0712	[Transmission Fluid Temperature Sensor "A" Circuit Low]	0	0	AT - 50
P0713	[Transmission Fluid Temperature Sensor "A" Circuit High]	0	0	AT - 50
P0716	[Input/Turbine Shaft Speed Sensor "A" Circuit Range/ Performance]	0	0	AT - 53
P0717	[Input/Turbine Speed Sensor "A" Circuit No Signal]	0	0	AT - 57
P0721	[Output Shaft Speed Sensor Circuit Range/Perfor- mance]	0	0	AT - 60
P0722	[Output Speed Sensor Circuit No Signal]	0	0	AT - 64
P0729	[Gear 6 Incorrect Ratio]	0	0	AT - 67
P0751	[Shift Solenoid "A" Performance/Stuck Off]	0	0	AT - 72
P0752	[Shift Solenoid "A" Stuck On]	0	0	AT - 72
P0756	[Shift Solenoid "B" Performance/Stuck Off]	0	0	AT - 78
P0757	[Shift Solenoid "B" Stuck On]	0	0	AT - 78
P0761	[Shift Solenoid "C" Performance/Stuck Off]	0	0	AT - 84
P0762	[Shift Solenoid "C" Stuck On]	0	0	AT - 84
P0766	[Shift Solenoid "D" Performance/Stuck Off]	0	0	AT - 92
P0767	[Shift Solenoid "D" Stuck On]	0	0	AT - 92
P0776	[Pressure Control Solenoid "B" Performance/Stuck Off]	0	0	AT - 92
P0781	[1-2 Shift]	0	0	AT - 84
P0882	[TCM Power Input Signal Low]	×	0	AT - 99
P0894	[Transmission Component Slipping]	0	0	AT - 127
P0961	[Pressure Control Solenoid "A" Control Circuit Range/ Performance]	0	0	AT - 101
P0962	[Pressure Control Solenoid "A" Control Circuit Low]	0	0	AT - 101
P0963	[Pressure Control Solenoid "A" Control Circuit High]	0	0	AT - 101
P0965	[Pressure Control Solenoid "B" Control Circuit Range/ Performance]	0	0	AT - 105
P0966	[Pressure Control Solenoid "B" Control Circuit Low]	0	0	AT - 105
P0967	[Pressure Control Solenoid "B" Control Circuit High]	0	0	AT - 105
P0973	[Shift Solenoid "A" Control Circuit Low]	0	0	AT - 109
P0974	[Shift Solenoid "A" Control Circuit High]	0	0	AT - 109
P0976	[Shift Solenoid "B" Control Circuit Low]	0	0	AT - 112
P0977	[Shift Solenoid "B" Control Circuit High]	0	0	AT - 112
P0979	[Shift Solenoid "C" Control Circuit Low]	0	0	AT - 115
P0980	[Shift Solenoid "C" Control Circuit High]	0	0	AT - 115
P0982	[Shift Solenoid "D" Control Circuit Low]	0	0	AT - 118
P0983	[Shift Solenoid "D" Control Circuit High]	0	0	AT - 118
P0985	[Shift Solenoid "E" Control Circuit Low]	0	0	AT - 121
P0986	[Shift Solenoid "E" Control Circuit High]	0	0	AT - 121
P160A	[Random Access Memory (RAM) Error]	0	0	AT - 124
P1817	[Manual switch system (Low)]	×	0	AT - 125
P2714	[Pressure Control Solenoid "D" Performance/Stuck Off]	0	0	AT - 127
P2719	[Pressure Control Solenoid "D" Control Circuit Range/ Performance]	0	0	AT - 137
P2720	[Pressure Control Solenoid "D" Control Circuit Low]	0	0	AT - 137
P2721	[Pressure Control Solenoid "D" Control Circuit High]	0	0	AT - 137
P2757	[Torque Converter Clutch Pressure Control Solenoid Control Circuit Performance/Stuck Off]	0	0	AT - 140
P2758	[Torque Converter Clutch Pressure Control Solenoid Control Circuit Stuck On]	0	0	AT - 140
P2762	[Torque Converter Clutch Pressure Control Solenoid Control Circuit Range/Performance]	0	0	AT - 145
P2763	[Torque Converter Clutch Pressure Control Solenoid Control Circuit High]	0	0	AT - 145

Diagnostic codes	Diagnostic items	Light on	Code record	Reference pages
P2764	[Torque Converter Clutch Pressure Control Solenoid Control Circuit Low]	0	0	AT - 145
U0073	[Control Module Communication Bus "A" Off]	0	0	AT - 149
U0100	[Lost Communication With ECM/PCM "A"]	0	0	AT - 151
U0122	[Lost Communication With Vehicle Dynamics Control Module]	0	0	AT - 151
U0140	[Lost Communication With Body Control Module]	×	0	AT - 151
U0155	[Lost Communication With Instrument Panel Cluster (IPC) Control Module]	×	0	AT - 151
U0401	[Invalid Data Received From ECM/PCM "A"]	0	0	AT - 149
U0416	[Invalid Data Received From Vehicle Dynamics Control Module]	0	0	AT - 149
U0422	[Invalid Data Received From Body Control Module]	×	0	AT - 149
U0423	[Invalid Data Received From Instrument Panel Cluster Control Module]	×	0	AT - 149

Symptom table

Symptoms	Inspection items	Reference pages
Does not up-shift (from 1st to 2nd).	Transmission 3 way solenoid ASSY (S1)	AT - 109
	Transmission control computer	IN - 36
Does not up-shift (from 2nd to 3rd).	Transmission 3 way solenoid ASSY (S2)	AT - 112
	Transmission control computer	IN - 36
Does not up-shift (from 3rd to 4th).	Transmission 3 way solenoid ASSY (S3)	AT - 115
	EFI water temperature system	ES - 696
	Transmission control computer	IN - 36
Does not up-shift (from 4th to 5th).	Clutch control solenoid No.1 (SL1)	AT - 101
	Clutch control solenoid No.1 (SL2)	AT - 105
	Transmission 3 way solenoid ASSY (S4)	AT - 118
	Transmission 3 way solenoid ASSY (SR)	AT - 121
	EFI water temperature system	ES - 696
	Transmission control computer	IN - 36
Does not up-shift (from 5th to 6th).	Transmission 3 way solenoid ASSY (S2)	AT - 112
	Transmission control switch	AT - 41
	EFI water temperature system	ES - 696
	Transmission control computer	IN - 36
Does not down-shift (from 6th to 5th).	Transmission 3 way solenoid ASSY (S2)	AT - 112
	Transmission control switch	AT - 41
	Transmission control computer	IN - 36
Does not down-shift (from 5th to 4th).	Clutch control solenoid No.1 (SL1)	AT - 101
	Clutch control solenoid No.1 (SL2)	AT - 105
	Transmission 3 way solenoid ASSY (S4)	AT - 118
	Transmission 3 way solenoid ASSY (SR)	AT - 121
	Transmission control computer	IN - 36
Does not down-shift (from 4th to 3rd).	Transmission 3 way solenoid ASSY (S3)	AT - 115
	Transmission control computer	IN - 36
Does not down-shift (from 3rd to 2nd).	Transmission 3 way solenoid ASSY (S2)	AT - 112
	Transmission control computer	IN - 36
Does not down-shift (from 2nd to 1st).	Transmission 3 way solenoid ASSY (S1)	AT - 109
	Transmission control computer	IN - 36
Does not turn lock-up ON or OFF.	Lock-up control solenoid (SLU)	AT - 145
	Transmission revolution sensor (NT) system	AT - 57
	Stop light switch ASSY system	LE - 80
	EFI water temperature system	ES - 696
	Transmission control computer	IN - 36

Symptoms	Inspection items	Reference pages
Shift point is faulty.	Throttle position sensor system	ES - 12
	Line pressure control solenoid ASSY (SLT)	AT - 137
	Transmission revolution sensor (NT) system	AT - 57
	Transmission revolution sensor (SP2) system	AT - 64
	Pattern select (SPORT) switch system	AT - 157
	Neutral start switch ASSY system	AT - 41
	Oil temperature sensor system	AT - 50
	Transmission control computer	IN - 36
Does not change the range with “+”“-” shifts at M position.	Transmission control switch	AT - 41
	Transmission control computer	IN - 36
Does not change the range with the paddle shifter (transmission shift switch).	Paddle shifter	AT - 213
	Transmission control computer	IN - 36
Up-shifts to 6th when the engine is cold.	EFI water temperature system	ES - 696
	Transmission control computer	IN - 36
Excessive shift shock (N→D)	Line pressure control solenoid ASSY (SLT)	AT - 137
	Transmission control computer	IN - 36
Excessive shift shock (when any gear is shifted).	Throttle position sensor system	ES - 12
	Clutch control solenoid No.1 (SL1)	AT - 101
	Clutch control solenoid No.1 (SL2)	AT - 105
	Lock-up control solenoid (SLU)	AT - 145
	Line pressure control solenoid ASSY (SLT)	AT - 137
	Transmission revolution sensor (NT) system	AT - 57
	Transmission control computer	IN - 36
Excessive shock at lock-up	Lock-up control solenoid (SLU)	AT - 145
	Transmission revolution sensor (NT) system	AT - 57
	Transmission revolution sensor (SP2) system	AT - 64
	Transmission control computer	IN - 36
Poor acceleration	Line pressure control solenoid ASSY (SLT)	AT - 137
	Pattern select (SNOW) switch system	AT - 157
	Transmission control computer	IN - 36
Shifting requires a long period of time when up-shifting.	Transmission 3 way solenoid ASSY (SR)	AT - 121
	Line pressure control solenoid ASSY (SLT)	AT - 137
Shifting requires a long period of time when down-shifting.	Transmission 3 way solenoid ASSY (SR)	AT - 121
	Line pressure control solenoid ASSY (SLT)	AT - 137
Does not switch to the SNOW mode.	Line pressure control solenoid ASSY (SLT)	AT - 137
	Pattern select (SNOW) switch system	AT - 157
	Transmission control computer	IN - 36
Does not switch to the SPORT mode.	Line pressure control solenoid ASSY (SLT)	AT - 137
	Pattern select (SPORT) switch system	AT - 157
	Transmission control computer	IN - 36
AT slippage during 5th ←→6th shifting.	Transmission 3 way solenoid ASSY (SR)	AT - 121
	Line pressure control solenoid ASSY (SLT)	AT - 137
Shift lock is not released.	IG circuit	PD - 14
	Main body ECM (multiplex network computer)	IN - 36
	Shift lock solenoid	AT - 37
	P switch	AT - 211
	Stop light switch	LE - 80
	Vehicle wiring harness and connector	IN - 36

AT

Description of functions

1. Diagnosis function
   (1) The check engine warning light illuminates when a malfunction occurs in the AT system.
   CAUTION:
   The light goes off if the malfunction item returns to the normal state. However, diagnostic codes are recorded.

(2) Diagnostic results of malfunction occurrence are recorded in the transmission control computer.
CAUTION:
Do not disconnect the MAIN fuse, AT+B fuse, and battery terminal until the check finishes.

2. Failsafe function
(1) When there is an open or short circuit in any solenoid valve system, only the mechanical hydraulic circuit operates and the manual shift control is initiated. (When open and short circuits occur, the transmission control computer stops continuity of all solenoid valves.)

How to troubleshoot

1	Bring in the car

Next

2	Interview and phenomenon check (Refer to AT - 17)

Next

3	Battery voltage check

(1) Check the battery voltage.
Voltage: 11 to 14 V

NG → Battery charge or replacement

OK

4	CAN communication system communication function check

NOTE:
Refer to NW - 30
(1) Check CAN communication system.
Result

Result	Go to
Functioning properly	A
Not functioning properly	B

B → To CAN communication section NW - 30

A

5	DTC check

NOTE:
Refer to AT - 17
(1) Check diagnostic codes and freeze frame data.
(a) Record diagnostic codes and freeze frame data.
(2) Clear diagnostic codes and freeze frame data.
(3) Recheck DTC.

(a) Reproduce the trouble phenomenon based on the recorded diagnostic codes and freeze frame data and check that the diagnostic codes are output again.

Result

Result	Go to
The diagnostic codes are normal and the trouble phenomenon can be checked and reproduced.	A
Abnormality codes are output.	B
The diagnostic codes are normal and the trouble phenomenon cannot be checked and reproduced.	C

B → Refer to list of diagnostic codesAT - 11to troubleshoot each code and jump to step 9.

C → To trouble simulation IN - 32.

A

6	Symptom table (Refer to AT - 13)

Result

Result	Go to
Not applicable to the symptom table.	A
Applicable to the symptom table.	B

B → Perform troubleshooting for relevant symptom and go to step 8.

A

7	Troubleshooting by the following methods based on trouble phenomenon

(1) Data monitor (Refer to AT - 29)
(2) Active test (Refer to AT - 29)
(3) Manual driving test (refer to AT - 7)
(4) ECM terminal arrangement (Refer to AT - 24)

Next

8	Adjustment, repair, or replacement

Next

9	Confirmation test

Next

Complete

AT

Check list for interview

AT Control System Check Sheet

Inspector: Inspection date: /

Name		Registration No.	
		First registration Year Month	Year Month
Vehicle model		Frame No.	
Year/month/date of vehicle bring-in	Month Date (Day)	Odometer reading	

Date when trouble occurred	Month Date (Engine: ☐ Cold ☐ Warm)
Frequency of occurrence	☐ Continuous ☐ Intermittent (times/day)

Trouble symptom	☐ Cannot drive (☐ All ranges ☐ Specific range [range])
	☐ No up-shift ☐ 1st → 2nd ☐ 2st → 3rd ☐ 3rd → 4th ☐ 4th → 5th ☐ 5th → 6th
	☐ No down-shift ☐ 6th → 5th ☐ 5th → 4th ☐ 4th → 3rd ☐ 3rd → 2nd ☐ 2nd → 1st
	☐ Lock-up failure
	☐ Shift point failure
	☐ Excessive shift shock (☐ N → D/R ☐ Lock-up ☐ Shifting)
	☐ Poor acceleration (slippage)
	☐ Noise and vibration
	☐ Others

Condition of indicator light	☐ Lit ( ) ☐ Does not lit

DTC check	1st	☐ Normal code	☐ Abnormal code
	2nd	☐ Normal code	☐ Abnormal code
* If abnormal code appears at 1st time, record freeze frame data.			
Freeze frame data			

AT-07691

AT

Checking / clearing diagnostic codes

1. DTC check (read by SSM4)
   (1) Use SSM4 to display the [Transmission Control System] screen according to the screen display and select [DTC].

(2) Check the diagnostic codes.

2. Freeze frame data
   (1) Use SSM4 to select [FFD] from the [Transmission Control System] / [DTC] screen.
   NOTE:
   - The transmission condition (TCM data) when a diagnostic code is detected and 2 seconds before a diagnostic code is detected can be checked at intervals of 0.5 seconds. (Refer to IN - 27)
   - Check the consistency of the interviewed trouble phenomenon and the list of diagnostic codes.
   - After repair, perform a confirmation test by referring to the driving condition checked above.

3. Clearing diagnostic code records (Cleared by the SSM4)
   (1) Use SSM4 to display the [Transmission Control System] / [DTC] screen according to the screen display and select [Clear Memory].
   (2) Select [Yes] displayed on the screen to clear the data.
   CAUTION:
   Diagnostic codes and freeze frame data are cleared at the same time.

Freeze frame data

1. Freeze data table
   (1) Use SSM4 to select [FFD] from the [Transmission Control System] / [DTC] screen.
   NOTE:
   - The transmission condition (TCM data) when a diagnostic code is detected and 2 seconds before a diagnostic code is detected can be checked at intervals of 0.5 seconds. (Refer to IN - 27)
   - Check the consistency of the interviewed trouble phenomenon and the list of diagnostic codes.
   - After repair, perform a confirmation test by referring to the driving condition checked above.

Item name	
[Coolant Temp.]	[Shift SW Status History (P Range)]
[Engine Speed]	[Shift SW Status History (R Range)]
[Vehicle Speed]	[Shift SW Status History (N Range)]
[Time Since Engine Start]	[Shift SW Status History (D Range)]
[Number of warm-ups]	[Manual SW History]
[Meter since DTC cleared]	[Up SW History]
[Time since DTC cleared]	[Down SW History]
[Control module voltage]	[Snow Mode History]
[DTC that caused required Freeze Frame data storage]	[Snow SW History]
[Engine Speed]	[Sport SW History]
[Coolant Temp.]	[A/C Switch History]
[Accel. Opening Angle]	[TC Terminal]
[Throttle Opening Angle]	[Turbine Revolution Speed]
[Stop Light Switch]	[AT Speed]
[Shift SW Status (P Range)]	[ATF Temp.]
[Shift SW Status (R Range)]	[Shift Indicator Lamp UP Shift]
[Shift SW Status (N Range)]	[Shift Indicator Lamp Down Shift]
[Shift SW Status (D Range)]	[Sport Mode]
[Manual SW]	[Control the Shift Position]
[Up SW]	[Lock up status]
[Down SW]	[SLT Solenoid Status]
[Snow Mode]	[Activate the Lock Up (SLT)]
[Snow SW]	[# Codes(Include History)]
[Sport SW]	[Number Of ALL DTCs]
[A/C Switch]	[Trip Count]
[Stop Light Switch History]	[Count]
	[Time Count]

Inspection for problems that do not normally occur

1. Check mode (wiring harness and connector instantaneous interruption check)
   NOTE:
   When a defective system is found by diagnostic codes output in DTC (check mode) check, narrow down defective part by the following procedure.
   (1) Use SSM4 to display the [Transmission Control System/Work Support] screen according to the screen display.
   (2) Select [Test Mode Change] to switch to the check mode.
   (3) After reading diagnostic codes in the check mode, clear the diagnostic codes memory.
   (4) Select the check mode and start the engine.
   (5) With the vehicle idling, swing the wiring harness and connector of the defective system which is output in DTC (check mode) check.
   (6) When the check engine warning light is illuminated, the wiring harness or connector at the point may have poor contact.
   (7) After check, be sure to select [Test Mode Change] to switch to the normal mode.

Work support

1. AT learning values initialization
   CAUTION:
   - Execute [Clear the AT learned information] when any of transmission ASSY, valve body ASSY, transmission wire, engine ASSY, transmission control computer is replaced.
   - Wait for 1 minute or more after connecting the battery terminal when performing AT learning value initialization.

   NOTE:
   The learning value is not initialized (cleared) only by removing the ground terminal of the battery.
   (1) Check that the shift is in P position and connect SSM4 to DLC3 to turn IG and the power of SSM4 ON.
      CAUTION:
      Do not start engine.
   (2) Execute AT learning value initialization.
      (a) Select [Transmission Control System/Work Support] →[Clear the AT learned information] from the main menu according to SSM4 screen display and execute them to initialize AT learning value.

Circuit figure

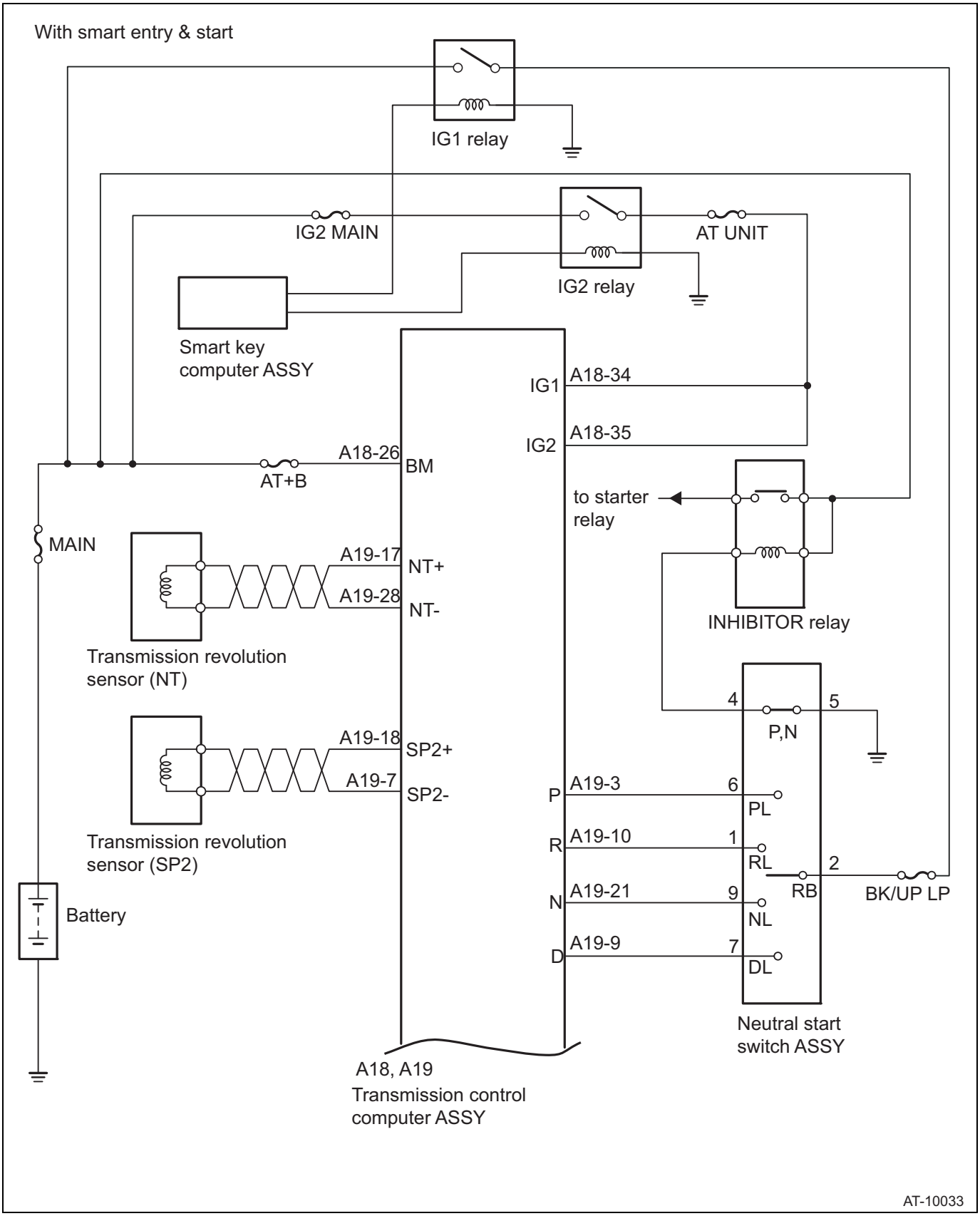

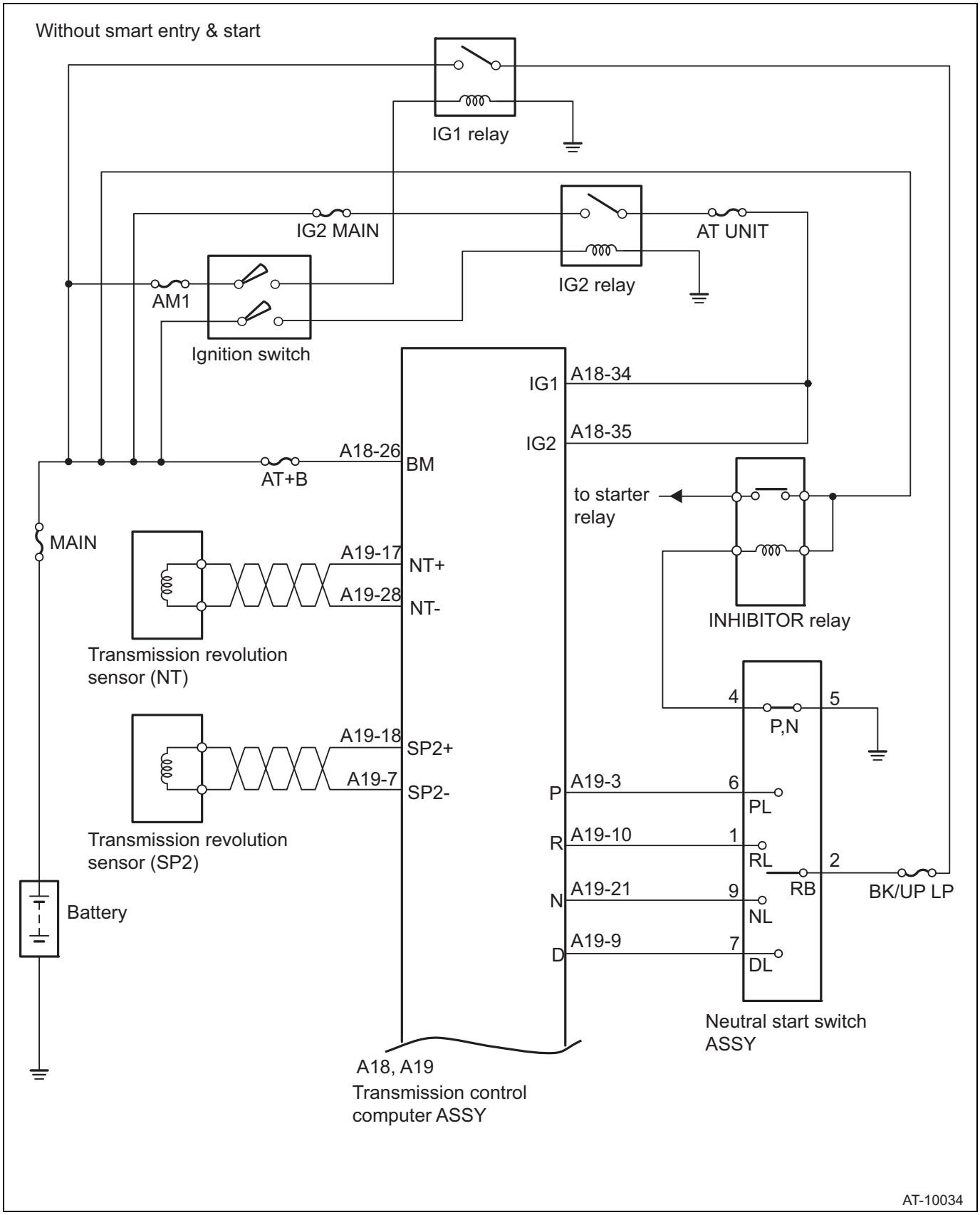
Without smart entry & start
IG1 relay
IG2 MAIN
AT UNIT
IG2 relay
AM1
Ignition switch
IG1
A18-34
IG2
A18-35
A18-26
BM
AT+B
to starter relay
MAIN
A19-17
NT+
A19-28
NT-
INHIBITOR relay
Transmission revolution sensor (NT)
4
5
P,N
A19-18
SP2+
A19-7
SP2-
P
A19-3
6
PL
R
A19-10
1
RL
2
RB
BK/UP LP
Transmission revolution sensor (SP2)
Battery
N
A19-21
9
NL
D
A19-9
7
DL
Neutral start switch ASSY
A18, A19
Transmission control computer ASSY
AT-10034

AT

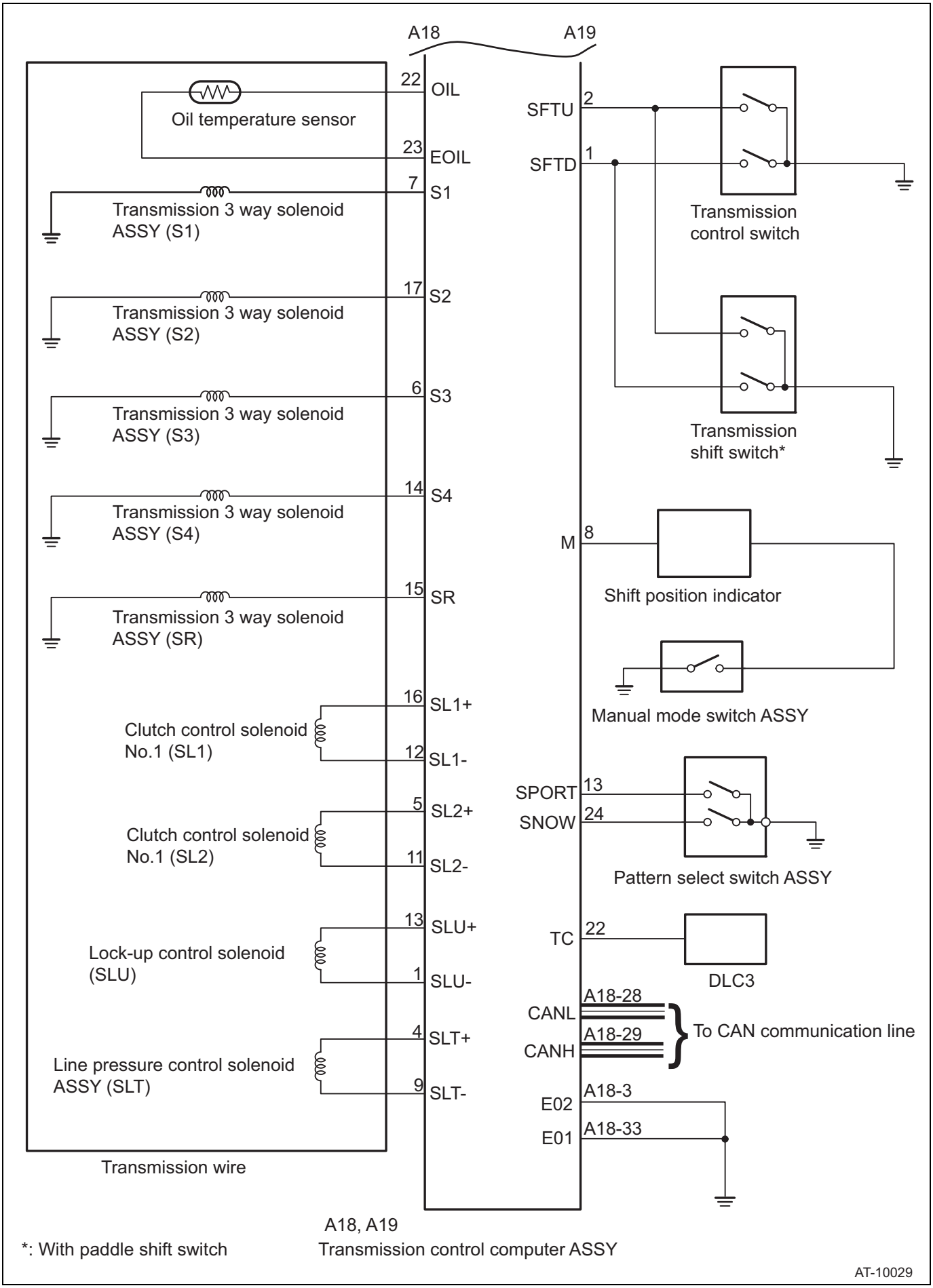
A18
A19
22 OIL
Oil temperature sensor
23 EOIL
7 S1
Transmission 3 way solenoid ASSY (S1)
17 S2
Transmission 3 way solenoid ASSY (S2)
6 S3
Transmission 3 way solenoid ASSY (S3)
14 S4
Transmission 3 way solenoid ASSY (S4)
15 SR
Transmission 3 way solenoid ASSY (SR)
16 SL1+
Clutch control solenoid No.1 (SL1)
12 SL1-
5 SL2+
Clutch control solenoid No.1 (SL2)
11 SL2-
13 SLU+
Lock-up control solenoid (SLU)
1 SLU-
4 SLT+
Line pressure control solenoid ASSY (SLT)
9 SLT-
Transmission wire
SFTU 2
SFTD 1
Transmission control switch
Transmission shift switch*
M 8
Shift position indicator
Manual mode switch ASSY
SPORT 13
SNOW 24
Pattern select switch ASSY
TC 22
DLC3
CANL A18-28
CANH A18-29
To CAN communication line
E02 A18-3
E01 A18-33
A18, A19
Transmission control computer ASSY
*: With paddle shift switch
AT-10029

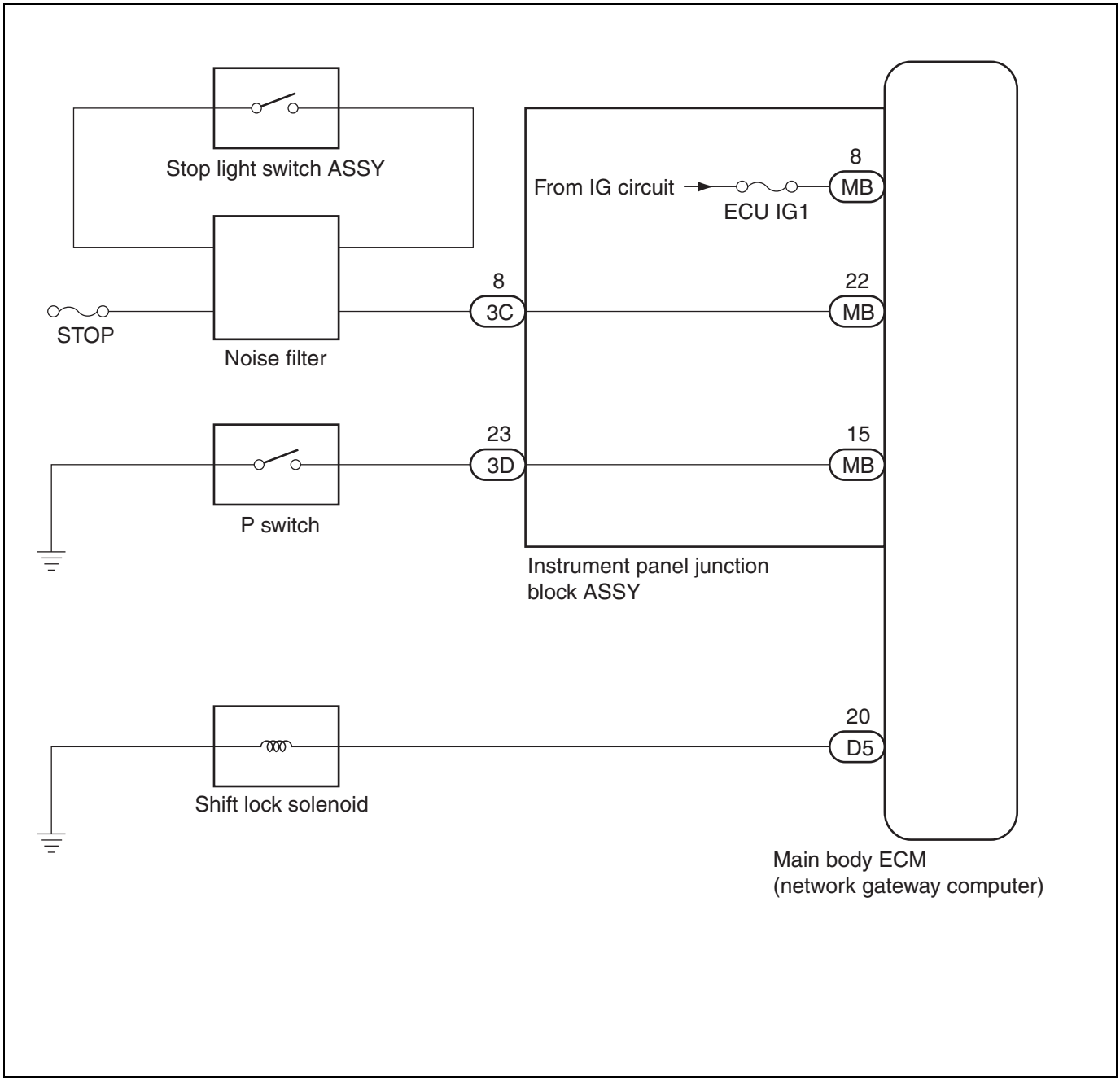
Stop light switch ASSY
From IG circuit
ECU IG1
8
MB
STOP
8
3C
22
MB
Noise filter
23
3D
15
MB
P switch
Instrument panel junction
block ASSY
20
D5
Shift lock solenoid
Main body ECM
(network gateway computer)

ECM terminal arrangement

1. Transmission control computer

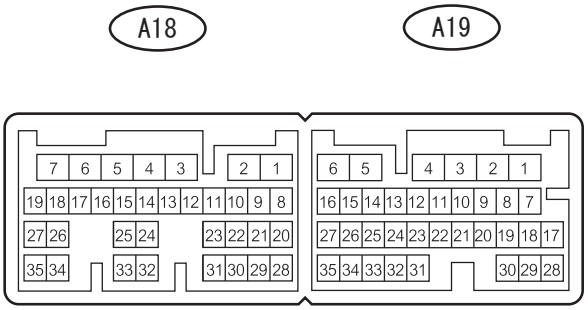

H

NOTE:

Check the voltage and continuity between terminals.

Terminal No. (Terminal symbol)	Input/output	Item	Measuring condition	Criteria
A18-34 (IG1) ←→A18-33 (E01)	Input	Voltage	IG ON	11 to 14V
A18-35 (IG2) ←→A18-33 (E01)	Input	Voltage	IG ON	11 to 14V
A18-26 (BM) ←→A18-33 (E01)	Input	Voltage	Always	11 to 14V
A19-18 (SP2+) ←→A19-7 (SP2-)	Input	Waveform	When vehicle speed is approx. 20 km/h {12 MPH}.	Waveform 1
A19-17 (NT+) ←→A19-28 (NT-)	Input	Waveform	When engine is idling (select lever in P or N position).	Waveform 2
A19-3 (P) ←→A18-33 (E01)	Input	Voltage	• IG ON • Select lever in P position	11 to 14V
	Input	Voltage	• IG ON • Select lever in any other than P position	Less than 1 V
A19-10 (R) ←→A18-33 (E01)	Input	Voltage	• IG ON • Select lever in R position	11 to 14V
	Input	Voltage	• IG ON • Select lever in any other than R position	Less than 1 V
A19-21 (N) ←→A18-33 (E01)	Input	Voltage	• IG ON • Select lever in N position	11 to 14V
	Input	Voltage	• IG ON • Select lever in any other than N position	Less than 1 V
A19-9 (D) ←→A18-33 (E01)	Input	Voltage	• IG ON • Select lever in D position	11 to 14V
	Input	Voltage	• IG ON • Select lever in any other than D position	Less than 1 V
A19-8 (M) ←→A18-33 (E01)	Input	Voltage	• IG ON • Manual mode switch ON	11 to 14V
	Input	Voltage	• IG ON • Manual mode switch OFF	Less than 1 V
A19-2 (SFTU) ←→A18-33 (E01)	Input	Voltage	• IG ON • Shift manual mode switch ON →“+”	Less than 1V
A19-1 (SFTD) ←→A18-33 (E01)	Input	Voltage	• IG ON • Shift manual mode switch ON →“-”	Less than 1V
A18-22 (OIL) ←→A18-23 (EOIL)	Input	Voltage	Transmission oil temperature 115°C or more	Less than 1 V
A18-16 (SL1+) ←→A18-12 (SL1-)	Output	Waveform	5th or 6th gear	Waveform 3
A18-5 (SL2+) ←→A18-11 (SL2-)	Output	Waveform	While engine idling	Waveform 4
A18-4 (SLT+) ←→A18-9 (SLT-)	Output	Waveform	While engine idling	Waveform 5

Terminal No. (Terminal symbol)	Input/output	Item	Measuring condition	Criteria
A18-13 (SLU+) ←→A18-1 (SLU-)	Output	Waveform	In M position 2nd to 6th gear (when lock-up is operating)	Waveform 6
A18-7 (S1) ←→A18-33 (E01)	Output	Voltage	1st gear	Less than 1 V
	Output	Voltage	Any other than 1st gear	11 to 14V
A18-17 (S2) ←→A18-33 (E01)	Output	Voltage	1st, 2nd or 6th gear	11 to 14V
	Output	Voltage	3rd, 4th or 5th gear	Less than 1 V
A18-6 (S3) ←→A18-33 (E01)	Output	Voltage	1st, 2nd or 3rd gear	11 to 14V
	Output	Voltage	4th, 5th or 6th gear	Less than 1 V
A18-14 (S4) ←→A18-33 (E01)	Output	Voltage	5th or 6th gear	11 to 14V
	Output	Voltage	1st, 2nd, 3rd or 4th gear	Less than 1 V
A18-15 (SR) ←→A18-33 (E01)	Output	Voltage	1st, 2nd, 3rd or 4th gear	11 to 14V
	Output	Voltage	5th or 6th gear	Less than 1 V
A18-29 (CANH) ←→A18-33 (E01)	-	Waveform	• IG ON • Engine stop	Waveform 7
A18-28 (CANL) ←→A18-33 (E01)	-	Waveform	• IG ON • Engine stop	Waveform 8
A18-33 (E01) ←→chassis ground	-	Resistance	Always	Less than 1 Ω
A18-3 (E02) ←→chassis ground	-	Resistance	Always	Less than 1 Ω
A19-13 (SPORT) ←→chassis ground	Input	Voltage	• IG ON • Pattern select switch "SPORT" ON	Less than 1 V
	Input	Voltage	• IG ON • Pattern select switch "SPORT" OFF	11 to 14V
A19-24 (SNOW) ←→chassis ground	Input	Voltage	• IG ON • Pattern select switch "SNOW" ON	Less than 1 V
	Input	Voltage	• IG ON • Pattern select switch "SNOW" OFF	11 to 14V

AT

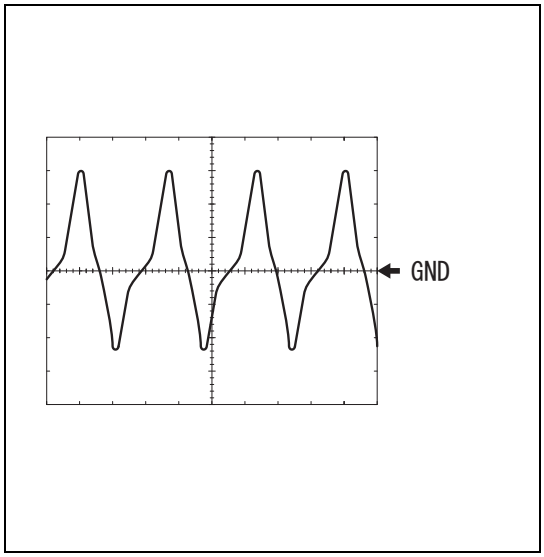

(1) Waveform 1

Item	Contents
Measuring terminal	A19-18 (SP2+) ←→A19-7 (SP2-)
Equipment setting	1 V/DIV, 2 ms/DIV
Measuring condition	When vehicle speed is approx. 20 km/h {12 MPH}.

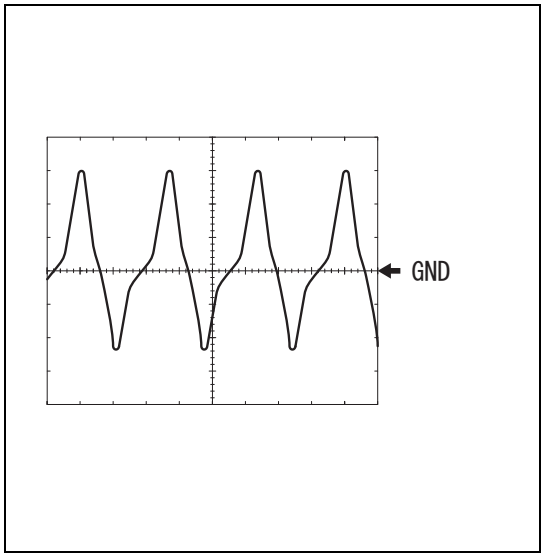

(2) Waveform 2

Item	Contents
Measuring terminal	A19-17 (NT+) ←→A19-28 (NT-)
Equipment setting	5V/DIV., 2msec./DIV.
Measuring condition	When engine is idling (select lever in P or N position).

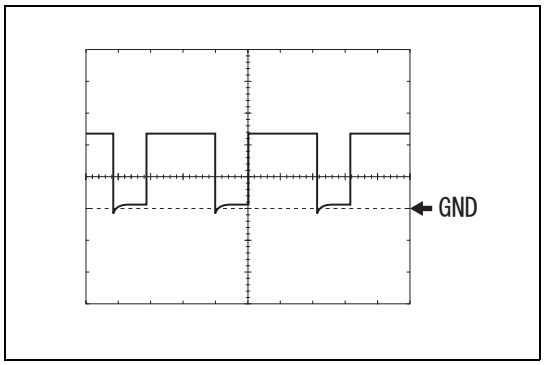

(3) Waveform 3

Item	Contents
Measuring terminal	A18-16 (SL1+) ←→A18-12 (SL1-)
Equipment setting	5V/DIV, 1 ms/DIV
Measuring condition	5th or 6th gear

AT

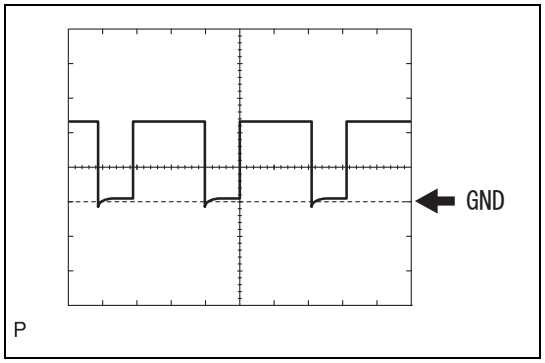

(4) Waveform 4

Item	Contents
Measuring terminal	A18-5 (SL2+) ←→A18-11 (SL2-)
Equipment setting	5V/DIV., 1msec./DIV.
Measuring condition	While engine running

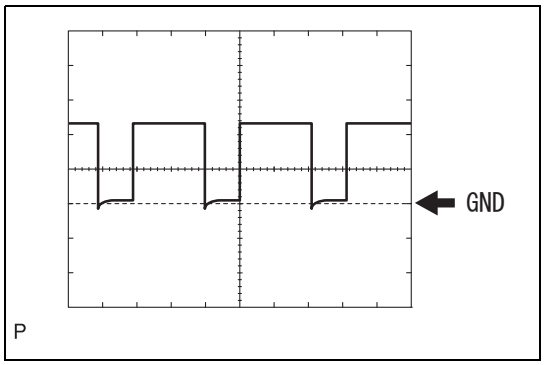

(5) Waveform 5

Item	Contents
Measuring terminal	A18-4 (SLT+) ←→A18-9 (SLT-)
Equipment setting	5V/DIV., 1msec./DIV.
Measuring condition	While engine idling

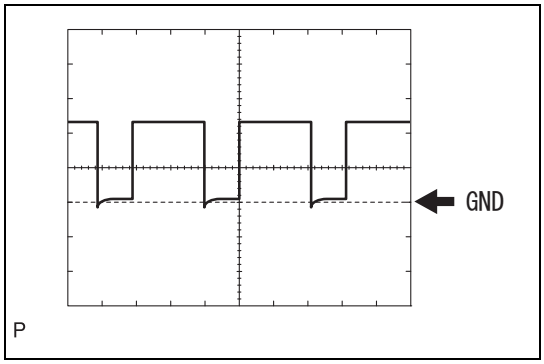

(6) Waveform 6

Item	Contents
Measuring terminal	A18-13 (SLU+) ←→A18-1 (SLU-)
Equipment setting	5V/DIV., 1msec./DIV.
Measuring condition	M position: in 2nd to 6th gear (when lock-up is operating)

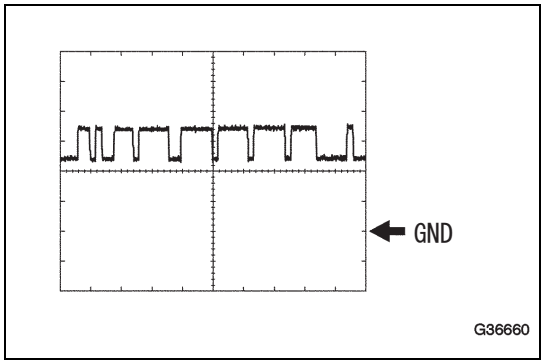

(7) Waveform 7

Item	Contents
Measuring terminal	A18-29 (CANH) ←→A18-33 (E01)
Equipment setting	1V/DIV., 10msec/DIV.
Measuring condition	Engine stop, IG ON

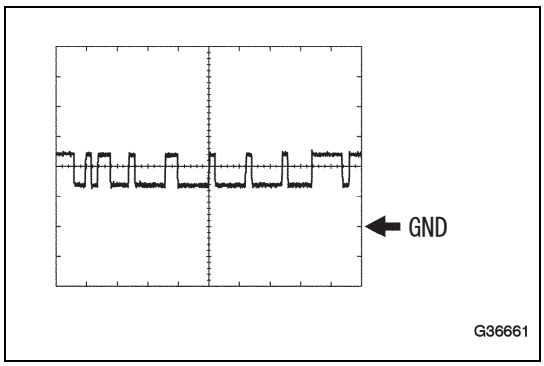

(8) Waveform 8

Item	Contents
Measuring terminal	A18-28 (CANL) ←→A18-33 (E01)
Equipment setting	1V/DIV., 10msec/DIV.
Measuring condition	Engine stop, IG ON

AT

2. Instrument panel junction block ASSY, main body ECM (multiplex network body computer)

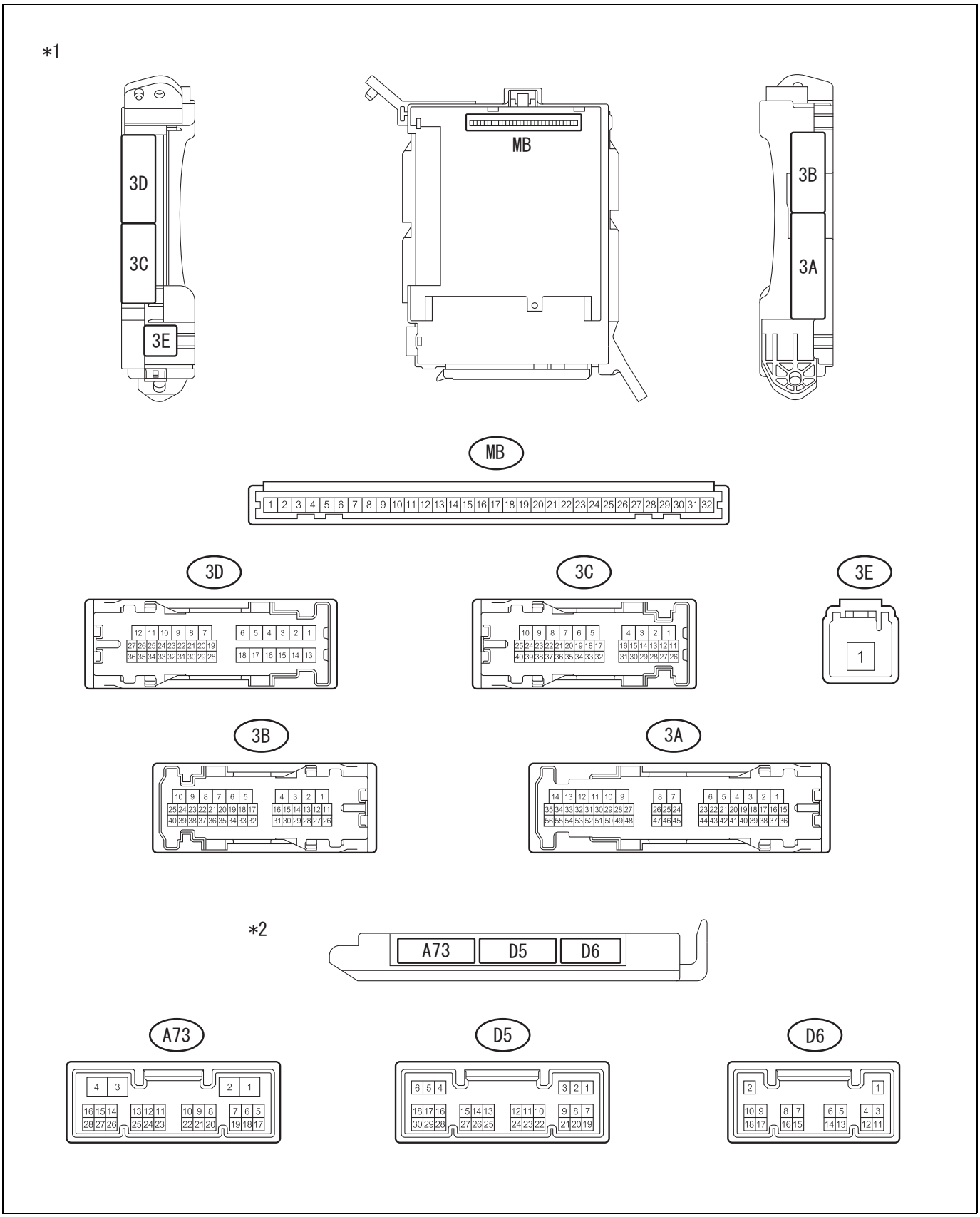

Captions in illustration

*1	Instrument panel junction block ASSY	*2	Main body ECM (multiplex network body computer)

NOTE:
Measure the voltage between the terminals.

Terminal No. (Terminal symbol)	Input/output	Item	Measuring condition	Criteria
D5-20 ←→chassis ground	Output	Voltage	• IG ON • Select lever in P position • Stop light switch ON (brake pedal depressed)	11 to 14V
			• IG ON • Select lever in P position • Stop light switch OFF (brake pedal not depressed)	Less than 1 V
3C-8 ←→chassis ground	Input	Voltage	Stop light switch ON (brake pedal depressed)	11 to 14V
			Stop light switch OFF (brake pedal not depressed)	Less than 1 V
3D-23 ←→chassis ground	Input	Voltage	Select lever in any other than P position	11 to 14V
			Select lever in P position	Less than 1 V

Data monitor / active test

1. Inspection with SSM4 (data monitor)

   CAUTION:

   Subtle phenomena such as breathing and rough idling need to be totally judged based on all items in the computer data by using a method of comparing with an equivalent vehicle after collecting data under the same condition.

   (1) On the SSM4, navigate to the [Data monitor] display, and check the computer data.

SSM4 screen: [Transmission Control System] →[Select Function] →[Data monitor]

Item name [Symbol]	Description/display range	Normal value	Remarks
[Coolant Temp.]	Indicating engine coolant temperature/ Display range: -40 to 140°C	Gradually increasing: Cold start →warmed up	When abnormal, the THW voltage may be abnormal.
		80 to 105°C: Warmed up	When abnormal, the THW voltage may be abnormal.
		215°C: When sensor is disconnected	When abnormal, the THW voltage may be abnormal.
		215°C or more: When sensor is shorted	When abnormal, the THW voltage may be abnormal.
[Engine Speed]	Indicating engine speed/ Display range: 0 to 16383.75r/min	0 r/min: When engine is stopped (IG ON)	When abnormal, there may be an NE signal malfunction.
		No significant fluctuation: When engine is running at a constant speed	When abnormal, there may be an NE signal malfunction.
[Vehicle Speed]	Indicating vehicle speed/ Display range: 0 to 255km/h {158MPH}	0 km/h {0 MPH}: When vehicle is parked	When abnormal, there may be an SPD signal malfunction.
		No significant fluctuation: When driving at a constant speed	When abnormal, there may be an SPD signal malfunction.
[Time Since Engine Start]	Indicating time elapsed after engine start (engine start →IG OFF)/ Display range: 0 to 65535sec	-	-
[Number of warm-ups]	Indicating number of warming-ups after DG is cleared/ Display range: 0 to 255 times	-	-
[Meter since DTC cleared]	Indicating travel distance after diagnostic codes cleared/ Display range: 0 to 65535km	-	-
[Time since DTC cleared]	Indicating time elapsed after diagnostic codes are cleared/ Display range: 0 to 65535min	-	-
[Control module voltage]	Indicating battery voltage/ Display range: 0 to 65.535V	11 to 14 V: During idling	When abnormal, the BATT voltage may be abnormal.
[MIL Status]	Indicating TCM side MIL illumination indication status/ Display range: OFF ←→ON	OFF →ON : Normal →malfunction	-
[Number of Diagnostic Code(s):]	Indicating trouble codes stored in TCM/ Display range: 0 to 127	-	-

AT

Item name [Symbol]	Description/display range	Normal value	Remarks
[Component monitoring(Supp)]	Indicating component monitor test/ Display range: without support ←→with support	With support	-
[Fuel system monitoring(Supp)]	Indicating fuel system monitor test/ Display range: without support ←→with support	Without support	-
[Misfire monitoring(Supp)]	Indicating misfire monitor test/ Display range: without support ←→with support	Without support	-
[EGR system(Supp)]	Indicating EGR system test/ Display range: without support ←→with support	Without support	-
[O2 Heater Diagnosis(Supp)]	Indicating O2 sensor heater test/ Display range: without support ←→with support	Without support	-
[Oxygen sensor(Supp)]	Indicating O2 sensor test/ Display range: without support ←→with support	Without support	-
[A/C system refrigerant(Supp)]	Indicating refrigerant test on air conditioner system/ Display range: without support ←→with support	Without support	-
[Secondary air system(Supp)]	Indicating secondary air system test/ Display range: without support ←→with support	Without support	-
[Evaporative purge system(Supp)]	Indicating test on evaporative emission purge control system/ Display range: without support ←→with support	Without support	-
[Heated catalyst(Supp)]	Indicating test on heat type catalyst/ Display range: without support ←→with support	Without support	-
[Catalyst Diagnosis(Supp)]	Indicating catalyst test/ Display range: without support ←→with support	Without support	-
[EGR system(Rdy)]	Indicating EGR system test/ Display range: NO ←→YES / N/A	YES / N/A	-
[O2 Heater Diagnosis(Rdy)]	Indicating O2 sensor heater test/ Display range: NO ←→YES / N/A	YES / N/A	-
[Oxygen sensor(Rdy)]	Indicating O2 sensor test/ Display range: NO ←→YES / N/A	YES / N/A	-
[A/C system refrigerant(Rdy)]	Indicating refrigerant test on air conditioner system/ Display range: NO ←→YES / N/A	YES / N/A	-
[Secondary air system(Rdy)]	Indicating secondary air system test/ Display range: NO ←→YES / N/A	YES / N/A	-
[Evaporative purge system(Rdy)]	Indicating test on evaporative emission purge control system/ Display range: NO ←→YES / N/A	YES / N/A	-
[Heated catalyst(Rdy)]	Indicating test on heat type catalyst/ Display range: NO ←→YES / N/A	YES / N/A	-
[Catalyst Diagnosis(Rdy)]	Indicating catalyst test/ Display range: NO ←→YES / N/A	YES / N/A	-
[OBD System]	Indicating OBD applicable law	EOBD / OBD2	-
[Lighted MI lamp history]	Indicating distance record from MIL illumination/ Display range: 0 to 65535km	-	-
[Component monitoring(Comp)]	Indicating component monitor test/ Display range: NO ←→YES / N/A	YES / N/A	-
[Fuel system monitoring(Comp)]	Indicating fuel system monitor test/ Display range: NO ←→YES / N/A	YES / N/A	-

AT

Item name [Symbol]	Description/display range	Normal value	Remarks
[Misfire monitoring(Comp)]	Indicating misfire monitor test/ Display range: NO ←→YES / N/A	YES / N/A	-
[Component monitoring(Enable)]	Indicating component monitor test/ Display range: NO / N/A ←→YES	YES	-
[Fuel system monitoring(Enable)]	Indicating fuel system monitor test/ Display range: NO / N/A ←→YES	NO / N/A	-
[Misfire monitoring(Enable)]	Indicating misfire monitor test/ Display range: NO / N/A ←→YES	NO / N/A	-
[EGR system(Enable)]	Indicating EGR system test/ Display range: NO / N/A ←→YES	NO / N/A	-
[O2 Heater Diagnosis(Enable)]	Indicating O2 sensor heater test/ Display range: NO / N/A ←→YES	NO / N/A	-
[Oxygen sensor(Enable)]	Indicating O2 sensor test/ Display range: NO / N/A ←→YES	NO / N/A	-
[A/C system refrigerant(Enable)]	Indicating refrigerant test on air conditioner system/ Display range: NO / N/A ←→YES	NO / N/A	-
[Secondary air system(Enable)]	Indicating secondary air system test/ Display range: NO / N/A ←→YES	NO / N/A	-
[Evaporative purge system(Enable)]	Indicating test on evaporative emission purge control system/ Display range: NO / N/A ←→YES	NO / N/A	-
[Heated catalyst(Enable)]	Indicating test on heat type catalyst/ Display range: NO / N/A ←→YES	NO / N/A	-
[Catalyst Diagnosis(Enable)]	Indicating catalyst test/ Display range: NO / N/A ←→YES	NO / N/A	-
[EGR system(Comp)]	Indicating EGR system test/ Display range: NO ←→YES / N/A	YES / N/A	-
[O2 Heater Diagnosis(Comp)]	Indicating O2 sensor heater test/ Display range: NO ←→YES / N/A	YES / N/A	-
[Oxygen sensor(Comp)]	Indicating O2 sensor test/ Display range: NO ←→YES / N/A	YES / N/A	-
[A/C system refrigerant(Comp)]	Indicating refrigerant test on air conditioner system/ Display range: NO ←→YES / N/A	YES / N/A	-
[Secondary air system(Comp)]	Indicating secondary air system test/ Display range: NO ←→YES / N/A	YES / N/A	-
[Evaporative purge system(Comp)]	Indicating test on evaporative emission purge control system/ Display range: NO ←→YES / N/A	YES / N/A	-
[Heated catalyst(Comp)]	Indicating test on heat type catalyst/ Display range: NO ←→YES / N/A	YES / N/A	-
[Catalyst Diagnosis(Comp)]	Indicating catalyst test/ Display range: NO ←→YES / N/A	YES / N/A	-
[Time while MIL lighted]	Indicating engine operation time from MIL illumination/ Display range: 0 to 65535min	-	-
[Engine Speed]	Indicating engine speed (CAN reception data)/ Display range: 0 to 51199.21875r/min	0 r/min: When engine is stopped (IG ON)	When abnormal, there may be a CAN communication malfunction.
[Coolant Temp.]	Indicating coolant temperature (CAN reception data)/ Display range: -40 to 215°C	Gradually increasing: Cold start →warmed up	When abnormal, there may be a CAN communication malfunction.
[Accel. Opening Angle]	Indicating acceleration opening angle (CAN reception data)/ Display range: 0 to 127.5%	0 %: Accelerator pedal not depressed	When abnormal, there may be a CAN communication malfunction.
[Throttle Opening Angle]	Indicating throttle opening angle (CAN reception data)/ Display range: 0 to 127.5%	0 %: When engine is stopped (IG ON)	When abnormal, there may be a CAN communication malfunction.

AT

Item name [Symbol]	Description/display range	Normal value	Remarks
[Stop Light Switch]	Indicating that the brake pedal is depressed/ Display range: ON←→OFF	OFF→ON: With brake pedal released →depressed	When abnormal, there may be a stop light switch ASSY signal malfunction.
[Shift SW Status (P Range)]	Indicating select lever in P position/ Display range: ON←→OFF	ON: Select lever in P	When abnormal, there may be a neutral start switch ASSY (P) signal malfunction.
[Shift SW Status (R Range)]	Indicating select lever in R position/ Display range: ON←→OFF	OFF→ON: Select lever in N→R	When abnormal, there may be a neutral start switch ASSY (R) signal malfunction.
[Shift SW Status (N Range)]	Indicating select lever in N position/ Display range: ON←→OFF	ON: Select lever in N	When abnormal, there may be a neutral start switch ASSY (N) signal malfunction.
[Shift SW Status (D Range)]	Indicating select lever in D position/ Display range: ON←→OFF	OFF→ON: Select lever in N→D	When abnormal, there may be a neutral start switch ASSY (D) signal malfunction.
[Manual SW]	Indicating M position/ Display range: ON←→OFF	OFF→ON: Select lever in D→M	When abnormal, there may be a transmission control switch (M) signal malfunction.
[Up SW]	Indicating transmission control switch (+)/ Display range: ON←→OFF	OFF→ON: Select lever in M →“+”	When abnormal, there may be a transmission control switch (SFTU) signal malfunction.
[Down SW]	Indicating transmission control switch (-)/ Display range: ON←→OFF	OFF→ON: Select lever in M →“-”	When abnormal, there may be a transmission control switch (SFTD) signal malfunction.
[Snow Mode]	Indicating SNOW mode status/ Display range: ON←→OFF	OFF→ON: 2nd start OFF →ON	When abnormal, there may be a pattern select SW system malfunction.
[Snow SW]	Indicating pattern select (SNOW) switch/ Display range: ON←→OFF	OFF→ON: Pattern select (SNOW) switch OFF→ON	When abnormal, there may be a pattern select (SNOW) switch malfunction.
[Sport SW]	Indicating pattern select (SPORT) switch/ Display range: ON←→OFF	OFF→ON: Pattern select (SPORT) switch OFF→ON	When abnormal, there may be a pattern select (SPORT) switch malfunction.
[A/C Switch]	Indicating A/C ON / OFF status/ Display range: ON←→OFF	-	-
[TC Terminal]	Indicating shorted (ON) condition of TC terminal (DLC3)/ Display range: ON←→OFF	ON: TC terminal shorted	-
[Turbine Revolution Speed]	Indicating input revolution speed/ Display range: 0 to 12750rpm	Almost the same as engine idle speed When the vehicle is parked with select lever in P or N position (when engine idling)	When abnormal, there may be an NT signal malfunction.
		0 r/min: The vehicle is parked with select lever in D position	When abnormal, there may be an NT signal malfunction.
		Almost the same as engine speed When driving at a constant speed	When abnormal, there may be an NT signal malfunction.
[AT Speed]	Indicating output revolution speed/ Display range: 0 to 255km/h {158MPH}	0 km/h {0 MPH}: When vehicle is parked	When abnormal, there may be an SP2 signal malfunction.
		No significant fluctuation: When driving at a constant speed	When abnormal, there may be an SP2 signal malfunction.
[ATF Temp.]	Indicating transmission oil temperature/ Display range: -40 to 215°C	Ambient air temperature : IG ON when the engine is cold	When abnormal, the THO1 voltage may be abnormal.
		50 to 100°C: After stall test	When abnormal, the THO1 voltage may be abnormal.
		-40°C: When sensor is disconnected	When abnormal, the THO1 voltage may be abnormal.
		150°C or more: When sensor is shorted	When abnormal, the THO1 voltage may be abnormal.
[Shift Indicator Lamp UP Shift]	Indicating illumination indication status on shift indicator lamp UP side/ Display range: ON←→OFF	-	-

AT

Item name [Symbol]	Description/display range	Normal value	Remarks
[Shift Indicator Lamp Down Shift]	Indicating illumination indication status on shift indicator lamp DOWN side/ Display range: ON←→OFF	-	-
[Sport Mode]	Indicating SPORT mode status/ Display range: ON←→OFF	OFF→ON: SPORT mode OFF→ON	When abnormal, there may be a pattern select SW system malfunction.
[Control the Shift Position]	Indicating gear positions (ranges)/ Display range: 1st to 6th gear	Shifted into each gear position: Driving	• When abnormal, the VTA1 voltage may be abnormal. • When abnormal, the VPA voltage may be abnormal. • When abnormal, there may be an SPD signal malfunction. • When abnormal, there may be a solenoid signal malfunction.
[Lock up status]	Indicating that lock-up is operating/ Display range: ON←→OFF	OFF→ON: Lock-up OFF →ON	• When abnormal, the VTA1 voltage may be abnormal. • When abnormal, the VPA voltage may be abnormal. • When abnormal, there may be an NT signal malfunction. • When abnormal, there may be an SP2 signal malfunction. • When abnormal, there may be an SLU signal malfunction.
[SLT Solenoid Status]	Indicating line pressure control solenoid ASSY (SLT) operating status/ Display range: ON←→OFF	OFF→ON: Acceleration fully opened →fully closed	When abnormal, there may be a line pressure control solenoid ASSY (SLT) signal malfunction.
[Activate the Lock Up (SLU)]	Indicating lock-up control solenoid (SLU) operating status/ Display range: ON←→OFF	OFF→ON: Lock-up OFF →ON	When abnormal, there may be a lock-up control solenoid (SLU) signal malfunction.
[Last 5 Digits ECU Part Number]	Indicating last 5 digits of ECM part number	-	-
[# Codes(Include History)]	Indicating the number of trouble codes which have not experienced normal driving cycle in consecutive 40 warming up	-	-
[Number Of ALL DTCs]	Indicating the number of all DTCs/ Display range: 0 to 255	-	-
[Trip Count]	Indicating the number of all DTCs/ Display range: 0 to 65535trip	-	-
[Count]	Indicating the way to count time after IG ON	Normal count	When abnormal, there may be a CAN communication malfunction.
[Time Count]	Indicating time elapsed after IG ON/ Display range: 0 to 53687091100ms	-	-

SSM4 screen: [Body Control] →[Select Function] →[Data monitor]

Item name	Description/display range	Normal value	Remarks
[Stop Light Switch]	Indicating that the brake pedal is depressed/ Display range: ON←→OFF	OFF→ON: With brake pedal released →depressed	When abnormal, there may be a stop light switch ASSY signal malfunction.
[Shift P Signal]	Indicating select lever in P position/ Display range: ON←→OFF	ON: Select lever in P	When abnormal, there may be a select lever P switch malfunction.
[Ignition Power Supply Voltage]	Indicating IG power supply voltage/ Display range: 0 to 21.4V	11 to 14 V: During idling	When abnormal, the IG voltage may be abnormal.
[Shift Lock Solenoid]	Indicating shift lock solenoid operation status/. Display range: ON←→OFF	OFF→ON: Shift lock OFF →ON	When abnormal, there may be a shift lock solenoid malfunction.

2. Inspection with SSM4 (active test)
   (1) Using SSM4, display the [Active Test] screen according to the screen and perform the system operation check.

AT

SSM4 screen: [Transmission Control System] →[Select Function] →[Active Test]

Item name	Description	Restriction
[Control the Shift Position]	Setting to any shift position is possible	• Vehicle speed is less than 50 km/h {31 MPH} • Any of the following is established. – Throttle idling status – Gear range 4th or lower
[Activate the Solenoid(S1)]	Turning ON ←→OFF of transmission 3 way solenoid ASSY (S1) is possible.	• Vehicle speed: 0 km/h {0 MPH} • P or N position • Engine speed: 0 r/min
[Activate the Solenoid(S2)]	Turning ON ←→OFF of transmission 3 way solenoid ASSY (S2) is possible.	• Vehicle speed: 0 km/h {0 MPH} • P or N position • Engine speed: 0 r/min
[Activate the Solenoid(S3)]	Turning ON ←→OFF of transmission 3 way solenoid ASSY (S3) is possible.	• Vehicle speed: 0 km/h {0 MPH} • P or N position • Engine speed: 0 r/min
[Activate the Solenoid(S4)]	Turning ON ←→OFF of transmission 3 way solenoid ASSY (S4) is possible.	• Vehicle speed: 0 km/h {0 MPH} • P or N position • Engine speed: 0 r/min
[Activate the Solenoid(SL1)]	MIN current ←→MAX current of clutch control solenoid No. 1 (SL1) is possible.	• Vehicle speed: 0 km/h {0 MPH} • P or N position • Engine speed: 0 r/min
[Activate the Solenoid(SL2)]	MIN current ←→MAX current of clutch control solenoid No. 1 (SL2) is possible.	• Vehicle speed: 0 km/h {0 MPH} • P or N position • Engine speed: 0 r/min
[Activate the Lock Up]	Lock up ON ←→OFF is possible.	• Throttle opening angle less than 35% • Vehicle speed is 50 km/h {31 MPH} or more • Gear range 5th or higher
[Activate the Solenoid(SLU)]	MIN current ←→MAX current of lock-up control solenoid (SLU) is possible.	• Vehicle speed: 0 km/h {0 MPH} • P or N position • Engine speed: 0 r/min
[Activate the Solenoid(SR)]	Turning ON ←→OFF of transmission 3 way solenoid ASSY (SR) is possible.	• Vehicle speed: 0 km/h {0 MPH} • P or N position • Engine speed: 0 r/min
[Activate the Solenoid(SLT)]	MIN current ←→MAX current of line pressure control solenoid ASSY (SLT) is possible. (MAX current →duty ratio 100% (line pressure at idling)) (MIN current →duty ratio 0% (line pressure at stall))	• Vehicle speed 0 km/h {0 MPH} • P or N position • Engine speed: 0 r/min
[TC and TE1]*	Used when changing to the oil temperature detection mode	-

*: Warning diagnoses are not displayed in a list.

SSM4 screen: [Body Control] →[Select Function] →[Active Test]

Item name	Description	Restriction
[Shift Lock]	Shift lock output ON ←→OFF is possible.	-

Failsafe list

When the following codes are recorded on the transmission control computer ASSY, the fail safe mode is initiated.

Diagnostic codes	Fail safe status	Fail safe mode cancel condition
P0601	Locked to 4th gear (all solenoids are OFF)	• IG OFF/ON is performed.
P062F	None	• None
P0707	None	• None
P0708	None	• None
P0711	Prohibiting gear shift to 5th and 6th	• IG OFF/ON is performed. • DTC clear is performed. • After ATF temperature of 20°C or higher is detected, the vehicle speed of 0 km/h {0 MPH} is detected.
P0712	Prohibiting gear shift to 5th and 6th	• IG OFF/ON is performed. • DTC clear is performed. • After ATF temperature of 0°C or higher to lower than 150°C is consecutively detected for 10 seconds, the vehicle speed of 0 km/h {0 MPH} is detected.

Diagnostic codes	Fail safe status	Fail safe mode cancel condition
P0713	Prohibiting gear shift to 5th and 6th	• IG OFF/ON is performed. • DTC clear is performed. • After ATF temperature of 0°C or higher to lower than 150°C is consecutively detected for 10 seconds, the vehicle speed of 0 km/h {0 MPH} is detected.
P0716	Prohibiting gear shift to 5th and 6th	• IG OFF/ON is performed. • DTC clear is performed. • After the transmission revolution sensor (NT) is confirmed as normal, the transmission revolution sensor (SP2) detects the vehicle speed of 0 km/h {0 MPH}.
P0717	Prohibiting gear shift to 5th and 6th	• IG OFF/ON is performed. • DTC clear is performed. • After the transmission revolution sensor (NT) pulse is received, the transmission revolution sensor (SP2) detects the vehicle speed of 0 km/h {0 MPH}.
P0721	Prohibiting gear shift to 5th and 6th	• IG OFF/ON is performed. • DTC clear is performed. • After the transmission revolution sensor (SP2) is confirmed as normal, the transmission revolution sensor (NT) detects the vehicle speed of 0 km/h {0 MPH}.
P0722	Prohibiting gear shift to 5th and 6th	• IG OFF/ON is performed. • DTC clear is performed. • After the transmission revolution sensor (SP2) pulse is received, the transmission revolution sensor (NT) detects the vehicle speed of 0 km/h {0 MPH}.
P0729	Prohibiting gear shift to 6th	• DTC clear is performed.
P0751	Prohibiting gear shift to 4th, 5th and 6th Prohibiting gear shift to 1st and 2nd in M mode	• DTC clear is performed.
P0752	None	None
P0756	None	None
P0757	None	None
P0761	Prohibiting start in 2nd gear	• DTC clear is performed.
P0762	Prohibiting gear shift to 4th, 5th and 6th	• DTC clear is performed.
P0766	Prohibiting gear shift to 4th, 5th and 6th	• DTC clear is performed.
P0767	None	None
P0776	Prohibiting gear shift to 4th, 5th and 6th	• DTC clear is performed.
P0781	Prohibiting gear shift to 4th, 5th and 6th Prohibiting gear shift to 1st and 2nd in M mode	• DTC clear is performed.
P0882	Locked to 4th gear (all solenoids are OFF)	• IG OFF/ON is performed. • DTC clear is performed.
P0894	Torque limitation at error detection in 1st trip Torque limitation and prohibiting gear shift to 5th and 6th at error detection in 2nd trip or later	• DTC clear is performed.
P0961	Locked to 4th gear (all solenoids are OFF)	• IG OFF/ON is performed. • DTC clear is performed.
P0962	Locked to 4th gear (all solenoids are OFF)	• IG OFF/ON is performed. • DTC clear is performed.
P0963	Prohibiting gear shift to 5th and 6th After shifting down from 5th or 6th, locked to 4th	• IG OFF/ON is performed. • DTC clear is performed.
P0965	Locked to 4th gear (all solenoids are OFF)	• IG OFF/ON is performed. • DTC clear is performed.
P0966	Locked to 4th gear (all solenoids are OFF)	• IG OFF/ON is performed. • DTC clear is performed.
P0967	Locked to 4th gear (all solenoids are OFF)	• IG OFF/ON is performed. • DTC clear is performed.
P0973	Locked to 4th gear (all solenoids are OFF)	• IG OFF/ON is performed. • DTC clear is performed.
P0974	Locked to 4th gear (all solenoids are OFF)	• IG OFF/ON is performed. • DTC clear is performed.
P0976	Locked to 4th gear (all solenoids are OFF)	• IG OFF/ON is performed. • DTC clear is performed.

Diagnostic codes	Fail safe status	Fail safe mode cancel condition
P0977	Locked to 4th gear (all solenoids are OFF)	• IG OFF/ON is performed. • DTC clear is performed.
P0979	Locked to 4th gear (all solenoids are OFF)	• IG OFF/ON is performed. • DTC clear is performed.
P0980	Locked to 4th gear (all solenoids are OFF)	• IG OFF/ON is performed. • DTC clear is performed.
P0982	Locked to 4th gear (all solenoids are OFF)	• IG OFF/ON is performed. • DTC clear is performed.
P0983	Locked to 4th gear (all solenoids are OFF)	• IG OFF/ON is performed. • DTC clear is performed.
P0985	Locked to 4th gear (all solenoids are OFF)	• IG OFF/ON is performed. • DTC clear is performed.
P0986	Locked to 4th gear (all solenoids are OFF)	• IG OFF/ON is performed. • DTC clear is performed.
P160A	Locked to 4th gear (all solenoids are OFF)	• IG OFF/ON is performed.
P1817	None	None
P2714	Torque limitation at error detection in 1st trip Torque limitation and prohibiting gear shift to 5th and 6th at error detection in 2nd trip or later	• DTC clear is performed.
P2719	Locked to 4th gear (all solenoids are OFF)	• IG OFF/ON is performed. • DTC clear is performed.
P2720	Locked to 4th gear (all solenoids are OFF)	• IG OFF/ON is performed. • DTC clear is performed.
P2721	Locked to 4th gear (all solenoids are OFF)	• IG OFF/ON is performed. • DTC clear is performed.
P2757	None	None
P2758	Prohibiting 2nd start	• Lock-up control solenoid (SLU) ON/OFF normal detection • DTC clear is performed.
P2762	Prohibiting 2nd start	• IG OFF/ON is performed. • DTC clear is performed.
P2763	Prohibiting 2nd start	• IG OFF/ON is performed. • DTC clear is performed.
P2764	Prohibiting 2nd start	• IG OFF/ON is performed. • DTC clear is performed.
U0073	Prohibiting gear shift to 5th and 6th Prohibiting gear shift to 1st	• IG OFF/ON is performed. • DTC clear is performed.
U0100	Prohibiting gear shift to 5th and 6th	• IG OFF/ON is performed. • DTC clear is performed. • After communication is properly performed 2 times consecutively, the vehicle speed of 0 km/h {0 MPH} is detected.
U0122	Prohibiting gear shift to 1st	• IG OFF/ON is performed. • DTC clear is performed. • After communication is properly performed 2 times consecutively, the vehicle speed of 0 km/h {0 MPH} is detected.
U0140	None	None
U0155	None	None
U0401	Prohibiting gear shift to 5th and 6th	• IG OFF/ON is performed. • DTC clear is performed. • After ECM properly calculates data for a certain period of time consecutively, the vehicle speed of 0 km/h {0 MPH} is detected.
U0416	Prohibiting gear shift to 1st	• IG OFF/ON is performed. • DTC clear is performed. • After AVS ECM properly calculates data for a certain period of time consecutively, the vehicle speed of 0 km/h {0 MPH} is detected.
U0422	None	None
U0423	None	None

AT

Table of solenoid continuity status at normal condition

Shifting gear range	1st	2nd	3rd	4th	5th	6th
S1	OFF	ON	ON	ON	ON	ON
S2	ON	ON	OFF	OFF	OFF	ON
S3	ON	ON	ON	OFF	OFF	OFF
S4	OFF	ON	OFF	OFF	ON	ON
SL1	OFF	OFF	OFF	OFF	ON	ON
SL2	ON	OFF	OFF	ON	OFF	OFF
SR	ON	ON	ON	ON	OFF	OFF

NOTE:

ON: continuity status OFF: non-continuity status

Table of gear range when shift solenoid is abnormal (at D position)

Shift direction range	1st	2nd	3rd	4th	5th	6th
S1 ON malfunction	2nd	2nd	3rd	4th	5th	6th
S1 OFF malfunction	1st	2nd	3rd	4th	5th	N
S2 ON malfunction	1st	2nd	2nd	4th	6th	6th
S2 OFF malfunction	3rd	3rd	3rd	4th	5th	5th
S3 ON malfunction	1st	2nd	3rd	3rd	N	N
S3 OFF malfunction	3rd	6th	4th	4th	5th	6th
S4 ON malfunction	1st	2nd	3rd	4th	5th	6th
S4 OFF malfunction	1st	2nd	3rd	4th	4th	4th

Table of gear range when shift solenoid is abnormal (in manual mode)

Shift direction range	1st	2nd	3rd	4th	5th	6th
S1 ON malfunction	2nd	2nd	3rd	4th	5th	6th
S1 OFF malfunction	1st	2nd	3rd	4th	5th	N
S2 ON malfunction	1st	2nd	2nd	4th	6th	6th
S2 OFF malfunction	3rd	3rd	3rd	4th	5th	5th
S3 ON malfunction	1st	2nd	3rd	3rd	N	N
S3 OFF malfunction	1st	6th	4th	4th	5th	6th
S4 ON malfunction	2nd	2nd	3rd	4th	5th	6th
S4 OFF malfunction	1st	2nd	3rd	4th	4th	4th

AT

DTC B1016 Shift lock circuit Failure

Circuit description

When IGN signal, P switch signal, and STP signal is input, the main body ECM (network gateway computer) outputs signals to the shift lock solenoid.

DTC No.	DTC detecting condition 1.Diagnosis condition 2.Abnormal condition 3.Abnormal period 4.Other	Inspection parts
B1016	1. IG ON 2. Open, power supply-output short, or GND-output short in shift lock circuit 3. 3 seconds or more 4. 1 trips	• Main body ECM (network gateway computer) • Shift lock solenoid • Wiring harness or connector

Circuit figure

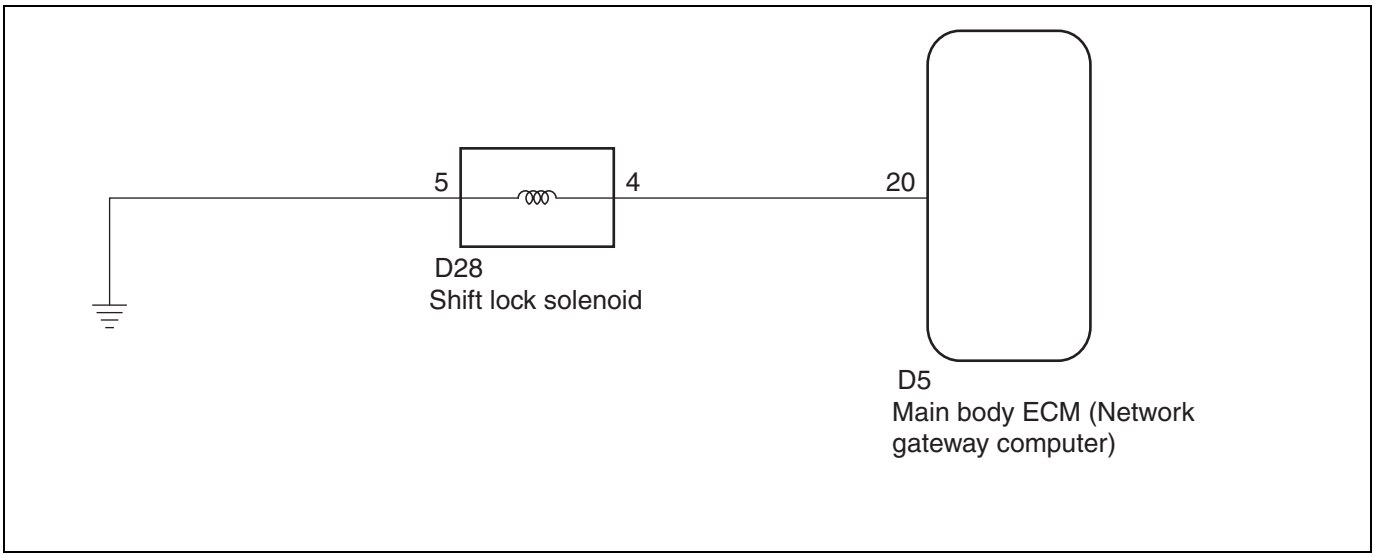

Inspection steps

1	Check of shift lock solenoid unit

(1) Check the shift lock solenoid unit. (Refer to AT - 211)

NG → Replacement of shift lock solenoid (refer to AT - 199)

OK

2	Check wiring harness and connector (main body ECM (network gateway computer) - shift lock solenoid)

NOTE:
For inspection procedures and precautions, refer to IN - 36.

(1) Disconnect the connector D5 of the main body ECM (network gateway computer).
(2) Disconnect the connector D28 of shift lock solenoid.
(3) Measure the resistance between the terminals.

Specified resistance (disconnection check)

Inspection terminals	Inspection conditions	Standard value
D5-20 - D28-4	Always	Less than 1 Ω

Specified resistance (short check)

Inspection terminals	Inspection conditions	Standard value
D5-20 and D28-4 - chassis ground	Always	10 k Ωor more

(4) Connect the connector D5 of the main body ECM (network gateway computer).
(5) Connect the connector D28 of the shift lock solenoid.

NG → Repair or replacement of wiring harness or connector

OK

3	Check wiring harness and connector (shift lock solenoid-chassis ground)

NOTE:
For inspection procedures and precautions, refer to IN - 36.
(1) Disconnect the connector D28 of shift lock solenoid.
(2) Measure the resistance between the terminals.
Resistance

Inspection terminals	Inspection conditions	Standard value
D28-5 - chassis ground	Always	Less than 1 Ω

(3) Connect the connector D28 of the shift lock solenoid.

NG → Repair or replacement of wiring harness or connector

OK

Replacement of the main body ECM (network gateway computer) (Refer to PD - 25)

DTC	P0601	Internal Control Module Memory Check Sum Error

Circuit description
The value calculated by the transmission control computer is compared with the data stored in the transmission control computer ASSY when IG is ON, and when they do not match 2 times consecutively, DTC is detected and the learning is prohibited.
If the problem persists, cut continuity to all the solenoid (lock at 4th gear).

AT

DTC No. SAE/TCCS	DTC detecting condition 1.Diagnosis condition 2.Abnormal condition 3.Abnormal period 4.Other	Inspection parts
P0601	1. IG ON When DTC clear required 2. Transmission control computer ASSY, internal error 3. - 4. 1 trips	• Transmission control computer ASSY

Monitor description
TCM observes inner operation. If a defect is found in inner operation, TCM turns on MIL and records diagnostic codes.
MONITOR STRATEGY

Applicable diagnostic codes	P0601: Internal Control Module Memory Check Sum Error
Required sensor / component	TCM
Operation frequency	Once per driving cycle
Period	2 times
MIL operation	Immediate
Operation order	None

TYPICAL ENABLING CONDITIONS
Either of the following conditions must be satisfied: condition (A) or (B)
Condition (A)

If the following diagnostic code is not present, the monitor operates.	None

IG SW is turned from OFF to ON.	Yes

Condition (B)

If the following diagnostic code is not present, the monitor operates.	None
A request to clear the diagnostic code from the diagnosis tool is received.	Yes

TYPICAL MALFUNCTION THRESHOLDS

Total data calculated by flash ROM	None (flash ROM checksum data)

Inspection steps

NOTE:

Read the freeze frame data using the SSM4. A part of the engine running conditions under which the engine trouble occurred is recorded in the freeze frame data, which is useful for troubleshooting.

1	Replacement of transmission control computer ASSY

(1) Replace the transmission control computer ASSY. (Refer to AT - 322)

Next

AT unit correction (refer to AT - 19)

AT

DTC	P062F	EEPROM Error

Circuit description

The transmission control computer calculates the integration value in the transmission control computer ASSY when IG OFF turns to ON, and when the value does not match the value stored in the transmission control computer, DTC is output.
However, calculation is not performed when switching by consecutive operation of the ignition switch is executed.

DTC No. SAE/TCCS	DTC detecting condition 1.Diagnosis condition 2.Abnormal condition 3.Abnormal period 4.Other	Inspection parts
P062F	1. IG ON 2. Transmission control computer ASSY inside malfunction 3. - 4. 1 trips	• Transmission control computer ASSY

Monitor description

TCM observes inner operation. If a defect is found in inner operation, TCM turns on MIL and records diagnostic codes.

MONITOR STRATEGY

Applicable diagnostic codes	P062F: EEPROM Error
Required sensor / component	TCM
Operation frequency	Once per driving cycle
Period	1 time
MIL operation	Immediate
Operation order	None

TYPICAL ENABLING CONDITIONS

If the following diagnostic code is not present, the monitor operates.	None
IG SW is turned from OFF to ON.	Yes

TYPICAL MALFUNCTION THRESHOLDS

Total value calculated by EEPROM	None (total value recorded in EEPROM)

Inspection steps

1	Replacement of transmission control computer ASSY

(1) Replace the transmission control computer. (Refer to AT - 322)

Next

AT unit correction

DTC	P0707	Transmission Range Sensor "A" Circuit Low

DTC	P0708	Transmission Range Sensor "A" Circuit High

Circuit description

Shift position is detected by inputting the signal from the neutral start switch ASSY to the transmission control computer ASSY. Engine can start only when the select lever is in P or N position.

AT

DTC No. SAE/TCCS	DTC detecting condition 1.Diagnosis condition 2.Abnormal condition 3.Abnormal period 4.Other	Inspection parts
P0707	1. Transmission revolution sensor (SP2) in normal condition and vehicle speed 30 km/h {19 MPH} or more Learning control is not prohibited. 2. All contacts of shift positions P, R, N, and D turned to OFF 3. Continuing 30 seconds 4. 2 trips	• Neutral start switch ASSY • Wiring harness and connector • Transmission control computer ASSY
P0708	1. Learning control is not prohibited. 2. 2 or more shift position switches turned to ON 3. Continuing 10 seconds 4. 1 trips	• Neutral start switch ASSY • Wiring harness and connector • Transmission control computer ASSY

Monitor description

These diagnostic codes indicate problems of the wiring harness in the neutral start switch ASSY and neutral start switch ASSY circuit.

The neutral start switch ASSY detects the select lever position and sends signals to TCM.

For safety, the neutral start switch ASSY detects the select lever position. It is to allow the engine to start only when the select lever is in P or N position.

The neutral start switch ASSY sends signals corresponding to shift positions (P, R, N, D, or M) to TCM. When receiving 2 or more position signals at one time, TCM determines that the switch or related parts have a problem. TCM turns on MIL and records the diagnostic codes.

If open or short circuit is detected, all contacts of shift positions are turned to OFF.

MONITOR STRATEGY

Applicable diagnostic codes	P0707: Transmission Range Sensor "A" Circuit Low P0708: Transmission Range Sensor "A" Circuit High
Required sensor / component	Neutral start switch ASSY
Operation frequency	Consecutive
Period	P0707: 2 seconds ×15 times P0708: 2 seconds ×5 times
MIL operation	P0707: 2nd driving cycle P0708: Immediate
Operation order	None

TYPICAL ENABLING CONDITIONS

P0707: Transmission Range Sensor "A" Circuit Low

Battery voltage	10.2 V or more
Above condition is established	2 seconds or more
Fail safe mode (solenoid power supply shut down)	Non-active
Transmission revolution sensor (SP2) (P0722)	No defect

P0708: Transmission Range Sensor "A" Circuit High

Battery voltage	10.2 V or more
Above condition is established	2 seconds or more
Fail safe mode (solenoid power supply shut down)	Non-active

TYPICAL MALFUNCTION THRESHOLDS

P0707: Transmission Range Sensor "A" Circuit Low

The number of neutral start switch ASSY signal input	0
Vehicle speed	18.6 MPH or more

P0708: Transmission Range Sensor "A" Circuit High

The number of neutral start switch ASSY signal input	2 or more

Circuit figure

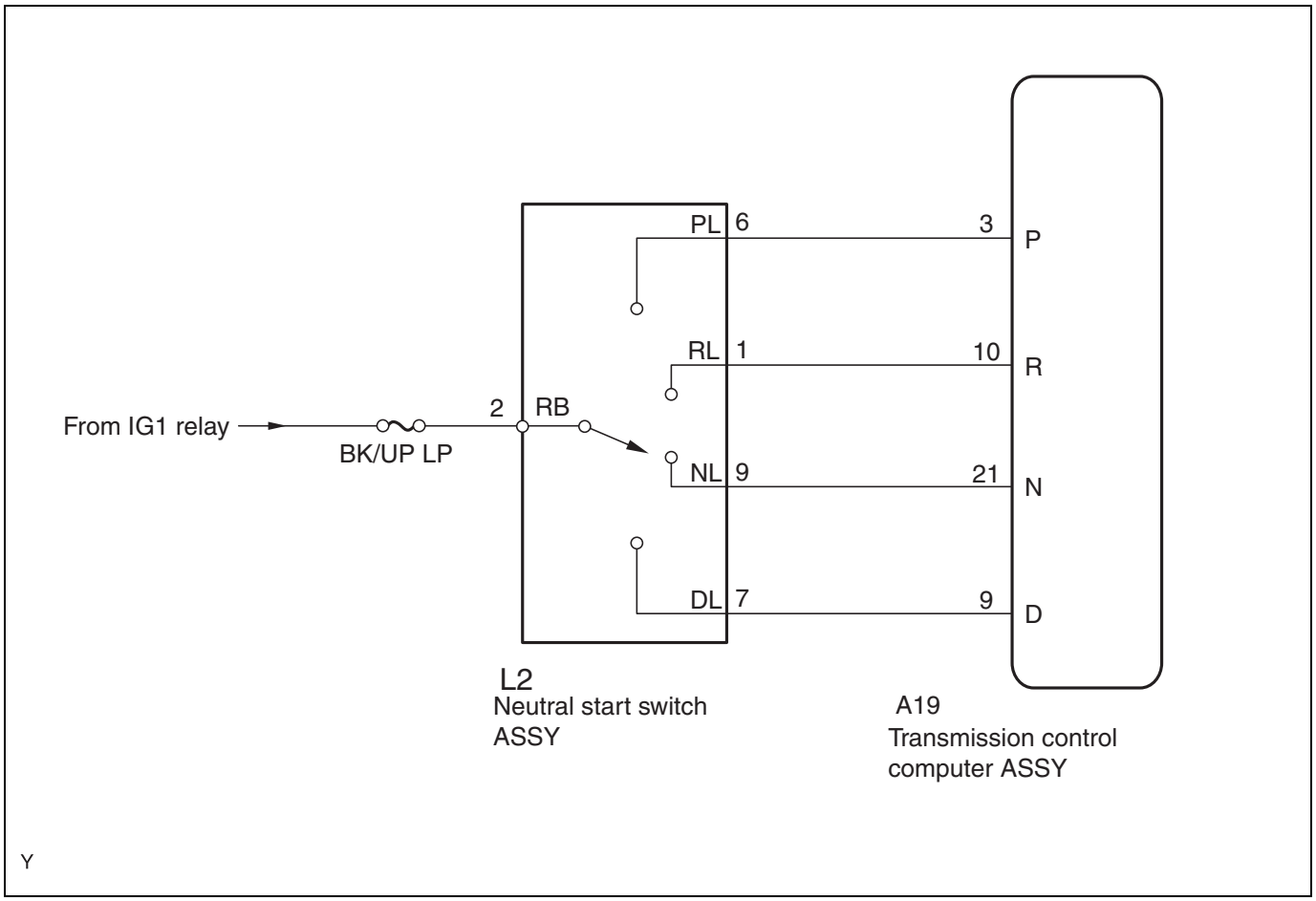

AT

Inspection steps

CAUTION:

Before performing troubleshooting, check the fuse for this circuit.

1	Perform a unit inspection of neutral start switch ASSY

(1) Disconnect the connector A19 of the transmission control computer ASSY.

(2) Measure the resistance between the terminals.

Resistance

Inspection terminals	Inspection conditions	Standard value
A19-3 (P) - L2-2 (RB)	Select lever in P position	Less than 1 Ω
A19-10 (R) - L2-2 (RB)	Select lever in R position	Less than 1 Ω
A19-21 (N) - L2-2 (RB)	Select lever in N position	Less than 1 Ω
A19-9 (D) - L2-2 (RB)	Select lever in D position	Less than 1 Ω
A19-3 (P) - L2-2 (RB)	Select lever in any other than P position	10 k Ωor more
A19-10 (R) - L2-2 (RB)	Select lever in any other than R position	10 k Ωor more

Inspection terminals	Inspection conditions	Standard value
A19-21 (N) - L2-2 (RB)	Select lever in any other than N position	10 k Ωor more
A19-9 (D) - L2-2 (RB)	Select lever in any other than D position	10 k Ωor more

(3) Connect the connector A19 of the transmission control computer ASSY.

NG → Go to Step 4.

OK

2	Check of neutral start switch ASSY (power supply voltage)

(1) Disconnect the connector L2 of the neutral start switch ASSY.
(2) Turn the ignition switch to ON.
(3) Measure the voltage between the terminals.

Voltage

Inspection terminals	Inspection conditions	Standard value
L2-2 (RB) - chassis ground	IG ON	11 to 14 V

(4) Connect the connector L2 of the neutral start switch ASSY.

NG → Repair or replacement of wiring harness or connector (power supply system)

OK

3	Replacement of transmission control computer ASSY

(1) Replace the transmission control computer ASSY. (Refer to AT - 322)

Next

AT unit correction (refer to AT - 19)

4	Check wiring harness and connector (neutral start switch ASSY - transmission control computer)

NOTE:
For the inspection procedure and precautions for wiring harnesses and connectors, refer to IN - 36.

(1) Disconnect the connector A19 of the transmission control computer ASSY.
(2) Disconnect the connector L2 of the neutral start switch ASSY.
(3) Measure the resistance between the terminals. (Refer to AT - 24for terminal arrangement of transmission control computer ASSY)

Resistance

Terminal No. (terminal symbol)	Inspection conditions	Standard value
A19-3 (P) - L2-6 (PL)	Always	Less than 1 Ω
A19-10 (R) - L2-1 (RL)	Always	Less than 1 Ω

Terminal No. (terminal symbol)	Inspection conditions	Standard value
A19-21 (N) - L2-9 (NL)	Always	Less than 1 Ω
A19-9 (D) - L2-7 (DL)	Always	Less than 1 Ω
A19-3 (P) - chassis ground	Always	10 k Ωor more
A19-10 (R) - chassis ground	Always	10 k Ωor more
A19-21 (N) - chassis ground	Always	10 k Ωor more
A19-9 (D) - chassis ground	Always	10 k Ωor more

(4) Measure the voltage between the terminals. (Refer to AT - 24for terminal arrangement of transmission control computer ASSY)

Voltage

Terminal No. (terminal symbol)	Inspection conditions	Standard value
A19-3 (P) - chassis ground	IG ON	1 V or less
A19-10 (R) - chassis ground	IG ON	1 V or less
A19-21 (N) - chassis ground	IG ON	1 V or less
A19-9 (D) - chassis ground	IG ON	1 V or less

(5) Connect the connector A19 of the transmission control computer ASSY.

(6) Connect the connector L2 of the neutral start switch ASSY.

NG → Repair or replacement of wiring harness or connector

OK

Replacement of neutral start switch ASSY (Refer to AT - 186)

DTC	P0711	Transmission Fluid Temperature Sensor "A" Circuit Range/ Performance

Circuit description

The oil temperature sensor installed in the valve body detects the oil temperature in the transmission hydraulic control circuit and inputs signals corresponding to the oil temperature to the transmission control computer ASSY.

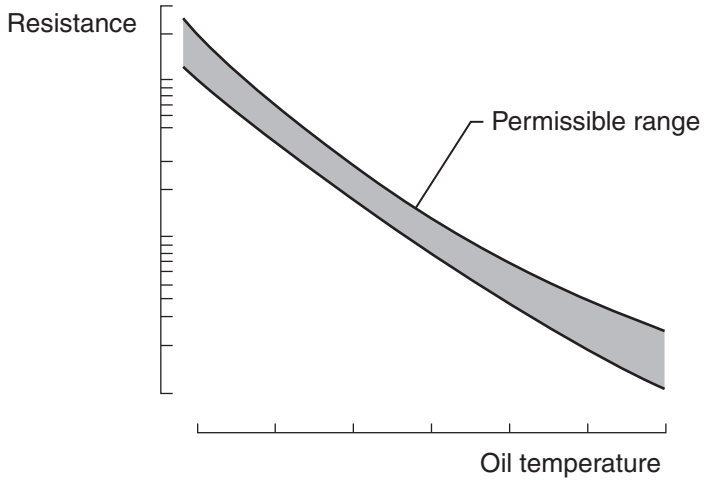

Y

Abnormality of low-temperature characteristics

DTC No. SAE/TCCS	DTC detecting condition 1.Diagnosis condition 2.Abnormal condition 3.Abnormal period 4.Other	Inspection parts
P0711	1. Detecting that neutral start switch ASSY is normal, shift position sensor is in D position, ATF temperature when IG ON is less than 20°C, current ATF temperature is less than 20°C, and vehicle speed is 40 km/h {25 MPH} or more 2. Any of the following conditions is established. · After IG is turned ON, oil temperature sensor input voltage fluctuation while diagnosis conditions are met is 0.05 V or less · Oil temperature sensor input voltage fluctuation while diagnosis conditions are met is 0.05 V or less. 3. Continuing 600 seconds 4. 2 trips	• Transmission wire (oil temperature sensor) • Wiring harness or connector

Abnormality of high-temperature characteristics

DTC No. SAE/TCCS	DTC detecting condition 1.Diagnosis condition 2.Abnormal condition 3.Abnormal period 4.Other	Inspection parts
P0711	1. Soak time from previous engine Off elapsed 6 hours or more 2. Difference between ATF and the engine coolant temperature at engine startup is more than 20°C (ATF temperature - engine coolant temperature > 20°C). 3. When continued for 300 seconds (5 minutes) 4. 2 trips	• Transmission wire (oil temperature sensor) • Wiring harness or connector • Transmission control computer ASSY

Monitor description

This diagnostic code indicates that the automatic transmission fluid (ATF) temperature sensor output is abnormal and the sensor itself is defective. The ATF temperature sensor converts ATF temperature into electric resistance. TCM specifies ATF temperature based on the resistance and detects open or short circuit in the ATF temperature circuit or defects of the ATF temperature sensor.

If the vehicle drives for a certain period of time, the ATF temperature should rise. If the ATF temperature is less than 20°C and the input voltage fluctuation is 0.05 V or less after the vehicle drives for a certain period of time, TCM recognizes the defect and turns on MIL.

MONITOR STRATEGY

Abnormality of low-temperature characteristics

Applicable diagnostic codes	P0711: Transmission Fluid Temperature Sensor "A" Circuit Range/Performance
Required sensor / component	Oil temperature sensor
Operation frequency	Consecutive
Period	10 minutes
MIL operation	2nd driving cycle
Operation order	None

Abnormality of high-temperature characteristics

Applicable diagnostic codes	P0711: Transmission Fluid Temperature Sensor "A" Circuit Range/Performance
Required sensor / component	Oil temperature sensor
Operation frequency	Consecutive
Period	5 minutes
MIL operation	2nd driving cycle
Operation order	None

AT

TYPICAL ENABLING CONDITIONS

Abnormality of low-temperature characteristics

Battery voltage	10.2 V or more
Engine speed	400 r/min or more
CAN bus OFF (U0073)	No defect
ECM without ID (U0100)	No defect
Above condition is established	2 seconds or more
ATF temperature sensor output voltage	From 0.14 V or above to 4.88 V or less
Neutral start switch ASSY (P0707, P0708)	No defect
Fail safe mode (solenoid power supply shut down)	Non-active
Range position	D (If the range position changes to P, R, or N, the timer is set to on hold status.)
Transmission oil temperature	Less than 20°C
Vehicle speed (Once the vehicle speed condition is satisfied, it is valid even while defective standards are satisfied.)	24.9 MPH or more

Abnormality of high-temperature characteristics

Battery voltage	10.2 V or more
Fail safe mode (solenoid power supply shut down)	Non-active
CAN bus OFF (U0073)	No defect
ECM without ID (U0100)	No defect
ECM communication counter (U0401)	No defect
EEPROM	No defect

Oil temperature sensor electrical fault and low stuck (P0711, P0712, P0713)	No defect

TYPICAL MALFUNCTION THRESHOLDS

Abnormality of low-temperature characteristics

Absolute change of output voltage	0.048V or less

Abnormality of high-temperature characteristics

ATF temp. - Engine coolant temp. at engine startup	More than 20°

Diagnosis overview

Possible faulty conditions: ATF temperature at engine startup and after driving is high even though a certain soak time has elapsed.

Circuit figure

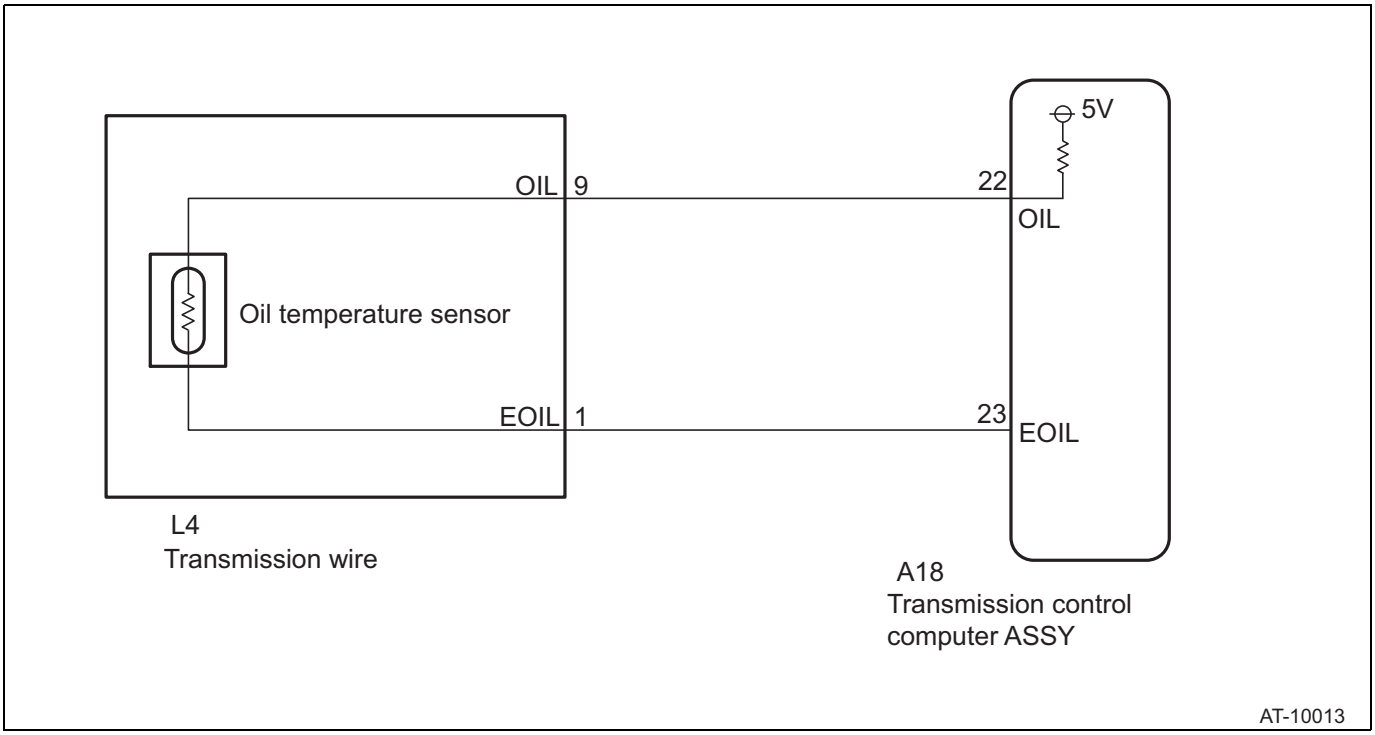

AT

Inspection steps

NOTE:

Read the freeze frame data using the SSM4. A part of the engine running conditions under which the engine trouble occurred is recorded in the freeze frame data, which is useful for troubleshooting.

1	Read the diagnostic code

(1) Follow the SSM4 on-screen instructions to check the diagnostic codes. (Refer to AT - 17)

Result

Result	Go to
Only P0711 is output.	A
P0711 and other diagnostic codes are output.	B

B → Related diagnostic code chart

A

2	Freeze frame data check

(1) Read the freeze frame data using the SSM4.
(2) Check difference between engine coolant temperature and ATF temperature.

Result

Result	Go to
ATF oil temperature - engine coolant temperature is 20°C or less.	A
ATF oil temperature - engine coolant temperature is more than 20°C.	B

B → Go to Step 4.

A

3	Transmission fluid level check

(1) Check the amount of automatic transmission fluid.
Criteria: The amount of automatic transmission fluid is correct.

NG → Fluid replenishment

OK

4	Reading of SSM4 data (ATF oil temperature)

(1) Disconnect the connector L4 of the transmission wire.
(2) Use SSM4 to display the [Data monitor] screen according to the screen display and check the ATF oil temperature.

Result

Result	Go to
ATF temperature is other than -40°C.	A
ATF temperature is -40°C.	B

(3) Connect the connector L4 of the transmission wire.

B → Repair or replacement of transmission wire (refer to AT - 172)

A

5	Replacement of transmission control computer ASSY

(1) Replace the transmission control computer ASSY. (Refer to AT - 322)

Next

AT unit correction (refer to AT - 19)

AT

DTC	P0712	Transmission Fluid Temperature Sensor "A" Circuit Low

DTC	P0713	Transmission Fluid Temperature Sensor "A" Circuit High

Circuit description

The oil temperature sensor installed in the valve body detects the oil temperature in the transmission hydraulic control circuit and inputs signals corresponding to the oil temperature to the transmission control computer ASSY.

NOTE:

- The data monitor (AT oil temperature) indicates -40°C when P0712 is output.
- The data monitor (AT oil temperature) indicates 170°C or more when P0713 is output.

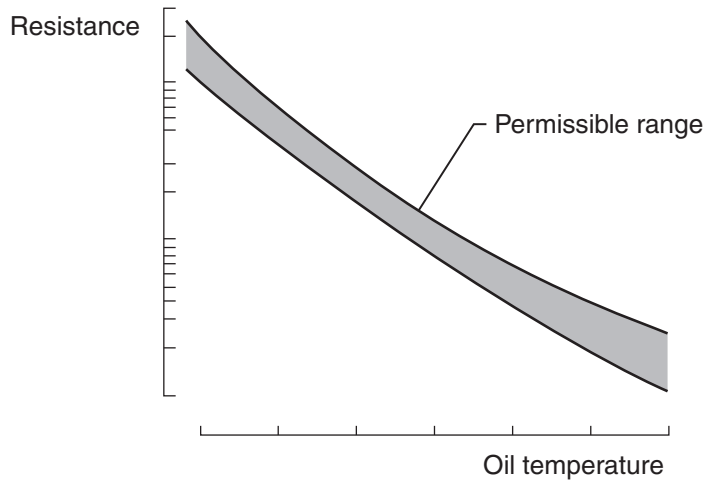

Y

DTC No. SAE/TCCS	DTC detecting condition 1.Diagnosis condition 2.Abnormal condition 3.Abnormal period 4.Other	Inspection parts
P0712	1. Learning control is not prohibited. 2. Oil temperature sensor input voltage is less than 0.14V. 3. 10 seconds durations are detected 6 times consecutively. 4. 1 trips	• Transmission wire (oil temperature sensor) • Wiring harness or connector • Transmission control computer
P0713	1. The condition that the neutral start switch ASSY is normal and the shift is in D or R position is established for 1 minute or more. Learning control is not prohibited. 2. Oil temperature sensor input voltage is 4.88V or more. 3. 1 second detections are detected 12 times consecutively. 4. 1 trips	• Transmission wire (oil temperature sensor) • Wiring harness or connector • Transmission control computer

Monitor description

These diagnostic codes indicate that there is an open or short circuit in the automatic transmission fluid (ATF) temperature sensor circuit. The automatic transmission fluid (ATF) temperature sensor converts ATF temperature into electric resistance. TCM specifies ATF temperature based on the resistance and detects open or short circuit in the ATF temperature circuit. If the ATF temperature resistance is less than 0.14V or more than 4.88V, TCM recognizes it as a defect in the ATF sensor or wiring. TCM turns on MIL and records the diagnostic codes.

MONITOR STRATEGY

Applicable diagnostic codes	P0712: Transmission fluid temperature sensor "A" circuit (low) P0713: Transmission fluid temperature sensor "A" circuit (high)
Required sensor / component	Oil temperature sensor
Operation frequency	Consecutive
Period	P0712: 10 seconds x 6 times P0713: 1 second x 12 times
MIL operation	Immediate
Operation order	None

TYPICAL ENABLING CONDITIONS

P0712: Transmission fluid temperature sensor "A" circuit (low)

Battery voltage	10.2 V or more
Engine speed	400 r/min or more
CAN bus OFF (U0073)	No defect
ECM without ID (U0100)	No defect
ECM communication counter (U0401)	No defect
Above condition is established	2 seconds or more
Fail safe mode (solenoid power supply shut down)	Non-active

P0713: Transmission fluid temperature sensor "A" circuit (high)

Battery voltage	10.2 V or more
Engine speed	400 r/min or more
CAN bus OFF (U0073)	No defect
ECM without ID (U0100)	No defect
ECM communication counter (U0401)	No defect
Above condition is established	2 seconds or more
Fail safe mode (solenoid power supply shut down)	Non-active

All of the following conditions are established.

After IG SW is turned ON, the following conditions are established.	1 minute or more
Range position	D or R
Neutral switch ASSY (P0707, P0708)	No defect

TYPICAL MALFUNCTION THRESHOLDS

P0712: Transmission fluid temperature sensor "A" circuit (low)

Output voltage	Less than 0.14V

P0713: Transmission fluid temperature sensor "A" circuit (high)

Output voltage	Greater than 4.88V

AT

Circuit figure

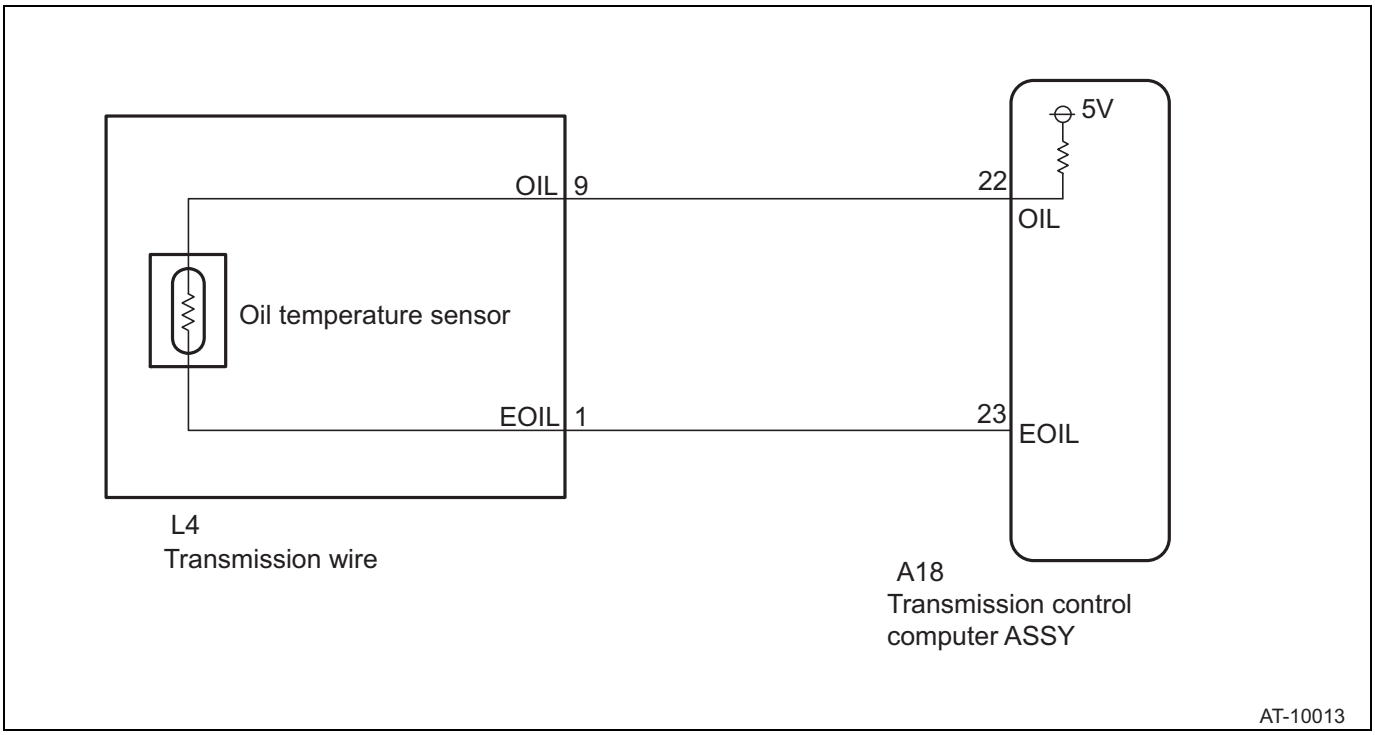

Inspection steps

AT

NOTE:

Read the freeze frame data using the SSM4. A part of the engine running conditions under which the engine trouble occurred is recorded in the freeze frame data, which is useful for troubleshooting.

1	Transmission wire unit check (oil temperature sensor)

(1) Disconnect the connector A18 of the transmission control computer ASSY.

(2) Measure the resistance between the terminals.

Resistance

Inspection terminals	Inspection conditions	Standard value
A18-22 (OIL) - A18-23 (EOIL)	Always	79 to 156 kΩ

(3) Connect the connector A18 of the transmission control computer ASSY.

NG → Go to Step 3.

OK

2	Replacement of transmission control computer ASSY

(1) Replace the transmission control computer ASSY. (Refer to AT - 322)

Next

AT unit correction (refer to AT - 19)

3	Check wiring harness and connector (transmission wire - transmission control computer ASSY)

NOTE:
For the inspection procedure and precautions for wiring harnesses and connectors, refer to IN - 36.

(1) Disconnect the connector L4 of the transmission wire.
(2) Disconnect the connector A18 of the transmission control computer ASSY.
(3) Measure the voltage between the terminals. (Refer to AT - 24for terminal arrangement of transmission control computer ASSY)

Voltage

Inspection terminals	Inspection conditions	Standard value
L4-1 (EOIL) - chassis ground	IG ON	1 V or less
L4-9 (OIL) - chassis ground	IG ON	1 V or less

(4) Measure the resistance between the terminals. (Refer to AT - 24for terminal arrangement of transmission control computer ASSY)

Resistance

Inspection terminals	Inspection conditions	Standard value
A18-22 (OIL) - L4-9	Always	1 Ωor less
A18-23 (EOIL) - L4-1	Always	1 Ωor less
L4-1 (EOIL) - chassis ground	Always	10 k Ωor more
L4-9 (OIL) - chassis ground	Always	10 k Ωor more

(5) Connect the connector L4 of the transmission wire.
(6) Connect the connector A18 of the transmission control computer ASSY.

NG → Repair or replacement of wiring harness or connector

OK

Repair or replacement of transmission wire (refer to AT - 171)

DTC	P0716	Input/Turbine Shaft Speed Sensor "A" Circuit Range/ Performance

Circuit description

The transmission revolution sensor (NT) inputs the input shaft revolution speed to the transmission control computer ASSY as a signal.

The transmission control computer ASSY performs shift timing control based on signals from transmission revolution sensor (NT) and transmission revolution sensor (SP2).

DTC No. SAE/TCCS	DTC detecting condition 1.Diagnosis condition 2.Abnormal condition 3.Abnormal period 4.Other	Inspection parts
P0716	1. Engine RPM remains 400 rpm or higher for 2 seconds or more. With the shift position sensor in D position, a ratio of the vehicle speed determined from the output vehicle speed sensor to VDC vehicle speed is less than 5 %, and a ratio of the vehicle speed determined from the engine RPM and VDC wheel speed is less than 5 %. (2.5 seconds has elapsed after shift position has moved to D position. However, when the oil temperature sensor is faulty and the oil temperature is 20°C or lower, 10 seconds or more passed after shifting to D position). 2. Ratio of vehicle speed determined from transmission revolution sensor (NT) to VDC wheel speed is more than15 %. 3. 10 seconds 4. 1 trips	• Transmission revolution sensor (NT) • Wiring harness or connector • Transmission control computer ASSY

Monitor description

Compare the vehicle speed determined from the transmission revolution sensor (NT) and the VDC wheel speed to check if an abnormal signal is emitted from the transmission revolution sensor (NT).

If a ratio of the vehicle speed determined from the transmission revolution sensor (NT) to VDC wheel speed is more than 15 %, the TCM detects a defect, turns on MIL, and records the diagnostic code.

AT

MONITOR STRATEGY

Applicable diagnostic codes	Input/Turbine Shaft Speed Sensor "A" Circuit Range/Performance
Required sensor / component	Transmission revolution sensor (NT)
Operation frequency	Consecutive
Period	10 seconds
MIL operation	Immediate
Operation order	None

TYPICAL ENABLING CONDITIONS

Battery voltage	10.2 V or more
Engine speed	400 r/min or more
Above condition is established	2 seconds or more
Transmission range	D range
|1 - VDC wheel speed / Vehicle speed| ×100	Less than 5%
|1 - VDC wheel speed / Vehicle speed determined from engine RPM| ×100	Less than 5%
Time elapsed after D range selection	10 seconds or more (when ATF temperature is less than 20 °C or ATF temperature sensor has a defect.)
	2.5 seconds or more (ATF temperature is 20°C or more)
Fail safe mode (solenoid power supply shut down)	Non-active
CAN bus OFF (U0073)	No defect
No VDC ID (U0122)	No defect
VDC communication counter (U0416)	No defect
VDC wheel speed sensor	No defect
VDC wheel speed	30 km/h or more
Current gear range	2nd speed or higher

Transmission revolution sensor (NT) (P0717)	No defect
Neutral start switch ASSY (P0707, P0708)	No defect
Transmission 3 way solenoid ASSY (S1) (P0973, P0974)	No defect
Transmission 3 way solenoid ASSY (S2) (P0976, P0977)	No defect
Transmission 3 way solenoid ASSY (S3) (P0979, P0980)	No defect
Transmission 3 way solenoid ASSY (S4) (P0982, P0983)	No defect
Transmission 3 way solenoid ASSY (SR) (P0985, P0986)	No defect
Clutch control solenoid No.1 (SL1) (P0961, P0962, P0963)	No defect
Clutch control solenoid No.2 (SL2) (P0965, P0966, P0967)	No defect
Line pressure control solenoid ASSY (SLT) (P2720, P2721, P2719)	No defect
Engine torque signal	No defect
Engine speed	No defect
Transmission revolution sensor (SP2) (P0721, P0722)	No defect

TYPICAL MALFUNCTION THRESHOLDS

|1 - VDC wheel speed / Vehicle speed determined from turbine speed| ×100	15% or more

Circuit figure

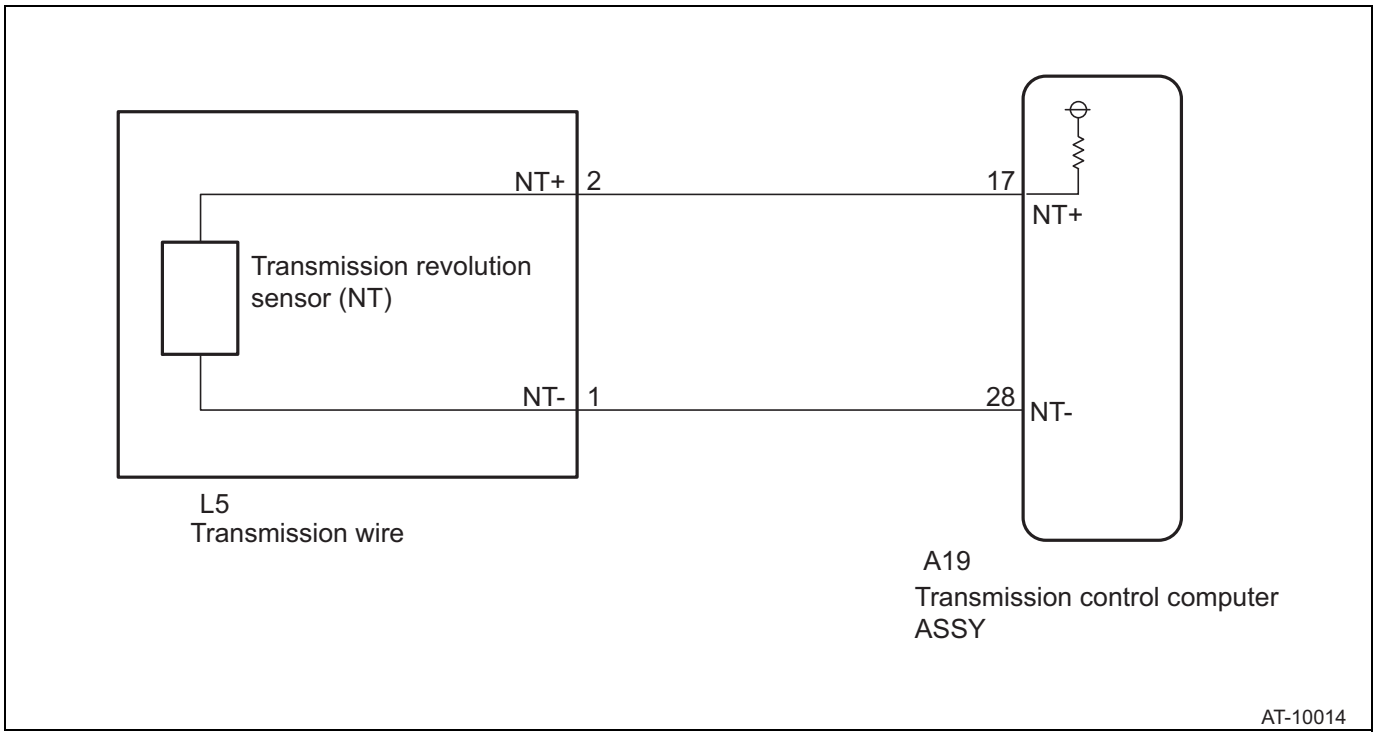

AT

Inspection steps

NOTE:

Read the freeze frame data using the SSM4. A part of the engine running conditions under which the engine trouble occurred is recorded in the freeze frame data, which is useful for troubleshooting.

1	Check of transmission revolution sensor (NT) installation condition

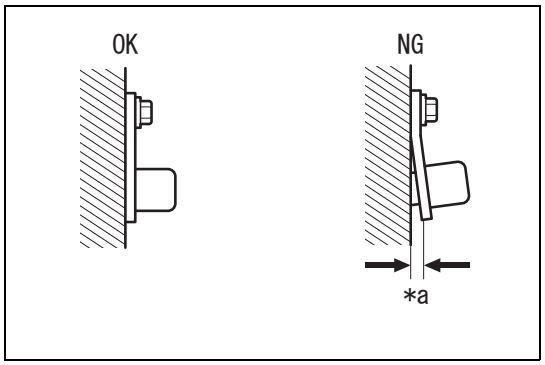

(1) Check the installation condition of the transmission revolution sensor (NT).
Criteria: The mounting bolt is not loosened and the sensor is not lifted or tilted.

Captions in illustration

*a	Clearance

NG → Repair of installation condition or replacement of transmission revolution sensor (NT) (refer to AT - 169)

OK

2	Check of transmission revolution sensor (NT) unit

(1) Disconnect the connector L5 of the transmission revolution sensor (NT).
(2) Check the transmission revolution sensor (NT) unit. (Refer to AT - 170)
(3) Connect the connector L5 of the transmission revolution sensor (NT).

NG → Replacement of transmission revolution sensor (NT) (refer to AT - 169)

AT

OK

3	Check wiring harness and connector (transmission control computer - transmission revolution sensor)

NOTE:
For the inspection procedure and precautions for wiring harnesses and connectors, refer to IN - 36.
(1) Disconnect the connector A19 of the transmission control computer ASSY.
(2) Disconnect the connector L5 of the transmission revolution sensor (NT).
(3) Measure the resistance between the terminals. (Refer to AT - 24for terminal arrangement of transmission control computer ASSY)

Resistance

Inspection terminals	Inspection conditions	Standard value
L5-2 (NT+) - A19-17 (NT+)	Always	Less than 1 Ω
L5-1 (NT-) - A19-28 (NT-)	Always	Less than 1 Ω
L5-2 (NT+) - chassis ground	Always	10 k Ωor more
L5-1 (NT-) - chassis ground	Always	10 k Ωor more

(4) Connect the connector A19 of the transmission control computer ASSY.
(5) Connect the connector L5 of the transmission revolution sensor (NT).

NG → Repair or replacement of wiring harness or connector

OK

4	Replacement of transmission control computer ASSY

(1) Replace the transmission control computer ASSY. (Refer to AT - 322)

Next

AT unit correction (refer to AT - 19)

DTC	P0717	Input/Turbine Speed Sensor "A" Circuit No Signal

Circuit description

The transmission revolution sensor (NT) inputs the input shaft revolution speed to the transmission control computer ASSY as a signal.

The transmission control computer ASSY performs shift timing control based on signals from transmission revolution sensor (NT) and transmission revolution sensor (SP2).

DTC No. SAE/TCCS	DTC detecting condition 1.Diagnosis condition 2.Abnormal condition 3.Abnormal period 4.Other	Inspection parts
P0717	1. Transmission 3 way solenoid ASSY (S1, S2, S3, S4, SR), transmission revolution sensor (SP2), shift position sensor, clutch control solenoid No.1 (SL1, SL2), and line pressure control solenoid ASSY (SLT) are normal. When driving in D position, the revolution speed of the transmission revolution sensor (NT) calculated from the transmission revolution sensor (SP2) is 550 r/min or more. (2.5 seconds or more passed after shifting to D position. However, when the oil temperature sensor is faulty and the oil temperature is 20°C or lower, 10 seconds or more passed after shifting to D position). 2. When the transmission revolution sensor (SP2) outputs 12 pulses, the transmission revolution sensor (NT) does not detect even 1 pulse. 3. Detected 500 times consecutively 4. 1 trips	• Transmission revolution sensor (NT) • Wiring harness or connector • Transmission control computer ASSY

Monitor description

This diagnostic code indicates whether pulse is not output from the transmission revolution sensor (NT) or the output is very small. The TCM transmission revolution sensor (NT) terminal detects revolution speed signals from the transmission revolution sensor (NT) (input r/min). TCM compares the transmission revolution sensor (NT) and transmission revolution sensor (SP2) and outputs shift signals.

If the output shaft speed is 550 r/min or more* while the vehicle is driving in D position, TCM detects a defect, turns on MIL, and records the diagnostic code.

*: Engine speed is 400 r/min or more.

MONITOR STRATEGY

Applicable diagnostic codes	P0717: Input/Turbine Speed Sensor "A" Circuit No Signal
Required sensor / component	Transmission revolution sensor (NT)

Operation frequency	Consecutive
Period	500 count
MIL operation	Immediate
Operation order	None

TYPICAL ENABLING CONDITIONS

Battery voltage	10.2 V or more
Engine speed	400 r/min or more
CAN bus OFF (U0073)	No defect
ECM without ID (U0100)	No defect
ECM communication counter (U0401)	No defect
Above condition is established	2 seconds or more
Fail safe mode (solenoid power supply shut down)	Non-active
Transmission revolution sensor (SP2) (P0722)	No defect
Neutral start switch ASSY (P0707, P0708)	No defect
Range position	D
Turbine speed calculated from vehicle speed	550 r/min or more
The transmission is out of shift control.	Yes
The transmission is out of gear shift control.	Yes
The transmission is out of diagnosis service control.	Yes
Clutch control solenoid No.1 (SL1) (P0961, P0962, P0963)	No defect
Clutch control solenoid No.1 (SL2) (P0965, P0966, P0967)	No defect
Line pressure control solenoid ASSY (SLT) (P2720, P2721, P2719)	No defect
Transmission 3 way solenoid ASSY (S1) (P0973, P0974)	No defect
Transmission 3 way solenoid ASSY (S2) (P0976, P0977)	No defect
Transmission 3 way solenoid ASSY (S3) (P0979, P0980)	No defect
Transmission 3 way solenoid ASSY (S4) (P0982, P0983)	No defect
Transmission 3 way solenoid ASSY (SR) (P0985, P0986)	No defect
Engine torque signal	No defect
Time elapsed after D range selection	10 seconds or more (When ATF temperature is 20 °C or more, and the ATF temperature sensor has no defects.)
	2.5 seconds or more (When ATF temperature is 20 °C or more, and the ATF temperature sensor has no defects.)

TYPICAL MALFUNCTION THRESHOLDS

Turbine shaft speed sensor pulse which is detecting vehicle speed sensor signal 12 pulses	0 pulses

AT

Circuit figure

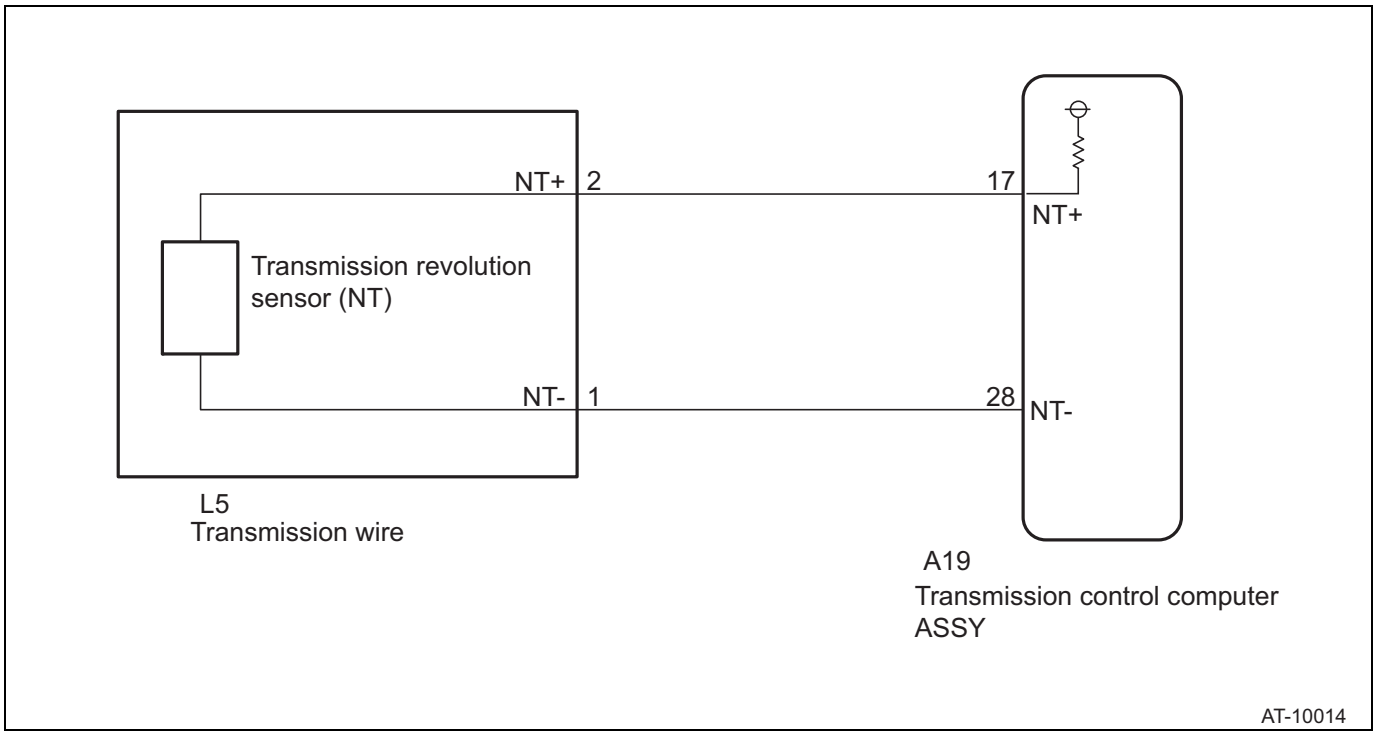

Inspection steps

NOTE:

Read the freeze frame data using the SSM4. A part of the engine running conditions under which the engine trouble occurred is recorded in the freeze frame data, which is useful for troubleshooting.

AT

1	Check of transmission revolution sensor (NT) installation condition

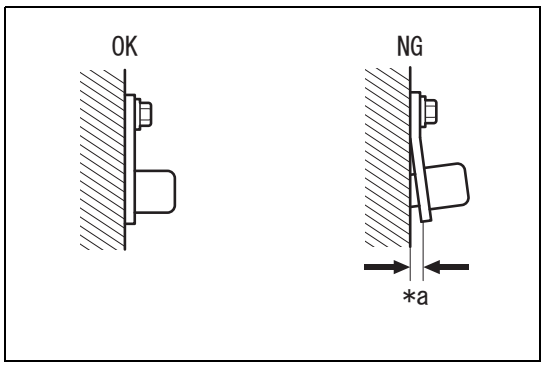

(1) Check the installation condition of the transmission revolution sensor (NT).

Criteria: The mounting bolt is not loosened and the sensor is not lifted or tilted.

Captions in illustration

*a	Clearance

NG → Repair of installation condition or replacement of transmission revolution sensor (NT) (refer to AT - 169)

OK

2	Check of transmission revolution sensor (NT) unit

(1) Disconnect the connector L5 of the transmission revolution sensor (NT).

(2) Check the transmission revolution sensor (NT) unit. (Refer to AT - 170)

(3) Connect the connector L5 of the transmission revolution sensor (NT).

NG → Replacement of transmission revolution sensor (NT) (refer to AT - 169)

OK

3	Check wiring harness and connector (transmission control computer - transmission revolution sensor)

NOTE:
For the inspection procedure and precautions for wiring harnesses and connectors, refer to IN - 36.

(1) Disconnect the connector A19 of the transmission control computer ASSY.
(2) Disconnect the connector L5 of the transmission revolution sensor (NT).
(3) Measure the resistance between the terminals. (Refer to AT - 24for terminal arrangement of transmission control computer ASSY)

Resistance

Inspection terminals	Inspection conditions	Standard value
L5-2 (NT+) - A19-17 (NT+)	Always	Less than 1 Ω
L5-1 (NT-) - A19-28 (NT-)	Always	Less than 1 Ω
L5-2 (NT+) - chassis ground	Always	10 k Ωor more
L5-1 (NT-) - chassis ground	Always	10 k Ωor more

(4) Connect the connector A19 of the transmission control computer ASSY.
(5) Connect the connector L5 of the transmission revolution sensor (NT).

NG → Repair or replacement of wiring harness or connector

OK

4	Replacement of transmission control computer ASSY

(1) Replace the transmission control computer ASSY. (Refer to AT - 322)

Next

AT unit correction (refer to AT - 19)

DTC	P0721	Output Shaft Speed Sensor Circuit Range/Performance

Circuit description
The transmission revolution sensor (SP2) inputs the output shaft revolution speed to the transmission control computer ASSY as a signal.
The transmission control computer ASSY performs shift timing control based on transmission revolution sensor (SP2) signal and transmission revolution sensor (NT) signal.

DTC No. SAE/TCCS	DTC detecting condition 1.Diagnosis condition 2.Abnormal condition 3.Abnormal period 4.Other	Inspection parts
P0721	1. Engine RPM remains at 400 rpm or higher for 2 seconds or more, and a ratio of the vehicle speed determined from turbine speed to VDC wheel speed is less than 5 %. 2.5 seconds or more passed after shifting to D position. However, when the oil temperature sensor is faulty and the oil temperature is 20°C or lower, 10 seconds or more passed after shifting to D position). 2. Ratio of vehicle speed determined from output revolution sensor to VDC wheel speed is more than 15 %. 3. 10 seconds 4. 1 trips	• Transmission revolution sensor (SP2) • Wiring harness or connector • Transmission control computer ASSY

Monitor description

Compare the vehicle speed determined from the transmission revolution sensor (SP2) and the VDC wheel speed to check if an abnormal signal is emitted from the transmission revolution sensor (SP2).

If a ratio of the vehicle speed determined from the transmission revolution sensor (SP2) to VDC wheel speed is more than 15 %, the TCM detects a defect, turns on MIL, and records the diagnostic code.

MONITOR STRATEGY

Applicable diagnostic codes	Output Speed Sensor Circuit Range/Performance
Required sensor / component	Transmission revolution sensor (SP2)
Operation frequency	Consecutive
Period	10 seconds
MIL operation	Immediate
Operation order	None

TYPICAL ENABLING CONDITIONS

Battery voltage	10.2 V or more
Engine speed	400 r/min or more
Above condition is established	2 seconds or more
Transmission range	D range
|1 - VDC wheel speed / Vehicle speed determined from turbine speed| ×100	Less than 5%
Time elapsed after D range selection	10 seconds or more (when ATF temperature is less than 20 °C or ATF temperature sensor has a defect.)
	2.5 seconds or more (ATF temperature is 20°C or more)
Fail safe mode (solenoid power supply shut down)	Non-active
CAN bus OFF (U0073)	No defect
No VDC ID (U0122)	No defect
VDC communication counter (U0416)	No defect
ABS vehicle speed	30 km/h or more
Current gear range	2nd speed or higher
Transmission revolution sensor (SP2) (P0721)	No defect
Neutral start switch ASSY (P0707, P0708)	No defect
Transmission 3 way solenoid ASSY (S1) (P0973, P0974)	No defect
Transmission 3 way solenoid ASSY (S2) (P0976, P0977)	No defect
Transmission 3 way solenoid ASSY (S3) (P0979, P0980)	No defect

Transmission 3 way solenoid ASSY (S4) (P0982, P0983)	No defect
Transmission 3 way solenoid ASSY (SR) (P0985, P0986)	No defect
Clutch control solenoid No.1 (SL1) (P0961, P0962, P0963)	No defect
Clutch control solenoid No.2 (SL2) (P0965, P0966, P0967)	No defect
Line pressure control solenoid ASSY (SLT) (P2719, P2720, P2721)	No defect
Transmission revolution sensor (NT) (P0717)	No defect
Engine torque signal	No defect

TYPICAL MALFUNCTION THRESHOLDS

|1 - VDC wheel speed / Vehicle speed| ×100	15% or more

Circuit figure

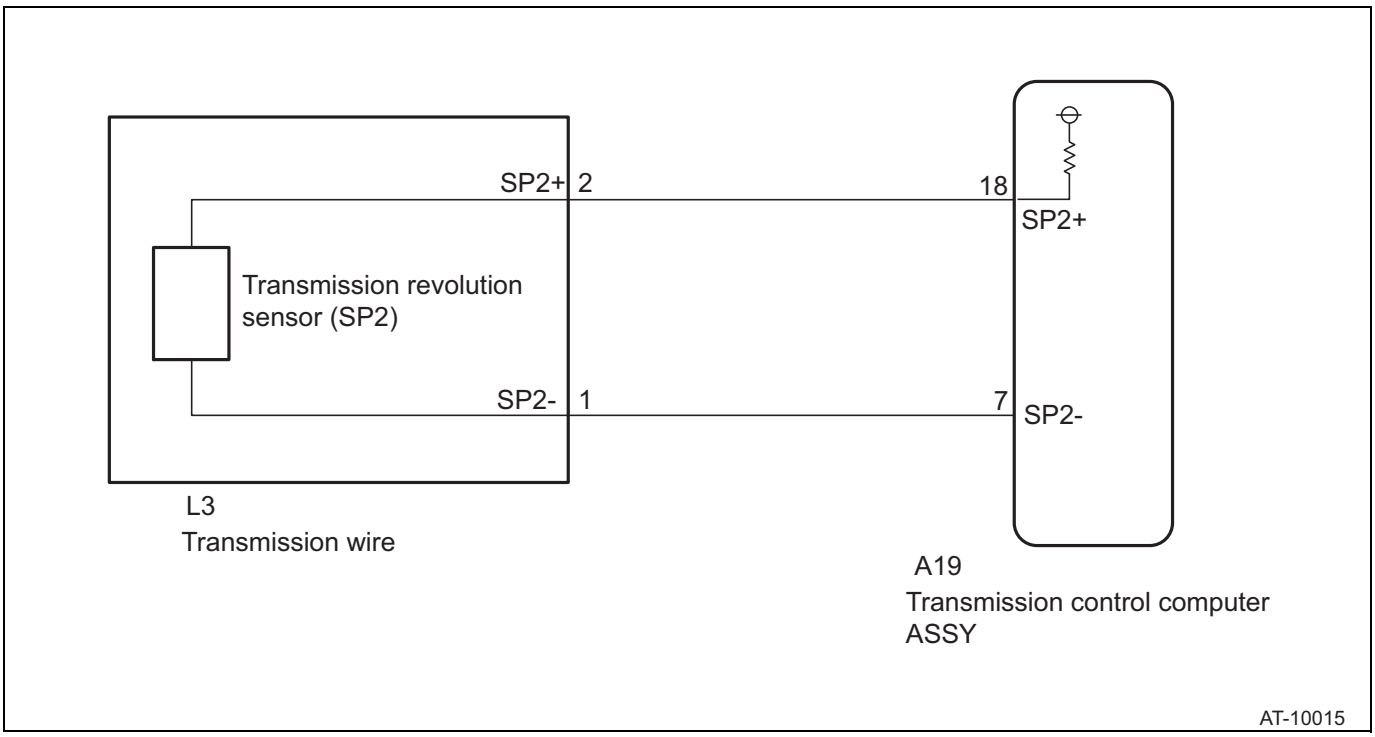

AT

Inspection steps

NOTE:

Read the freeze frame data using the SSM4. A part of the engine running conditions under which the engine trouble occurred is recorded in the freeze frame data, which is useful for troubleshooting.

1	Check of transmission revolution sensor (SP2) installation condition

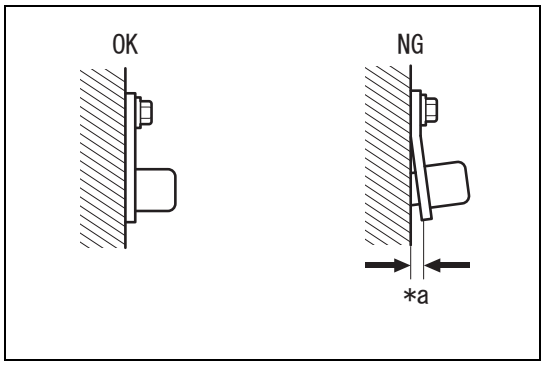

(1) Check the installation condition of the transmission revolution sensor (SP2).

Criteria: The mounting bolt is not loosened and the sensor is not lifted or tilted.

Captions in illustration

*a	Clearance

NG	Repair of installation condition or replacement of transmission revolution sensor (SP2) (refer to AT - 169)

OK

2	Check of transmission revolution sensor (SP2) unit

(1) Disconnect the connector L3 of the transmission revolution sensor (SP2).
(2) Check the transmission revolution sensor (SP2) unit. (Refer to AT - 170)
(3) Connect the connector L3 of the transmission revolution sensor (SP2).

NG → Replacement (SP2)of transmission revolution sensor (SP2) (refer to AT - 169)

OK

3	Check wiring harness and connector (transmission control computer ASSY - transmission revolution sensor (SP2))

NOTE:
For the inspection procedure and precautions for wiring harnesses and connectors, refer to IN - 36.
(1) Disconnect the connector A19 of the transmission control computer ASSY.
(2) Disconnect the connector L3 of the transmission revolution sensor (SP2).
(3) Measure the resistance between the terminals. (Refer to AT - 24for terminal arrangement of transmission control computer ASSY)

Resistance

Inspection terminals	Inspection conditions	Standard value
A19-18 (SP2+) - L3-2 (SP2+)	Always	Less than 1 Ω
A19-7 (SP2-) - L3-1 (SP2-)	Always	Less than 1 Ω
A19-18 (SP2+) - chassis ground	Always	10 k Ωor more
A19-7 (SP2-) - chassis ground	Always	10 k Ωor more

(4) Connect the connector L3 of the transmission revolution sensor (SP2).
(5) Connect the connector A19 of the transmission control computer ASSY.

NG → Repair or replacement of wiring harness or connector (transmission control computer ASSY - transmission revolution sensor)

OK

4	Replacement of transmission control computer ASSY

(1) Replace the transmission control computer ASSY. (Refer to AT - 322)

Next

AT unit correction (refer to AT - 19)

AT

DTC	P0722	Output Speed Sensor Circuit No Signal

Circuit description

The transmission revolution sensor (SP2) inputs the output shaft revolution speed to the transmission control computer ASSY as a signal.

The transmission control computer ASSY performs shift timing control based on transmission revolution sensor (SP2) signal and transmission revolution sensor (NT) signal.

DTC No. SAE/TCCS	DTC detecting condition 1.Diagnosis condition 2.Abnormal condition 3.Abnormal period 4.Other	Inspection parts
P0722	1. Transmission 3 way solenoid ASSY (S1, S2, S3, S4, SR), transmission revolution sensor (NT), shift position sensor, clutch control solenoid No.1 (SL1, SL2), and line pressure control solenoid ASSY (SLT) are normal. Driving at 6 km/h {4 MPH} or more in D position 1st gear, 9 km/h {6 MPH} or more in 2nd gear, 13 km/h {9 MPH} or more in 3rd gear, 18 km/h {12 MPH} or more in 4th gear, 25 km/h {16 MPH} or more in 5th gear, 30 km/h {19 MPH} or more in 6th gear (2.5 seconds or more passed after shifting to D position. However, when the oil temperature sensor is faulty and the oil temperature is 20°C or lower, 10 seconds or more passed after shifting to D position). 2. When the transmission revolution sensor (NT) outputs 12 pulses, the transmission revolution sensor (SP2) does not detect even 1 pulse. 3. Detected 500 times consecutively 4. 1 trips	• Transmission revolution sensor (SP2) • Wiring harness or connector • Transmission control computer ASSY

AT

Monitor description

This diagnostic code indicates whether pulse is not output from the transmission revolution sensor (SP2) or the output is very small. The TCM transmission revolution sensor (SP2) terminal detects revolution speed signals from the transmission revolution sensor (SP2). TCM compares the transmission revolution sensor (NT) and transmission revolution sensor (SP2) and outputs shift signals.

If the output shaft speed calculated from the transmission revolution sensor (NT) is 300 r/min or more* while the vehicle is driving in D position, TCM detects a defect, turns on MIL, and records the diagnostic code.

*: Engine speed is 400 r/min or more.

MONITOR STRATEGY

Applicable diagnostic codes	P0722: Output Speed Sensor Circuit No Signal
Required sensor / component	Transmission revolution sensor (SP2)
Operation frequency	Consecutive
Period	500 count
MIL operation	Immediate
Operation order	None

TYPICAL ENABLING CONDITIONS

Battery voltage	10.2 V or more
Engine speed	400 r/min or more
CAN bus OFF (U0073)	No defect
ECM without ID (U0100)	No defect
ECM communication counter (U0401)	No defect
Above condition is established	2 seconds or more

Fail safe mode (solenoid power supply shut down)	Non-active
Transmission revolution sensor (NT) (P0717)	No defect
Transmission revolution calculated from turbine shaft speed	300 r/min or more
Neutral start switch ASSY (P0707, P0708)	No defect
Range position	D
The transmission is out of shift control.	No
The transmission is out of gear shift control.	No
The transmission is out of diagnosis service control.	No
Clutch control solenoid No.1 (SL1) (P0961, P0962, P0963)	No defect
Clutch control solenoid No.1 (SL2) (P0965, P0966, P0967)	No defect
Line pressure control solenoid ASSY (SLT) (P2719, P2720, P2721)	No defect
Transmission 3 way solenoid ASSY (S1) (P0973, P0974)	No defect
Transmission 3 way solenoid ASSY (S2) (P0976, P0977)	No defect
Transmission 3 way solenoid ASSY (S3) (P0979, P0980)	No defect
Transmission 3 way solenoid ASSY (S4) (P0982, P0983)	No defect
Transmission 3 way solenoid ASSY (SR) (P0985, P0986)	No defect
Engine torque signal	No defect
Time elapsed after D range selection	10 seconds or more (When ATF temperature is 20 °C or less, and the ATF temperature sensor has a defect.)
	2.5 seconds or more (When ATF temperature is 20 °C or more, and the ATF temperature sensor has no defects.)

AT

TYPICAL MALFUNCTION THRESHOLDS

Vehicle speed sensor pulse which is detecting turbine shaft speed sensor signal 12 pulses	0 pulses

Circuit figure

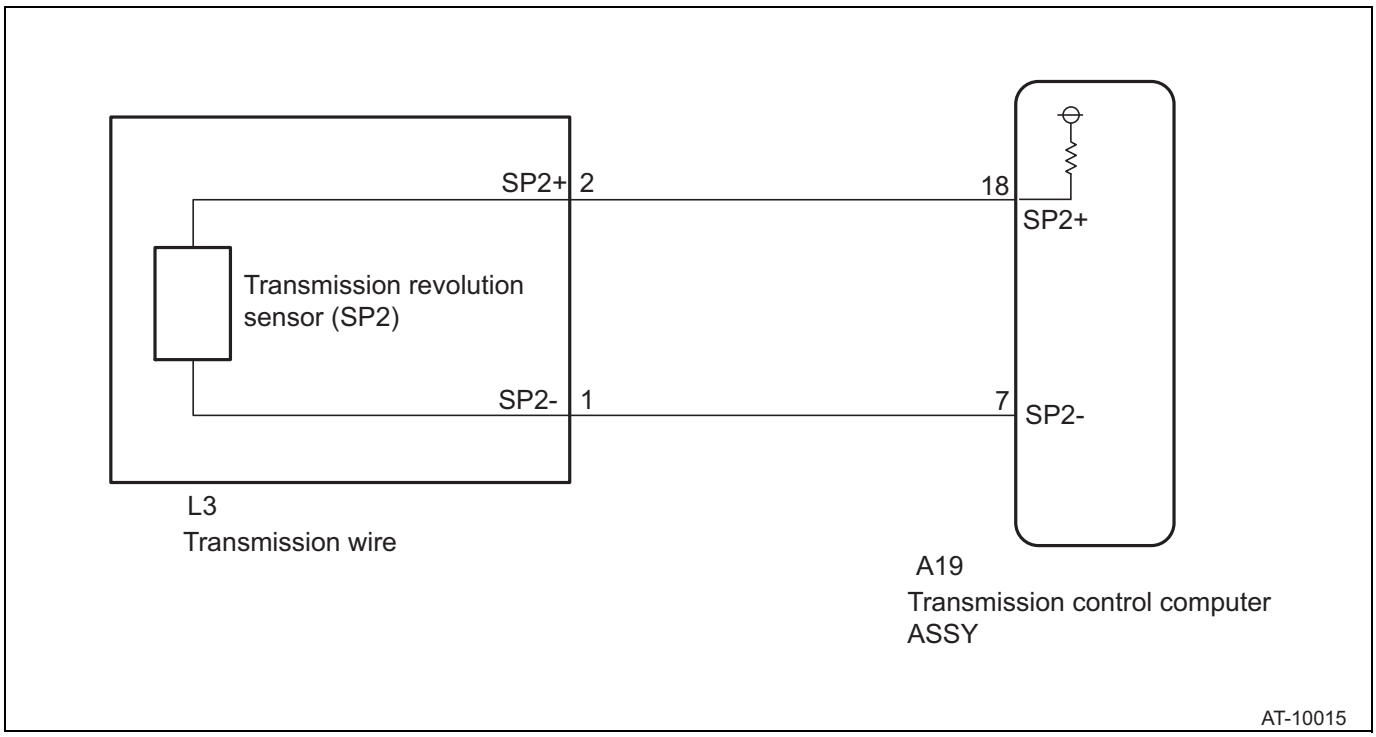

Inspection steps
NOTE:
Read the freeze frame data using the SSM4. A part of the engine running conditions under which the engine trouble occurred is recorded in the freeze frame data, which is useful for troubleshooting.

1	Check of transmission revolution sensor (SP2) installation condition

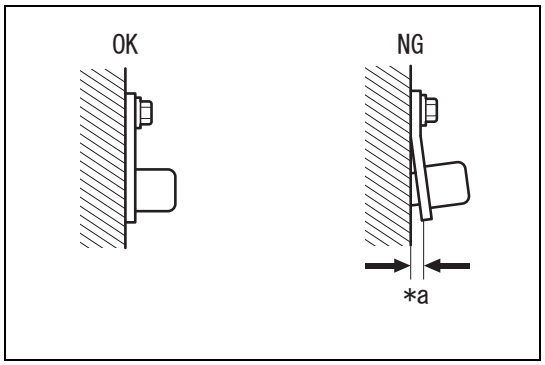

(1) Check the installation condition of the transmission revolution sensor (SP2).
Criteria: The mounting bolt is not loosened and the sensor is not lifted or tilted.

Captions in illustration

*a	Clearance

NG → Repair of installation condition or replacement of transmission revolution sensor (SP2) (refer to AT - 169)

OK

2	Check of transmission revolution sensor (SP2) unit

(1) Disconnect the connector L3 of the transmission revolution sensor (SP2).
(2) Check the transmission revolution sensor (SP2) unit. (Refer to AT - 170)
(3) Connect the connector L3 of the transmission revolution sensor (SP2).

NG → Replacement (SP2)of transmission revolution sensor (SP2) (refer to AT - 169)

OK

3	Check wiring harness and connector (transmission control computer ASSY - transmission revolution sensor (SP2))

NOTE:
For the inspection procedure and precautions for wiring harnesses and connectors, refer to IN - 36.
(1) Disconnect the connector A19 of the transmission control computer ASSY.
(2) Disconnect the connector L3 of the transmission revolution sensor (SP2).
(3) Measure the resistance between the terminals. (Refer to AT - 24for terminal arrangement of transmission control computer ASSY)

Resistance

Inspection terminals	Inspection conditions	Standard value
A19-18 (SP2+) - L3-2 (SP2+)	Always	Less than 1 Ω
A19-7 (SP2-) - L3-1 (SP2-)	Always	Less than 1 Ω
A19-18 (SP2+) - chassis ground	Always	10 k Ωor more

Inspection terminals	Inspection conditions	Standard value
A19-7 (SP2-) - chassis ground	Always	10 k Ωor more

(4) Connect the connector L3 of the transmission revolution sensor (SP2).
(5) Connect the connector A19 of the transmission control computer ASSY.

NG → Repair or replacement of wiring harness or connector (transmission control computer ASSY - transmission revolution sensor)

OK

4	Replacement of transmission control computer ASSY

(1) Replace the transmission control computer ASSY. (Refer to AT - 322)

Next

AT unit correction (refer to AT - 19)

DTC	P0729	Gear 6 Incorrect Ratio

AT

Circuit description
The transmission control computer ASSY detects the gear position based on signals from the transmission revolution sensor (NT) and the transmission revolution sensor (SP2). Then, the transmission control computer ASSY detects mechanical problems of related solenoid valve, valve body, or automatic transmission when the detected gear position differs from the commanded position.
Shift to 6th gear is prohibited as fail safe.

DTC NO. SAE/TCCS	DTC detecting condition 1.Diagnosis condition 2.Abnormal condition 3.Abnormal period 4.Other	Inspection parts
P0729	1. Driving in D position with ATF temperature at 20°C or higher and the coolant temperature at 40°C or higher (however, no malfunction is detected in transmission 3 way solenoid ASSY (S1, S2, S3, S4, SR), clutch control solenoid No.1 (SL1, SL2), line pressure control solenoid ASSY (SLT), transmission revolution sensor (NT, SP2), neutral start switch, CAN bus, engine ECM communication, engine coolant temperature sensor, air flow sensor, electronic throttle control, and accelerator pedal sensor). 2. All of the following conditions are established. When the transmission control computer ASSY commands 5th gear, the actual gear is also shifted to 5th position. When the transmission control computer ASSY commands 6th gear, the actual gear is shifted to 4th position. 3. - 4. 2 trips	• Line pressure control solenoid ASSY (SLT) • Transmission valve body ASSY

Monitor description
TCM switches ON/OFF of the shift solenoid valve and transmits oil pressure to the valve body to command gear shift. This diagnostic code indicates that the sequence valve is locked in the direction the spring extends and shift to 6th gear is impossible.

MONITOR STRATEGY

Applicable diagnostic codes	P0729: Gear 6 Incorrect Ratio
Required sensor / component	Sequence valve
Operation frequency	Consecutive
Period	1 count
MIL operation	2nd driving cycle
Operation order	None

TYPICAL ENABLING CONDITIONS

The following items are common to the all conditions below.

Battery voltage	10.5V or more
Engine speed	400 r/min or more
Fail safe mode (solenoid power supply shut down)	Non-active
Transmission revolution sensor (NT) (P0717)	No defect
Transmission revolution sensor (SP2) (P0722)	No defect
Transmission 3 way solenoid ASSY (S1) (P0973, P0974)	No defect
Transmission 3 way solenoid ASSY (S2) (P0976, P0977)	No defect
Transmission 3 way solenoid ASSY (S3) (P0979, P0980)	No defect
Transmission 3 way solenoid ASSY (S4) (P0982, P0983)	No defect
Transmission 3 way solenoid ASSY (SR) (P0985, P0986)	No defect
Clutch control solenoid No.1 (SL1) (P0961, P0962, P0963)	No defect
Clutch control solenoid No.1 (SL2) (P0965, P0966, P0967)	No defect
Line pressure control solenoid ASSY (SLT) (P2720, P2721, P2719)	No defect
Oil temperature sensor (P0711, P0712, P0713)	No defect
Neutral start switch ASSY (P0707, P0708)	No defect
CAN bus OFF (U0073)	No defect
ECM without ID (U0100)	No defect
ECM communication counter (U0401)	No defect
Coolant temperature sensor	No defect
Engine torque signal	No defect
Throttle opening angle sensor	No defect
Accelerator pedal opening angle sensor	No defect
Range position	D
Time elapsed after D range selection	4 seconds or more
Engine coolant temperature	40°C or more
ATF temperature	20°C or more

TYPICAL MALFUNCTION THRESHOLDS

Compare the target gear specified by TCM and the gear ratio calculated from turbine shaft speed and vehicle speed.

When both of the following conditions are established: condition (A) and (B)

Condition (A)

Shift position	D position
Target gear position	5th stage
Gear ratio calculated from turbine shaft speed and vehicle speed	5th stage

Condition (B)

Shift position	D position
Target gear position	6th stage

Gear ratio calculated from turbine shaft speed and vehicle speed	4th stage

When both of the following conditions are established: condition (C) and (D)

Condition (C)

Shift position	M position
Target gear position	5th stage
Gear ratio calculated from turbine shaft speed and vehicle speed	5th stage

Condition (D)

Shift position	M position
Target gear position	6th stage
Gear ratio calculated from turbine shaft speed and vehicle speed	4th stage

Gear positions when mechanical problems occur in reverse sequence valve

TCM shift command stage	1st	2nd	3rd	4th	5th	6th
Reverse sequence valve is stuck on the extended side.	1st	2nd	3rd	4th	5th	4th

Inspection steps

1	Read the diagnostic code

(1) Follow the SSM4 on-screen instructions to check the diagnostic codes. (Refer to AT - 17)

Result

Result	Go to
Only P0729 and P2714 are output.	A
P0729, P2714 and other diagnostic codes are output.	B

B → Progress to the relevant diagnosis code chart (Refer to AT - 11)

A

2	Shift position check

CAUTION:
- Perform the inspection at an oil temperature (60-90°C) in normal driving condition.
- Turn the A/C and the cruise control OFF.

(1) Drive in manual mode and check the shift position.
WARNING:
Confirm the safety on the road.

Gear position of transmission control computer ASSY	1st	2nd	3rd	4th	5th	6th
Gear positions when problems occur	1st	2nd	3rd	4th	5th	4th

Criteria: Shift position changes.

NG → Repair or replacement of transmission valve body ASSY (refer to AT - 176)

OK

3	Line pressure check

CAUTION:
- Wash the equipment and hoses with appropriate detergent before and after measurement.
- Always perform the inspection after the engine check and adjustment.
- Perform the inspection at an oil temperature (60 to 90°C) in normal driving condition.
- Perform the inspection with the A/C OFF.
- Do not perform the inspection continuously for 5 seconds or more at stall. (Time from the accelerator full close to full open, stall speed reading and the accelerator full close)
- After performing the stall test, be sure to cool down the engine for at least 1 minute with the select lever set in P or N position, and at an idle speed of 1200 r/min or less.
- If the stall speed is higher than the specified range, finish the stall test in as short a time as possible, in order to prevent the automatic transmission from being damaged.
- Perform the stall test in normal mode.

(1) Remove the under cover No.1.
(2) Remove the under cover No.2.
(3) Remove the exhaust pipe ASSY FR.
(4) Attach the SST on the transmission.
SST 18681AA040, 498897700, 498575400

CAUTION:
- Use 18681AA040 with genuine O-ring (17006AA000) attached.
- Route the hose so that it does not contact the exhaust pipe.

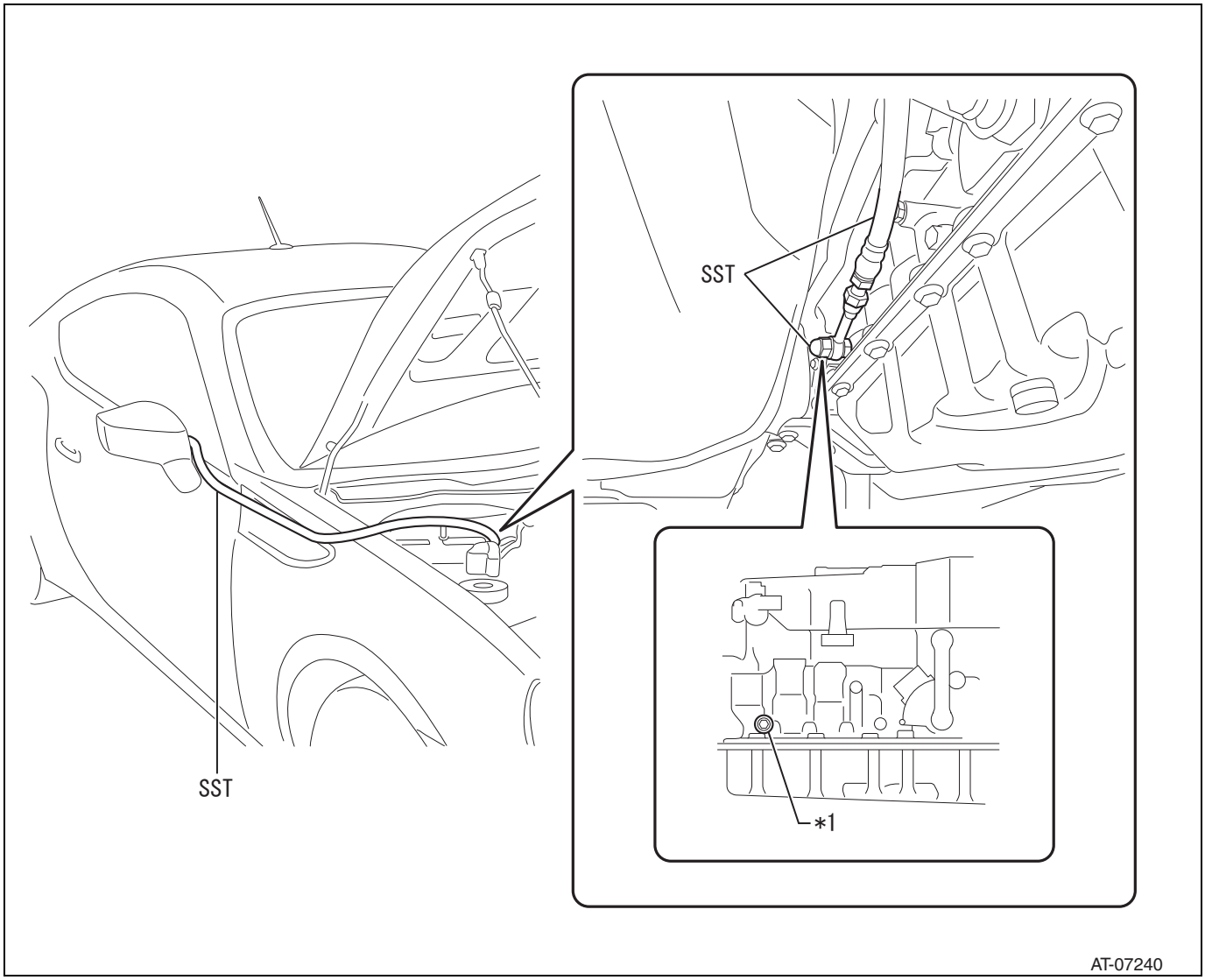

Captions in illustration

*1	Test plug

(5) Install the center exhaust pipe.
(6) Firmly apply the parking brake and set the wheel stoppers.
(7) Remove the test plug, install the gauge and start the engine.
(8) Firmly depress the brake pedal with left foot and shift to D or R position, then check the hydraulic pressure at idling and stalling.

Standard value

Shift position	While idling [MPa {kgf/cm^2}]	While stalling [MPa {kgf/cm^2}]
D position	0.35 to 0.43 {3.6 to 4.4}	1.20 to 1.38 {12.2 to 14.0}
R position	0.76 to 0.95 {7.7 to 9.7}	1.41 to 1.63 {14.4 to 16.6}

NOTE:
When there is an open or short circuit in the line pressure control solenoid ASSY (SLT) system, the line pressure reaches the maximum.

NG → Repair or replacement of transmission valve body ASSY (refer to AT - 176)

AT

OK

4	Diagnostic codes clear and driving test

(1) Follow the SSM4 on-screen instructions to clear the diagnostic codes. (Refer to AT - 17)
(2) Perform driving test.
WARNING:
Confirm the safety on the road.
(3) Follow the SSM4 on-screen instructions to check the diagnostic codes. (Refer to AT - 17)
Criteria: Diagnostic codes are not output.

NG → Repair or replacement of transmission valve body ASSY (refer to AT - 176)

OK

Complete

DTC	P0751	Shift Solenoid "A" Performance/Stuck Off
DTC	P0752	Shift Solenoid "A" Stuck On

AT

Circuit description
The transmission control computer ASSY detects the gear position based on signals from the transmission revolution sensor (NT) and the transmission revolution sensor (SP2). Then, the transmission control computer ASSY detects mechanical problems of related solenoid valve, valve body, or automatic transmission when the detected gear position differs from the commanded position.

DTC No. SAE/TCCS	DTC detecting condition 1.Diagnosis condition 2.Abnormal condition 3.Abnormal period 4.Other	Inspection parts
P0751	1. Driving in D position with ATF temperature at 20°C or higher and the coolant temperature at 40°C or higher (however, no malfunction is detected in transmission 3 way solenoid ASSY (S1, S2, S3, S4, SR), clutch control solenoid No.1 (SL1, SL2), line pressure control solenoid ASSY (SLT), transmission revolution sensor (NT, SP2), neutral start switch, CAN bus, engine ECM communication, engine coolant temperature sensor, air flow sensor, electronic throttle control, and accelerator pedal sensor). 2. All of the following conditions are established. When the transmission control computer ASSY commands 5th gear, the actual gear is also shifted to 5th position. When the transmission control computer ASSY commands 6th gear, engine overruns (neutral status). 3. - 4. 2 trips	• Transmission 3 way solenoid ASSY (S1) • Transmission wire • Wiring harness or connector • Transmission control computer ASSY

DTC No. SAE/TCCS	DTC detecting condition 1.Diagnosis condition 2.Abnormal condition 3.Abnormal period 4.Other	Inspection parts
P0752	1. Driving in D position with ATF temperature at 20°C or higher and the coolant temperature at 40°C or higher (however, no malfunction is detected in transmission 3 way solenoid ASSY (S1, S2, S3, S4, SR), clutch control solenoid No.1 (SL1, SL2), line pressure control solenoid ASSY (SLT), transmission revolution sensor (NT, SP2), neutral start switch, CAN bus, engine ECM communication, engine coolant temperature sensor, air flow sensor, electronic throttle control, and accelerator pedal sensor). 2. All of the following conditions are established. When the transmission control computer ASSY commands 1st gear, the actual gear is shifted to 2nd position. When the transmission control computer ASSY commands 5th gear, the actual gear is also shifted to 5th position. 3. - 4. 2 trips	• Transmission 3 way solenoid ASSY (S1) • Transmission wire • Wiring harness or connector • Transmission control computer ASSY

Monitor description

This diagnostic code indicates "stuck ON" or "stuck OFF" of the transmission 3 way solenoid ASSY (S1).

TCM switches ON/OFF of the shift solenoid valve to command shifting. If the gear position commanded by TCM is different from the actual gear position, TCM turns on MIL and records the diagnostic code.

MONITOR STRATEGY

Applicable diagnostic codes	P0751: Shift Solenoid "A" Performance/Stuck Off P0752: Shift Solenoid "A" Stuck On
Required sensor / component	Transmission 3 way solenoid ASSY (S1)
Operation frequency	Consecutive
Period	1 count
MIL operation	2nd driving cycle
Operation order	None

TYPICAL ENABLING CONDITIONS

The following items are common to the all conditions below.

Battery voltage	10.5V or more
Engine speed	400 r/min or more
Fail safe mode (solenoid power supply shut down)	Non-active
Transmission revolution sensor (NT) (P0717)	No defect
Transmission revolution sensor (SP2) (P0722)	No defect
Transmission 3 way solenoid ASSY (S1) (P0973, P0974)	No defect
Transmission 3 way solenoid ASSY (S2) (P0976, P0977)	No defect
Transmission 3 way solenoid ASSY (S3) (P0979, P0980)	No defect
Transmission 3 way solenoid ASSY (S4) (P0982, P0983)	No defect
Transmission 3 way solenoid ASSY (SR) (P0985, P0986)	No defect
Clutch control solenoid No.1 (SL1) (P0961, P0962, P0963)	No defect
Clutch control solenoid No.1 (SL2) (P0965, P0966, P0967)	No defect
Line pressure control solenoid ASSY (SLT) (P2720, P2721, P2719)	No defect
Oil temperature sensor (P0711, P0712, P0713)	No defect
Neutral start switch ASSY (P0707, P0708)	No defect

CAN bus OFF (U0073)	No defect
ECM without ID (U0100)	No defect
ECM communication counter (U0401)	No defect
Coolant temperature sensor	No defect
Engine torque signal	No defect
Throttle opening angle sensor	No defect
Accelerator pedal opening angle sensor	No defect
Range position	D
Time elapsed after D range selection	4 seconds or more
Engine coolant temperature	40°C or more
ATF temperature	20°C or more

TYPICAL MALFUNCTION THRESHOLDS

P0751: Shift solenoid "A" (performance/stuck OFF)

Compare the target gear specified by TCM and the gear ratio calculated from turbine shaft speed and vehicle speed.

When both of the following conditions are established: condition (A) and (B)

Condition (A)

Shift position	D position
Target gear position	5th stage
Gear ratio calculated from turbine shaft speed and vehicle speed	5th stage

Condition (B)

Shift position	D position
Target gear position	6th stage
Gear ratio calculated from turbine shaft speed and vehicle speed	Neutral

When both of the following conditions are established: condition (C) and (D)

Condition (C)

Shift position	M position
Target gear position	5th stage
Gear ratio calculated from turbine shaft speed and vehicle speed	5th stage

Condition (D)

Shift position	M position
Target gear position	6th stage
Gear ratio calculated from turbine shaft speed and vehicle speed	Neutral

P0752: Shift solenoid "A" (stuck ON)

Compare the target gear specified by TCM and the gear ratio calculated from turbine shaft speed and vehicle speed.

When both of the following conditions are established: condition (A) and (B)

Condition (A)

Shift position	D position
Target gear position	1st stage
Gear ratio calculated from turbine shaft speed and vehicle speed	2nd stage

Condition (B)

Shift position	D position
Target gear position	5th stage

AT

Gear ratio calculated from turbine shaft speed and vehicle speed	5th stage

When both of the following conditions are established: condition (C) and (D)

Condition (C)

Shift position	M position
Target gear position	1st stage
Gear ratio calculated from turbine shaft speed and vehicle speed	2nd stage

Condition (D)

Shift position	M position
Target gear position	5th stage
Gear ratio calculated from turbine shaft speed and vehicle speed	5th stage

Circuit figure

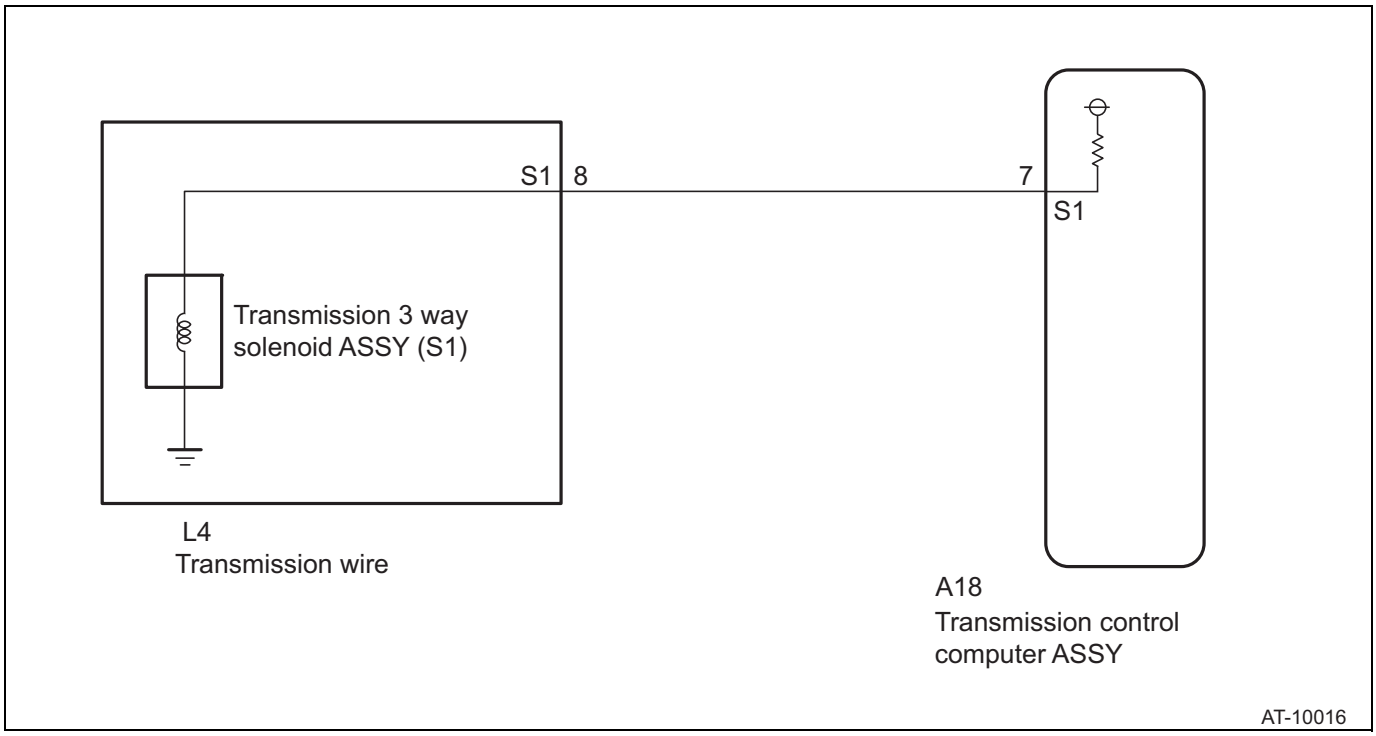

Inspection steps

NOTE:

Gear position when the transmission 3 way solenoid ASSY (S1) is stuck OFF (Select lever in M position)

TCM shift command stage	1st	2nd	3rd	4th	5th	6th
Gear position	1st	2nd	3rd	4th	5th	Neutral

Gear position when the transmission 3 way solenoid ASSY (S1) is stuck ON (Select lever in M position)

TCM shift command stage	1st	2nd	3rd	4th	5th	6th
Gear position	2nd	2nd	3rd	4th	5th	6th

1	Read the diagnostic code

(1) Follow the SSM4 on-screen instructions to check the diagnostic codes. (Refer to AT - 17)

Result

Result	Go to
P0751 and P2714, or P0752 and P0767 are output.	A
P0751 and P2714, or P0752, P0767, and other diagnostic codes are output.	B

B → Progress to the relevant diagnosis code chart (Refer to AT - 11)

A

2	Line pressure check

CAUTION:
- Wash the equipment and hoses with appropriate detergent before and after measurement.
- Always perform the inspection after the engine check and adjustment.
- Perform the inspection at an oil temperature (60 to 90°C) in normal driving condition.
- Perform the inspection with the A/C OFF.
- Do not perform the inspection continuously for 5 seconds or more at stall. (Time from the accelerator full close to full open, stall speed reading and the accelerator full close)
- After performing the stall test, be sure to cool down the engine for at least 1 minute with the select lever set in P or N position, and at an idle speed of 1200 r/min or less.
- If the stall speed is higher than the specified range, finish the stall test in as short a time as possible, in order to prevent the automatic transmission from being damaged.
- Perform the stall test in normal mode.

(1) Remove the under cover No.1.
(2) Remove the under cover No.2.
(3) Remove the exhaust pipe ASSY FR.
(4) Attach the SST on the transmission.
SST 18681AA040, 498897700, 498575400

CAUTION:
- Use 18681AA040 with genuine O-ring (17006AA000) attached.
- Route the hose so that it does not contact the exhaust pipe.

AT

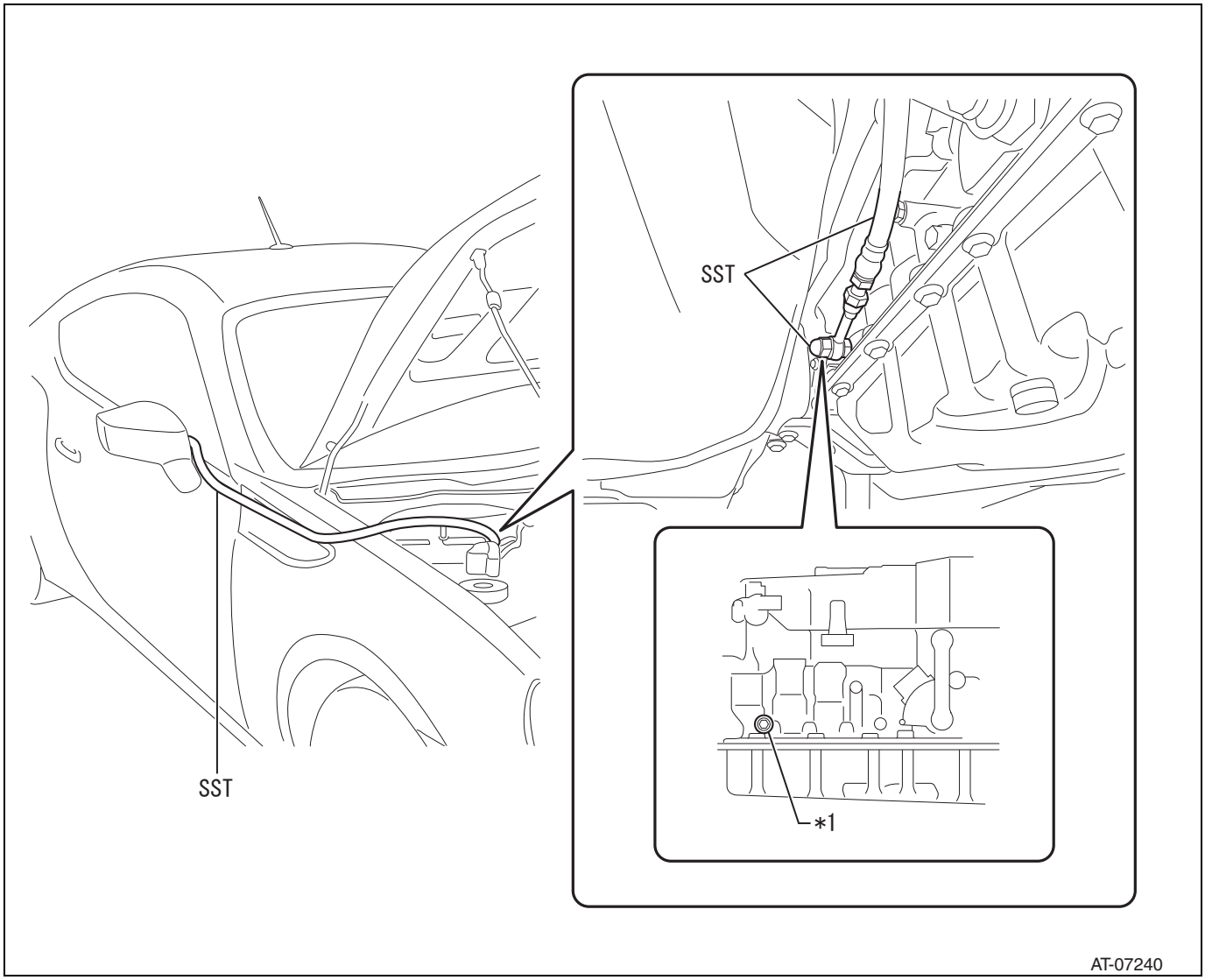

Captions in illustration

*1	Test plug

(5) Install the center exhaust pipe.
(6) Firmly apply the parking brake and set the wheel stoppers.
(7) Remove the test plug, install the gauge and start the engine.
(8) Firmly depress the brake pedal with left foot and shift to D or R position, then check the hydraulic pressure at idling and stalling.

Standard value

Shift position	While idling [MPa {kgf/cm^2}]	While stalling [MPa {kgf/cm^2}]
D position	0.35 to 0.43 {3.6 to 4.4}	1.20 to 1.38 {12.2 to 14.0}
R position	0.76 to 0.95 {7.7 to 9.7}	1.41 to 1.63 {14.4 to 16.6}

NOTE:
When there is an open or short circuit in the line pressure control solenoid ASSY (SLT) system, the line pressure reaches the maximum.

NG → Repair or replacement of transmission valve body ASSY (refer to AT - 176)

AT

OK

3	Check of transmission 3 way solenoid ASSY (S1) unit

(1) Remove the transmission 3 way solenoid ASSY (S1). (Refer to AT - 179)
(2) Check the transmission 3 way solenoid ASSY (S1) unit. (Refer to AT - 184)

NG → Replacement of the transmission 3 way solenoid ASSY (S1) (Refer to AT - 179)

OK

4	Check of transmission valve body ASSY unit

(1) Check the transmission valve body ASSY. (Refer to AT - 176)
Criteria: There is no malfunction and foreign objects on the solenoid installation portions.

NG → Repair or replacement of transmission valve body ASSY (refer to AT - 176)

OK

Repair or replacement of automatic transmission ASSY (refer to AT - 220)

AT

DTC	P0756	Shift Solenoid "B" Performance/Stuck Off

DTC	P0757	Shift Solenoid "B" Stuck On

Circuit description

The transmission control computer ASSY detects the gear position based on signals from the transmission revolution sensor (NT) and the transmission revolution sensor (SP2). Then, the transmission control computer ASSY detects mechanical problems of related solenoid valve, valve body, or automatic transmission when the detected gear position differs from the commanded position.

DTC No. SAE/TCCS	DTC detecting condition 1.Diagnosis condition 2.Abnormal condition 3.Abnormal period 4.Other	Inspection parts
P0756	1. Driving in D position with ATF temperature at 20°C or higher and the coolant temperature at 40°C or higher (however, no malfunction is detected in transmission 3 way solenoid ASSY (S1, S2, S3, S4, SR), clutch control solenoid No.1 (SL1, SL2), line pressure control solenoid ASSY (SLT), transmission revolution sensor (NT, SP2), neutral start switch, CAN bus, engine ECM communication, engine coolant temperature sensor, air flow sensor, electronic throttle control, and accelerator pedal sensor). 2. All of the following conditions are established. When the transmission control computer ASSY commands 1st gear, the actual gear is shifted to 3rd position. When the transmission control computer ASSY commands 6th gear, the actual gear is shifted to 5th position. 3. - 4. 2 trips	• Transmission 3 way solenoid ASSY (S2) • Transmission wire • Wiring harness or connector • Transmission control computer ASSY
P0757	1. Driving in D position with ATF temperature at 20°C or higher and the coolant temperature at 40°C or higher (however, no malfunction is detected in transmission 3 way solenoid ASSY (S1, S2, S3, S4, SR), clutch control solenoid No.1 (SL1, SL2), line pressure control solenoid ASSY (SLT), transmission revolution sensor (NT, SP2), neutral start switch, CAN bus, engine ECM communication, engine coolant temperature sensor, air flow sensor, electronic throttle control, and accelerator pedal sensor). 2. All of the following conditions are established. When the transmission control computer ASSY commands 5th gear, the actual gear is shifted to 6th position. When the transmission control computer ASSY commands 6th gear, the actual gear is shifted to 6th position. 3. - 4. 2 trips	• Transmission 3 way solenoid ASSY (S2) • Transmission wire • Wiring harness or connector • Transmission control computer ASSY

AT

Monitor description

This diagnostic code indicates "stuck ON" or "stuck OFF" of the transmission 3 way solenoid ASSY (S2).

TCM switches ON/OFF of the shift solenoid valve to command shifting. If the gear position commanded by TCM is different from the actual gear position, TCM turns on MIL and records the diagnostic code.

MONITOR STRATEGY

Applicable diagnostic codes	P0756: Shift Solenoid "B" Performance/Stuck Off P0757: Shift Solenoid "B" Stuck On
Required sensor / component	Transmission 3 way solenoid ASSY (S2)
Operation frequency	Consecutive
Period	1 count
MIL operation	2nd driving cycle
Operation order	None

TYPICAL ENABLING CONDITIONS

The following items are common to the all conditions below.

Battery voltage	10.5V or more
Engine speed	400 r/min or more
Fail safe mode (solenoid power supply shut down)	Non-active

Transmission revolution sensor (NT) (P0717)	No defect
Transmission revolution sensor (SP2) (P0722)	No defect
Transmission 3 way solenoid ASSY (S1) (P0973, P0974)	No defect
Transmission 3 way solenoid ASSY (S2) (P0976, P0977)	No defect
Transmission 3 way solenoid ASSY (S3) (P0979, P0980)	No defect
Transmission 3 way solenoid ASSY (S4) (P0982, P0983)	No defect
Transmission 3 way solenoid ASSY (SR) (P0985, P0986)	No defect
Clutch control solenoid No.1 (SL1) (P0961, P0962, P0963)	No defect
Clutch control solenoid No.1 (SL2) (P0965, P0966, P0967)	No defect
Line pressure control solenoid ASSY (SLT) (P2720, P2721, P2719)	No defect
Oil temperature sensor (P0711, P0712, P0713)	No defect
Neutral start switch ASSY (P0707, P0708)	No defect
CAN bus OFF (U0073)	No defect
ECM without ID (U0100)	No defect
ECM communication counter (U0401)	No defect
Coolant temperature sensor	No defect
Engine torque signal	No defect
Throttle opening angle sensor	No defect
Accelerator pedal opening angle sensor	No defect
Range position	D
Time elapsed after D range selection	4 seconds or more
Engine coolant temperature	40°C or more
ATF temperature	20°C or more

AT

TYPICAL MALFUNCTION THRESHOLDS

P0756: Shift solenoid "B" (performance/stuck OFF)

Compare the target gear specified by TCM and the gear ratio calculated from turbine shaft speed and vehicle speed.

When both of the following conditions are established: condition (A) and (B)

Condition (A)

Shift position	D position
Target gear position	1st stage
Gear ratio calculated from turbine shaft speed and vehicle speed	3rd stage

Condition (B)

Shift position	D position
Target gear position	6th stage
Gear ratio calculated from turbine shaft speed and vehicle speed	5th stage

When both of the following conditions are established: condition (C) and (D)

Condition (C)

Shift position	M position
Target gear position	1st stage
Gear ratio calculated from turbine shaft speed and vehicle speed	3rd stage

Condition (D)

Shift position	M position
Target gear position	6th stage

Gear ratio calculated from turbine shaft speed and vehicle speed	5th stage

P0757: Shift solenoid "B" (stuck ON)

Compare the target gear specified by TCM and the gear ratio calculated from turbine shaft speed and vehicle speed.

When both of the following conditions are established: condition (A) and (B)

Condition (A)

Shift position	D position
Target gear position	5th stage
Gear ratio calculated from turbine shaft speed and vehicle speed	6th stage

Condition (B)

Shift position	D position
Target gear position	6th stage
Gear ratio calculated from turbine shaft speed and vehicle speed	6th stage

When both of the following conditions are established: condition (C) and (D)

Condition (C)

Shift position	M position
Target gear position	5th stage
Gear ratio calculated from turbine shaft speed and vehicle speed	6th stage

Condition (D)

Shift position	M position
Target gear position	6th stage
Gear ratio calculated from turbine shaft speed and vehicle speed	6th stage

AT

Circuit figure

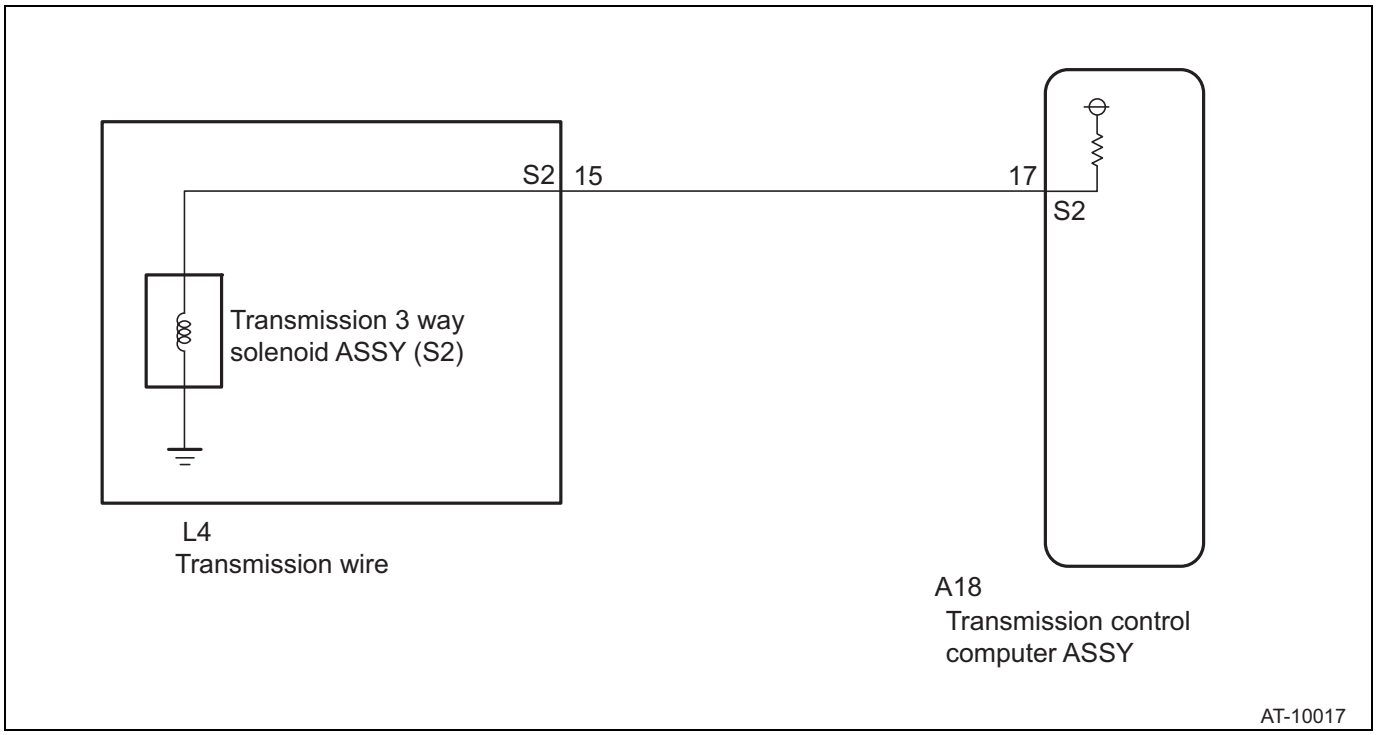

Inspection steps

NOTE:

Gear position when the transmission 3 way solenoid ASSY (S2) is stuck OFF (Select lever in M position)

TCM shift command stage	1st	2nd	3rd	4th	5th	6th
Gear position	3rd	3rd	3rd	4th	5th	5th

Gear position when the transmission 3 way solenoid ASSY (S2) is stuck ON (Select lever in M position)

TCM shift command stage	1st	2nd	3rd	4th	5th	6th
Gear position	1st	2nd	2nd	4th	6th	6th

1	Read the diagnostic code

(1) Follow the SSM4 on-screen instructions to check the diagnostic codes. (Refer to AT - 17)

Result

Result	Go to
P0756 and P2714, or P0757 is output.	A
P0756 and P2714, or P0757 and other diagnostic codes are output.	B

B → Related diagnostic code chart

A

AT

2	Line pressure check

CAUTION:

- Wash the equipment and hoses with appropriate detergent before and after measurement.
- Always perform the inspection after the engine check and adjustment.
- Perform the inspection at an oil temperature (60 to 90°C) in normal driving condition.
- Perform the inspection with the A/C OFF.
- Do not perform the inspection continuously for 5 seconds or more at stall. (Time from the accelerator full close to full open, stall speed reading and the accelerator full close)
- After performing the stall test, be sure to cool down the engine for at least 1 minute with the select lever set in P or N position, and at an idle speed of 1200 r/min or less.
- If the stall speed is higher than the specified range, finish the stall test in as short a time as possible, in order to prevent the automatic transmission from being damaged.
- Perform the stall test in normal mode.

(1) Remove the under cover No.1.

(2) Remove the under cover No.2.

(3) Remove the exhaust pipe ASSY FR.

(4) Attach the SST on the transmission.

SST 18681AA040, 498897700, 498575400

CAUTION:

- Use 18681AA040 with genuine O-ring (17006AA000) attached.
- Route the hose so that it does not contact the exhaust pipe.

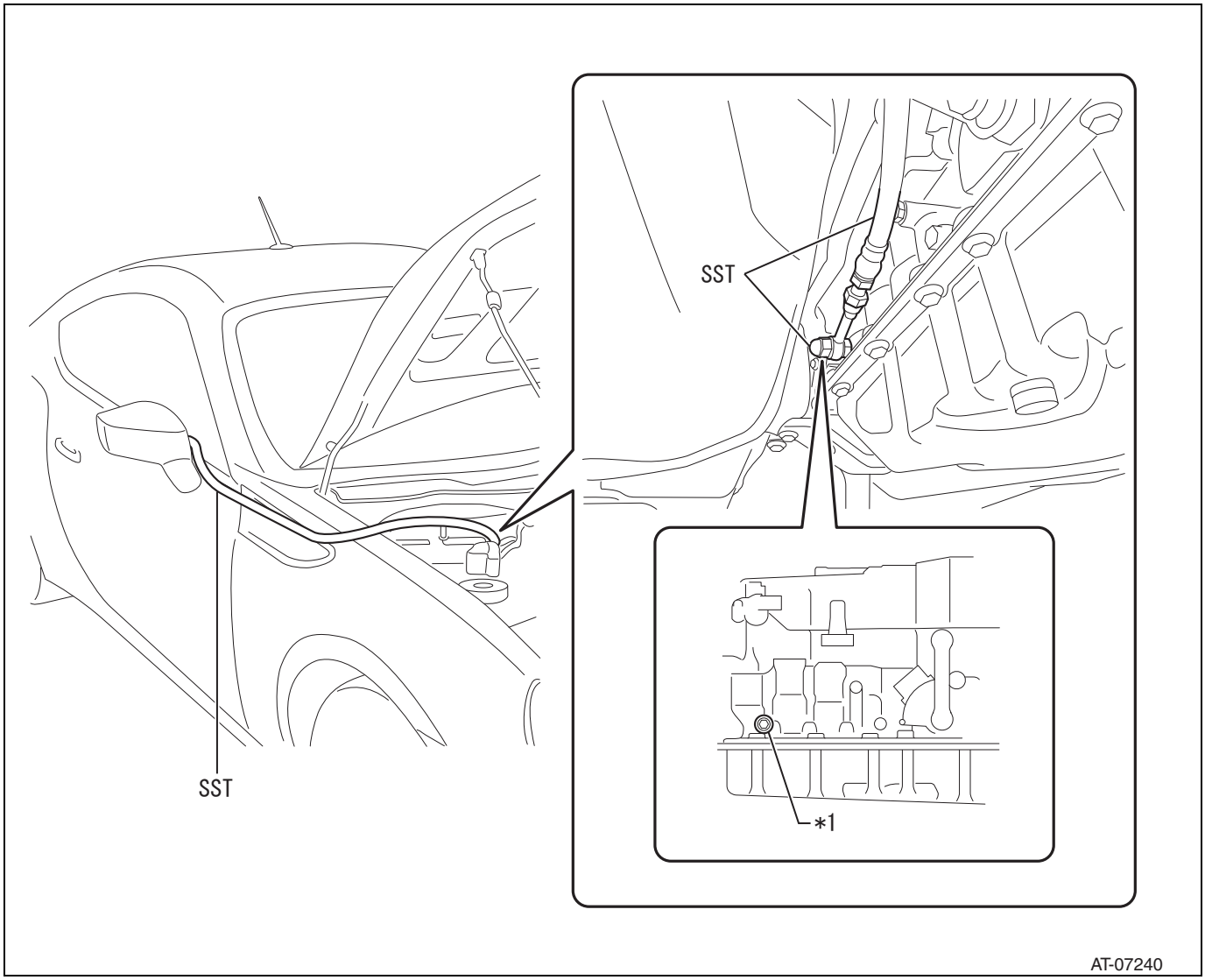

Captions in illustration

*1	Test plug

(5) Install the center exhaust pipe.
(6) Firmly apply the parking brake and set the wheel stoppers.
(7) Remove the test plug, install the gauge and start the engine.
(8) Firmly depress the brake pedal with left foot and shift to D or R position, then check the hydraulic pressure at idling and stalling.

Standard value

Shift position	While idling [MPa {kgf/cm^2}]	While stalling [MPa {kgf/cm^2}]
D position	0.35 to 0.43 {3.6 to 4.4}	1.20 to 1.38 {12.2 to 14.0}
R position	0.76 to 0.95 {7.7 to 9.7}	1.41 to 1.63 {14.4 to 16.6}

NOTE:
When there is an open or short circuit in the line pressure control solenoid ASSY (SLT) system, the line pressure reaches the maximum.

NG → Repair or replacement of transmission valve body ASSY (refer to AT - 176)

AT

OK

3	Check of transmission 3 way solenoid ASSY (S2) unit

(1) Remove the transmission 3 way solenoid ASSY (S2). (Refer to AT - 179)
(2) Check the transmission 3 way solenoid ASSY (S2) unit. (Refer to AT - 185)

NG → Replacement of the transmission 3 way solenoid ASSY (S2) (Refer to AT - 179)

OK

4	Check of transmission valve body ASSY unit

(1) Check the transmission valve body ASSY. (Refer to AT - 176)
Criteria: There is no malfunction and foreign objects on the solenoid installation portions.

NG → Repair or replacement of transmission valve body ASSY (refer to AT - 176)

OK

Repair or replacement of automatic transmission ASSY (refer to AT - 220)

AT

DTC	P0761	Shift Solenoid "C" Performance/Stuck Off
DTC	P0762	Shift Solenoid "C" Stuck On
DTC	P0781	1-2 Shift

Circuit description

The transmission control computer ASSY detects the gear position based on signals from the transmission revolution sensor (NT) and the transmission revolution sensor (SP2). Then, the transmission control computer ASSY detects mechanical problems of related solenoid valve, valve body, or automatic transmission when the detected gear position differs from the commanded position.

DTC No. SAE/TCCS	DTC detecting condition 1.Diagnosis condition 2.Abnormal condition 3.Abnormal period 4.Other	Inspection parts
P0761	1. Driving in D position with ATF temperature at 20°C or higher and the coolant temperature at 40°C or higher (however, no malfunction is detected in transmission 3 way solenoid ASSY (S1, S2, S3, S4, SR), clutch control solenoid No.1 (SL1, SL2), line pressure control solenoid ASSY (SLT), transmission revolution sensor (NT, SP2), neutral start switch, CAN bus, engine ECM communication, engine coolant temperature sensor, air flow sensor, electronic throttle control, and accelerator pedal sensor). 2. Any of the following conditions is established. (a) All of the following conditions are established. When the transmission control computer ASSY commands 1st gear, the actual gear is shifted to 3rd position. When the transmission control computer ASSY commands 6th gear, the actual gear is shifted to 6th position. (b) All of the following conditions are established. When the transmission control computer ASSY commands 2nd gear, the actual gear is shifted to 6th position. When the transmission control computer ASSY commands 3rd gear, the actual gear is shifted to 4th position. 3. - 4. 2 trips	• Transmission 3 way solenoid ASSY (S3) • Transmission wire • Wiring harness or connector • Transmission control computer ASSY
P0762	1. Driving in D position with ATF temperature at 20°C or higher and the coolant temperature at 40°C or higher (however, no malfunction is detected in transmission 3 way solenoid ASSY (S1, S2, S3, S4, SR), clutch control solenoid No.1 (SL1, SL2), line pressure control solenoid ASSY (SLT), transmission revolution sensor (NT, SP2), neutral start switch, CAN bus, engine ECM communication, engine coolant temperature sensor, air flow sensor, electronic throttle control, and accelerator pedal sensor). 2. Any of the following conditions is established. When the transmission control computer ASSY commands 4th gear, the actual gear is shifted to 3rd position. When the transmission control computer ASSY commands 5th gear, the actual gear is shifted to neutral. 3. - 4. 2 trips	• Transmission 3 way solenoid ASSY (S3) • Transmission wire • Wiring harness or connector • Transmission control computer ASSY
P0781	1. Driving in D position with ATF temperature at 20°C or higher and the coolant temperature at 40°C or higher (however, no malfunction is detected in transmission 3 way solenoid ASSY (S1, S2, S3, S4, SR), clutch control solenoid No.1 (SL1, SL2), line pressure control solenoid ASSY (SLT), transmission revolution sensor (NT, SP2), neutral start switch, CAN bus, engine ECM communication, engine coolant temperature sensor, air flow sensor, electronic throttle control, and accelerator pedal sensor). 2. Any of the following conditions is established. When the transmission control computer ASSY commands 4th gear, the actual gear is shifted to 3rd position. When the transmission control computer ASSY commands 5th gear, the actual gear is shifted to neutral. 3. - 4. 2 trips	• Transmission 3 way solenoid ASSY (S3) • Transmission wire • Wiring harness or connector • Transmission control computer ASSY

AT

Monitor description

This diagnostic code indicates "stuck ON" or "stuck OFF" of the transmission 3 way solenoid ASSY (S3).

TCM switches ON/OFF of the shift solenoid valve to command shifting. If the gear position commanded by TCM is different from the actual gear position, TCM turns on MIL and records the diagnostic code.

MONITOR STRATEGY

Applicable diagnostic codes	P0761: Shift Solenoid "C" Performance/Stuck Off P0762: Shift Solenoid "C" Stuck On P0781: 1-2 Shift
Required sensor / component	Transmission 3 way solenoid ASSY (S3)
Operation frequency	Consecutive
Period	1 count
MIL operation	2nd driving cycle
Operation order	None

TYPICAL ENABLING CONDITIONS

Battery voltage	10.5V or more
Engine speed	400 r/min or more
Fail safe mode (solenoid power supply shut down)	Non-active
Transmission revolution sensor (NT) (P0717)	No defect
Transmission revolution sensor (SP2) (P0722)	No defect
Transmission 3 way solenoid ASSY (S1) (P0973, P0974)	No defect
Transmission 3 way solenoid ASSY (S2) (P0976, P0977)	No defect
Transmission 3 way solenoid ASSY (S3) (P0979, P0980)	No defect
Transmission 3 way solenoid ASSY (S4) (P0982, P0983)	No defect
Transmission 3 way solenoid ASSY (SR) (P0985, P0986)	No defect
Clutch control solenoid No.1 (SL1) (P0961, P0962, P0963)	No defect
Clutch control solenoid No.1 (SL2) (P0965, P0966, P0967)	No defect
Line pressure control solenoid ASSY (SLT) (P2720, P2721, P2719)	No defect
Oil temperature sensor (P0711, P0712, P0713)	No defect
Neutral start switch ASSY (P0707, P0708)	No defect
CAN bus OFF (U0073)	No defect
ECM without ID (U0100)	No defect
ECM communication counter (U0401)	No defect
Coolant temperature sensor	No defect
Engine torque signal	No defect
Throttle opening angle sensor	No defect
Accelerator pedal opening angle sensor	No defect
Range position	D
Time elapsed after D range selection	4 seconds or more
Engine coolant temperature	40°C or more
ATF temperature	20°C or more

TYPICAL MALFUNCTION THRESHOLDS

P0761: Shift Solenoid "C" Performance/Stuck Off

Compare the target gear specified by TCM and the gear ratio calculated from turbine shaft speed and vehicle speed.

When both of the following conditions are established: condition (A) and (B)

Condition (A)

Shift position	D position
Target gear position	1st stage

Gear ratio calculated from turbine shaft speed and vehicle speed	3rd stage

Condition (B)

Shift position	D position
Target gear position	6th stage
Gear ratio calculated from turbine shaft speed and vehicle speed	6th stage

When both of the following conditions are established: condition (C) and (D)

Condition (C)

Shift position	D position
Target gear position	2nd stage
Gear ratio calculated from turbine shaft speed and vehicle speed	6th stage

Condition (D)

Shift position	D position
Target gear position	3rd stage
Gear ratio calculated from turbine shaft speed and vehicle speed	4th stage

When both of the following conditions are established: condition (E) and (F)

Condition (E)

Shift position	M position
Target gear position	2nd stage
Gear ratio calculated from turbine shaft speed and vehicle speed	6th stage

Condition (F)

Shift position	M position
Target gear position	3rd stage
Gear ratio calculated from turbine shaft speed and vehicle speed	4th stage

P0762: Shift solenoid "C" (stuck ON)

Compare the target gear specified by TCM and the gear ratio calculated from turbine shaft speed and vehicle speed.

When both of the following conditions are established: condition (A) and (B)

Condition (A)

Shift position	D position
Target gear position	4th stage
Gear ratio calculated from turbine shaft speed and vehicle speed	3rd stage

Condition (B)

Shift position	D position
Target gear position	5th stage
Gear ratio calculated from turbine shaft speed and vehicle speed	Neutral

When both of the following conditions are established: condition (C) or (D)

Condition (C)

Shift position	M position
Target gear position	4th stage
Gear ratio calculated from turbine shaft speed and vehicle speed	3rd stage

Condition (D)

Shift position	M position
Target gear position	5th stage
Gear ratio calculated from turbine shaft speed and vehicle speed	Neutral

P0781: 1-2 Shift

Compare the target gear specified by TCM and the gear ratio calculated from turbine shaft speed and vehicle speed.

When both of the following conditions are established: condition (A) and (B)

Condition (A)

Shift position	D position
Target gear position	4th stage
Gear ratio calculated from turbine shaft speed and vehicle speed	3rd stage

Condition (B)

Shift position	D position
Target gear position	5th stage
Gear ratio calculated from turbine shaft speed and vehicle speed	Neutral

When both of the following conditions are established: condition (C) or (D)

Condition (C)

Shift position	M position
Target gear position	4th stage
Gear ratio calculated from turbine shaft speed and vehicle speed	3rd stage

AT

Condition (D)

Shift position	M position
Target gear position	5th stage
Gear ratio calculated from turbine shaft speed and vehicle speed	Neutral

Circuit figure

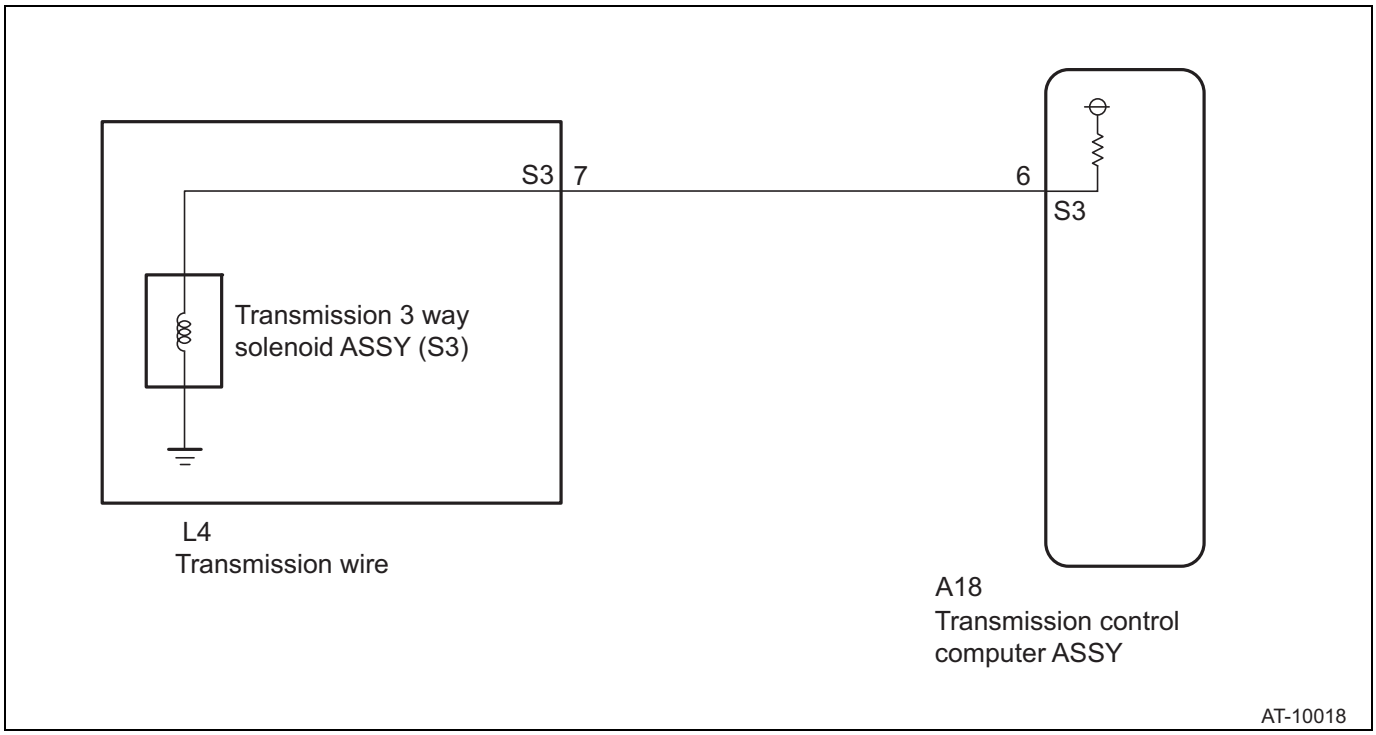

Inspection steps

NOTE:

Gear position when the transmission 3 way solenoid ASSY (S3) is stuck OFF (Select lever in M position)

TCM shift command stage	1st	2nd	3rd	4th	5th	6th
Gear position	3rd	6th	4th	4th	5th	6th

Gear position when the transmission 3 way solenoid ASSY (S3) is stuck ON (Select lever in M position)
Gear position when the 1-2 shift valve spring is compressed (Select lever in M position)

TCM shift command stage	1st	2nd	3rd	4th	5th	6th
Gear position	1st	2nd	3rd	3rd	Neutral	Neutral

1	Read the diagnostic code

(1) Follow the SSM4 on-screen instructions to check the diagnostic codes. (Refer to AT - 17)

Result

Result	Go to
Only P0761 is output, or only P0762, P0781, and P2714 are output.	A
Only P0761 is output, or P0762, P0781, P2714 and other diagnostic codes are output.	B

B → Related diagnostic code chart

A

2	Line pressure check

CAUTION:

- Wash the equipment and hoses with appropriate detergent before and after measurement.

- Always perform the inspection after the engine check and adjustment.
- Perform the inspection at an oil temperature (60 to 90°C) in normal driving condition.
- Perform the inspection with the A/C OFF.
- Do not perform the inspection continuously for 5 seconds or more at stall. (Time from the accelerator full close to full open, stall speed reading and the accelerator full close)
- After performing the stall test, be sure to cool down the engine for at least 1 minute with the select lever set in P or N position, and at an idle speed of 1200 r/min or less.
- If the stall speed is higher than the specified range, finish the stall test in as short a time as possible, in order to prevent the automatic transmission from being damaged.
- Perform the stall test in normal mode.

(1) Remove the under cover No.1.
(2) Remove the under cover No.2.
(3) Remove the exhaust pipe ASSY FR.
(4) Attach the SST on the transmission.
SST 18681AA040, 498897700, 498575400

CAUTION:
- Use 18681AA040 with genuine O-ring (17006AA000) attached.
- Route the hose so that it does not contact the exhaust pipe.

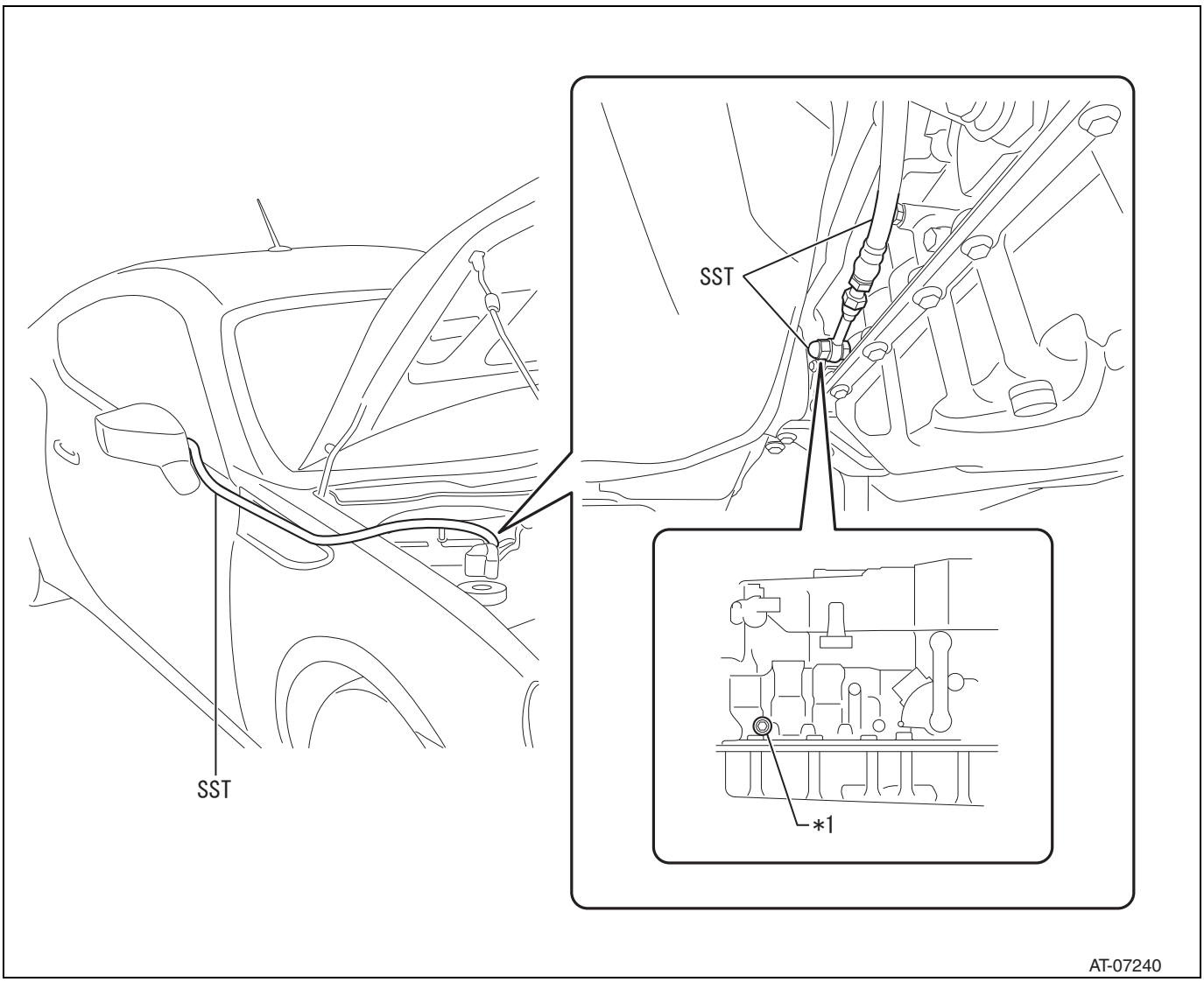

Captions in illustration

*1	Test plug

(5) Install the center exhaust pipe.
(6) Firmly apply the parking brake and set the wheel stoppers.
(7) Remove the test plug, install the gauge and start the engine.
(8) Firmly depress the brake pedal with left foot and shift to D or R position, then check the hydraulic pressure at idling and stalling.

Standard value

Shift position	While idling [MPa {kgf/cm^2}]	While stalling [MPa {kgf/cm^2}]
D position	0.35 to 0.43 {3.6 to 4.4}	1.20 to 1.38 {12.2 to 14.0}
R position	0.76 to 0.95 {7.7 to 9.7}	1.41 to 1.63 {14.4 to 16.6}

NOTE:
When there is an open or short circuit in the line pressure control solenoid ASSY (SLT) system, the line pressure reaches the maximum.

NG → Repair or replacement of transmission valve body ASSY (refer to AT - 176)

OK

3 Check of transmission 3 way solenoid ASSY (S3) unit

(1) Remove the transmission 3 way solenoid ASSY (S3). (Refer to AT - 180)
(2) Check the transmission 3 way solenoid ASSY (S3) unit. (Refer to AT - 185)

NG → Replacement of the transmission 3 way solenoid ASSY (S3) (Refer to AT - 180)

OK

4 Check of transmission valve body ASSY unit

(1) Check the transmission valve body ASSY. (Refer to AT - 176)
Criteria: There is no malfunction and foreign objects on the solenoid installation portions.

NG → Repair or replacement of transmission valve body ASSY (refer to AT - 176)

OK

Repair or replacement of automatic transmission ASSY (refer to AT - 220)

AT

DTC	P0766	Shift Solenoid "D" Performance/Stuck Off

DTC	P0767	Shift Solenoid "D" Stuck On

DTC	P0776	Pressure Control Solenoid "B" Performance/Stuck Off

Circuit description

The transmission control computer ASSY detects the gear position based on signals from the transmission revolution sensor (NT) and the transmission revolution sensor (SP2). Then, the transmission control computer ASSY detects mechanical problems of related solenoid valve, valve body, or automatic transmission when the detected gear position differs from the commanded position.

DTC No. SAE/TCCS	DTC detecting condition 1.Diagnosis condition 2.Abnormal condition 3.Abnormal period 4.Other	Inspection parts
P0766	1. Driving in D position with ATF temperature at 20°C or higher and the coolant temperature at 40°C or higher (however, no malfunction is detected in transmission 3 way solenoid ASSY (S1, S2, S3, S4, SR), clutch control solenoid No.1 (SL1, SL2), line pressure control solenoid ASSY (SLT), transmission revolution sensor (NT, SP2), neutral start switch, CAN bus, engine ECM communication, engine coolant temperature sensor, air flow sensor, electronic throttle control, and accelerator pedal sensor). 2. All of the following conditions are established. When the transmission control computer ASSY commands 5th gear, the actual gear is shifted to 4th position. When the transmission control computer ASSY commands 6th gear, the actual gear is shifted to 4th position. 3. - 4. 2 trips	• Transmission 3 way solenoid ASSY (S4) • Clutch control solenoid No.1 (SL2) • Transmission wire • Wiring harness or connector • Transmission control computer ASSY
P0767	1. Driving in D position with ATF temperature at 20°C or higher and the coolant temperature at 40°C or higher (however, no malfunction is detected in transmission 3 way solenoid ASSY (S1, S2, S3, S4, SR), clutch control solenoid No.1 (SL1, SL2), line pressure control solenoid ASSY (SLT), transmission revolution sensor (NT, SP2), neutral start switch, CAN bus, engine ECM communication, engine coolant temperature sensor, air flow sensor, electronic throttle control, and accelerator pedal sensor). 2. All of the following conditions are established. When the transmission control computer ASSY commands 1st gear during driving in M mode, the actual gear is shifted to 2nd position. When the transmission control computer ASSY commands 5th gear during driving in M mode, the actual gear is also shifted to 5th position. 3. - 4. 2 trips	• Transmission 3 way solenoid ASSY (S4) • Clutch control solenoid No.1 (SL2) • Transmission wire • Wiring harness or connector • Transmission control computer ASSY

AT

DTC No. SAE/TCCS	DTC detecting condition 1.Diagnosis condition 2.Abnormal condition 3.Abnormal period 4.Other	Inspection parts
P0776	1. Driving in D position with ATF temperature at 20°C or higher and the coolant temperature at 40°C or higher (however, no malfunction is detected in transmission 3 way solenoid ASSY (S1, S2, S3, S4, SR), clutch control solenoid No.1 (SL1, SL2), line pressure control solenoid ASSY (SLT), transmission revolution sensor (NT, SP2), neutral start switch, CAN bus, engine ECM communication, engine coolant temperature sensor, air flow sensor, electronic throttle control, and accelerator pedal sensor). 2. All of the following conditions are established. When the transmission control computer ASSY commands 5th gear, the actual gear is shifted to 4th position. When the transmission control computer ASSY commands 6th gear, the actual gear is shifted to 4th position. 3. - 4. 2 trips	• Transmission 3 way solenoid ASSY (S4) • Clutch control solenoid No.1 (SL2) • Transmission wire • Wiring harness or connector • Transmission control computer ASSY

Monitor description

This diagnostic code indicates "stuck OFF" of the transmission 3 way solenoid ASSY (S4), "stuck ON" of the clutch control solenoid No.1 (SL2), or a defect of the brake control valve. TCM switches ON/OFF of the shift solenoid valve to command shifting. If the gear position commanded by TCM is different from the actual gear position, TCM turns on MIL and records the diagnostic code.

MONITOR STRATEGY

AT

Applicable diagnostic codes	P0766: Shift Solenoid "D" Performance/Stuck Off P0767: Shift Solenoid "D" Stuck On P0776: Pressure Control Solenoid "B" Performance/Stuck Off
Required sensor / component	Transmission 3 way solenoid ASSY (S4) Clutch control solenoid No.1 (SL2)
Operation frequency	Consecutive
Period	1 count
MIL operation	2nd driving cycle
Operation order	None

TYPICAL ENABLING CONDITIONS

The following items are common to the all conditions below.

Battery voltage	10.5V or more
Engine speed	400 r/min or more
Fail safe mode (solenoid power supply shut down)	Non-active
Transmission revolution sensor (NT) (P0717)	No defect
Transmission revolution sensor (SP2) (P0722)	No defect
Transmission 3 way solenoid ASSY (S1) (P0973, P0974)	No defect
Transmission 3 way solenoid ASSY (S2) (P0976, P0977)	No defect
Transmission 3 way solenoid ASSY (S3) (P0979, P0980)	No defect
Transmission 3 way solenoid ASSY (S4) (P0982, P0983)	No defect
Transmission 3 way solenoid ASSY (SR) (P0985, P0986)	No defect
Clutch control solenoid No.1 (SL1) (P0961, P0962, P0963)	No defect
Clutch control solenoid No.1 (SL2) (P0965, P0966, P0967)	No defect

Line pressure control solenoid ASSY (SLT) (P2720, P2721, P2719)	No defect
Oil temperature sensor (P0711, P0712, P0713)	No defect
Neutral start switch ASSY (P0707, P0708)	No defect
CAN bus OFF (U0073)	No defect
ECM without ID (U0100)	No defect
ECM communication counter (U0401)	No defect
Coolant temperature sensor	No defect
Engine torque signal	No defect
Throttle opening angle sensor	No defect
Accelerator pedal opening angle sensor	No defect
Range position	D
Time elapsed after D range selection	4 seconds or more
Engine coolant temperature	40°C or more
ATF temperature	20°C or more

TYPICAL MALFUNCTION THRESHOLDS

P0766: Shift solenoid "D" (performance/stuck OFF)

Compare the target gear specified by TCM and the gear ratio calculated from turbine shaft speed and vehicle speed.

When both of the following conditions are established: condition (A) and (B)

Condition (A)

Shift position	D position
Target gear position	5th stage
Gear ratio calculated from turbine shaft speed and vehicle speed	4th stage

Condition (B)

Shift position	D position
Target gear position	6th stage
Gear ratio calculated from turbine shaft speed and vehicle speed	4th stage

When both of the following conditions are established: condition (C) and (D)

Condition (C)

Shift position	M position
Target gear position	5th stage
Gear ratio calculated from turbine shaft speed and vehicle speed	4th stage

Condition (D)

Shift position	M position
Target gear position	6th stage
Gear ratio calculated from turbine shaft speed and vehicle speed	4th stage

P0767: Shift solenoid "D" (stuck ON)

Compare the target gear specified by TCM and the gear ratio calculated from turbine shaft speed and vehicle speed.

When both of the following conditions are established: condition (A) and (B)

Condition (A)

Shift position	M position
Target gear position	1st stage
Gear ratio calculated from turbine shaft speed and vehicle speed	2nd stage

Condition (B)

Shift position	M position
Target gear position	5th stage
Gear ratio calculated from turbine shaft speed and vehicle speed	5th stage

P0776: Pressure Control Solenoid "B" Performance/Stuck Off

Compare the target gear specified by TCM and the gear ratio calculated from turbine shaft speed and vehicle speed.

When both of the following conditions are established: condition (A) and (B)

Condition (A)

Shift position	D position
Target gear position	5th stage
Gear ratio calculated from turbine shaft speed and vehicle speed	4th stage

Condition (B)

Shift position	D position
Target gear position	6th stage
Gear ratio calculated from turbine shaft speed and vehicle speed	4th stage

When both of the following conditions are established: condition (C) and (D)

Condition (C)

Shift position	M position
Target gear position	5th stage
Gear ratio calculated from turbine shaft speed and vehicle speed	4th stage

Condition (D)

Shift position	M position
Target gear position	6th stage
Gear ratio calculated from turbine shaft speed and vehicle speed	4th stage

Circuit figure

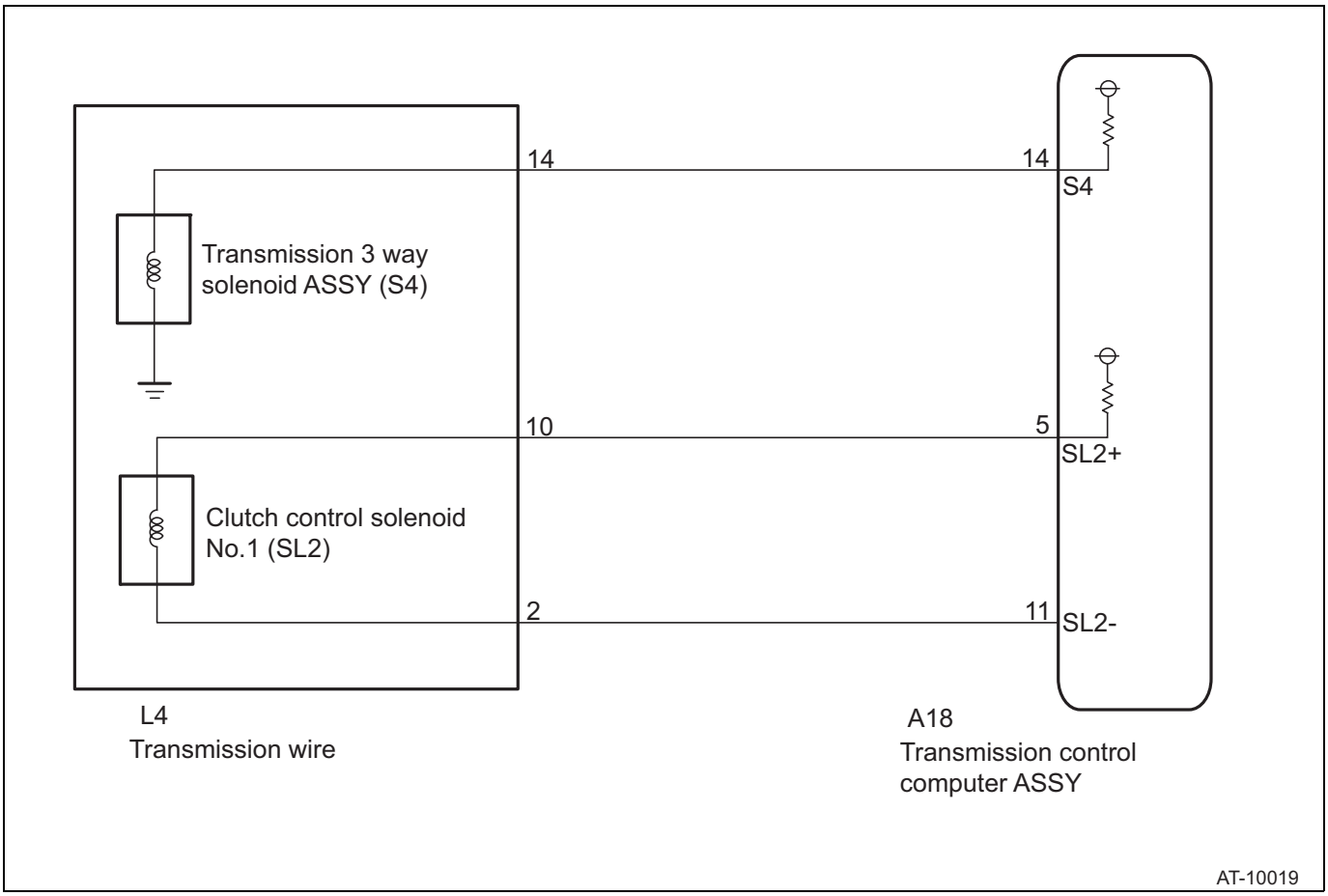

AT

Inspection steps

NOTE:

Gear position when the transmission 3 way solenoid ASSY (S4) is stuck OFF or the clutch control solenoid No.1 (SL2) function is faulty. (Select lever in M position)

TCM shift command stage	1st	2nd	3rd	4th	5th	6th
Gear position	1st	2nd	3rd	4th	4th	4th

Gear position when the transmission 3 way solenoid ASSY (S4) is stuck ON (Select lever in M position)

TCM shift command stage	1st	2nd	3rd	4th	5th	6th
Gear position	2nd	2nd	3rd	4th	5th	6th

1	Read the diagnostic code

(1) Follow the SSM4 on-screen instructions to check the diagnostic codes. (Refer to AT - 17)

Result

Result	Go to
P0766, P0776, and P2714, or only P0752 and P0767 are output.	A
P0766, P0776, and P2714, or P0752, P0767, and other diagnostic codes are output.	B

B	Related diagnostic code chart

A

2	Line pressure check

CAUTION:
- Wash the equipment and hoses with appropriate detergent before and after measurement.
- Always perform the inspection after the engine check and adjustment.
- Perform the inspection at an oil temperature (60 to 90°C) in normal driving condition.
- Perform the inspection with the A/C OFF.
- Do not perform the inspection continuously for 5 seconds or more at stall. (Time from the accelerator full close to full open, stall speed reading and the accelerator full close)
- After performing the stall test, be sure to cool down the engine for at least 1 minute with the select lever set in P or N position, and at an idle speed of 1200 r/min or less.
- If the stall speed is higher than the specified range, finish the stall test in as short a time as possible, in order to prevent the automatic transmission from being damaged.
- Perform the stall test in normal mode.

(1) Remove the under cover No.1.
(2) Remove the under cover No.2.
(3) Remove the exhaust pipe ASSY FR.
(4) Attach the SST on the transmission.
SST 18681AA040, 498897700, 498575400

CAUTION:
- Use 18681AA040 with genuine O-ring (17006AA000) attached.
- Route the hose so that it does not contact the exhaust pipe.

AT

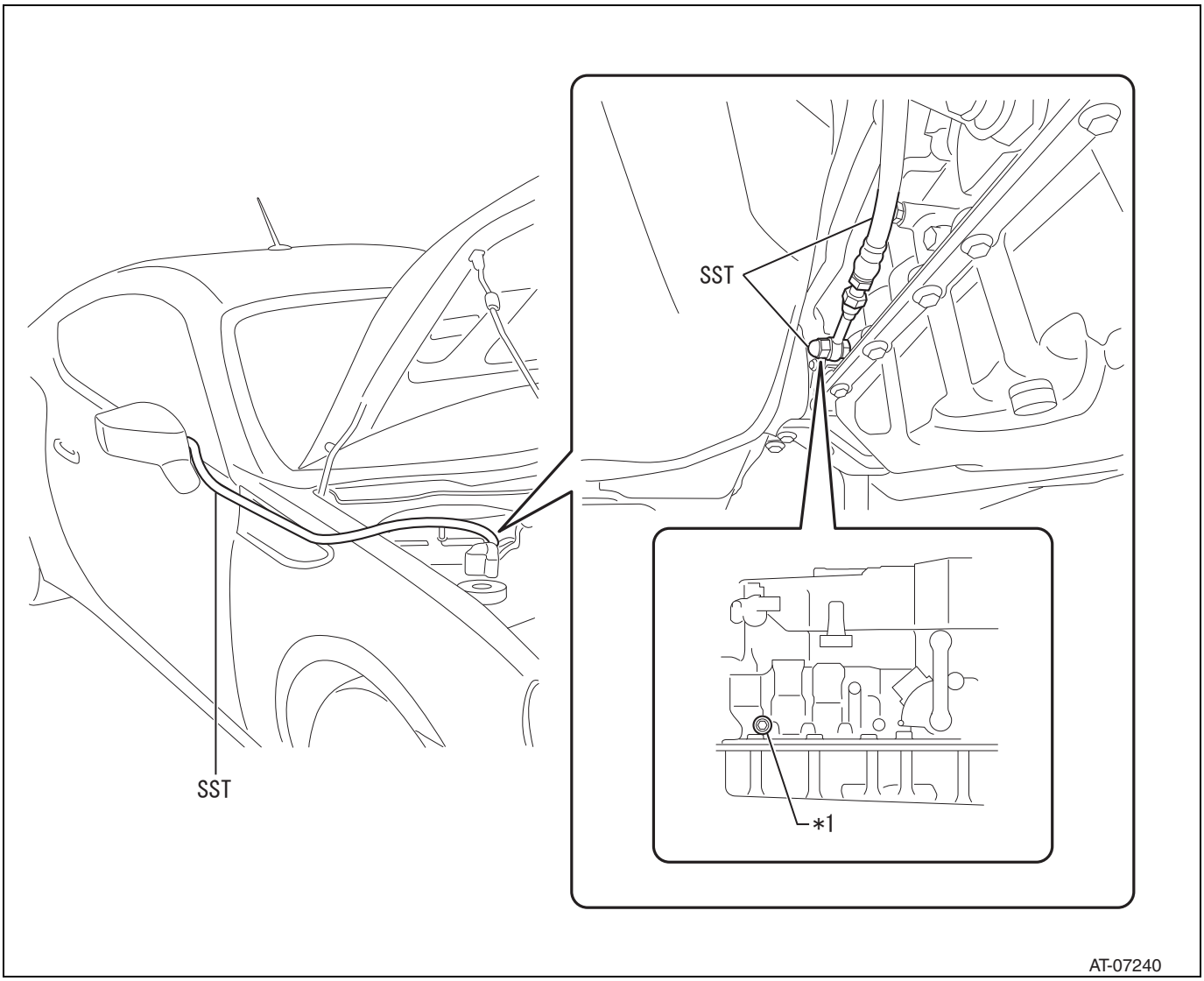

Captions in illustration

*1	Test plug

(5) Install the center exhaust pipe.
(6) Firmly apply the parking brake and set the wheel stoppers.
(7) Remove the test plug, install the gauge and start the engine.
(8) Firmly depress the brake pedal with left foot and shift to D or R position, then check the hydraulic pressure at idling and stalling.

Standard value

Shift position	While idling [MPa {kgf/cm^2}]	While stalling [MPa {kgf/cm^2}]
D position	0.35 to 0.43 {3.6 to 4.4}	1.20 to 1.38 {12.2 to 14.0}
R position	0.76 to 0.95 {7.7 to 9.7}	1.41 to 1.63 {14.4 to 16.6}

NOTE:
When there is an open or short circuit in the line pressure control solenoid ASSY (SLT) system, the line pressure reaches the maximum.

NG → Repair or replacement of transmission valve body ASSY (refer to AT - 176)

OK

3	Check of transmission 3 way solenoid ASSY (S4) system unit

(1) Remove the transmission 3 way solenoid ASSY (S4). (Refer to AT - 179)
(2) Check the transmission 3 way solenoid ASSY (S4) unit. (Refer to AT - 185)

NG → Replacement of the transmission 3 way solenoid ASSY (S4) (Refer to AT - 179)

OK

4	Check of clutch control solenoid No.1 (SL2) unit

(1) Check the clutch control solenoid No.1 (SL2) unit. (Refer to AT - 182)

NG → Repair or replacement of transmission valve body ASSY (refer to AT - 176)

OK

5	Check of transmission valve body ASSY unit

(1) Check the transmission valve body ASSY. (Refer to AT - 176)
Criteria: There is no malfunction and foreign objects on the solenoid installation portions.

NG → Repair or replacement of transmission valve body ASSY (refer to AT - 176)

OK

Repair or replacement of automatic transmission ASSY (refer to AT - 220)

DTC	P0882	TCM Power Input Signal Low

Circuit description

The transmission control computer ASSY detects power supply voltage drop and performs the following fail safe items according to the circumstances.

- Prohibiting learning control (when detecting condition (1) or (2) is established)
- Slippage control, lock-up control, manual mode, prohibiting paddle operation, prohibiting torque up, and prohibiting shift to 5th and 6th gear.

If the problem persists, cut continuity to all the solenoid (lock at 4th gear).

DTC No. SAE/TCCS	DTC detecting condition 1.Diagnosis condition 2.Abnormal condition 3.Abnormal period 4.Other	Inspection parts
P0882	1. When engine speed and transmission revolution sensor (NT) is 400 r/min or more, and CAN and transmission revolution sensor (NT) are normal. 2. IG voltage is 9.0 V or less. 3. Continuing 20 seconds 4. 1 trips	• IG voltage circuit • Wiring harness or connector • Transmission control computer ASSY

Circuit figure

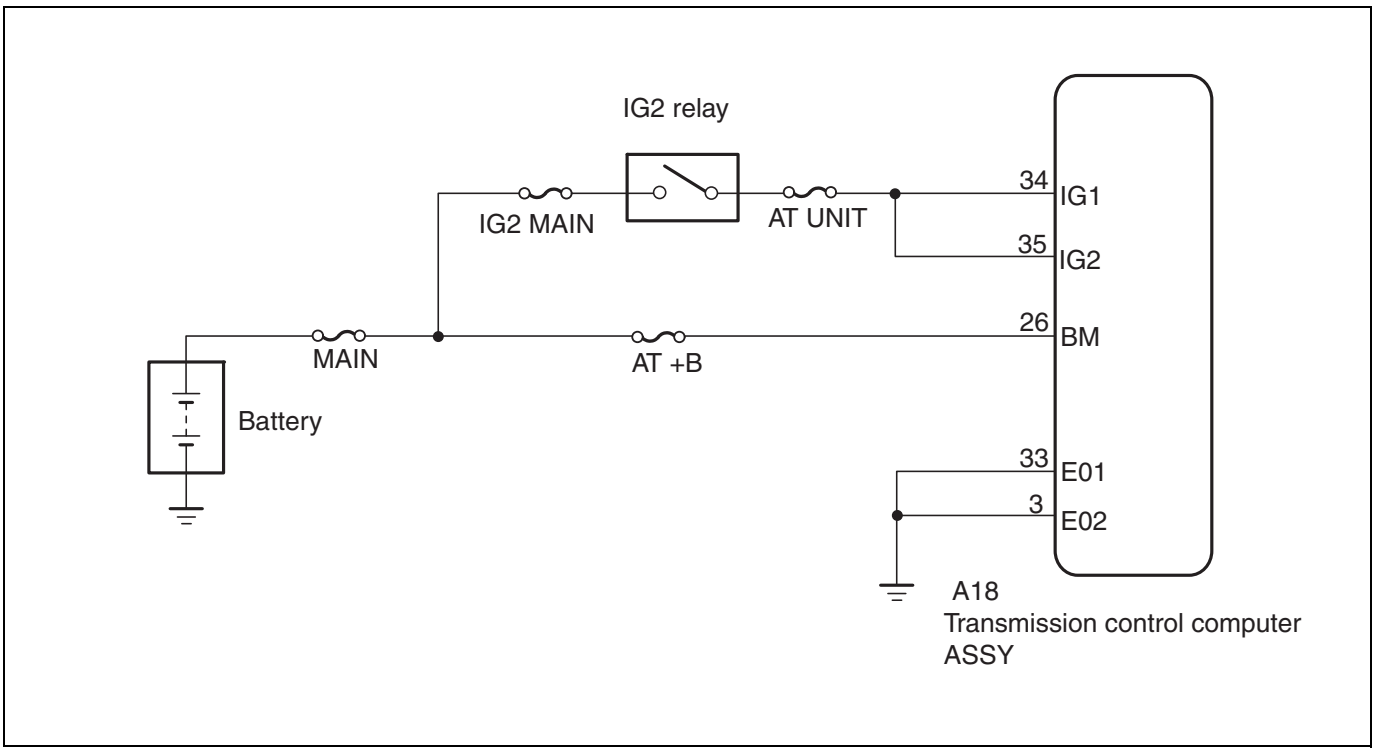

AT

Inspection steps

CAUTION:

Before performing troubleshooting, check the fuse for this circuit.

1	Battery unit check

(1) Perform unit inspection of battery.

NG → Replacement of battery

OK

2	Check of transmission control computer ASSY (IG power supply voltage)

(1) Disconnect the connector A18 of the transmission control computer ASSY.

(2) Measure the voltage between the terminals. (Refer to AT - 24for terminal arrangement of transmission control computer ASSY)

Voltage

Inspection terminals	Inspection conditions	Standard value
A18-34 (IG1) - chassis ground	IG ON	11 to 14 V
A18-35 (IG2) - chassis ground	IG ON	11 to 14 V

(3) Measure the resistance between the terminals. (Refer to AT - 24for terminal arrangement of transmission control computer ASSY)

Resistance

Inspection terminals	Inspection conditions	Standard value
A18-3 (E02) - chassis ground	Always	Less than 1 Ω
A18-33 (E01) - chassis ground	Always	Less than 1 Ω

(4) Connect the connector A18 of the transmission control computer ASSY.

NG → Repair or replacement of wiring harness or connector (power supply system)

OK

3	Replacement of transmission control computer ASSY

(1) Replace the transmission control computer ASSY. (Refer to AT - 322)

Next

AT unit correction (refer to AT - 19)

AT

DTC	P0961	Pressure Control Solenoid "A" Control Circuit Range/ Performance

DTC	P0962	Pressure Control Solenoid "A" Control Circuit Low

DTC	P0963	Pressure Control Solenoid "A" Control Circuit High

Circuit description

Signals from the transmission control computer ASSY change the vehicle speed from 1st to 6th gear according to the combination of the transmission 3 way solenoid ASSY (S1, S2, S3, S4, SR) and the clutch control solenoid No.1 (SL1, SL2). When there is an open or short circuit in the solenoid valve system, the transmission control computer ASSY stops continuity to all solenoids as the fail safe function. As a result, only the mechanical hydraulic circuit is available and the manual shift control is initiated.

DTC No. SAE/TCCS	DTC detecting condition 1. Diagnosis condition 2. Abnormal status 3. Abnormal period 4. Others	Inspection parts
P0961	1. Learning control is not prohibited. SL1 solenoid system (Low/High) is not malfunctioning. 2. The cumulative difference between clutch control solenoid No.1 (SL1) operation set current and operation feedback current is 12 A or more. 3. Abnormal status of item 2 is detected 2 times consecutively. 4. 1 trips	• Clutch control solenoid No.1 (SL1) • Transmission wire • Wiring harness or connector • Transmission control computer ASSY
P0962	1. Learning control is not prohibited. 1 second or more passed after clutch control solenoid No.1 (SL1) is turned OFF. 2. Clutch control solenoid No.1 (SL1) operation feedback voltage is less than 0.018 V. 3. 100 ms or more durations are detected 5 times consecutively. 4. 1 trips	• Clutch control solenoid No.1 (SL1) • Transmission wire • Wiring harness or connector • Transmission control computer ASSY
P0963	1. Learning control is not prohibited. 1 second or more passed after clutch control solenoid No.1 (SL1) is turned ON. 2. Clutch control solenoid No.1 (SL1) operation feedback voltage is 0.257 V or more. 3. 100 ms or more durations are detected 5 times consecutively. 4. 1 trips	• Clutch control solenoid No.1 (SL1) • Transmission wire • Wiring harness or connector • Transmission control computer ASSY

AT

Monitor description

This diagnostic code indicates open or short circuit in the clutch control solenoid No.1 (SL1). TCM switches ON/OFF of the shift solenoid valve to command shifting. If there is open or short circuit in any of the shift solenoid valve circuits, TCM detects the defect, turns on MIL, and records the diagnostic code.

MONITOR STRATEGY

Applicable diagnostic codes	P0961: Pressure Control Solenoid "A" Control Circuit Range/ Performance P0962: Pressure Control Solenoid "A" Control Circuit Low P0963: Pressure Control Solenoid "A" Control Circuit High
Required sensor / component	Clutch control solenoid No.1 (SL1)
Operation frequency	Consecutive
Period	P0961: 2 count P0962: 0.1 seconds x 5 times P0963: 0.1 seconds x 5 times
MIL operation	Immediate
Operation order	None

TYPICAL ENABLING CONDITIONS

P0961: Pressure Control Solenoid "A" Control Circuit Range/Performance

Battery voltage	10.2 V or more
Above condition is established	2 seconds or more
Fail safe mode (solenoid power supply shut down)	Non-active
Clutch control solenoid No.1 (SL1) (P0962, P0963)	No defect
Check the feedback terminal voltage.	0.257V or less
Battery voltage	10.5V or more
Above condition (battery voltage) is established	0.5 seconds or more

P0962: Pressure Control Solenoid "A" Control Circuit Low

Battery voltage	10.2 V or more
Above condition is established	2 seconds or more
Fail safe mode (solenoid power supply shut down)	Non-active
Clutch control solenoid No.1 (SL1) (P0961)	No defect

P0963: Pressure Control Solenoid "A" Control Circuit High

Battery voltage	10.2 V or more
Above condition is established	2 seconds or more
Fail safe mode (solenoid power supply shut down)	Non-active
Clutch control solenoid No.1 (SL1) (P0961)	No defect

TYPICAL MALFUNCTION THRESHOLDS

P0961: Pressure Control Solenoid "A" Control Circuit Range/Performance

Cumulative total of differences between target current and feedback current (Sum_ie)	12 A or more
When 1 or more conditions below are established, Sum_ie is deleted. 1. The permission condition is not established. 2. When the current difference (ie) between target and feedback is -50 mA to 50 mA 3. Positive and negative of ie are reversed.	

P0962: Pressure Control Solenoid "A" Control Circuit Low

Check the feedback terminal voltage.	0.018 V or less
Time elapsed after recovery from battery short circuit	1 second or more

P0963: Pressure Control Solenoid "A" Control Circuit High

Check the feedback terminal voltage.	0.257V or more
Time elapsed after recovery from short circuit to ground/open circuit	1 second or more

Circuit figure

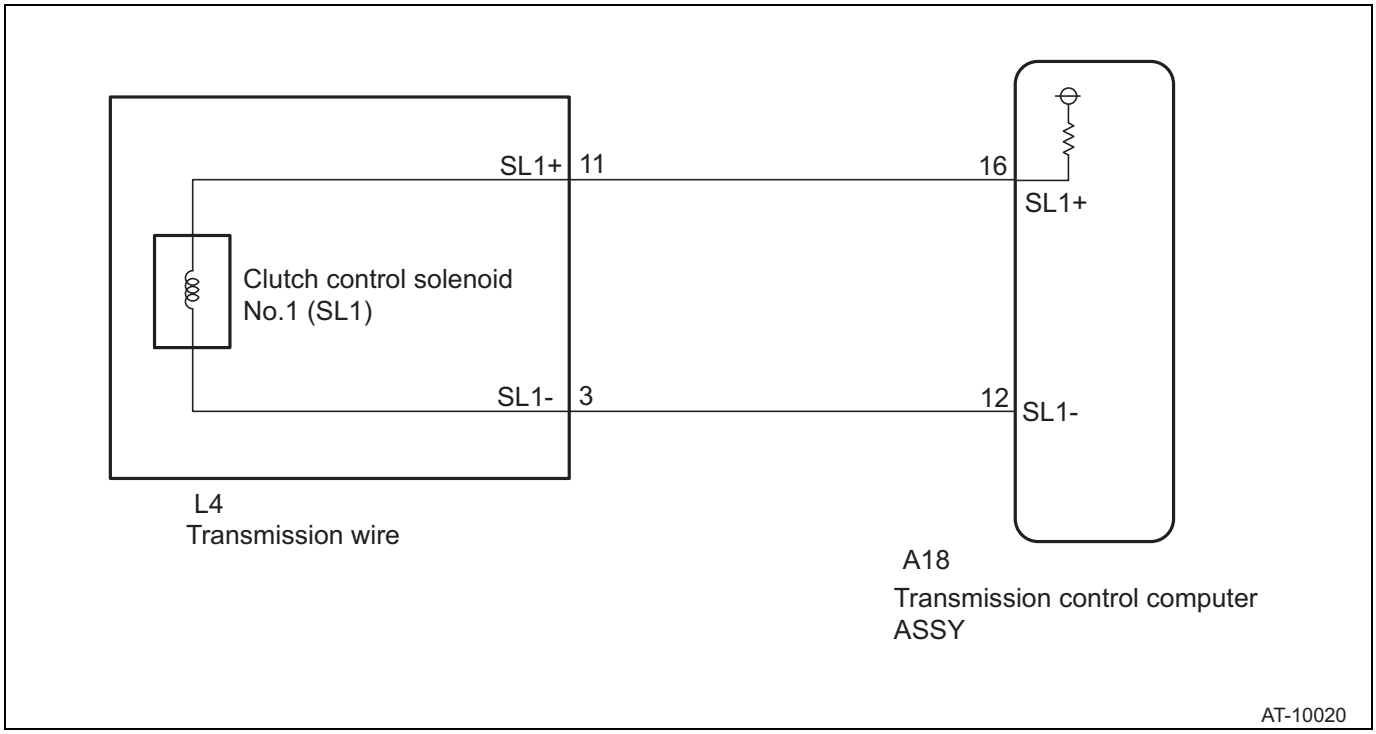

AT

Inspection steps
NOTE:
ON/OFF status when clutch control solenoid No.1 (SL1) is normal (Select lever in D position)

Gear position	1st	2nd	3rd	4th	5th	6th
Clutch control solenoid No.1 (SL1)	OFF	OFF	OFF	OFF	ON	ON

1	Check of transmission wire unit (clutch control solenoid No.1 (SL1))

(1) Disconnect the connector L4 of the transmission wire.
(2) Measure the resistance between the terminals.
Resistance

Inspection terminals	Inspection conditions	Standard value
L4-11 (SL1+) - L4-3 (SL1-)	20°C	5.0 to 5.6 Ω
L4-11 (SL1+) - chassis ground	Always	10 k Ωor more
L4-3 (SL1-) - chassis ground	Always	10 k Ωor more

(3) Connect the connector L4 of the transmission wire.

NG → Go to Step 4.

OK

AT

2	Check wiring harness and connector (transmission wire - transmission control computer ASSY)

(1) Disconnect the connector A18 of the transmission control computer ASSY.
(2) Measure the resistance between the terminals. (For terminal arrangement, refer to AT - 24.)
Resistance

Inspection terminals	Inspection conditions	Standard value
A18-16 (SL1+) - A18-12 (SL1-)	20°C	5.0 to 5.6 Ω
A18-16 (SL1+) - chassis ground	Always	10 k Ωor more
A18-12 (SL1-) - chassis ground	Always	10 k Ωor more

(3) Connect the connector A18 of the transmission control computer ASSY.

NG → Repair or replacement of wiring harness and connector

OK

3	Replacement of transmission control computer ASSY

(1) Replace the transmission control computer ASSY. (Refer to AT - 322)

Next

AT unit correction (refer to AT - 19)

4	Check of clutch control solenoid No.1(SL1) unit

(1) Check the clutch control solenoid No.1 (SL1) unit. (Refer to AT - 184)

NG → Repair or replacement of transmission valve body ASSY (refer to AT - 176)

OK

Repair or replacement of transmission wire (refer to AT - 171)

DTC	P0965	Pressure Control Solenoid "B" Control Circuit Range/ Performance
DTC	P0966	Pressure Control Solenoid "B" Control Circuit Low
DTC	P0967	Pressure Control Solenoid "B" Control Circuit High

AT

Circuit description

Signals from the transmission control computer ASSY change the vehicle speed from 1st to 6th gear according to the combination of the transmission 3 way solenoid ASSY (S1, S2, S3, S4, SR) and the clutch control solenoid No.1 (SL1, SL2). When there is an open or short circuit in the solenoid valve system, the transmission control computer ASSY stops continuity to all solenoids as the fail safe function. As a result, only the mechanical hydraulic circuit is available and the manual shift control is initiated.

DTC No. SAE/TCCS	DTC detecting condition 1. Diagnosis condition 2. Abnormal status 3. Abnormal period 4. Others	Inspection parts
P0965	1. Learning control is not prohibited. 2. The cumulative difference between clutch control solenoid No.1 (SL2) operation set current and operation feedback current is 12 A or more. 3. Abnormal status of item 2 is detected 2 times consecutively. 4. 1 trips	• Clutch control solenoid No.1 (SL2) • Transmission wire • Wiring harness or connector • Transmission control computer ASSY
P0966	1. Learning control is not prohibited. 1 second or more passed after clutch control solenoid No.1 (SL2) is turned OFF. 2. Clutch control solenoid No.1 (SL2) operation feedback voltage is less than 0.018 V. 3. 100 ms or more durations are detected 5 times consecutively. 4. 1 trips	• Clutch control solenoid No.1 (SL2) • Transmission wire • Wiring harness or connector • Transmission control computer ASSY

DTC No. SAE/TCCS	DTC detecting condition 1. Diagnosis condition 2. Abnormal status 3. Abnormal period 4. Others	Inspection parts
P0967	1. Learning control is not prohibited. 1 second or more passed after clutch control solenoid No.1 (SL2) is turned ON. 2. Clutch control solenoid No.1 (SL2) operation feedback voltage is 0.257 V or more. 3. 100 ms or more durations are detected 5 times consecutively. 4. 1 trips	• Clutch control solenoid No.1 (SL2) • Transmission wire • Wiring harness or connector • Transmission control computer ASSY

Monitor description

This diagnostic code indicates open or short circuit in the clutch control solenoid No.1 (SL2). TCM switches ON/OFF of the shift solenoid valve to command shifting. If there is open or short circuit in any of the shift solenoid valve circuits, TCM detects the defect, turns on MIL, and records the diagnostic code.

MONITOR STRATEGY

Applicable diagnostic codes	P0965: Pressure Control Solenoid "B" Control Circuit Range/Performance P0966: Pressure Control Solenoid "A" Control Circuit Low P0967: Pressure Control Solenoid "A" Control Circuit High
Required sensor / component	Clutch control solenoid No.1 (SL2)
Operation frequency	Consecutive
Period	P0965: 2 count P0966: 0.1 seconds x 5 times P0967: 0.1 seconds x 5 times
MIL operation	Immediate
Operation order	None

AT

TYPICAL ENABLING CONDITIONS

P0965: Pressure Control Solenoid "B" Control Circuit Range/Performance

Battery voltage	10.2 V or more
Above condition is established	2 seconds or more
Fail safe mode (solenoid power supply shut down)	Non-active
Clutch control solenoid No.1 (SL2) (P0965, P0966)	No defect
Check the feedback terminal voltage.	0.257V or less
Battery voltage	10.5V or more
Above condition (battery voltage) is established	0.5 seconds or more

P0966: Pressure Control Solenoid "B" Control Circuit Low

Battery voltage	10.2 V or more
Above condition is established	2 seconds or more
Fail safe mode (solenoid power supply shut down)	Non-active
Clutch control solenoid No.1 (SL2) (P0965)	No defect

P0967: Pressure Control Solenoid "B" Control Circuit High

Battery voltage	10.2 V or more
Above condition is established	2 seconds or more
Fail safe mode (solenoid power supply shut down)	Non-active
Clutch control solenoid No.1 (SL2) (P0965)	No defect

TYPICAL MALFUNCTION THRESHOLDS

P0965: Pressure Control Solenoid "B" Control Circuit Range/Performance

Cumulative total of differences between target current and feedback current (Sum_ie)	12 A or more
Sum_ie is updated every 25 milliseconds. When 1 or more conditions below are established, Sum_ie is deleted. 1. The permission condition is not established. 2. When the current difference (ie) between target and feedback is -50 mA to 50 mA 3. Positive and negative of ie are reversed.	

P0966: Pressure Control Solenoid "B" Control Circuit Low

Check the feedback terminal voltage.	0.018 V or less
Time elapsed after recovery from battery short circuit	1 second or more

P0967: Pressure Control Solenoid "B" Control Circuit High

Check the feedback terminal voltage.	0.257V or more
Time elapsed after recovery from short circuit to ground/open circuit	1 second or more

Circuit figure

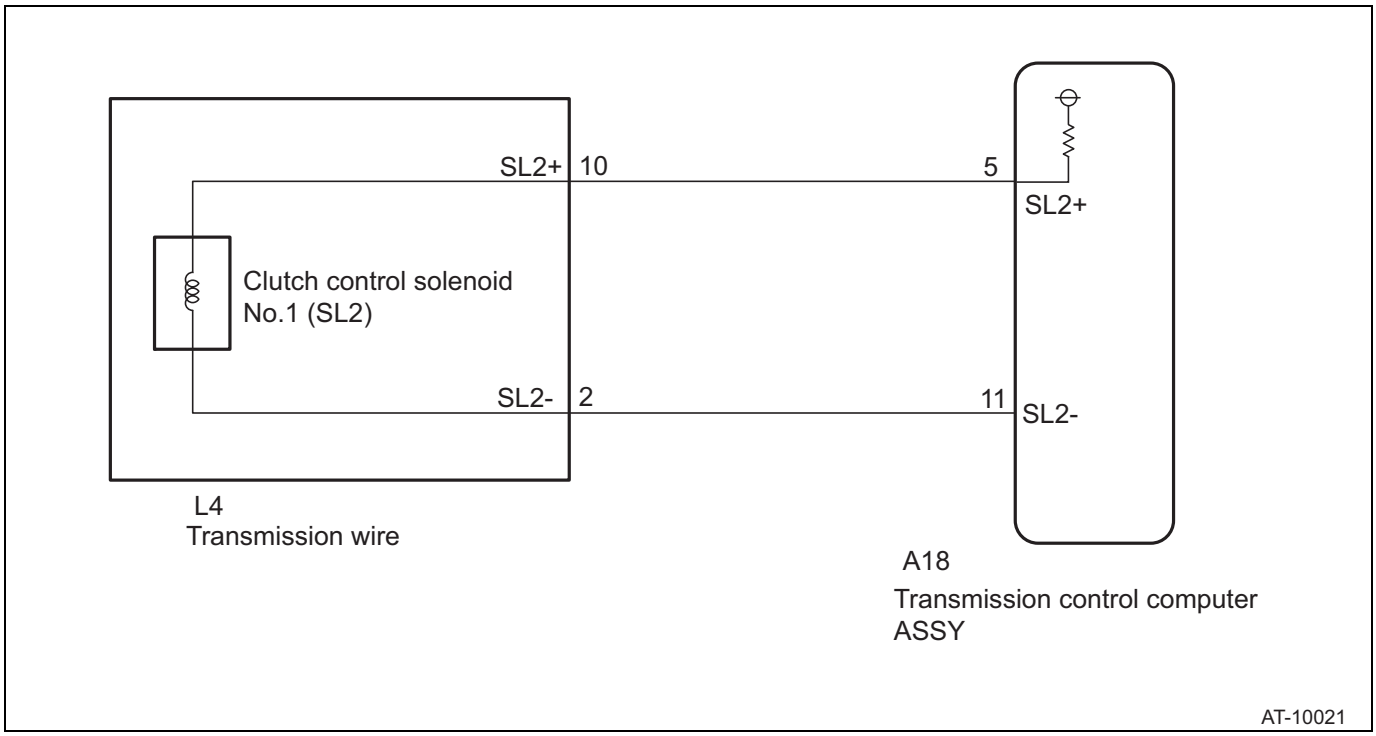

Inspection steps

NOTE:

ON/OFF status when clutch control solenoid No.1 (SL2) is normal (Select lever in D position)

Gear position	1st	2nd	3rd	4th	5th	6th
Clutch control solenoid No.1 (SL2)	ON	OFF	OFF	ON	OFF	OFF

1	Check of transmission wire unit (clutch control solenoid No.1 (SL2))

(1) Disconnect the connector L4 of the transmission wire.

(2) Measure the resistance between the terminals.

Resistance

Inspection terminals	Inspection conditions	Standard value
L4-10 (SL2+) - L4-2 (SL2-)	20°C	5.0 to 5.6 Ω
L4-10 (SL2+) - chassis ground	Always	10 k Ωor more
L4-2 (SL2-) - chassis ground	Always	10 k Ωor more

(3) Connect the connector L4 of the transmission wire.

NG → Go to Step 4.

OK

2	Check wiring harness and connector (transmission wire - transmission control computer ASSY)

(1) Disconnect the connector A18 of the transmission control computer ASSY.
(2) Measure the resistance between the terminals. (For terminal arrangement, refer to AT - 24.)

Resistance

Inspection terminals	Inspection conditions	Standard value
A18-5 (SL2+) - A18-11 (SL2-)	20°C	5.0 to 5.6Ω
A18-5 (SL2+) - chassis ground	Always	10 k Ωor more
A18-11 (SL2-) - chassis ground	Always	10 k Ωor more

(3) Connect the connector A18 of the transmission control computer ASSY.

NG → Repair or replacement of wiring harness or connector

OK

3	Replacement of transmission control computer ASSY

(1) Replace the transmission control computer ASSY. (Refer to AT - 322)

Next

AT unit correction (refer to AT - 19)

4	Check of clutch control solenoid No.1 (SL2) unit

(1) Check the clutch control solenoid No.1 (SL2) unit. (Refer to AT - 182)

NG → Repair or replacement of transmission valve body ASSY (refer to AT - 176)

AT

OK

Repair or replacement of transmission wire (refer to AT - 171)

DTC	P0973	Shift Solenoid "A" Control Circuit Low

DTC	P0974	Shift Solenoid "A" Control Circuit High

Circuit description

Signals from the transmission control computer ASSY change the vehicle speed from 1st to 6th gear according to the combination of the transmission 3 way solenoid ASSY (S1, S2, S3, S4, SR) and the clutch control solenoid No.1 (SL1, SL2). When there is an open or short circuit in the solenoid valve system, the transmission control computer ASSY stops continuity to all solenoids as the fail safe function. As a result, only the mechanical hydraulic circuit is available and the manual shift control is initiated.

DTC No. SAE/TCCS	DTC detecting condition 1.Diagnosis condition 2.Abnormal condition 3.Abnormal period 4.Other	Inspection parts
P0973	1. Learning control is not prohibited. 2. When transmission 3 way solenoid ASSY (S1) ON is output, transmission control computer ASSY S1 output monitor value is OFF. 3. 500 ms or more durations 4. 1 trips	• Transmission 3 way solenoid ASSY (S1) • Transmission wire • Wiring harness or connector • Transmission control computer ASSY
P0974	1. Learning control is not prohibited. 2. When transmission 3 way solenoid ASSY (S1) OFF is output, transmission control computer ASSY S1 output monitor value is ON. 3. 500 ms or more durations 4. 1 trips	• Transmission 3 way solenoid ASSY (S1) • Transmission wire • Wiring harness or connector • Transmission control computer ASSY

AT

Monitor description

These diagnostic codes indicate open or short circuit in the transmission 3 way solenoid ASSY (S1) circuit. If there is open or short circuit in any of the shift solenoid valve circuits, TCM detects the defect, turns on MIL, and records the diagnostic code.

MONITOR STRATEGY

Applicable diagnostic codes	P0973: Shift Solenoid "A" Control Circuit Low P0974: Shift Solenoid "A" Control Circuit High
Required sensor / component	Transmission 3 way solenoid ASSY (S1)
Operation frequency	Consecutive
Period	0.5 seconds
MIL operation	Immediate
Operation order	None

TYPICAL ENABLING CONDITIONS

Battery voltage	10.2 V or more
Above condition is established	2 seconds or more
Fail safe mode (solenoid power supply shut down)	Non-active

TYPICAL MALFUNCTION THRESHOLDS

P0973: Shift Solenoid "A" Control Circuit Low

Output monitor status when TCM outputs ON signal	OFF

P0974: Shift Solenoid "A" Control Circuit High

Output monitor status when TCM outputs OFF signal	ON

Circuit figure

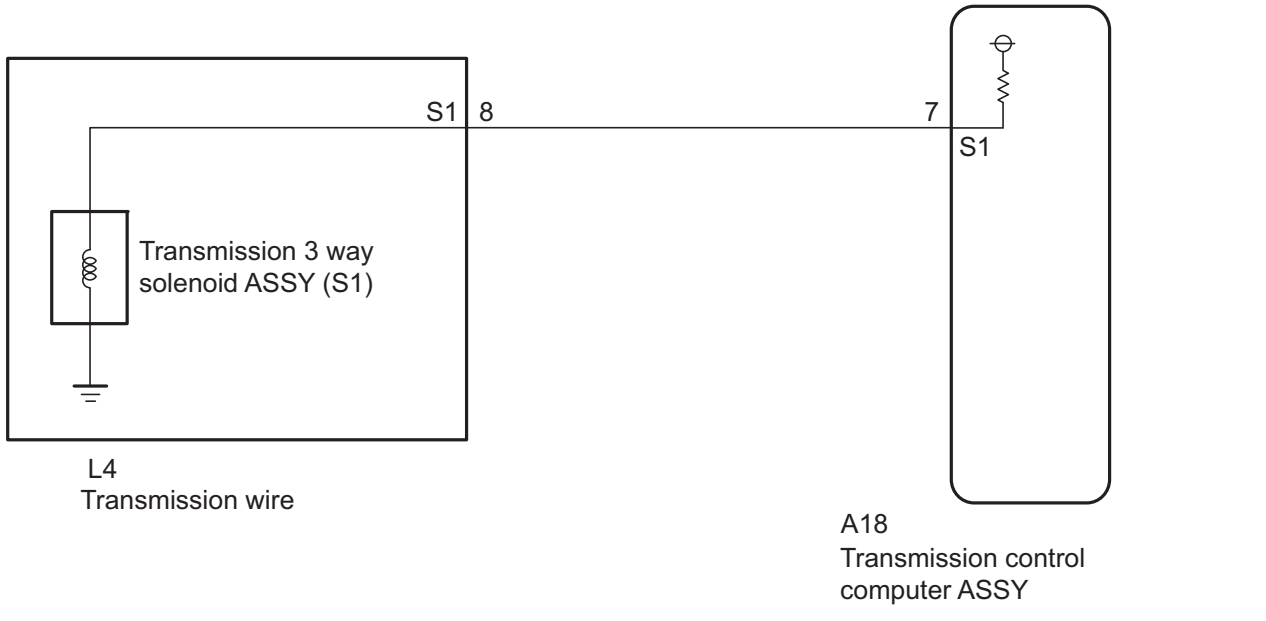

AT

Inspection steps

NOTE:

ON/OFF status when transmission 3 way solenoid ASSY (S1) is normal (Select lever in D position)

Gear position	1st	2nd	3rd	4th	5th	6th
Transmission 3 way solenoid ASSY (S1)	OFF	ON	ON	ON	ON	ON

1	Check of transmission 3 way solenoid ASSY (S1) system

(1) Disconnect the connector A18 of the transmission control computer ASSY.

(2) Measure the voltage between the terminals. (Refer to AT - 24for terminal arrangement of transmission control computer ASSY)

Voltage

Inspection terminals	Inspection conditions	Standard value
A18-7 (S1) - chassis ground	IG ON	Less than 1 V

(3) Measure the resistance between the terminals. (Refer to AT - 24for terminal arrangement of transmission control computer ASSY)

Resistance

Inspection terminals	Inspection conditions	Standard value
A18-7 (S1) - chassis ground	20°C	11 to 15 Ω

(4) Connect the connector A18 of the transmission control computer ASSY.

NG → Go to Step 4.

OK

2	Check wiring harness and connector (transmission wire - transmission control computer ASSY)

(1) Disconnect the connector A18 of the transmission control computer ASSY.
(2) Disconnect the connector L4 of the transmission control wire.
(3) Measure the voltage between the terminals.

Voltage

Inspection terminals	Inspection conditions	Standard value
L4-8 (S1) - chassis ground	IG ON	Less than 1 V

(4) Measure the resistance between the terminals.

Resistance

Inspection terminals	Inspection conditions	Standard value
L4-8 (S1) - A18-7 (S1)	Always	Less than 1 Ω
L4-8 (S1) and A18-7 (S1) - chassis ground	Always	10 k Ωor more

(5) Connect the connector L4 of the transmission wire.
(6) Connect the connector A18 of the transmission control computer ASSY.

NG → Repair or replacement of wiring harness or connector

OK

3	Replacement of transmission control computer ASSY

(1) Replace the transmission control computer ASSY. (Refer to AT - 322)

Next

AT unit correction (refer to AT - 19)

4	Check of transmission 3 way solenoid ASSY (S1) unit

(1) Remove the transmission 3 way solenoid ASSY (S1). (Refer to AT - 179)
(2) Check the transmission 3 way solenoid ASSY (S1) unit. (Refer to AT - 184)

NG → Replacement of the transmission 3 way solenoid ASSY (S1) (Refer to AT - 179)

AT

OK

Repair or replacement of transmission wire (refer to AT - 171)

DTC	P0976	Shift Solenoid "B" Control Circuit Low

DTC	P0977	Shift Solenoid "B" Control Circuit High

Circuit description

Signals from the transmission control computer ASSY change the vehicle speed from 1st to 6th gear according to the combination of the transmission 3 way solenoid ASSY (S1, S2, S3, S4, SR) and the clutch control solenoid No.1 (SL1, SL2). When there is an open or short circuit in the solenoid valve system, the transmission control computer ASSY stops continuity to all solenoids as the fail safe function. As a result, only the mechanical hydraulic circuit is available and the manual shift control is initiated.

DTC No. SAE/TCCS	DTC detecting condition 1.Diagnosis condition 2.Abnormal condition 3.Abnormal period 4.Other	Inspection parts
P0976	1. Learning control is not prohibited. 2. When transmission 3 way solenoid ASSY (S2) ON is output, S2 output monitor value is OFF. 3. 500 ms or more durations 4. 1 trips	• Transmission 3 way solenoid ASSY (S2) • Transmission wire • Wiring harness or connector • Transmission control computer ASSY
P0977	1. Learning control is not prohibited. 2. When transmission 3 way solenoid ASSY (S2) OFF is output, S2 output monitor value is ON. 3. 500 ms or more durations 4. 1 trips	• Transmission 3 way solenoid ASSY (S2) • Transmission wire • Wiring harness or connector • Transmission control computer ASSY

AT

Monitor description

These diagnostic codes indicate open or short circuit in the transmission 3 way solenoid ASSY (S2) circuit. If there is open or short circuit in any of the shift solenoid valve circuits, TCM detects the defect, turns on MIL, and records the diagnostic code.

MONITOR STRATEGY

Applicable diagnostic codes	P0976: Shift Solenoid "B" Control Circuit Low P0977: Shift Solenoid "B" Control Circuit High
Required sensor / component	Transmission 3 way solenoid ASSY (S2)
Operation frequency	Consecutive
Period	0.5 seconds
MIL operation	Immediate
Operation order	None

TYPICAL ENABLING CONDITIONS

Battery voltage	10.2 V or more
Above condition is established	2 seconds or more
Fail safe mode (solenoid power supply shut down)	Non-active

TYPICAL MALFUNCTION THRESHOLDS

P0976: Shift Solenoid "B" Control Circuit Low

Output monitor status when TCM outputs ON signal	OFF

P0977: Shift Solenoid "B" Control Circuit High

Output monitor status when TCM outputs OFF signal	ON

Circuit figure

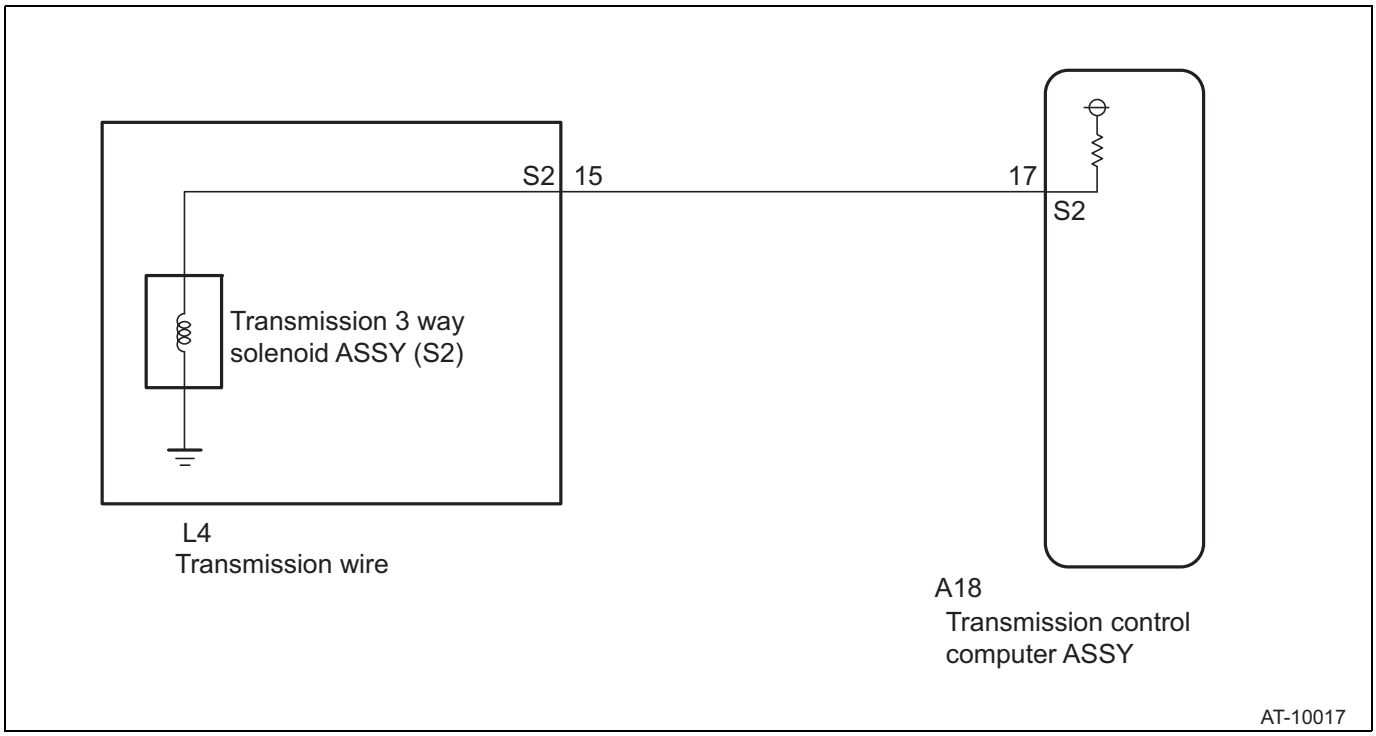

AT

Inspection steps

NOTE:

ON/OFF status when transmission 3 way solenoid ASSY (S2) is normal (Select lever in D position)

Gear position	1st	2nd	3rd	4th	5th	6th
Transmission 3 way solenoid ASSY (S2)	ON	ON	OFF	OFF	OFF	ON

1	Check of transmission 3 way solenoid ASSY (S2) system

(1) Disconnect the connector A18 of the transmission control computer ASSY.

(2) Measure the voltage between the terminals. (Refer to AT - 24for terminal arrangement of transmission control computer ASSY)

Voltage

Inspection terminals	Inspection conditions	Standard value
A18-17 (S2) - chassis ground	IG ON	Less than 1 V

(3) Measure the resistance between the terminals. (Refer to AT - 24for terminal arrangement of transmission control computer ASSY)

Resistance

Inspection terminals	Inspection conditions	Standard value
A18-17 (S2) - chassis ground	20°C	11 to 15Ω

(4) Connect the connector A18 of the transmission control computer ASSY.

NG → Go to Step 4.

OK

2	Check wiring harness and connector (transmission wire - transmission control computer ASSY)

(1) Disconnect the connector A18 of the transmission control computer ASSY.
(2) Disconnect the connector L4 of the transmission wire.
(3) Measure the voltage between the terminals.

Voltage

Inspection terminals	Inspection conditions	Standard value
L4-15 (S2) - chassis ground	IG ON	Less than 1 V

(4) Measure the resistance between the terminals.

Resistance

Inspection terminals	Inspection conditions	Standard value
L4-15 (S2) - A18-17 (S2)	Always	Less than 1 Ω
L4-15 (S2) and A18-17 (S2) - chassis ground	Always	10 k Ωor more

(5) Connect the connector L4 of the transmission wire.
(6) Connect the connector A18 of the transmission control computer ASSY.

NG → Repair or replacement of wiring harness or connector

OK

3	Replacement of transmission control computer ASSY

(1) Replace the transmission control computer ASSY. (Refer to AT - 322)

Next

AT unit correction (refer to AT - 19)

4	Check of transmission 3 way solenoid ASSY (S2) unit

(1) Remove the transmission 3 way solenoid ASSY (S2). (Refer to AT - 179)
(2) Check the transmission 3 way solenoid ASSY (S2) unit. (Refer to AT - 185)

NG → Replacement of the transmission 3 way solenoid ASSY (S2) (Refer to AT - 179)

AT

OK

Repair or replacement of transmission wire (refer to AT - 171)

DTC	P0979	Shift Solenoid "C" Control Circuit Low

DTC	P0980	Shift Solenoid "C" Control Circuit High

Circuit description

Signals from the transmission control computer ASSY change the vehicle speed from 1st to 6th gear according to the combination of the transmission 3 way solenoid ASSY (S1, S2, S3, S4, SR) and the clutch control solenoid No.1 (SL1, SL2). When there is an open or short circuit in the solenoid valve system, the transmission control computer ASSY stops continuity to all solenoids as the fail safe function. As a result, only the mechanical hydraulic circuit is available and the manual shift control is initiated.

DTC No. SAE/TCCS	DTC detecting condition 1.Diagnosis condition 2.Abnormal condition 3.Abnormal period 4.Other	Inspection parts
P0979	1. Learning control is not prohibited. 2. When transmission 3 way solenoid ASSY (S3) ON is output, S3 output monitor value is OFF. 3. 500 ms or more durations 4. 1 trips	• Transmission 3 way solenoid ASSY (S3) • Transmission wire • Wiring harness or connector • Transmission control computer ASSY
P0980	1. Learning control is not prohibited. 2. When transmission 3 way solenoid ASSY (S3) OFF is output, S3 output monitor value is ON. 3. 500 ms or more durations 4. 1 trips	• Transmission 3 way solenoid ASSY (S3) • Transmission wire • Wiring harness or connector • Transmission control computer ASSY

AT

Monitor description

These diagnostic codes indicate open or short circuit in the transmission 3 way solenoid ASSY (S3) circuit. If there is open or short circuit in any of the shift solenoid valve circuits, TCM detects the defect, turns on MIL, and records the diagnostic code.

MONITOR STRATEGY

Applicable diagnostic codes	P0979: Shift Solenoid "C" Control Circuit Low P0980: Shift Solenoid "C" Control Circuit High
Required sensor / component	Transmission 3 way solenoid ASSY (S3)
Operation frequency	Consecutive
Period	0.5 seconds
MIL operation	Immediate
Operation order	None

TYPICAL ENABLING CONDITIONS

Battery voltage	10.2 V or more
Above condition is established	2 seconds or more
Fail safe mode (solenoid power supply shut down)	Non-active

TYPICAL MALFUNCTION THRESHOLDS

P0979: Shift Solenoid "C" Control Circuit Low

Output monitor status when TCM outputs ON signal	OFF

P0980: Shift Solenoid "C" Control Circuit High

Output monitor status when TCM outputs OFF signal	ON

Circuit figure

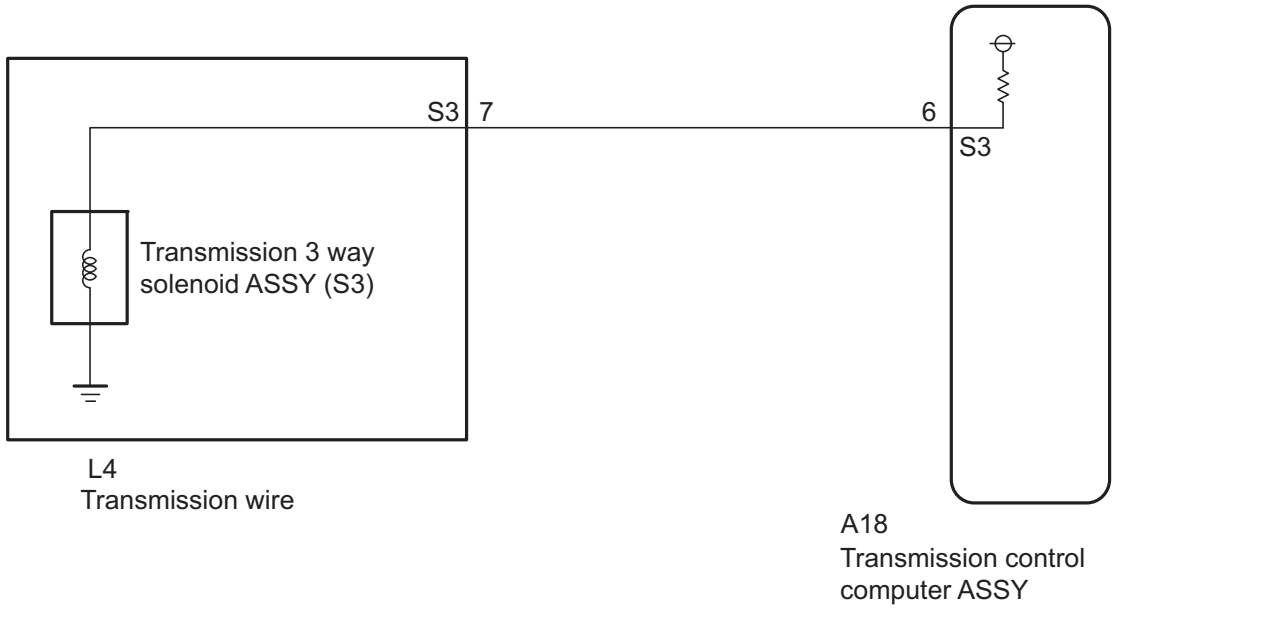

AT

Inspection steps

NOTE:

ON/OFF status when transmission 3 way solenoid ASSY (S3) is normal (Select lever in D position)

Gear position	1st	2nd	3rd	4th	5th	6th
Transmission 3 way solenoid ASSY (S3)	ON	ON	ON	OFF	OFF	OFF

1	Check of transmission 3 way solenoid ASSY (S3) system

(1) Disconnect the connector A18 of the transmission control computer ASSY.

(2) Measure the voltage between the terminals. (Refer to AT - 24for terminal arrangement of transmission control computer ASSY)

Voltage

Inspection terminals	Inspection conditions	Standard value
A18-6 (S3) - chassis ground	IG ON	Less than 1 V

(3) Measure the resistance between the terminals. (Refer to AT - 24for terminal arrangement of transmission control computer ASSY)

Resistance

Inspection terminals	Inspection conditions	Standard value
A18-6 (S3) - chassis ground	20°C	11 to 15Ω

(4) Connect the connector A18 of the transmission control computer ASSY.

NG → Go to Step 4.

OK

2	Check wiring harness and connector (transmission wire - transmission control computer)

(1) Disconnect the connector A18 of the transmission control computer ASSY.
(2) Disconnect the connector L4 of the transmission wire.
(3) Measure the voltage between the terminals.

Voltage

Inspection terminals	Inspection conditions	Standard value
L4-7 (S3) - chassis ground	IG ON	Less than 1 V

(4) Measure the resistance between the terminals.

Resistance

Inspection terminals	Inspection conditions	Standard value
L4-7 (S3) - A18-6 (S3)	Always	Less than 1 Ω
L4-7 (S3) - chassis ground	Always	10 k Ωor more

(5) Connect the connector L4 of the transmission wire.
(6) Connect the connector A18 of the transmission control computer ASSY.

NG → Repair or replacement of wiring harness or connector

OK

3	Replacement of transmission control computer ASSY

(1) Replace the transmission control computer ASSY. (Refer to AT - 322)

Next

AT unit correction (refer to AT - 19)

4	Check of transmission 3 way solenoid ASSY (S3) unit

(1) Remove the transmission 3 way solenoid ASSY (S3). (Refer to AT - 180)
(2) Check the transmission 3 way solenoid ASSY (S3) unit. (Refer to AT - 185)

NG → Replacement of the transmission 3 way solenoid ASSY (S3) (Refer to AT - 180)

AT

OK

Repair or replacement of transmission wire (refer to AT - 171)

DTC	P0982	Shift Solenoid "D" Control Circuit Low

DTC	P0983	Shift Solenoid "D" Control Circuit High

Circuit description

Signals from the transmission control computer ASSY change the vehicle speed from 1st to 6th gear according to the combination of the transmission 3 way solenoid ASSY (S1, S2, S3, S4, SR) and the clutch control solenoid No.1 (SL1, SL2). When there is an open or short circuit in the solenoid valve system, the transmission control computer ASSY stops continuity to all solenoids as the fail safe function. As a result, only the mechanical hydraulic circuit is available and the manual shift control is initiated.

DTC No. SAE/TCCS	DTC detecting condition 1.Diagnosis condition 2.Abnormal condition 3.Abnormal period 4.Other	Inspection parts
P0982	1. Learning control is not prohibited. 2. When transmission 3 way solenoid ASSY (S4) ON is output, S4 output monitor value is OFF. 3. 500 ms or more durations 4. 1 trips	• Transmission 3 way solenoid ASSY (S4) • Transmission wire • Wiring harness or connector • Transmission control computer ASSY
P0983	1. Learning control is not prohibited. 2. When transmission 3 way solenoid ASSY (S4) OFF is output, S4 output monitor value is ON. 3. 500 ms or more durations 4. 1 trips	• Transmission 3 way solenoid ASSY (S4) • Transmission wire • Wiring harness or connector • Transmission control computer ASSY

AT

Monitor description

These diagnostic codes indicate open or short circuit in the transmission 3 way solenoid ASSY (S4) circuit. If there is open or short circuit in any of the shift solenoid valve circuits, TCM detects the defect, turns on MIL, and records the diagnostic code.

MONITOR STRATEGY

Applicable diagnostic codes	P0982: Shift Solenoid "D" Control Circuit Low P0983: Shift Solenoid "D" Control Circuit High
Required sensor / component	Transmission 3 way solenoid ASSY (S4)
Operation frequency	Consecutive
Period	0.5 seconds
MIL operation	Immediate
Operation order	None

TYPICAL ENABLING CONDITIONS

Battery voltage	10.2 V or more
Above condition is established	2 seconds or more
Fail safe mode (solenoid power supply shut down)	Non-active

TYPICAL MALFUNCTION THRESHOLDS

P0982: Shift Solenoid "D" Control Circuit Low

Output monitor status when TCM outputs ON signal	OFF

P0983: Shift Solenoid "D" Control Circuit High

Output monitor status when TCM outputs OFF signal	ON

Circuit figure

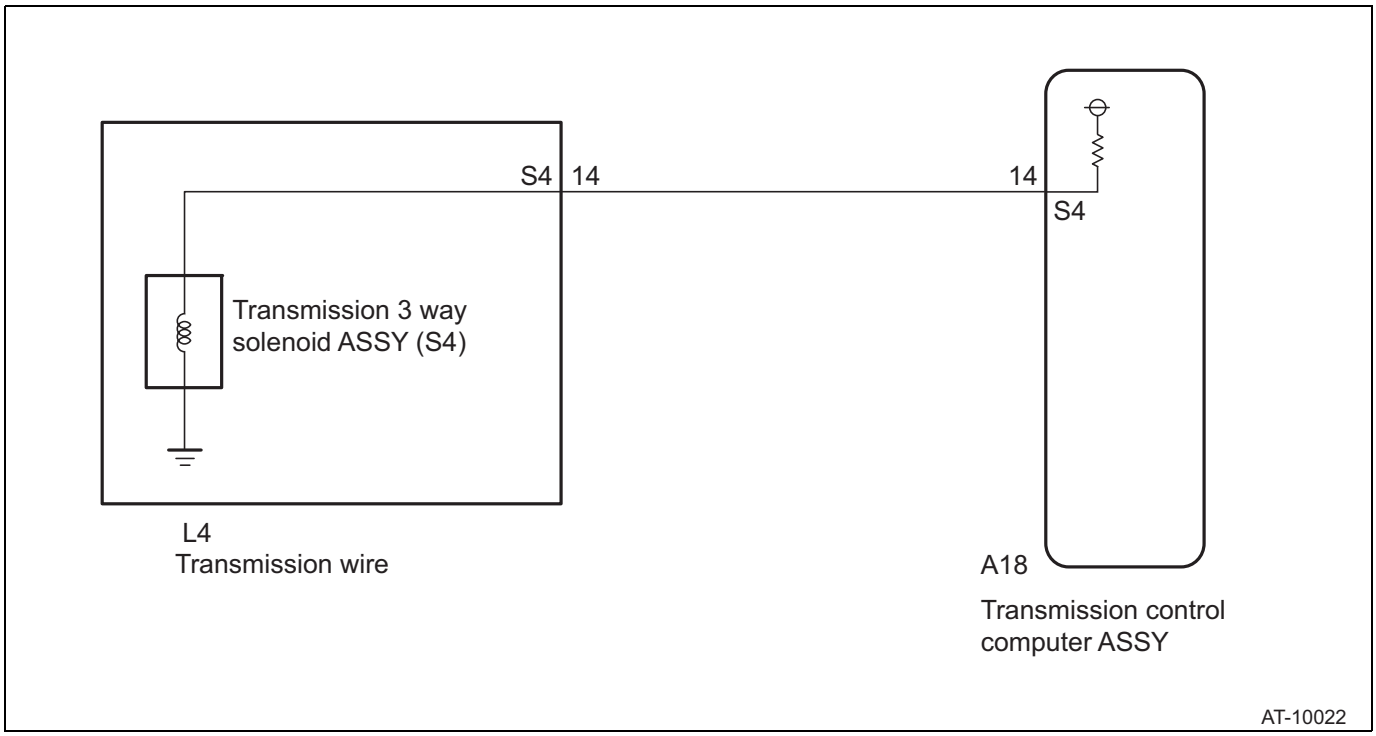

Inspection steps

NOTE:

ON/OFF status when transmission 3 way solenoid ASSY (S4) is normal (Select lever in D position)

Gear position	1st	2nd	3rd	4th	5th	6th
Transmission 3 way solenoid ASSY (S4)	OFF	ON	OFF	OFF	ON	ON

1	Check of transmission 3 way solenoid ASSY (S4) system (transmission 3 way solenoid ASSY (S4))

(1) Disconnect the connector A18 of the transmission control computer ASSY.

(2) Measure the voltage between the terminals. (Refer to AT - 24for terminal arrangement of transmission control computer ASSY)

Voltage

Inspection terminals	Inspection conditions	Standard value
A18-14 (S4) - chassis ground	IG ON	Less than 1 V

(3) Measure the resistance between the terminals. (Refer to AT - 24for terminal arrangement of transmission control computer ASSY)

Resistance

Inspection terminals	Inspection conditions	Standard value
A18-14 (S4) - chassis ground	20°C	11 to 15Ω

AT

(4) Connect the connector A18 of the transmission control computer ASSY.

NG → Go to Step 4.

OK

2	Check wiring harness and connector (transmission wire - transmission control computer)

(1) Disconnect the connector A18 of the transmission control computer ASSY.
(2) Disconnect the connector L4 of the transmission wire.
(3) Measure the voltage between the terminals.

Voltage

Inspection terminals	Inspection conditions	Standard value
L4-14 (S4) - chassis ground	IG ON	Less than 1 V

(4) Measure the resistance between the terminals.

Resistance

Inspection terminals	Inspection conditions	Standard value
L4-14 (S4) - A18-14	Always	Less than 1 Ω
L4-14 (S4) and A18-14 (S4) - chassis ground	Always	10 k Ωor more

(5) Connect the connector L4 of the transmission wire.
(6) Connect the connector A18 of the transmission control computer ASSY.

NG → Repair or replacement of wiring harness or connector

OK

3	Replacement of transmission control computer ASSY

(1) Replace the transmission control computer ASSY. (Refer to AT - 322)

Next

AT unit correction (refer to AT - 19)

4	Check of transmission 3 way solenoid ASSY (S4) unit

(1) Remove the transmission 3 way solenoid ASSY (S4). (Refer to AT - 179)
(2) Check the transmission 3 way solenoid ASSY (S4) unit. (Refer to AT - 185)

NG → Replacement of the transmission 3 way solenoid ASSY (S4) (Refer to AT - 179)

AT

OK

Repair or replacement of transmission wire (refer to AT - 171)

DTC	P0985	Shift Solenoid "E" Control Circuit Low

DTC	P0986	Shift Solenoid "E" Control Circuit High

Circuit description

Signals from the transmission control computer ASSY change the vehicle speed from 1st to 6th gear according to the combination of the transmission 3 way solenoid ASSY (S1, S2, S3, S4, SR) and the clutch control solenoid No.1 (SL1, SL2). When there is an open or short circuit in the solenoid valve system, the transmission control computer ASSY stops continuity to all solenoids as the fail safe function. As a result, only the mechanical hydraulic circuit is available and the manual shift control is initiated.

DTC No. SAE/TCCS	DTC detecting condition 1.Diagnosis condition 2.Abnormal condition 3.Abnormal period 4.Other	Inspection parts
P0985	1. Learning control is not prohibited. 2. When transmission 3 way solenoid ASSY (SR) ON is output, SR output monitor value is OFF. 3. 500 ms or more durations 4. 1 trips	• Transmission 3 way solenoid ASSY (SR) • Transmission wire • Wiring harness or connector • Transmission control computer ASSY
P0986	1. Learning control is not prohibited. 2. When transmission 3 way solenoid ASSY (SR) OFF is output, SR output monitor value is ON. 3. 500 ms or more durations 4. 1 trips	• Transmission 3 way solenoid ASSY (SR) • Transmission wire • Wiring harness or connector • Transmission control computer ASSY

AT

Monitor description

These diagnostic codes indicate open or short circuit in the transmission 3 way solenoid ASSY (SR) circuit. If there is open or short circuit in any of the shift solenoid valve circuits, TCM detects the defect, turns on MIL, and records the diagnostic code.

MONITOR STRATEGY

Applicable diagnostic codes	P0985: Shift Solenoid "E" Control Circuit Low P0986: Shift Solenoid "E" Control Circuit High
Required sensor / component	Transmission 3 way solenoid ASSY (SR)
Operation frequency	Consecutive
Period	0.5 seconds
MIL operation	Immediate
Operation order	None

TYPICAL ENABLING CONDITIONS

Battery voltage	10.2 V or more
Above condition is established	2 seconds or more
Fail safe mode (solenoid power supply shut down)	Non-active

TYPICAL MALFUNCTION THRESHOLDS

P0985: Shift Solenoid "E" Control Circuit Low

Output monitor status when TCM outputs ON signal	OFF

P0986: Shift Solenoid "E" Control Circuit High

Output monitor status when TCM outputs OFF signal	ON

Circuit figure

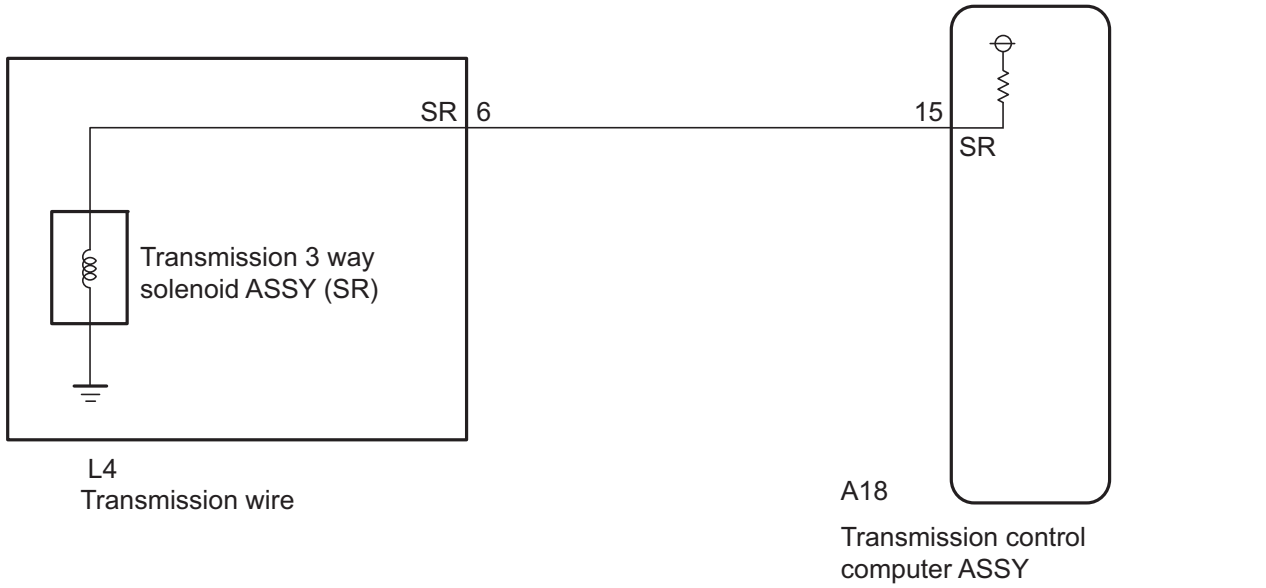

AT

Inspection steps

NOTE:

ON/OFF status when transmission 3 way solenoid ASSY (SR) is normal (Select lever in D position)

Gear position	1st	2nd	3rd	4th	5th	6th
Transmission 3 way solenoid ASSY (SR)	ON	ON	ON	ON	OFF	OFF

1	Check of transmission 3 way solenoid ASSY (SR) system

(1) Disconnect the connector A18 of the transmission control computer ASSY.

(2) Measure the voltage between the terminals. (Refer to AT - 24for terminal arrangement of transmission control computer ASSY)

Voltage

Inspection terminals	Inspection conditions	Standard value
A18-15 (SR) - chassis ground	IG ON	Less than 1 V

(3) Measure the resistance between the terminals. (Refer to AT - 24for terminal arrangement of transmission control computer ASSY)

Resistance

Inspection terminals	Inspection conditions	Standard value
A18-15 (SR) - chassis ground	20°C	11 to 15Ω

(4) Connect the connector A18 of the transmission control computer ASSY.

NG → Go to Step 4.

OK

2	Check wiring harness and connector (transmission wire - transmission control computer ASSY)

(1) Disconnect the connector A18 of the transmission control computer ASSY.
(2) Disconnect the connector L4 of the transmission wire.
(3) Measure the voltage between the terminals.

Voltage

Inspection terminals	Inspection conditions	Standard value
L4-6 (SR) - chassis ground	IG ON	Less than 1 V

(4) Measure the resistance between the terminals.

Resistance

Inspection terminals	Inspection conditions	Standard value
L4-6 (SR) - A18-15 (SR)	Always	Less than 1 Ω
L4-6 (SR) and A18-15 (SR) - chassis ground	Always	10 k Ωor more

(5) Connect the connector L4 of the transmission wire.
(6) Connect the connector A18 of the transmission control computer ASSY.

NG → Repair or replacement of wiring harness or connector

OK

3	Replacement of transmission control computer ASSY

(1) Replace the transmission control computer ASSY. (Refer to AT - 322)

Next

AT unit correction (refer to AT - 19)

4	Check of transmission 3 way solenoid ASSY (SR) unit

(1) Remove the transmission 3 way solenoid ASSY (SR). (Refer to AT - 179)
(2) Check the transmission 3 way solenoid ASSY (SR) unit. (Refer to AT - 184)

NG → Replacement of the automatic transmission 3 way solenoid ASSY (SR) (Refer to AT - 179)

AT

OK

Repair or replacement of transmission wire (refer to AT - 171)

DTC	P160A	RAM error

Circuit description

The value calculated by the transmission control computer ASSY is compared with the data recorded after the calculation when IG is ON, and when they do not match, DTC is detected and continuity to all solenoids is stopped (locked to 4th gear).

DTC No. SAE/TCCS	DTC detecting condition 1.Diagnosis condition 2.Abnormal condition 3.Abnormal period 4.Other	Inspection parts
P160A	1. IG ON 2. Transmission control computer ASSY inside malfunction When information recorded in transmission control computer ASSY varies in the same IG ON 3. - 4. 1 trips	• Transmission control computer ASSY

Monitor description

AT

TCM observes inner operation. If a defect is found in inner operation, TCM turns on MIL and records diagnostic codes.

MONITOR STRATEGY

Applicable diagnostic codes	P160A: RAM error
Required sensor / component	TCM
Operation frequency	Once per driving cycle
Period	1 time
MIL operation	Immediate
Operation order	None

TYPICAL ENABLING CONDITIONS

Ignition switch	OFF to ON

TYPICAL MALFUNCTION THRESHOLDS

The value written to RAM is different from the read value.	Yes

Inspection steps

1	Replacement of transmission control computer ASSY

(1) Replace the transmission control computer ASSY. (Refer to AT - 322)

Next

AT unit correction (refer to AT - 19)

DTC	P1817	Manual switch system (Low)

Circuit description

The transmission control computer ASSY detects M position based on signals from the manual mode switch ASSY.

DTC No. SAE/TCCS	DTC detecting condition 1.Diagnosis condition 2.Abnormal condition 3.Abnormal period 4.Other	Inspection parts
P1817	1. Shift position sensor is normal and learning control is not prohibited. 2. M switch is ON when select lever is in P, N, or R position 3. Continuing 2 seconds 4. 1 trips	• Manual mode switch ASSY • Wiring harness and connector • Transmission control computer ASSY

Circuit figure

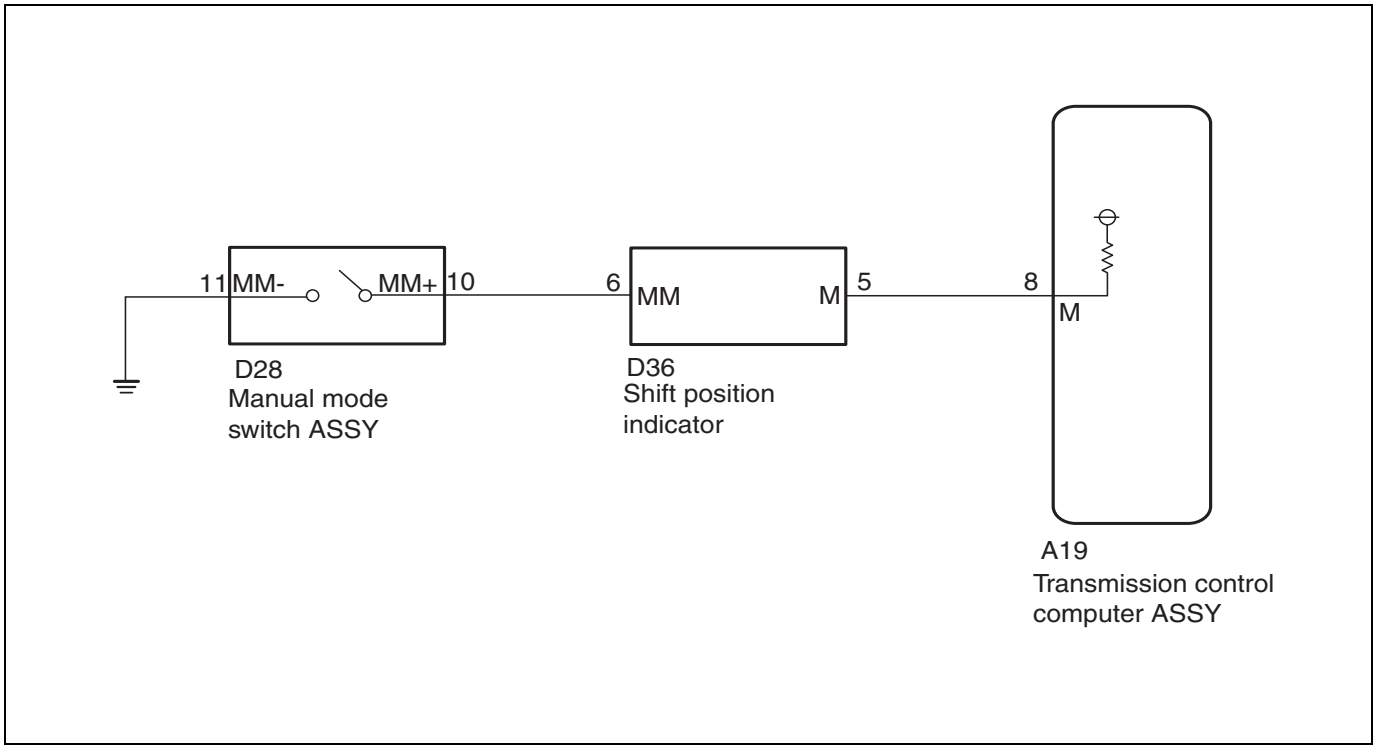

AT

Inspection steps

NOTE:

Read the freeze frame data using the SSM4. A part of the engine running conditions under which the engine trouble occurred is recorded in the freeze frame data, which is useful for troubleshooting.

1	Manual mode switch ASSY check

(1) Disconnect the connector A19 of the transmission control computer ASSY.

(2) Measure the resistance between the terminals.

Resistance

Inspection terminals	Inspection conditions	Standard value
A19-8 (M) - chassis ground	Select lever in M position	Less than 1 Ω

Inspection terminals	Inspection conditions	Standard value
A19-8 (M) - chassis ground	Select lever in any other than M position	10 k Ωor more

(a) Connect the connector A19 of the transmission control computer ASSY.

NG → Go to Step 4.

OK

2	Check wiring harness and connector (manual mode switch ASSY - shift position indicator)

(1) Disconnect the connector D36 of the shift position indicator.
(2) Disconnect the connector D28 of the manual mode switch ASSY.
(3) Measure the resistance between the terminals.

Resistance

Inspection terminals	Inspection conditions	Standard value
D36-6 (MM) - D28-10 (MM+)	Always	Less than 1 Ω
D36-6 (MM) - chassis ground	Always	10 k Ωor more
D28-10 (MM+) - chassis ground	Always	10 k Ωor more

(4) Connect the connector D28 of the manual mode switch ASSY.
(5) Connect the connector D36 of the shift position indicator.

NG → Repair or replacement of wiring harness or connector

OK

3	Replacement of transmission control computer ASSY

(1) Replace the transmission control computer ASSY. (Refer to AT - 322)

Next

AT unit correction (refer to AT - 19)

4	Check of manual mode switch ASSY unit

(1) Disconnect the connector D28 of the manual mode switch.
(2) Measure the resistance of the terminals.

Resistance

Inspection terminals	Inspection conditions	Standard value
D28-10 (MM+) - D28-11 (MM-)	Select lever in M position	Less than 1 Ω
	Select lever in any other than M position	10 k Ωor more

(3) Connect the connector D28 of the manual mode switch.

AT

NG → Replace of manual mode switch ASSY (refer to AT - 199)

OK

5	Check wiring harness and connector (transmission control computer ASSY - shift position indicator)

(1) Disconnect the connector A19 of the transmission control computer ASSY.
(2) Disconnect the connector D36 of the shift position indicator.
(3) Measure the resistance between the terminals.

Resistance

Inspection terminals	Inspection conditions	Standard value
D36-5 (M) - A19-8 (M)	Always	Less than 1 Ω
D36-5 (M) - chassis ground	Always	10 k Ωor more
A19-8 (M) - chassis ground	Always	10 k Ωor more

(4) Connect the connector D36 of the shift position indicator.
(5) Connect the connector A19 of the transmission control computer ASSY.

NG → Repair or replacement of wiring harness or connector

OK

Replacement of shift position indicator (refer to AT - 199)

AT

DTC	P2714	Pressure Control Solenoid "D" Performance/Stuck Off

DTC	P0894	Transmission Component Slipping

Description of functions

The line pressure control solenoid ASSY (SLT) is controlled according to duty ratio which is predetermined by the transmission control computer ASSY based on signals from the accelerator position sensor and the transmission revolution sensor (NT, SP2). This adjusts line pressure to meet the throttle opening angle and engine output. The transmission control computer ASSY detects slippage of clutch, etc. based on the revolution speed of the transmission revolution sensor (NT, SP2).

DTC No. SAE/TCCS	DTC detecting condition 1. Diagnosis condition 2. Abnormal status 3. Abnormal period 4. Others	Inspection parts
P2714	1. Driving in D position with ATF temperature at 10°C or higher and the coolant temperature at 40°C or higher (however, no malfunction is detected in transmission 3 way solenoid ASSY (S1, S2, S3, S4, SR), clutch control solenoid No.1 (SL1, SL2), line pressure control solenoid ASSY (SLT), transmission revolution sensor (NT, SP2), neutral start switch, CAN bus, engine ECM communication, engine coolant temperature sensor, air flow sensor, electronic throttle control, and accelerator pedal sensor). 2. Cumulative heating value of C1 clutch is the predetermined value or larger. 3. - 4. 2 trips	• Line pressure control solenoid ASSY (SLT) • Transmission valve body ASSY • Torque converter ASSY • Automatic transmission ASSY
P0894	1. Driving in D position with ATF temperature at 10°C or higher and the coolant temperature at 40°C or higher (however, no malfunction is detected in transmission 3 way solenoid ASSY (S1, S2, S3, S4, SR), clutch control solenoid No.1 (SL1, SL2), line pressure control solenoid ASSY (SLT), transmission revolution sensor (NT, SP2), neutral start switch, CAN bus, engine ECM communication, engine coolant temperature sensor, air flow sensor, electronic throttle control, and accelerator pedal sensor). 2. Any of the following conditions is established. Cumulative heating value of C1 clutch is the predetermined value or larger. Cumulative heating value of C2 clutch is the predetermined value or larger. 3. - 4. 2 trips	• Line pressure control solenoid ASSY (SLT) • Transmission 3 way solenoid ASSY (S1) • Transmission 3 way solenoid ASSY (S2) • Transmission 3 way solenoid ASSY (S3) • Transmission 3 way solenoid ASSY (S4) • Transmission valve body ASSY • Torque converter ASSY • Automatic transmission ASSY

AT

Monitor description

TCM calculates the heat amount absorbed by friction material based on the difference between turbine speed and output shaft speed (slipping clutch). When the amount of heat absorption exceeds a certain value, TCM turns on MIL and outputs diagnostic codes.

CAUTION:

If the vehicle continues driving in such a condition, the clutch burns out and the vehicle cannot be driven.

MONITOR STRATEGY

Applicable diagnostic codes	P2714: Pressure Control Solenoid "D" Performance/Stuck Off P0894: Transmission Component Slipping
Required sensor / component	Line pressure control solenoid ASSY (SLT)
Operation frequency	Consecutive
Period	1 count
MIL operation	2nd driving cycle
Operation order	None

TYPICAL ENABLING CONDITIONS

The following items are common to the all conditions below.

Battery voltage	10.5V or more
Engine speed	400 r/min or more
Fail safe mode (solenoid power supply shut down)	Non-active
Transmission revolution sensor (NT) (P0717)	No defect

Transmission revolution sensor (SP2) (P0722)	No defect
Transmission 3 way solenoid ASSY (S1) (P0973, P0974)	No defect
Transmission 3 way solenoid ASSY (S2) (P0976, P0977)	No defect
Transmission 3 way solenoid ASSY (S3) (P0979, P0980)	No defect
Transmission 3 way solenoid ASSY (S4) (P0982, P0983)	No defect
Transmission 3 way solenoid ASSY (SR) (P0985, P0986)	No defect
Clutch control solenoid No.1 (SL1) (P0961, P0962, P0963)	No defect
Clutch control solenoid No.1 (SL2) (P0965, P0966, P0967)	No defect
Line pressure control solenoid ASSY (SLT) (P2720, P2721, P2719)	No defect
Oil temperature sensor (P0711, P0712, P0713)	No defect
Neutral start switch ASSY (P0707, P0708)	No defect
CAN bus OFF (U0073)	No defect
ECM without ID (U0100)	No defect
ECM communication counter (U0401)	No defect
Coolant temperature sensor	No defect
Engine torque signal	No defect
Throttle opening angle sensor	No defect
Accelerator pedal opening angle sensor	No defect
Range position	D
Time elapsed after D range selection	4 seconds or more
Engine coolant temperature	40°C or more

AT

TYPICAL MALFUNCTION THRESHOLDS

P2714: Pressure Control Solenoid "D" Performance/Stuck Off

Either of the following conditions must be satisfied: ON malfunction (A), (B), (C), (D), (E), (F), (G), (H) or (I)

ON malfunction (A)

C1 clutch heat generation total	Standard value

ON malfunction (B)

6th error	Detected

ON malfunction (C)

Transmission 3 way solenoid ASSY (S1) (stuck OFF)	Detected

ON malfunction (D)

Transmission 3 way solenoid ASSY (S2) (stuck OFF)	Detected

ON malfunction (E)

Transmission 3 way solenoid ASSY (S3) (stuck ON)	Detected

ON malfunction (F)

Transmission 3 way solenoid ASSY (S4) (stuck OFF)	Detected

ON malfunction (G)

1-2 shift valve (spring compression)	Detected

ON malfunction (H)

Line pressure control solenoid ASSY (SLT) (AT slip)	Detected

ON malfunction (I)

Clutch control solenoid No.1 (SL2) (stuck ON)	Detected

P0894: Transmission Component Slipping

When both of the following conditions are established: AT slip (A) or (B)

AT slip (A)

C1 clutch heat generation total	Standard value

AT slip (B)

C2 clutch heat generation total	Standard value
Actual gear when judged as SLT malfunction	Unidentified

Circuit figure

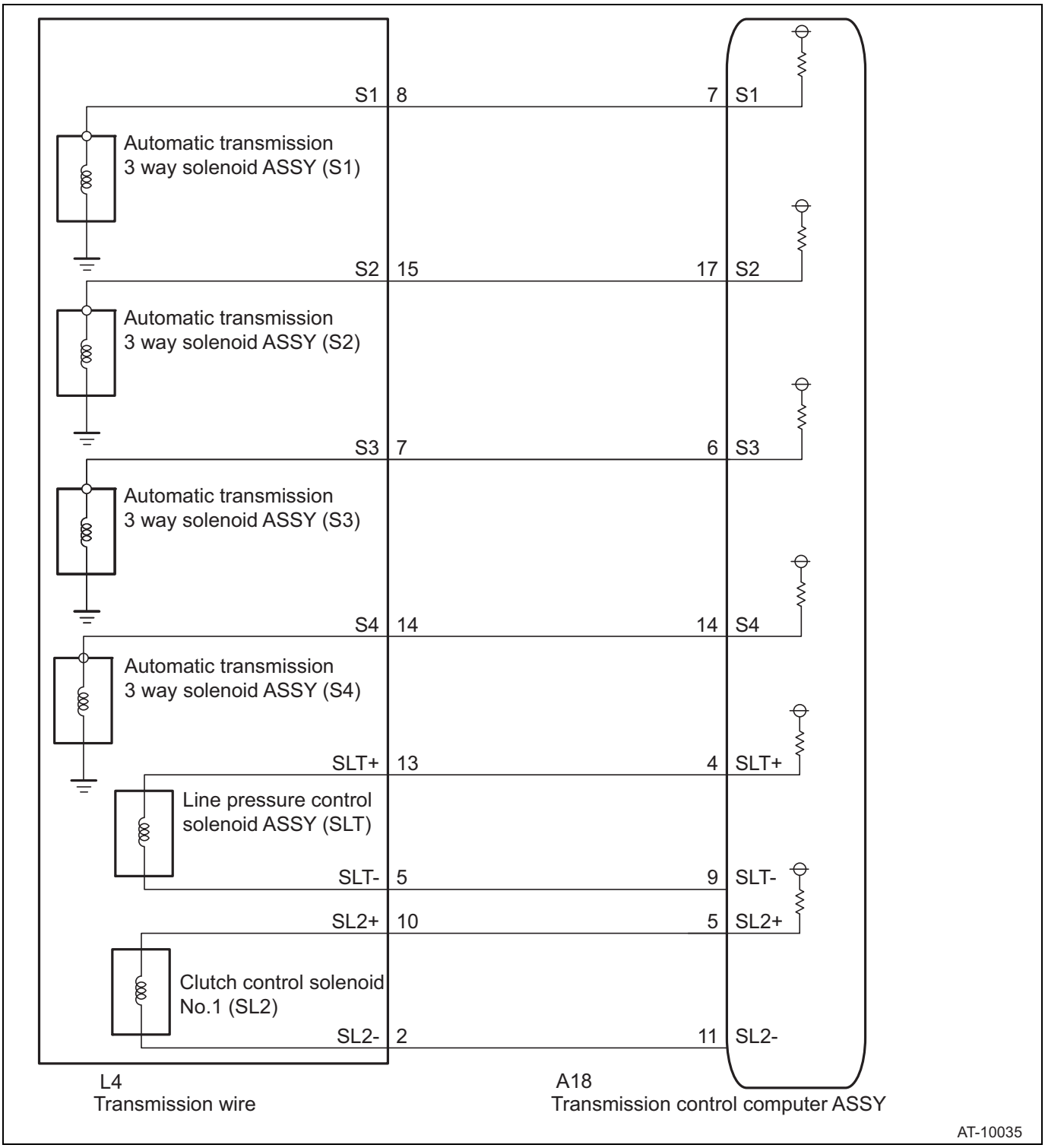

AT

Inspection steps

1	Read the diagnostic code

(1) Follow the SSM4 on-screen instructions to check the diagnostic codes. (Refer to AT - 17)

Result

Result	Go to
P2714 and P0894, or only P0894 is output.	A
P2714 or P0894 and other diagnostic codes are output.	B

B → Progress to the relevant diagnosis code chart (Refer to AT - 11)

A

2	Line pressure check

CAUTION:
- Wash the equipment and hoses with appropriate detergent before and after measurement.
- Always perform the inspection after the engine check and adjustment.
- Perform the inspection at an oil temperature (60 to 90°C) in normal driving condition.
- Perform the inspection with the A/C OFF.
- Do not perform the inspection continuously for 5 seconds or more at stall. (Time from the accelerator full close to full open, stall speed reading and the accelerator full close)
- After performing the stall test, be sure to cool down the engine for at least 1 minute with the select lever set in P or N position, and at an idle speed of 1200 r/min or less.
- If the stall speed is higher than the specified range, finish the stall test in as short a time as possible, in order to prevent the automatic transmission from being damaged.
- Perform the stall test in normal mode.

(1) Remove the under cover No.1.
(2) Remove the under cover No.2.
(3) Remove the exhaust pipe ASSY FR.
(4) Attach the SST on the transmission.
SST 18681AA040, 498897700, 498575400

CAUTION:
- Use 18681AA040 with genuine O-ring (17006AA000) attached.
- Route the hose so that it does not contact the exhaust pipe.

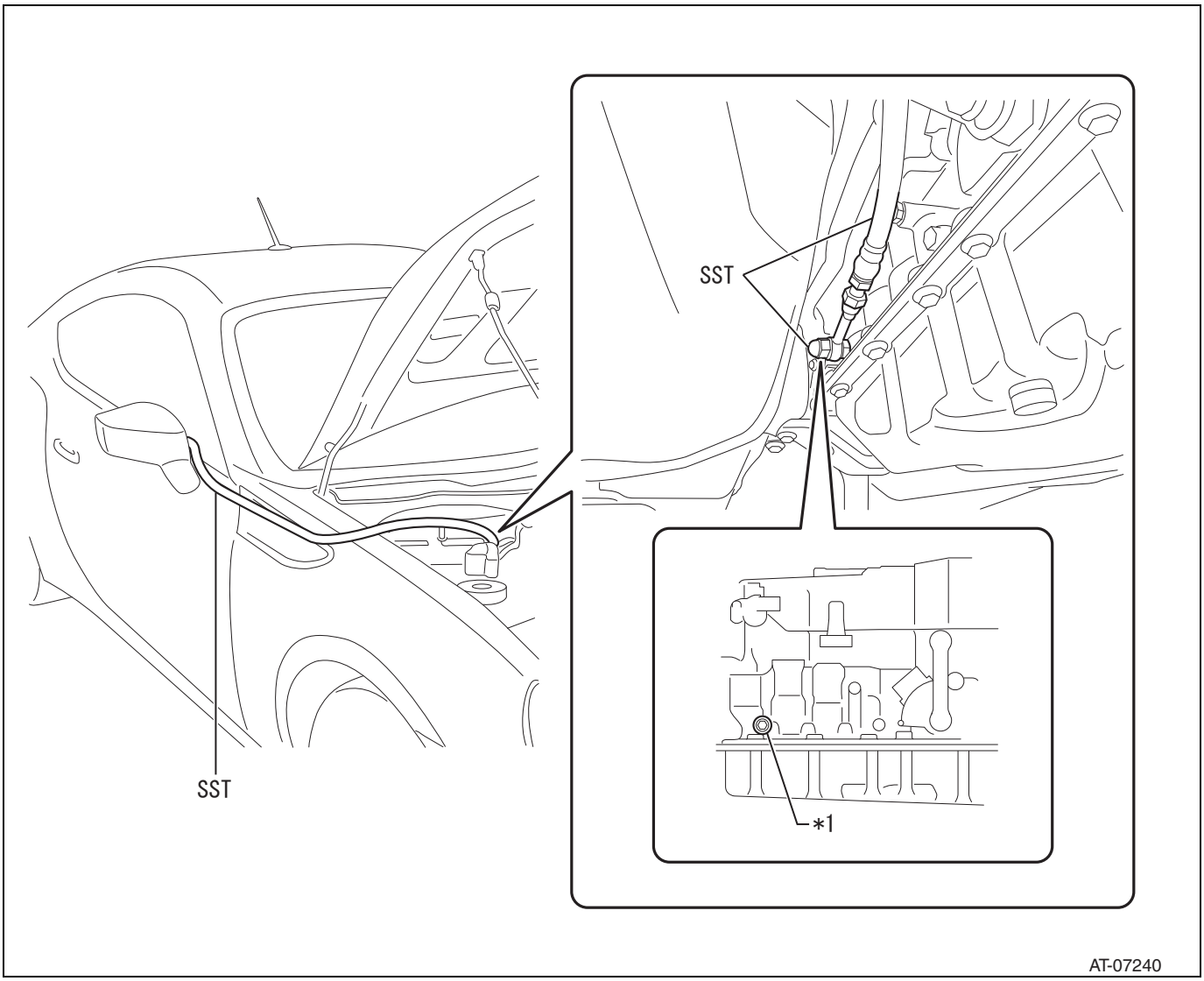

Captions in illustration

*1	Test plug

(5) Install the center exhaust pipe.
(6) Firmly apply the parking brake and set the wheel stoppers.
(7) Remove the test plug, install the gauge and start the engine.
(8) Firmly depress the brake pedal with left foot and shift to D or R position, then check the hydraulic pressure at idling and stalling.

Standard value

Shift position	While idling [MPa {kgf/cm^2}]	While stalling [MPa {kgf/cm^2}]
D position	0.35 to 0.43 {3.6 to 4.4}	1.20 to 1.38 {12.2 to 14.0}
R position	0.76 to 0.95 {7.7 to 9.7}	1.41 to 1.63 {14.4 to 16.6}

NOTE:
When there is an open or short circuit in the line pressure control solenoid ASSY (SLT) system, the line pressure reaches the maximum.

NG → Go to Step 16.

OK

3	Shift position check

CAUTION:
- Perform the inspection at an oil temperature (60 to 90°C) in normal driving condition.
- Turn the A/C and the cruise control OFF.

(1) Drive in M position and check the shift position.
WARNING:
Confirm the safety on the road.
Criteria: Shift position changes.

Result

System status			Gear indication position of transmission control computer ASSY						Go to
			1st	2nd	3rd	4th	5th	6th	
	Transmission 3 way solenoid ASSY (S1)	Stuck OFF	1st	2nd	3rd	4th	5th	Neutral	A
	Transmission 3 way solenoid ASSY (S2)	Stuck OFF	3rd	3rd	3rd	4th	5th	5th	B
	Transmission 3 way solenoid ASSY (S3)	Stuck ON	1st	2nd	3rd	3rd	Neutral	Neutral	C
		Stuck OFF	3rd	6th	4th	4th	5th	6th	
	Transmission 3 way solenoid ASSY (S4)	Stuck ON*	1st	2nd	3rd	4th	5th	6th	D
		Stuck OFF	1st	2nd	3rd	4th	4th	4th	E
Normal			1st	2nd	3rd	4th	5th	6th	D

NOTE:
*: When transmission 3 way solenoid ASSY (S4) sticks to ON, the shift is normal.

AT

B	Go to Step 7.
C	Go to Step 10.
D	Go to Step 16.
E	Go to Step 13.

A

4	Check of transmission 3 way solenoid ASSY (S1) unit

(1) Remove the transmission 3 way solenoid ASSY (S1). (Refer to AT - 179)
(2) Check the transmission 3 way solenoid ASSY (S1) unit. (Refer to AT - 184)

NG	Replacement of the transmission 3 way solenoid ASSY (S1) (Refer to AT - 179)

OK

5	Check of transmission valve body ASSY unit

(1) Check the transmission valve body ASSY. (Refer to AT - 176)

Criteria: There is no malfunction and foreign objects on the solenoid installation portions.

NG → Replacement of transmission valve body ASSY (refer to AT - 176)

OK

6	Check of torque converter ASSY unit

(1) Check the torque converter ASSY. (Refer to AT - 320)
Criteria: There is no malfunction and foreign objects on the solenoid installation portions.

NG → Replacement of torque converter ASSY (refer to AT - 220)

OK

Replacement of automatic transmission ASSY (refer to AT - 220)

7	Check of transmission 3 way solenoid ASSY (S2) unit

(1) Remove the transmission 3 way solenoid ASSY (S2). (Refer to AT - 179)
(2) Check the transmission 3 way solenoid ASSY (S2) unit. (Refer to AT - 180)

NG → Replacement of the transmission 3 way solenoid ASSY (S2) (Refer to AT - 179)

OK

8	Check of transmission valve body ASSY unit

(1) Check the transmission valve body ASSY. (Refer to AT - 176)
Criteria: There is no malfunction and foreign objects on the solenoid installation portions.

NG → Replacement of transmission valve body ASSY (refer to AT - 176)

OK

9	Check of torque converter ASSY unit

(1) Check the torque converter ASSY. (Refer to AT - 320)
Criteria: Torque converter ASSY is normal.

NG → Replacement of torque converter ASSY (refer to AT - 220)

OK

Replacement of automatic transmission ASSY (refer to AT - 220)

AT

10	Check of transmission 3 way solenoid ASSY (S3) unit

(1) Remove the transmission 3 way solenoid ASSY (S3). (Refer to AT - 180)
(2) Check the transmission 3 way solenoid ASSY (S3) unit. (Refer to AT - 185)

NG → Replacement of the transmission 3 way solenoid ASSY (S3) (Refer to AT - 180)

OK

11	Check of transmission valve body ASSY unit

(1) Check the transmission valve body ASSY. (Refer to AT - 176)
Criteria: There is no malfunction and foreign objects on the solenoid installation portions.

NG → Replacement of transmission valve body ASSY (refer to AT - 176)

OK

12	Check of torque converter ASSY unit

(1) Check the torque converter ASSY. (Refer to AT - 220)
Criteria: Torque converter ASSY is normal.

NG → Replacement of torque converter ASSY (refer to AT - 220)

OK

Replacement of automatic transmission ASSY (refer to AT - 220)

13	Check of transmission 3 way solenoid ASSY (S4) unit

(1) Remove the transmission 3 way solenoid ASSY (S4). (Refer to AT - 179)
(2) Check the transmission 3 way solenoid ASSY (S4) unit. (Refer to AT - 185)

NG → Replacement of the transmission 3 way solenoid ASSY (S4) (Refer to AT - 179)

OK

14	Check of transmission valve body ASSY unit

(1) Check the transmission valve body ASSY. (Refer to AT - 176)
Criteria: There is no malfunction and foreign objects on the solenoid installation portions.

AT

NG → Replacement of transmission valve body ASSY (refer to AT - 176)

OK

15	Check of torque converter ASSY unit

(1) Check the torque converter ASSY. (Refer to AT - 320)
Criteria: Torque converter ASSY is normal.

NG → Replacement of torque converter ASSY (refer to AT - 220)

OK

Replacement of automatic transmission ASSY (refer to AT - 220)

16	Check of line pressure control solenoid ASSY (SLT) unit

(1) Check the line pressure control solenoid ASSY (SLT) unit. (Refer to AT - 183)

NG → Repair or replacement of transmission valve body ASSY (refer to AT - 176)

AT

OK

17	Check of transmission valve body ASSY unit

(1) Check the transmission valve body ASSY. (Refer to AT - 176)
Criteria: There is no malfunction and foreign objects on the solenoid installation portions.

NG → Replacement of transmission valve body ASSY (refer to AT - 176)

OK

18	Check of torque converter ASSY unit

(1) Check the torque converter ASSY. (Refer to AT - 320)
Criteria: Torque converter ASSY is normal.

NG → Replacement of torque converter ASSY (refer to AT - 220)

OK

Replacement of automatic transmission ASSY (refer to AT - 220)

DTC	P2719	Pressure Control Solenoid "D" Control Circuit Range/ Performance

DTC	P2720	Pressure Control Solenoid "D" Control Circuit Low

DTC	P2721	Pressure Control Solenoid "D" Control Circuit High

Circuit description

The line pressure control solenoid ASSY (SLT) is controlled according to the duty signal which is predetermined by the transmission control computer ASSY based on signals from the accelerator position sensor and the transmission revolution sensor (SP2, NT). This adjusts line pressure to meet the throttle opening angle and engine output. The transmission control computer ASSY detects slippage of clutch, etc. based on the revolution speed of the transmission revolution sensor (SP2, NT).

DTC No. SAE/TCCS	DTC detecting condition 1. Diagnosis condition 2. Abnormal status 3. Abnormal period 4. Others	Inspection parts
P2719	1. Learning control is not prohibited. 2. The cumulative difference between line pressure control solenoid ASSY (SLT) operation set current and operation feedback current is 12 A or more. 3. Abnormal status of No.2 is detected 2 times consecutively. 4. 1 trips	• Line pressure control solenoid ASSY (SLT) • Transmission wire • Wiring harness or connector • Transmission control computer ASSY
P2720	1. Learning control is not prohibited. 2. Operation feedback voltage is less than 0.018 V after line pressure control solenoid ASSY is turned OFF and 1 second or more has passed. 3. 100 ms or more durations are detected 5 times consecutively. 4. 1 trips	• Wiring harness and connector • Transmission wire • Line pressure control solenoid ASSY (SLT) • Transmission control computer ASSY
P2721	1. Learning control is not prohibited. 2. Operation feedback voltage is more than 0.257 V after line pressure control solenoid ASSY is turned ON and 1 second or more has passed. 3. 100 ms or more durations are detected 5 times consecutively. 4. 1 trips	• Wiring harness and connector • Transmission wire • Line pressure control solenoid ASSY (SLT) • Transmission control computer ASSY

AT

Monitor description

If open or short circuit is detected in the circuit, TCM recognizes it as a malfunction.

TCM turns on MIL and records the diagnostic codes.

MONITOR STRATEGY

Applicable diagnostic codes	P2719: Pressure Control Solenoid "D" Control Circuit Range/ Performance P2720: Pressure Control Solenoid "D" Control Circuit Low P2721: Pressure Control Solenoid "D" Control Circuit High
Required sensor / component	Line pressure control solenoid ASSY (SLT)
Operation frequency	Consecutive
Period	P2719: 2 count P2720: 0.1 seconds x 5 times P2721: 0.1 seconds x 5 times
MIL operation	Immediate
Operation order	None

TYPICAL ENABLING CONDITIONS

P2719: Pressure Control Solenoid "D" Control Circuit Range/Performance

Battery voltage	10.2 V or more
Above condition is established	2 seconds or more
Fail safe mode (solenoid power supply shut down)	Non-active
Line pressure control solenoid ASSY (SLT) (P2720, P2721)	No defect
Check the feedback terminal voltage.	0.257V or less
Battery voltage	10.5V or more
Above condition (battery voltage) is established	0.5 seconds or more

P2720: Pressure Control Solenoid "D" Control Circuit Low

Battery voltage	10.2 V or more
Above condition is established	2 seconds or more
Fail safe mode (solenoid power supply shut down)	Non-active
Line pressure control solenoid ASSY (SLT) (P2719)	No defect

P2721: Pressure Control Solenoid "D" Control Circuit High

Battery voltage	10.2 V or more
Above condition is established	2 seconds or more
Fail safe mode (solenoid power supply shut down)	Non-active
Line pressure control solenoid ASSY (SLT) (P2719)	No defect

TYPICAL MALFUNCTION THRESHOLDS

AT

P2719: Pressure Control Solenoid "D" Control Circuit Range/Performance

Cumulative total of differences between target current and feedback current (Sum_ie)	12 A or more
Sum_ie is updated every 25 milliseconds. When 1 or more conditions below are established, Sum_ie is deleted. 1. The permission condition is not established. 2. When the current difference (ie) between target and feedback is -50 mA to 50 mA 3. Positive and negative of ie are reversed.	

P2720: Pressure Control Solenoid "D" Control Circuit Low

Check the feedback terminal voltage.	0.018 V or less
Time elapsed after recovery from battery short circuit	1 second or more

P2721: Pressure Control Solenoid "D" Control Circuit High

Check the feedback terminal voltage.	0.257V or more
Time elapsed after recovery from short circuit to ground/open circuit	1 second or more

Circuit figure

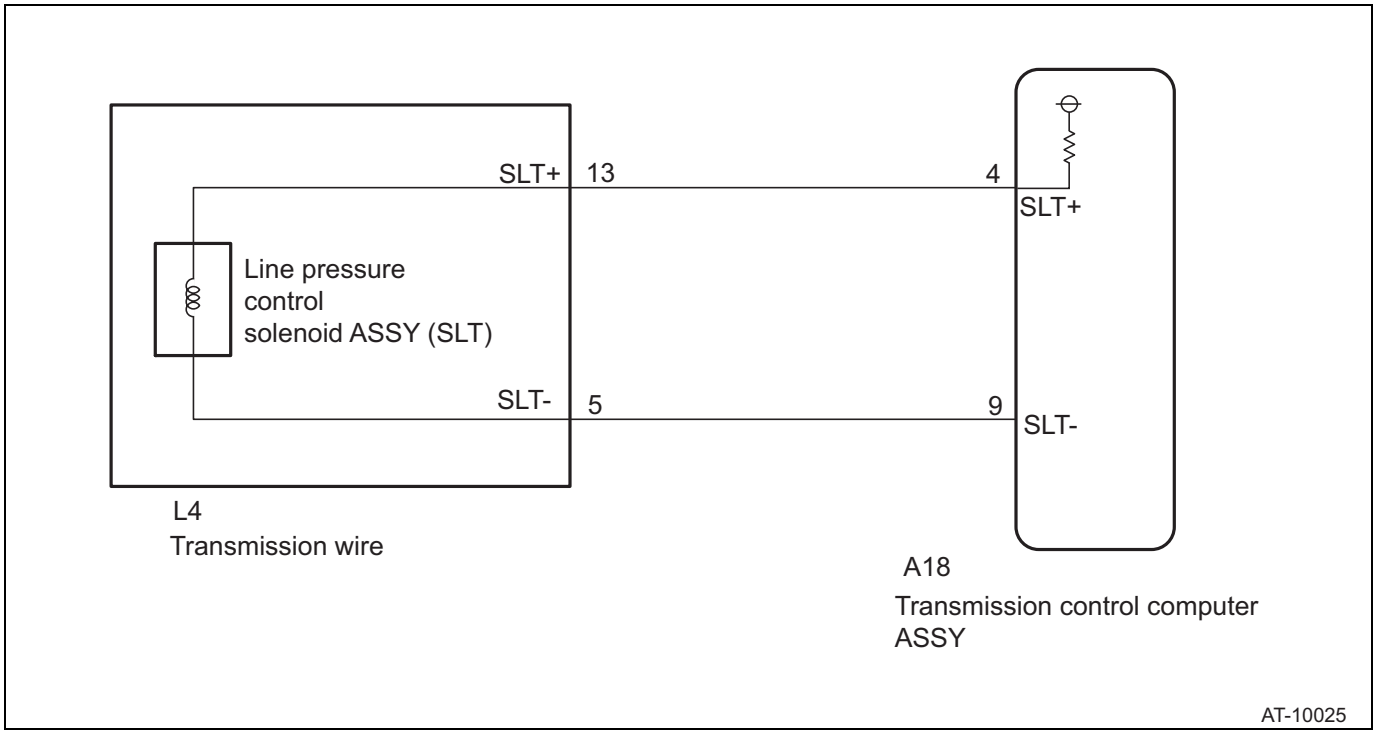

Inspection steps

AT

1	Wiring harness and connector check

(1) Disconnect the connector A18 of the transmission control computer ASSY.
(2) Measure the resistance between the terminals.

Resistance

Inspection terminals	Inspection conditions	Standard value
A18-4 (SLT+) - A18-9 (SLT-)	20°C	5.0 to 5.6Ω

(3) Connect the connector A18 of the transmission control computer ASSY.

NG → Go to Step 4.

OK

2	Check wiring harness and connector (transmission wire - transmission control computer)

(1) Disconnect the connector A18 of the transmission control computer ASSY.
(2) Disconnect the connector L4 of the transmission wire.
(3) Measure the resistance of the vehicle side connector. (For terminal arrangement, refer to AT - 24.)

Resistance

Inspection terminals	Inspection conditions	Standard value
A18-4 (SLT+) - L4-13 (SLT+)	Always	Less than 1 Ω

Inspection terminals	Inspection conditions	Standard value
A18-9 (SLT-) - L4-5 (SLT-)	Always	Less than 1 Ω

(4) Measure the voltage between the terminals.

Voltage

Inspection terminals	Inspection conditions	Standard value
A18-4 (SLT+) - chassis ground	IG ON	1 V or less
A18-9 (SLT-) - chassis ground	IG ON	1 V or less

(5) Connect the connector L4 of the transmission wire.

(6) Connect the connector A18 of the transmission control computer ASSY.

NG → Repair or replacement of wiring harness or connector

OK

3	Replacement of transmission control computer ASSY

(1) Replace the transmission control computer ASSY. (Refer to AT - 322)

Next

AT

AT unit correction

4	Check of line pressure control solenoid ASSY (SLT) unit

(1) Check the line pressure control solenoid ASSY (SLT) unit. (Refer to AT - 183)

NG → Repair or replacement of transmission valve body ASSY (refer to AT - 176)

OK

Repair or replacement of transmission wire (refer to AT - 171)

DTC	P2757	Torque Converter Clutch Pressure Control Solenoid Control Circuit Performance/Stuck Off

DTC	P2758	Torque Converter Clutch Pressure Control Solenoid Control Circuit Stuck On

Circuit description

The lock-up control solenoid (SLU) is controlled by the duty signal which is predetermined by the transmission control computer ASSY. Then, lock-up and flex lock-up control is performed.

DTC No. SAE/TCCS	DTC detecting condition 1.Diagnosis condition 2.Abnormal condition 3.Abnormal period 4.Other	Inspection parts
P2757	1. All of the following conditions are established. Learning control is not prohibited. 4 seconds or more passed after shifting to D position. Engine coolant temperature is 40°C or more. ATF temperature is 20°C or more. Gear range is 4th or higher. No malfunction is detected in transmission 3 way solenoid ASSY (S1, S2, S3, S4, SR), clutch control solenoid No.1 (SL1, SL2), lock-up control solenoid (SLU), line pressure control solenoid ASSY (SLT), transmission revolution sensor (NT, SP2), neutral start switch ASSY, CAN bus, engine ECM communication, engine coolant temperature, electronic throttle control, and accelerator pedal. 2. All of the following conditions are established. 3 seconds or more passed after hydraulic command value of lock-up control solenoid (SLU) exceeds the specified value. Engine speed is higher than turbine revolution speed by 70 r/min or more. Gear range is 4th or higher. Throttle opening angle is the specification or more. Vehicle speed is 22km/h {14 MPH} or more 3. 2 seconds or more passed for all conditions of item 2 4. 2 trips	• Transmission wire • Lock-up control solenoid ASSY (SLU) • Transmission control computer ASSY • Torque converter ASSY
P2758	1. All of the following conditions are established. Learning control is not prohibited. 4 seconds or more passed after shifting to D position. Engine coolant temperature is 40°C or more. ATF temperature is 20°C or more. Gear range is 4th or higher. No malfunction is detected in transmission 3 way solenoid ASSY (S1, S2, S3, S4, SR), clutch control solenoid No.1 (SL1, SL2), lock-up control solenoid (SLU), line pressure control solenoid ASSY (SLT), transmission revolution sensor (NT, SP2), neutral start switch ASSY, CAN bus, engine ECM communication, engine coolant temperature, electronic throttle control, and accelerator pedal. 2. All of the following conditions are established. 3 seconds or more passed after hydraulic command value of lock-up control solenoid (SLU) drops to less than the specified value. Difference between engine speed and turbine revolution speed is less than 35 r/min. Gear range is 4th or higher. Throttle opening angle is the specification or more. Vehicle speed is 22km/h {14 MPH} or more 3. After 2 or more seconds passed for all conditions of item 2, vehicle experiences the speed of less than 10 km/h {6 MPH}, then 2 or more seconds passed for all conditions of item 2 again. 4. 2 trips	• Transmission wire • Lock-up control solenoid ASSY (SLU) • Transmission control computer ASSY • Torque converter ASSY

AT

Monitor description

The torque converter lock-up is controlled by TCM based on the transmission revolution sensor (NT, SP2), engine r/min, engine load, engine temperature, vehicle speed, transmission temperature, and selected gear. TCM compares engine r/min (NE) with input turbine r/min (NT) to determine the lock-up status of the torque converter. TCM compares input turbine r/min (NT) and output shaft r/min (SP2) to calculate the actual transmission gear. If the condition is appropriate, TCM applies control voltage to the lock-up control solenoid (SLU) and requires "lock up". When the lock-up control solenoid (SLU) turns to ON, it applies pressure to the lock up relay valve to lock the torque converter clutch.

If TCM does not detect lock up after the lock up is requested or detects lock up even though it is not requested, TCM recognizes it as a malfunction of the lock-up control solenoid (SLU) or lock up system performance. TCM turns on MIL and records the diagnostic codes.

MONITOR STRATEGY

Applicable diagnostic codes	P2757: Torque Converter Clutch Pressure Control Solenoid Control Circuit Performance/Stuck Off P2758: Torque Converter Clutch Pressure Control Solenoid Control Circuit Stuck On
Required sensor / component	Lock-up control solenoid ASSY (SLU)
Operation frequency	Consecutive
Period	P2757: 2 seconds P2758: 1.8 seconds, 2 counts (detecting defects again after the vehicle speed becomes less than 10 km/h {6 MPH} after 1 count)
MIL operation	2nd driving cycle
Operation order	None

TYPICAL ENABLING CONDITIONS

AT

The following items are common to the all conditions below.

Battery voltage	10.5V or more
Engine speed	400 r/min or more
Fail safe mode (solenoid power supply shut down)	Non-active
Transmission revolution sensor (NT) (P0717)	No defect
Transmission revolution sensor (SP2) (P0722)	No defect
Transmission 3 way solenoid ASSY (S1) (P0973, P0974)	No defect
Transmission 3 way solenoid ASSY (S2) (P0976, P0977)	No defect
Transmission 3 way solenoid ASSY (S3) (P0979, P0980)	No defect
Transmission 3 way solenoid ASSY (S4) (P0982, P0983)	No defect
Transmission 3 way solenoid ASSY (SR) (P0985, P0986)	No defect
Clutch control solenoid No.1 (SL1) (P0962, P0963, P0961)	No defect
Clutch control solenoid No.1 (SL2) (P0966, P0967, P0965)	No defect
Line pressure control solenoid ASSY (SLT) (P2720, P2721, P2719)	No defect
Lock-up control solenoid (SLU) (P2762, P2763, P2764)	No defect
Neutral start switch ASSY (P0707, P0708)	No defect
Oil temperature sensor (P0711, P0712, P0713)	No defect
CAN bus OFF (U0073)	No defect
ECM without ID (U0100)	No defect
ECM communication counter (U0401)	No defect
Coolant temperature sensor	No defect
Engine torque signal	No defect
Throttle opening angle sensor	No defect
Accelerator pedal opening angle sensor	No defect

Range position	D
Time elapsed after D range selection	4 seconds or more
Engine coolant temperature	40°C or more
Target gear position	4th, 5th, 6th
ATF temperature	20°C or more

TYPICAL MALFUNCTION THRESHOLDS

P2757: Torque Converter Clutch Pressure Control Solenoid Control Circuit Performance/Stuck Off

Lock-up control solenoid indication	513 kPa {5.2 kgf/cm2, 74.4 psi} or more
Above condition is established	3 seconds or more
Engine speed - turbine shaft speed	70 r/min or more
Gear ratio calculated from turbine shaft speed and vehicle speed	4th, 5th, 6th
Throttle opening angle	Refer to MAP A
Vehicle speed	22 km/h {14 MPH} or more

MAP A

Turbine shaft speed (r/min)	1200	1500	3500	5100	5200
Throttle (%)	12.9	13.4	26	39.6	100

P2758: Torque Converter Clutch Pressure Control Solenoid Control Circuit Stuck On

Lock-up control solenoid indication	4 kPa {0.04 kgf/cm2, 0.58 psi} or less
Above condition is established	3 seconds or more
Engine speed - turbine shaft speed	Less than 35 r/min
Gear ratio calculated from turbine shaft speed and vehicle speed	4th, 5th, 6th
Throttle opening angle	Refer to MAP B
Vehicle speed	22 km/h {14 MPH} or more

MAP B

Turbine shaft speed (r/min)	1200	1500	2000	5800	5900
Throttle (%)	8.1	8.2	10	40	100

Circuit figure

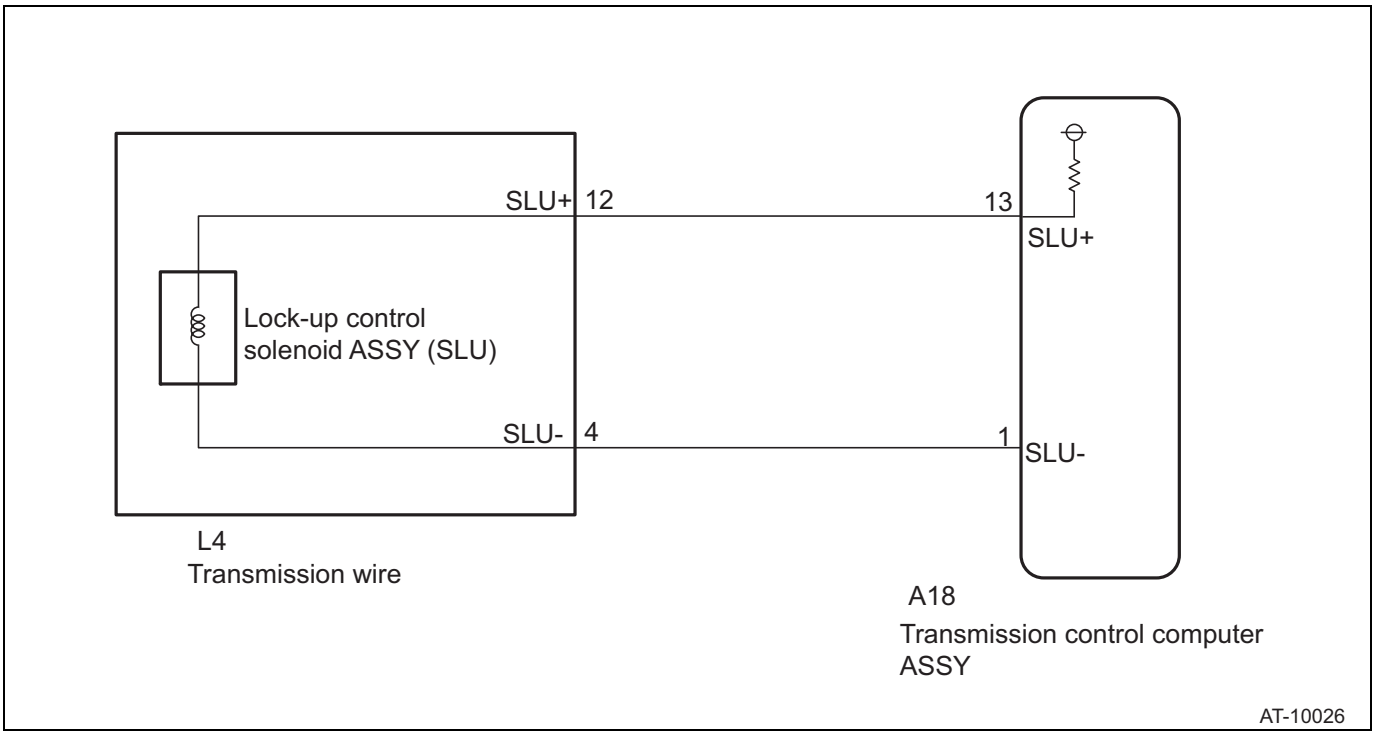

Inspection steps

AT

1	Read the diagnostic code

NOTE:
Refer for checking procedure and precautions of wiring harness and connector
(1) Connect the SSM4 to the DLC3.
(2) Turn the ignition switch to ON.
(3) Read diagnostic codes according to SSM4 display. (Refer to AT - 17)
Result

Result	Go to
P2757 or P2758 is output.	A
P2757 or P2758 and other diagnostic codes are output.	B

B → Related diagnostic code chart

A

2	Check of lock-up control solenoid (SLU) unit

(1) Check the lock-up control solenoid (SLU) unit. (Refer to AT - 183)

NG → Repair or replacement of transmission valve body ASSY (refer to AT - 176)

OK

3	Check of transmission valve body ASSY unit

(1) Check the transmission valve body ASSY. (Refer to AT - 176)
Criteria: There is no malfunction and foreign objects on the solenoid installation portions.

NG → Replacement of transmission valve body ASSY (refer to AT - 176)

OK ↓

4	Check of torque converter ASSY unit

(1) Check the torque converter ASSY. (Refer to AT - 320)
Criteria: Torque converter ASSY is normal.

NG → Replacement of torque converter ASSY (refer to AT - 220)

OK ↓

Replacement of automatic transmission ASSY (refer to AT - 220)

DTC	P2762	Torque Converter Clutch Pressure Control Solenoid Control Circuit Range/Performance

DTC	P2763	Torque Converter Clutch Pressure Control Solenoid Control Circuit High

DTC	P2764	Torque Converter Clutch Pressure Control Solenoid Control Circuit Low

AT

Circuit description
The lock-up control solenoid (SLU) is controlled by the duty signal which is predetermined by the transmission control computer ASSY. Then, lock-up and flex lock-up control is performed.

DTC No. SAE/TCCS	DTC detecting condition 1. Diagnosis condition 2. Abnormal status 3. Abnormal period 4. Others	Inspection parts
P2762	1. Learning control is not prohibited. Lock-up solenoid system circuit (Low/High) is not malfunctioning. 2. The cumulative difference between lock-up control solenoid (SLU) operation set current and operation feedback current is 12 A or more. 3. Abnormal status of No.2 is detected 2 times consecutively. 4. 1 trips	• Lock-up control solenoid (SLU) • Transmission wire • Wiring harness or connector • Transmission control computer ASSY

DTC No. SAE/TCCS	DTC detecting condition 1. Diagnosis condition 2. Abnormal status 3. Abnormal period 4. Others	Inspection parts
P2763	1. Learning control is not prohibited. Lock-up solenoid system circuit (performance) is not malfunctioning. 2. SLU operation feedback voltage is 0.257 V or more after lock-up control solenoid (SLU) is turned OFF and 1 second or more has passed. 3. 100 ms or more durations are detected 5 times consecutively. 4. 1 trips	• Lock-up control solenoid (SLU) • Transmission wire • Wiring harness or connector • Transmission control computer ASSY
P2764	1. Learning control is not prohibited. Lock-up solenoid system circuit (performance) is not malfunctioning. 2. SLU operation feedback voltage is less than 0.018 V after lock-up control solenoid (SLU) is turned ON and 1 second or more has passed. 3. 100 ms or more durations are detected 5 times consecutively. 4. 1 trips	• Lock-up control solenoid (SLU) • Transmission wire • Wiring harness or connector • Transmission control computer ASSY

Monitor description

If open or short circuit is detected in the lock-up control solenoid ASSY (SLU) circuit, TCM recognizes it as a defect. TCM turns on MIL and records the diagnostic code.

AT

MONITOR STRATEGY

Applicable diagnostic codes	P2762: Torque Converter Clutch Pressure Control Solenoid Control Circuit Range/Performance P2763: Torque Converter Clutch Pressure Control Solenoid Control Circuit High P2764: Torque Converter Clutch Pressure Control Solenoid Control Circuit Low
Required sensor / component	Lock-up control solenoid ASSY (SLU)
Operation frequency	Consecutive
Period	P2762: 2 count P2763: 0.1 seconds x 5 times P2764: 0.1 seconds x 5 times
MIL operation	Immediate
Operation order	None

TYPICAL ENABLING CONDITIONS

P2762: Torque Converter Clutch Pressure Control Solenoid Control Circuit Range/Performance

Battery voltage	10.2 V or more
Above condition is established	2 seconds or more
Fail safe mode (solenoid power supply shut down)	Non-active
Lock-up control solenoid (SLU) (P2764, P2763)	No defect
Check the feedback terminal voltage.	0.257V or less
Battery voltage	10.5V or more
Above condition (battery voltage) is established	0.5 seconds or more

P2763: Torque Converter Clutch Pressure Control Solenoid Control Circuit High

Battery voltage	10.2 V or more
Above condition is established	2 seconds or more

Fail safe mode (solenoid power supply shut down)	Non-active
Lock-up control solenoid (SLU) (P2762)	No defect

P2764: Torque Converter Clutch Pressure Control Solenoid Control Circuit Low

Battery voltage	10.2 V or more
Above condition is established	2 seconds or more
Fail safe mode (solenoid power supply shut down)	Non-active
Lock-up control solenoid (SLU) (P2762)	No defect

TYPICAL MALFUNCTION THRESHOLDS

P2762: Torque Converter Clutch Pressure Control Solenoid Control Circuit Range/Performance

Cumulative total of differences between target current and feedback current (Sum_ie)	12 A or more
Sum_ie is updated every 25 milliseconds. When 1 or more conditions below are established, Sum_ie is deleted. 1. The permission condition is not established. 2. When the current difference (ie) between target and feedback is -50 mA to 50 mA 3. Positive and negative of ie are reversed.	

P2763: Torque Converter Clutch Pressure Control Solenoid Control Circuit High

Check the feedback terminal voltage.	0.257V or more
Time elapsed after recovery from battery short circuit	1 second or more

P2764: Torque Converter Clutch Pressure Control Solenoid Control Circuit Low

Check the feedback terminal voltage.	0.018 V or less
Time elapsed after recovery from short circuit to ground/open circuit	1 second or more

AT

Circuit figure

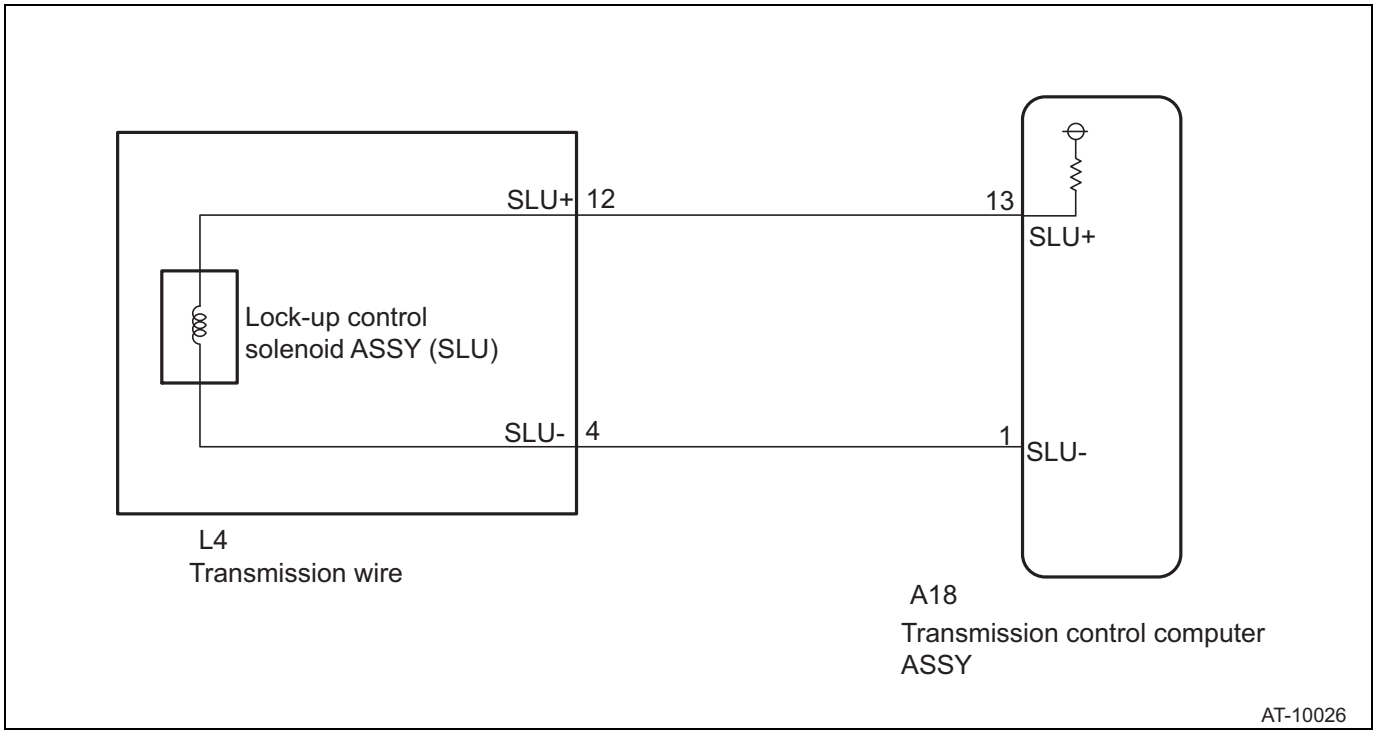

Inspection steps

1	Transmission wire unit check (lock-up control solenoid (SLU))

(1) Disconnect the connector L4 of the transmission wire.
(2) Measure the resistance between the terminals.

Resistance

Inspection terminals	Inspection conditions	Standard value
L4-12 (SLU+) - L4-4 (SLU-)	20°C	5.0 to 5.6 Ω
L4-12 (SLU+) - chassis ground	Always	10 k Ωor more
L4-4 (SLU-) - chassis ground	Always	10 k Ωor more

(3) Connect the connector L4 of the transmission wire.

NG → Go to Step 4.

OK

2	Check wiring harness and connector (transmission wire - transmission control computer)

(1) Disconnect the connector A18 of the transmission control computer ASSY.
(2) Measure the resistance between the terminals.

Resistance

Inspection terminals	Inspection conditions	Standard value
A18-13 (SLU+) - A18-1 (SLU-)	20°C	5.0 to 5.6Ω
A18-13 (SLU+) - chassis ground	Always	10 k Ωor more
A18-1 (SLU-) - chassis ground	Always	10 k Ωor more

(3) Connect the connector A18 of the transmission control computer ASSY.

NG → Repair or replacement of wiring harness or connector

OK

3	Replacement of transmission control computer ASSY

(1) Replace the transmission control computer ASSY. (Refer to AT - 322)

Next

AT unit correction (refer to AT - 19)

4	Check of lock-up control solenoid (SLU) unit

(1) Check the lock-up control solenoid (SLU) unit. (Refer to AT - 183)

NG → Repair or replacement of transmission valve body ASSY (refer to AT - 176)

OK

Repair or replacement of transmission wire (refer to AT - 171)

DTC	U0073	Control Module Communication Bus "A" Off
DTC	U0401	Invalid Data Received From ECM/PCM "A"
DTC	U0416	Invalid Data Received From Vehicle Dynamics Control Module
DTC	U0422	Invalid Data Received From Body Control Module
DTC	U0423	Invalid Data Received From Instrument Panel Cluster Control Module

Circuit description

The transmission control computer ASSY sends/receives signals to/from ECMs via CAN communication.

NOTE:

- Problems on the CAN bus (communication line) can be checked from the DLC3 connector. (Except when a DLC3 branch line is disconnected.)
- Diagnostic codes related to CAN communication can be checked using SSM4.
- Although DLC3 is connected to the CAN communication line, CAN communication cannot detect problems on the DLC3 branch lines.

AT

DTC No. SAE/TCCS	DTC detecting condition 1. Diagnosis condition 2. Abnormal status 3. Abnormal period 4. Others	Inspection parts
U0073	1. IG voltage remains at 9 V or larger for 1 second or more. 2. Data cannot be sent/received. 3. 500 ms 4. 1 trips	• CAN system
U0401	1. CAN bus is normal. 2. Abnormal signal from engine control computer is received. 3. 50 times 4. 1 trips	• CAN system
U0416	1. CAN bus is normal. 2. Abnormal signal from skid control computer (brake actuator ASSY) is received. 3. 40 times 4. 1 trips	• CAN system
U0422	1. CAN bus is normal. 2. Abnormal signal from main body ECM (multiplex network body computer) is received. 3. 40 times 4. 1 trips	• CAN system

DTC No. SAE/TCCS	DTC detecting condition 1. Diagnosis condition 2. Abnormal status 3. Abnormal period 4. Others	Inspection parts
U0423	1. CAN bus is normal. 2. Abnormal signal from combination meter ASSY is received. 3. 40 times 4. 1 trips	• CAN system

MONITOR STRATEGY

Applicable diagnostic codes	U0073: CAN failure ·A system bus off detection U0401: Data error from engine U0416: Data error from VDC
Required sensor / component	U0073: TCM U0401: TCM U0406: Skid control ECM
Operation frequency	Consecutive
Period	1 count
MIL operation	Immediate
Operation order	None

TYPICAL ENABLING CONDITIONS

U0073: CAN failure ·A system bus off detection

Battery voltage	9.0V or more
Above condition is established	1 second or more

U0401: Data error from engine

Battery voltage	9.0V or more
Above condition is established	1 second or more
CAN bus OFF (U0073)	No defect

U0416: Data error from VDC

Battery voltage	9.0V or more
Above condition is established	1 second or more
CAN bus OFF (U0073)	No defect

TYPICAL MALFUNCTION THRESHOLDS

U0073: CAN failure ·A system bus off detection

CAN controller confirms the bus every 50 milliseconds, then the bus is turned OFF.	1 count or more

U0401: Invalid Data Received From ECM/PCM "A"

The communication counter does not count up. (Check the communication counter value every 10 milliseconds.)	50 count

U0416: Data error from VDC

The communication counter does not count up. (Check the communication counter value every 10 milliseconds.)	40 count

Inspection steps

1	Read the diagnostic code

(1) Connect the SSM4 to the DLC3.
(2) Turn the ignition switch to ON.
(3) Read diagnostic codes according to SSM4 display. (Refer to AT - 17)

Next

To CAN communication system (Refer to NW - 30)

DTC	U0100	Lost Communication With ECM/PCM "A"
DTC	U0122	Lost Communication With Vehicle Dynamics Control Module
DTC	U0140	Lost Communication With Body Control Module
DTC	U0155	Lost Communication With Instrument Panel Cluster (IPC) Control Module

Circuit description

The transmission control computer ASSY sends/receives signals to/from ECMs via CAN communication.

NOTE:

- Problems on the CAN bus (communication line) can be checked from the DLC3 connector. (Except when a DLC3 branch line is disconnected.)
- Diagnostic codes related to CAN communication can be checked using SSM4.
- Although DLC3 is connected to the CAN communication line, CAN communication cannot detect problems on the DLC3 branch lines.

DTC No. SAE/TCCS	DTC detecting condition 1. Diagnosis condition 2. Abnormal status 3. Abnormal period 4. Others	Inspection parts
U0100	1. CAN bus is normal. 2. Signals from ECM No CAN are lost. 3. 500 ms, 800 ms, 2000 ms (differ depending on ID) 4. 1 trips	• CAN system
U0122	1. CAN bus is normal. 2. Signals from skid control computer (brake actuator ASSY) are lost. 3. 800 ms 4. 1 trips	• CAN system
U0140	1. CAN bus is normal. 2. Signals from main body ECM (multiplex network body computer) are lost. 3. 800 ms, 20000 ms (differ depending on ID) 4. 1 trips	• CAN system
U0155	1. CAN bus is normal. 2. Signals from combination meter ASSY are lost. 3. 2000 ms 4. 1 trips	• CAN system

AT

MONITOR STRATEGY

Applicable diagnostic codes	U0100: Engine data not received U0122: VDC data not received
Required sensor / component	U0100: TCM U0122: Skid control ECM
Operation frequency	Consecutive
Period	1 count
MIL operation	Immediate
Operation order	None

TYPICAL ENABLING CONDITIONS

Battery voltage	9.0V or more
Above condition is established	1 second or more
CAN bus OFF (U0073)	No defect

Inspection steps

1	Read the diagnostic code

(1) Connect the SSM4 to the DLC3.
(2) Turn the ignition switch to ON.
(3) Read diagnostic codes according to SSM4 display. (Refer to AT - 17)

Result

Result	Go to
P160A is not output at the same time.	A
P160A is output at the same time.	B

B → P160A (refer to AT - 124)

A

2	Read the diagnostic code

(1) Connect the SSM4 to the DLC3.
(2) Turn the ignition switch to ON.
(3) Read diagnostic codes according to SSM4 display. (Refer to AT - 17)

Next

To CAN communication system (Refer to NW - 30)

Sports sequential shift switch system

Circuit description

When the shift is in M position, it can be changed to any gear using the sequential gate of the floor select lever ASSY.

Circuit figure

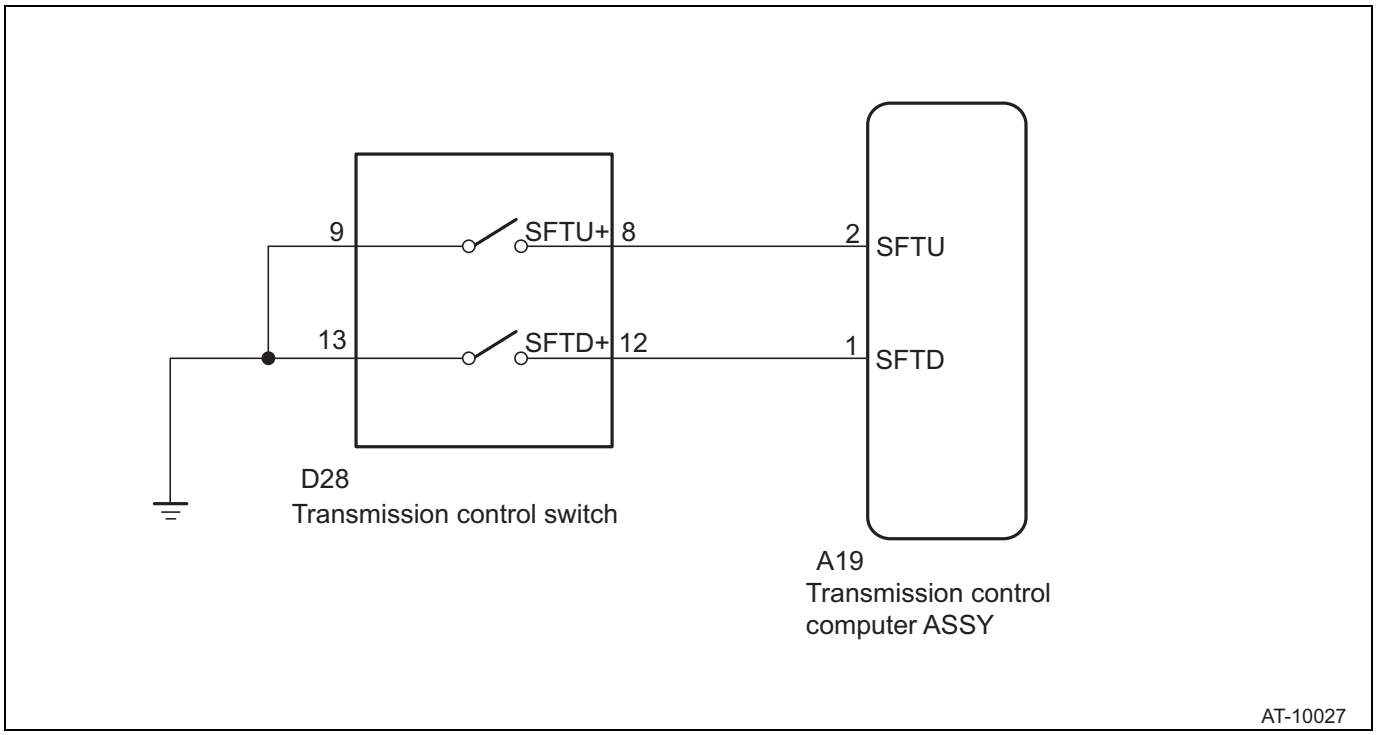

Inspection steps

AT

1	Check of transmission control switch unit

(1) Disconnect the connector D28 of the transmission control switch.
(2) Check the transmission control switch unit. (Refer to AT - 211)

NG → Replacement of transmission control switch (refer to AT - 199)

OK

2	Check wiring harness and connector (transmission control switch - transmission control computer)

(1) Disconnect the connector A19 of the transmission control computer ASSY.
(2) Measure the resistance of the vehicle side connector. (For terminal arrangement, refer to AT - 24.)

Resistance

Inspection terminals	Inspection conditions	Standard value
A19-2 (SFTU) - chassis ground	When select lever is in M position and shifted to "+"	Less than 1 Ω
A19-1 (SFTD) - chassis ground	When select lever is in M position and shifted to "-"	Less than 1 Ω
A19-2 (SFTU) - chassis ground	Neutral position (M position)	10 k Ωor more
A19-1 (SFTD) - chassis ground	Neutral position (M position)	10 k Ωor more

(3) Connect the connector A19 of the transmission control computer ASSY.

NG → Repair or replacement of wiring harness or connector

OK

3	Replacement of transmission control computer ASSY

(1) Replace the transmission control computer ASSY. (Refer to AT - 322)

Next

AT unit correction (refer to AT - 19)

Paddle shift switch system

Description of functions

When the shift is in M position, it can be changed to any gear using the transmission shift switch (paddle shifter) of the steering wheel ASSY.

Also, when operating the switch of the transmission shift of the steering wheel ASSY while driving in D position, gear selection in D position is initiated and any gear can be selected.

AT

Circuit figure

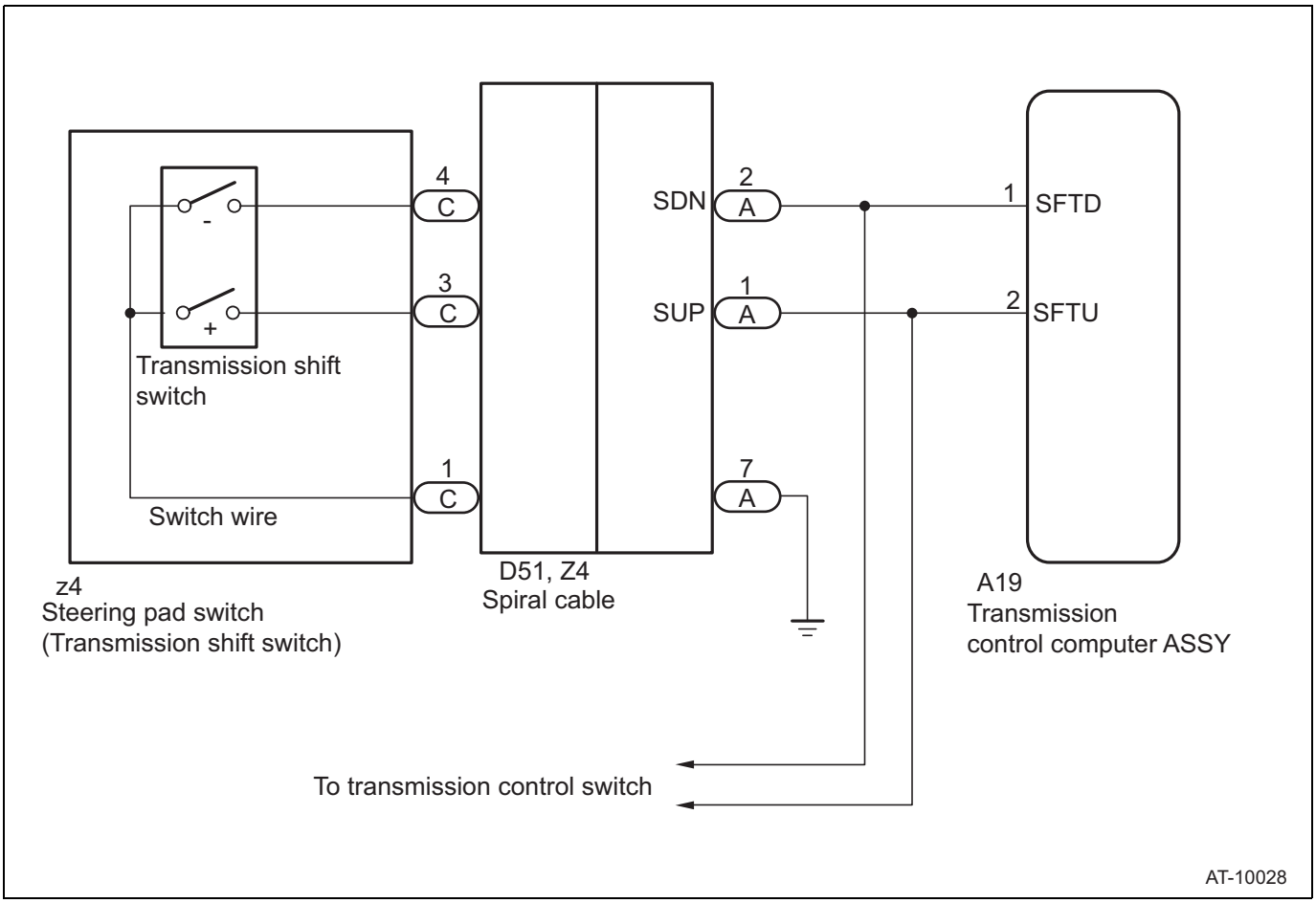

Inspection steps

1	Reading of SSM4 data (UP SW/DOWN SW)

(1) Connect the SSM4 to the DLC3.
(2) Turn the ignition switch to ON.
(3) Use SSM4 to display the [Data monitor] screen according to the screen display and check the computer data recorded when the transmission shift switch of the steering wheel ASSY is operated to +/-.

SSM4 screen: [Transmission Control System] →[Select Function] →[Data monitor]

Item name [Symbol]	Item description Display range	Normal value	Remarks
UP SW	Indicating transmission control switch (+) ON/OFF	Release →pull the shift switch "+" lever. OFF →ON	-
DOWN SW	Indicating transmission control switch (-) ON/OFF	Release →pull the shift switch "-" lever. OFF →ON	-

NG → Go to Step 2.

OK

Inspection for problems that do not normally occur (Refer to IN - 32)

AT

2	Check wiring harness and connector (transmission shift switch - transmission control computer)

(1) Disconnect the connector A19 of the transmission control computer ASSY.
(2) Check the resistance of the terminals. (Refer to AT - 24for terminal arrangement of transmission control computer ASSY)

Resistance

Inspection terminals	Inspection conditions	Standard value
A19-1 (SFTD) - chassis ground	Shift switch Pull the "+" lever.	Less than 1 Ω
A19-1 (SFTD) - chassis ground A19-2 (SFTU) - chassis ground	Neutral position	10 k Ωor more
A19-2 (SFTU) - chassis ground	Shift switch Pull the "-" lever.	Less than 1 Ω

(3) Connect the connector A19 of the transmission control computer ASSY.

NG → Go to Step 4.

OK

3	Replacement of transmission control computer

(1) Replace the transmission control computer ASSY. (Refer to AT - 322)

Next

AT unit correction

4	Check wiring harness and connector (spiral cable - chassis ground)

(1) Disconnect the spiral cable connector A from the spiral cable.
(2) Measure the resistance of the spiral cable vehicle side terminal.
Resistance

Terminal No. (terminal symbol)	Inspection conditions	Standard value
A-7 - chassis ground	Always	Less than 1 Ω

(3) Connect the spiral cable connector A to the spiral cable.

NG → Check and replacement of wiring harness and connector

OK

5	Check wiring harness and connector (spiral cable - transmission control computer)

(1) Disconnect the connector A19 of the transmission control computer ASSY.
(2) Disconnect the spiral cable connector A from the spiral cable.
(3) Measure the resistance between the terminals.
Resistance

Inspection terminals	Inspection conditions	Standard value
A19-1 (SFTD) - A-2	Always	Less than 1 Ω
A19-2 (SFTU) - A-1	Always	Less than 1 Ω

Resistance

Inspection terminals	Inspection conditions	Standard value
A19-1 (SFTD) and A-2 - chassis ground	Always	10 k Ωor more
A19-2 (SFTU) and A-1 - chassis ground	Always	10 k Ωor more

(4) Connect the connector A19 of the transmission control computer ASSY.
(5) Connect the spiral cable connector A to the spiral cable.

NG → Check and replacement of wiring harness and connector

OK

6	Transmission shift switch check (transmission shift switch - spiral cable)

CAUTION:
Refer to RS - 5for airbag handling and working precautions.
(1) Remove the driver's airbag module.

NOTE:
Refer to RS - 246for driver's airbag module installation/removal.

(2) Disconnect the connector C of the spiral cable.
(3) Measure the resistance between the terminals.

Resistance

Inspection terminals	Inspection conditions	Standard value
C-4 - C-1	Shift switch Pull the "+" lever.	Less than 1 Ω
C-4 - C-1 C-3 - C-1	Shift switch Neutral position	10 k Ωor more
C-3 - C-1	Shift switch Pull the "-" lever.	Less than 1 Ω

(4) Connect the connector C of the spiral cable.

NG → Go to Step 7.

OK

Spiral cable SUB-ASSY check (refer to RS - 250)

7	Check of transmission shift switch unit

(1) Remove the transmission shift switch. (Refer to AT - 212)
(2) Check the transmission shift switch unit. (Refer to AT - 213)

NG → Replacement of transmission shift switch (refer to AT - 212)

OK

Check and replacement of switch wire (refer to AT - 212)

Pattern select switch system

Circuit description

Drive mode can be switched by inputting signal of the pattern select switch ASSY to the transmission control computer.

Circuit figure

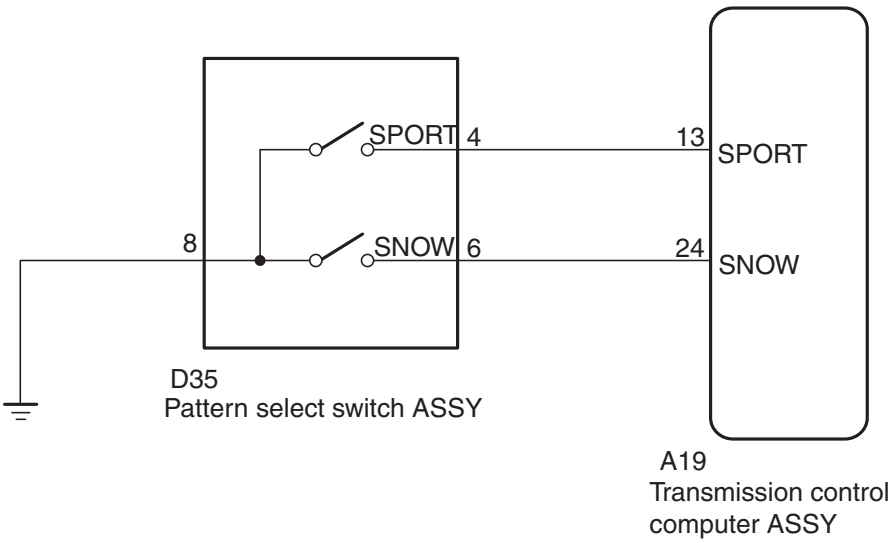

Inspection steps

AT

1	Reading of SSM4 data

(1) Connect the SSM4 to the DLC3.
(2) Turn the ignition switch to ON.
(3) Use SSM4 to display the [Data monitor] screen according to the screen display and check the computer data recorded when the SPORT mode switch is operated.

SSM4 screen: [Transmission Control System] →[Select Function] →[Data monitor]

Item name [Symbol]	Item description Display range	Normal value	Remarks
SPORT SW	Indicating pattern select (SPORT) switch ON←→OFF	Pattern select (SPORT) switch OFF→ON OFF→ON	-

NG → Go to Step 3.

OK

2	Reading of SSM4 data

(1) Connect the SSM4 to the DLC3.
(2) Turn the ignition switch to ON.
(3) Use SSM4 to display the [Data monitor] screen according to the screen display and check the computer data recorded when the SNOW mode switch is operated.

SSM4 screen: [Transmission Control System] →[Select Function] →[Data monitor]

Item name [Symbol]	Item description Display range	Normal value	Remarks
SNOW SW	Indicating pattern select (SNOW) switch ON←→OFF	Pattern select (SNOW) switch OFF→ON OFF→ON	-

NG → Go to Step 6.

OK

Go to the symptom table (Refer to AT - 13)

3	Check of pattern select switch ASSY unit

(1) Disconnect the connector D35 of pattern select switch ASSY.
(2) Check the pattern select switch ASSY (SPORT switch) unit. (Refer to AT - 215)

NG → Replacement of pattern select switch ASSY (refer to AT - 214)

OK

4	Check wiring harness and connector (pattern select switch - transmission control computer - chassis ground)

(1) Disconnect the connector A19 of the transmission control computer.
(2) Disconnect the connector D35 of pattern select switch ASSY.
(3) Measure the resistance between the terminals.

Resistance

Inspection terminals	Inspection conditions	Standard value
A19-13 (SPORT) - D35-4 (SPORT)	Always	Less than 1 Ω
D35-8 - chassis ground	Always	Less than 1 Ω
A19-13 (SPORT) - chassis ground	Always	10 k Ωor more

(4) Connect the connector A19 of the transmission control computer.
(5) Connect the connector D35 of the pattern select switch ASSY.

NG → Repair or replacement of wiring harness or connector

OK

5	Replacement of transmission control computer ASSY

(1) Replace the transmission control computer. (Refer to AT - 322)

Next

AT unit correction (refer to AT - 19)

AT

6	Check of pattern select switch ASSY unit

(1) Disconnect the connector D35 of pattern select switch ASSY.
(2) Check the pattern select switch ASSY (SNOW switch) unit. (Refer to AT - 215)

NG → Replacement of pattern select switch ASSY (refer to AT - 214)

OK

7	Wiring harness or connector check (pattern select switch - transmission control computer - chassis ground)

(1) Disconnect the connector A19 of the transmission control computer.
(2) Disconnect the connector D35 of pattern select switch ASSY.
(3) Measure the resistance between the terminals.

Resistance

Inspection terminals	Inspection conditions	Standard value
A19-24 (SNOW) - D35-6 (SNOW)	Always	Less than 1 Ω
D35-8 - chassis ground	Always	Less than 1 Ω
A19-24 (SNOW) - chassis ground	Always	10 k Ωor more

(4) Connect the connector A19 of the transmission control computer.
(5) Connect the connector D35 of the pattern select switch ASSY.

NG → Repair or replacement of wiring harness or connector

OK

8	Replacement of transmission control computer ASSY

(1) Replace the transmission control computer. (Refer to AT - 322)

Next

AT unit correction (refer to AT - 19)

AT

Automatic transmission fluid

Replacement

1. Replacement of automatic transmission fluid
   (1) Lift up the vehicle and maintain in a horizontal position. [*1]
   (2) Remove the under cover front AL. (Refer to IE - 39)
   (3) Remove the under cover COMPL T/M. (Refer to IE - 40)
   (4) Remove the drain plug and gasket to drain fluid. [*2]
   (5) Temporarily tighten the drain plug via the gasket. [*3]
   NOTE:
   Perform the replacement of the gasket and final tightening by following procedure [*16].
   (6) Remove the refill plug and the O-ring. [*4]

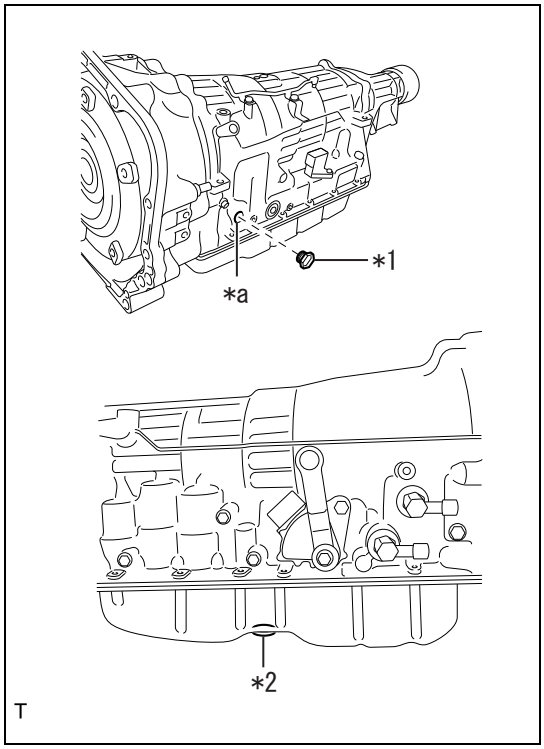

(7) Use a socket hexagon wrench to remove the overflow plug. [*5]

Captions in illustration

*1	Refill plug
*2	Overflow plug
*a	Refill hole

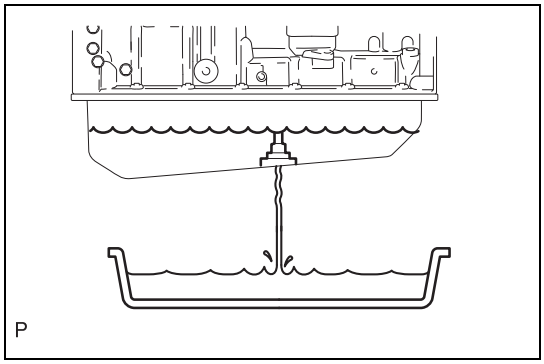

(8) Add fluid through the refill hole until the fluid flows out of the overflow tube. [*6]
CAUTION:
- Fill in auto fluid WS.
- Slowly add the fluid. Adding the fluid rapidly can cause the fluid to hit internal parts and splash around resulting in fluid flowing out of the refill hole.

(9) Wait until the fluid stops flowing and is only dripping. [*7]
(10) Use a socket hexagon to temporarily tighten the overflow plug via the gasket. [*8]
NOTE:
Perform the replacement of the gasket and final tightening after adjusting the fluid amount.
(11) Add fluid through the refill hole until reaching the specified amount when removing/installing the oil pan. [*9]
Specified amount: 2.0 L {2.1 US qt, 1.8 Imp qt}

AT

NOTE:
If fluid flows out from the refill hole and you cannot fill the specified amount when adding fluid through the refill hole, perform procedures [*10] to [*15] below in order to circulate fluid until it reaches the oil passages in the transmission and inside the torque converter, then add the specified amount of fluid through the refill hole.

(12) Temporarily tighten the refill plug via the O-ring. [*10]
NOTE:
Perform the replacement of the O-ring and final tightening after adjusting the fluid amount.
(13) Lower the vehicle. [*11]
(14) Start the engine. [*12]
NOTE:
Start the engine with the A/C turned OFF.
(15) Move the select lever from P position to M position slowly, and shift it to P position again. [*13]
(16) Idle the engine for 30 seconds to warm up the engine. [*14]
(17) Turn the ignition switch to OFF. [*15]
(18) Repeat operations [*1] to [*15].
(19) Perform operations [*1] to [*2].
(20) Install the drain plug via a new gasket. [*16]
Standard value: T=20N·m {204kgf·cm} {14.8ft·lbf}
(21) Perform operations [*4] to [*11].
(22) Adjust the fluid amount. (Refer to AT - 163)
(23) Install the under cover COMPL T/M. (Refer to IE - 46)
(24) Install the under cover front AL. (Refer to IE - 46)
(25) Lower the vehicle.
(26) Operation finished.

Adjustment

Fluid refill and adjustment image:

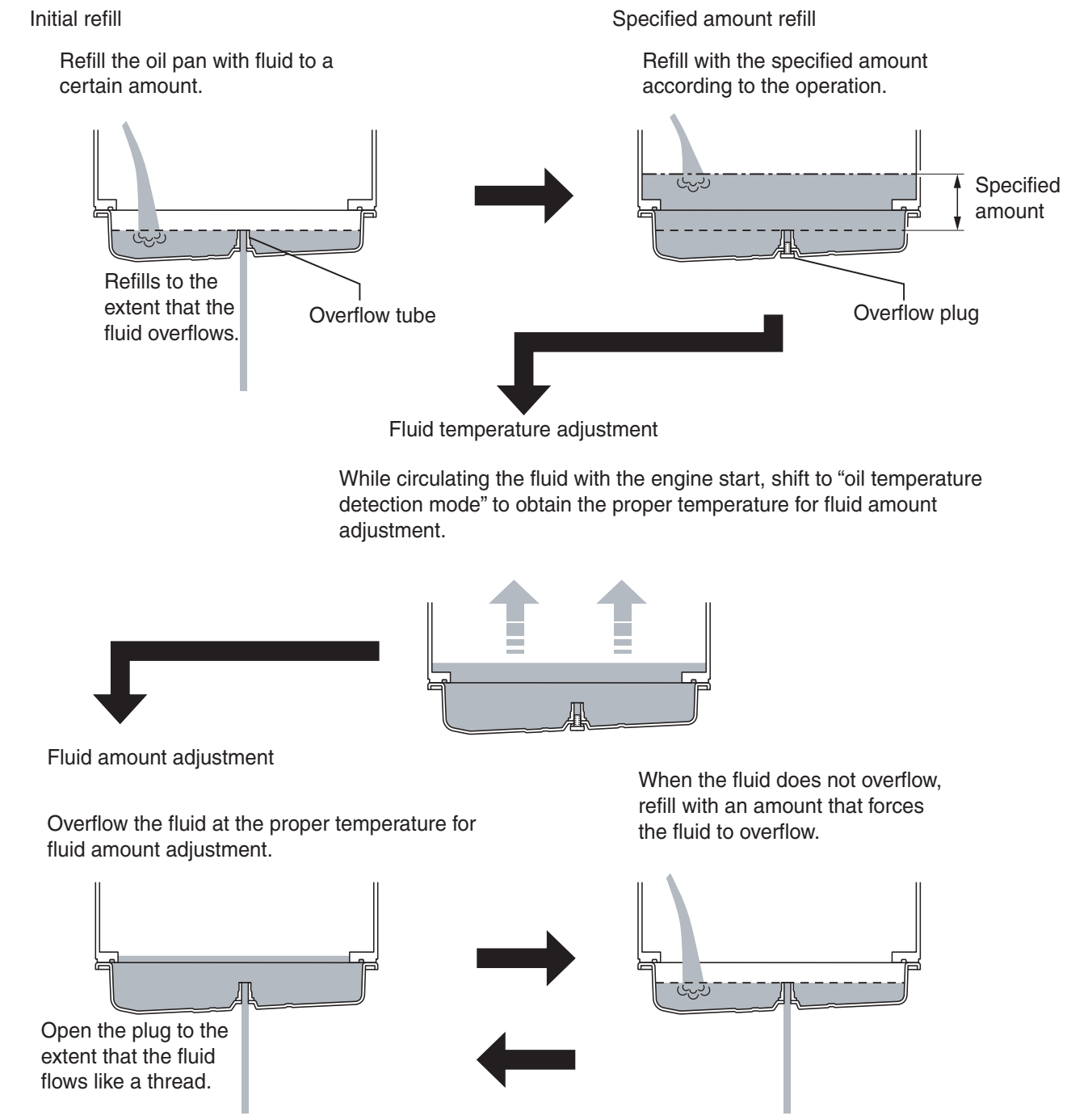

NOTE:

- Fill in auto fluid WS.
- Be sure to always park the vehicle on a level surface when adjusting the fluid amount.
- When a large amount of fluid filling is required for operations including replacement of automatic transmission ASSY, removal/installation and replacement of oil pan and drain plug, and replacement of torque converter ASSY, perform operations of [Filling of automatic transmission fluid] to [Adjustment of automatic transmission fluid amount].
- When a small amount of fluid filling is required for operations including replacement of extension housing rear oil seal and repair of oil bleeds, perform only [Adjustment of automatic transmission fluid amount].

1. Filling of automatic transmission fluid

CAUTION:

- Perform procedures when the automatic transmission fluid is sufficiently cool.
- Be sure to fill the automatic transmission fluid after switching to oil amount adjustment mode.
- Slowly add the fluid. Adding the fluid rapidly can cause the fluid to hit internal parts and splash around resulting in fluid flowing out of the refill hole.

(1) Lift up the vehicle and maintain in a horizontal position.

(2) Remove the under cover front AL. (Refer to IE - 39)

(3) Remove the under cover COMPL T/M. (Refer to IE - 40)

(4) Remove the refill plug and the O-ring.

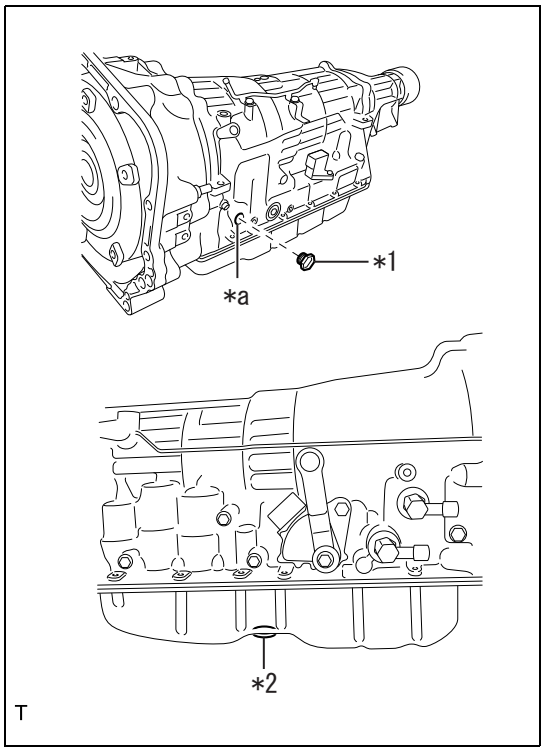

(5) Use a socket hexagon wrench to remove the overflow plug.

Captions in illustration

*1	Refill plug
*2	Overflow plug
*a	Refill hole

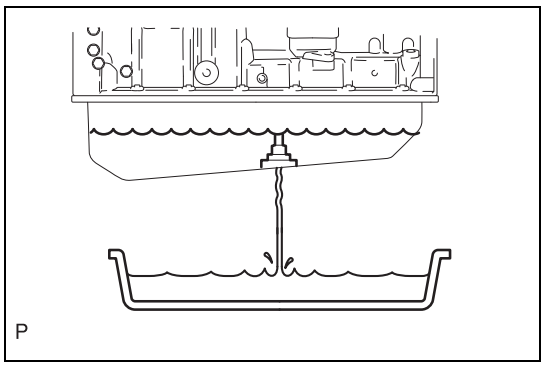

(6) Add fluid through the refill hole until the fluid flows out of the overflow tube.

CAUTION:

Slowly add the fluid. Adding the fluid rapidly can cause the fluid to hit internal parts and splash around resulting in fluid flowing out of the refill hole.

(7) Wait until the fluid stops flowing and drops.

(8) Use a socket hexagon wrench to temporarily tighten the overflow plug.

NOTE:

Perform the replacement of the gasket and final tightening after adjusting the fluid amount.

(9) Fill the specified amount of fluid from the refill hole.

Specified amount

Related operation	Filling amount (reference)
Removal/installation of oil pan and drain plug	2.0 L {2.1 US qt, 1.8 Imp qt}
Installation/removal of transmission valve body ASSY	3.0 L {3.2 US qt, 2.6 Imp qt}

Related operation	Filling amount (reference)
Replacement of torque converter	4.5 L {4.8 US qt, 4.0 Imp qt}

NOTE:

If fluid flows out from the refill hole and you cannot fill with the specified amount when adding fluid through the refill hole, perform the following procedures to circulate fluid until it reaches the oil passages in the transmission and inside the torque converter.

(a) Temporarily tighten the refill plug.

NOTE:

Perform the replacement of the O-ring and final tightening after adjusting the fluid amount.

(b) Start the engine.

(c) Move the select lever from P position to M position slowly, and shift it to P position again.

(d) Idle the engine for approx. 30 seconds.

(e) Turn the ignition switch to OFF.

2. Automatic transmission fluid amount adjustment

CAUTION:

- Be sure to adjust the amount of automatic transmission fluid when the fluid temperature is appropriate for the oil amount adjustment.
- Perform procedures when the automatic transmission fluid is sufficiently cool.

(1) When using SSM4

(a) Connect the SSM4 to data link connector.

(b) Turn the ignition to ON. (Engine OFF)

(c) Turn off all parts effecting an electrical load such as air conditioner, audio and lights.

(d) Select [Work Support] on the [Select Function] screen of SSM4. Select [ATF level adjustment mode] on the [Work Support] screen of SSM4.

NOTE:

If the ATF temperature is 42°C (107.6°F) or more, perform the procedure again after lowering the ATF temperature by leaving the vehicle in a cool place.

(e) While checking the ATF temperature on the screen of SSM4, raise the oil temperature by idling.

(f) Adjust the oil amount as soon as the oil reaches the appropriate temperature for the oil amount adjustment of 42°C (107.6°F).

CAUTION:

Be sure to adjust ATF (tightening the overflow plug) when the oil temperature is proper.

Lower than proper oil temperature	Proper oil temperature	Higher than proper oil temperature
43°C Less than (109.4°F)	43°C to 47°C (109.4°F to 116.6°F)	48°C (118.4°F) or higher

(2) When TC terminal is shorted

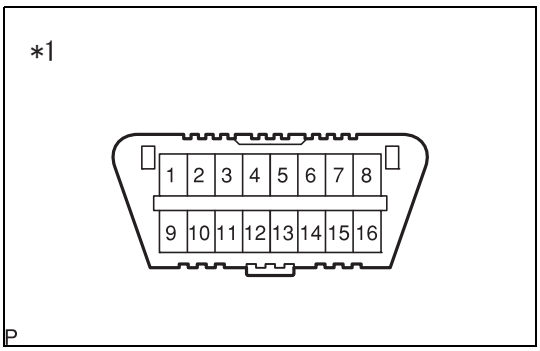

(a) Short No.13 and No.4 of the data link connector.

Captions in illustration

*1	Data link connector

(b) Start the engine.

(c) Turn off all parts effecting an electrical load such as air conditioner, audio and lights.

(d) Operate the select lever in P→R→N→D→M→D→N→R→P to circulate ATF in the transmission.

(e) Perform N←→D operation within 1.5 seconds for 6 seconds or more consecutively to switch to the oil temperature adjustment mode. When the oil temperature adjustment mode is activated, the up-shift permission indicator light [▲]/

down-shift permission indicator light [▼] in the combination meter illuminate for 2 seconds and go off simultaneously regardless of the range position.

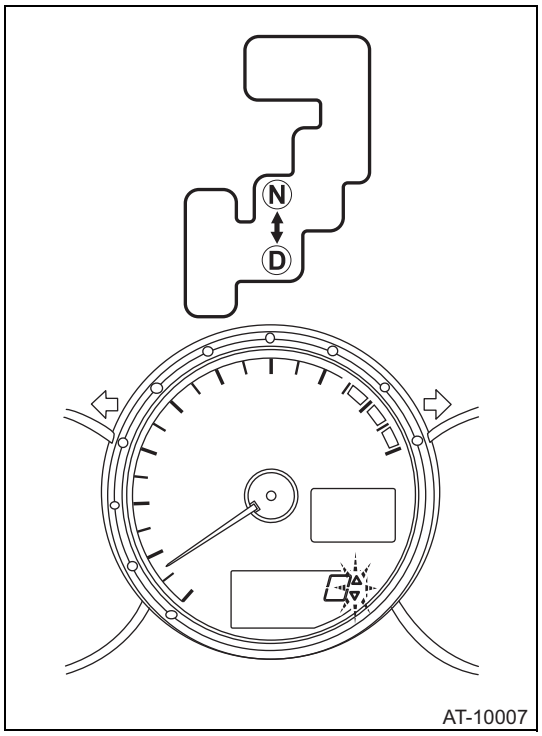

AT-10007

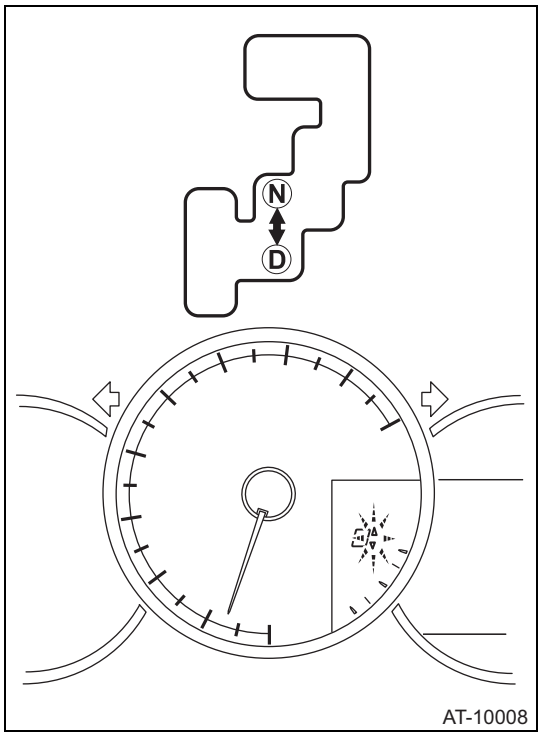

AT-10008

(f) After switching to oil temperature adjustment mode, shift the select lever to "P" position.

(g) Release short in No.13 and No.4 of the data link connector.

(h) Check the up-shift permission indicator light [▲]/down-shift permission indicator light [▼] status.

CAUTION:

When only the indicator light [▲] turns on or both [▲] and [▼] simultaneously turn on, stop the operation and leave the vehicle in a cool place to lower the ATF temperature. Wait until only the down-shift permission indicator light [▼] turns on when oil amount adjustment mode is activated, and then repeat the procedure from step (a).

(i) Adjust the oil amount as soon as the oil reaches the appropriate temperature for the oil amount adjustment.

CAUTION:
Be sure to adjust ATF when the oil temperature is proper.

Lower than proper oil temperature	Proper oil temperature	Higher than proper oil temperature
Only indicator light [▼] turns on.	Indicator lights [▲] and [▼] turn on simultaneously.	Only indicator light [▲] turns on.

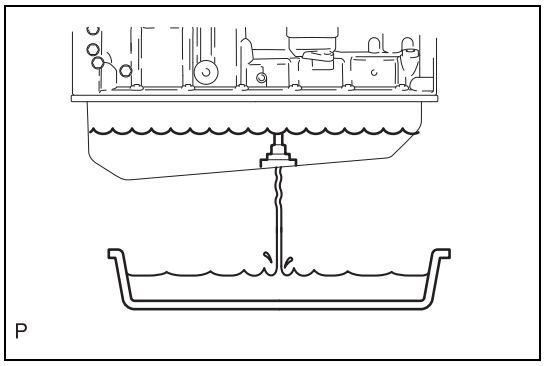

(3) Use a socket hexagon to remove the overflow plug, and check the oil amount when the temperature is appropriate for oil amount check.
- The oil amount is proper when fluid flows out of the overflow tube and then the flow of the fluid is thin.
- If fluid does not flow out of the overflow tube, fill through the refill hole until fluid flows out of the overflow tube. The oil amount is proper when the flow of the fluid is thin.

(4) Use a socket hexagon to install the overflow plug via a new gasket.
Standard value:T=20N·m {204kgf·cm} {14.8ft·lbf}
CAUTION:
Be sure to tighten the overflow plug when ATF temperature is 43°C to 47°C (109.4°F to 116.6°F) (when the indicator lights [▲] and [▼] turn on simultaneously).

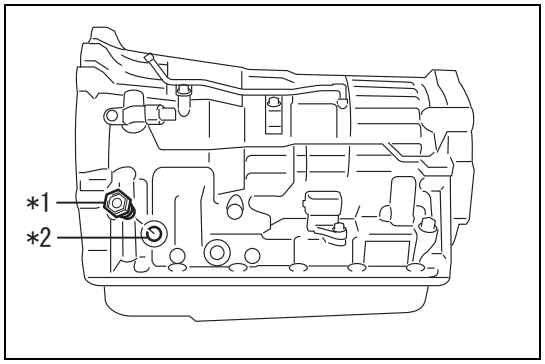

(a)Tighten the refill plug via a new O-ring.

Captions in illustration

*1	Refill plug
*2	Refill hole

Standard value:T=39N·m {400kgf·cm} {28.8ft·lbf}

(b)Install the under cover COMPL T/M. (Refer to IE - 46)
(c)Install the under cover front AL. (Refer to IE - 46)
(d)Lower the vehicle.
(e)Turn the ignition switch to OFF.

AT

Speed sensor

Exploded view

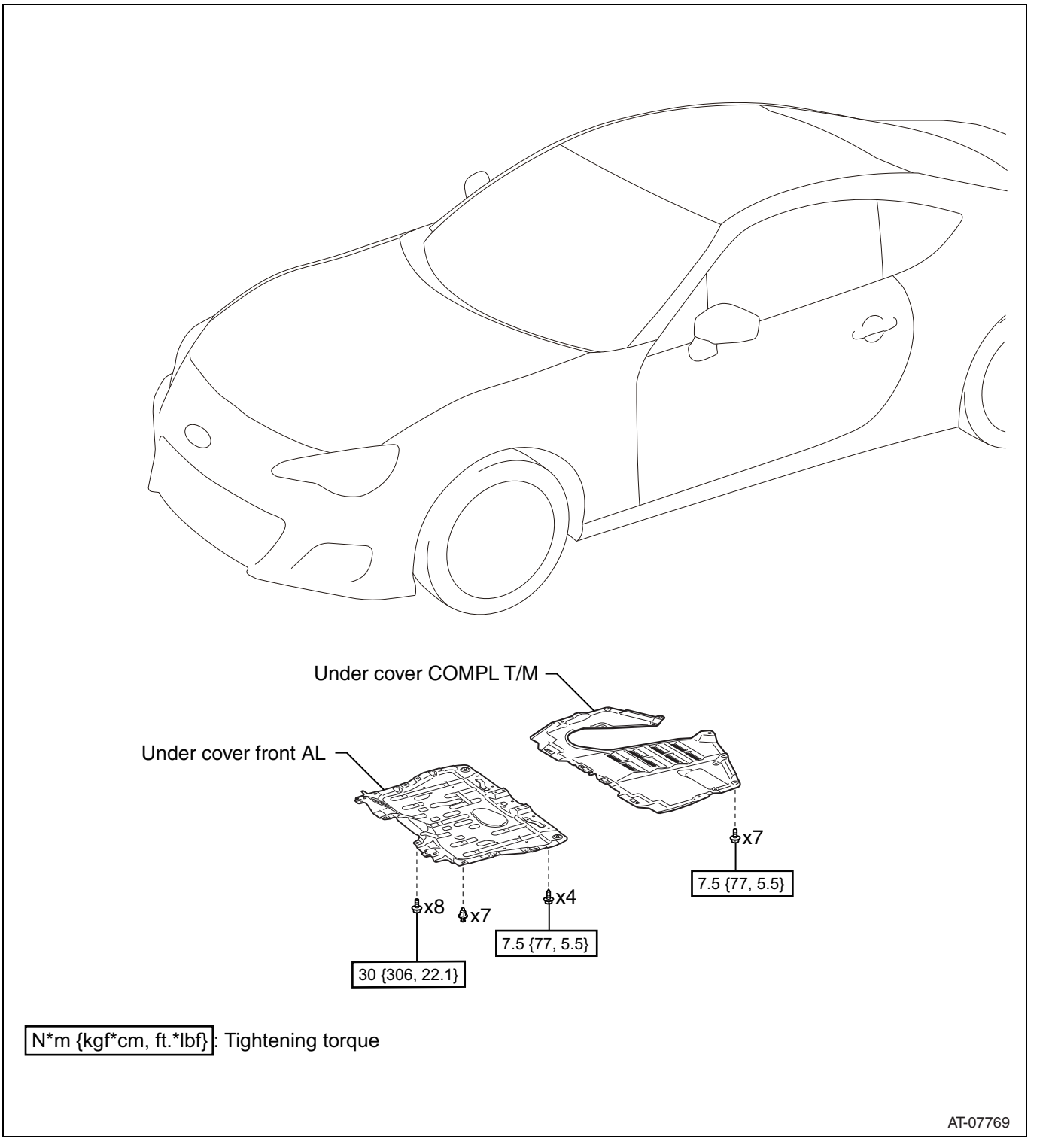

N*m {kgf*cm, ft.*lbf}: Tightening torque

AT-07769

AT

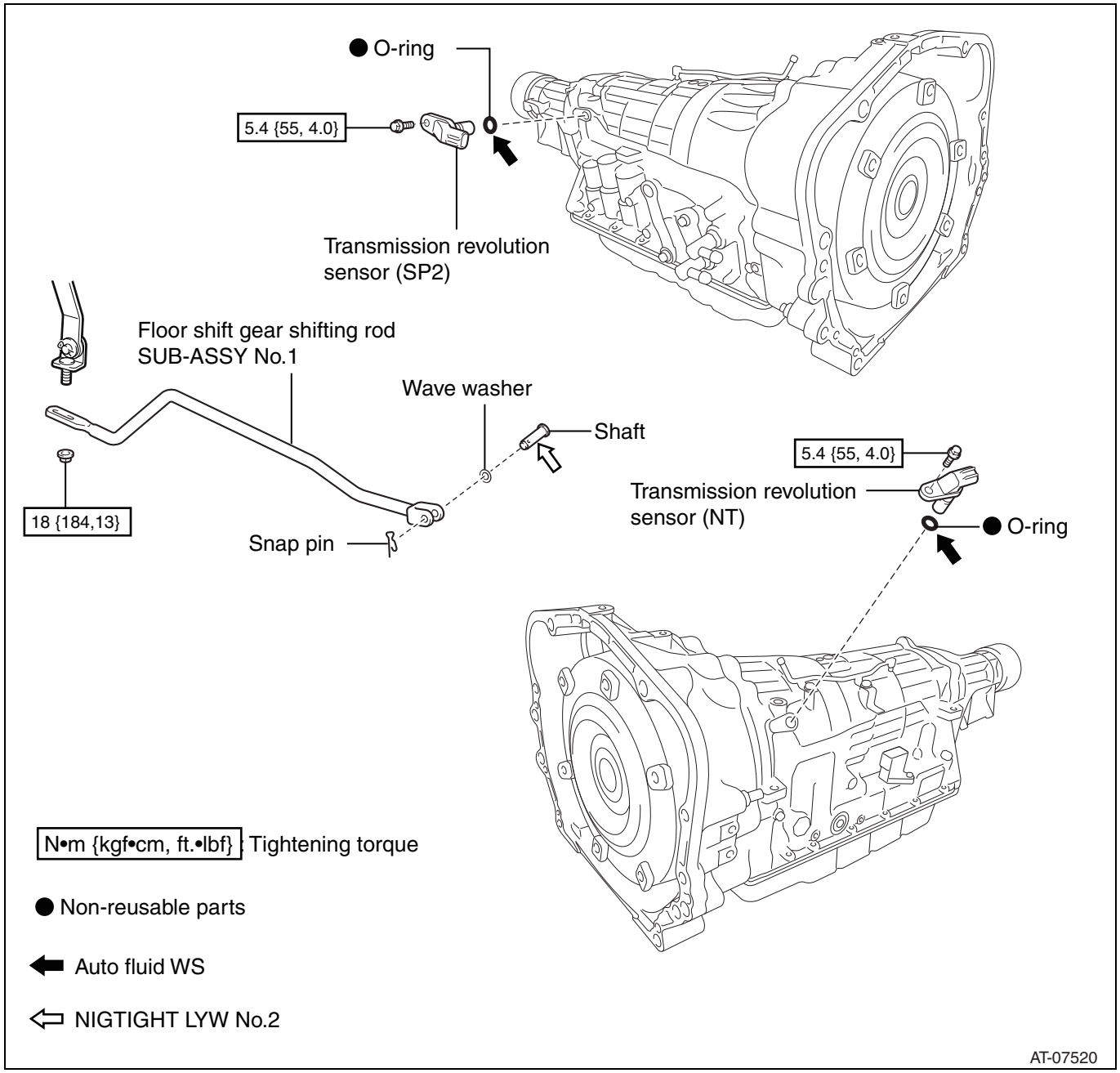

AT

Removal

1. Removal of under cover front AL (refer to IE - 39)
2. Removal of under cover COMPL T/M (refer to IE - 40)

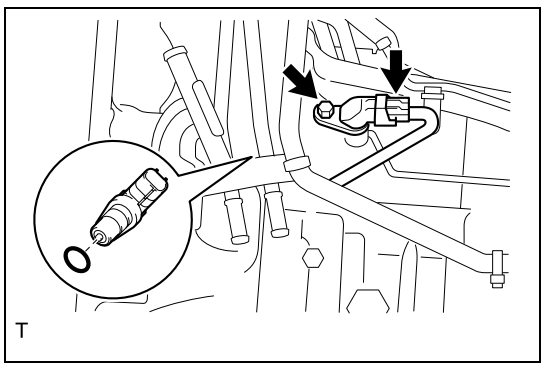

3. Removal of transmission revolution sensor (NT)
   (1) Disconnect the connector.
   (2) Remove the bolt, and then remove the transmission revolution sensor (NT) and the O-ring.

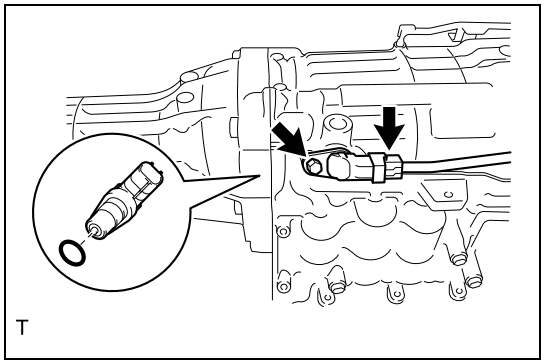

4. Removal of transmission revolution sensor (SP2)
   (1) Remove the automatic transmission ASSY. (Refer to AT - 220)
   (2) Disconnect the connector.
   (3) Remove the bolt, and then remove the transmission revolution sensor (SP2) and the O-ring.

Installation

1. Installation of transmission revolution sensor (SP2)
   (1) Apply auto fluid WS to a new O-ring and install it to the transmission revolution sensor (SP2).
   (2) Install the transmission revolution sensor (SP2) with the bolt.
   Standard value:T=5.4 N·m {55 kgf·cm} {4.0 ft-lbf}
   (3) Connect the connector.
   (4) Install the automatic transmission ASSY. (Refer to AT - 227)
2. Installation of transmission revolution sensor (NT)
   (1) Apply auto fluid WS to a new O-ring and install it to the transmission revolution sensor (NT).
   (2) Install the transmission revolution sensor (NT) with the bolt.
   Standard value:T=5.4 N·m {55 kgf·cm} {4.0 ft-lbf}
   (3) Connect the connector.
3. Installation of under cover COMPL T/M (refer to IE - 46)
4. Installation of under cover front AL (refer to IE - 46)
5. Data monitor check
   (Refer to AT - 29)

AT

Unit inspection

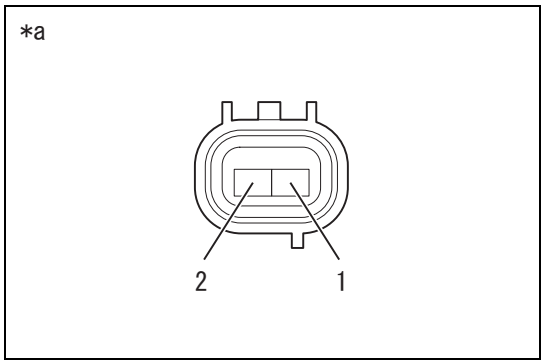

1. Transmission revolution sensor (SP2) check
   (1) Measure the resistance between the terminals.

Resistance

Inspection terminals	Inspection conditions	Standard value
Terminal 1 - terminal 2	20°C (68°F)	560 to 680Ω

Captions in illustration

*a	Connector not connected (Transmission revolution sensor (SP2))

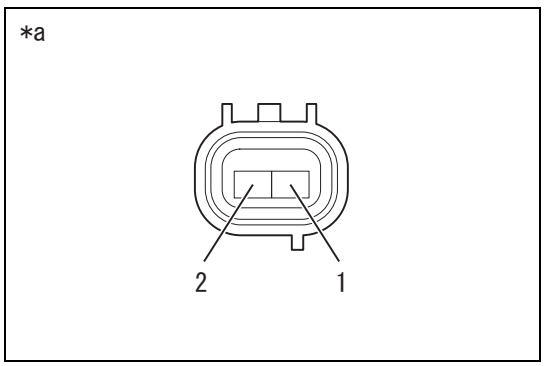

2. Check of transmission revolution sensor (NT)
   (1) Measure the resistance between the terminals.

Resistance

Inspection terminals	Inspection conditions	Standard value
Terminal 1 - terminal 2	20°C (68°F)	560 to 680Ω

Captions in illustration

*a	Connector not connected (Transmission revolution sensor (NT))

Transmission wire

Exploded view

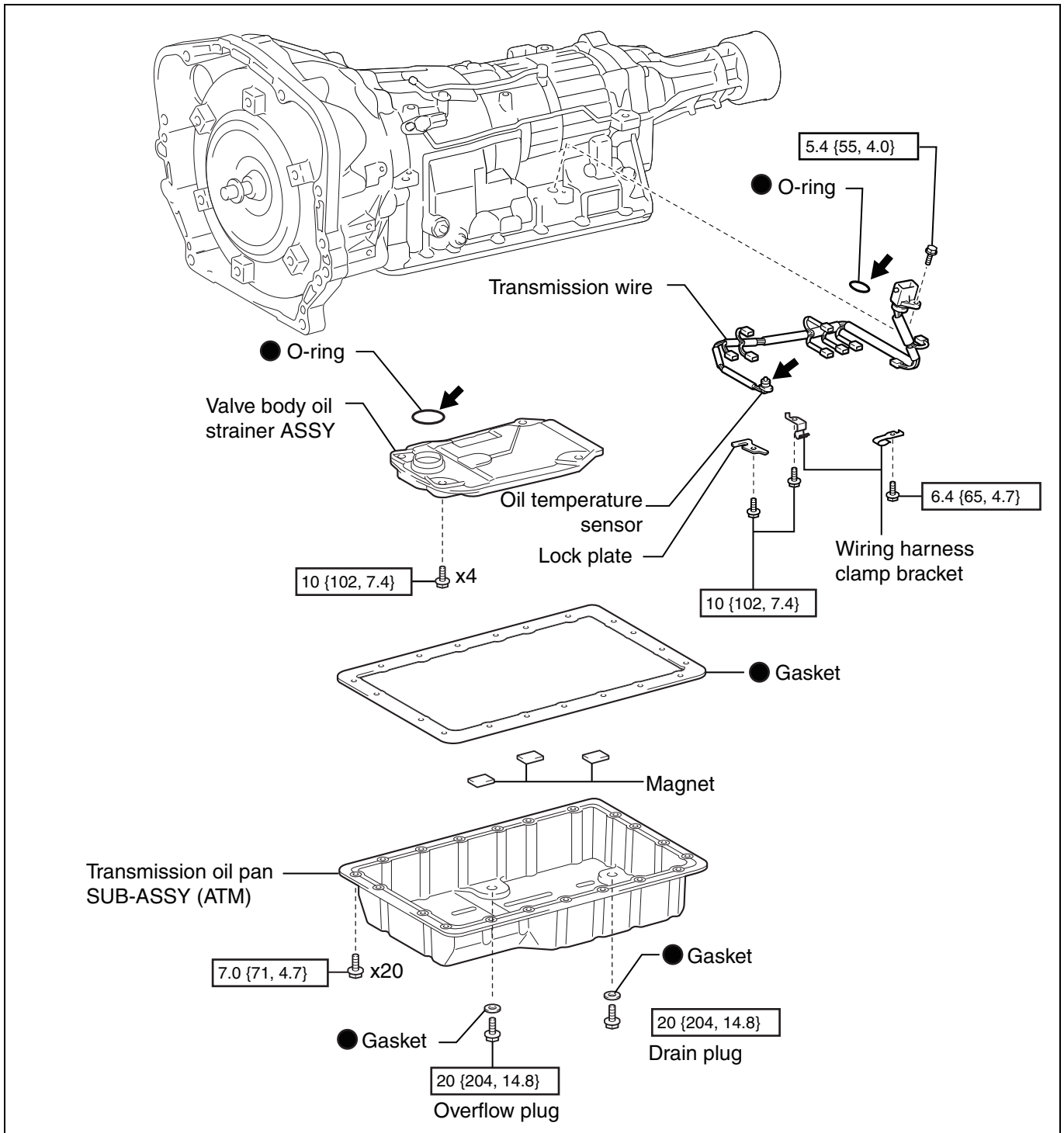

N•m {kgf•cm, ft.•lbf}: Tightening torque

● Non-reusable parts ⬅ Auto fluid WS

AT-07521

AT

Removal

1. Removal of automatic transmission ASSY
   (Refer to AT - 220)

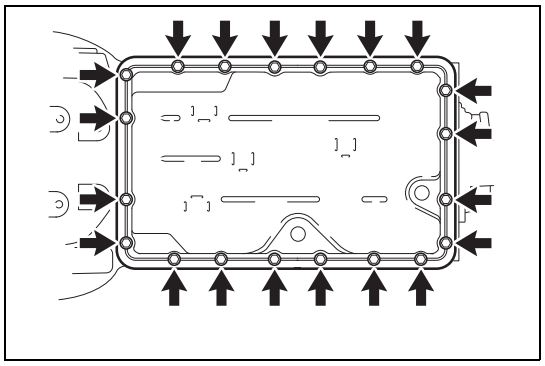

2. Removal of transmission oil pan SUB-ASSY (ATM)
   (1) Remove 20 bolts to remove the transmission oil pan SUB-ASSY (ATM).
   (2) Remove the gasket.

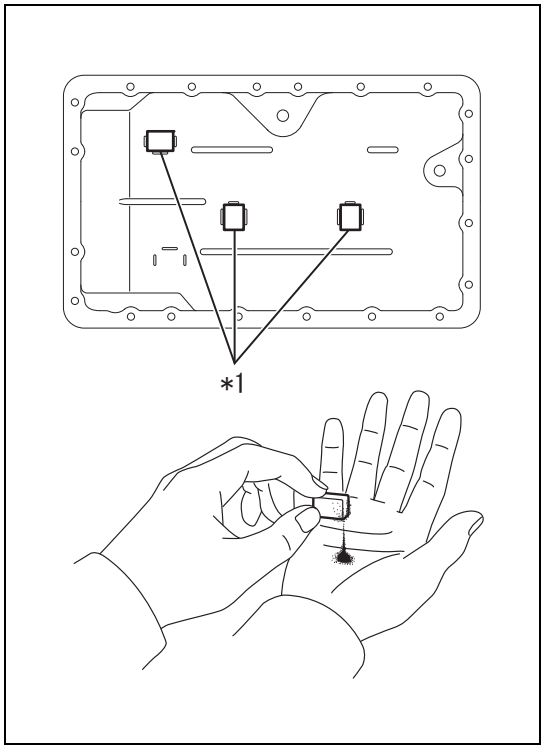

   (3) Remove 3 magnets from the transmission oil pan SUB-ASSY (ATM).

Captions in illustration

*1	Magnet

CAUTION:
- Wash metal particles, sludge, etc. off the inner surface of the transmission oil pan SUB-ASSY (ATM).
- Clean metal particles off the magnets.

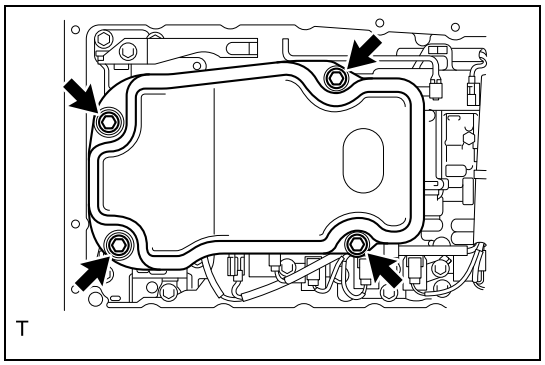

3. Removal of valve body oil strainer ASSY
   (1) Remove 4 bolts to remove the valve body oil strainer ASSY.
   CAUTION:
   Set a tray under it to receive discharged transmission fluid.

T

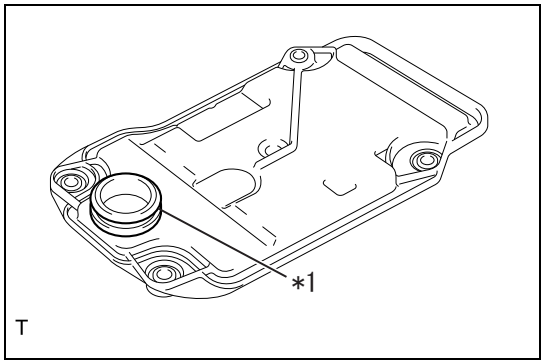

(2) Remove the O-ring from the valve body oil strainer ASSY.

Captions in illustration

*1	O-ring

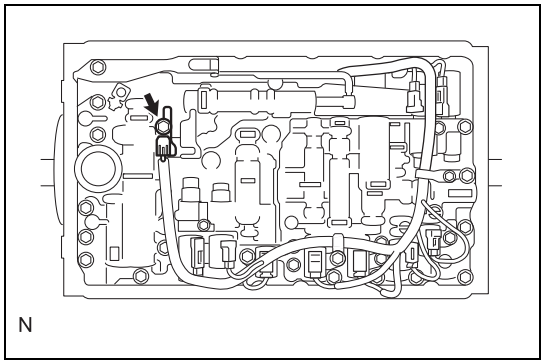

4. Disconnection of transmission wire
   (1) Remove the bolt and lock plate, and then disconnect the oil temperature sensor from the transmission valve body ASSY.

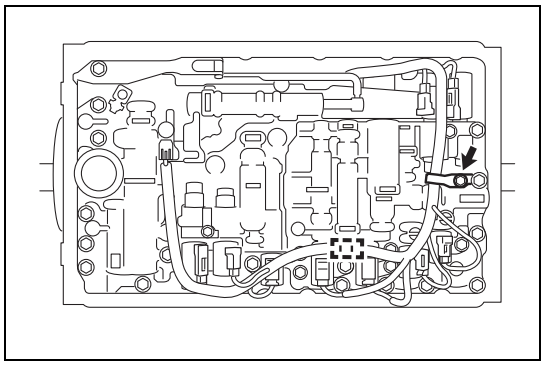

(2) Remove the bolt to remove the clamp from the valve body ASSY.
(3) Disconnect the wiring harness from the clamp.

AT

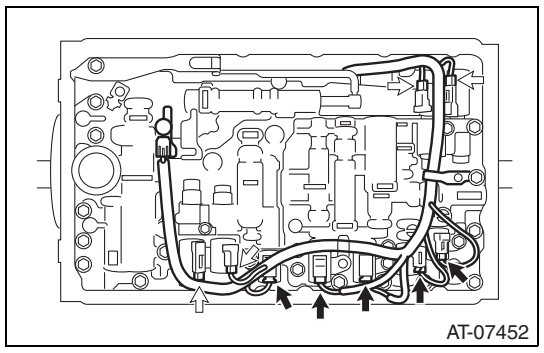

(4) Disconnect 9 connectors from each solenoid valve and disconnect the transmission wire from the transmission valve body ASSY.
NOTE:
Use a thin-tipped flat tip screwdriver for the connector indicated by the white arrow to disconnect the control solenoid connector.

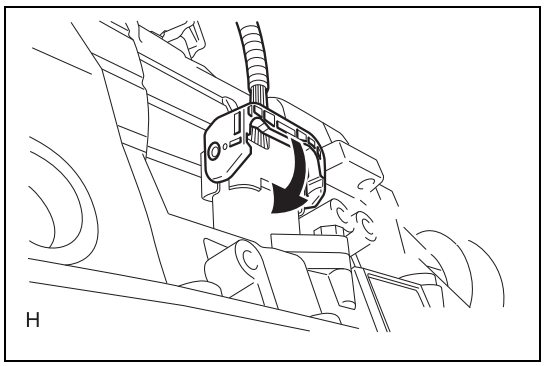

5. Removal of transmission wire
   (1) Disconnect the transmission wire connector.
   NOTE:
   Release the claw and tilt the lever downward to disconnect the connector of the transmission wire.

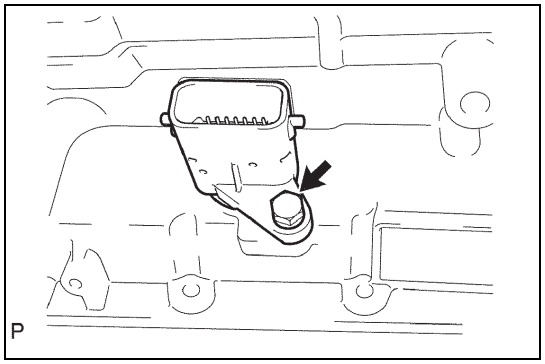

(2) Remove the bolt and pull out the transmission wire from the transmission valve body ASSY.

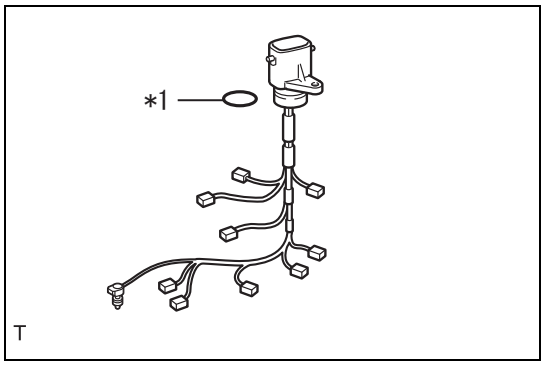

(3) Remove the O-ring from the transmission wire connector.

Captions in illustration

*1	O-ring

Installation

1. Installation of transmission wire
   (1) Apply auto fluid WS to a new O-ring and install it to the oil temperature sensor.
   (2) Apply auto fluid WS to a new O-ring and install it to the transmission wire connector.
   (3) Draw the transmission wire through the transmission wire connector mounting slot of the transmission valve body ASSY.
   (4) Install the transmission wire connector with the bolt.
   Standard value:T=5.4N·m {55kgf·cm} {4.0ft·lbf}

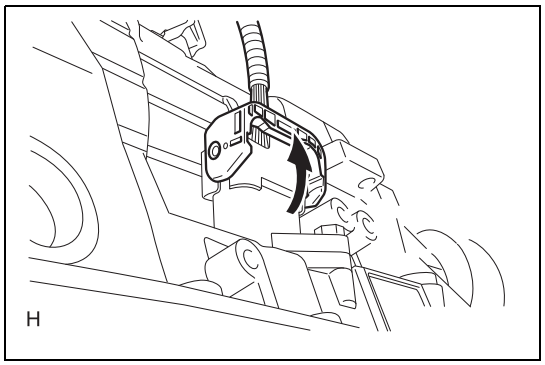

(5) Connect the connector of the transmission wire.
NOTE:
For the transmission wire connector, push up the lever until a sound indicating the claw is hooked is heard.

2. Connection of transmission wire
   (1) Connect the 9 connectors to each solenoid valve.

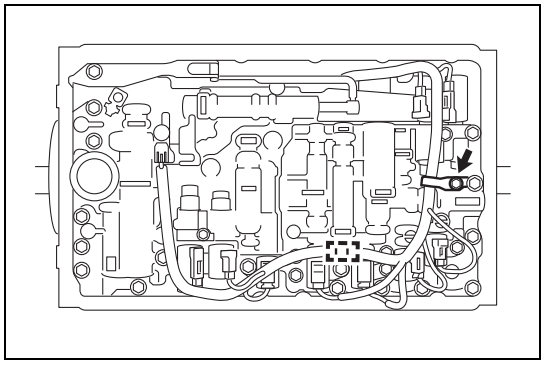

(2) Install the wiring harness clamp bracket with the bolt.
Standard value:T=6.4N·m {65kgf·cm} {4.7ft·lbf}

(3) Install the wiring harness to the clamp.

(4) Connect the oil temperature sensor to the transmission valve body ASSY with the lock plate and bolt.
Standard value:T=10N·m {102kgf·cm} {7.4ft·lbf}

3. Installation of valve body oil strainer ASSY

(1) Apply auto fluid WS to the entire circumference of a new O-ring and install it to the valve body oil strainer ASSY.

(2) Install the valve body oil strainer ASSY to the transmission valve body ASSY with 4 bolts.
Standard value:T=10N·m {102kgf·cm} {7.4ft·lbf}

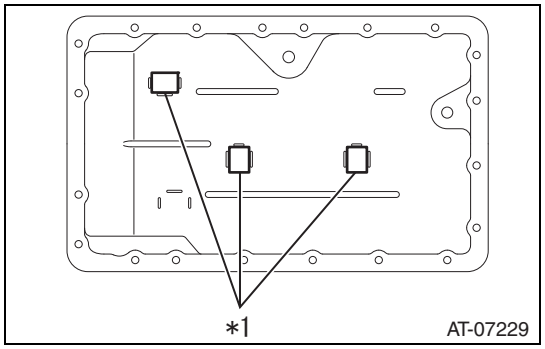

4. Installation of transmission oil pan SUB-ASSY (ATM)

(1) Install 3 magnets on the transmission oil pan SUB-ASSY (ATM).

Captions in illustration

*1	Magnet

(2) Install a new gasket on the transmission oil pan SUB-ASSY (ATM).

(3) Install the transmission oil pan SUB-ASSY (ATM) to the transmission case with 20 bolts.
Standard value:T=7.0N·m {71kgf·cm} {5.2ft·lbf}

5. Installation of automatic transmission ASSY
(Refer to AT - 227)

Unit inspection

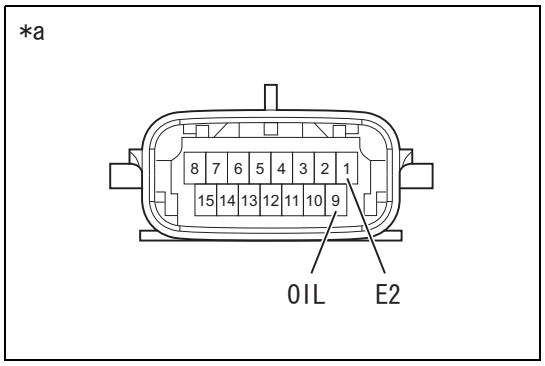

1. Transmission wire (oil temperature sensor) check

(1) Measure the resistance between the terminals.

Resistance

Inspection terminals	Inspection conditions	Standard value
9(OIL) - 1(E2)	Always	79Ω to 156kΩ
9 (OIL) - chassis ground	Always	10 k Ωor more
1 (E2) - chassis ground	Always	10 k Ωor more

Captions in illustration

*a	Connector not connected (Transmission wire (oil temperature sensor))

NOTE:

If the resistance is out of the oil temperature range in the table below, the handling performance of the vehicle may be degraded.

Resistance

Oil temperature	Standard value
10°C (50°F)	5 to 8kΩ
25°C (77°F)	2.5 to 4.5kΩ
110°C (230°F)	0.22 to 0.28kΩ

AT

Transmission valve body ASSY

Exploded view

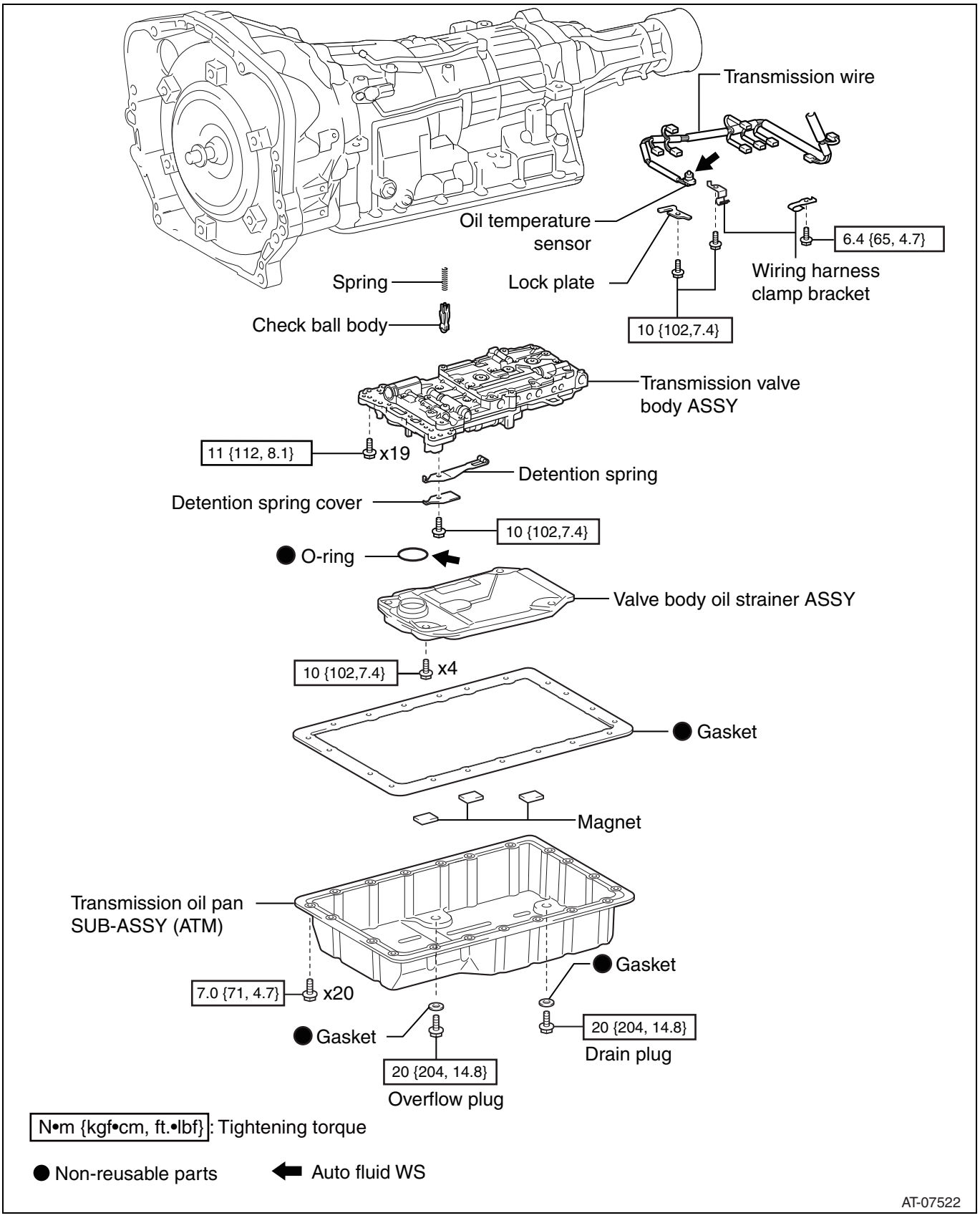

AT

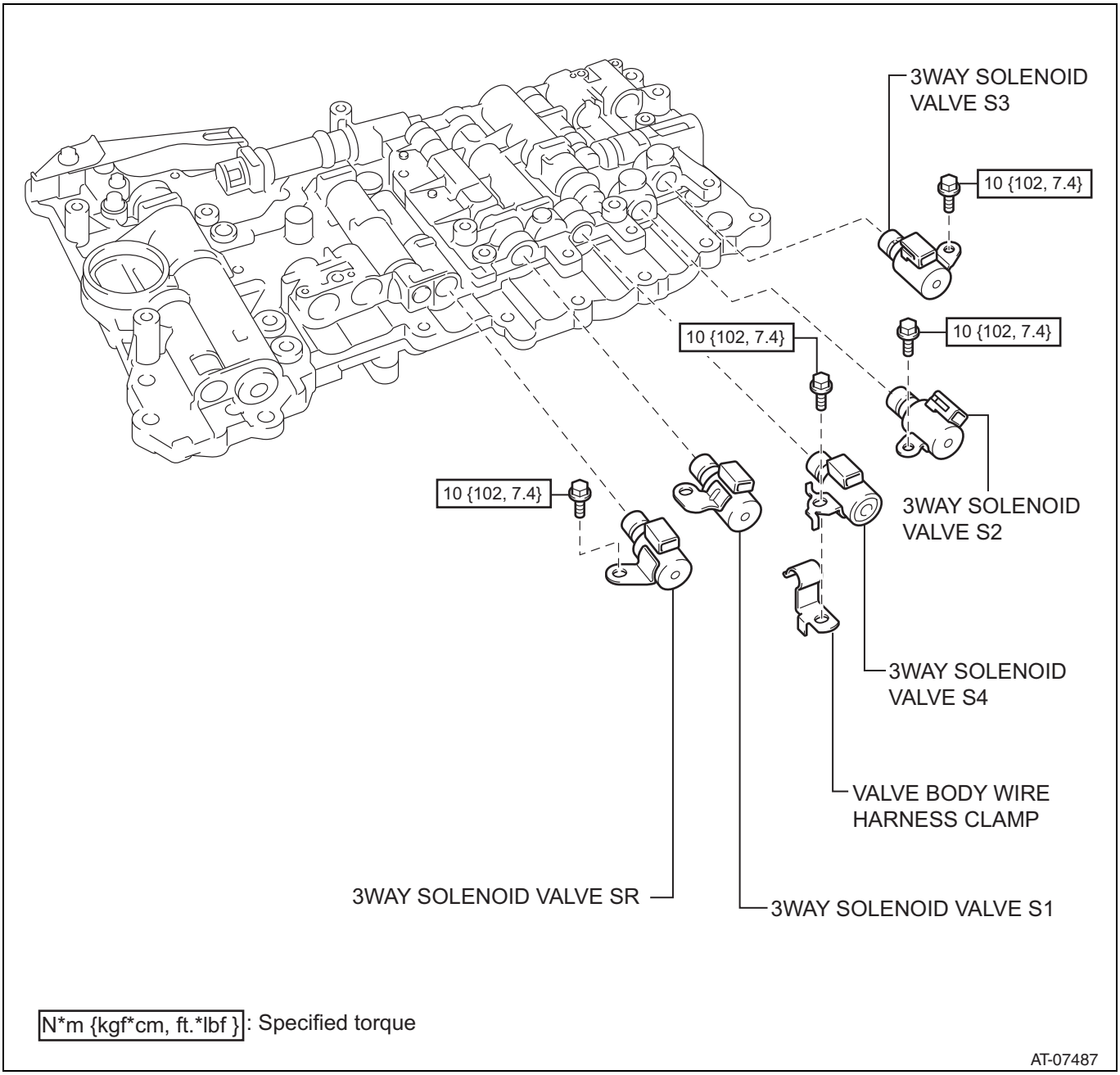

Removal

1. Disconnection of the battery ground terminal (Refer to BH - 31)
2. Removal of exhaust pipe SUB-ASSY FR
   (Refer to IE - 39)
3. Draining of automatic transmission fluid
   (1) Remove the drain plug and gasket to drain automatic transmission fluid.
   (2) Install the drain plug via a new gasket.
   Standard value:T=20N·m {204kgf·cm} {14.8ft·lbf}
4. Transmission oil pan SUB-ASSY (ATM) removal (refer to AT - 172)
5. Removal of valve body oil strainer ASSY (refer to AT - 172)
6. Disconnection of transmission wire (refer to AT - 173)

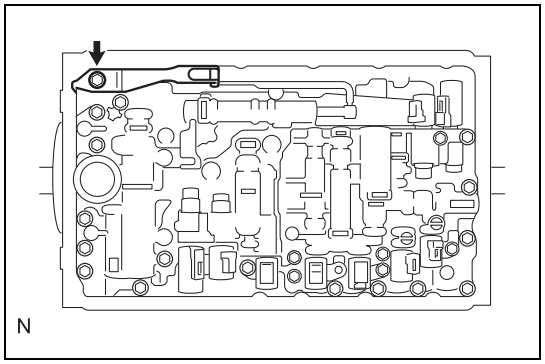

7. Removal of transmission valve body ASSY
   (1) Remove the bolt and then remove the detent spring cover and detent spring.

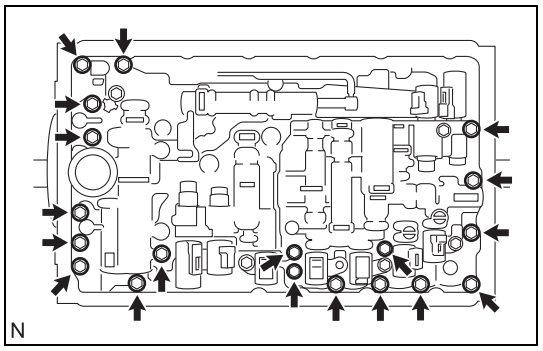

   (2) Remove 19 bolts to remove the transmission valve body ASSY from the automatic transmission case SUB-ASSY.

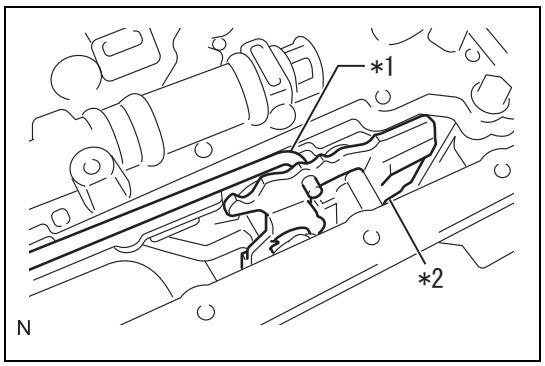

   (3) Remove the lever pin from the manual valve to remove the transmission valve body ASSY.

Captions in illustration

*1	Lever pin
*2	Manual valve

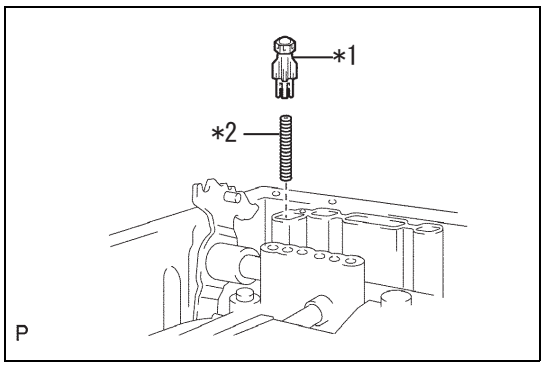

   (4) Remove the check ball body and spring.

Captions in illustration

*1	Check ball body
*2	Spring

CAUTION:
Be careful not to drop and lose the check ball body.

Disassembly

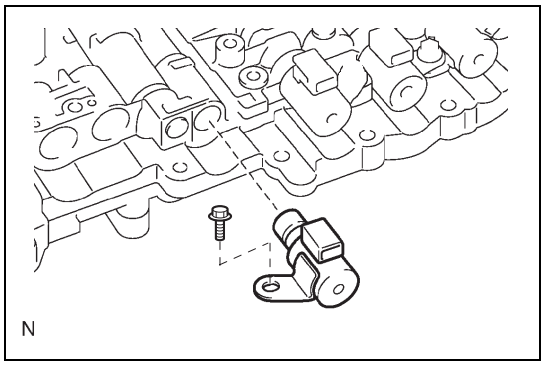

1. Removal of transmission 3 way solenoid ASSY (SR)
   (1) Remove the bolt to remove the transmission 3 way solenoid ASSY (SR).

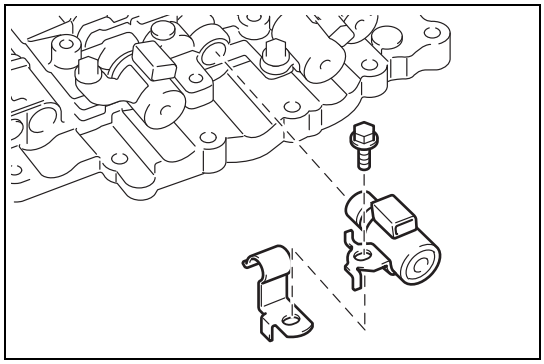

2. Removal of transmission 3 way solenoid ASSY (S4)
   (1) Remove the bolt to remove the transmission 3 way solenoid ASSY (S4) and harness clamp.

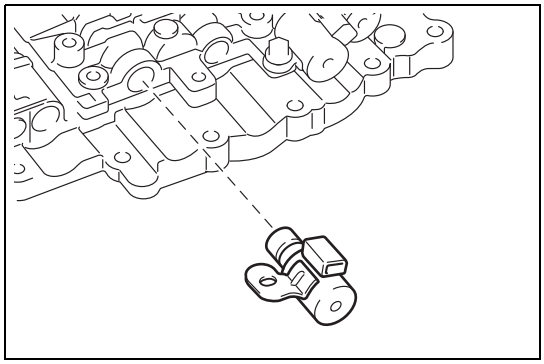

3. Removal of transmission 3 way solenoid ASSY (S1)
   (1) Remove the transmission 3 way solenoid ASSY (S1).

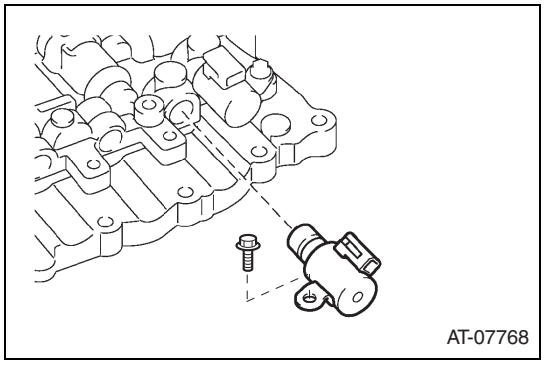

4. Removal of transmission 3 way solenoid ASSY (S2)
   (1) Remove the transmission 3 way solenoid ASSY (S2).

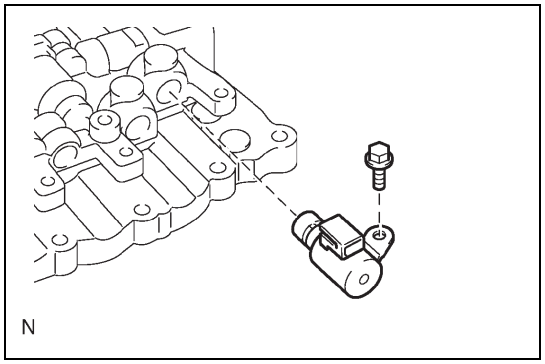

5. Removal of transmission 3 way solenoid ASSY (S3)
   (1) Remove the bolt to remove the transmission 3 way solenoid ASSY (S3).

Assembly

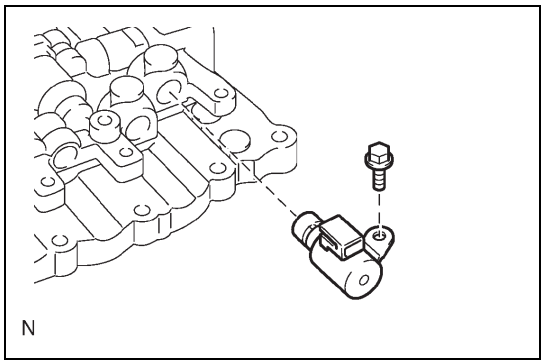

1. Installation of transmission 3 way solenoid ASSY (S3)
   (1) Install the transmission 3 way solenoid ASSY (S3) with a bolt.
   Standard value:T=10N·m {102kgf·cm} {7ft·lbf}

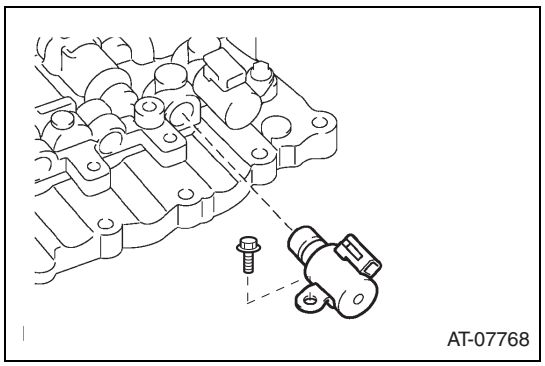

2. Installation of transmission 3 way solenoid ASSY (S2)
   (1) Install the transmission 3 way solenoid ASSY (S2).
   Standard value:T=10N·m {102kgf·cm} {7ft·lbf}

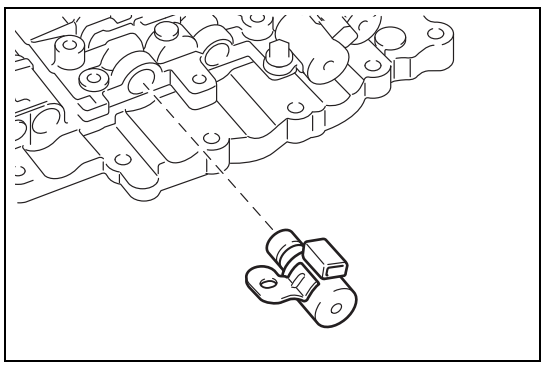

3. Installation of transmission 3 way solenoid ASSY (S1)
   (1) Install the transmission 3 way solenoid ASSY (S1).

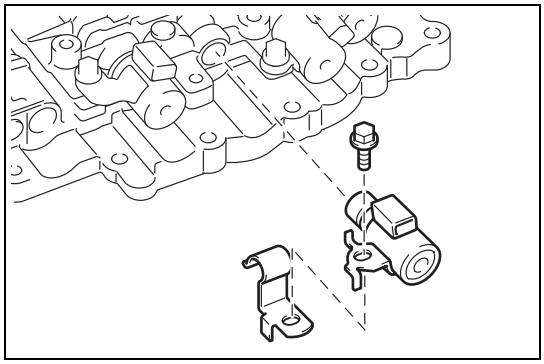

4. Installation of transmission 3 way solenoid ASSY (S4)
   (1) Install the transmission 3 way solenoid ASSY (S4) and harness clamp with a bolt.
   Standard value:T=10N·m {102kgf·cm} {7.4ft·lbf}
   CAUTION:
   Do not contact the S1 solenoid connector with the bolt when tightening the bolt.

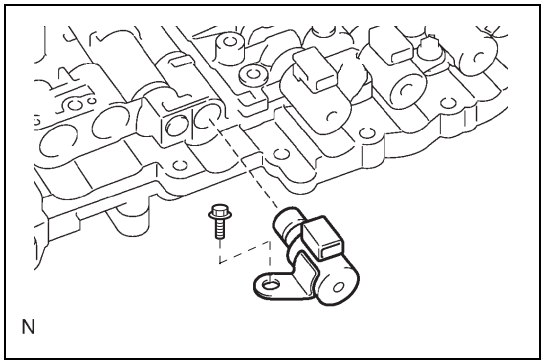

5. Installation of transmission 3 way solenoid ASSY (SR)
   (1) Install the transmission 3 way solenoid ASSY (SR) with a bolt.
   Standard value:T=10N·m {102kgf·cm} {7.4ft·lbf}

Installation

1. Installation of transmission valve body ASSY
   (1) Insert the spring and the check ball body into the transmission case.

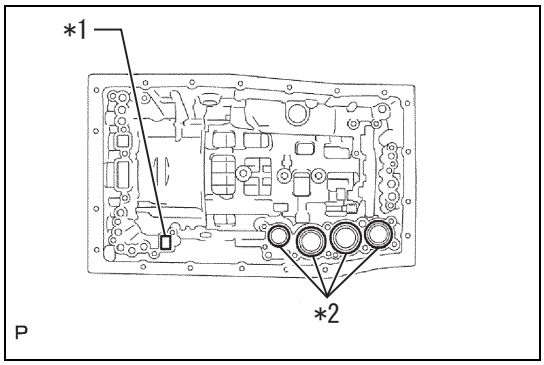

   (2) Make sure that the accumulator piston, spring, and check ball body are installed to the transmission case.

Captions in illustration

*1	Check ball body
*2	Accumulatorpiston

NOTE:
If the accumulatorpiston, spring, and check ball body come off, apply auto fluid WS and install them.

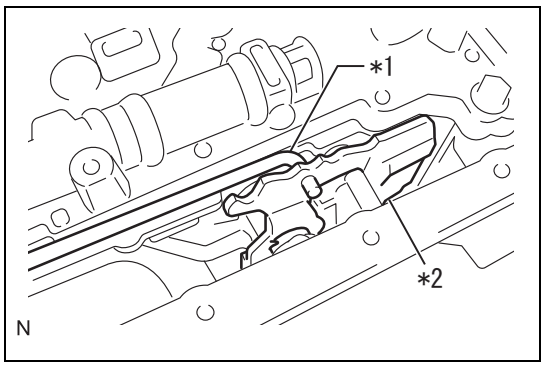

   (3) Connect the lever pin to the manual valve hole.

Captions in illustration

*1	Lever pin
*2	Manual valve

AT

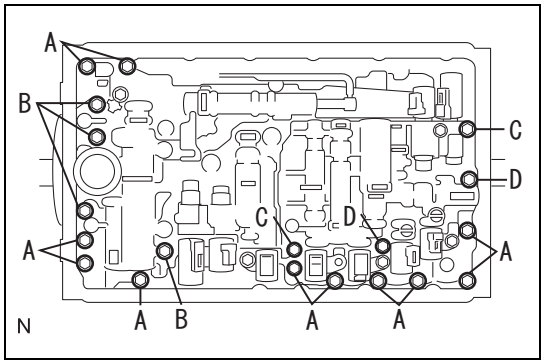

(4) Install the transmission valve body ASSY with 19 bolts.
Standard value:T=11N·m {112kgf·cm} {8.1ft·lbf}
NOTE:
Bolt under head length:
- 25 mm {0.984 in} (Bolt A)
- 36 mm {1.417 in} (Bolt B)
- 45 mm {1.772 in} (Bolt C)
- 50 mm {1.969 in} (Bolt D)

(5) Install the detent spring and detent spring cover with a bolt.
Standard value:T=10N·m {102kgf·cm} {7.4ft·lbf}

2. Transmission wire connection (refer toAT - 174)
3. Installation of valve body oil strainer ASSY (refer to AT - 175)
4. Installation of transmission oil pan SUB-ASSY (ATM) (refer to AT - 175)
5. Installation of exhaust pipe SUB-ASSY FR (refer to IE - 44)
6. Connection of battery ground terminal (refer to BH - 35)
7. Fill of automatic transmission fluid (refer to AT - 163)

Unit inspection

AT

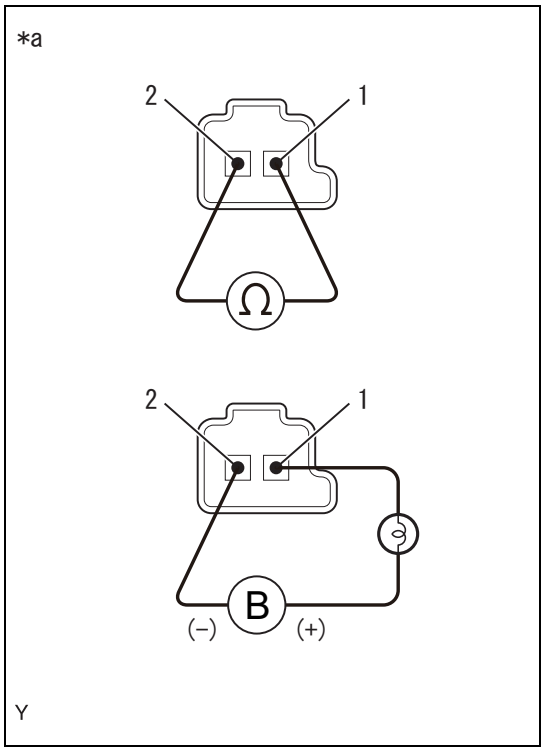

1. Check of clutch control solenoid No.1 (SL2)
(1) Measure the resistance between the terminals.

Resistance

Inspection terminals	Inspection conditions	Standard value
Clutch control solenoid No.1 (SL2) terminal 1 - terminal 2	20°C (68°F)	5.0 to 5.6Ω

Captions in illustration

*a	Connector not connected (Clutch control solenoid No.1 (SL2))

(2) Connect the battery positive to terminal 1 of the clutch control solenoid No.1 (SL2) via the 12 V-21 W valve and check that the valve in the solenoid operates when connecting the battery ground to terminal 2.
Criteria: Operates (with operating noise)

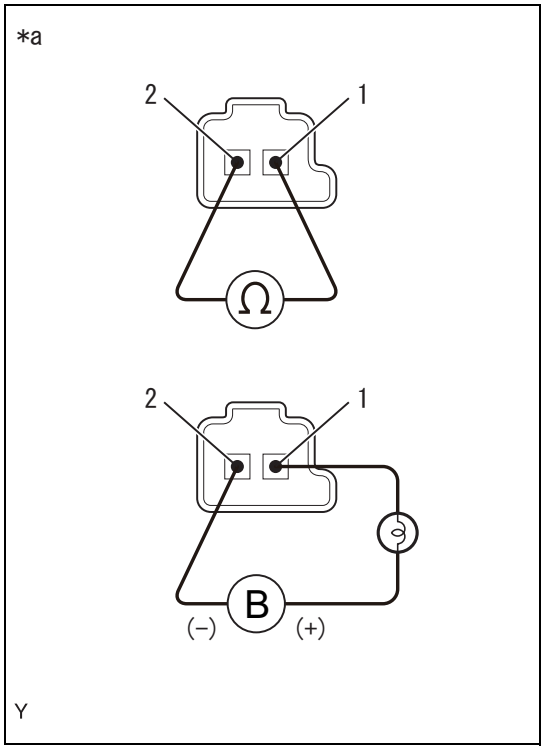

2. Check of lock-up control solenoid (SLU)
   (1) Measure the resistance between the terminals.

Resistance

Inspection terminals	Inspection conditions	Standard value
Lock-up control solenoid (SLU) terminal 1 - terminal 2	20°C (68°F)	5.0 to 5.6Ω

Captions in illustration

*a	Connector not connected (Lock-up control solenoid (SLU))

   (2) Connect the battery positive to terminal 2 of the lock-up control solenoid (SLU) via the 12 V-21 W valve and check that the valve in the solenoid operates when connecting the battery ground to terminal 1.
   Criteria: Operates (with operating noise)

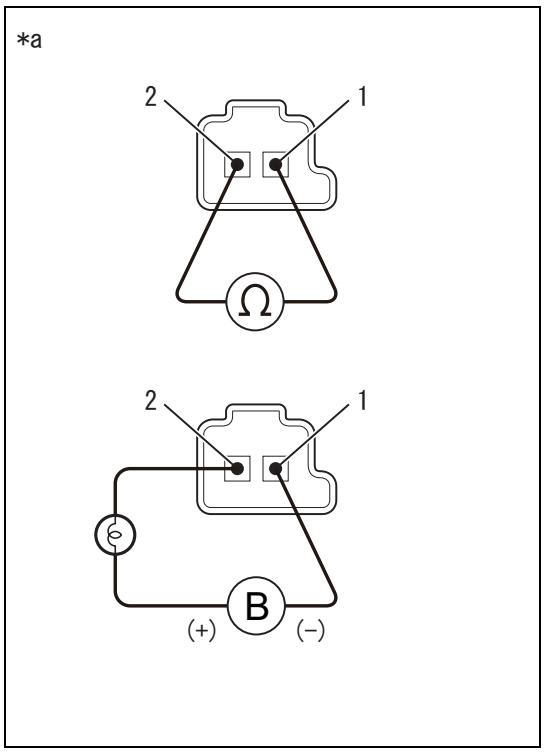

3. Check of line pressure control solenoid ASSY (SLT)
   (1) Measure the resistance between the terminals.

Resistance

Inspection terminals	Inspection conditions	Standard value
Line pressure control solenoid ASSY (SLT) terminal 1 - terminal 2	20°C (68°F)	5.0 to 5.6Ω

Captions in illustration

*a	Connector not connected (Line pressure control solenoid ASSY (SLT))

   (2) Connect the battery positive to terminal 2 of the line pressure control solenoid ASSY (SLT) via the 12 V-21 W valve and check that the valve in the solenoid operates when connecting the battery ground to terminal 1.
   Criteria: Operates (with operating noise)

AT

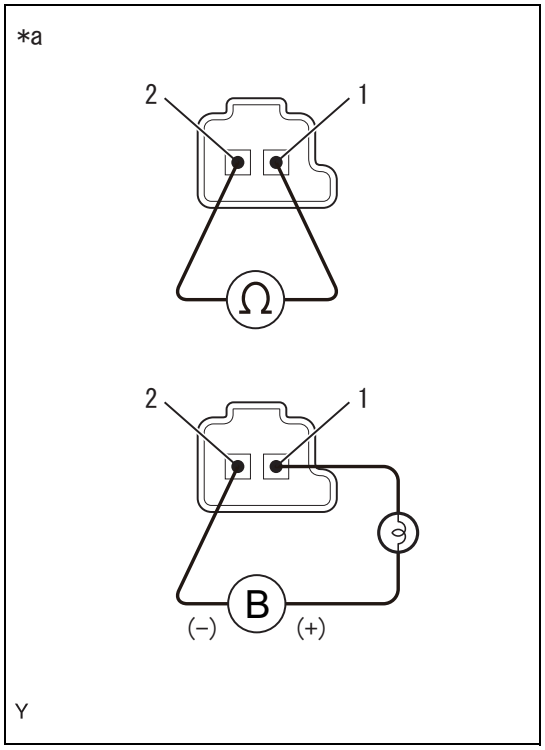

4. Check of clutch control solenoid No.1(SL1)
   (1) Measure the resistance between the terminals.

Resistance

Inspection terminals	Inspection conditions	Standard value
Clutch control solenoid No.1 (SL1) terminal 1 - terminal 2	20°C (68°F)	5.0 to 5.6Ω

Captions in illustration

*a	Connector not connected (Clutch control solenoid No.1 (SL1))

   (2) Connect the battery positive to terminal 1 of the clutch control solenoid No.1 (SL1) via the 12 V-21 W valve and check that the valve in the solenoid operates when connecting the battery ground to terminal 2.
   Criteria: Operates (with operating noise)

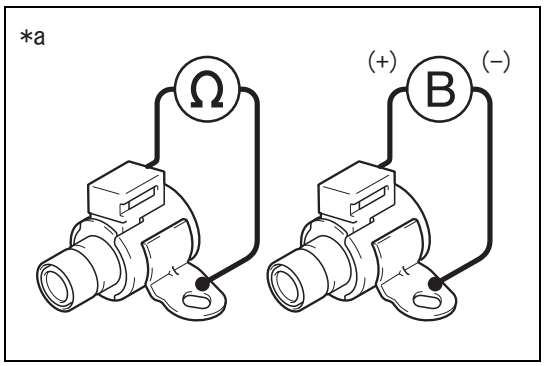

5. Check of transmission 3 way solenoid ASSY (SR)
   (1) Measure the resistance between the terminals.

Resistance

Inspection terminals	Inspection conditions	Standard value
Transmission 3 way solenoid ASSY (SR) connector - body	20°C (68°F)	11 to 15Ω

Captions in illustration

*a	Connector not connected (Transmission 3 way solenoid ASSY (SR))

   (2) Connect the battery positive to the connector of the transmission 3 way solenoid ASSY (SR) and check that the valve in the solenoid operates when connecting the battery ground to the solenoid body.
   Criteria: Operates (with operating noise)

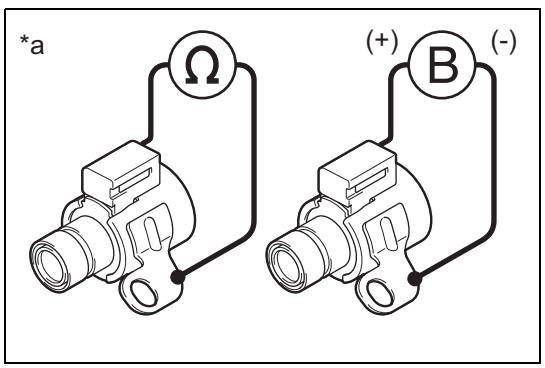

6. Check of transmission 3 way solenoid ASSY (S1)
   (1) Measure the resistance between the terminals.

Resistance

Inspection terminals	Inspection conditions	Standard value
Transmission 3 way solenoid ASSY (S1) connector - body	20°C (68°F)	11 to 15Ω

Captions in illustration

*a	Connector not connected (Transmission 3 way solenoid ASSY (S1))

   (2) Connect the battery positive to the connector of the transmission 3 way solenoid ASSY (S1) and check that the valve in the solenoid operates when connecting the battery ground to the solenoid body.
   Criteria: Operates (with operating noise)

AT

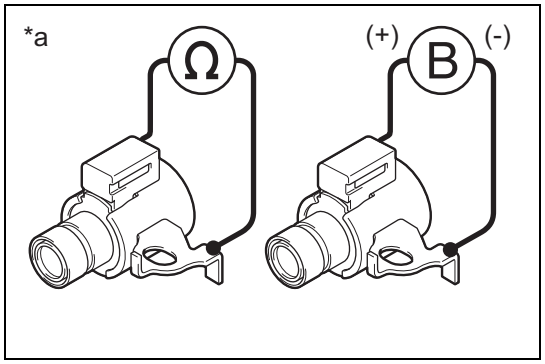

7. Check of transmission 3 way solenoid ASSY (S4)
   (1) Measure the resistance between the terminals.

Resistance

Inspection terminals	Inspection conditions	Standard value
Transmission 3 way solenoid ASSY (S4) connector - body	20°C (68°F)	11 to 15Ω

Captions in illustration

*a	Connector not connected (Transmission 3 way solenoid ASSY (S4))

   (2) Connect the battery positive to the connector of the transmission 3 way solenoid ASSY (S4) and check that the valve in the solenoid operates when connecting the battery ground to the solenoid body.
   Criteria: Operates (with operating noise)

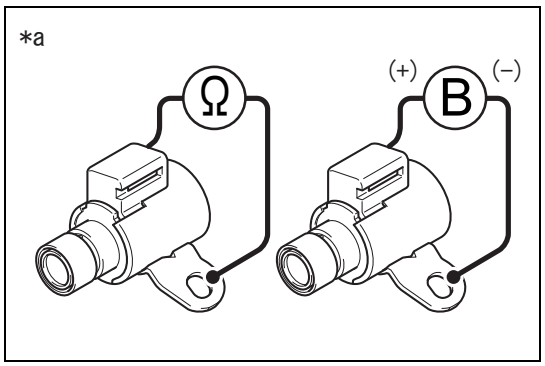

8. Check of transmission 3 way solenoid ASSY (S2)
   (1) Measure the resistance between the terminals.

Resistance

Inspection terminals	Inspection conditions	Standard value
Transmission 3 way solenoid ASSY (S2) connector - body	20°C (68°F)	11 to 15Ω

Captions in illustration

*a	Connector not connected (Transmission 3 way solenoid ASSY (S2))

   (2) Connect the battery positive to the connector of the transmission 3 way solenoid ASSY (S2) and check that the valve in the solenoid operates when connecting the battery ground to the solenoid body.
   Criteria: Operates (with operating noise)

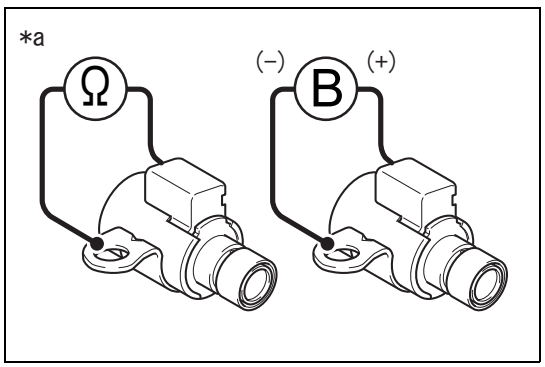

9. Check of transmission 3 way solenoid ASSY (S3)
   (1) Measure the resistance between the terminals.

Resistance

Inspection terminals	Inspection conditions	Standard value
Transmission 3 way solenoid ASSY (S3) connector - body	20°C (68°F)	11 to 15Ω

Captions in illustration

*a	Connector not connected (Transmission 3 way solenoid ASSY (S3))

   (2) Connect the battery positive to the connector of the transmission 3 way solenoid ASSY (S3) and check that the valve in the solenoid operates when connecting the battery ground to the solenoid body.
   Criteria: Operates (with operating noise)

Neutral start switch ASSY

Exploded view

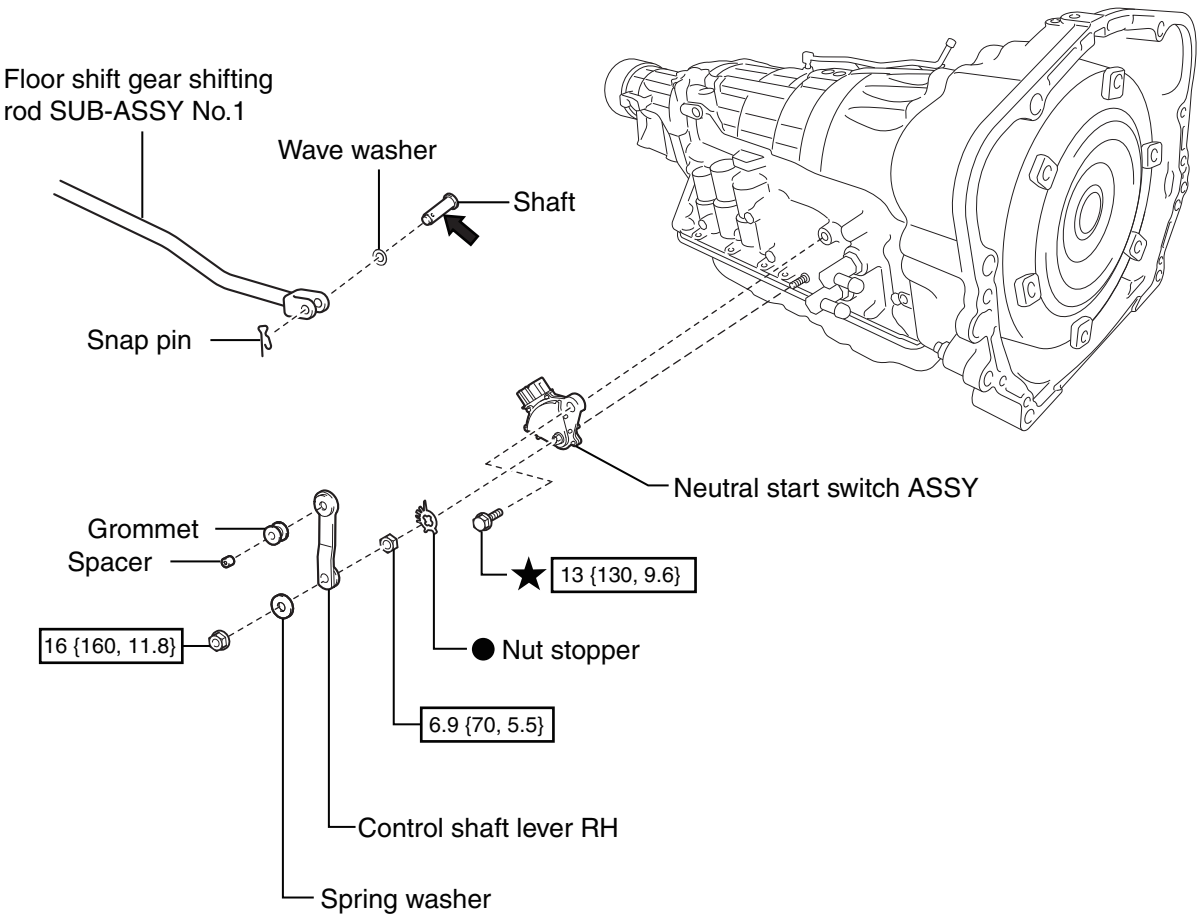

AT

Removal

1. Disconnection of the battery ground terminal (Refer to BH - 31)
2. Removal of under cover front AL (refer to IE - 39)
3. Removal of under cover COMPL T/M (refer to IE - 40)
4. Removal of exhaust pipe ASSY FR (refer to IE - 40)

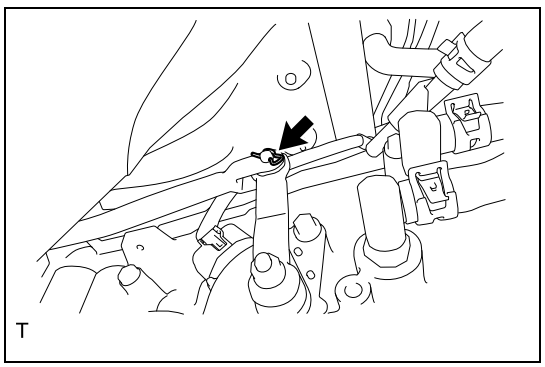

5. Disconnection of floor shift gear shifting rod SUB-ASSY No.1
   (1) Remove the snap pin, the wave washer, and the shaft. Then, disconnect the floor shift gear shifting rod SUB-ASSY No.1 from the control shaft lever RH.

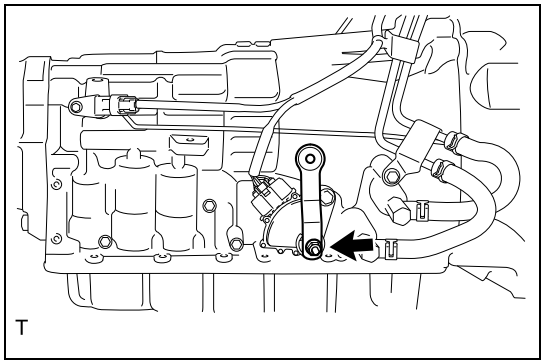

6. Removal of control shaft lever RH
   (1) Remove the nut and the spring washer, and then remove the control shaft lever RH from the neutral start switch ASSY.

7. Removal of neutral start switch ASSY
   (1) Disconnect the connector from the neutral start switch ASSY.

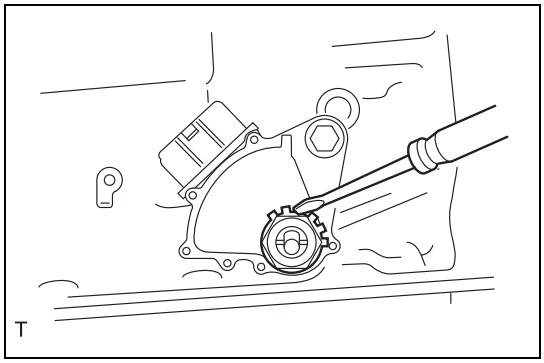

   (2) Use a thin flat tip screwdriver to release the crimping of the nut stopper and remove the nut and the nut stopper.

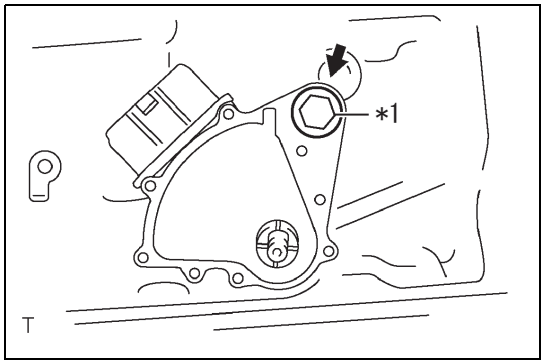

   (3) Remove the bolt and then remove the neutral start switch ASSY.

Captions in illustration

*1	Set bolt

NOTE:
Do not turn the manual valve shaft lever before installing the neutral start switch ASSY. If the manual valve shaft lever is turned, it may be disconnected inside AT.

Installation

1. Installation of neutral start switch ASSY
   NOTE:
   Do not turn the manual valve shaft lever before installing the neutral start switch ASSY. If the manual valve shaft lever is turned, it may be disconnected inside AT.
   (1) Clean the bolt and the bolt hole.
   (2) Engage the neutral start switch ASSY to the manual valve lever shaft.
   (3) Temporarily install the bolt to the neutral start switch ASSY.

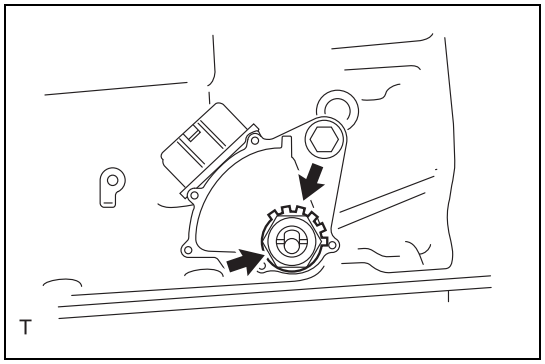

(4) Install a new nut stopper and a nut.
Standard value:T=6.9N·m {70kgf·cm} {5.1ft·lbf}

(5) Temporarily install the control shaft lever RH to the neutral start switch ASSY with the spring washer and the nut.

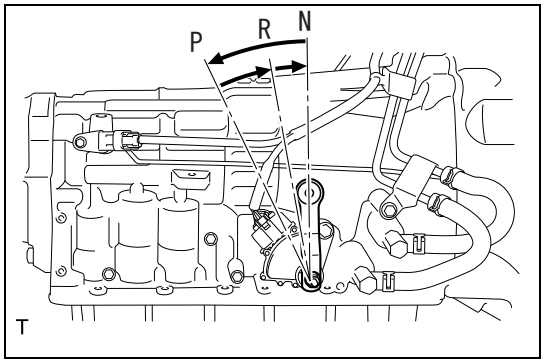

(6) Turn the control shaft lever RH toward the rear side of the vehicle until it stops, then turn it back from that position by 2 notches toward the front side of the vehicle to set to N position.

(7) Remove the nut and the spring washer, and then remove the control shaft lever RH from the neutral start switch ASSY.

AT

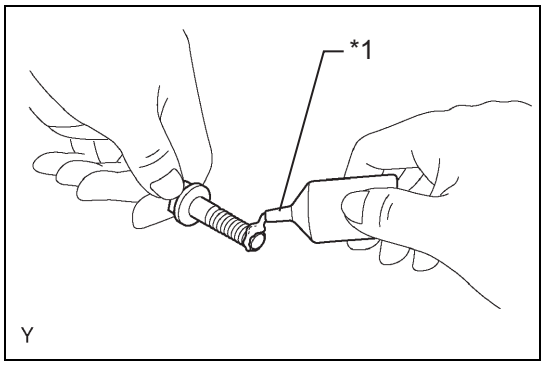

(8) Apply Adhesive to 2 or 3 threads at the tip of the bolt.

Captions in illustration

*1	Adhesive

Adhesive: Three Bond 1344 or the equivalent

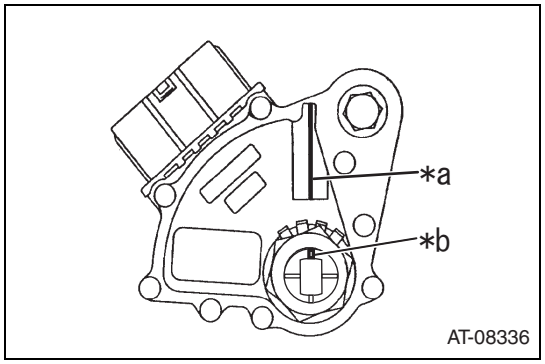

(9) Align the neutral reference line and the kerf.

Captions in illustration

*a	Neutral reference line
*b	Kerf

(10) Tighten the set bolt while holding the neutral start switch ASSY.
Standard value:T=13N·m {133kgf·cm} {9.6ft·lbf}

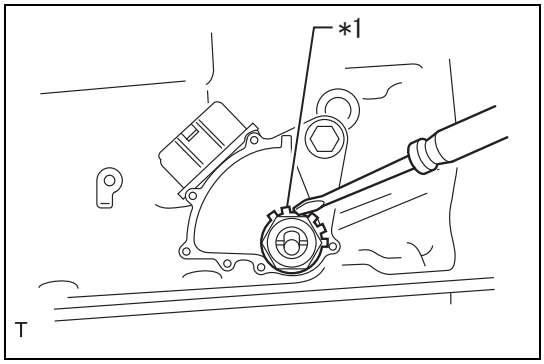

(11) Use a flat tip screwdriver to crimp the claw of the nut stopper.

Captions in illustration

*1	Nut stopper

CAUTION:
Check that the nut is securely tightened.

(12) Connect the connector to the neutral start switch ASSY.

2. Installation of control shaft lever RH
   (1) Install the control shaft lever RH to the neutral start switch ASSY with the spring washer and the nut.
   Standard value:T=16N·m {160kgf·cm} {11.8ft·lbf}
3. Connection of floor shift gear shifting rod SUB-ASSY No.1
   (1) Make sure that the grommet and spacer are attached to the control shaft lever RH.
   (2) Connect the floor shift gear shifting rod SUB-ASSY No.1 to the control shaft lever RH with the snap pin, the wave washer, and the shaft.
4. Installation of exhaust pipe ASSY FR
   (Refer to IE - 44)
5. Connection of battery ground terminal (Refer to BH - 35)
6. Check of select lever position (refer to AT - 210)
7. Neutral start switch ASSY check (Refer to AT - 189)
8. Initialization when removing/installing battery terminals
   (Refer to IN - 6)

AT

Adjustment

1. Adjustment of neutral start switch ASSY
   (1) Set the select lever to N position.

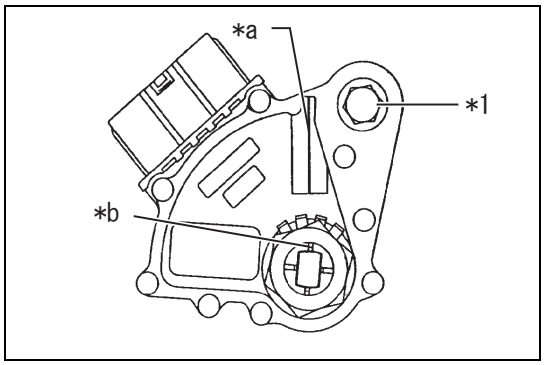

(2) Loosen the set bolt on the neutral start switch ASSY.

Captions in illustration

*1	Set bolt
*a	Neutral reference line
*b	Kerf

(3) Move the neutral start switch ASSY to align the neutral reference line and the kerf.
(4) Tighten the set bolt.
Standard value:T=13N·m {130kgf·cm} {9.6ft·lbf}
(5) After the adjustment, check the neutral start switch ASSY.
(Refer to AT - 189)

On-vehicle inspection

1. Check of neutral start switch ASSY
   (1) Pull the parking brake and turn the ignition switch to ON.
   (2) Depress the brake pedal and check that the engine cannot start when the select lever is in positions other than "N" or "P".

(3) Check that the shift position is displayed on the shift position indicator in the combination meter and that the reverse warning buzzer sounds at "R" position.

Unit inspection

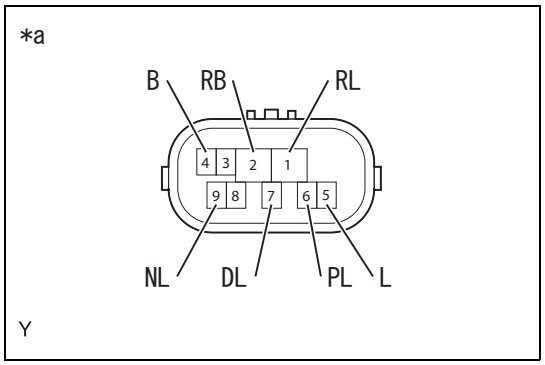

1. Check of neutral start switch ASSY
   (1) Measure the resistance between the terminals.
   Resistance

Inspection terminals	Inspection conditions	Standard value
2(RB) - 6(PL) 4(B) - 5(L)	Select lever in P position	Less than 1 Ω
2(RB) - 1(RL)	Select lever in R position	Less than 1 Ω
2(RB) - 9(NL) 4(B) - 5(L)	Select lever in N position	Less than 1 Ω
2(RB) - 7(DL)	• Select lever in D position • When select lever is in M position and shifted to "+" or "-"	Less than 1 Ω
2(RB) - 6(PL) 4(B) - 5(L)	Select lever in any other than P position	10 kΩ or more
2(RB) - 1(RL)	Select lever in any other than R position	10 kΩ or more
2(RB) - 9(NL) 4(B) - 5(L)	Select lever in any other than N position	10 kΩ or more
2(RB) - 7(DL)	• Select lever in any other than D position • Except when select lever is in M position and shifted to "+" or "-"	10 kΩ or more

Captions in illustration

*a	Connector not connected (Neutral start switch ASSY)

AT

Oil cooler ASSY

Exploded view

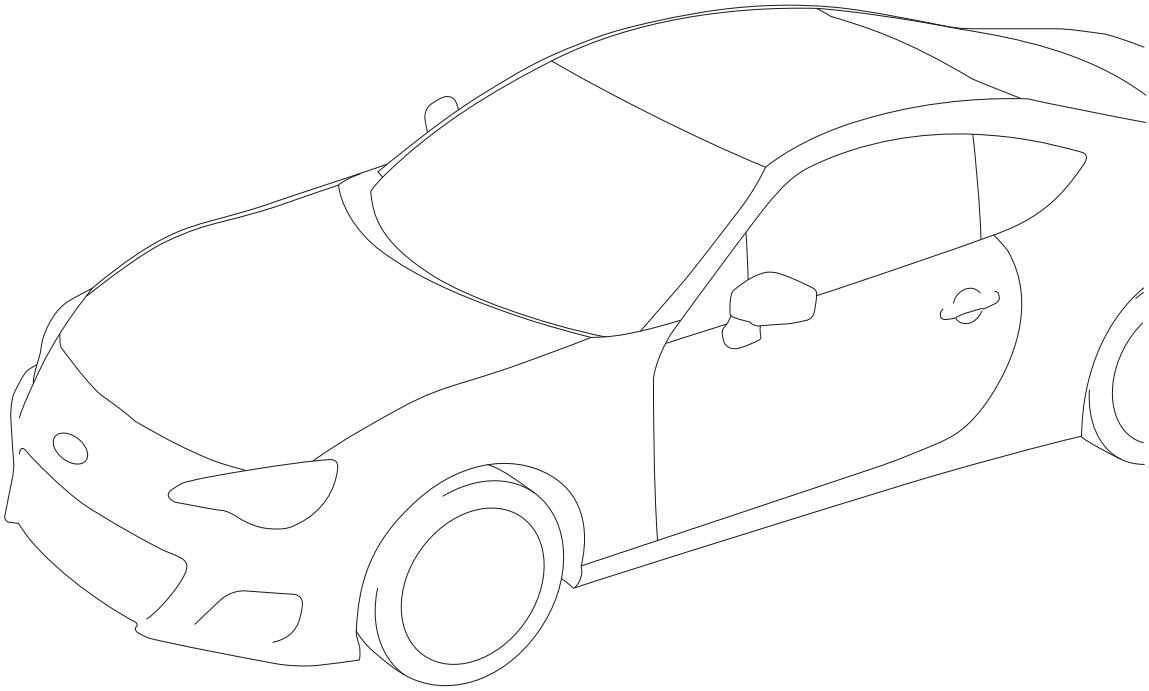

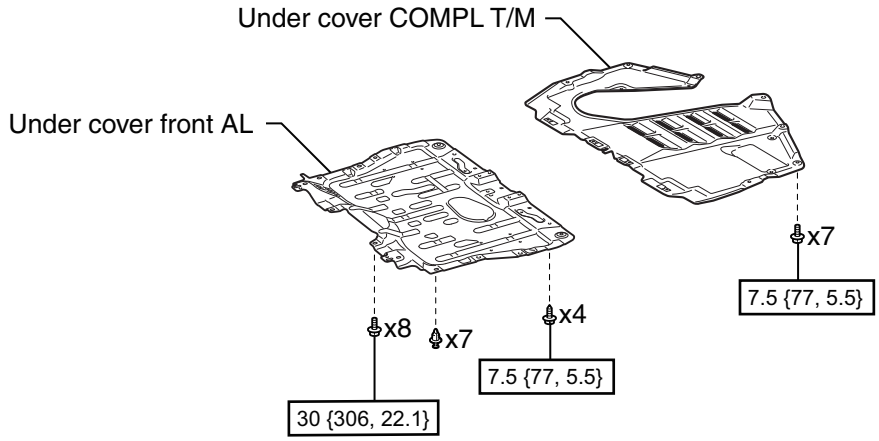

N*m {kgf*cm, ft.*lbf}: Tightening torque

AT-07769

AT

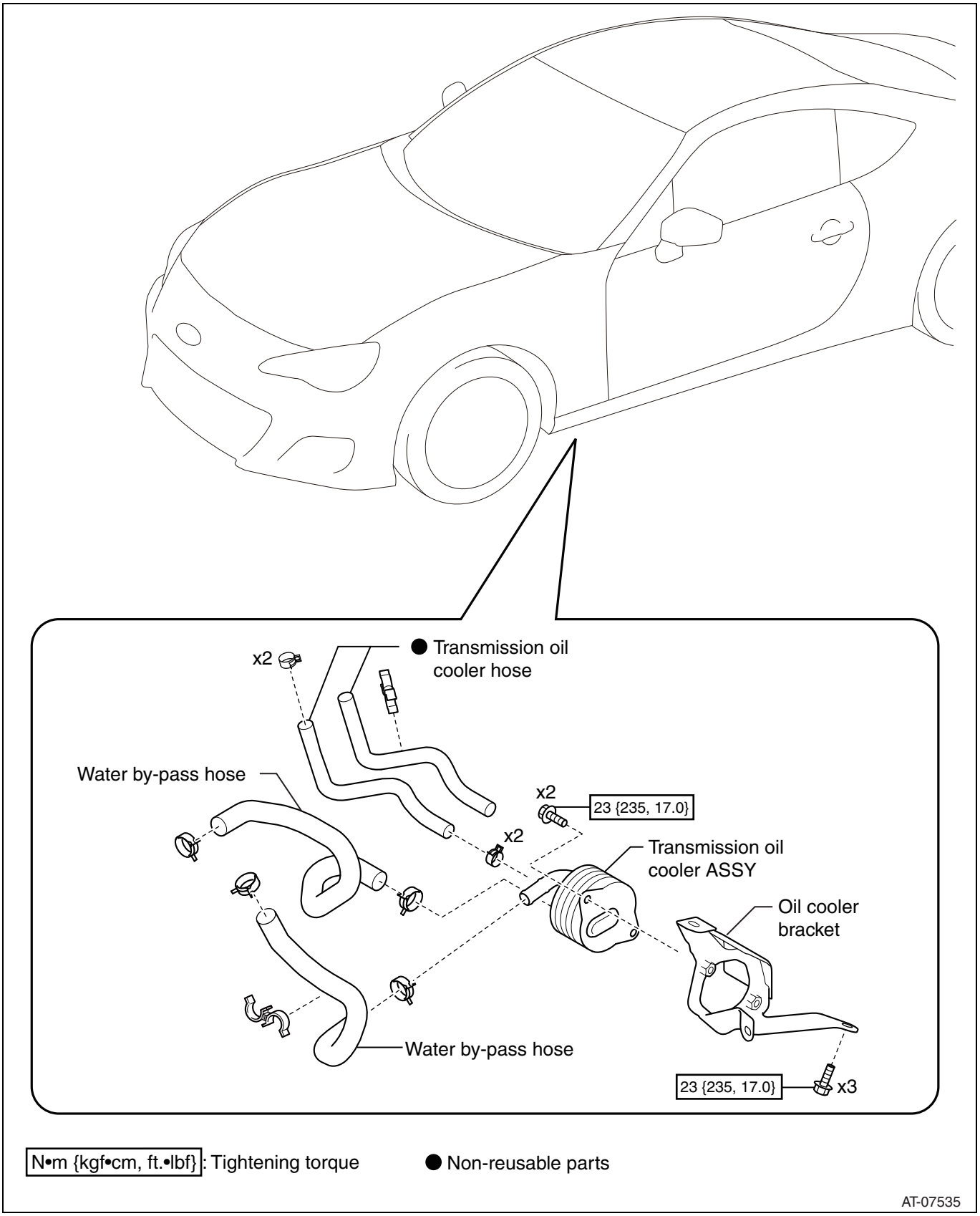

AT

Removal

1. Removal of under cover front AL (refer to IE - 39)
2. Removal of under cover COMPL T/M (refer to IE - 40)
3. Drain of coolant (SUBARU genuine Super Coolant) (refer to CO - 16)

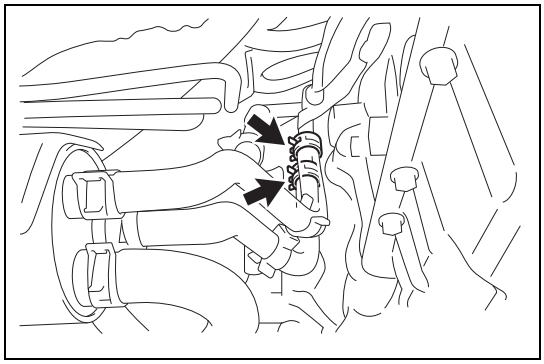

4. Disconnection of transmission oil cooler hose
   (1) Move 2 clamps and disconnect the 2 oil cooler hoses.
   CAUTION:
   Have a container ready for catching ATF remaining in the transmission oil cooler hoses.

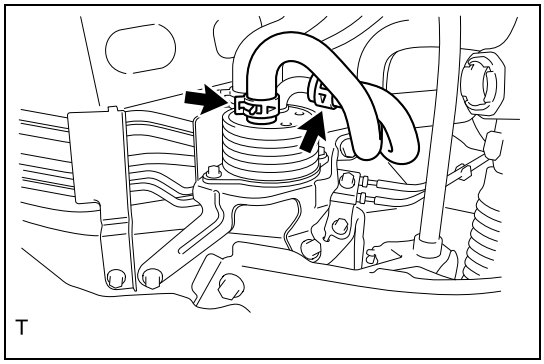

5. Disconnection of water by-pass hose
   (1) Move 2 clamps and disconnect the 2 water by-pass hoses from the transmission oil cooler ASSY.
   CAUTION:
   Have a container ready for catching coolant remaining in the water by-pass hoses.

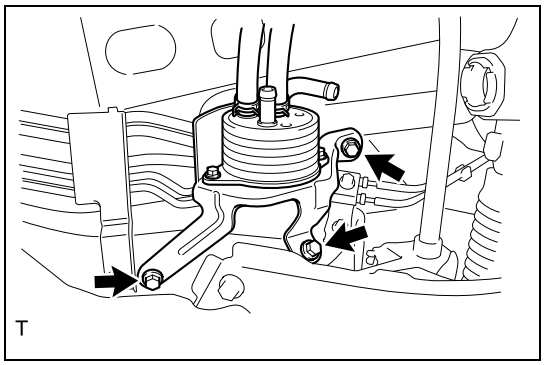

6. Removal of transmission oil cooler ASSY
   (1) Remove 3 bolts to remove the transmission oil cooler ASSY.

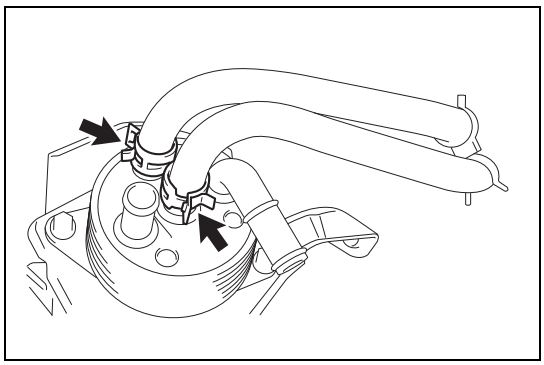

   (2) Move 2 clamps and remove the 2 transmission oil cooler hoses.

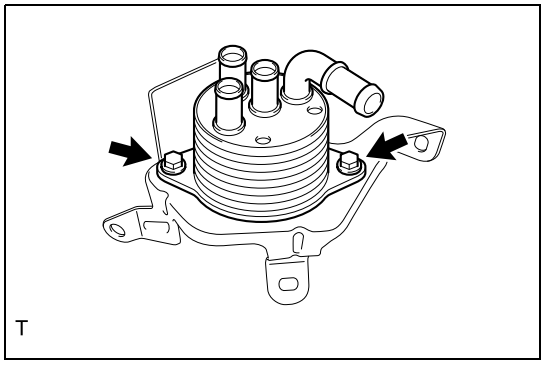

   (3) Remove 2 bolts to remove the transmission oil cooler from the oil cooler bracket.

Installation

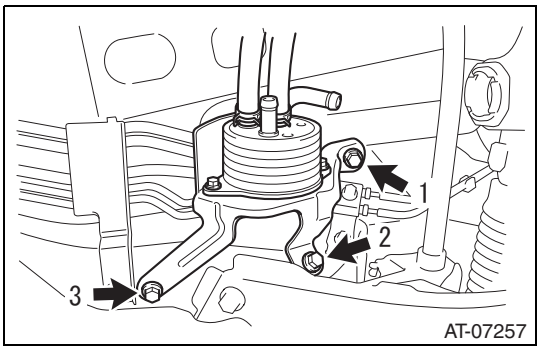

1. Installation of transmission oil cooler ASSY.
   (1) Install the transmission oil cooler ASSY to the oil cooler bracket with 2 bolts.
   Standard value:T=23N·m {235kgf·cm} {17ft·lbf}
   (2) Connect 2 new transmission oil cooler hoses to the transmission oil cooler ASSY with 2 clamps.
   (3) Temporarily tighten bolt 1 .
   (4) Install 2 bolts and tighten them in the order of 2 to 3, with the oil cooler bracket fitted to the vehicle by hand.
   Standard value:T=23N·m {235kgf·cm} {17ft·lbf}
   (5) Tighten bolt 1.
   Standard value:T=23N·m {235kgf·cm} {17ft·lbf}

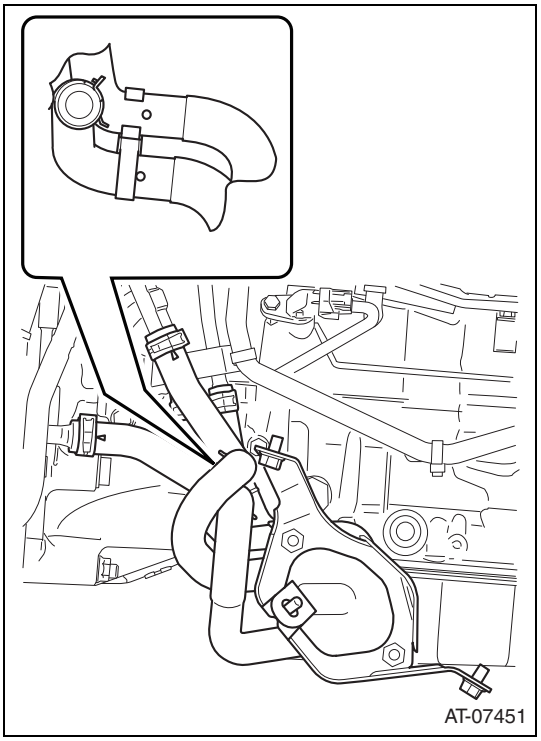

2. Connection of water by-pass hose
   (1) Connect 2 water by-pass hoses to the transmission oil cooler ASSY with 2 clamps.
   (2) Install a clamp to the both water bypass hoses.

AT

3. Connection of transmission oil cooler hose
   (1) Connect 2 transmission oil cooler hoses to the transmission oil cooler ASSY with 2 clamps.
   CAUTION:
   - Prevent the clamp claws from interfering with the hoses.
   - Align the painted position of the oil cooler hose until it comes to the center of the hose when viewed vertically from the bracket surface of the oil cooler tube.
   - Prevent the oil cooler hoses and the water bypass hose from interfering with each other or with other parts.

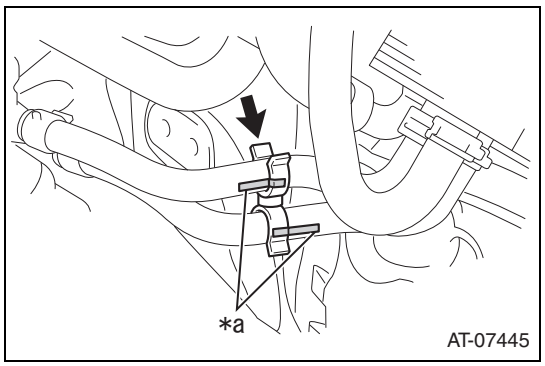

   (2) Install a clamp to the positions of the oil cooler hoses shown in the figure.

Captions in illustration

*a	Paint mark

4. Fill of coolant (SUBARU genuine Super Coolant) (refer to CO - 16)

5. Leakage check of coolant (SUBARU genuine Super Coolant) (refer to CO - 2)
6. Installation of under cover COMPL T/M (refer to IE - 46)
7. Installation of under cover front AL (refer to IE - 46)

Select lever

Exploded view

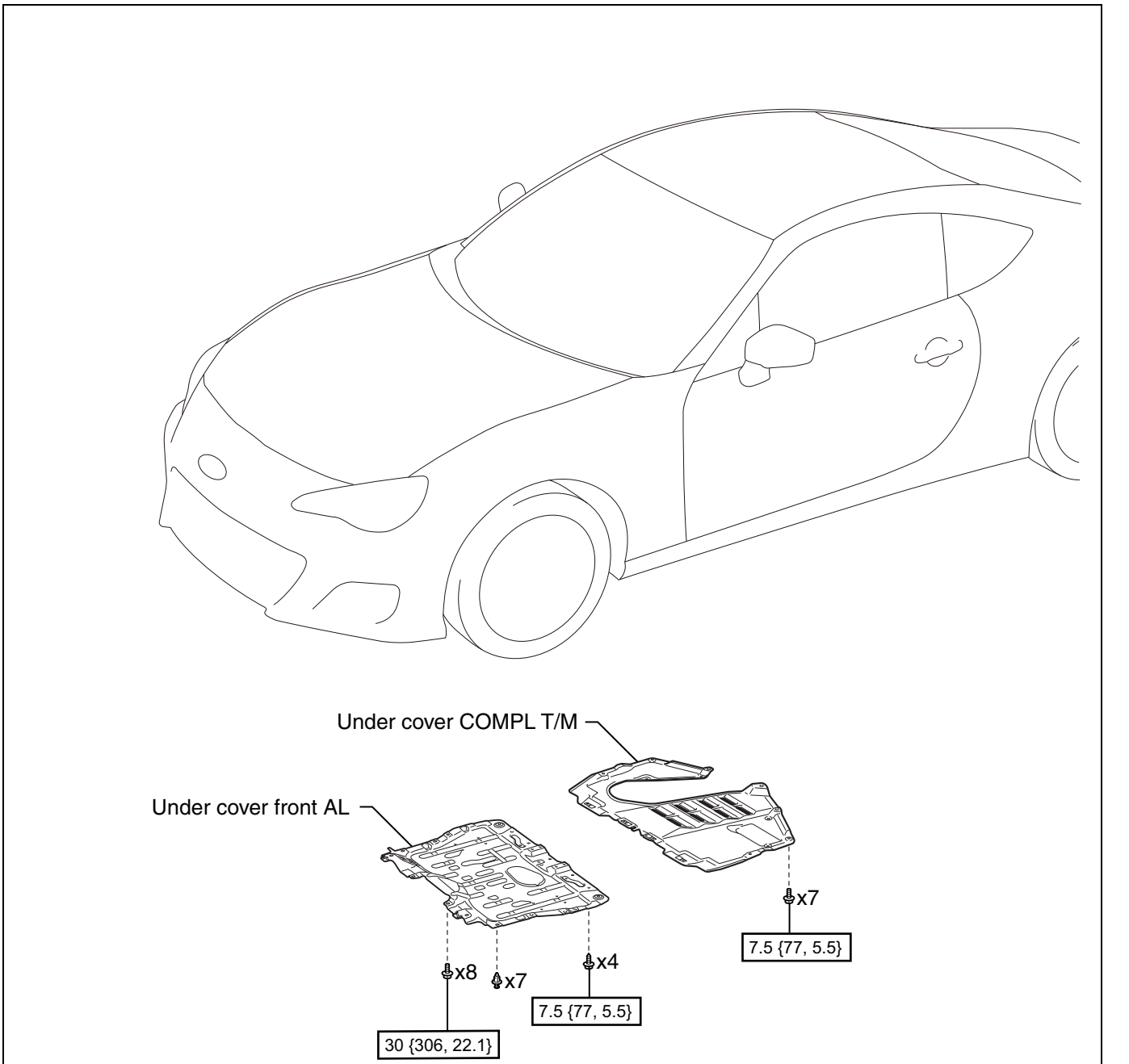

N*m {kgf*cm, ft.*lbf}: Tightening torque

AT-07769

AT

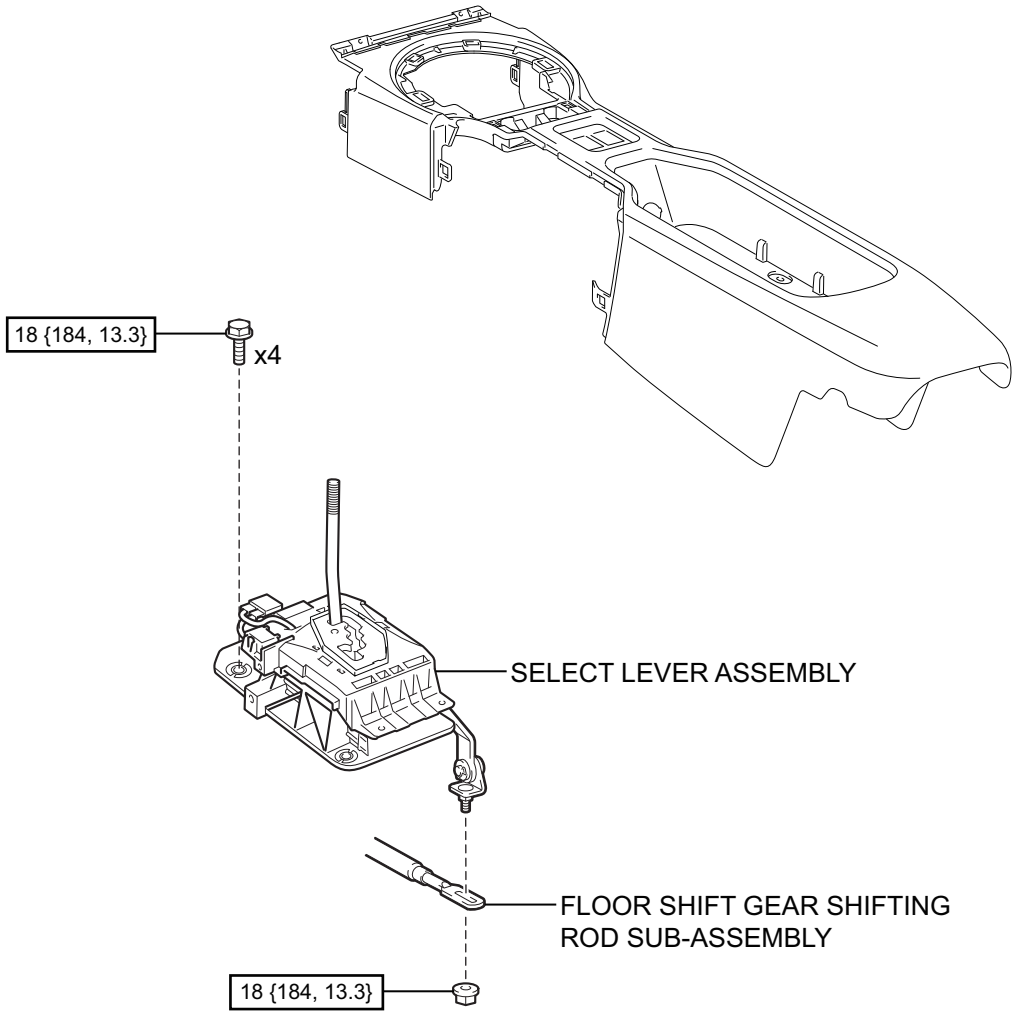

N*m {kgf*cm, ft.*lbf} : Specified torque

AT-07496

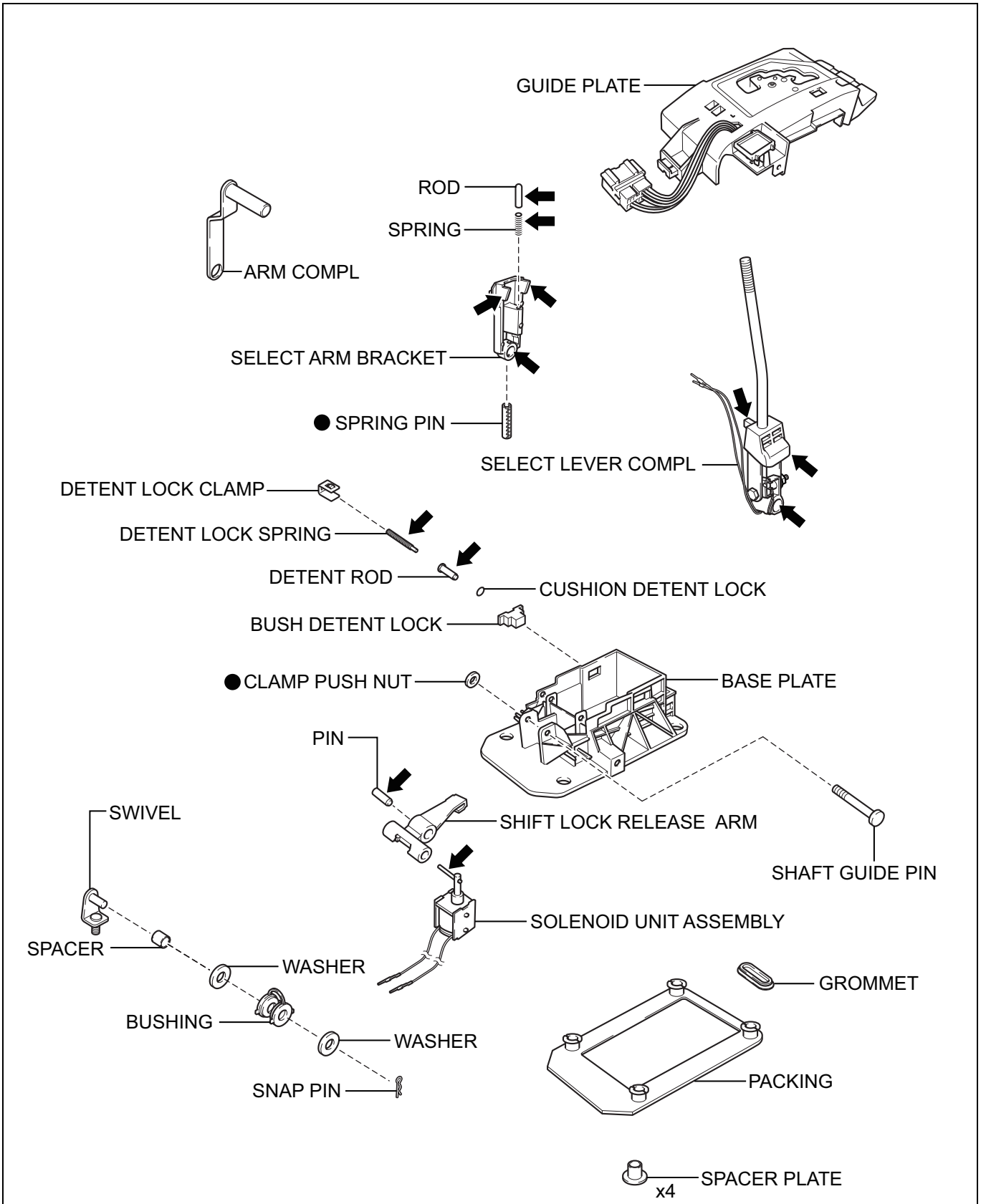
GUIDE PLATE
ROD
SPRING
ARM COMPL
SELECT ARM BRACKET
● SPRING PIN
SELECT LEVER COMPL
DETENT LOCK CLAMP
DETENT LOCK SPRING
DETENT ROD
CUSHION DETENT LOCK
BUSH DETENT LOCK
● CLAMP PUSH NUT
BASE PLATE
PIN
SHIFT LOCK RELEASE ARM
SHAFT GUIDE PIN
SWIVEL
SOLENOID UNIT ASSEMBLY
SPACER
WASHER
GROMMET
BUSHING
WASHER
PACKING
SNAP PIN
SPACER PLATE
x4
● Non-reusable part
Multemp D
AT-07497

AT

Removal

1. Removal of console box ASSY
   (Refer to IT - 33)
2. Removal of under cover front AL (refer to IE - 39)
3. Removal of under cover COMPL T/M (refer to IE - 40)
4. Disconnection of floor shift gear shifting rod SUB-ASSY No.1

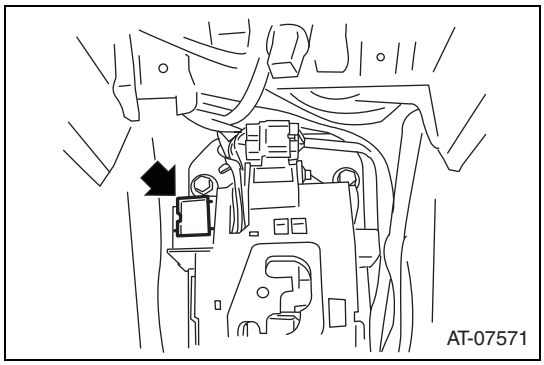

(1) While pressing the shift lock release button, set the select lever to N position.

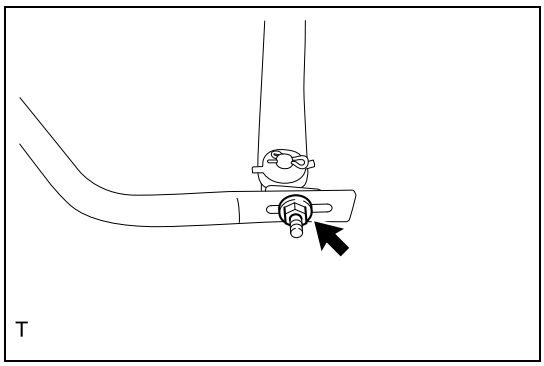

(2) Remove the nut and disconnect the floor shift gear shifting rod SUB-ASSY No.1 from the connecting rod swivel.

5. Removal of select lever ASSY
   (1) Disconnect the connector.

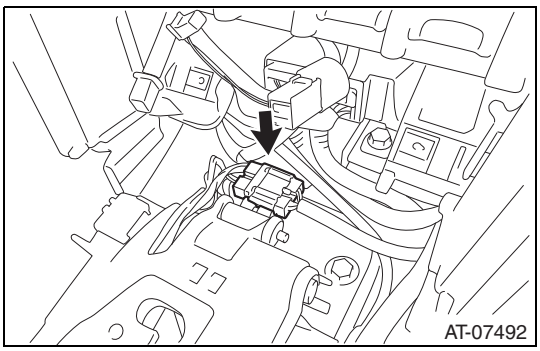

(2) Release the wiring harness clamp, and disconnect the wiring harness.

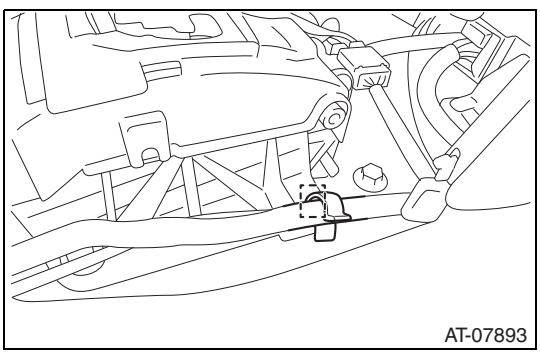

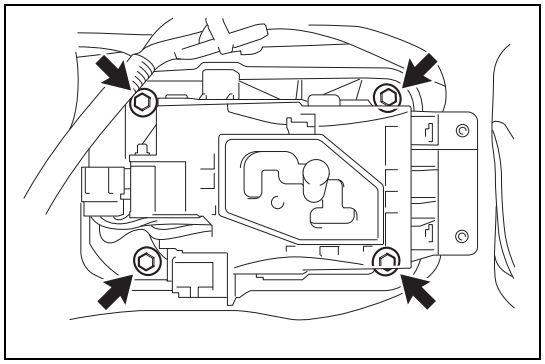

(3) Remove 4 bolts to remove the select lever ASSY.

Disassembly

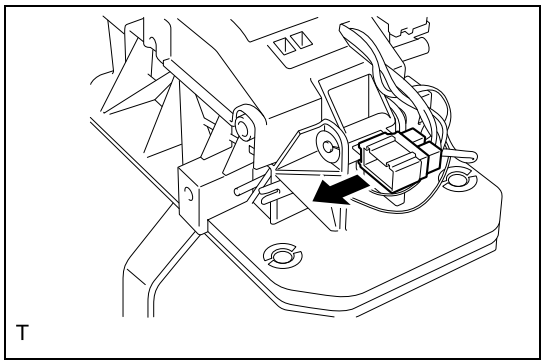

1. Removal of guide plate
   (1) Use a flat tip screwdriver to release the claws, and disconnect the connector.

AT

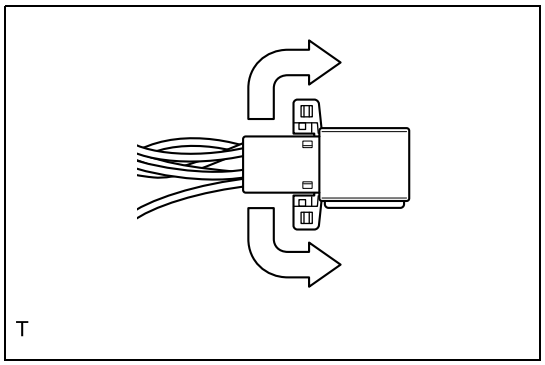

(2) Use a precision screwdriver (flat tip) to release the connector lock.

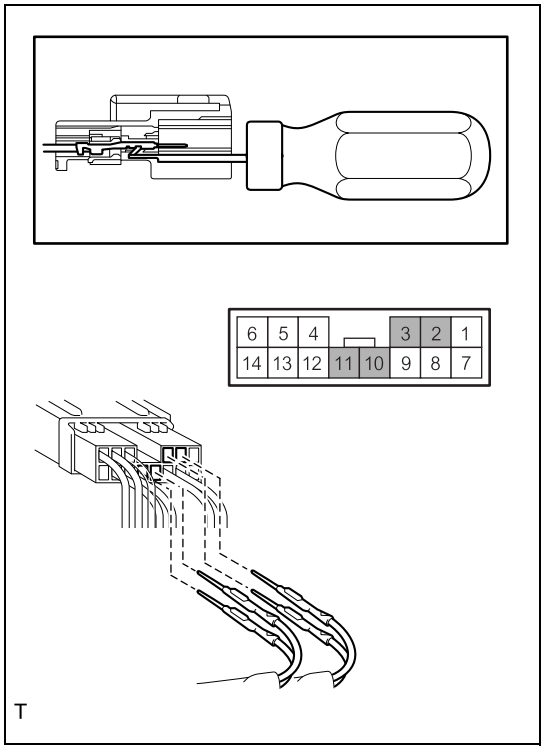

(3) Use a precision screwdriver (flat tip) to pull out the connectors No.2 and No.3 of the shift lock solenoid connector and the connectors No.10 and No.11 of the manual mode switch connector.

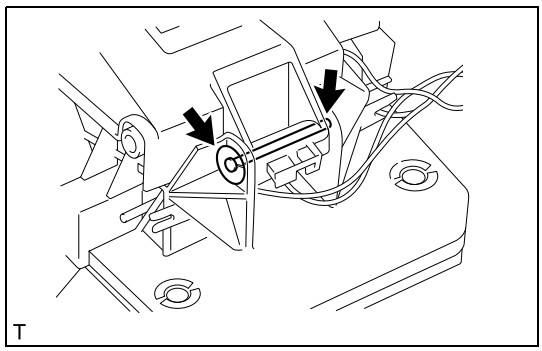

(4) Remove the clamp push nut and the shaft guide pin.

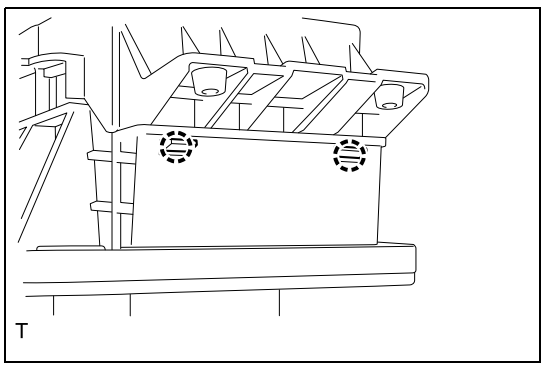

(5) Release the 2 claws to remove the guide plate from the base plate.

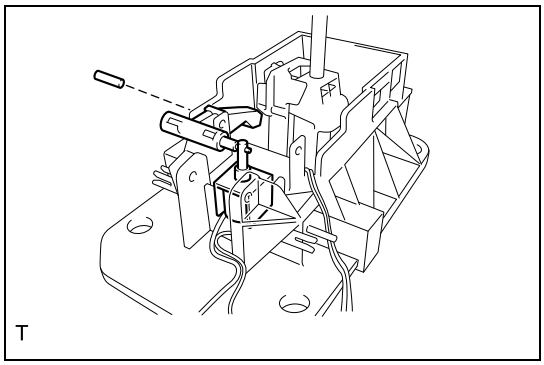

2. Removal of solenoid unit
   (1) Pull out the pin and remove the solenoid unit together with the shift lock release arm as a unit.
   (2) Remove the shift lock release arm from the solenoid unit.

AT

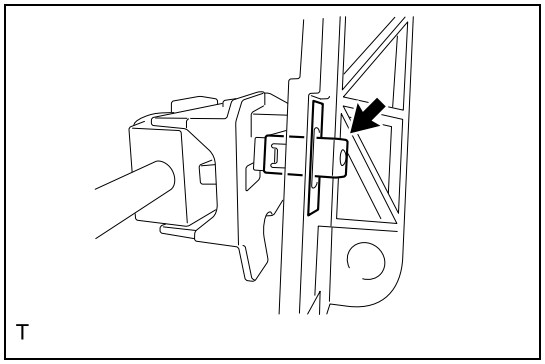
T

3. Removal of D rod
   (1) Remove the D lock clamp.
   (2) Remove the D lock spring and the D rod.
   (3) Remove the cushion D lock from the D rod.
   (4) Remove the bushing D lock.

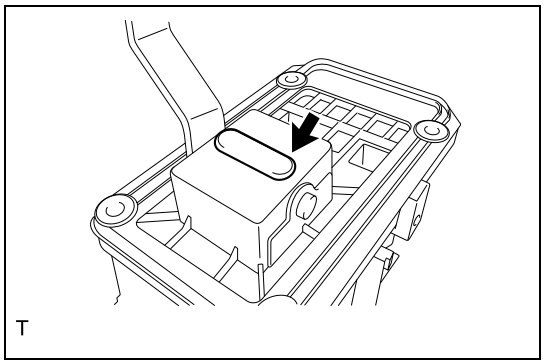
T

4. Removal of grommet
   (1) Remove the grommet from the base plate.

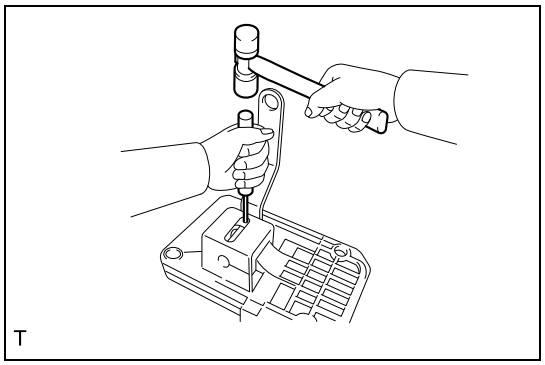
T

5. Removal of arm COMPL
   (1) Use a pin punch 3 and hammer to drive out a pin.

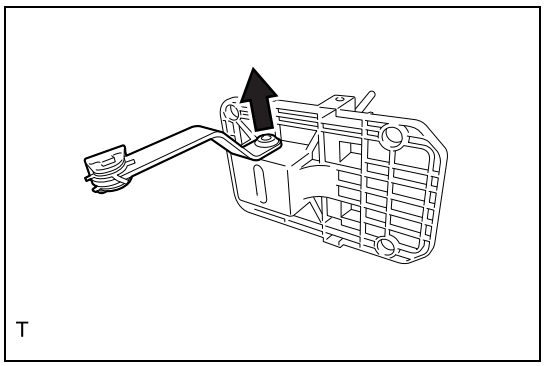
T

   (2) Pull out the arm COMPL from the base plate.

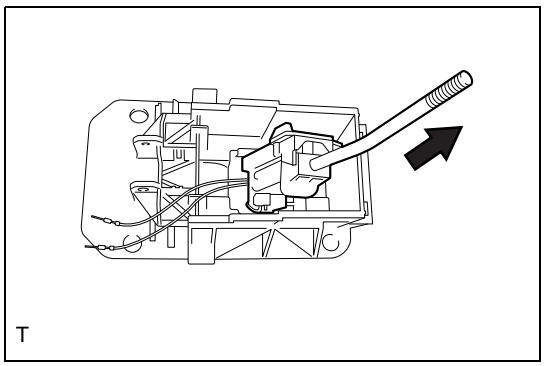
T

6. Removal of select lever COMPL
   (1) Remove the select lever COMPL together with the select arm bracket as a single unit.

AT

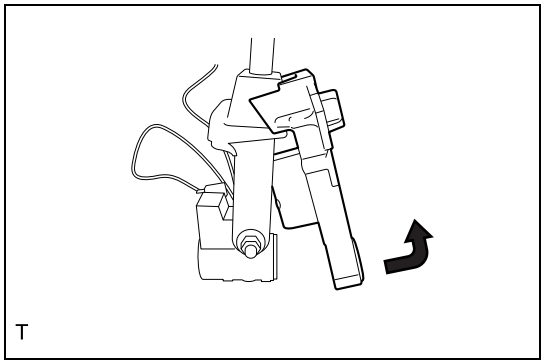
T

7. Removal of select lever arm bracket
   (1) Remove the select lever COMPL from the select arm bracket.

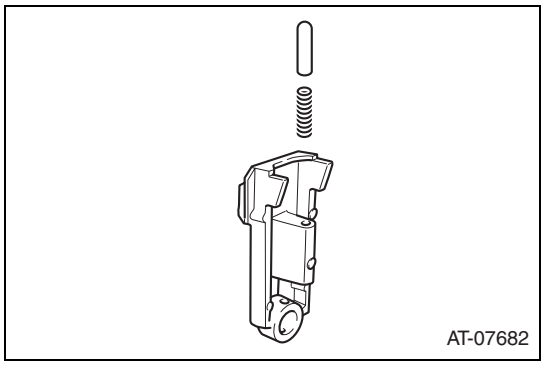

   (2) Remove the rod and the spring from the select arm bracket.

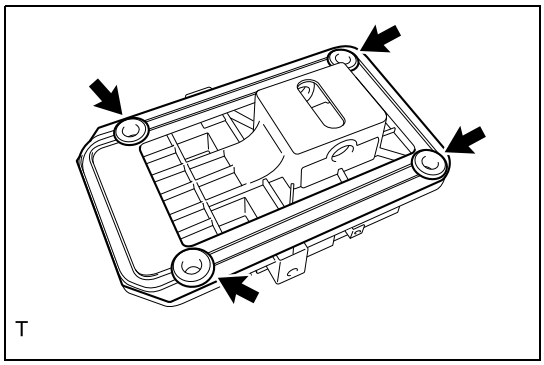
T

8. Removal of gasket
   (1) Remove 4 spacer plates to remove the gasket.

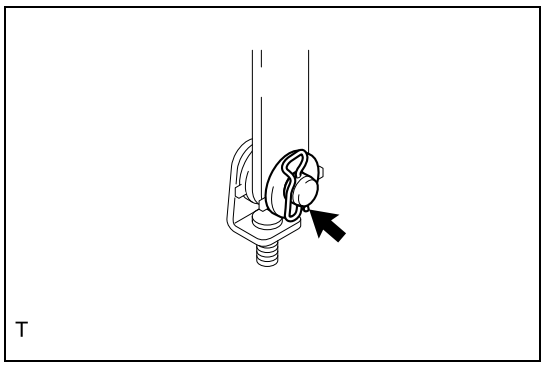
T

9. Removal of swivel
   (1) Remove the snap pin, then remove the 2 washers, bushing, spacer, and swivel.

AT

Assembly

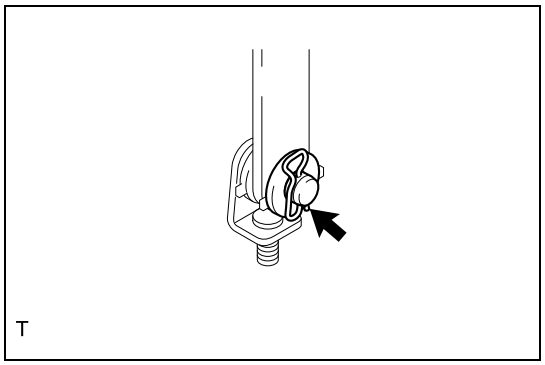

1. Installation of swivel
   (1) Install the 2 washers, spacer, bushing, and swivel with a snap pin.

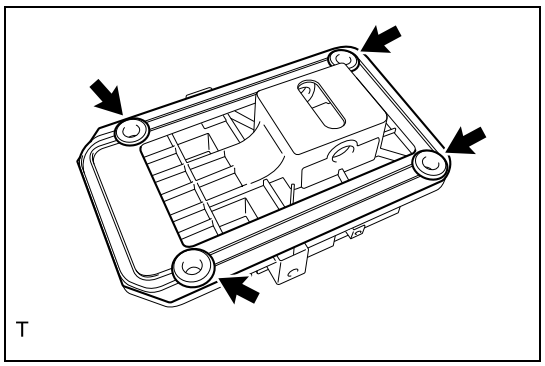

2. Installation of gasket
   (1) Install 4 spacer plates and the gasket.

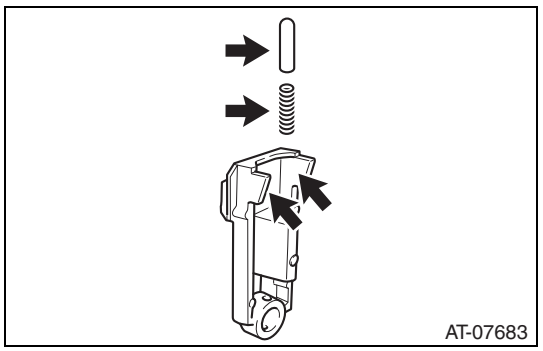

3. Installation of select arm bracket
   (1) Apply Multemp D to the spring and the rod.
   (2) Install the spring and the rod to the select arm bracket.

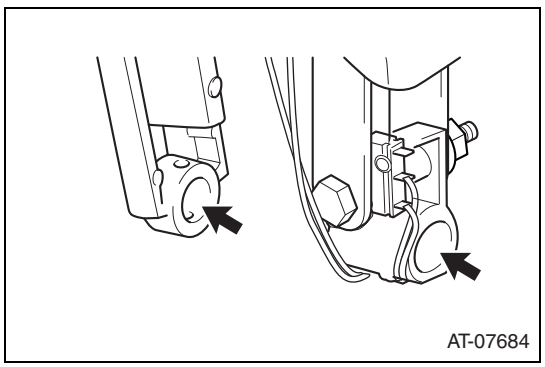

   (3) Apply Multemp D to the select lever COMPL and the select arm bracket.

AT

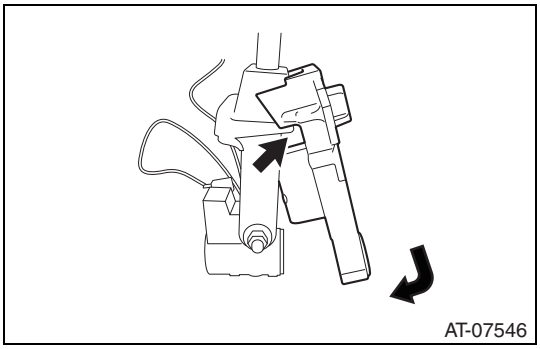

(4) Apply Multemp D to the sliding surface of the rod and install the select arm bracket to the select lever COMPL.

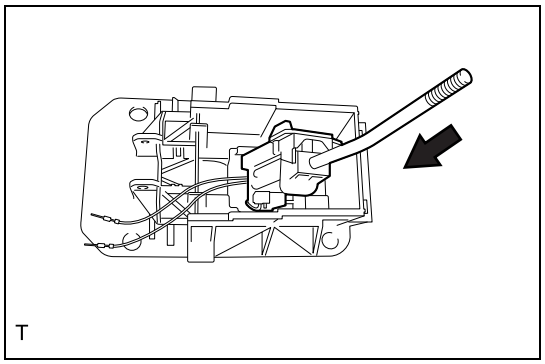

4. Installation of select lever COMPL
   (1) Set the select arm bracket together with the select lever COMPL as a single unit to the base plate.

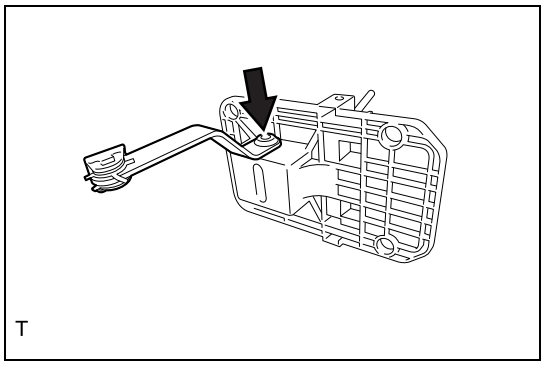

5. Installation of arm COMPL
   (1) Insert the arm COMPL to the base plate.

AT

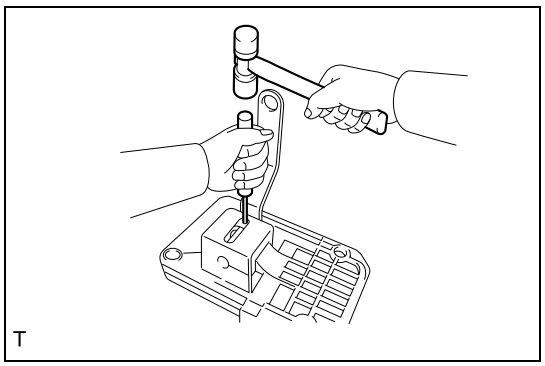

(2) Use a pin punch 3 and hammer to drive in a new pin.

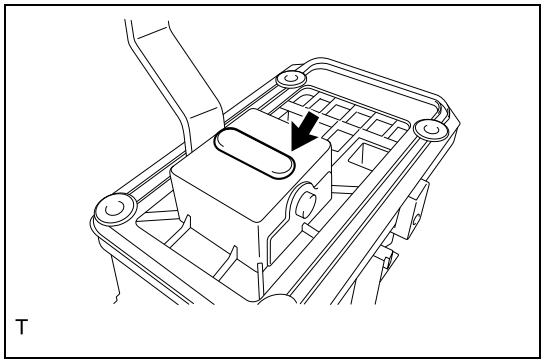

6. Installation of grommet
   (1) Install the grommet.

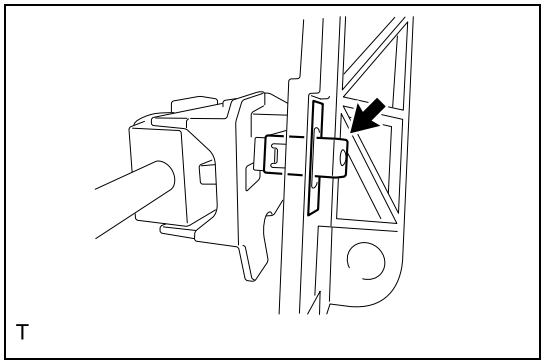

7. Installation of D rod
   (1) Install the bushing D lock.
   (2) Install the cushion detent lock to the D rod.
   (3) Apply Multemp D to the D lock spring and the D rod.
   (4) Install the D lock spring and the D rod.
   (5) Install the D lock clamp.

8. Installation of solenoid unit
   (1) Apply Multemp D to the solenoid unit and the pin.

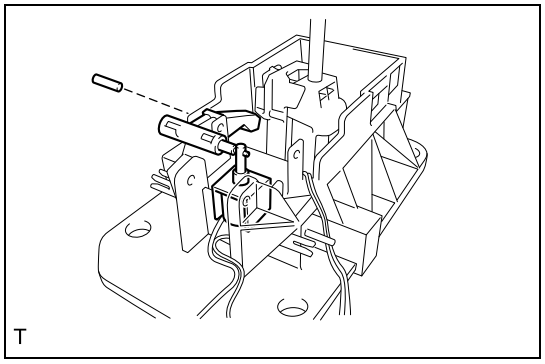

   (2) Set the solenoid unit together with the shift lock release arm as a unit to the base plate and insert the pin.

AT

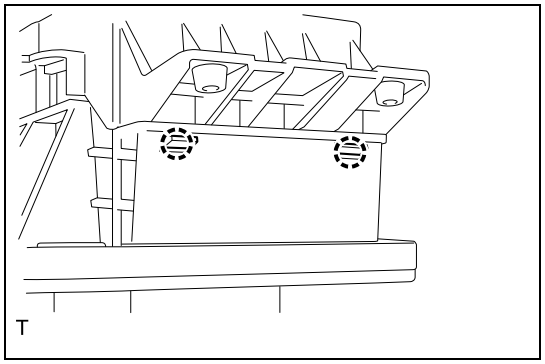

9. Installation of guide plate
   (1) Engage the 2 claws and install the guide plate to the base plate.

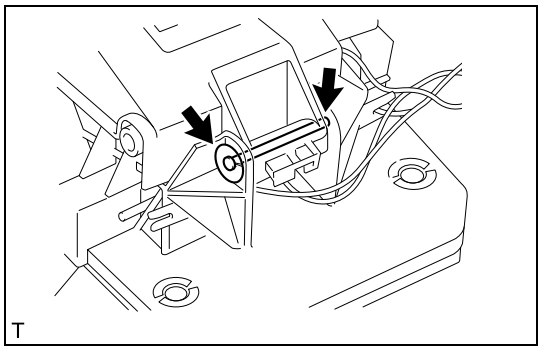

   (2) Install the shaft guide pin and a new clamp push nut.

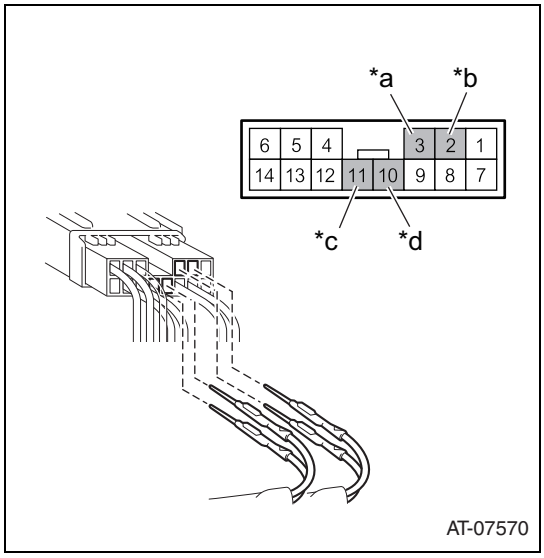

(3) Connect the connectors No.2 and No.3 of the shift lock solenoid connector and the connectors No.10 and No.11 of the manual mode switch connector.

Captions in illustration

*a	Blue
*b	Black
*c	White or black
*d	Black or white

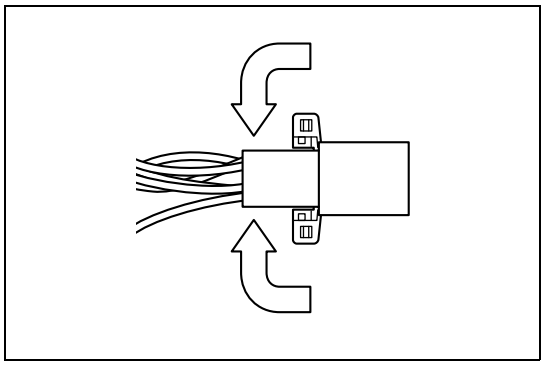

(4) Lock the terminal of the harness connector.

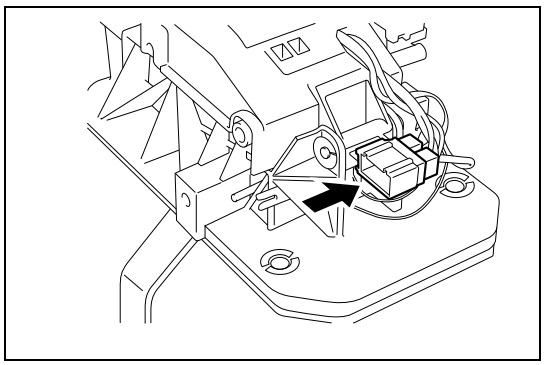

(5) Engage the claw and install the connector.

Installation

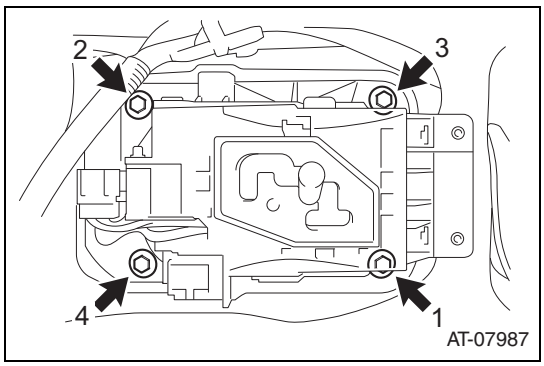

1. Installation of select lever ASSY
   (1) Temporarily install the select lever ASSY with 4 bolts.
   CAUTION:
   Keep the wiring harness from being caught in.
   (2) Tighten 4 bolts to the specified torque in the order shown in the figure.
   Standard value:T=18N·m {184kgf·cm} {13.3ft·lbf}
   (3) Install the wiring harness clamp to the select lever ASSY.
   (4) Connect the connector.
   (5) Set the select lever to N position.

AT

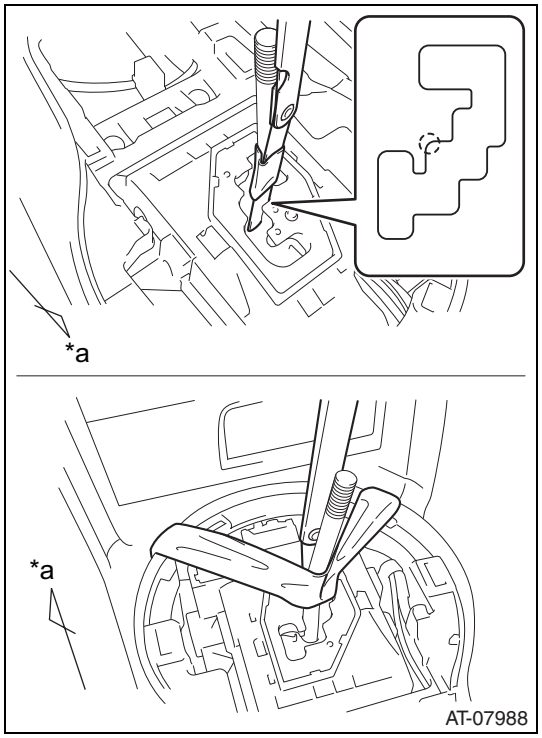

(6) Insert a 0.3 mm thickness gauge between the select lever and the guide plate, and secure it with tape, etc.
CAUTION:
Keep the thickness gauge from entering the portion (arc) shown in the figure.

Captions in illustration

*a	Front side of vehicle

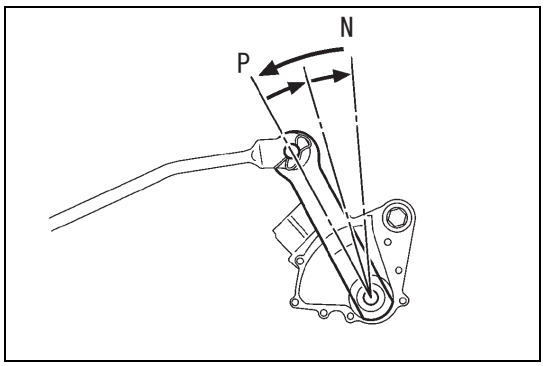

2. Connection of floor shift gear shifting rod SUB-ASSY No.1
   (1) Pull the floor shift gear shifting rod SUB-ASSY No.1 toward the rear of the vehicle until it stops, then put it back 2 steps (to N position).
   (2) Temporarily install the floor shift gear shifting rod SUB-ASSY No.1 with a nut while seating it on the flat surface of the swivel.
   CAUTION:
   Be sure to seat it by hand and temporarily tighten the nut.

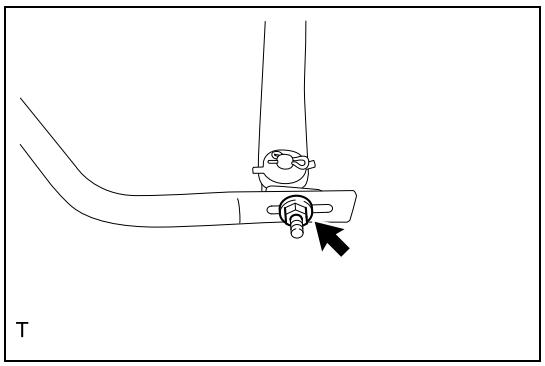

   (3) Tighten the nut with the arm COMPL lightly pressed toward the rear of the vehicle.
   Standard value:T=18N·m {184kgf·cm} {13ft·lbf}
   CAUTION:
   - Do not press the arm COMPL excessively.
   - Check that the floor shift gear shifting rod SUB-ASSY No.1 remains seated on the flat surface of the swivel.

3. Installation of console box ASSY
   (Refer to IT - 38)
4. Installation of under cover COMPL T/M (refer to IE - 46)
5. Installation of under cover front AL (refer to IE - 46)
6. Check of select lever position (refer to AT - 210)

Adjustment

1. Removal of under cover COMPL T/M (refer to IE - 40)
2. Removal of under cover front AL (refer to IE - 39)

3. Adjustment of select lever position
   (1) Set the select lever to N position.

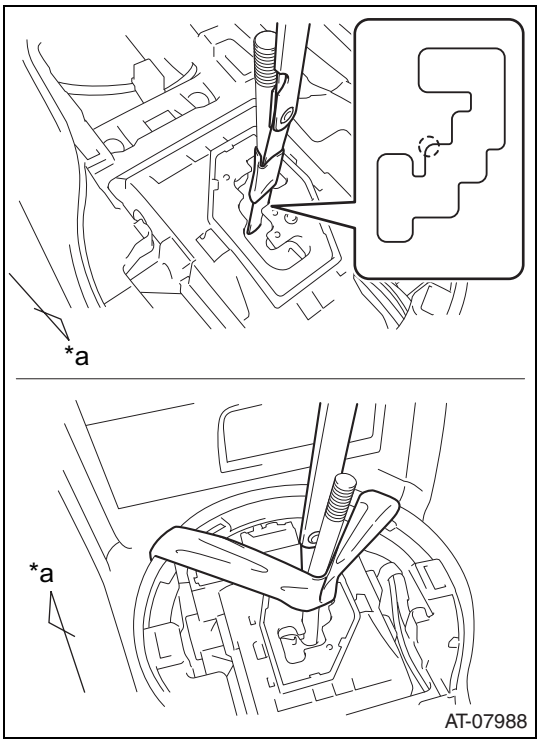

   (2) Insert a 0.3 mm thickness gauge between the select lever and the guide plate, and secure it with tape, etc.
   CAUTION:
   Keep the thickness gauge from entering the portion (arc) shown in the figure.

Captions in illustration

*a	Front side of vehicle

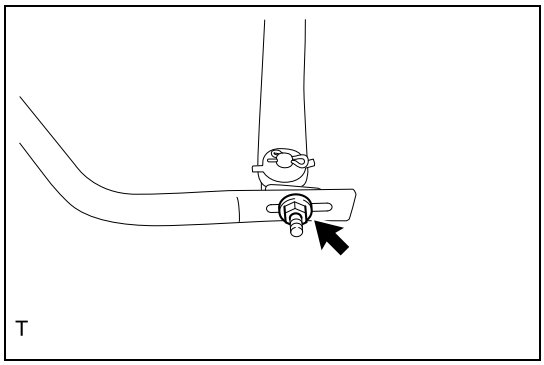

   (3) Remove the nut and disconnect the floor shift gear shifting rod SUB-ASSY No.1 from the swivel.

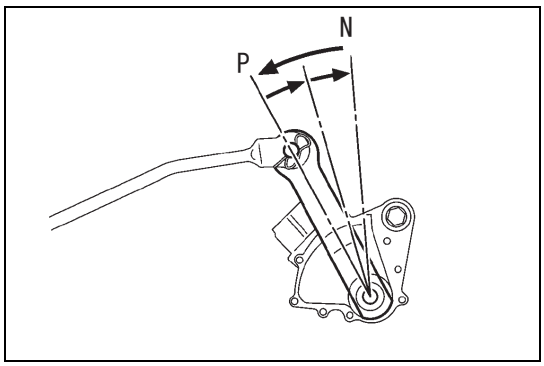

   (4) Pull the floor shift gear shifting rod SUB-ASSY No.1 toward the rear of the vehicle until it stops, then put it back 2 steps (to N position).

   (5) Temporarily install the floor shift gear shifting rod SUB-ASSY No.1 with a nut while seating it on the flat surface of the swivel.
   CAUTION:
   Be sure to seat it by hand and temporarily tighten the nut.

AT

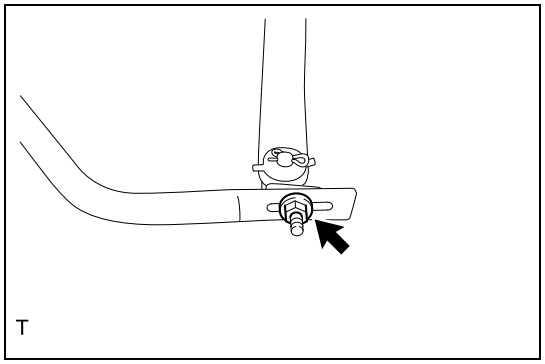

(6) Tighten the nut with the arm COMPL lever lightly pressed toward the rear of the vehicle.
Standard value:T=18N·m {184kgf·cm} {13ft·lbf}
CAUTION:
- Do not press the arm COMPL excessively.
- Check that the floor shift gear shifting rod SUB-ASSY No.1 remains seated on the flat surface of the swivel.

(7) After the adjustment, check the operability and behavior.

4. Select lever position check
   (1) Depress the brake pedal with IG ON.
   (2) Shift the select lever to each position. At this time, check that the select lever moves smoothly to each position without interference, and that the position indicator displays correctly.
   (3) Start the engine, and check that the vehicle moves forward when shifted from N to D position and backward when shifted to R position.
5. Installation of under cover COMPL T/M (refer to IE - 46)
6. Installation of under cover front AL (refer to IE - 46)

On-vehicle inspection

1. Select lever position check
   (1) Shift the select lever to each position. At this time, check that the select lever moves smoothly to each position without interference, and that the position indicator displays correctly.
   (2) Check that the select lever does not stop while shifting from R to P position and does not get caught during select operation from D to M position.
   NOTE:
   Perform with the parking brake released and the parking cam applied.
   (3) Start the engine, and check that the vehicle moves forward when shifted from N to D position and backward when shifted to R position.
2. Check of shift lock device operation
   (1) Shift the select lever to the P position.
   (2) Turn the ignition switch to OFF.
   (3) Check that the select lever cannot be shifted to positions other than P when it is operated.
   (4) Check that the shift lever can be shifted to ranges other than P position with IG ON and the brake pedal depressed.
3. Check of shift lock release button operation
   (1) Remove the button cover.

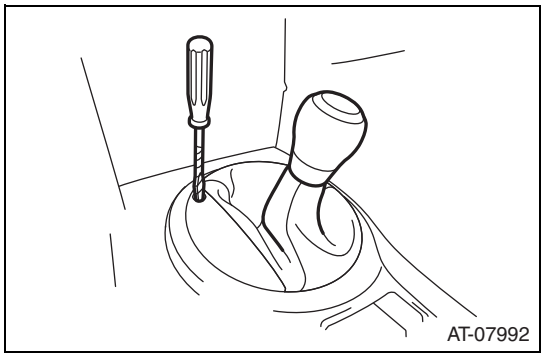

(2) Use a driver or other tool to check that the select lever can be shifted to ranges other than P position when it is operated with the shift lock release button pressed.

AT

Unit inspection

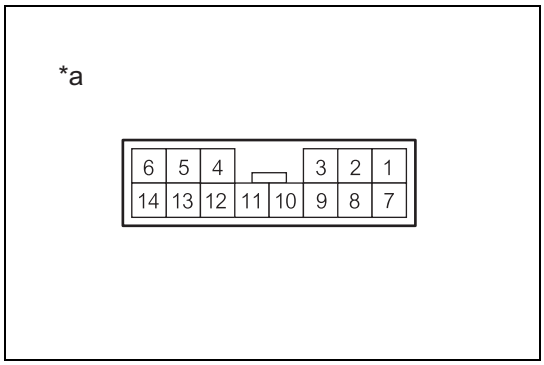

1. Check of select lever ASSY
   (1) Measure the resistance between the terminals.

Resistance

Inspection terminals	Inspection conditions (shift position)	Standard value
1 - 3	Select lever in any other than P position	Less than 1 Ω
2 - 3	Select lever in P position	
8 - 9	When select lever is in M position and shifted to "+"	
10 - 11	Select lever in M position	
12 - 13	When select lever is in M position and shifted to "-"	
1 - 3	Select lever in P position	10 k Ωor more
2 - 3	Select lever in any other than P position	
8 - 9	Except when select lever is in M position and shifted to "+"	
10 - 11	Select lever in any other than M position	
12 - 13	Except when select lever is in M position and shifted to "-"	

Captions in illustration

*a	Connector not connected (Select lever ASSY)

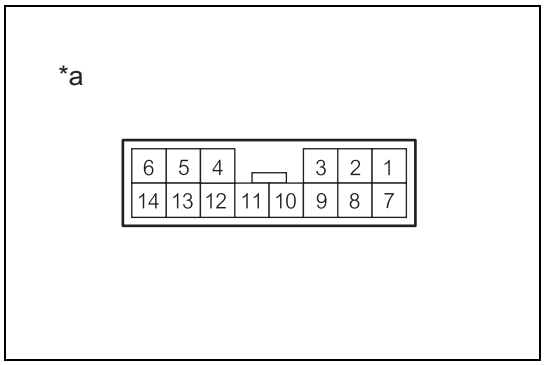

2. Check of shift lock solenoid ASSY
   (1) Measure the resistance between the terminals.

Resistance

Inspection terminals	Inspection conditions	Standard value
4 - 5	20°C	27.6 to 30.5 Ω

Captions in illustration

*a	Connector not connected (Select lever ASSY)

AT

Transmission shift switch

Exploded view

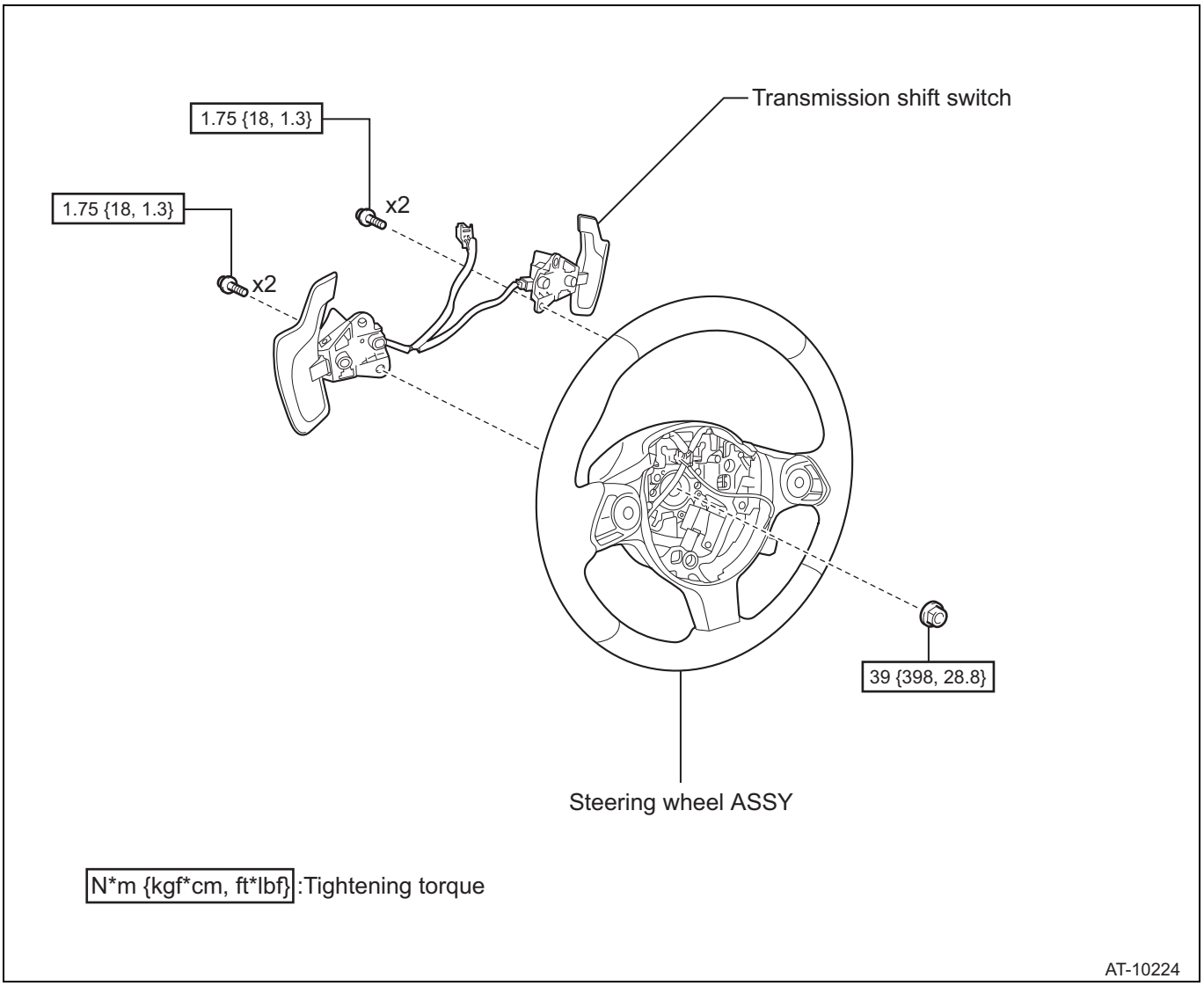

AT

Removal

1. Removal of horn button ASSY
   (Refer to RS - 246)
2. Removal of steering wheel ASSY (refer to SR - 68)
3. Removal of transmission shift switch
   (1) Disconnect the connector clamps from the steering wheel ASSY.

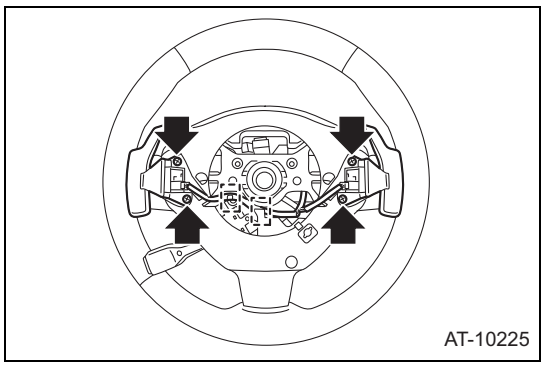

(2) Remove 4 screws to remove the transmission shift switch from the steering wheel ASSY.

Installation

1. Installation of transmission shift switch
   (1) Install the transmission shift switch to the steering wheel ASSY with 4 screws.
   Standard value:T=1.75N·m {18kgf·cm} {1.3ft·lbf}
   (2) Install the connector clamp to the steering wheel ASSY.
2. Installation of steering wheel ASSY (refer to SR - 69)
3. Installation of horn button ASSY
   (Refer to RS - 248)

Unit inspection

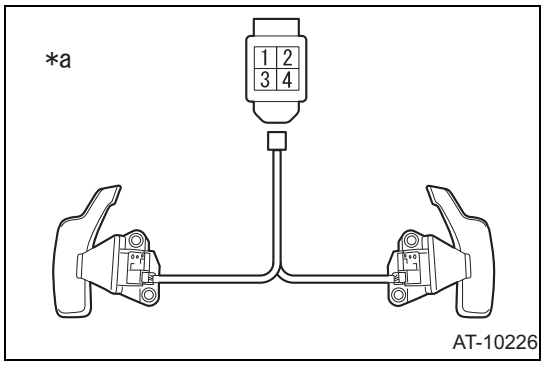

1. Check of transmission shift switch
   (1) Resistance inspection
   (a)Measure the resistance between the terminals.
   Resistance

Inspection terminals	Inspection conditions	Standard value
3 - 4	Pull the shift switch lever RH (+) side.	Less than 10 Ω
	Release the shift switch lever.	1 MΩ or more
1 - 4	Pull the shift switch lever LH (-) side.	Less than 10 Ω
	Release the shift switch lever.	1 MΩ or more

Captions in illustration

*a	Connector not connected (Transmission shift switch)

AT

Pattern select switch ASSY

Exploded view

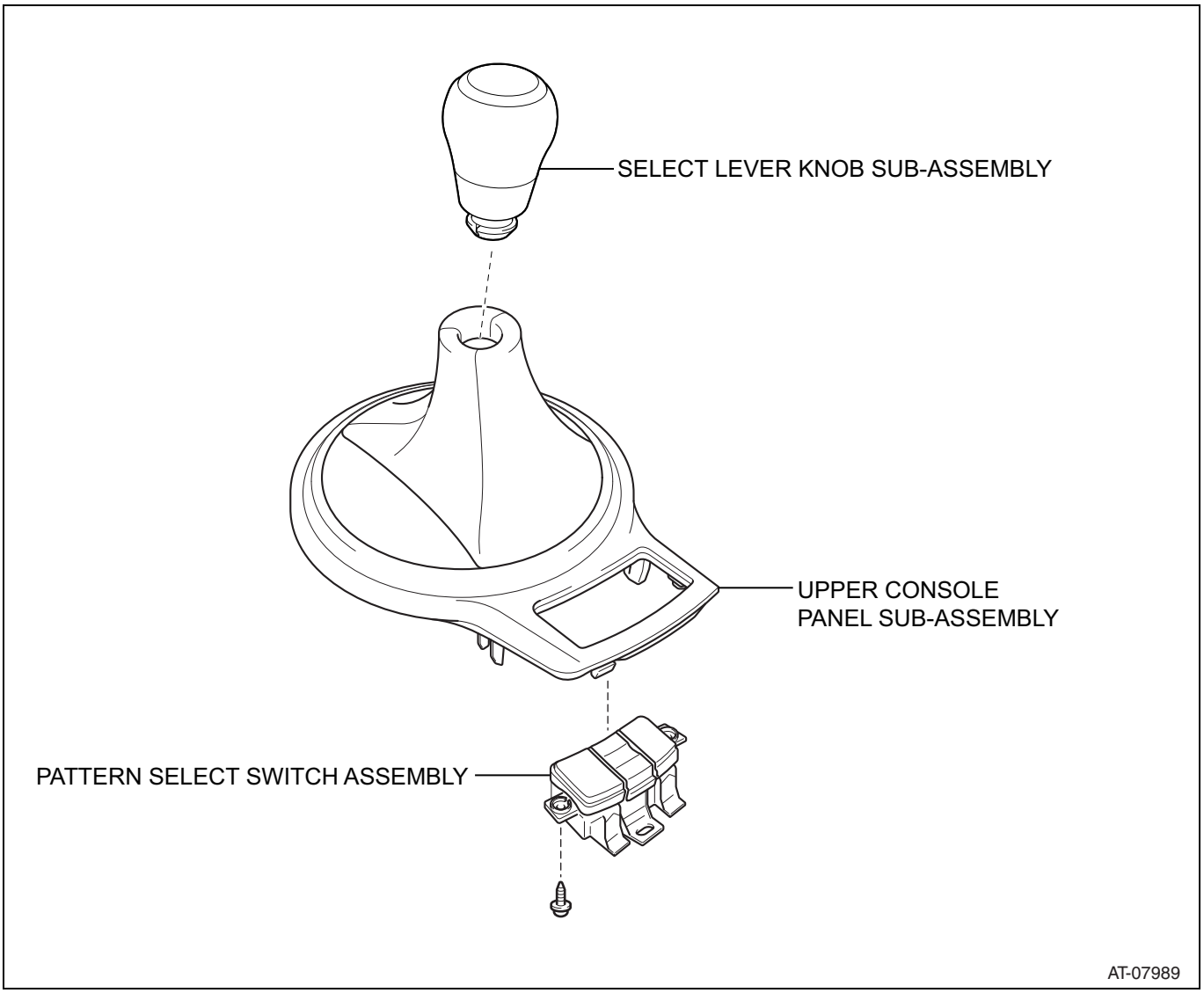

AT

Removal

1. Removal of select lever knob (refer to IT - 35)
2. Removal of console panel SUB-ASSY UPR (refer to IT - 35)

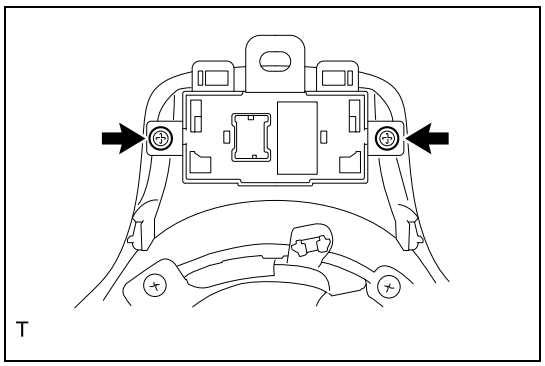

3. Removal of pattern select switch ASSY
   (1) Remove 2 screws to remove the pattern select switch ASSY.

Installation

1. Installation of pattern select switch ASSY
   (1) Install the pattern select switch ASSY with 2 screws.

2. Installation of console panel SUB-ASSY UPR (refer to IT - 39)
3. Installation of select lever knob (refer to IT - 39)

Unit inspection

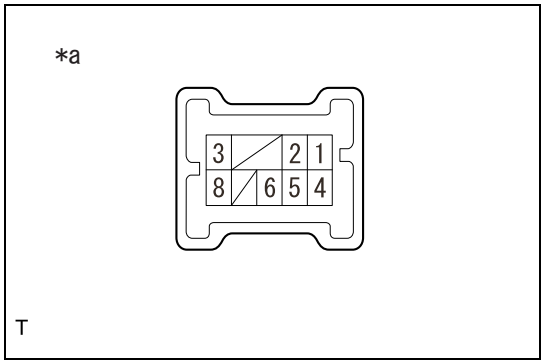

1. Check of pattern select switch ASSY
   (1) Measure the resistance between the terminals.

Resistance

Inspection terminals	Inspection conditions	Standard value
4 - 8	Pattern select (SPORT) switch ON	Less than 1 Ω
4 - 8	Pattern select (SPORT) switch OFF	10 k Ωor more
6 - 8	Pattern select (SNOW) switch ON	Less than 1 Ω
6 - 8	Pattern select (SNOW) switch OFF	10 k Ωor more

Captions in illustration

*a	Connector not connected (Pattern select switch ASSY)

AT

Extension housing rear oil seal

Exploded view

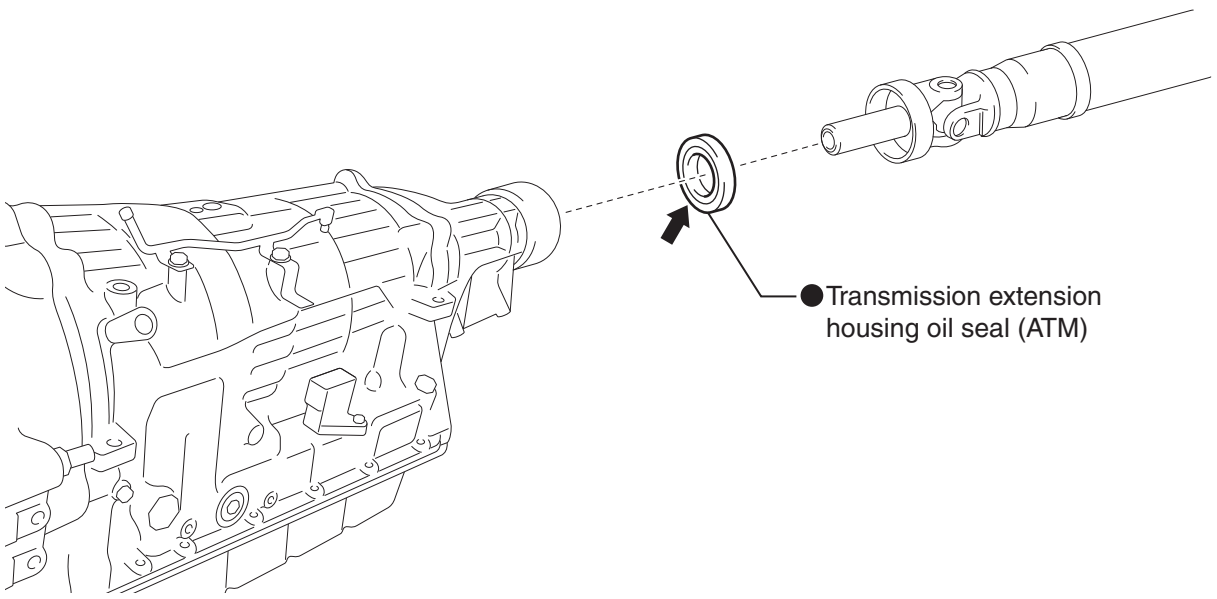

● Non-reusable parts

⬅ Auto fluid WS

AT-07283

Replacement

1. Removal of propeller shaft W/ center bearing ASSY
   (Refer to DP - 14)

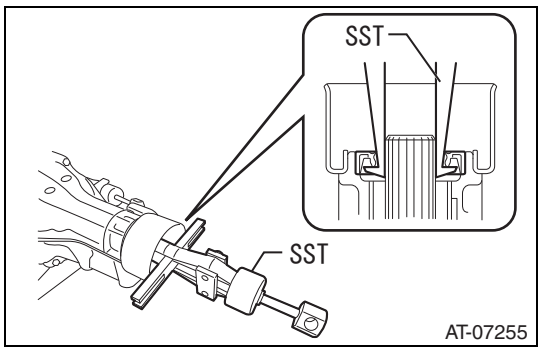

2. Removal of transmission extension housing oil seal (ATM).
   (1) Use SST to remove the transmission extension housing oil seal (ATM).
   SST 398527700

3. Installation of transmission extension housing oil seal (ATM)
   (1) Apply a small amount of auto fluid WS to the lip of a new transmission extension housing oil seal (ATM).

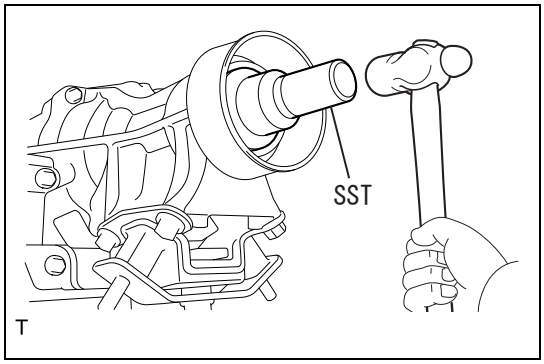

4. Installation of propeller shaft W/ center bearing ASSY (Refer to DP - 16)

(2) Use SST and a hammer to drive in the transmission extension housing oil seal (ATM) in the extension housing.
SST 09325-40010
Drive-in depth: 5.4 to 5.8 mm {0.213 to 0.228 in} (from end face of extension housing)
CAUTION:
- Keep the lip from foreign substances such as dirt.
- Be careful not to mistake the installing direction of the transmission extension housing oil seal (ATM).

Automatic transmission ASSY

Exploded view

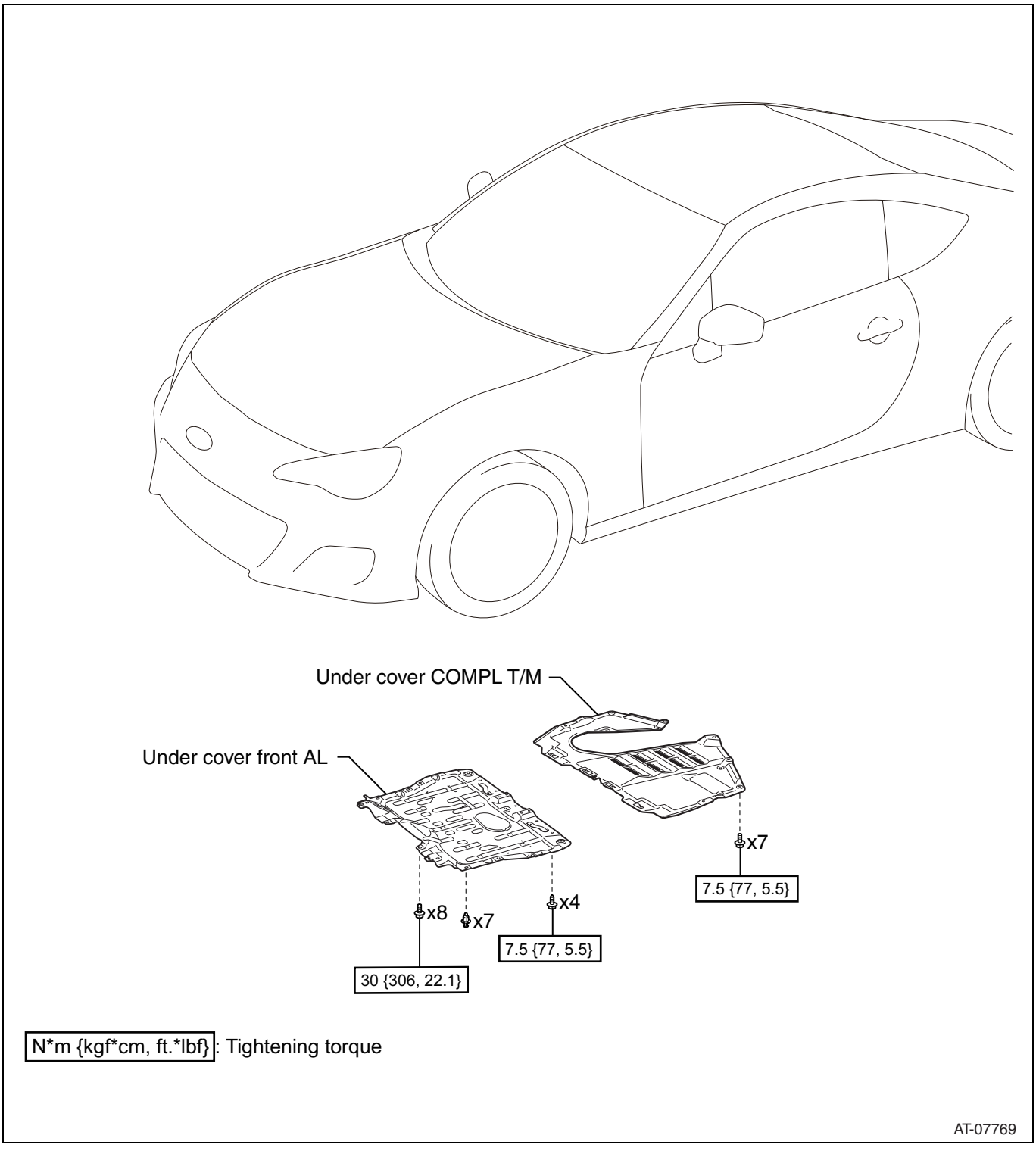

N*m {kgf*cm, ft.*lbf}: Tightening torque

AT-07769

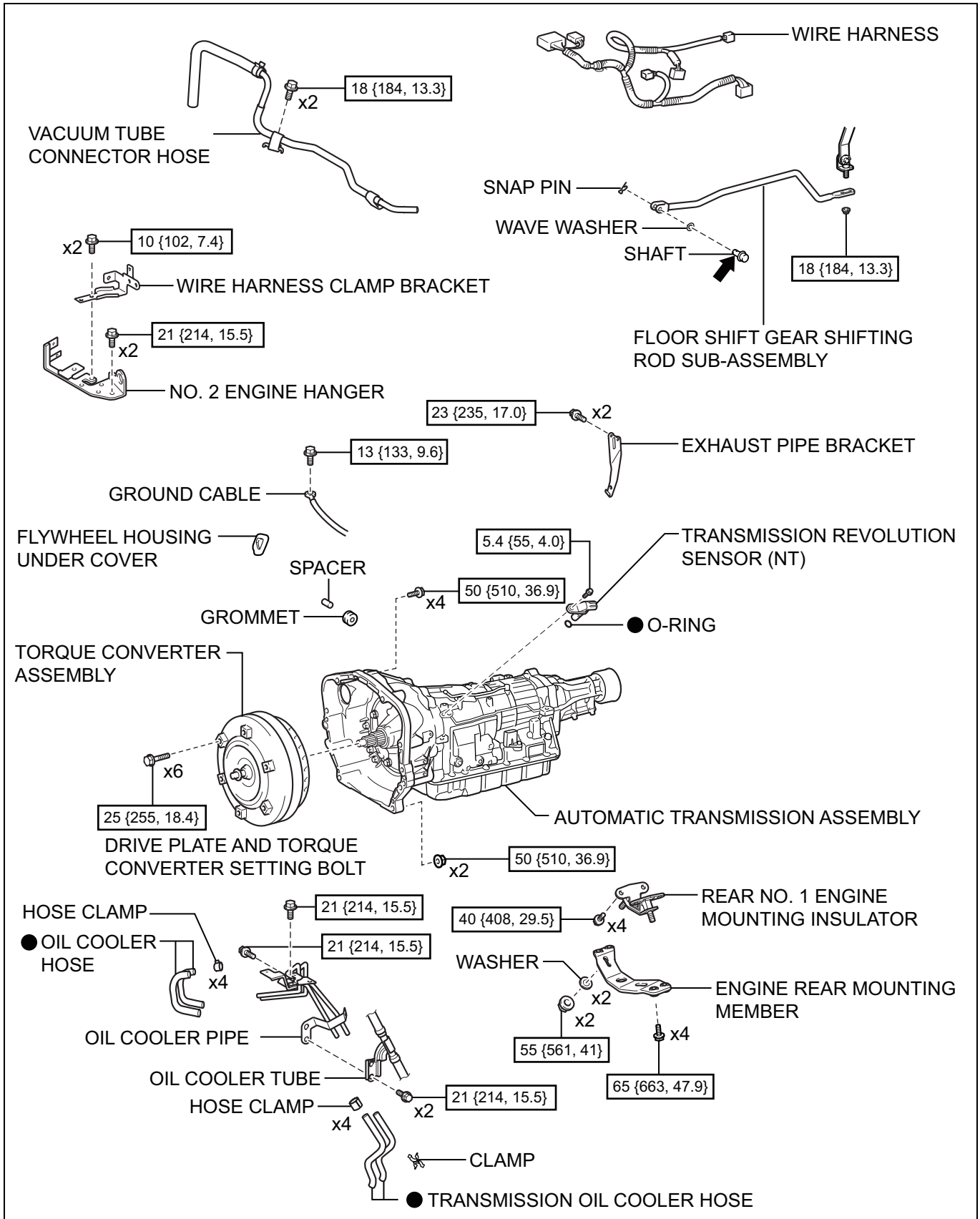
WIRE HARNESS
18 {184, 13.3}
x2
VACUUM TUBE
CONNECTOR HOSE
SNAP PIN
WAVE WASHER
SHAFT
18 {184, 13.3}
FLOOR SHIFT GEAR SHIFTING
ROD SUB-ASSEMBLY
x2
10 {102, 7.4}
WIRE HARNESS CLAMP BRACKET
21 {214, 15.5}
x2
NO. 2 ENGINE HANGER
23 {235, 17.0}
x2
EXHAUST PIPE BRACKET
13 {133, 9.6}
GROUND CABLE
FLYWHEEL HOUSING
UNDER COVER
5.4 {55, 4.0}
TRANSMISSION REVOLUTION
SENSOR (NT)
SPACER
GROMMET
50 {510, 36.9}
x4
O-RING
TORQUE CONVERTER
ASSEMBLY
x6
25 {255, 18.4}
DRIVE PLATE AND TORQUE
CONVERTER SETTING BOLT
AUTOMATIC TRANSMISSION ASSEMBLY
50 {510, 36.9}
x2
HOSE CLAMP
OIL COOLER
HOSE
x4
21 {214, 15.5}
21 {214, 15.5}
40 {408, 29.5}
x4
REAR NO. 1 ENGINE
MOUNTING INSULATOR
WASHER
x2
x2
ENGINE REAR MOUNTING
MEMBER
OIL COOLER PIPE
55 {561, 41}
x4
65 {663, 47.9}
OIL COOLER TUBE
21 {214, 15.5}
x2
HOSE CLAMP
x4
CLAMP
TRANSMISSION OIL COOLER HOSE
N*m {kgf*cm, ft.*lbf}: Specified torque
Non-reusable part
NIGTIGHT LYW No.2

AT-10009

Removal

1. Disconnection of the battery ground terminal (Refer to BH - 31)
2. Removal of under cover front AL (refer to IE - 39)
3. Removal of under cover COMPL T/M (refer to IE - 40)
4. Drainage of automatic transmission fluid (refer to AT - 161)
5. Removal of propeller shaft W/ center bearing ASSY
   (Refer to DP - 14)
6. Removal of stabilizer bar FR
   (Refer to FP - 21)
7. Removal of starter ASSY
   (Refer to ST - 21)
8. Disconnection of wiring harness
   NOTE:
   Secure the disconnected harnesses using tape, etc. to keep them out of the way.

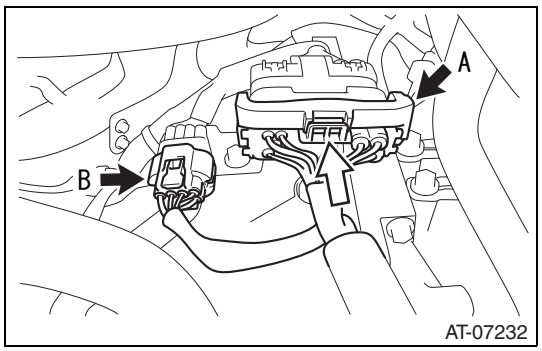

(1) Release the lock of the connector A to move the lock lever, and disconnect the connector.

Captions in illustration

⇨	Lock unit

(2) Disconnect the connector B.

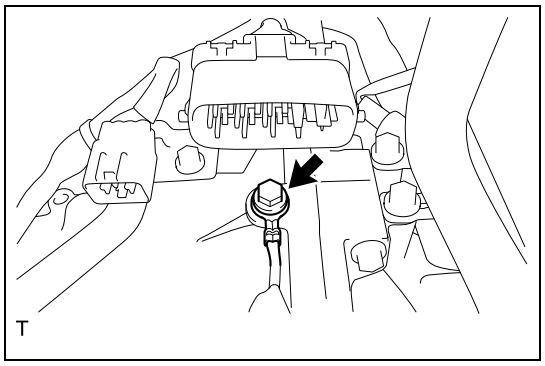

(3) Remove the bolts, then disconnect the ground wire.

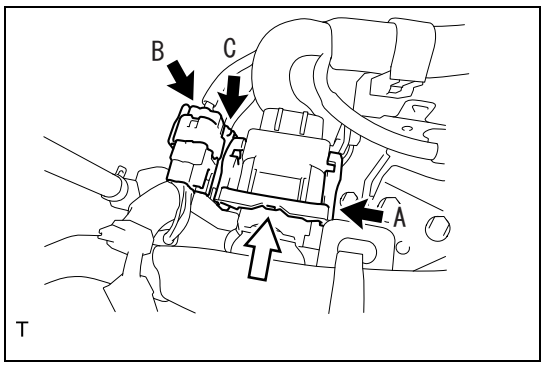

(4) Release the lock of the connector A to move the lock lever, and disconnect the connector.

Captions in illustration

⇨	Lock unit

(5) Disconnect the connector B and C.

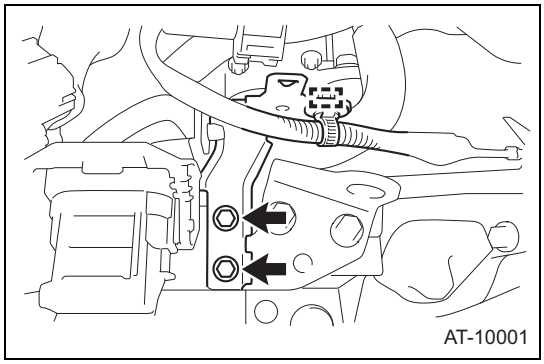

(6) Release the clamp and disconnect the wiring harness.

(7) Remove 2 bolts, and then remove the wiring harness clamp bracket.

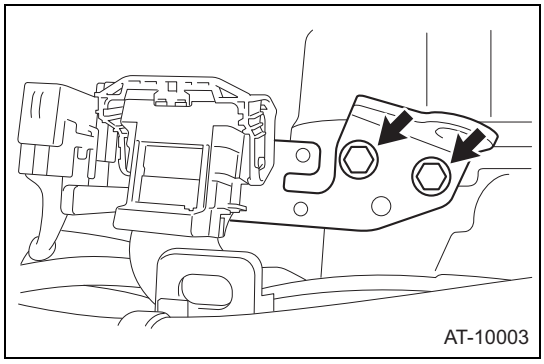

(8) Remove 2 bolts to disconnect the engine hanger No.2.

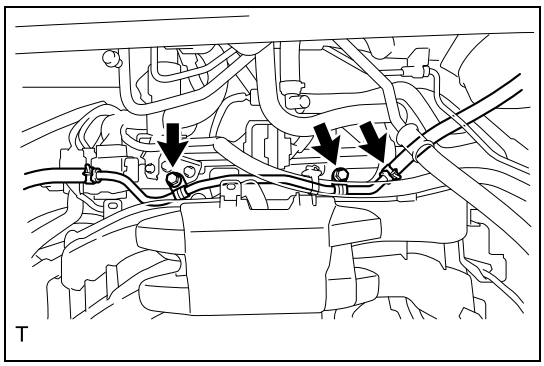

9. Disconnection of vacuum pipe
   (1) Remove 2 bolts to disconnect the vacuum pipe.

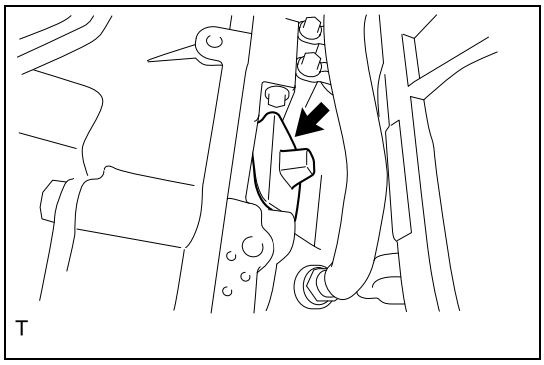

10. Removal of flywheel housing under cover
    (1) Remove the flywheel housing under cover.

AT

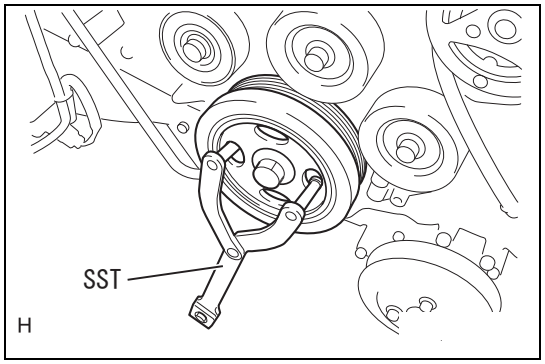

11. Removal of drive plate and torque converter setting bolt
    (1) Use the SST to lock the crankshaft pulley.
        SST 18355AA000, 18334AA000

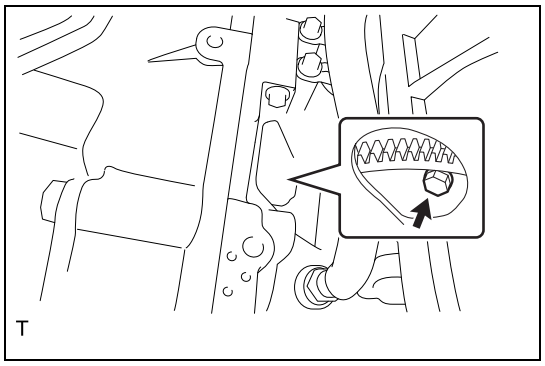

    (2) Remove the six drive plate & torque converter setting bolts through the service hole.

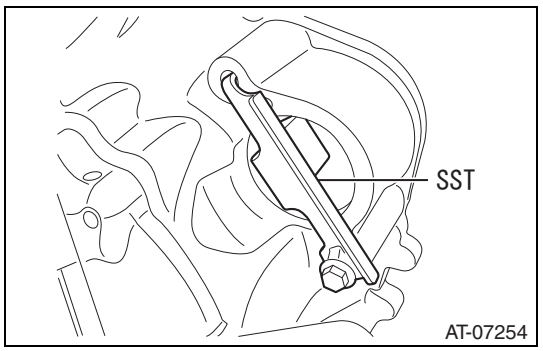

    (3) Install the SST to the converter case.
        SST 18750AA010

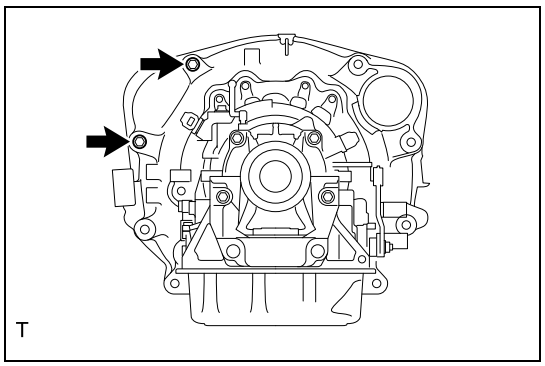

12. Disconnection of automatic transmission ASSY
    (1) Remove the 2 bolts connecting the automatic transmission ASSY.

13. Removal of exhaust pipe ASSY FR
    (Refer to IE - 35)

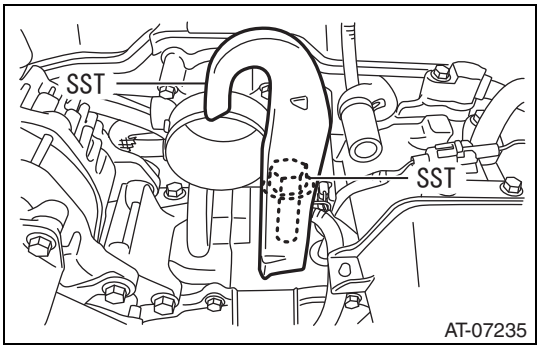

14. Engine ASSY support
    (1) Remove the air cleaner ASSY W/hose. (Refer to EM - 5)
    (2) Install the SST to the engine unit.
        SST 12281-38150, 90119-14120

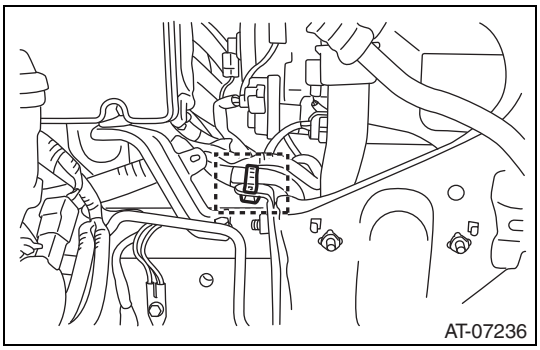

    (3) Disconnect the clip fixing the bulkhead harness to the vehicle.

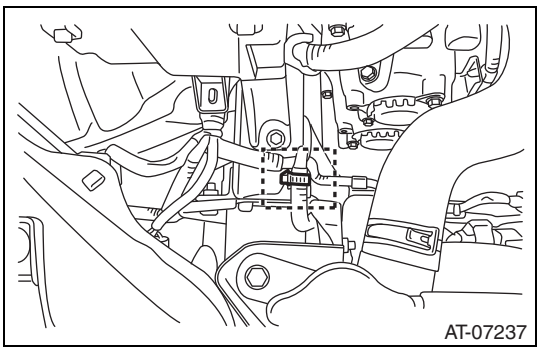

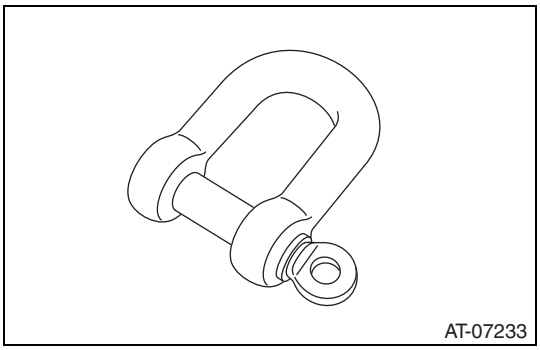

    (4) Install the SST to the engine and support the engine.
        SST 99099AJ000, 18679AA020
        CAUTION:
        - Keep the harness from being caught in when setting the SST on the vehicle.
        - Use a shackle with the load capacity of 250 kg or more.

AT

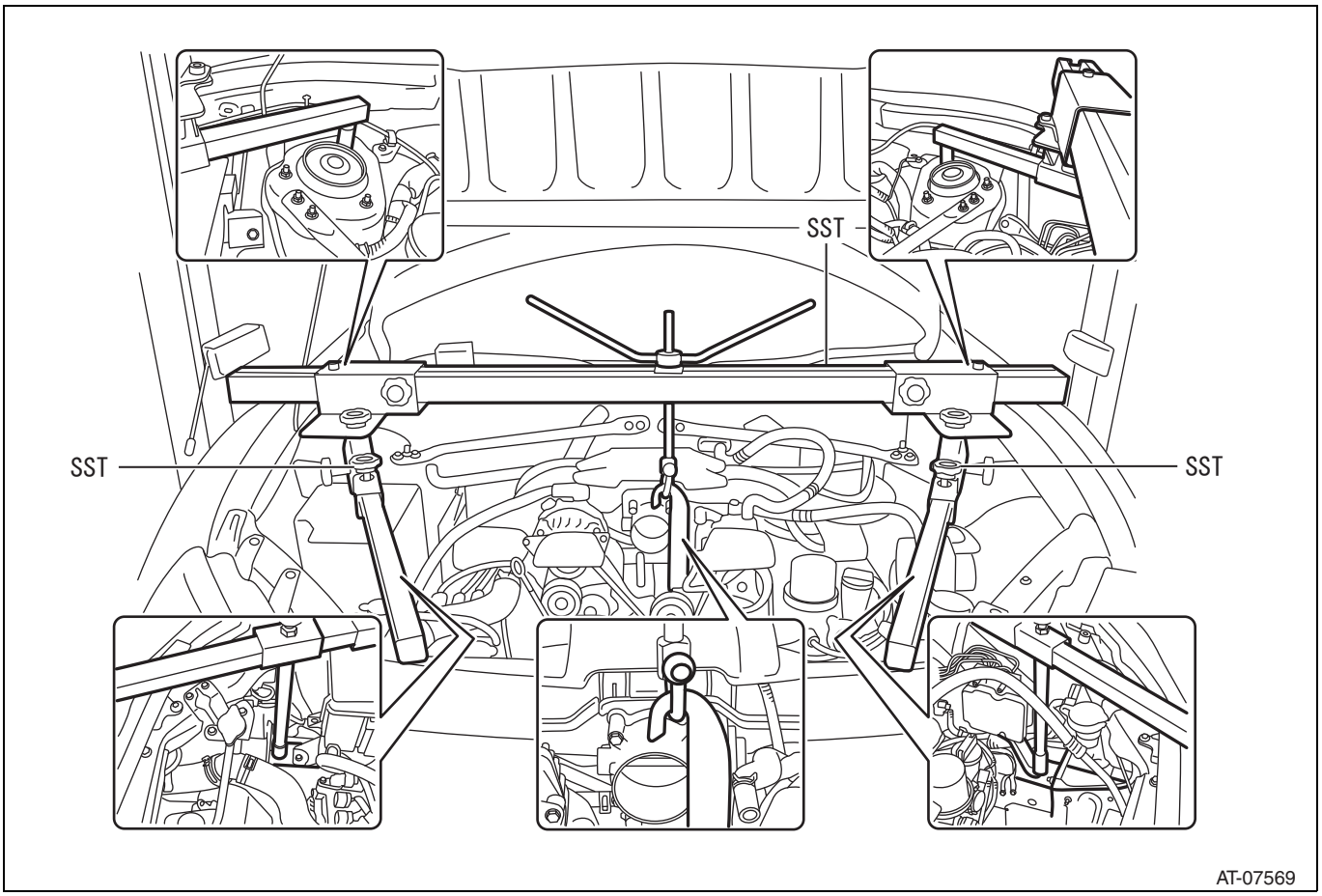

(5) Rotate the handle on the top of the SST to lift up the engine slightly.

15. Removal of transmission oil cooler hose
    (1) Move the 4 hose clamps and remove the 2 transmission oil cooler hoses.
    CAUTION:
    Have a container ready for catching fluid remaining in the oil cooler hose.

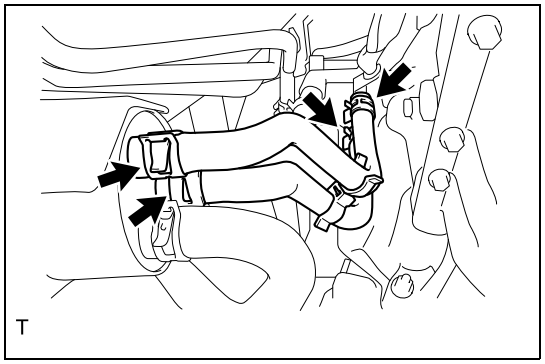

16. Disconnection of oil cooler tube
    (1) Remove 2 bolts to disconnect the oil cooler tube.

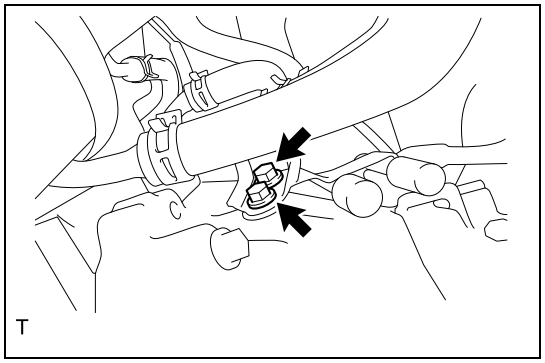

17. Removal of transmission revolution sensor (NT) (refer to AT - 169)

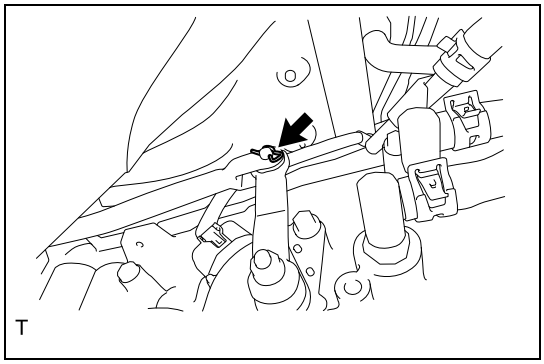

18. Removal of floor shift gear shifting rod SUB-ASSY No.1
    (1) Remove the snap pin and the shaft, and disconnect the floor shift gear shifting rod SUB-ASSY No.1 from the control shaft lever RH.

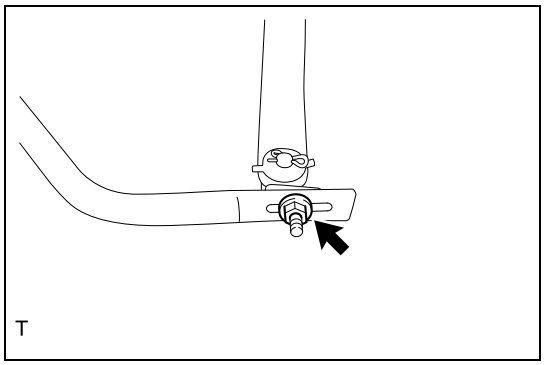

    (2) Remove the nut and remove the floor shift gear shifting rod SUB-ASSY No.1 from the swivel.
    (3) Remove the grommet and spacer from the control shaft lever RH.

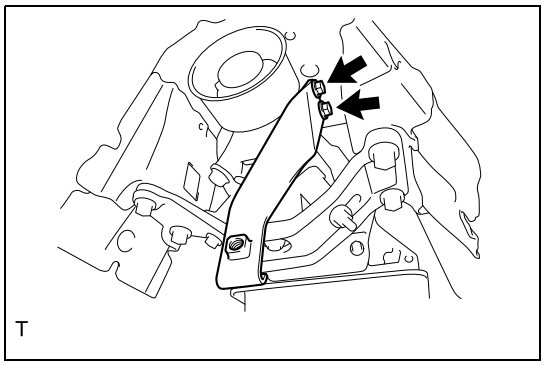

19. Removal of exhaust pipe bracket
    (1) Remove 2 bolts to remove the exhaust pipe bracket from the automatic transmission ASSY.

AT

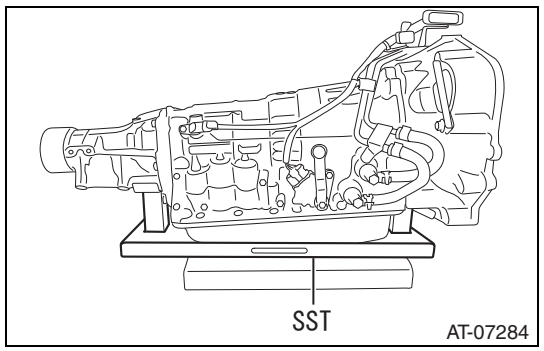

20. Automatic transmission ASSY support
    (1) Use the SST to support the automatic transmission ASSY.
    SST 18632AA010

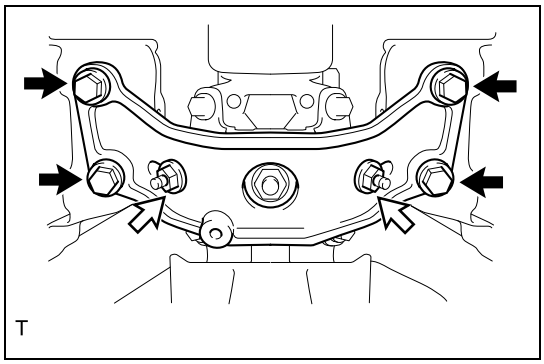

21. Removal of engine rear mounting member
    (1) Remove 4 bolts, 2 washers, and 2 nuts to remove the engine rear mounting member from the automatic transmission ASSY.

Captions in illustration

➡	Bolt
⇨	Nut, washer

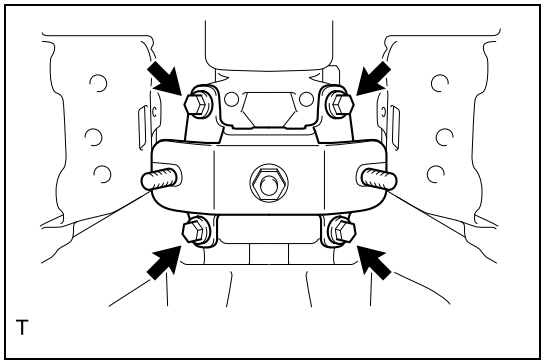

22. Removal of engine mounting insulator RR No.1
    (1) Remove 4 bolts to remove the engine mounting insulator RR No.1 from the automatic transmission ASSY.

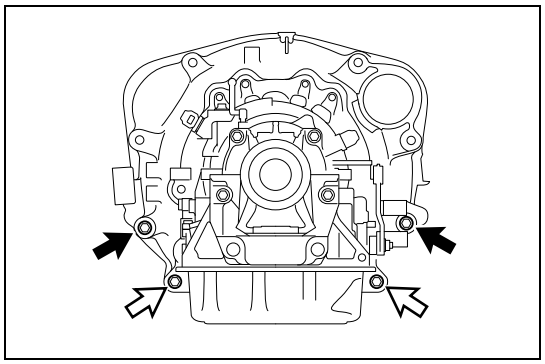

23. Removal of automatic transmission ASSY
    (1) Remove 2 bolts and 2 nuts to remove the automatic transmission ASSY.

Captions in illustration

➡	Bolt
⇨	Nut

CAUTION:
To prevent damage to the knock pin, do not pry apart the contact surface of the automatic transmission ASSY and the engine.

AT

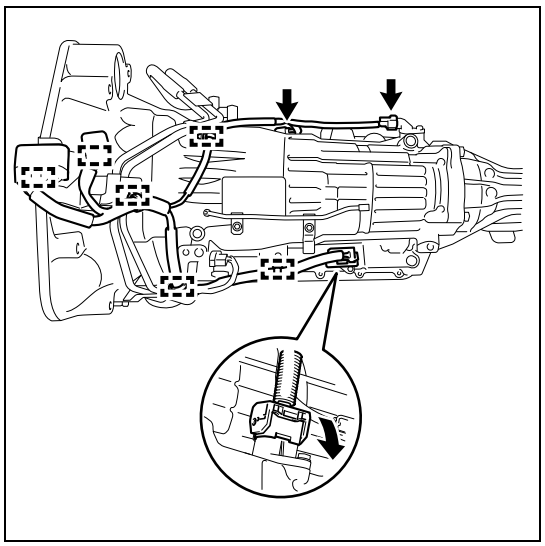

24. Removal of wiring harness
    (1) Disconnect the neutral start switch ASSY connector, transmission wire connector, and transmission revolution sensor (SP2) connector.
    NOTE:
    Release the claw and tilt the lever downward to disconnect the connector of the transmission wire.
    (2) Release the 6 clamps to remove the wiring harness from the automatic transmission ASSY.

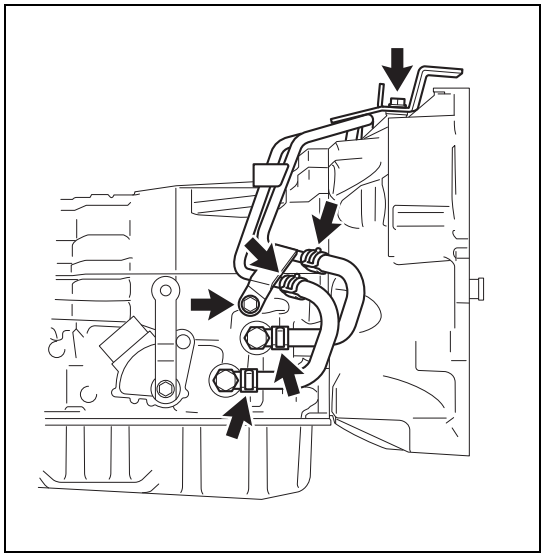

25. Removal of oil cooler tube
    (1) Move 4 hose clamps and remove the 2 oil cooler hoses.
    (2) Remove 2 bolts to remove the oil cooler tube.

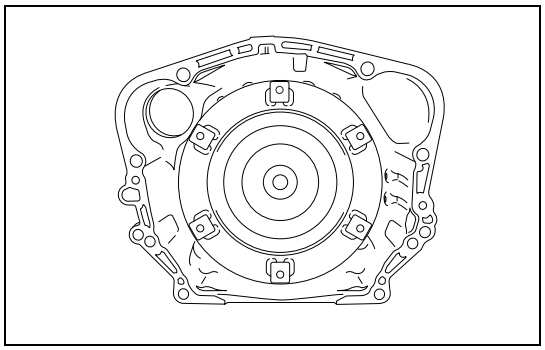

26. Removal of torque converter ASSY
    (1) Remove the torque converter ASSY from the automatic transmission ASSY.

27. Torque converter ASSY check (refer to AT - 320)

Installation

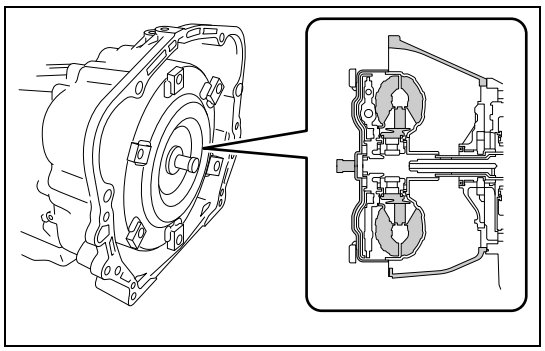

1. Installation of torque converter ASSY
    (1) Engage the input shaft spline with the turbine liner spline.

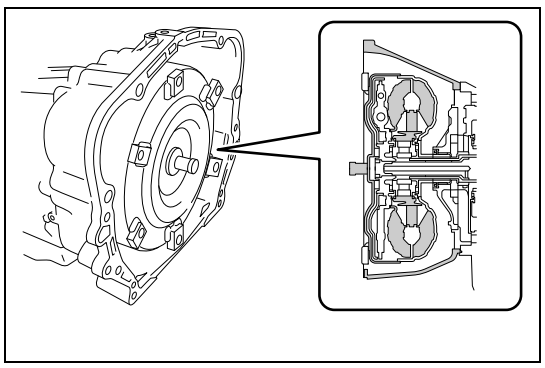

    (2) Engage the stator shaft spline with the stator spline while turning the torque converter ASSY about 180° clockwise.
    NOTE:
    If it is difficult to engage the stator shaft spline with the stator spline, reverse the converter about 10 mm and then turn the torque converter ASSY again to engage the splines.

AT

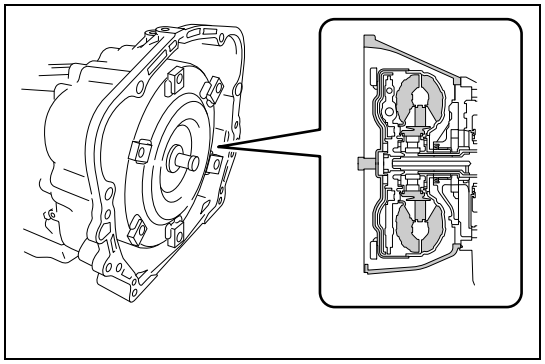

(3) Turn the torque converter ASSY clockwise to engage the key of the oil pump drive gear with the key groove of the torque converter ASSY.
CAUTION:
Do not press the torque converter ASSY excessively to engage it.

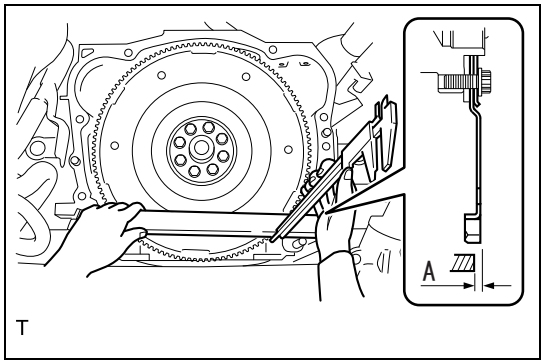

(4) Measure dimension A between the automatic transmission ASSY installing surface of the engine block and the torque converter installing surface of the drive plate.

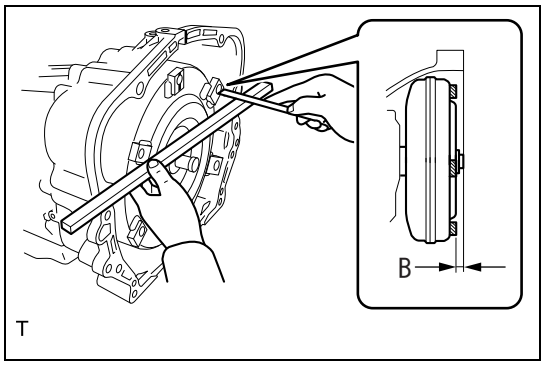

(5) Measure dimension B from the end face of the housing after the torque converter ASSY is installed to the converter set block, and check that it is larger than dimension A.
Standard value: B = A + 1 mm {0.04 in} or more

AT

2. Installation of oil cooler pipe
   (1) Install the oil cooler pipe with 2 bolts.
   Standard value:T=21N·m {214kgf·cm} {15.5ft·lbf}
   (2) Install 2 new oil cooler hoses with 4 hose clamps.

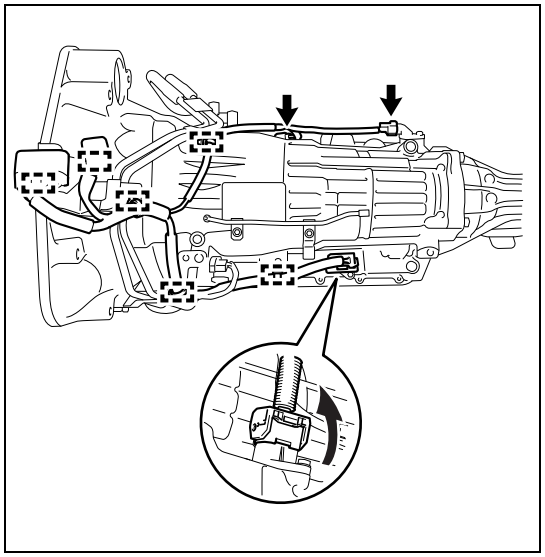

3. Installation of wiring harness
   (1) Engage the 6 clamps and install the wiring harness to the automatic transmission ASSY.
   (2) Connect the neutral start switch ASSY connector, transmission wire connector, and transmission revolution sensor (SP2) connector.
   NOTE:
   For the transmission wire connector, push up the lever until a sound indicating the claw is hooked is heard.

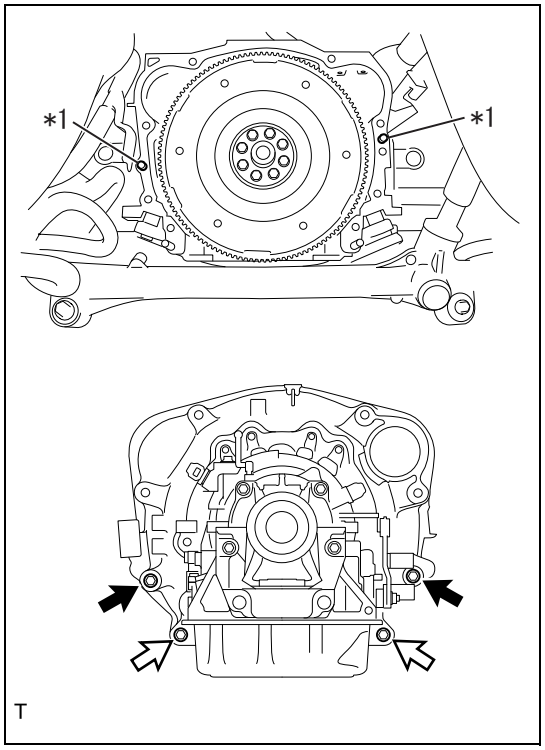

4. Installation of automatic transmission ASSY
   (1) Make sure that the knock pins are attached to 2 locations on the engine side.
   (2) Keep the engine and the automatic transmission ASSY horizontal, then align the knock pins and the knock pin holes and tighten the 2 bolts and 2 nuts shown in the figure.

Captions in illustration

*1	Knock pin
➡	Bolt
⇨	Nut

Standard value:T=50N·m {510kgf·cm} {36.9ft·lbf}

CAUTION:
Do not pry apart the automatic transmission ASSY with excessive force.

5. Installation of engine mounting insulator RR No.1
   (1) Install the engine mounting insulator RR No.1 to the automatic transmission ASSY with 4 bolts.
   Standard value:T=40N·m {408kgf·cm} {29.5ft·lbf}
6. Installation of engine rear mounting member
   (1) Install the engine rear mounting member with 4 bolts, 2 nuts, and 2 washers.
   Standard value:T=55N·m {561kgf·cm} {40.6ft·lbf} (nut)
   T=65N·m {663kgf·cm} {17.0ft·lbf} (bolt)
7. Installation of exhaust pipe bracket
   (1) Install the exhaust pipe bracket with 2 bolts.
   Standard value:T=23N·m {235kgf·cm} {17.0ft·lbf}
8. Connection of floor shift gear shifting rod SUB-ASSY No.1
   (1) Install the grommet and spacer to the control shaft lever RH.
   (2) Connect the floor shift gear shifting rod SUB-ASSY No.1 to the control shaft lever RH and install the snap pin and the shaft.
   (3) Set the select lever to N position.

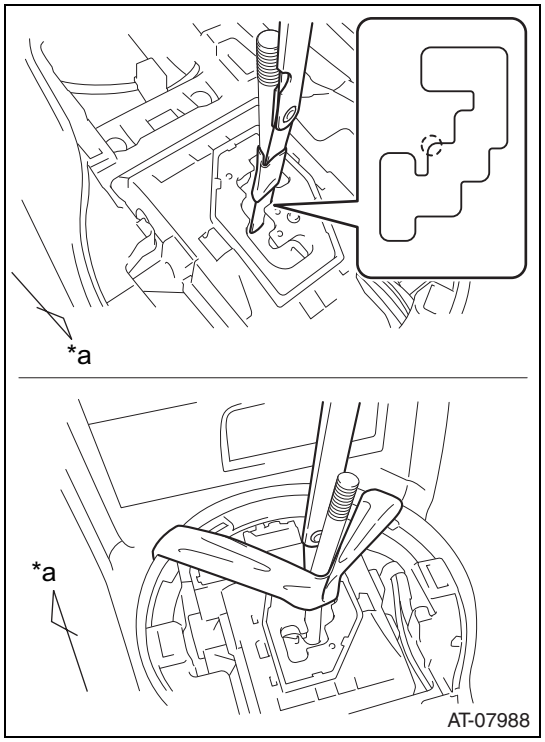

(4) Insert a 0.3 mm thickness gauge between the select lever and the guide plate, and secure it with tape, etc.
CAUTION:
Keep the thickness gauge from entering the portion (arc) shown in the figure.

Captions in illustration

*a	Front side of vehicle

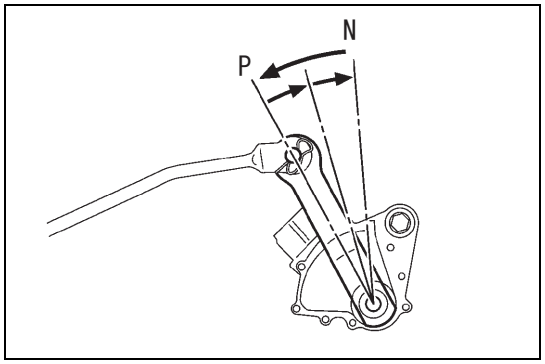

(5) Pull the floor shift gear shifting rod SUB-ASSY No.1 toward the rear of the vehicle until it stops, then put it back 2 steps (to N position).

(6) Temporarily install the floor shift gear shifting rod SUB-ASSY No.1 with a nut while seating it on the flat surface of the swivel.
CAUTION:
Be sure to seat it by hand and temporarily tighten the nut.

(7) Tighten the nut with the arm COMPL lightly pressed toward the rear of the vehicle.
Standard value:T=18N·m {184kgf·cm} {13.3ft·lbf}
CAUTION:
- Do not press the arm COMPL excessively.
- Check that the floor shift gear shifting rod SUB-ASSY No.1 remains seated on the flat surface of the swivel.

9. Installation of transmission revolution sensor (NT) (refer to AT - 170)
10. Connection of oil cooler tube
    (1) Tighten the oil cooler pipe together with the oil cooler tube with 2 bolts.
    Standard value:T=21N·m {214kgf·cm} {15.5ft·lbf}
11. Installation of transmission oil cooler hose
    (1) Install 2 new transmission oil cooler hoses with 4 hose clamps.
12. Installation of exhaust pipe ASSY FR
    (Refer to IE - 36)
13. Connection of automatic transmission ASSY
    (1) Tighten the 2 connecting bolts on the automatic transmission ASSY.
    Standard value:T=50N·m {510kgf·cm} {36.9ft·lbf}
14. Remove the SST.

15. Installation of drive plate and torque converter setting bolt
    (1) Install the drive plate and 6 torque converter setting bolts.
    Standard value:T=25N·m {255kgf·cm} {18.4ft·lbf}
    CAUTION:
    - Be careful not to drop the drive plate and the torque converter setting bolts into the clutch housing.
    - Be careful not to damage the drive plate and the torque converter setting bolts.
16. Installation of flywheel housing under cover
    (1) Install the flywheel housing under cover.
17. Installation of vacuum pipe
    (1) Install the vacuum pipe with 2 bolts.
    Standard value:T=18N·m {184kgf·cm} {13.3ft·lbf}
18. Connection of wiring harness
    (1) Install the engine hanger No.2 with 2 bolts.
    Standard value:T=21N·m {214kgf·cm} {15.5ft·lbf}
    (2) Install the wiring harness clamp bracket with 2 bolts.
    Standard value:T=10N·m {102kgf·cm} {7.4ft·lbf}
    (3) Engage the clamp to connect the wiring harness.

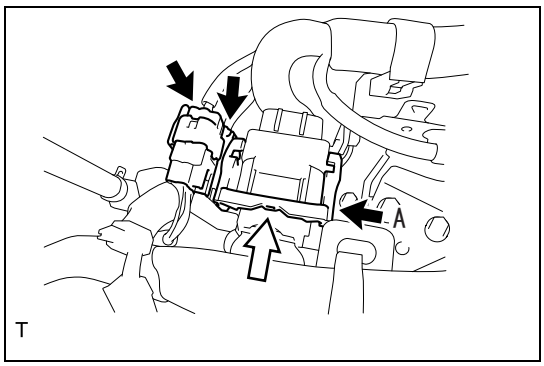

    (4) Connect the 3 connectors.
    NOTE:
    For connector A, push down the lever until a sound indicating the claw is hooked is heard.

Captions in illustration

⇨	Lock unit

    (5) Engage the 4 clamps to connect the wiring harness to the intake manifold.
    (6) Connect the ground wire with the bolt.
    Standard value:T=13N·m {133kgf·cm} {9.6ft·lbf}

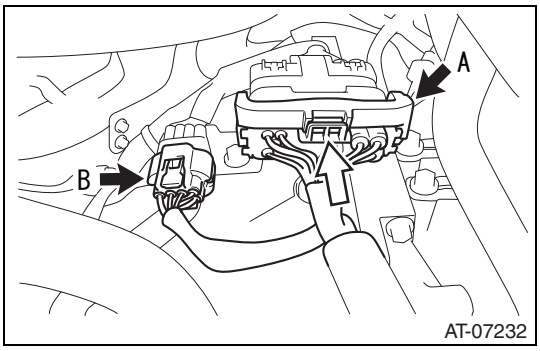

    (7) Connect the 2 connectors.
    NOTE:
    For connector A, push down the lever until a sound indicating the claw is hooked is heard.

Captions in illustration

⇨	Lock unit

19. Installation of starter ASSY
    (Refer to ST - 41)
20. Installation of air cleaner ASSY W/hose
    (Refer to EM - 8)
21. Installation of stabilizer bar FR
    (Refer to FP - 23)
22. Installation of propeller shaft W/ center bearing ASSY
    (Refer to DP - 16)
23. Installation of under cover COMPL T/M (refer to IE - 46)
24. Installation of under cover front AL (refer to IE - 46)

AT

25. Connection of battery ground terminal (refer to BH - 35)
26. Check of select lever position (refer to AT - 210)
27. Filling of automatic transmission fluid
    (Refer to AT - 163)
28. Exhaust gas leakage check (Refer to IE - 46)
29. Initialization when removing/installing battery terminals
    (Refer to IN - 6)

Automatic transmission unit

Exploded view

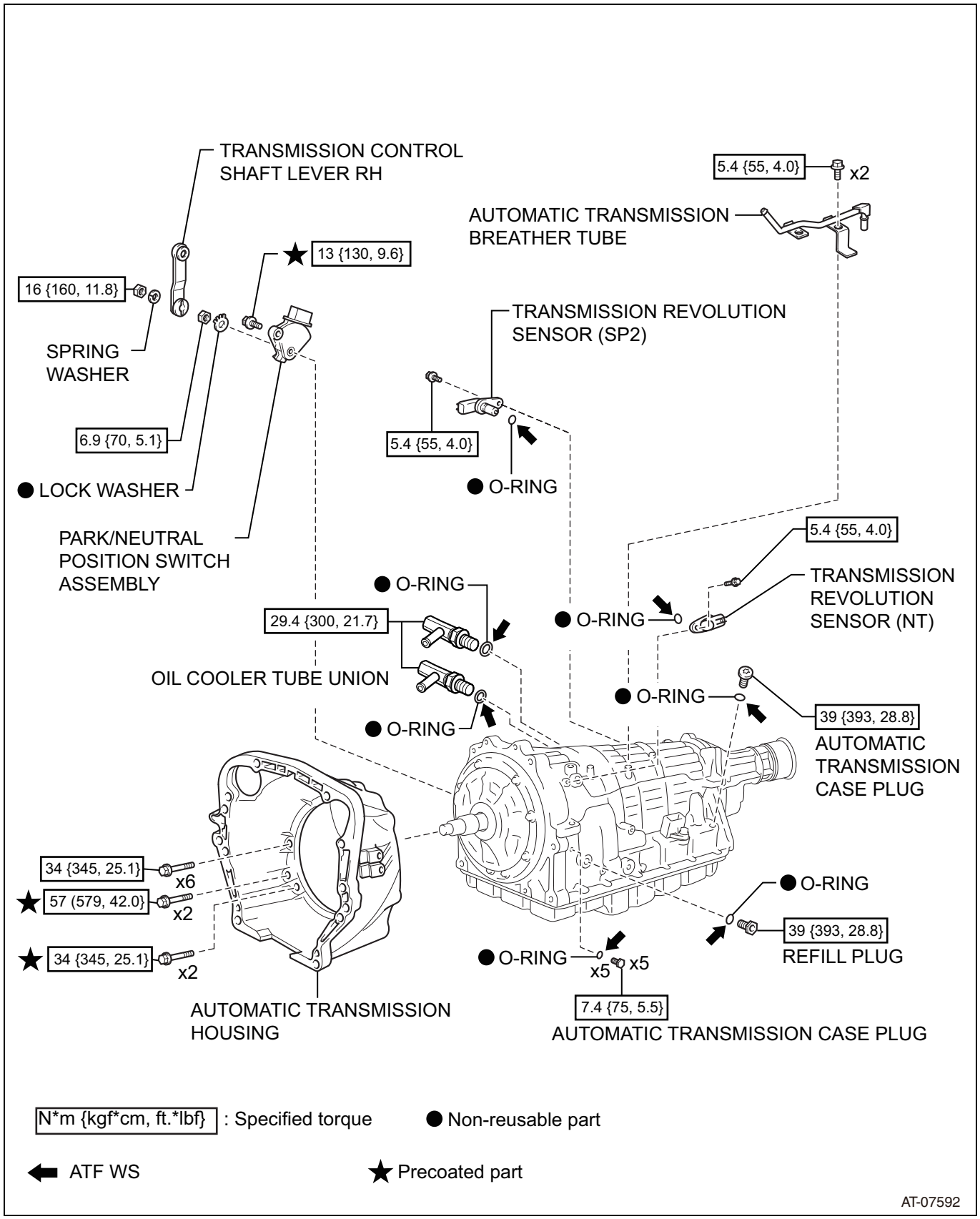

AT

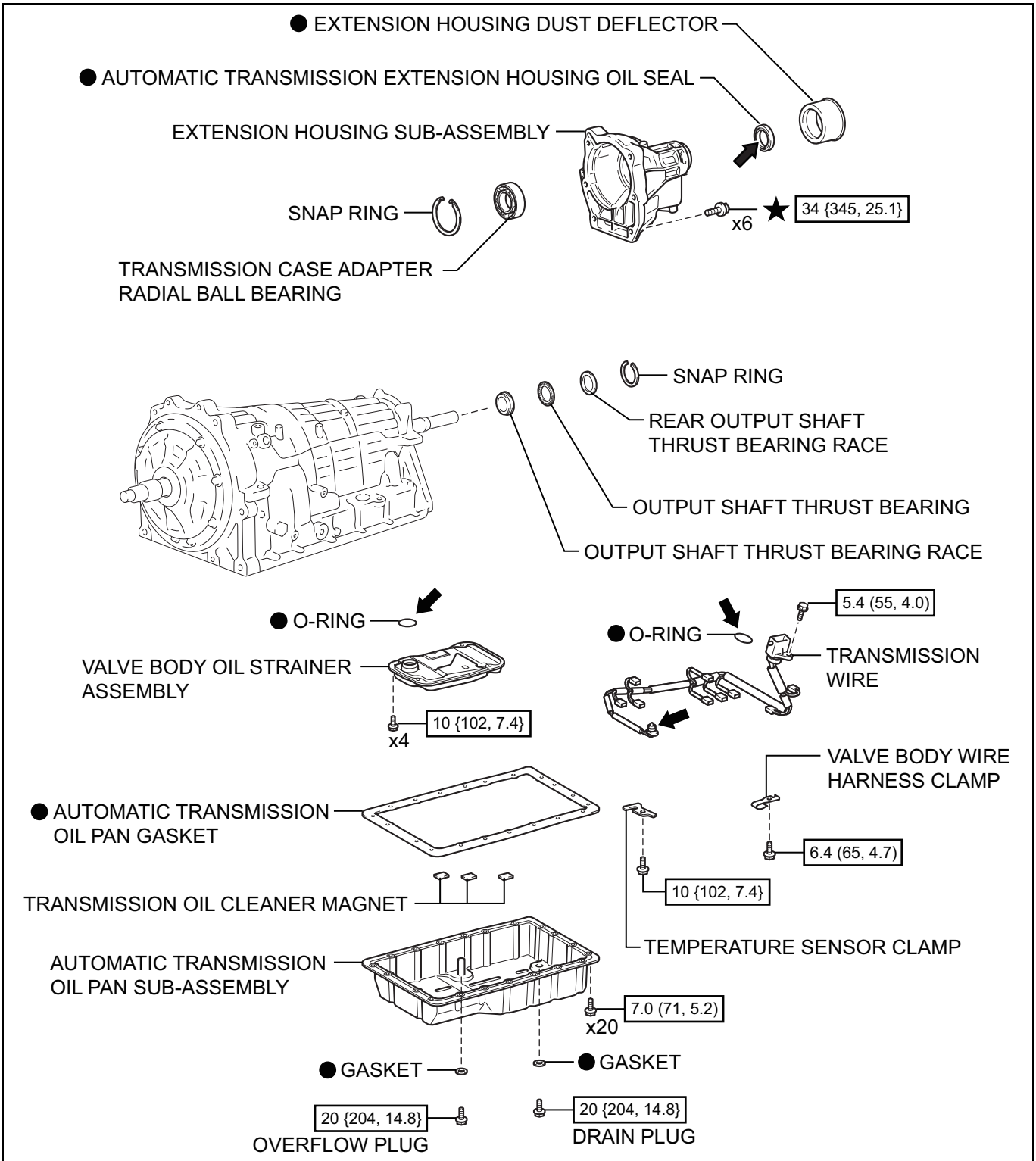

AT

N*m {kgf*cm, ft.*lbf} : Specified torque

● Non-reusable part

⬅ ATF WS

★ Precoated part

AT-07499

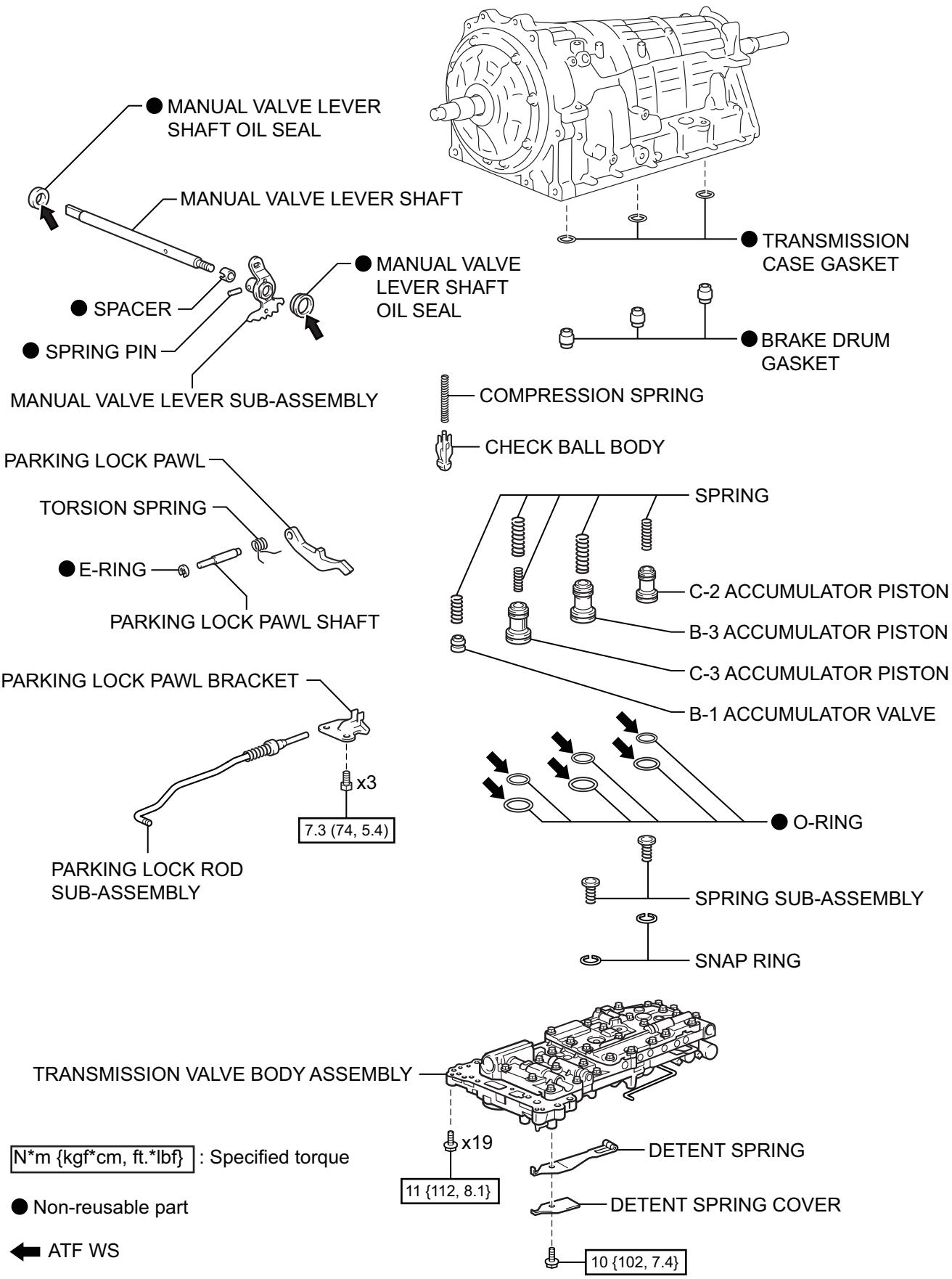
● MANUAL VALVE LEVER SHAFT OIL SEAL
MANUAL VALVE LEVER SHAFT
● SPACER
● SPRING PIN
MANUAL VALVE LEVER SUB-ASSEMBLY
● MANUAL VALVE LEVER SHAFT OIL SEAL
● TRANSMISSION CASE GASKET
● BRAKE DRUM GASKET
COMPRESSION SPRING
CHECK BALL BODY
PARKING LOCK PAWL
TORSION SPRING
● E-RING
PARKING LOCK PAWL SHAFT
SPRING
C-2 ACCUMULATOR PISTON
B-3 ACCUMULATOR PISTON
C-3 ACCUMULATOR PISTON
B-1 ACCUMULATOR VALVE
PARKING LOCK PAWL BRACKET
x3
7.3 (74, 5.4)
PARKING LOCK ROD SUB-ASSEMBLY
● O-RING
SPRING SUB-ASSEMBLY
SNAP RING
TRANSMISSION VALVE BODY ASSEMBLY
x19
11 {112, 8.1}
DETENT SPRING
DETENT SPRING COVER
10 {102, 7.4}
N*m {kgf*cm, ft.*lbf} : Specified torque
● Non-reusable part
ATF WS
AT-07985

AT

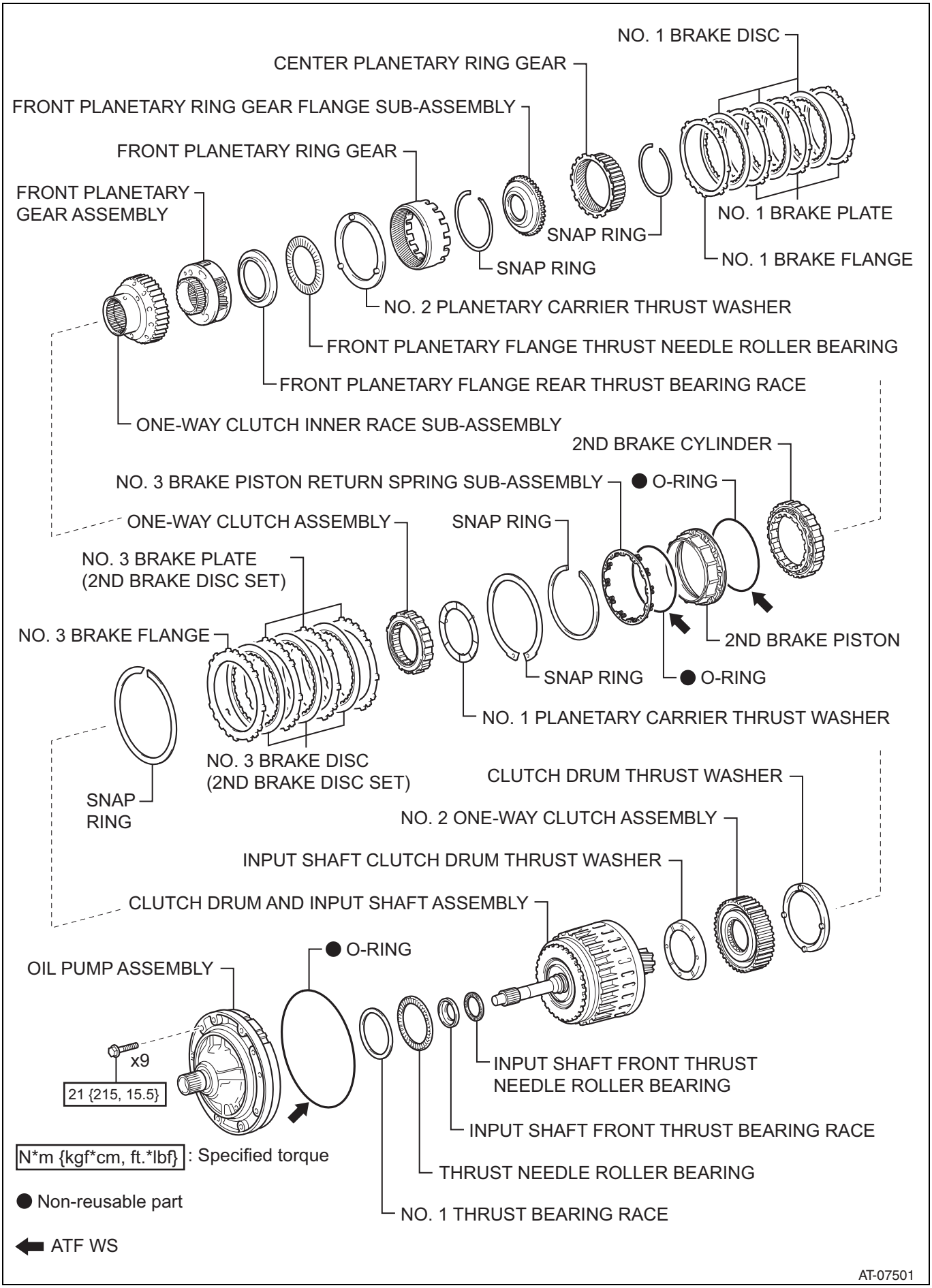
NO. 1 BRAKE DISC
CENTER PLANETARY RING GEAR
FRONT PLANETARY RING GEAR FLANGE SUB-ASSEMBLY
FRONT PLANETARY RING GEAR
FRONT PLANETARY GEAR ASSEMBLY
SNAP RING
NO. 1 BRAKE PLATE
NO. 1 BRAKE FLANGE
SNAP RING
NO. 2 PLANETARY CARRIER THRUST WASHER
FRONT PLANETARY FLANGE THRUST NEEDLE ROLLER BEARING
FRONT PLANETARY FLANGE REAR THRUST BEARING RACE
ONE-WAY CLUTCH INNER RACE SUB-ASSEMBLY
2ND BRAKE CYLINDER
NO. 3 BRAKE PISTON RETURN SPRING SUB-ASSEMBLY
● O-RING
ONE-WAY CLUTCH ASSEMBLY
SNAP RING
NO. 3 BRAKE PLATE (2ND BRAKE DISC SET)
NO. 3 BRAKE FLANGE
2ND BRAKE PISTON
SNAP RING
● O-RING
NO. 1 PLANETARY CARRIER THRUST WASHER
NO. 3 BRAKE DISC (2ND BRAKE DISC SET)
SNAP RING
CLUTCH DRUM THRUST WASHER
NO. 2 ONE-WAY CLUTCH ASSEMBLY
INPUT SHAFT CLUTCH DRUM THRUST WASHER
CLUTCH DRUM AND INPUT SHAFT ASSEMBLY
● O-RING
OIL PUMP ASSEMBLY
x9
21 {215, 15.5}
INPUT SHAFT FRONT THRUST NEEDLE ROLLER BEARING
INPUT SHAFT FRONT THRUST BEARING RACE
THRUST NEEDLE ROLLER BEARING
NO. 1 THRUST BEARING RACE
N*m {kgf*cm, ft.*lbf} : Specified torque
● Non-reusable part
ATF WS
AT-07501

CLUTCH DRUM AND INPUT SHAFT ASSEMBLY:

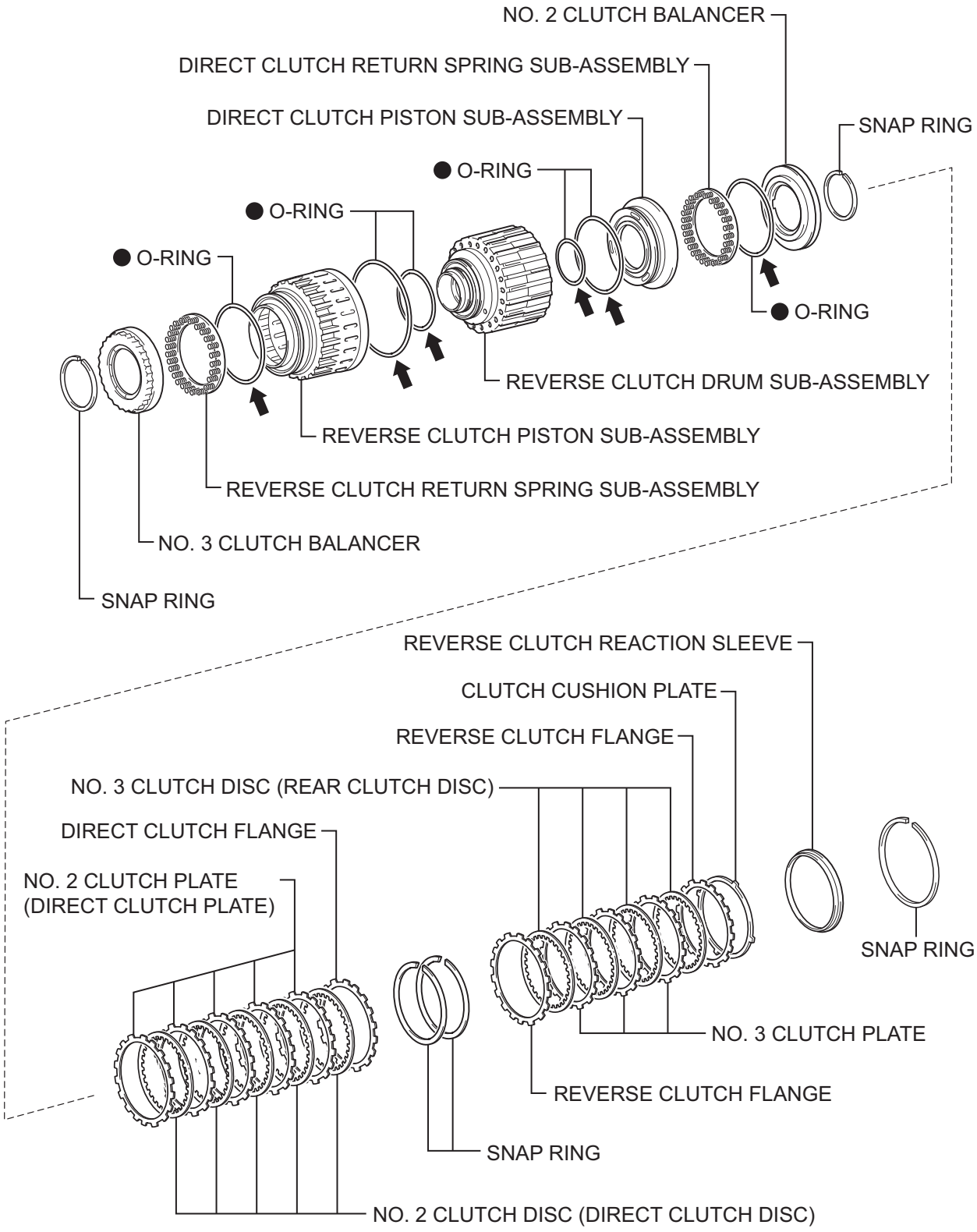

● Non-reusable part

⬅ ATF WS

AT-07502

AT

CLUTCH DRUM AND INPUT SHAFT ASSEMBLY:

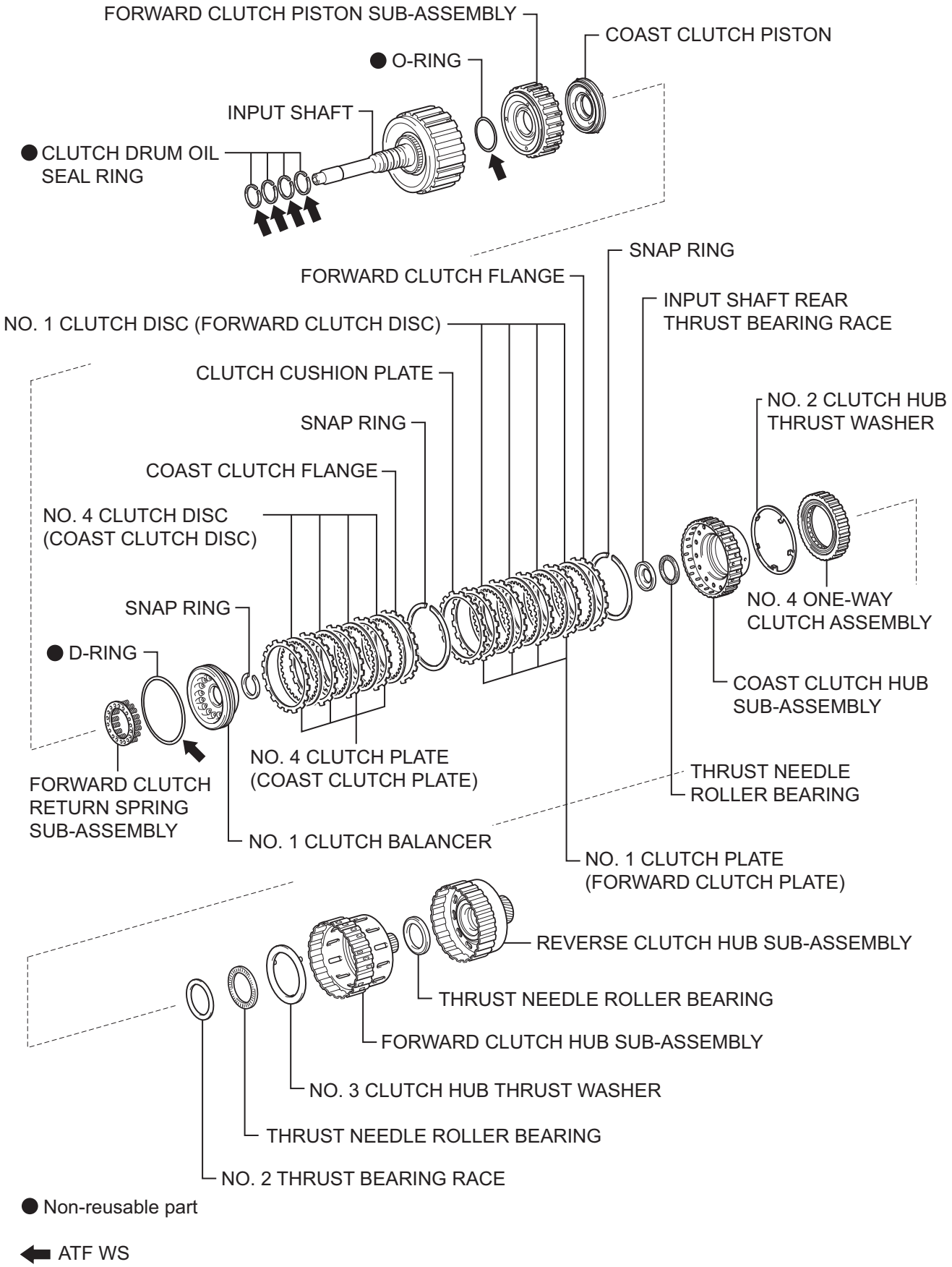

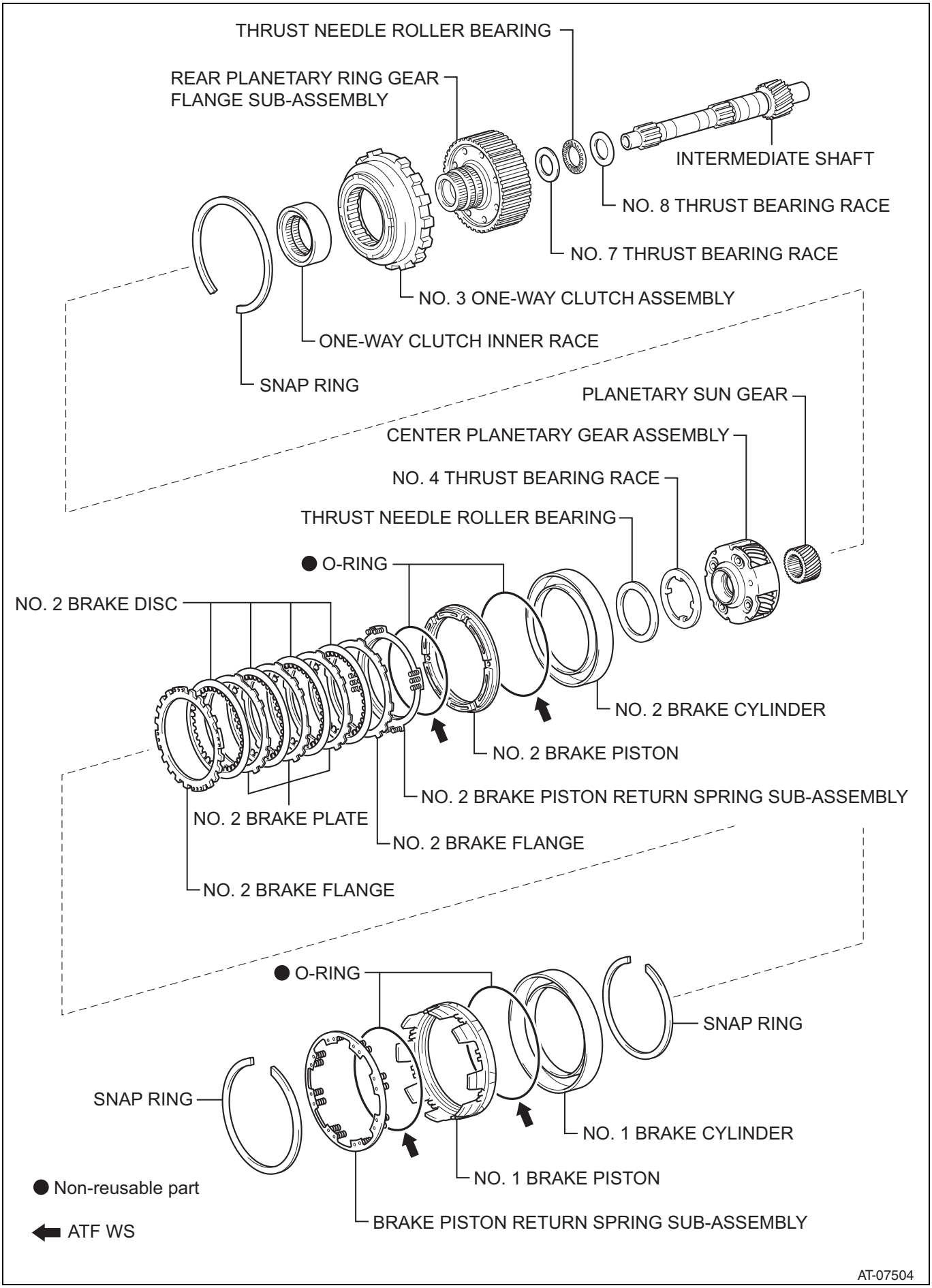
THRUST NEEDLE ROLLER BEARING
REAR PLANETARY RING GEAR FLANGE SUB-ASSEMBLY
INTERMEDIATE SHAFT
NO. 8 THRUST BEARING RACE
NO. 7 THRUST BEARING RACE
NO. 3 ONE-WAY CLUTCH ASSEMBLY
ONE-WAY CLUTCH INNER RACE
SNAP RING
PLANETARY SUN GEAR
CENTER PLANETARY GEAR ASSEMBLY
NO. 4 THRUST BEARING RACE
THRUST NEEDLE ROLLER BEARING
● O-RING
NO. 2 BRAKE DISC
NO. 2 BRAKE CYLINDER
NO. 2 BRAKE PISTON
NO. 2 BRAKE PISTON RETURN SPRING SUB-ASSEMBLY
NO. 2 BRAKE PLATE
NO. 2 BRAKE FLANGE
NO. 2 BRAKE FLANGE
● O-RING
SNAP RING
SNAP RING
NO. 1 BRAKE CYLINDER
NO. 1 BRAKE PISTON
BRAKE PISTON RETURN SPRING SUB-ASSEMBLY
● Non-reusable part
ATF WS
AT-07504

AT

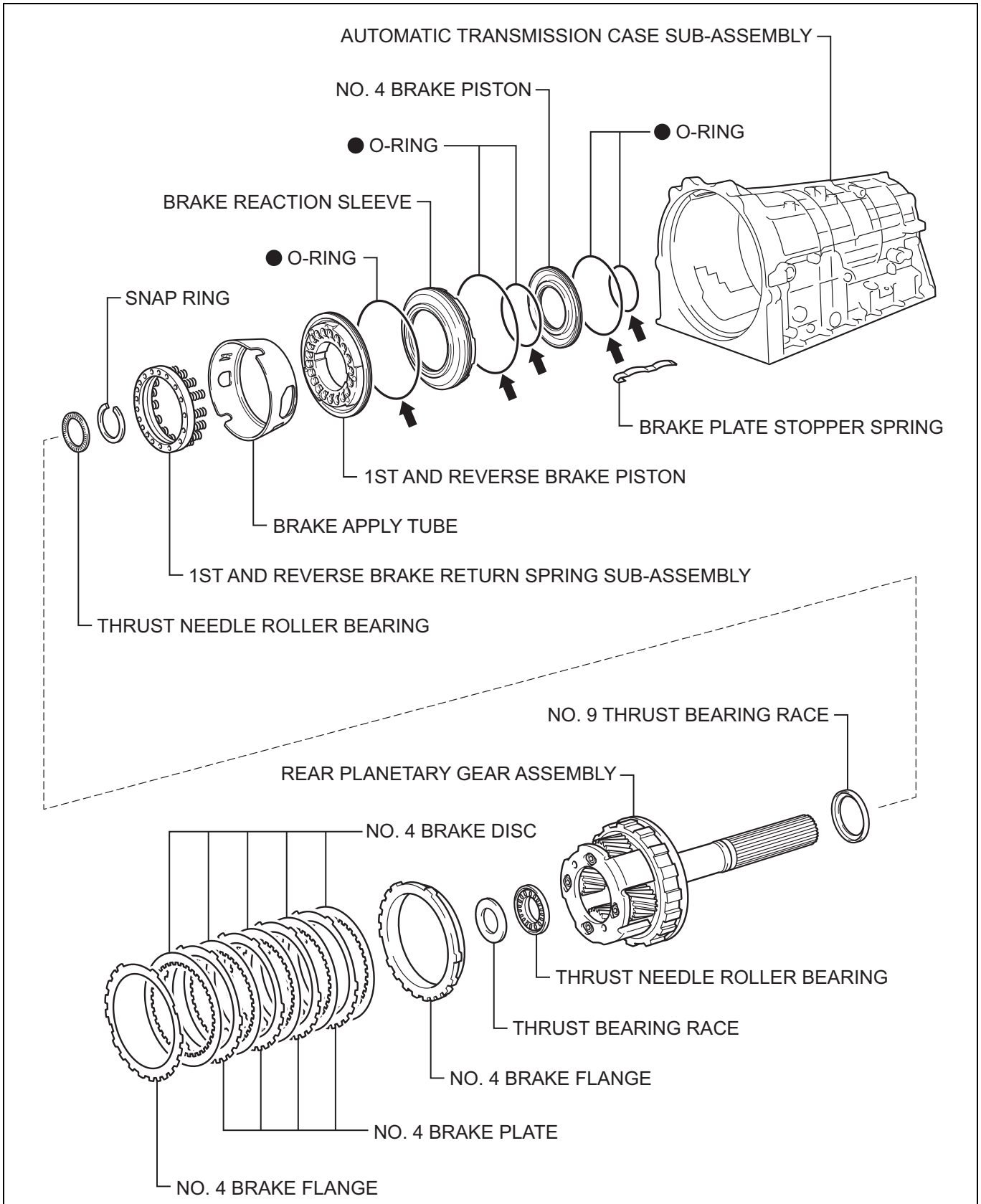

AT

● Non-reusable part

⬅ ATF WS

AT-07505

Disassembly

1. Removal of refill plug
   (1) Remove the refill plug.
   (2) Remove the O-ring from the refill plug.

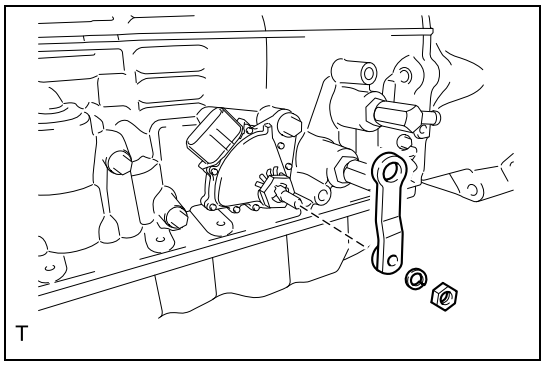

2. Removal of transmission control shaft lever RH
   (1) Remove the nut, spring washer, and transmission control shaft lever RH from the neutral start switch ASSY.

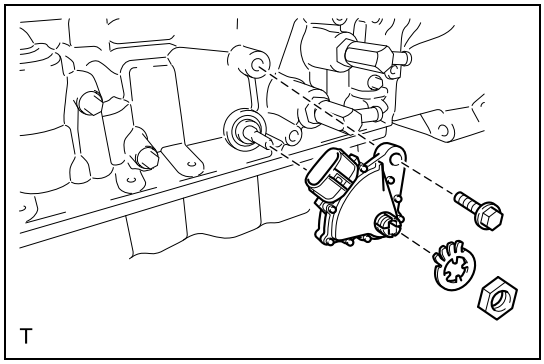

3. Removal of neutral start switch ASSY
   (1) Use a flat tip screwdriver to bend the tab of the lock washer.
   (2) Remove the nut and lock washer.
   (3) Remove the bolt and neutral start switch ASSY from the automatic transmission case SUB-ASSY.
   NOTE:
   Be sure to keep the manual valve lever shaft from rotating before installation of the neutral start switch ASSY so as to prevent the detent spring from being detached from the manual valve lever shaft.

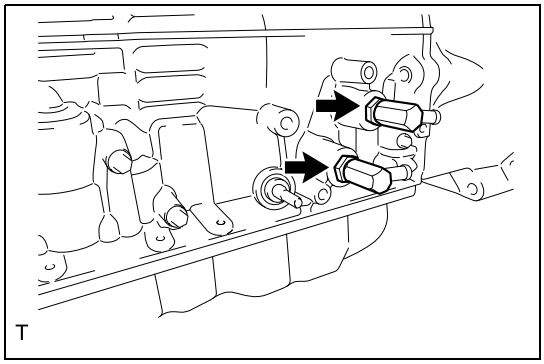

4. Removal of oil cooler tube union
   (1) Remove 2 oil cooler tube unions from the automatic transmission case SUB-ASSY.

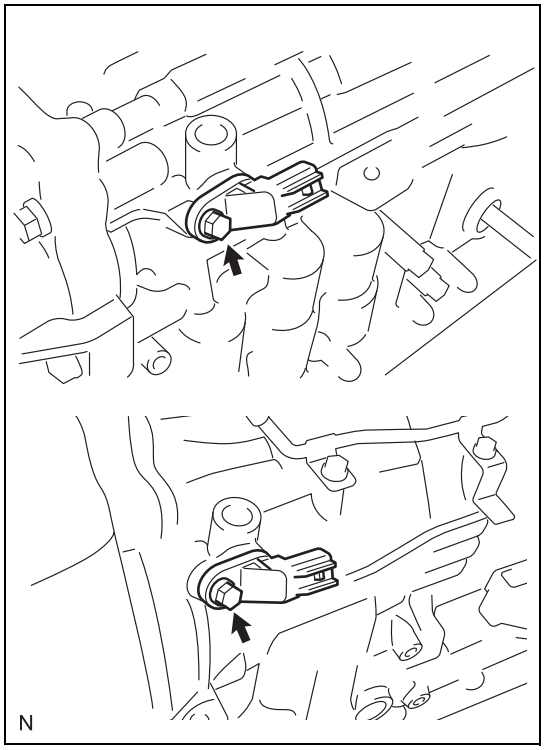

5. Removal of transmission revolution sensor
   (1) Remove 2 bolts and 2 transmission revolution sensors from the automatic transmission case SUB-ASSY.
   (2) Remove 2 O-rings from the 2 transmission revolution sensors.

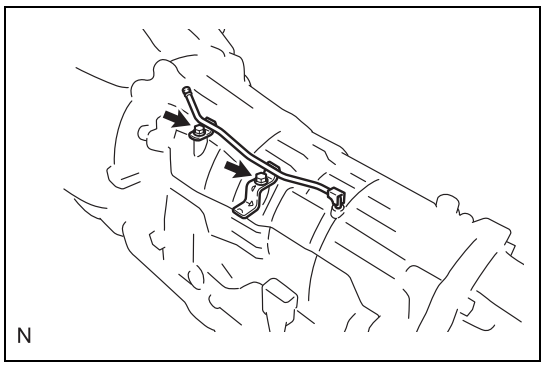

6. Removal of automatic transmission breather tube
   (1) Remove 2 bolts to remove the automatic transmission breather tube from the automatic transmission case SUB-ASSY.

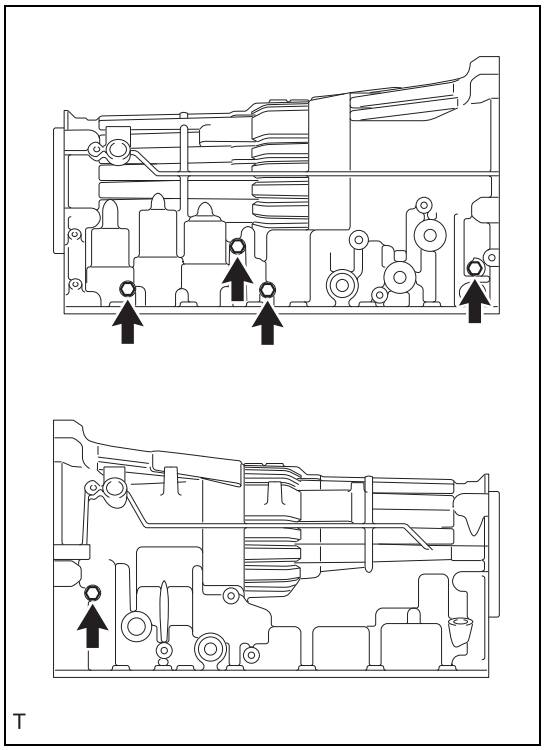

7. Removal of automatic transmission case plug
   (1) Remove 5 automatic transmission case plugs from the automatic transmission case SUB-ASSY.
   (2) Remove 5 O-rings from the 5 automatic transmission case plugs.

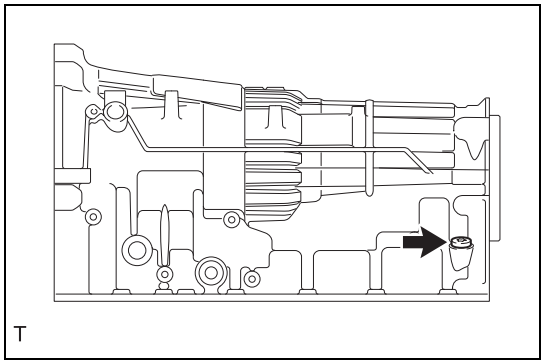
T

(3) Remove the automatic transmission case plug from the automatic transmission case SUB-ASSY using a TORX socket wrench T55.
(4) Remove the O-ring from the automatic transmission case plug.

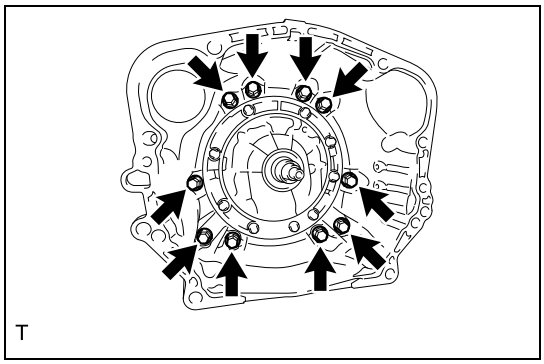
T

8. Removal of automatic transmission housing
(1) Remove 10 bolts to remove the automatic transmission housing from the automatic transmission case SUB-ASSY.

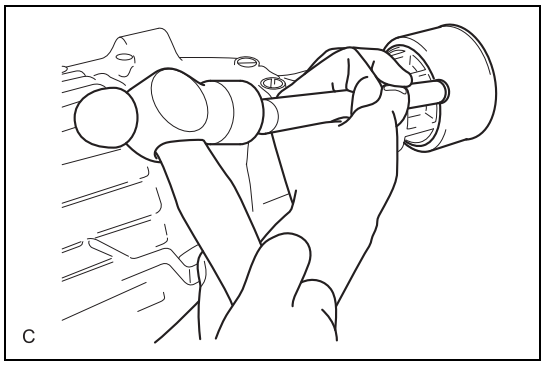
C

9. Removal of extension housing dust deflector
(1) Use a brass bar and a hammer to lightly tap the extension housing dust deflector and remove it from the extension housing SUB-ASSY.
CAUTION:
Be careful not to damage the extension housing SUB-ASSY.

AT

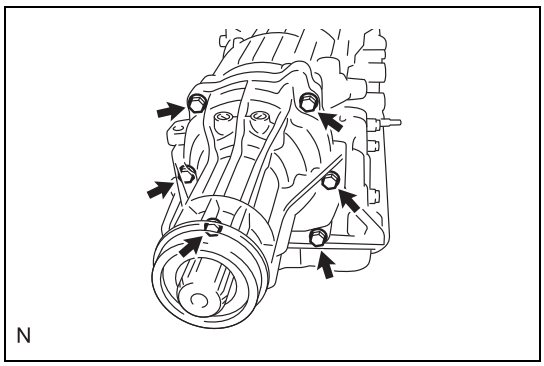
N

10. Removal of extension housing SUB-ASSY
(1) Remove the 6 bolts.

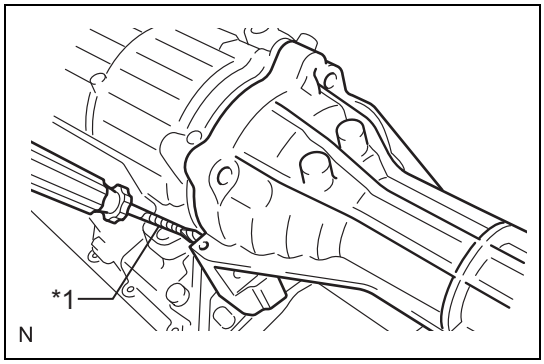

N

(2) Use a flat tip screwdriver to remove the extension housing SUB-ASSY from the automatic transmission case SUB-ASSY.

Captions in illustration

*1	Protective tape

CAUTION:
Be careful not to scratch the mating surface of the extension housing SUB-ASSY and the automatic transmission case SUB-ASSY.
NOTE:
Wrap the tip of a flat tip screwdriver with tape before using it.

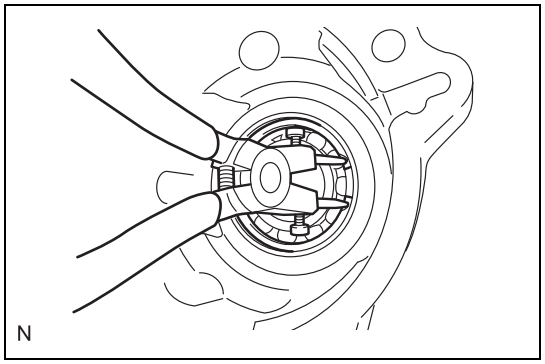

11. Removal of transmission case adapter radial ball bearing
    (1) Remove the snap ring from the extension housing SUB-ASSY.
    (2) Remove the transmission case adapter radial ball bearing from the extension housing SUB-ASSY.

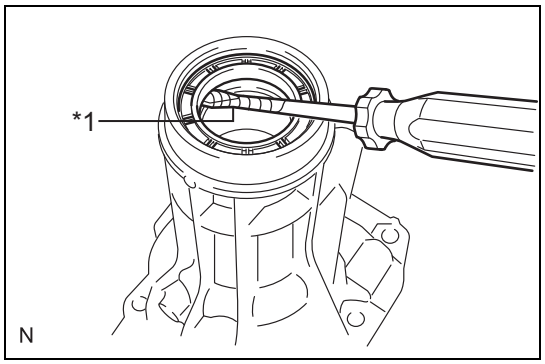

12. Removal of automatic transmission extension housing oil seal
    (1) Use a flat tip screwdriver to remove the automatic transmission extension housing oil seal from the extension housing SUB-ASSY.

Captions in illustration

*1	Protective tape

CAUTION:
Be careful not to damage the extension housing SUB-ASSY.
NOTE:
Wrap the tip of a flat tip screwdriver with tape before using it.

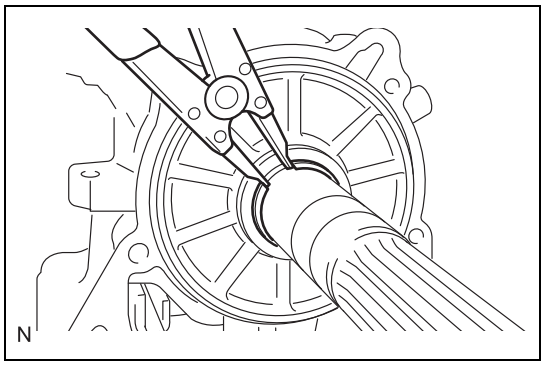

13. Removal of output shaft thrust bearing
    (1) Remove the snap ring from the output shaft of the rear planetary gear ASSY.
    (2) Remove the rear output shaft thrust bearing race, output shaft thrust bearing, and output shaft thrust bearing race.

AT

14. Removal of automatic transmission oil pan SUB-ASSY
    CAUTION:
    Be careful not to turn the transmission to prevent the valve body from becoming dirty with foreign substances accumulating at the bottom of the oil pan.
    (1) Use a 5-mm {0.2-in} socket hexagon wrench to remove the overflow plug and gasket.
    (2) Remove the drain plug and the gasket.

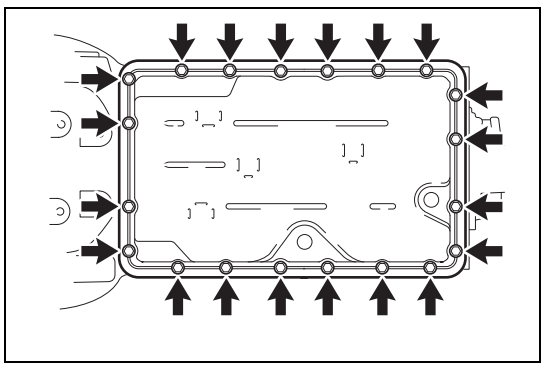

    (3) Remove 20 bolts to remove the automatic transmission oil pan SUB-ASSY and automatic transmission oil pan gasket.

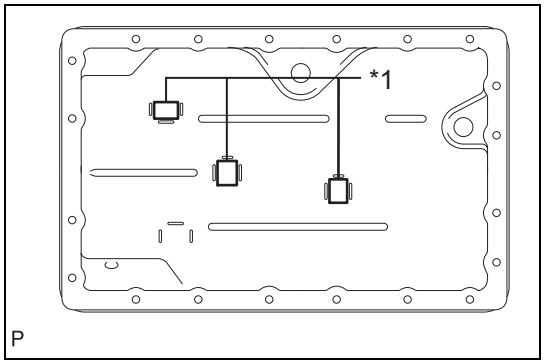

(4) Remove 3 transmission oil cleaner magnets from the automatic transmission oil pan SUB-ASSY.

Captions in illustration

*1	Transmission oil cleaner magnet

(5) Check the particles in the automatic transmission oil pan SUB-ASSY.

(a)If metallic fragments are found, collect them using the removed transmission oil cleaner magnets. Carefully inspect foreign substances or particles in the automatic transmission oil pan SUB-ASSY and on the transmission oil cleaner magnets to check for normal wear at the automatic transmission ASSY.

Steel (magnetic): worn bearing, gear, and clutch plate

Brass (non-magnetic): worn bushing

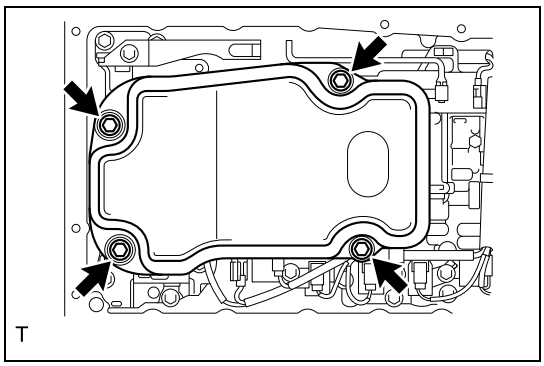

15. Removal of valve body oil strainer ASSY

(1) Remove 4 bolts to remove the valve body oil strainer ASSY from the transmission valve body ASSY.

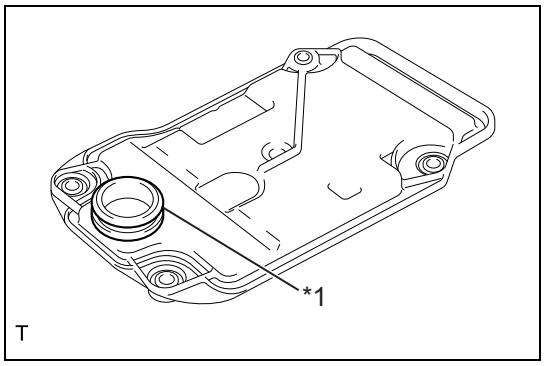

(2) Remove the O-ring from the valve body oil strainer ASSY.

Captions in illustration

*1	O-ring

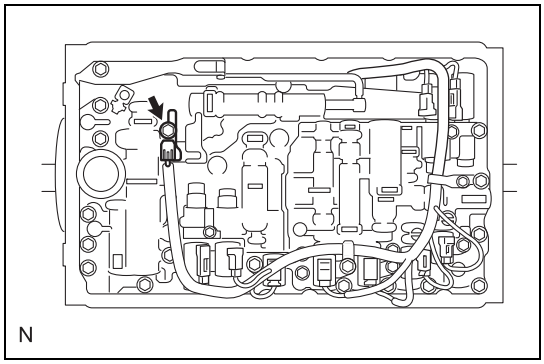

16. Removal of transmission wire

(1) Remove the bolt and hydraulic pressure sensor clamp, then disconnect the ATF hydraulic pressure sensor.

AT

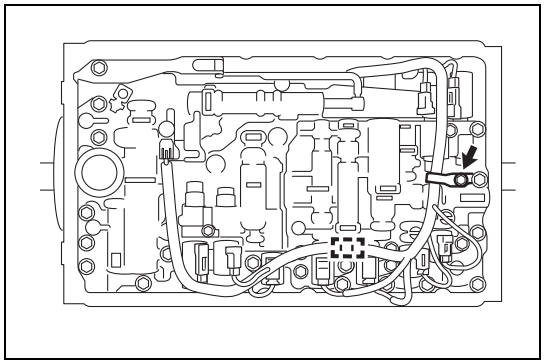

(2) Remove the bolt to remove the clamp from the valve body ASSY.
(3) Disconnect the wiring harness from the clamp.

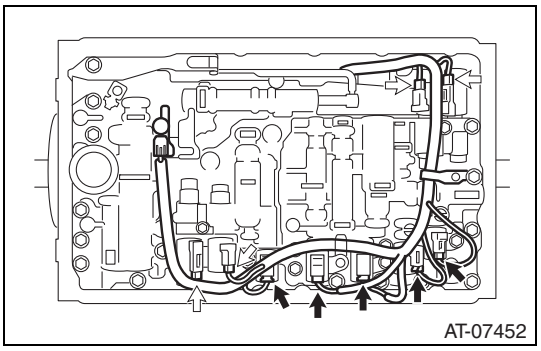

(4) Disconnect the 9 solenoid valve connectors.
NOTE:
Use a thin-tipped flat tip screwdriver for the connector indicated by the white arrow to disconnect the control solenoid connector.

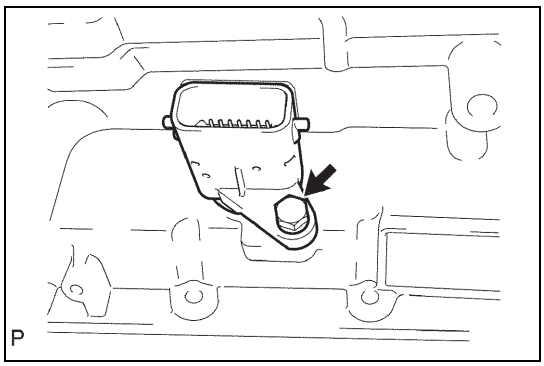

(5) Remove the bolt, then pull out the transmission wire.

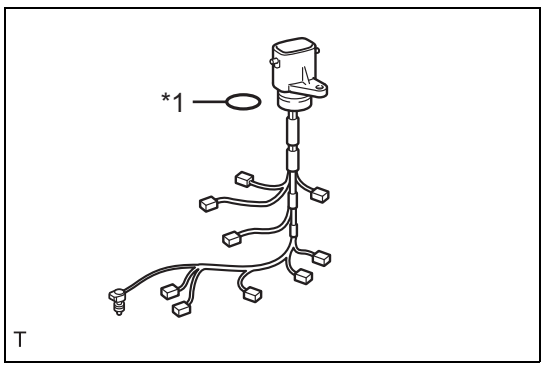

(6) Remove the O-ring from the transmission wire.

Captions in illustration

*1	O-ring

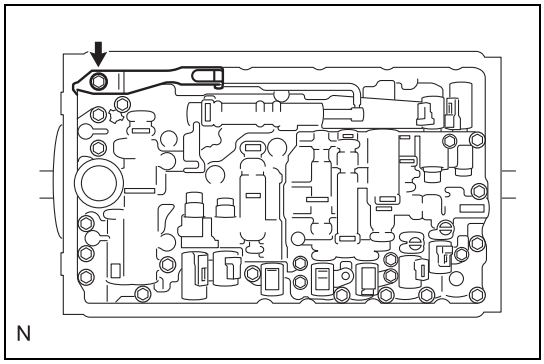

17. Removal of transmission valve body ASSY
    (1) Remove the bolt, detent spring cover, and detent spring from the transmission valve body ASSY.

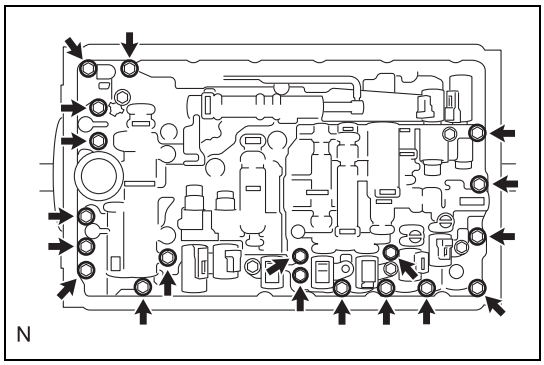

    (2) Remove 19 bolts to remove the transmission valve body ASSY from the automatic transmission case SUB-ASSY.

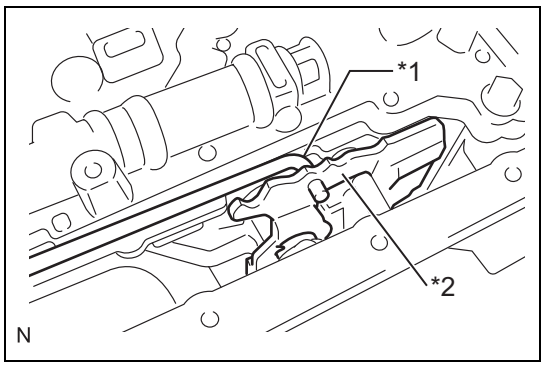

    (3) Remove the manual valve connecting rod SUB-ASSY from the manual valve lever SUB-ASSY.

Captions in illustration

*1	Manual valve connecting rod SUB-ASSY
*2	Manual valve lever SUB-ASSY

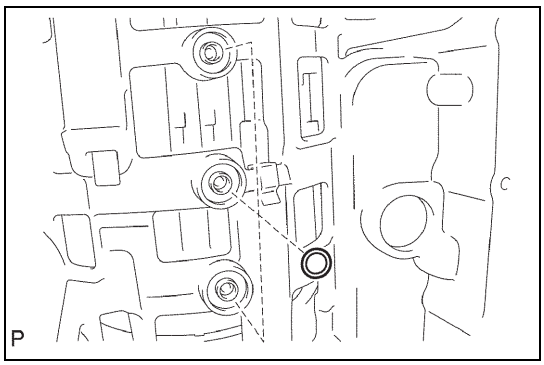

18. Removal of transmission case gasket
    (1) Remove 3 transmission case gaskets from the automatic transmission case SUB-ASSY.

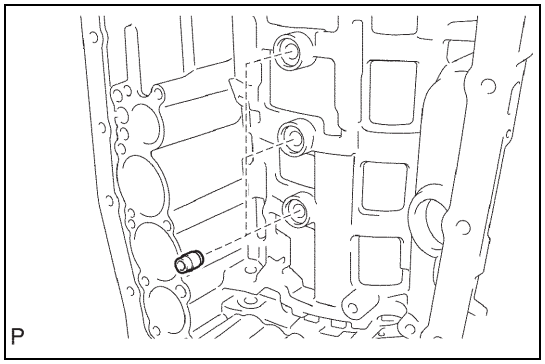

19. Removal of brake drum gasket
    (1) Remove 3 brake drum gaskets from the automatic transmission case SUB-ASSY.

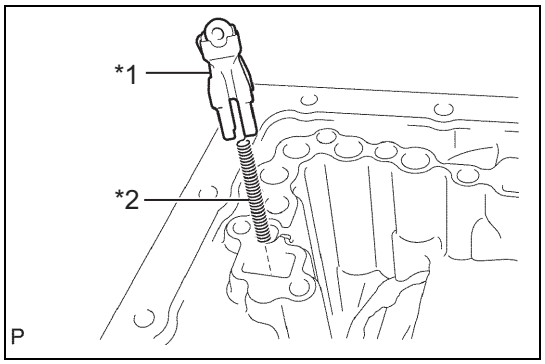

20. Removal of check ball body
    (1) Remove the check ball body and compression spring from the automatic transmission case SUB-ASSY.

Captions in illustration

*1	Check ball body
*2	Compression spring

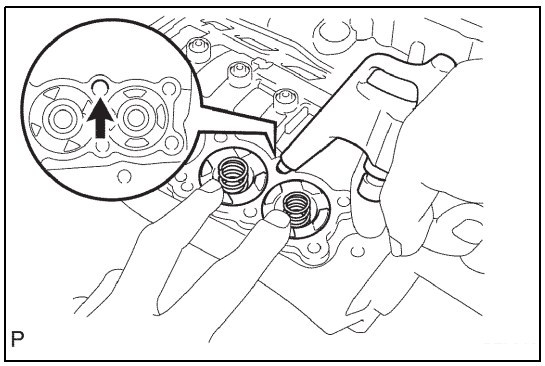

21. Removal of C-2 accumulator piston
    (1) Blow compressed air into the oil hole and remove the C-2 accumulator piston and spring from the automatic transmission case SUB-ASSY.
    CAUTION:
    Be careful as the C-3 and B-3 accumulator pistons may jump out.
    (2) Remove 2 O-rings from the C-2 accumulator piston.

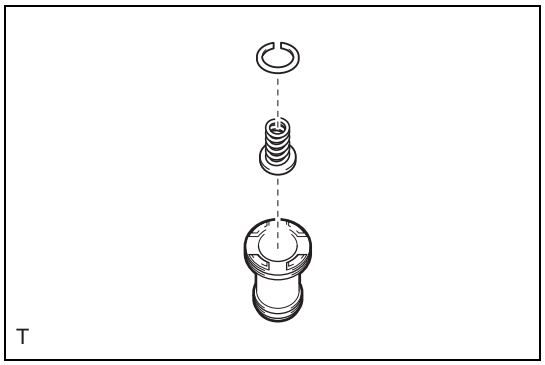

    (3) Use a flat tip screwdriver to remove the snap ring and spring SUB-ASSY from the C-2 accumulator piston.
    CAUTION:
    Be careful not to damage the C-2 accumulator piston.
    NOTE:
    Wrap the tip of a flat tip screwdriver with tape before using it.

22. Removal of B-3 accumulator piston
    (1) Blow compressed air into the oil hole to remove the B-3 accumulator piston and spring from the automatic transmission case SUB-ASSY.
    CAUTION:
    Be careful as the C-3 accumulator piston may jump out.
    (2) Remove 2 O-rings from the B-3 accumulator piston.

AT

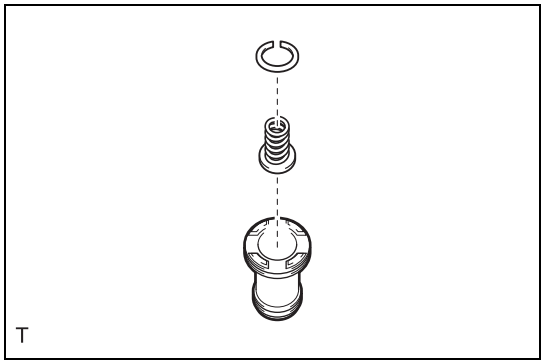

(3) Use a flat tip screwdriver to remove the snap ring and spring SUB-ASSY from the B-3 accumulator piston.
CAUTION:
Be careful not to damage the B-3 accumulator piston.
NOTE:
Wrap the tip of a flat tip screwdriver with tape before using it.

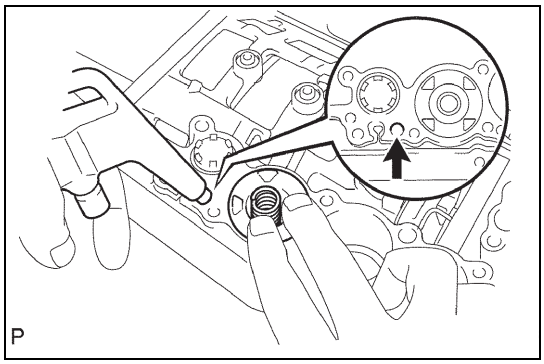

23. Removal of C-3 accumulator piston
(1) Blow compressed air into the oil hole and remove the C-3 accumulator piston and 2 springs from the automatic transmission case SUB-ASSY.
(2) Remove 2 O-rings from the C-3 accumulator piston.

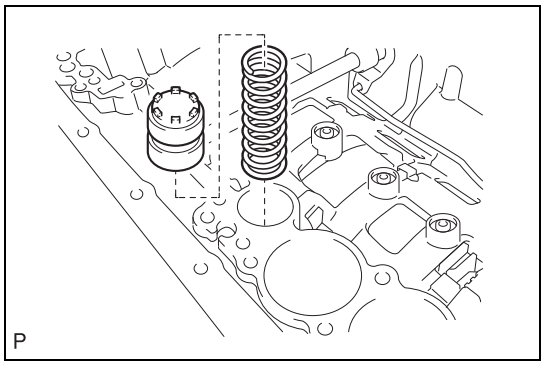

24. Removal of B-1 accumulator valve
(1) Remove the B-1 accumulator valve and spring from the automatic transmission case SUB-ASSY.

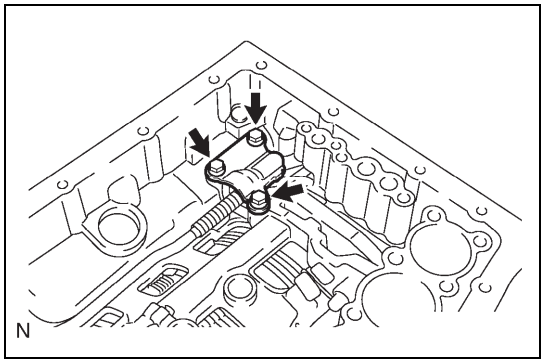

25. Removal of parking lock pole bracket
(1) Remove 3 bolts to remove the parking lock pole bracket from the automatic transmission case SUB-ASSY.

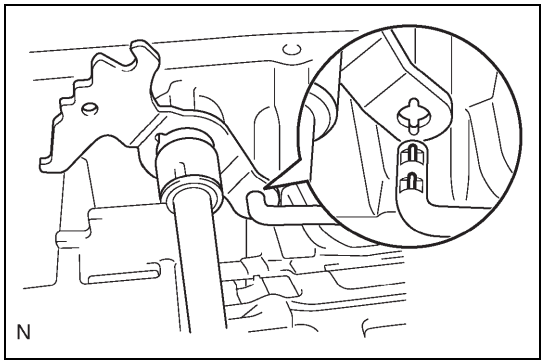

26. Removal of parking lock rod SUB-ASSY
(1) Remove the parking lock rod SUB-ASSY from the manual valve lever SUB-ASSY.

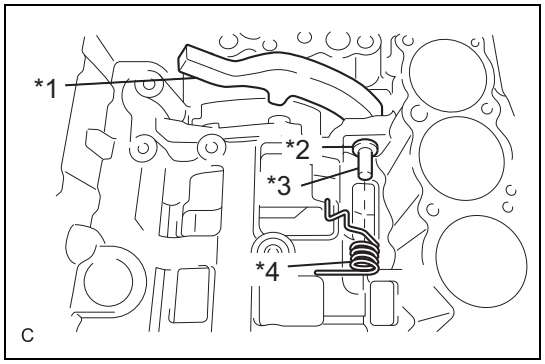

27. Removal of parking lock pole shaft
    (1) Pull out the parking lock pole shaft from the front side and remove the parking lock pole and torsion spring.

Captions in illustration

*1	Parking lock pole
*2	E-ring
*3	Parking lock pole shaft
*4	Torsion spring

    (2) Remove the E-ring from the parking lock pole shaft.

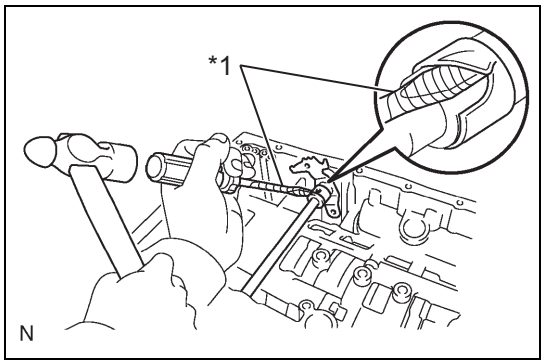

28. Removal of manual valve lever SUB-ASSY
    (1) Use a flat tip screwdriver and a hammer to disconnect the spacer and remove it from the manual valve lever shaft.

Captions in illustration

*1	Protective tape

CAUTION:
Be careful not to damage the manual valve lever shaft.
NOTE:
Wrap the tip of a flat tip screwdriver with tape before using it.

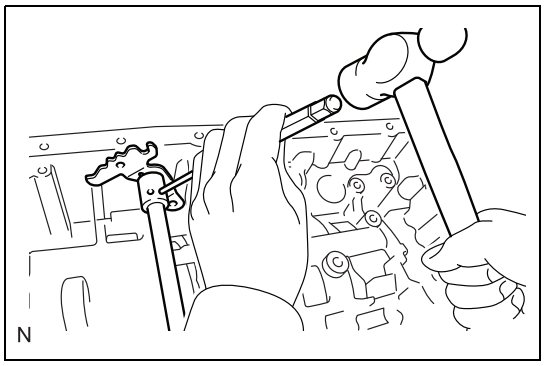

    (2) Use a 3-mm pin punch and hammer to pull out the spring pin.
    NOTE:
    Pull out the spring pin slowly to prevent it from dropping in the automatic transmission case SUB-ASSY.
    (3) Pull out the manual valve lever shaft from the case and remove the manual valve lever SUB-ASSY.

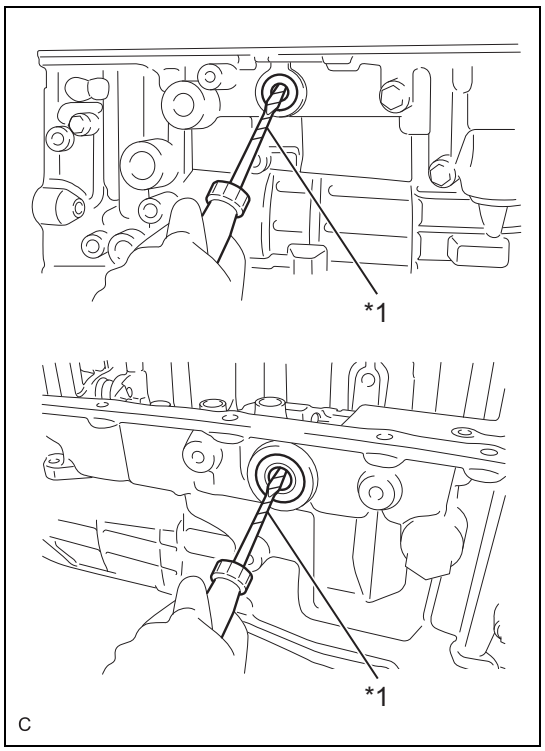

29. Removal of manual valve lever shaft oil seal
    (1) Use a flat tip screwdriver to remove the 2 manual valve lever shaft oil seals from the automatic transmission case SUB-ASSY.

Captions in illustration

*1	Protective tape

CAUTION:
Be careful not to damage the automatic transmission case SUB-ASSY.
NOTE:
Wrap the tip of a flat tip screwdriver with tape before using it.

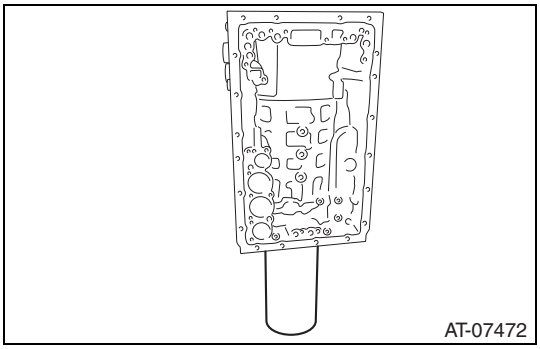

30. Setting of automatic transmission case SUB-ASSY
    (1) Place the automatic transmission case SUB-ASSY on a pipe or tube approx. 125 mm {4.92 in} in inner diameter.
    CAUTION:
    Place it on a level surface.

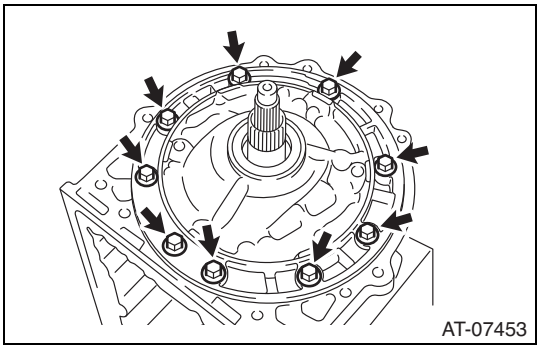

31. Removal of oil pump ASSY
    (1) Remove the 9 bolts.

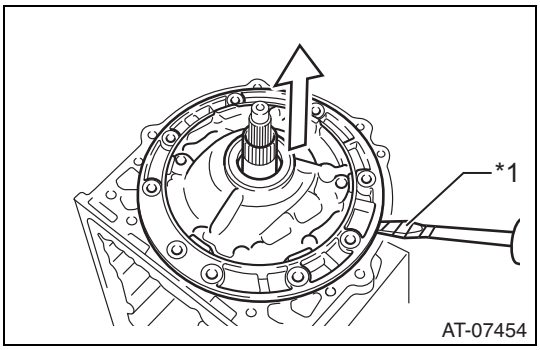

    (2) Use a flat tip screwdriver to remove the oil pump ASSY from the automatic transmission case SUB-ASSY.

Captions in illustration

*1	Protective tape

    CAUTION:
    Be careful not to damage the oil pump ASSY and automatic transmission case SUB-ASSY.
    NOTE:
    Wrap the tip of a flat tip screwdriver with tape before using it.

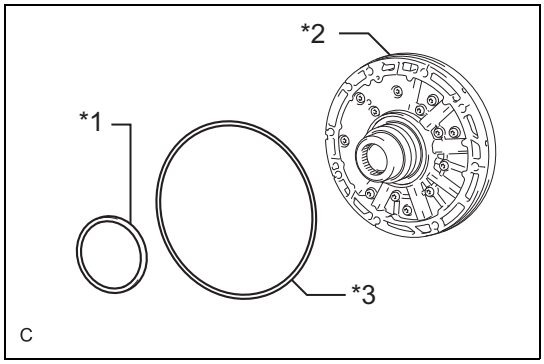

    (3) Remove No.1 thrust bearing race from the oil pump ASSY.

Captions in illustration

*1	No.1 thrust bearing race
*2	Oil pump ASSY
*3	O-ring

    (4) Remove the O-ring from the oil pump ASSY.

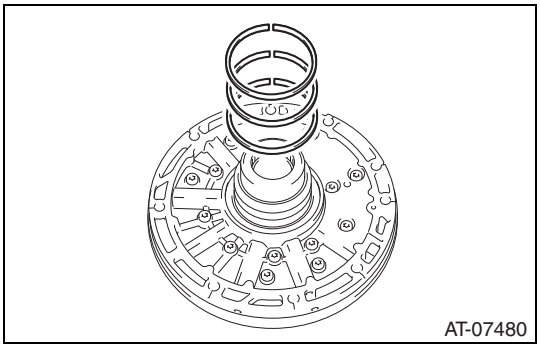

    (5) Remove the 3 oil seal rings from the oil pump.

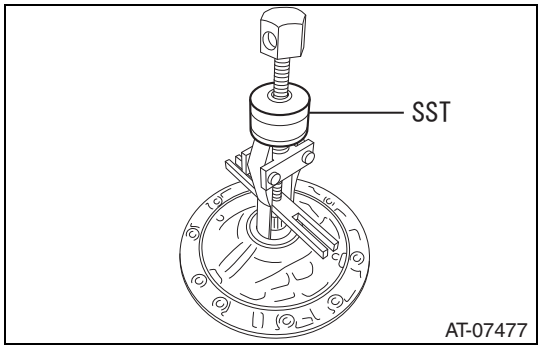

(6) Use the SST to remove the oil seal from the oil pump.
SST 398527700

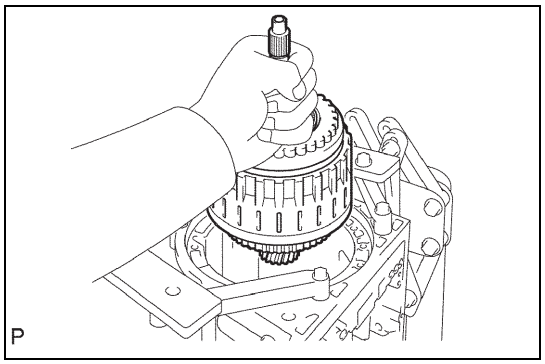

32. Removal of clutch drum & input shaft ASSY
(1) Remove the clutch drum and input shaft ASSY from the automatic transmission case SUB-ASSY.

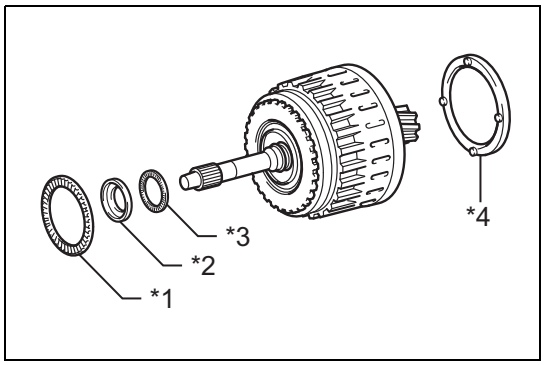

(2) Remove the clutch drum thrust washer, thrust needle roller bearing, input shaft front thrust bearing race, and input shaft front thrust needle roller bearing from the clutch drum & input shaft ASSY.

Captions in illustration

*1	Thrust needle roller bearing
*2	Input shaft front thrust bearing race
*3	Input shaft front thrust needle roller bearing
*4	Clutch drum thrust washer

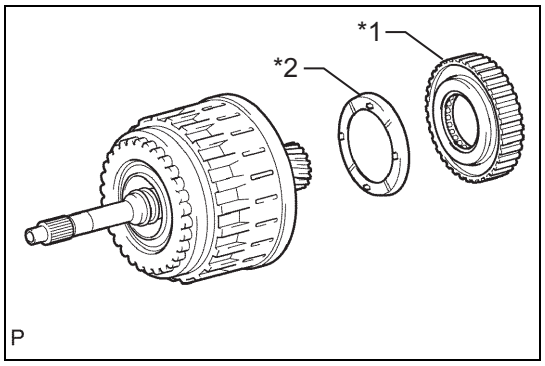

33. Removal of No.2 one-way clutch ASSY
(1) Remove the No.2 one-way clutch ASSY and input shaft clutch drum thrust washer from the clutch drum & input shaft ASSY.

Captions in illustration

*1	No.2 one-way clutch ASSY
*2	Input shaft clutch drum thrust washer

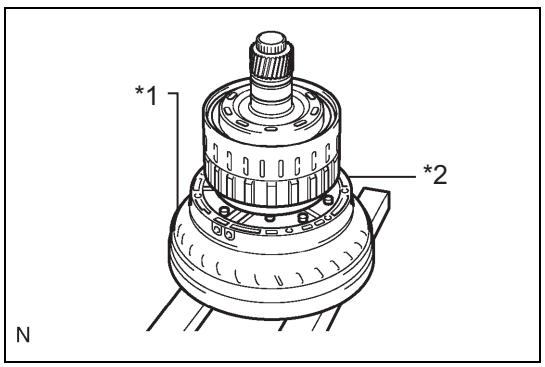

34. Support clutch drum & input shaft ASSY
(1) Place the oil pump ASSY on the torque converter ASSY, then place the clutch drum & input shaft ASSY on the oil pump ASSY.

Captions in illustration

*1	Torque converter ASSY
*2	Oil pump ASSY

AT

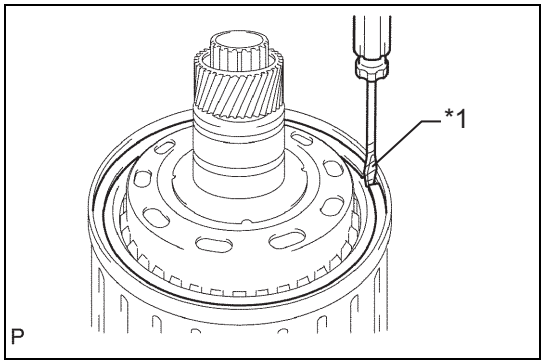

35. Removal of reverse clutch hub SUB-ASSY
    (1) Use a flat tip screwdriver to remove the snap ring from the reverse clutch piston SUB-ASSY.

Captions in illustration

*1	Protective tape

CAUTION:
Be careful not to damage the reverse clutch piston SUB-ASSY.
NOTE:
Wrap the tip of a flat tip screwdriver with tape before using it.

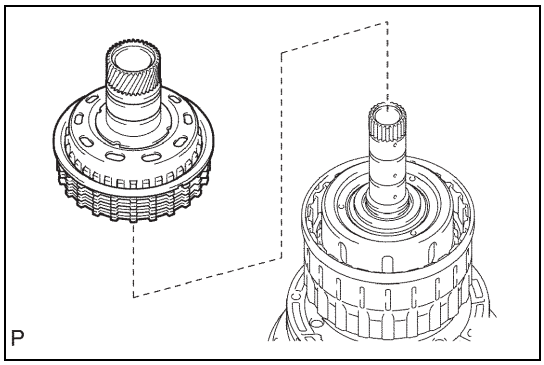

(2) Remove the reverse clutch hub SUB-ASSY from the reverse clutch drum SUB-ASSY.

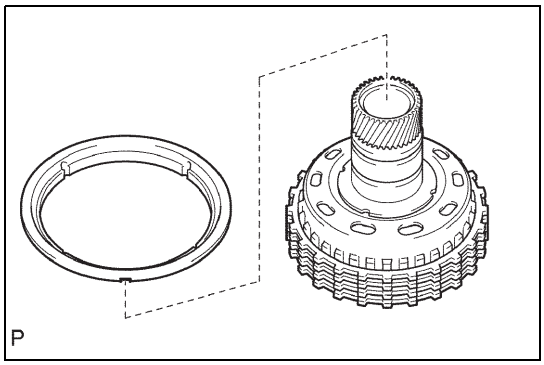

36. Removal of reverse clutch reaction sleeve
    (1) Remove the reverse clutch reaction sleeve from the reverse clutch hub SUB-ASSY.

AT

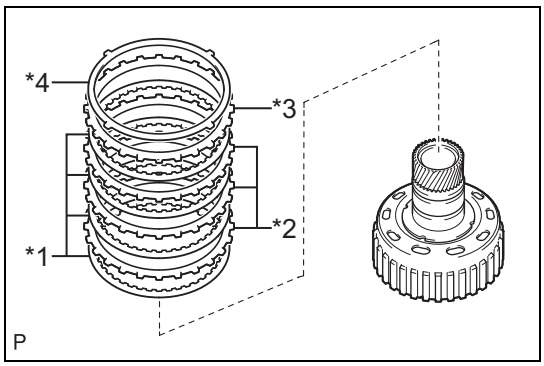

37. Removal of No.3 clutch disc
    (1) Remove the clutch cushion plate, reverse clutch flange, 4 No.3 clutch discs, and 3 No.3 clutch plates from the reverse clutch hub SUB-ASSY.

Captions in illustration

*1	No.3 clutch disc
*2	No.3 clutch plate
*3	Reverse clutch flange
*4	Clutch cushion plate

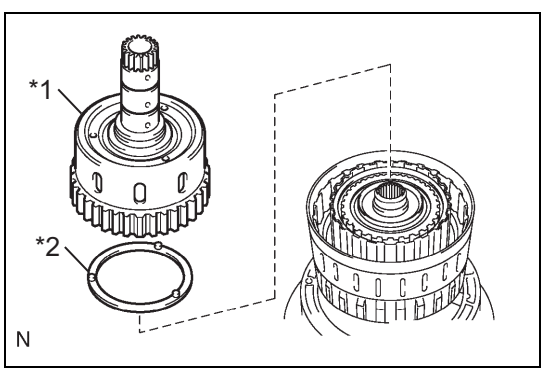

38. Removal of forward clutch hub SUB-ASSY
    (1) Remove the forward clutch hub SUB-ASSY and No.3 clutch hub thrust washer from the reverse clutch drum SUB-ASSY.

Captions in illustration

*1	Forward clutch hub SUB-ASSY
*2	No.3 clutch hub thrust washer

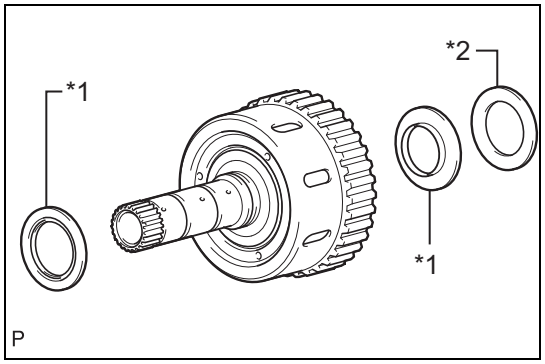

(2) Remove the 2 thrust needle roller bearings and No.2 thrust bearing race from the forward clutch hub ASSY.

Captions in illustration

*1	Thrust needle roller bearing
*2	No.2 thrust bearing race

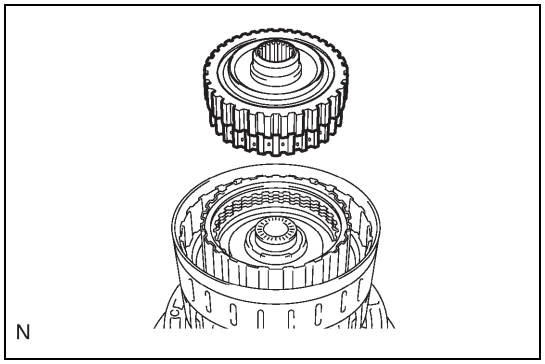

39. Removal of coast clutch hub SUB-ASSY

(1) Remove the coast clutch hub SUB-ASSY from the reverse clutch drum SUB-ASSY.

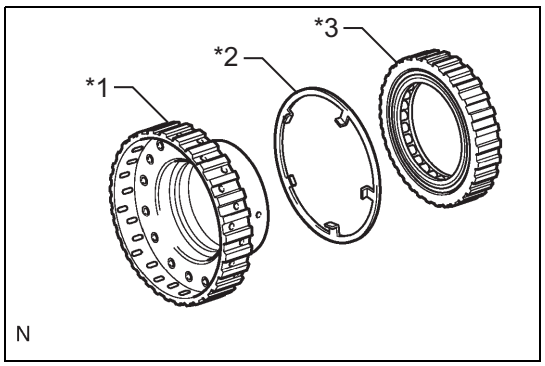

40. Removal of No.4 one-way clutch ASSY

(1) Remove the No.4 one-way clutch ASSY and No.2 clutch hub thrust washer from the coast clutch hub ASSY.

Captions in illustration

*1	Coast clutch hub SUB-ASSY
*2	No.2 clutch hub thrust washer
*3	No.4 one-way clutch ASSY

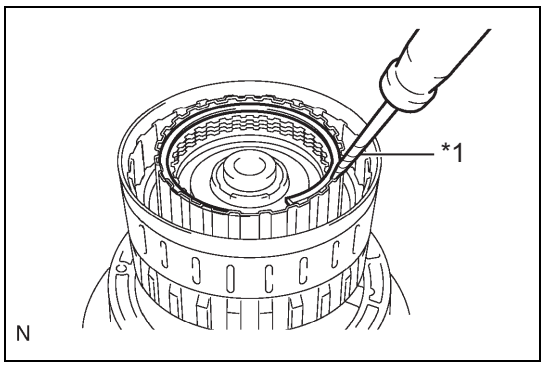

41. Removal of No.1 clutch disc (forward clutch disc)

(1) Use a flat tip screwdriver to remove the snap ring.

Captions in illustration

*1	Protective tape

CAUTION:
Be careful not to damage the input shaft.
NOTE:
Wrap the tip of a flat tip screwdriver with tape before using it.

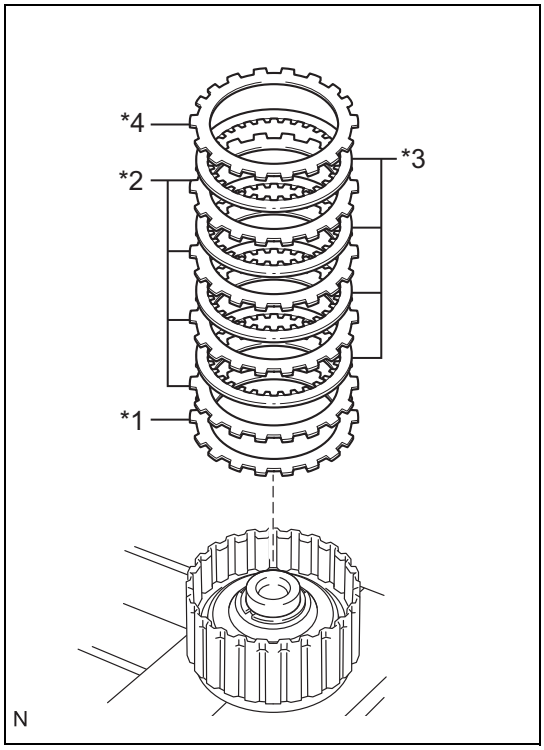

(2) Remove the forward clutch flange, 4 No.1 clutch discs, 4 No.1 clutch plates, and clutch cushion plate from the input shaft.

Captions in illustration

*1	Clutch cushion plate
*2	No.1 clutch plate
*3	No.1 clutch disc
*4	Forward clutch flange

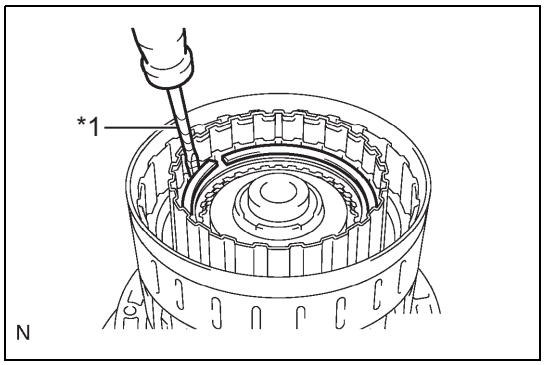

42. Removal of No.4 clutch disc (coast clutch disc)

(1) Use a flat tip screwdriver to remove the snap ring.

Captions in illustration

*1	Protective tape

CAUTION:
Be careful not to damage the forward clutch piston SUB-ASSY.
NOTE:
Wrap the tip of a flat tip screwdriver with tape before using it.

AT

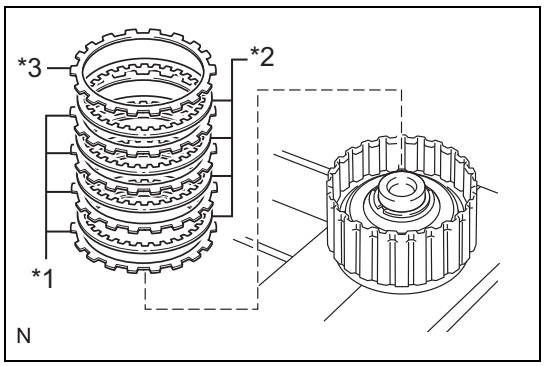

(2) Remove the coast clutch flange, 4 No.4 clutch discs, 4 No.4 clutch plates from the forward clutch piston SUB-ASSY.

Captions in illustration

*1	No.4 clutch plate
*2	No.4 clutch disc
*3	Coast clutch flange

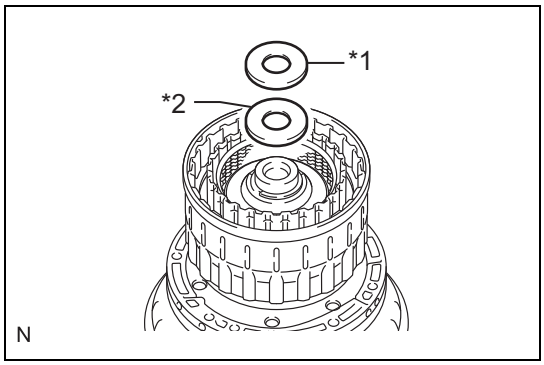

43. Removal of input shaft

(1) Remove the thrust needle roller bearing and input shaft rear thrust bearing race from the input shaft.

Captions in illustration

*1	Thrust needle roller bearing
*2	Input shaft rear thrust bearing race

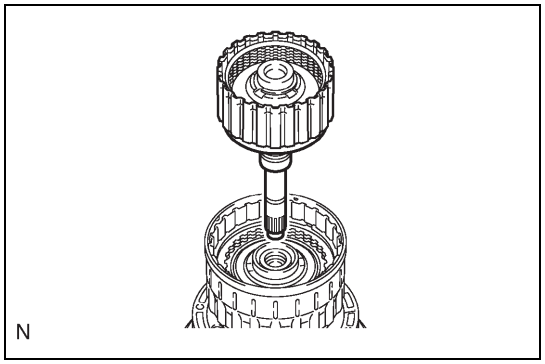

(2) Remove the input shaft from the reverse clutch drum SUB-ASSY.

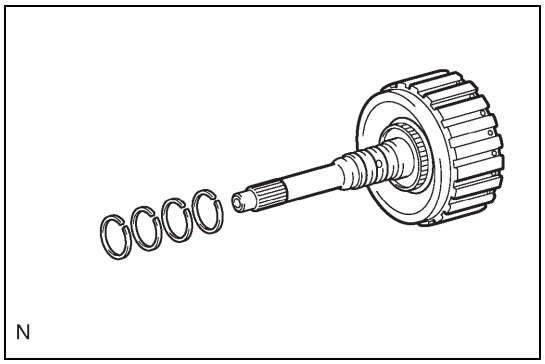

44. Removal of clutch drum oil seal ring
    (1) Remove the 4 clutch drum oil seal rings from the input shaft.

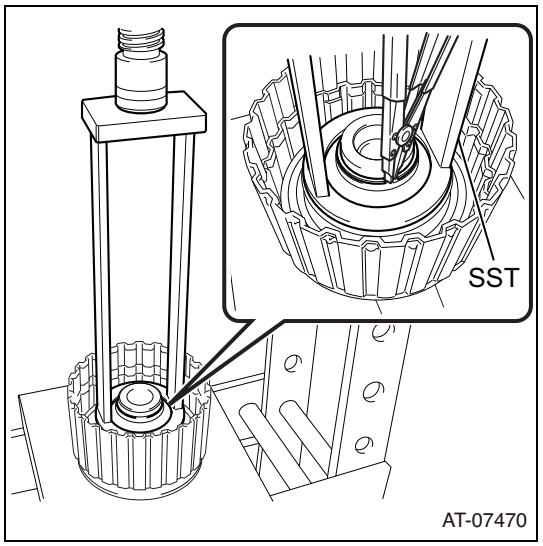

45. Removal of No.1 clutch balancer
    (1) Place the SST on the No.1 clutch balancer and press the forward clutch return spring SUB-ASSY using a press.
        SST 09387-00110
    (2) Remove the snap ring.

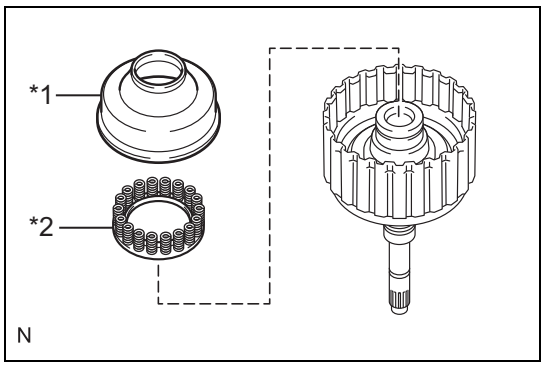

(3) Remove No.1 clutch balancer and forward clutch return spring SUB-ASSY from the input shaft.

Captions in illustration

*1	No.1 clutch balancer
*2	Forward clutch return spring SUB-ASSY

AT

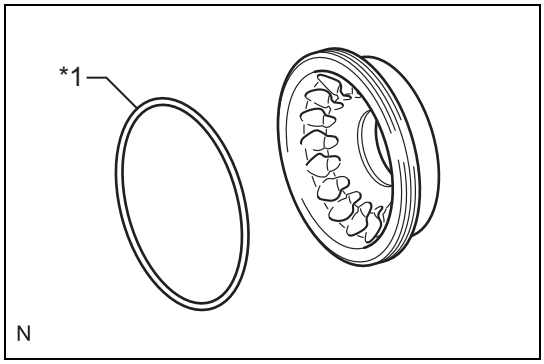

(4) Remove the D-ring from the No.1 clutch balancer.

Captions in illustration

*1	D-ring

46. Removal of forward clutch piston SUB-ASSY

(1) Hold the forward clutch piston SUB-ASSY and blow compressed air (392 kPa {4.0 kgf/cm^2, 57 psi}) to the input shaft, then remove the forward clutch piston SUB-ASSY.

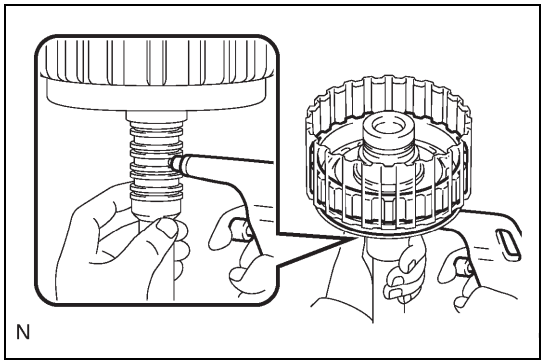

(2) Remove the coast clutch piston from the forward clutch piston SUB-ASSY.

Captions in illustration

*1	Coast clutch piston
*2	Forward clutch piston SUB-ASSY

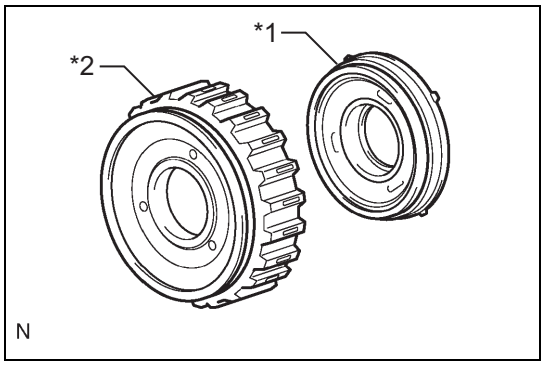

(3) Remove the O-ring from the input shaft.

Captions in illustration

*1	O-ring

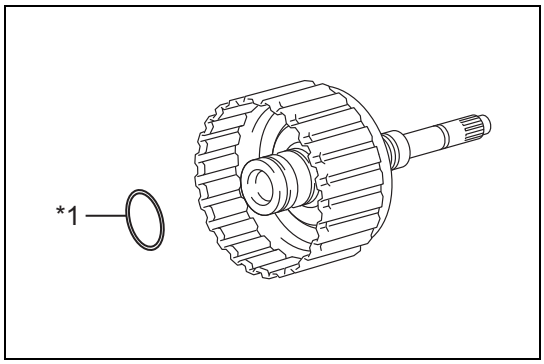

47. Removal of reverse clutch flange

(1) Remove the reverse clutch flange from the reverse clutch drum SUB-ASSY.

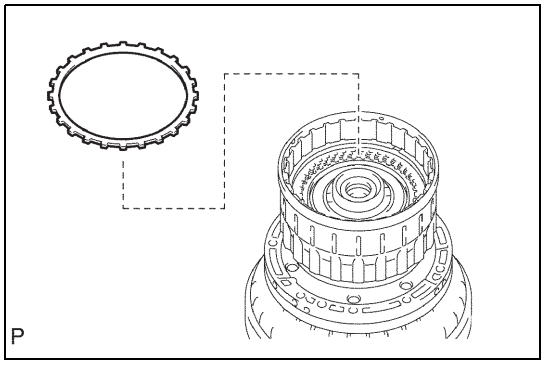

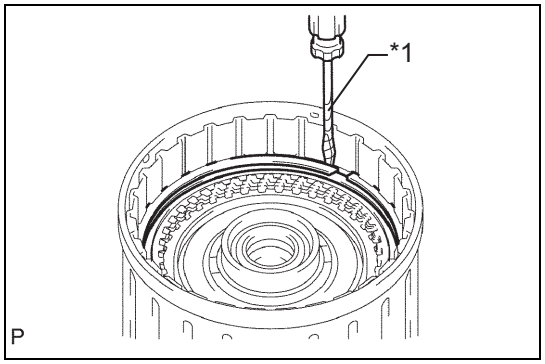

48. Removal of No.2 clutch disc (direct clutch disc)
    (1) Use a flat tip screwdriver to remove the 2 snap rings from the reverse clutch drum SUB-ASSY.

Captions in illustration

*1	Protective tape

CAUTION:
Be careful not to damage the reverse clutch drum SUB-ASSY.
NOTE:
Wrap the tip of a flat tip screwdriver with tape before using it.

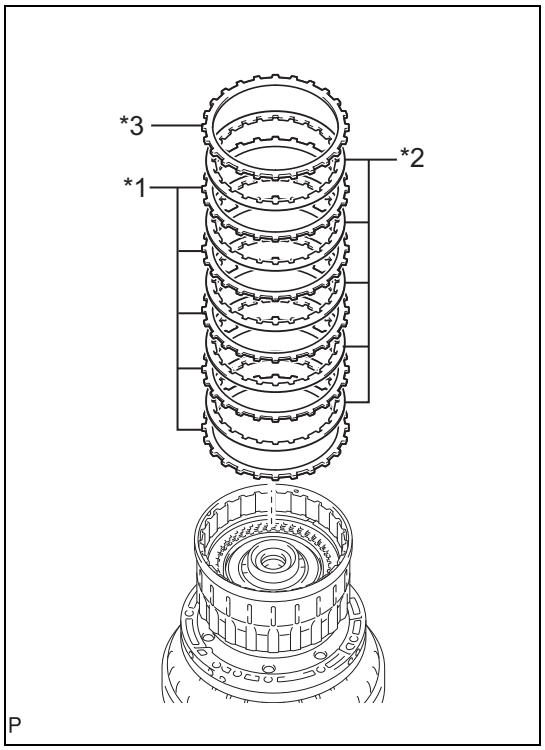

    (2) Remove the direct clutch flange, 5 No.2 clutch discs, 5 No.2 clutch plates from the reverse clutch drum SUB-ASSY.

Captions in illustration

*1	No.2 clutch plate
*2	No.2 clutch disc
*3	Direct clutch flange

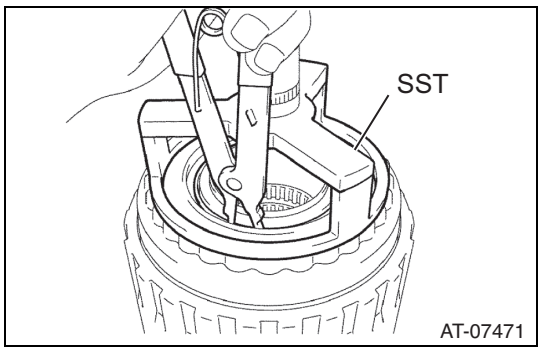

49. Removal of No.3 clutch balancer
    (1) Place the SST on the No.3 clutch balancer and press the reverse clutch return spring SUB-ASSY using a press.
        SST 09387-00070
    (2) Remove the snap ring.
    (3) Remove the No.3 clutch balancer.

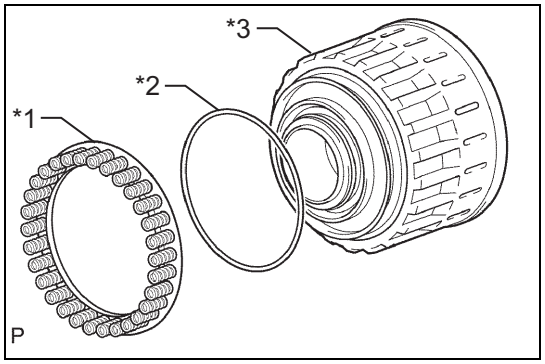

50. Removal of reverse clutch return spring SUB-ASSY
    (1) Remove the reverse clutch return spring SUB-ASSY and O-ring from the reverse clutch piston SUB-ASSY.

Captions in illustration

*1	Reverse clutch return spring SUB-ASSY
*2	O-ring
*3	Reverse clutch piston SUB-ASSY

AT

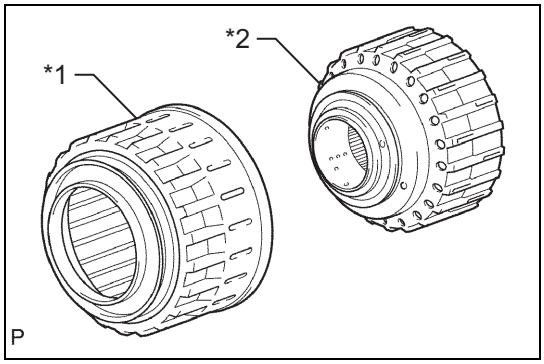

51. Removal of reverse clutch piston SUB-ASSY
    (1) Remove the reverse clutch piston SUB-ASSY from the reverse clutch drum SUB-ASSY.

Captions in illustration

*1	Reverse clutch piston SUB-ASSY
*2	Reverse clutch drum SUB-ASSY

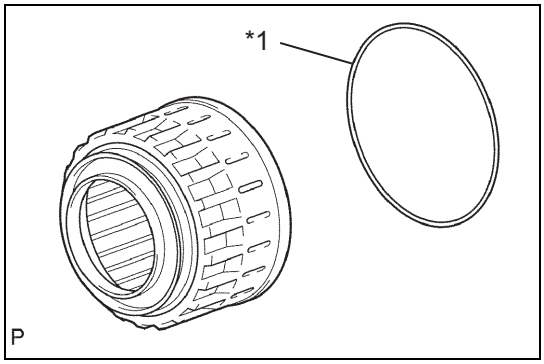

    (2) Remove the O-ring from the reverse clutch piston SUB-ASSY.

Captions in illustration

*1	O-ring

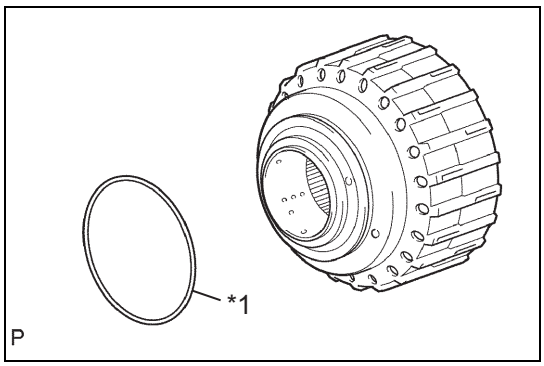

    (3) Remove the O-ring from the reverse clutch drum SUB-ASSY.

Captions in illustration

*1	O-ring

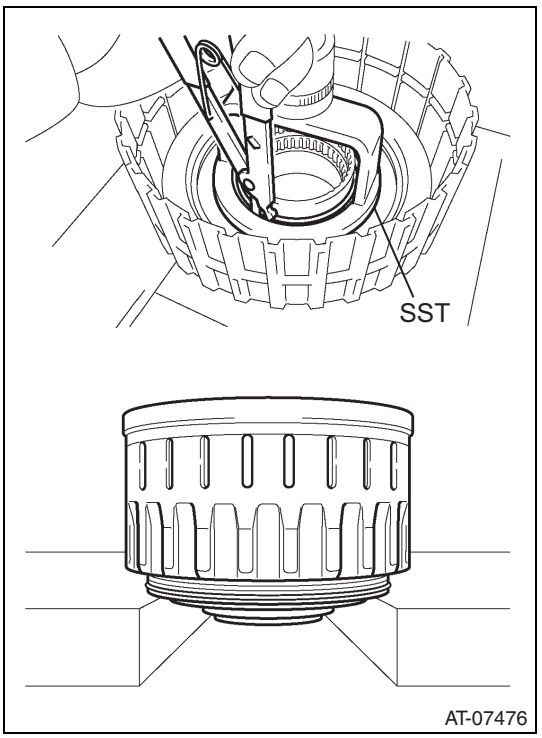

52. Removal of direct clutch piston SUB-ASSY
    (1) Place the SST on the No.2 clutch balancer and press the direct clutch return spring SUB-ASSY using a press.
        SST 09320-89010
    (2) Remove the snap ring.

AT

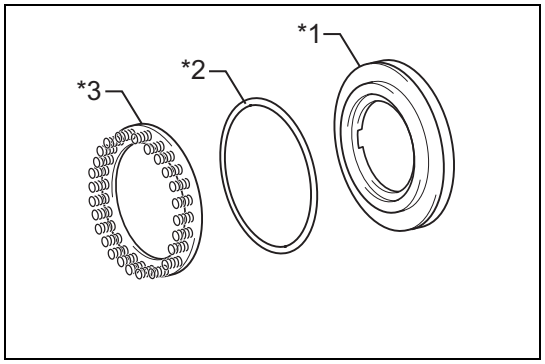

(3) Remove the No.2 clutch balancer and direct clutch return spring SUB-ASSY.

Captions in illustration

*1	No.2 clutch balancer
*2	O-ring
*3	Direct clutch return spring SUB-ASSY

(4) Remove the O-ring from the No.2 clutch balancer.

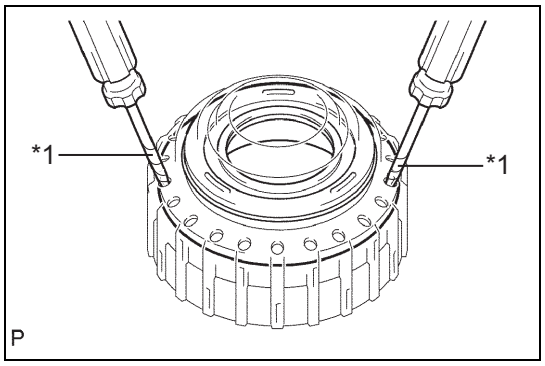

(5) Use 2 flat tip screwdrivers to remove the direct clutch piston SUB-ASSY from the reverse clutch drum SUB-ASSY.

Captions in illustration

*1	Protective tape

CAUTION:
Be careful not to damage the direct clutch piston SUB-ASSY.
NOTE:
Wrap the tip of a flat tip screwdriver with tape before using it.

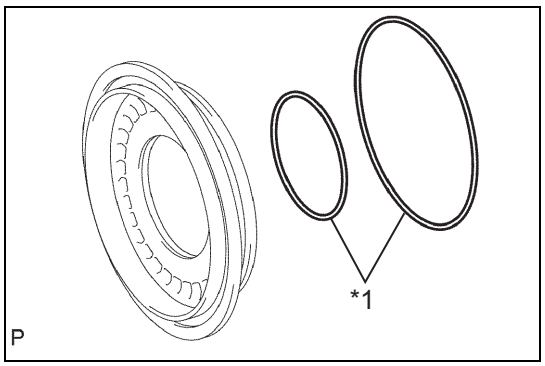

(6) Remove 2 O-rings from the direct clutch piston SUB-ASSY.

Captions in illustration

*1	O-ring

AT

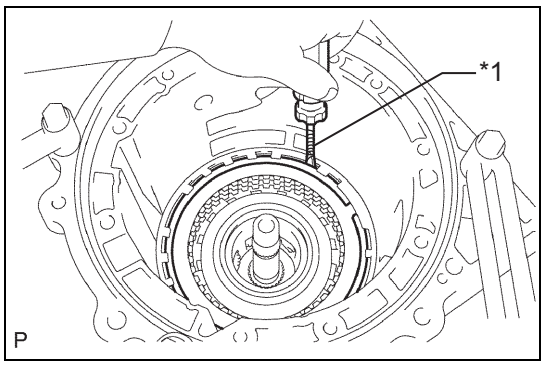

53. Removal of No.3 brake disc

(1) Use a flat tip screwdriver to remove the snap ring from the automatic transmission case SUB-ASSY.

Captions in illustration

*1	Protective tape

CAUTION:
Be careful not to damage the automatic transmission case SUB-ASSY.
NOTE:
Wrap the tip of a flat tip screwdriver with tape before using it.

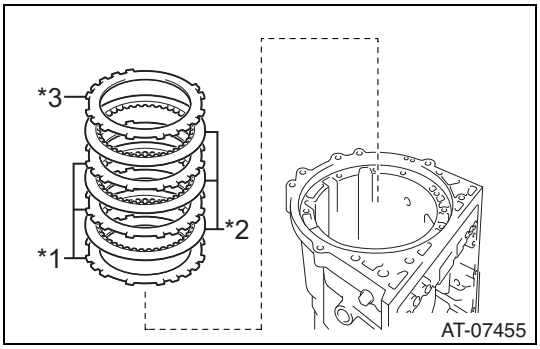

(2) Remove the No.3 brake flange, 3 No.3 brake discs, and 3 No.3 brake plates from the automatic transmission case SUB-ASSY.

Captions in illustration

*1	No.3 brake plate
*2	No.3 brake disc
*3	No.3 brake flange

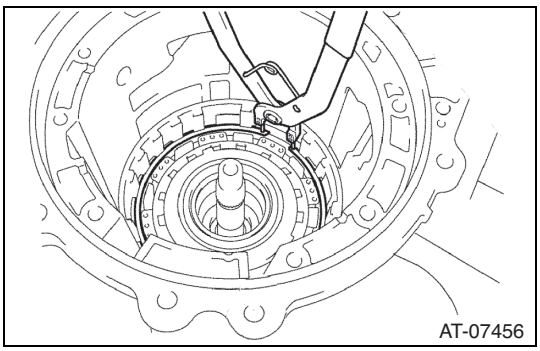

54. Removal of No.3 brake cylinder

(1) Remove the snap ring from the automatic transmission case SUB-ASSY.

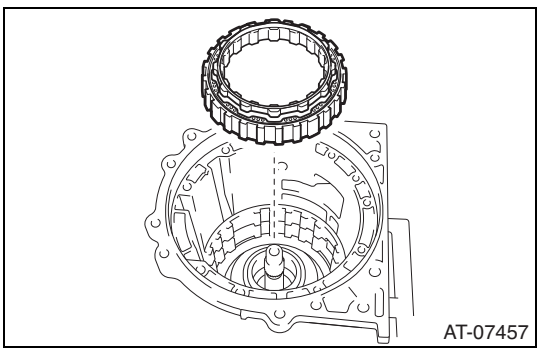

(2) Remove the No.3 brake cylinder from the automatic transmission case SUB-ASSY.

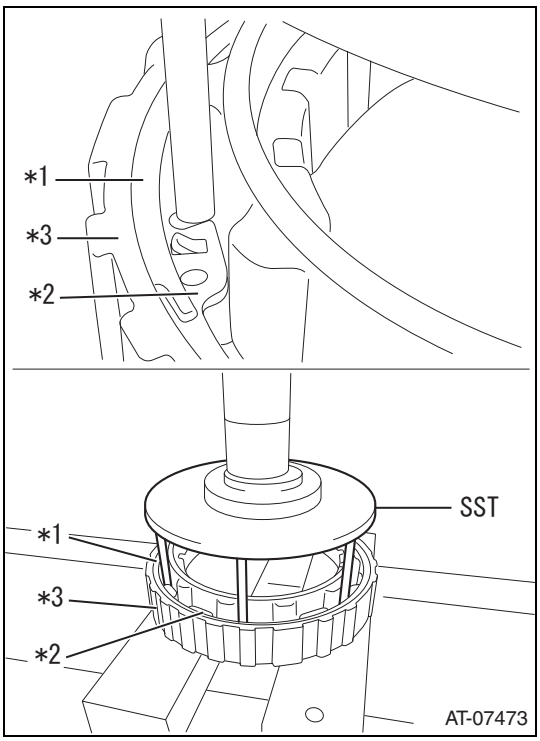

55. Removal of No.3 brake piston

(1) Use a flat tip screwdriver and press to remove the snap ring and No.3 brake piston return spring SUB-ASSY from the No.3 brake cylinder.

Captions in illustration

*1	Snap ring
*2	No.3 brake piston return spring SUB-ASSY
*3	No.3 brake cylinder

SST 18762AA030

CAUTION:

- Be careful not to damage the No.3 brake cylinder.
- Keep the foot of SST from standing on the protrusion of the piston return spring SUB-ASSY.

NOTE:

Wrap the tip of a flat tip screwdriver with tape before using it.

AT

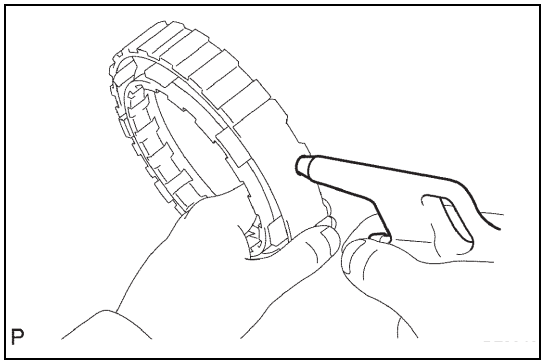

(2) Hold the No.3 second brake piston and blow compressed air (392 kPa {4.0 kgf/cm^2, 57 psi}) to the No.3 brake cylinder, then remove the No.3 brake piston.

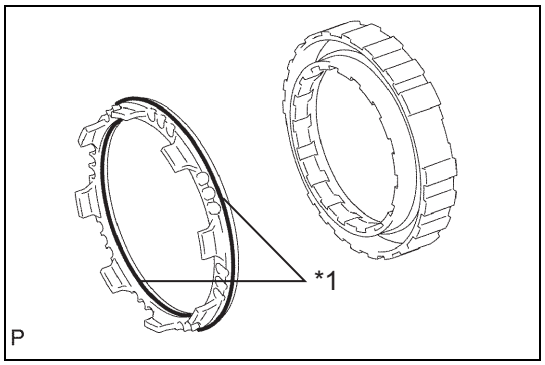

(3) Remove 2 O-rings from the No.3 brake piston.

Captions in illustration

*1	O-ring

56. Removal of one-way clutch ASSY

(1) Remove the one-way clutch ASSY and No.1 planetary carrier thrust washer from the automatic transmission case SUB-ASSY.

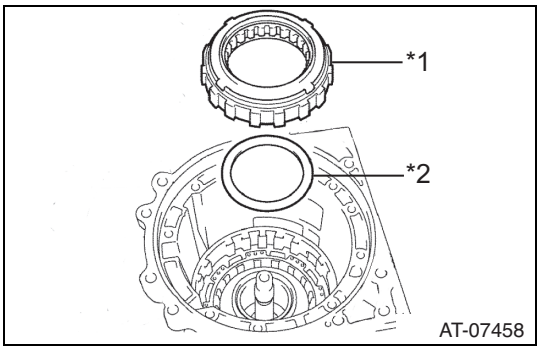

Captions in illustration

*1	One-way clutch ASSY
*2	No.1 planetary carrier thrust washer

57. Removal of front planetary gear ASSY

(1) Remove the front planetary gear ASSY and one-way clutch inner race SUB-ASSY from the automatic transmission case SUB-ASSY.

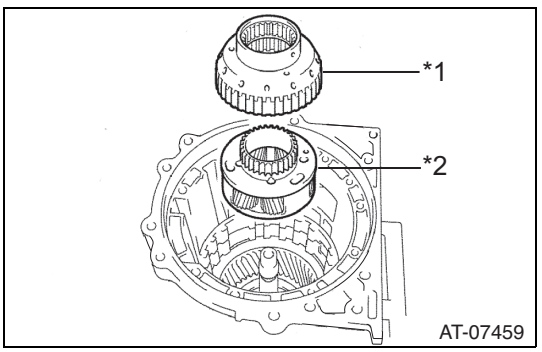

Captions in illustration

*1	One-way clutch inner race SUB-ASSY
*2	Front planetary gear ASSY

(2) Remove the front planetary flange rear thrust bearing race, front planetary flange thrust needle roller bearing, and No.2 planetary carrier thrust washer from the automatic transmission case SUB-ASSY.

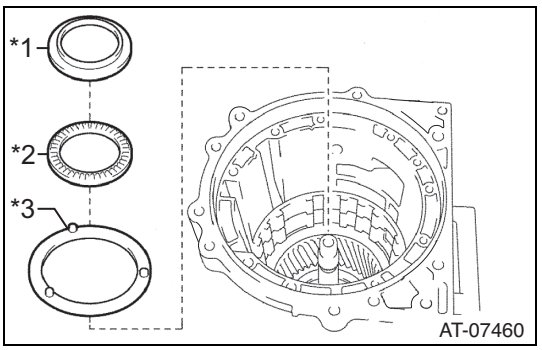

Captions in illustration

*1	Front planetary flange rear thrust bearing race
*2	Front planetary flange thrust needle roller bearing
*3	No.2 planetary carrier thrust washer

AT

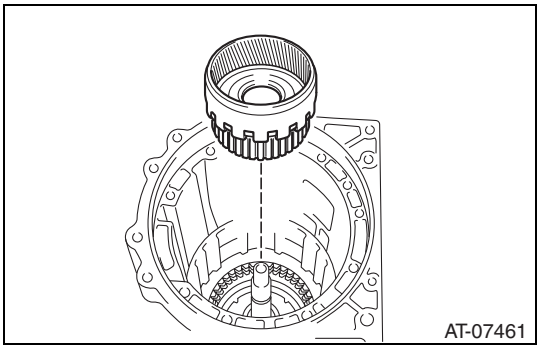

58. Removal of front planetary ring gear
    (1) Remove the front planetary ring gear from the automatic transmission case SUB-ASSY.

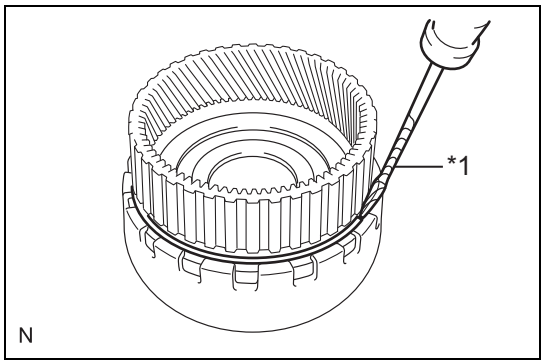

59. Removal of center planetary ring gear
    (1) Use a flat tip screwdriver to remove the snap ring.

Captions in illustration

*1	Protective tape

CAUTION:
Be careful not to damage the front planetary ring gear.
NOTE:
Wrap the tip of a flat tip screwdriver with tape before using it.

    (2) Remove the center planetary ring gear from the front planetary ring gear.

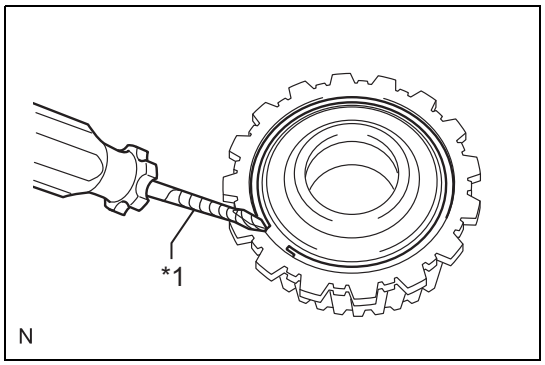

    (3) Use a flat tip screwdriver to remove the snap ring.

Captions in illustration

*1	Protective tape

CAUTION:
Be careful not to damage the center planetary ring gear.
NOTE:
Wrap the tip of a flat tip screwdriver with tape before using it.

    (4) Remove the front planetary ring gear flange SUB-ASSY from the center planetary ring gear.

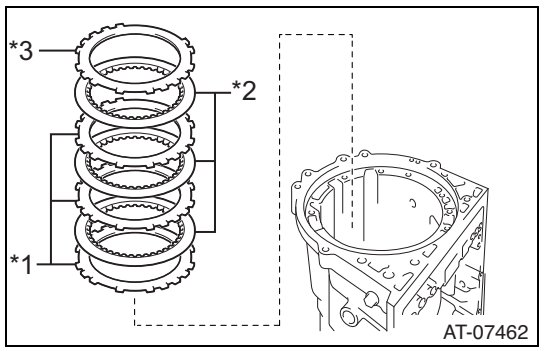

60. Removal of No.1 brake disc
    (1) Remove the No.1 brake flange, 3 No.1 brake discs, 3 No.1 brake plates from the automatic transmission case SUB-ASSY.

Captions in illustration

*1	No.1 brake plate
*2	No.1 brake disc
*3	No.1 brake flange

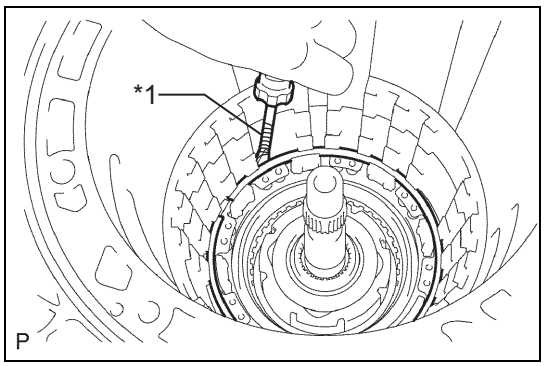

61. Removal of brake piston return spring SUB-ASSY
    (1) Use a flat tip screwdriver to remove the snap ring from the automatic transmission case SUB-ASSY.

Captions in illustration

*1	Protective tape

CAUTION:
Be careful not to damage the automatic transmission case SUB-ASSY.
NOTE:
Wrap the tip of a flat tip screwdriver with tape before using it.

AT

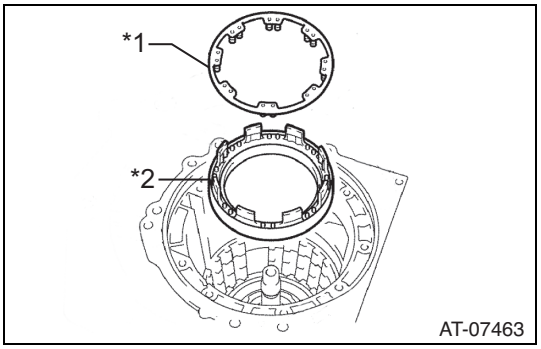

(2) Remove the brake piston return spring SUB-ASSY and No.1 brake cylinder from the automatic transmission case SUB-ASSY.

Captions in illustration

*1	Brake piston return spring SUB-ASSY
*2	No.1 brake cylinder

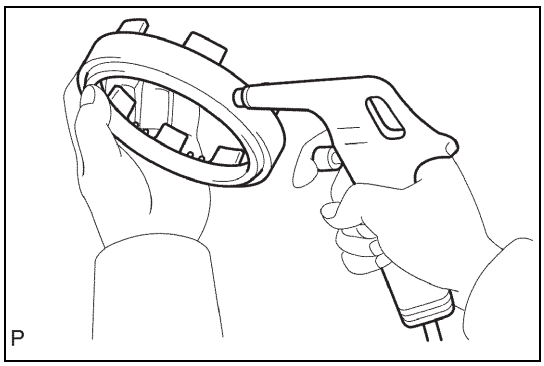

62. Removal of No.1 brake piston
    (1) Hold the No.1 brake piston and blow compressed air (392 kPa {4.0 kgf/cm^2, 57 psi}) to the No.1 brake cylinder, then remove the No.1 brake piston.
    NOTE:
    If the piston does not jump out by compressed air, use needle nose pliers to pick the piston up and take it out.
    (2) Remove 2 O-rings from the No.1 brake piston.

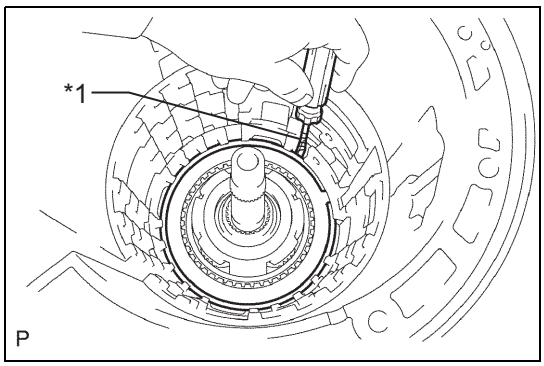

63. Removal of No.2 brake disc
    (1) Use a flat tip screwdriver to remove the snap ring from the automatic transmission case SUB-ASSY.

Captions in illustration

*1	Protective tape

CAUTION:
Be careful not to damage the automatic transmission case SUB-ASSY.
NOTE:
Wrap the tip of a flat tip screwdriver with tape before using it.

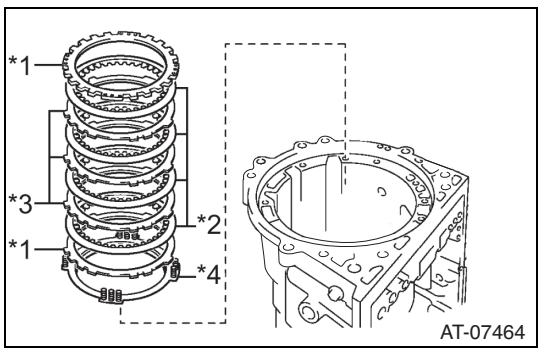

(2) Remove 2 No.2 brake flanges, 4 No.2 brake discs, 3 No.2 brake plates, and No.2 brake piston return spring SUB-ASSY from the automatic transmission case SUB-ASSY.

Captions in illustration

*1	No.2 brake flange
*2	No.2 brake disc
*3	No.2 brake plate
*4	No.2 brake piston return spring SUB-ASSY

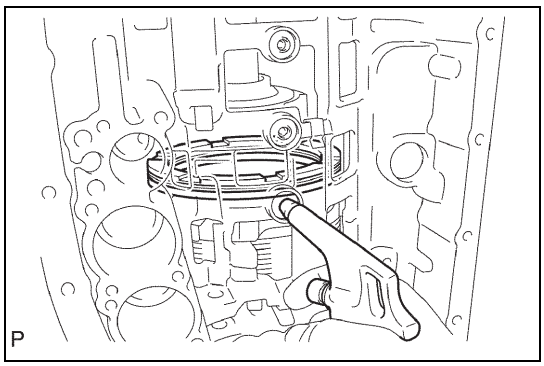

64. Removal of No.2 brake piston
    (1) Hold the No.2 brake piston and blow compressed air (392 kPa {4.0 kgf/cm^2, 57 psi}) to the transmission case, then remove the No.2 brake piston and No.2 brake cylinder.
    NOTE:
    If the piston does not jump out by compressed air, use needle nose pliers to pick the piston up and take it out.
    (2) Remove the No.2 brake piston from the No.2 brake cylinder.
    (3) Remove the two O-rings from the No.2 brake piston.

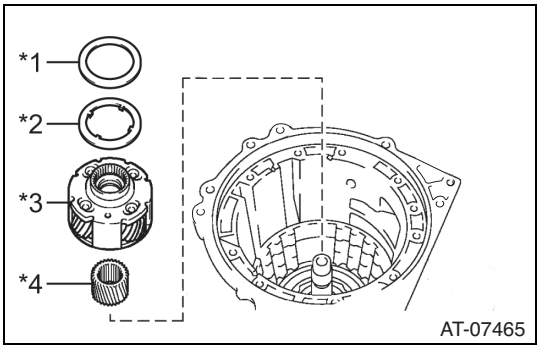

65. Removal of center planetary gear ASSY
    (1) Remove the center planetary gear ASSY, planetary sun gear, thrust needle roller bearing, and No.4 thrust bearing race from the automatic transmission case SUB-ASSY.

Captions in illustration

*1	Thrust needle roller bearing
*2	No.4 thrust bearing race
*3	Center planetary gear ASSY
*4	Planetary sun gear

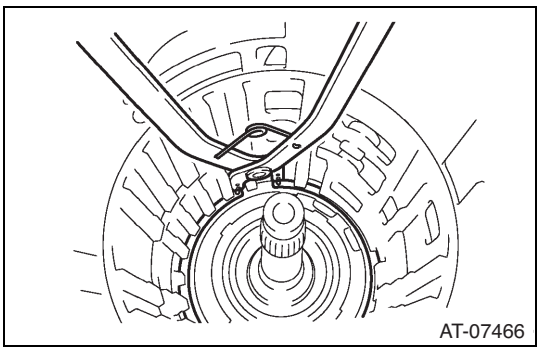

66. Removal of intermediate shaft
    (1) Remove the snap ring from the automatic transmission case SUB-ASSY.

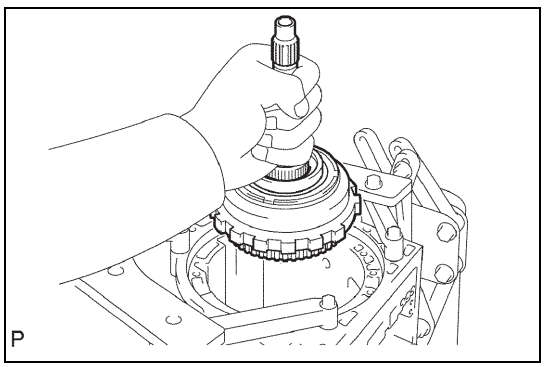

    (2) Remove the intermediate shaft together with the No.3 one-way clutch ASSY from the automatic transmission case SUB-ASSY.

AT

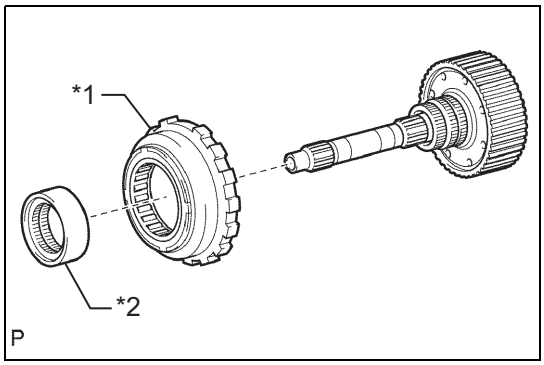

67. Removal of No.3 one-way clutch ASSY
    (1) Remove the No.3 one-way clutch ASSY and one-way clutch inner race from the intermediate shaft.

Captions in illustration

*1	No.3 one-way clutch ASSY
*2	One-way clutch inner race

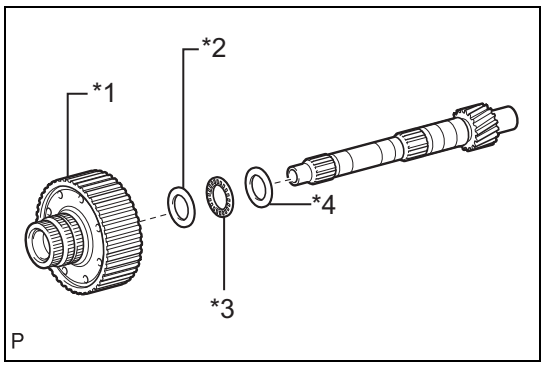

68. Removal of rear planetary ring gear flange SUB-ASSY
    (1) Remove the rear planetary ring gear flange SUB-ASSY, No.7 thrust bearing race, thrust needle roller bearing, and No.8 thrust bearing race from the intermediate shaft.

Captions in illustration

*1	Rear planetary ring gear flange SUB-ASSY
*2	No.7 thrust bearing race
*3	Thrust needle roller bearing
*4	No.8 thrust bearing race

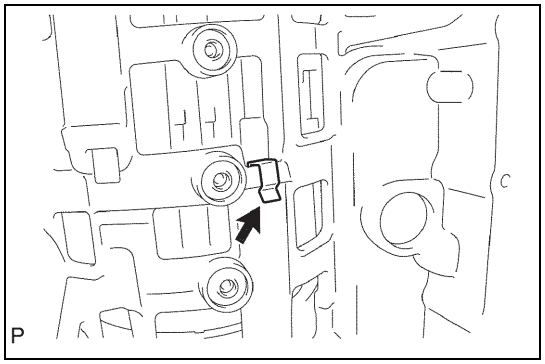

69. Removal of brake plate stopper spring
    (1) Remove the brake plate stopper spring from the automatic transmission case SUB-ASSY.

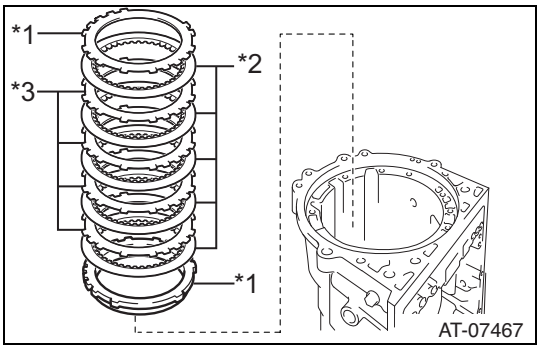

70. Removal of No.4 brake disc
    (1) Remove 2 No.4 brake flanges, 5 No.4 brake discs, 4 No.4 brake plates from the automatic transmission case SUB-ASSY.

Captions in illustration

*1	No.4 brake flange
*2	No.4 brake disc
*3	No.4 brake plate

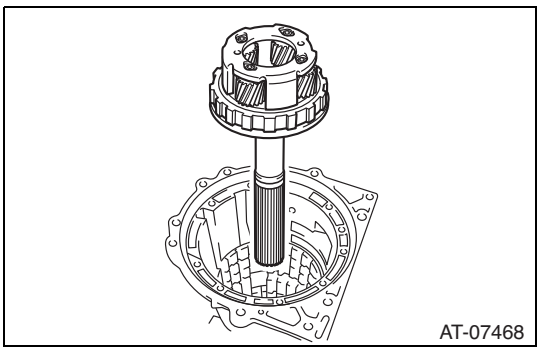

71. Removal of rear planetary gear ASSY
    (1) Remove the rear planetary gear ASSY from the automatic transmission case SUB-ASSY.

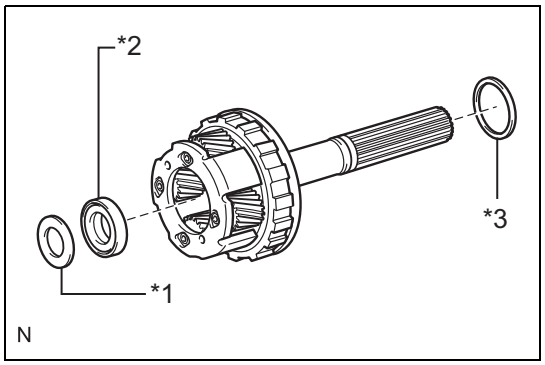

    (2) Remove the thrust bearing race, thrust needle roller bearing, and No.9 thrust bearing race from the rear planetary gear ASSY.

Captions in illustration

*1	Thrust bearing race
*2	Thrust needle roller bearing
*3	No.9 thrust bearing race

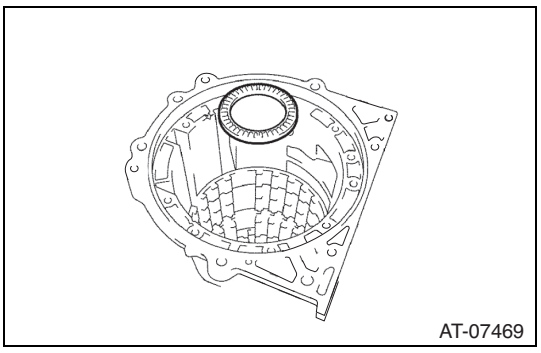

    (3) Remove the thrust needle roller bearing from the automatic transmission case SUB-ASSY.

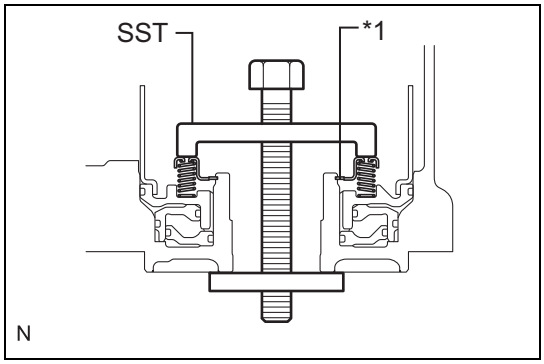

72. Removal of 1st & reverse brake return spring SUB-ASSY
    (1) Place the SST on the 1st & reverse brake return spring SUB-ASSY and press the 1st & reverse brake return spring SUB-ASSY.

Captions in illustration

*1	Snap ring

SST 09350-07050

(2) Remove the snap ring and 1st & reverse brake return spring SUB-ASSY.

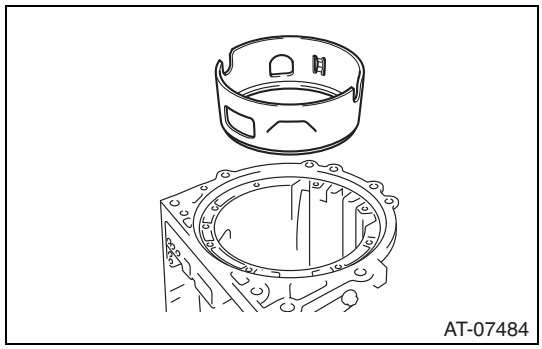

73. Removal of brake apply tube
    (1) Remove the brake apply tube from the automatic transmission case SUB-ASSY.

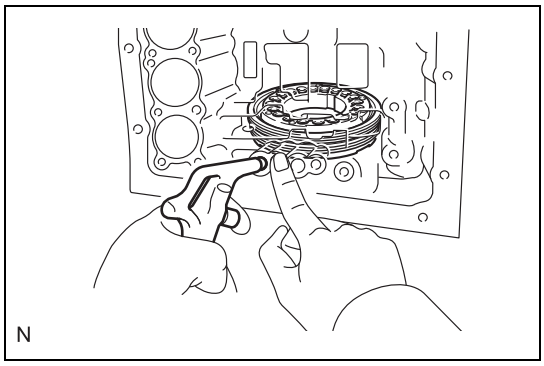

74. Removal of 1st & reverse brake piston
    (1) Hold the 1st & reverse brake piston and blow compressed air (392 kPa {4.0 kgf/cm^2, 57 psi}) to the transmission case, then remove the 1st & reverse brake piston.
    NOTE:
    If the piston does not jump out by compressed air, use needle nose pliers to pick the piston up and take it out.
    (2) Remove the O-ring from the 1st & reverse brake piston.

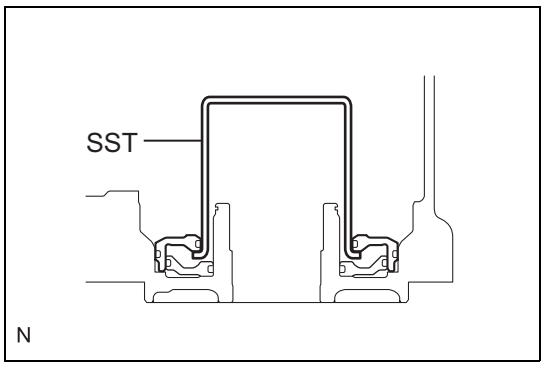

75. Removal of brake reaction sleeve
    (1) Use the SST to remove the brake reaction sleeve from the automatic transmission case SUB-ASSY.
    SST 09350-07080
    (2) Remove 2 O-rings from the brake reaction sleeve.

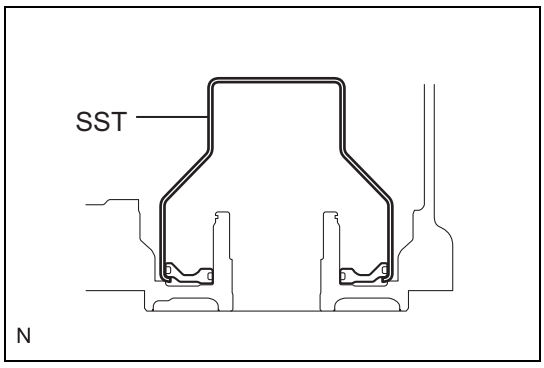

76. Removal of No.4 brake piston
    (1) Use the SST to remove the No.4 brake piston from the automatic transmission case SUB-ASSY.
    SST 09350-07090
    (2) Remove 2 O-rings from the No.4 brake piston.

AT

Unit inspection

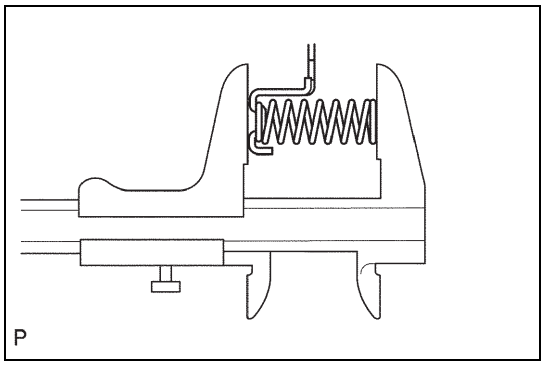

1. Check of 1st & reverse brake return spring SUB-ASSY
   (1) Measure the free length of the spring including the spring seat.
   Normal free length: 23.74mm {0.935in}
   If the measured free length is shorter than the normal free length, replace the 1st & reverse brake return spring SUB-ASSY.

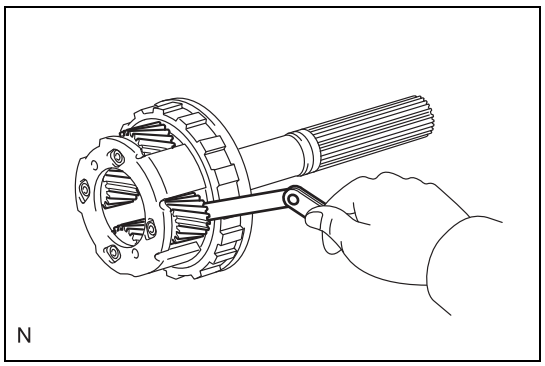

2. Check of rear planetary gear ASSY
   (1) Use a feeler gauge to measure the rear planetary gear pinion thrust clearance.
   Normal clearance: 0.2 to 0.6 mm {0.00788 to 0.0236 in}
   If the measured clearance is larger than the normal clearance, replace the rear planetary gear ASSY.

AT

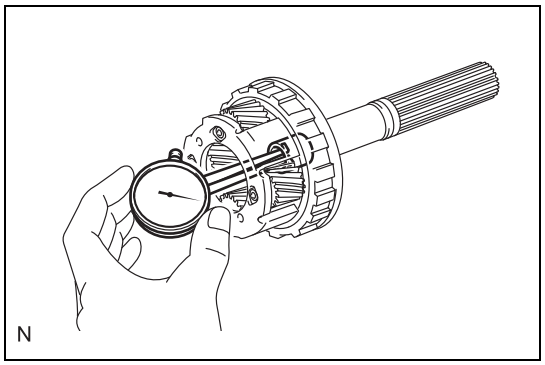

   (2) Measure the inner diameter of the rear planetary gear bushing.
   Normal inner diameter: 18.025mm {0.710in}
   If the measured inner diameter is larger than the normal inner diameter, replace the rear planetary gear ASSY.

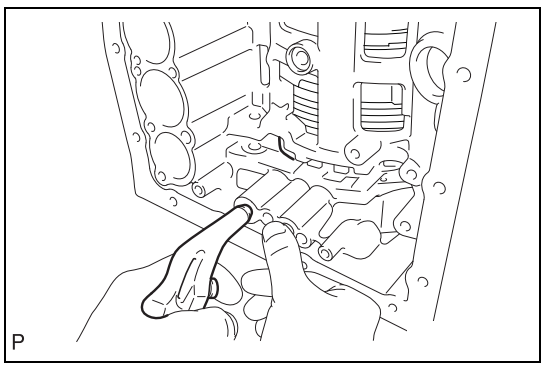

3. Check of No.4 brake pack clearance
   (1) Apply compressed air (392 kPa {4.0 kgf/cm^2, 57 psi}), release the air gun, and then check that the 1st & reverse brake piston moves smoothly.

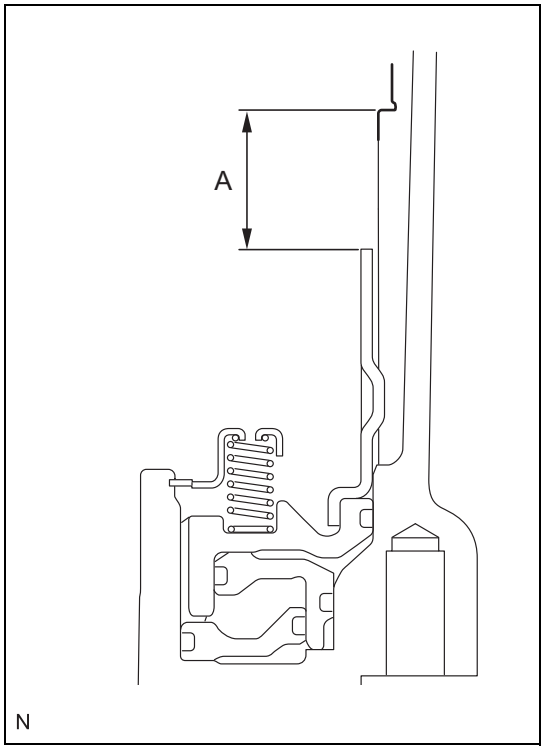

(2) Measure the height difference (dimension A) between the upper surface of the brake apply tube and the No.4 brake flange contact surface at both ends of the diameter of the 1st & reverse brake piston, and calculate the average.
CAUTION:
The 1st & reverse brake piston must be installed to the end face of the transmission case securely.
NOTE:
Dimension A = 23.32 to 24.18 mm {0.919 to 0.951 in}

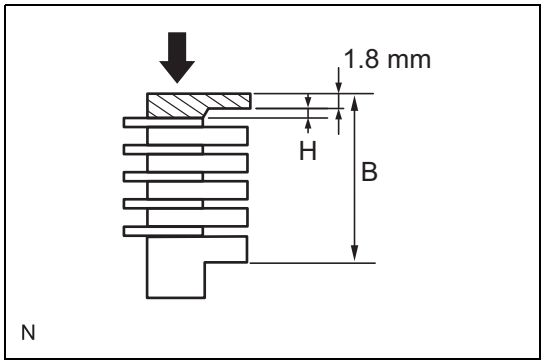

(3) While applying a pressure of 4.9 N {0.5 kgf, 1.1 lbf} or less, use a caliper to measure the total thickness of the 2 No.4 brake flanges, 4 No.4 brake plates, and 5 No.4 brake discs (dimension B) at both ends of the diameter, and calculate the average.
NOTE:
Dimension B = 23.64 to 26.00 mm {0.931 to 1.023 in}
Pack clearance = dimension A - dimension B - 0.18 mm {0.0071 in} + 1.8 mm {0.0709 in}
Pack clearance: 0.5 to 0.8 mm {0.0197 to 0.0315in}

(4) If the pack clearance is out of the normal range, select a No.4 brake flange with the pack clearance within the normal range and install it.
NOTE:
There are 10 types of No.4 brake flanges that can be used for pack clearance adjustment. Select the one with the most suitable thickness.

Thickness H

Part number	Mark	Thickness H
30098AC170	0	0mm {0in}
30098AC180	1	0.17mm {0.00669in}
30098AC190	3	0.31mm {0.0122in}
30098AC200	4	0.45mm {0.0177in}
30098AC210	5	0.59mm {0.0232in}
30098AC220	7	0.73mm {0.0287in}
30098AC230	8	0.87mm {0.0342in}
30098AC240	10	1.01mm {0.0397in}
30098AC250	11	1.15mm {0.0452in}
30098AC260	12	1.29mm {0.0507in}

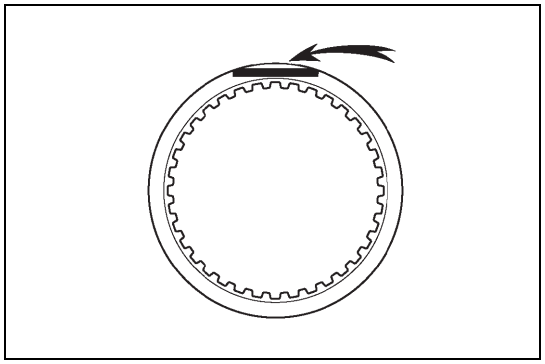

4. Check of No.4 brake disc
   (1) Check for wear and seizing on the sliding surfaces of the disc, plate, and flange.
   Replace them as required.
   CAUTION:
   - If the disc lining is peeling or discolored, or if even a part of the printed number is damaged, replace the all discs.
   - Soak new discs in ATF for at least 15 minutes before the assembly.

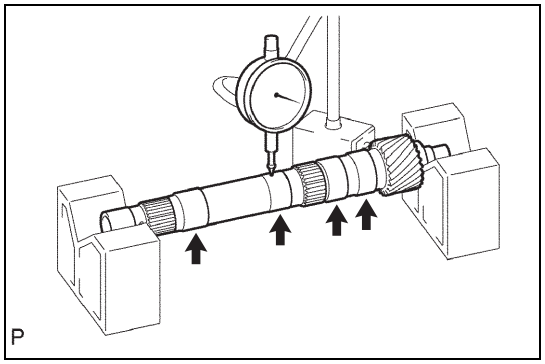

5. Check of intermediate shaft
   (1) Use a dial gauge to check the runout of the intermediate shaft.
   Normal runout: 0.03mm {0.00118in}
   If the runout is larger than the normal value, replace the intermediate shaft with a new one.

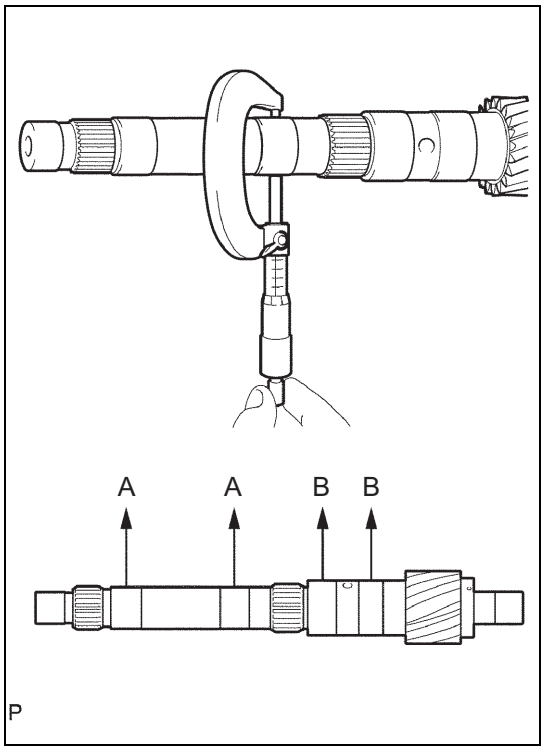

   (2) Use a micrometer to check the outer diameters of the intermediate shaft at the positions shown in the figure.
   Normal diameter:
   A: 22.962 to 22.975mm {0.9041 to 0.9045in}
   B: 27.759 to 27.775mm {1.0929 to 1.0935in}
   If the outer diameter is smaller than the normal value, replace the intermediate shaft with a new one.

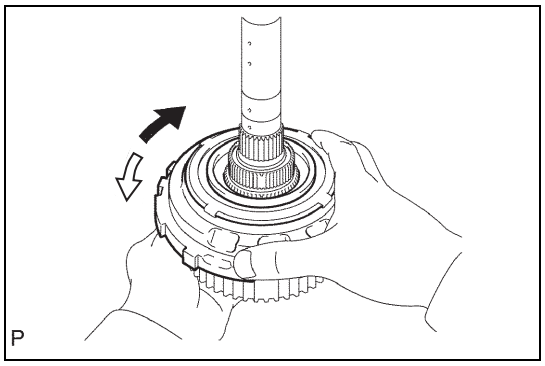

6. Check of No.3 one-way clutch ASSY
   (1) Hold the rear planetary ring gear flange SUB-ASSY and turn the No.3 one-way clutch ASSY.

Captions in illustration

➡	Lock
⇨	Release

(2) Check that when the No.3 one-way clutch ASSY is turned counter-clockwise it turns freely, whereas when it is turned clockwise it is locked.
If any malfunction is found in the No.3 one-way clutch ASSY, replace it.

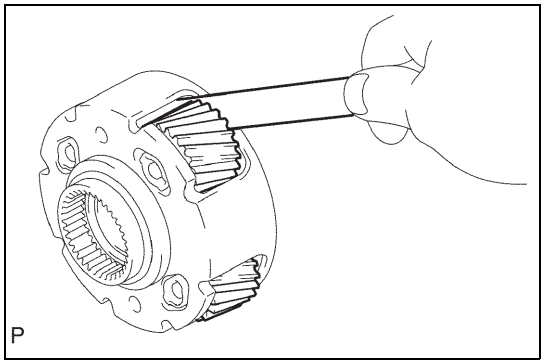

7. Check of center planetary gear ASSY
(1) Measure the center planetary gear pinion thrust clearance.
Normal clearance: 0.12 to 0.68mm {0.00473 to 0.0267in}
If the measured clearance is larger than the normal clearance, replace the center planetary gear ASSY.

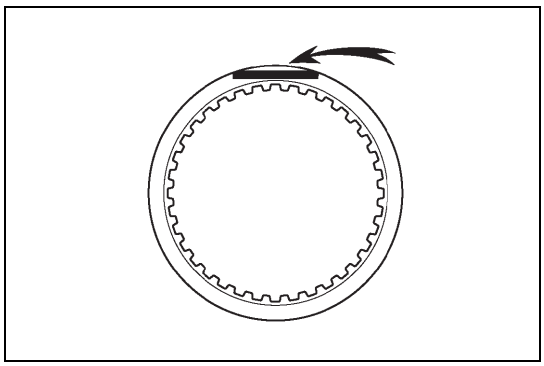

8. Check of No.2 brake disc
(1) Check for wear and seizing on the sliding surfaces of the disc, plate, and flange.
Replace them as required.
CAUTION:
- If the disc lining is peeling or discolored, or if even a part of the printed number is damaged, replace the all discs.
- Soak new discs in ATF for at least 15 minutes before the assembly.

AT

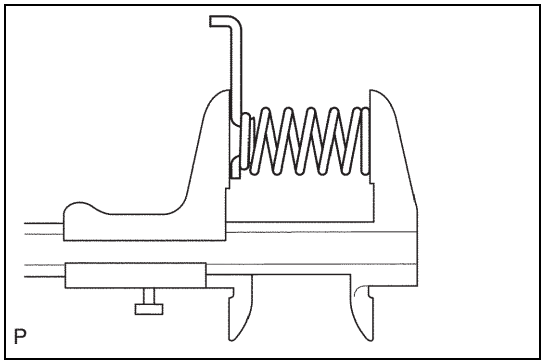

9. Check of No.2 brake piston return spring SUB-ASSY
(1) Measure the free length of the spring including the spring seat.
Normal free length: 22.66mm {0.892in}
If the measured free length is shorter than the normal free length, replace the No.2 brake piston return spring SUB-ASSY.

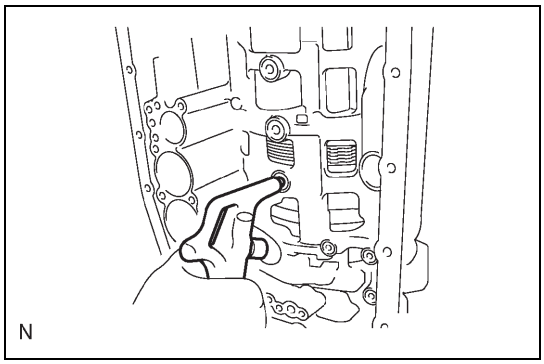

10. Check of piston stroke of No.2 brake piston
(1) Apply compressed air (392 kPa {4.0 kgf/cm^2, 57 psi}), release the air gun, and then check that the No.2 brake piston moves smoothly.

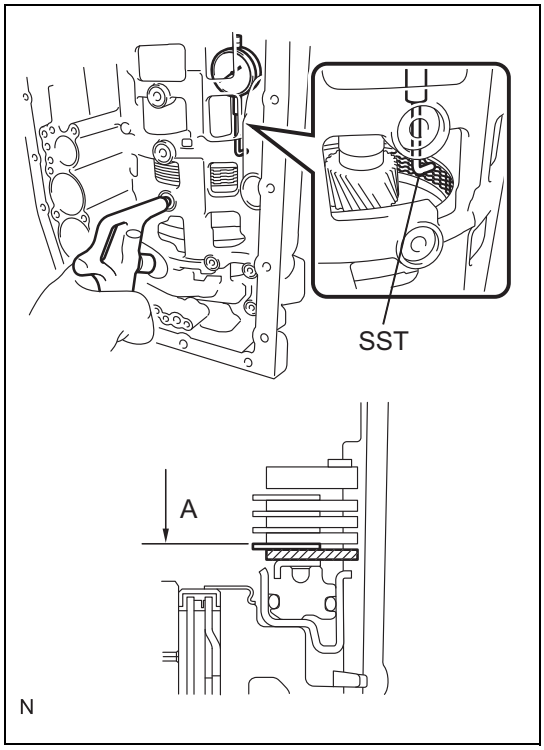

(2) While blowing compressed air (392 kPa {4.0 kgf/cm^2, 57 psi}) into the oil hole as shown in the figure, use the SST to measure the piston stroke of the No.2 brake piston (distance A) at both ends of the diameter, and calculate the average.
SST 09350-06120
Piston stroke: 0.6 to 0.9mm {0.0237 to 0.0354in}

(3) If the piston stroke is out of the normal range, select a No.2 brake flange with the piston stroke within the normal range and install it.
NOTE:
There are 8 types of No.2 brake flanges that can be used for piston stroke adjustment. Select the one with the most suitable thickness.

Flange thickness

Part number	Mark	Thickness
30098AB230	0	2.0mm {0.0787in}
30098AB240	1	2.1mm {0.0827in}
30098AB250	2	2.2mm {0.0866in}
30098AB260	3	2.3mm {0.0906in}
30098AB270	4	2.4mm {0.0945in}
30098AB280	5	2.5mm {0.0984in}
30098AB290	6	2.6mm {0.102in}
30098AB300	7	2.7mm {0.106in}

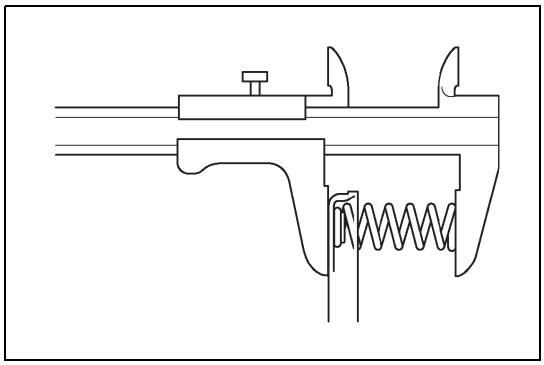

11. Check of brake piston return spring SUB-ASSY
(1) Measure the free length of the spring including the spring seat.
Normal free length: 17.05mm {0.671in}
If the measured free length is shorter than the normal free length, replace the brake piston return spring SUB-ASSY.

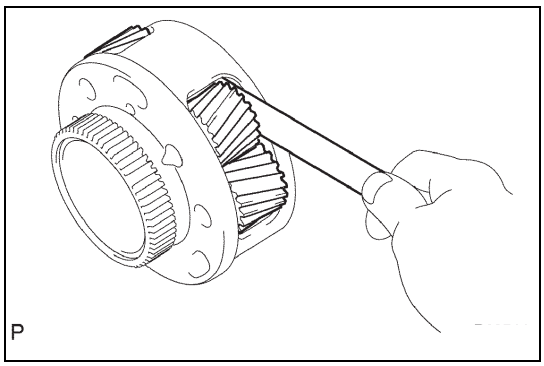

12. Check of front planetary gear ASSY
(1) Measure the front planetary gear pinion thrust clearance.
Normal clearance: 0.20 to 0.60mm {0.00788 to 0.0236in}
If the measured clearance is larger than the normal clearance, replace the front planetary gear ASSY.

AT

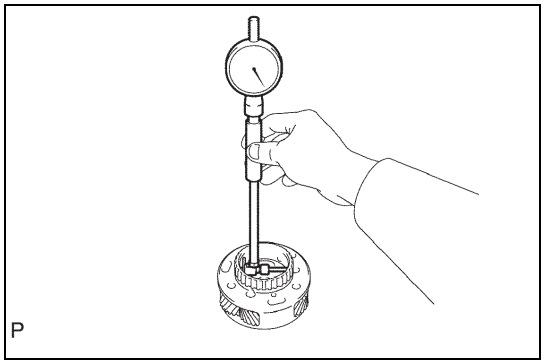

(2) Measure the inner diameter of the front planetary gear bushing.
Normal inner diameter: 48.78mm {1.92in}
If the measured inner diameter is larger than the normal inner diameter, replace the front planetary gear ASSY.

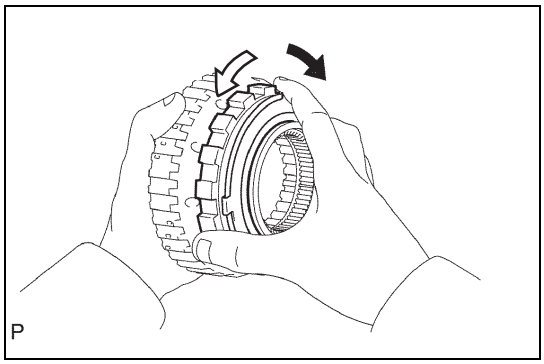

13. Check of one-way clutch ASSY
(1) Install the one-way clutch ASSY to the one-way clutch inner race SUB-ASSY.

Captions in illustration

➡	Lock
⇨	Release

(2) Hold the one-way clutch inner race SUB-ASSY and turn the one-way clutch ASSY.
(3) Check that when the one-way clutch ASSY is turned counterclockwise it turns freely, whereas when it is turned clockwise it is locked. If any malfunction is found in the one-way clutch ASSY, replace it.
(4) Remove the one-way clutch ASSY from the one-way clutch inner race SUB-ASSY.

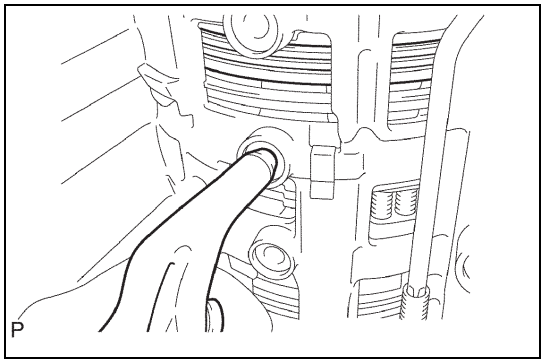

14. Check of piston stroke of No.1 brake piston
(1) Blow compressed air (392 kPa {4.0 kgf/cm^2, 57 psi}), release the air gun, and then check that the No.1 brake piston moves smoothly.

AT

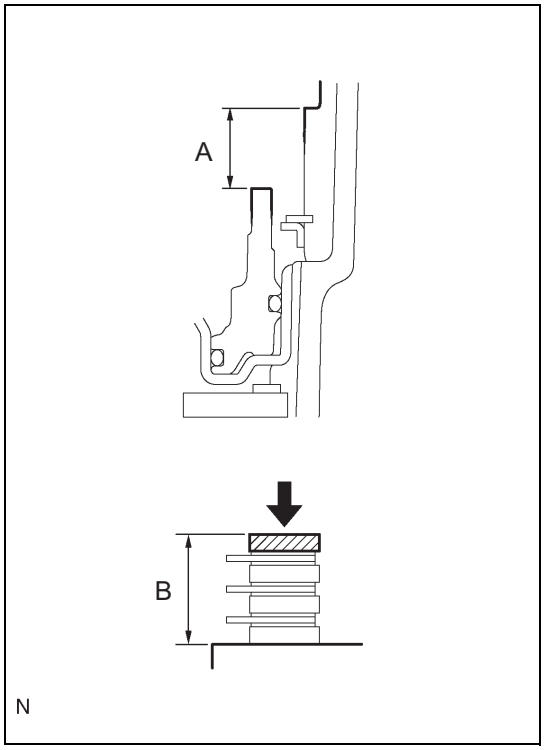

(2) While applying a pressure of 4.9 N {0.5 kgf, 1.1 lbf} or less, measure height difference between the upper surface of the No.1 brake piston and the No.1 brake flange contact surface (dimension A) at both ends of the diameter of the No.1 brake piston.

(3) Measure the total thickness of the No.1 brake flange, 3 No.1 brake plates, and 3 No.1 brake discs (dimension B) at both ends of the diameter, and calculate the average.
NOTE:
Dimension A = 15.27 to 15.92 mm {0.602 to 0.626 in}
Dimension B = 14.50 to 15.54 mm {0.571 to 0.611 in}
Piston stroke = dimension A - dimension B
Piston stroke: 0.42 to 0.72mm {0.0166 to 0.0283in}

(4) If the piston stroke is out of the normal range, the parts may be assembled incorrectly. Check them and assemble again.

(5) If the piston stroke is still out of the normal range, select another No.1 brake flange with the piston stroke within the normal range.
NOTE:
There are 4 types of No.1 brake flanges that can be used for piston stroke adjustment. Select the one with the most suitable thickness.

Flange thickness

Part number	Mark	Thickness
30098AB170	0	2.0mm {0.0787in}
30098AB180	1	2.2mm {0.0866in}
30098AB190	2	2.4mm {0.0945in}
30098AB200	3	2.6mm {0.102in}

AT

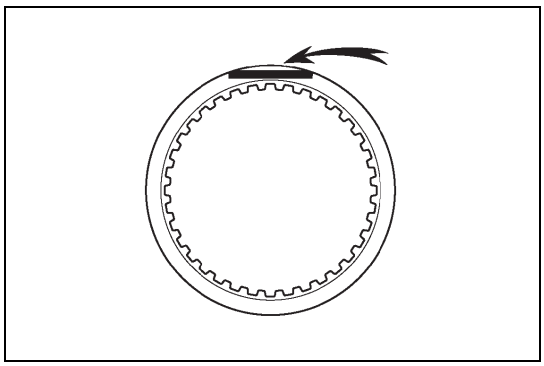

15. Check of No.1 brake disc

(1) Check for wear and seizing on the sliding surfaces of the disc, plate, and flange.
Replace them as required.
CAUTION:
- If the disc lining is peeling or discolored, or if even a part of the groove is damaged, replace the all discs.
- Soak new discs in ATF for at least 15 minutes before the assembly.

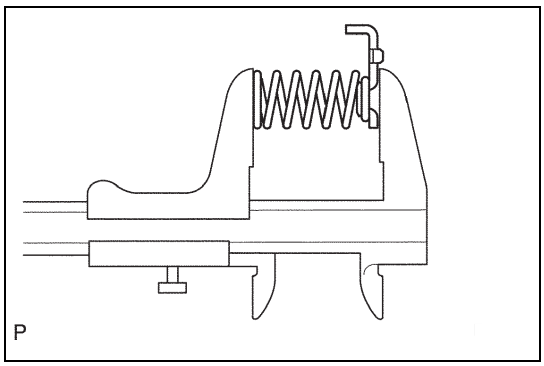

16. Check of No.3 brake piston return spring SUB-ASSY

(1) Measure the free length of the spring including the spring seat.
Normal free length: 15.72mm {0.619in}
If the measured free length is shorter than the normal free length, replace the No.3 brake piston return spring set SUB-ASSY.

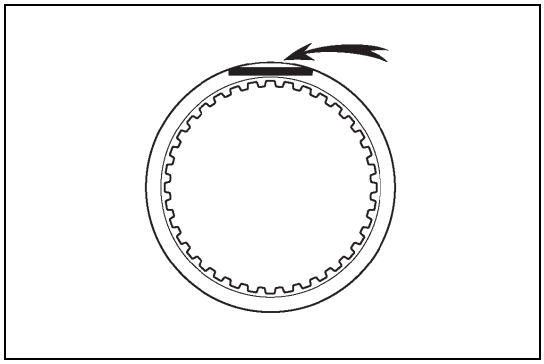

17. Check of No.3 brake disc set
    (1) Check for wear and seizing on the sliding surfaces of the disc, plate, and flange.
    Replace them as required.
    CAUTION:
    - If the disc lining is peeling or discolored, or if even a part of the printed number is damaged, replace the all discs.
    - Soak new discs in ATF for at least 15 minutes before the assembly.

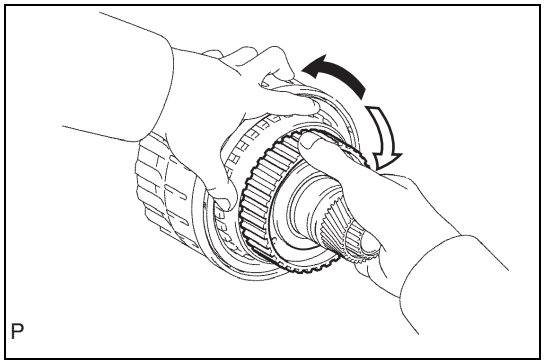

18. Check of No.2 one-way clutch ASSY
    (1) Hold the reverse clutch hub SUB-ASSY and turn the No.2 one-way clutch ASSY.

Captions in illustration

➡	Lock
⇨	Release

    (2) Check that when the No.2 one-way clutch ASSY is turned clockwise it turns freely, whereas when it is turned counterclockwise it is locked.
    If any malfunction is found in the No.2 one-way clutch ASSY, replace it.

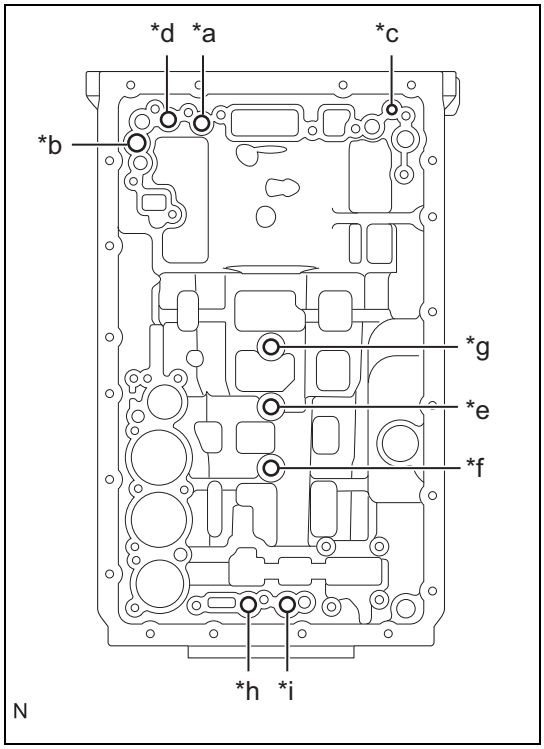

19. Operation check of each piston
    (1) Check the operation sound while blowing compressed air into the oil hole shown in the figure.

Captions in illustration

*a	No.1 clutch
*b	No.2 clutch
*c	No.3 clutch
*d	No.4 clutch
*e	No.1 brake
*f	No.2 brake
*g	No.3 brake
*h	No.4 brake (in)
*i	No.4 brake (out)

    NOTE:
    When checking the direct clutch, check the operation sound with the C3 accumulator piston hole closed.
    If no sound is heard, disassemble the parts and check their installation conditions.

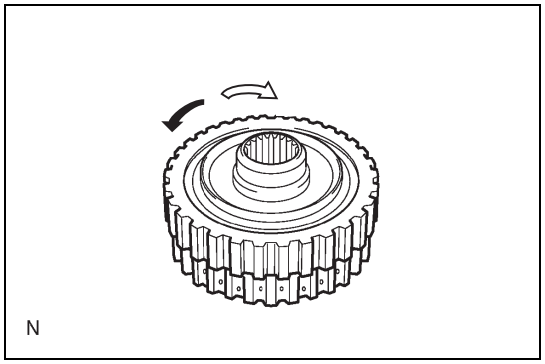

20. Check of No.4 one-way clutch ASSY
    (1) Hold the coast clutch hub SUB-ASSY and turn the No.4 one-way clutch ASSY.

Captions in illustration

➡	Lock
⇨	Release

    (2) Check that when the No.4 one-way clutch ASSY is turned clockwise it turns freely, whereas when it is turned counterclockwise it is locked.
    If any malfunction is found in the No.4 one-way clutch ASSY, replace it.

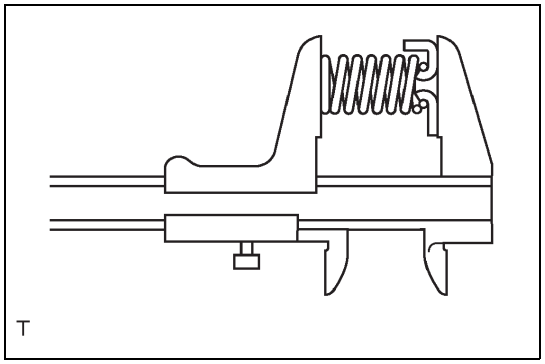

21. Check of direct clutch return spring SUB-ASSY
    (1) Measure the free length of the spring including the spring seat.
    Normal free length: 20.02mm {0.788in}
    If the measured free length is shorter than the normal free length, replace the direct clutch return spring SUB-ASSY.

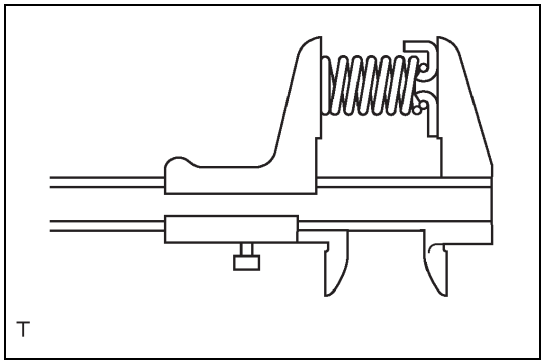

22. Check of reverse clutch return spring SUB-ASSY
    (1) Measure the free length of the spring including the spring seat.
    Normal free length: 21.03mm {0.828in}
    If the measured free length is shorter than the normal free length, replace the reverse clutch return spring SUB-ASSY.

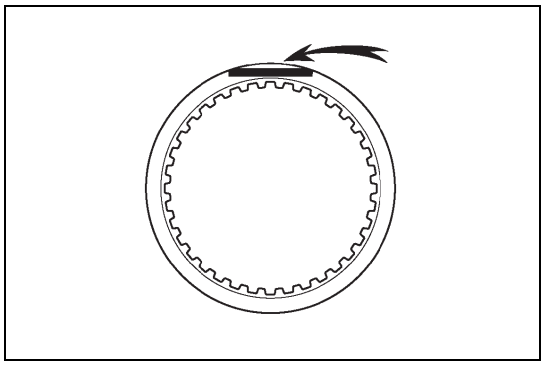

23. Check of No.2 clutch disc (direct clutch disc)
    (1) Check for wear and seizing on the sliding surfaces of the disc, plate, and flange.
    Replace them as required.
    CAUTION:
    - If the disc lining is peeling or discolored, or if even a part of the printed number is damaged, replace the all discs.
    - Soak new discs in ATF for at least 15 minutes before the assembly.

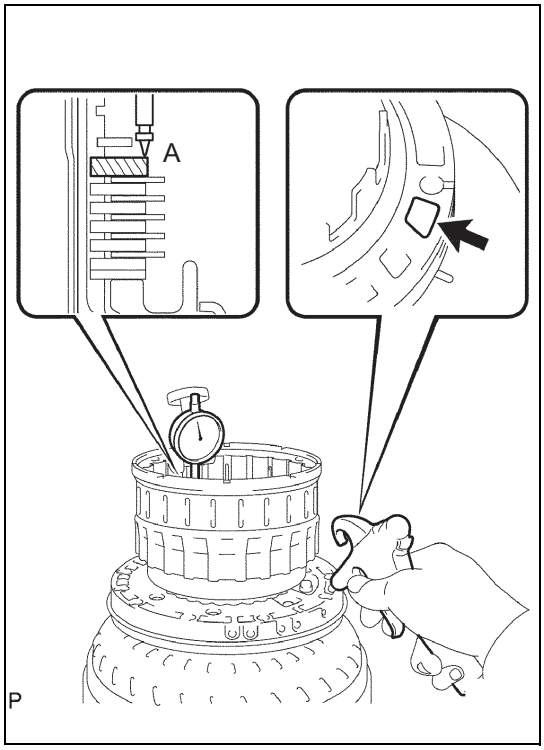

24. Check of No.2 clutch pack clearance
    (1) While blowing compressed air (392 kPa {4.0 kgf/cm^2, 57 psi}) into the oil hole as shown in the figure, use a dial gauge to measure the travel distance of the direct clutch flange (distance A) at both ends of the diameter, and calculate the average.
    NOTE:
    Flange travel distance A = 0.24 to 1.12 mm {0.00944 to 0.0440 in}
    Pack clearance = flange travel distance A - 0.03mm {0.00118in}
    Pack clearance: 0.5 to 0.8 mm {0.0197 to 0.0314 in}
    CAUTION:
    When measuring the travel distance, install a normal flange (3.4 mm {0.134 in} thick) to the position indicated with shadow in the figure.
    (2) If the pack clearance is out of the normal range, select a direct clutch flange with the pack clearance within the normal range and install it.
    NOTE:
    There are 9 types of direct clutch flanges that can be used for pack clearance adjustment. Select the one with the most suitable thickness.

Flange thickness

Part number	Mark	Thickness
30098AB080	0	3.0mm {0.118in}
30098AB090	1	3.1mm {0.122in}
30098AB100	2	3.2mm {0.126in}
30098AB110	3	3.3mm {0.130in}
30098AB120	4	3.4mm {0.134in}
30098AB130	5	3.5mm {0.138in}
30098AB140	6	3.6mm {0.142in}
30098AB150	7	3.7mm {0.146in}
30098AB160	8	3.8mm {0.150in}

AT

25. Check of No.3 clutch pack clearance
    (1) While blowing compressed air (392 kPa {4.0 kgf/cm^2, 57 psi}) into the oil hole as shown in the figure, use a dial gauge to measure the reverse clutch piston stroke (distance A) and the travel distance of the reverse clutch flange (distance B) at both ends of the diameter, and calculate the average.

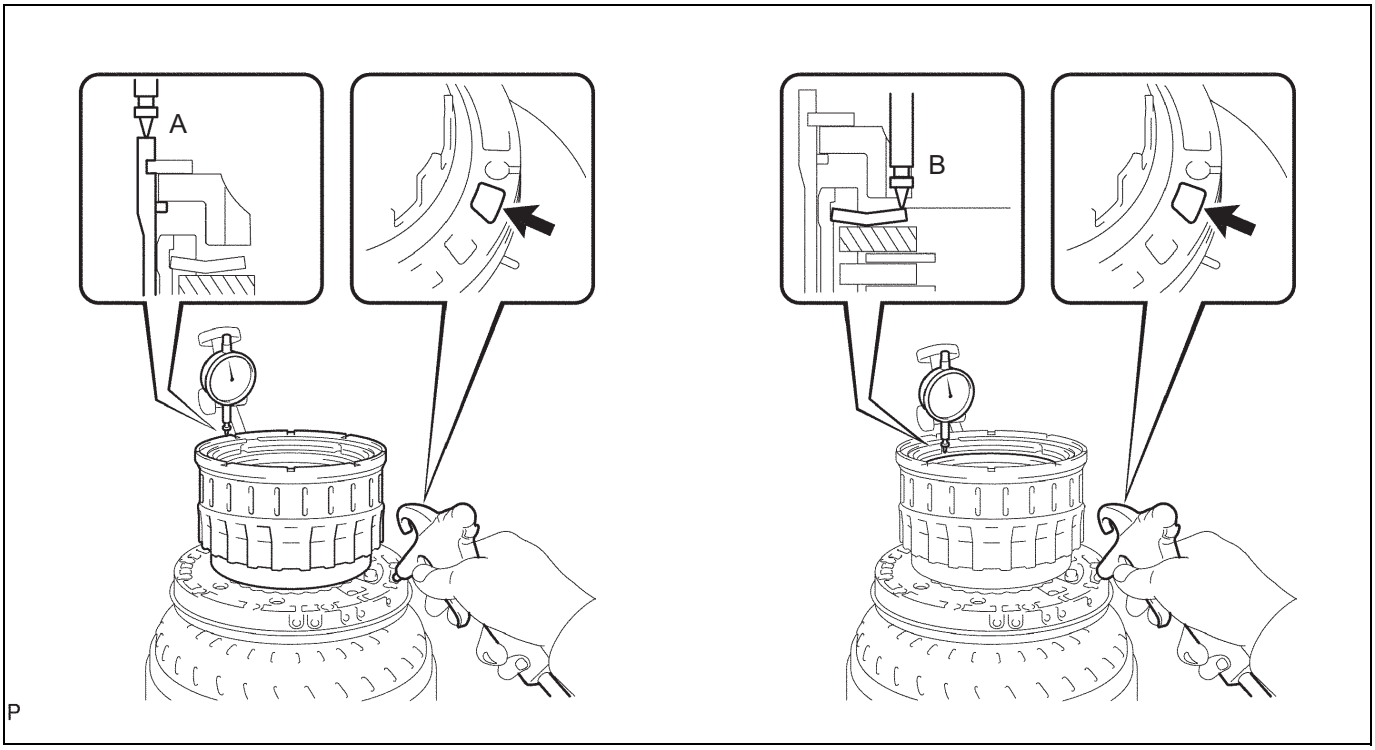

NOTE:
Piston stroke A = 1.62 to 2.68 mm {0.0638 to 0.105 in}
Flange travel distance B = 1.22 to 1.67 mm {0.0481 to 0.0657 in}
Pack clearance = piston stroke A - flange travel distance B - 0.02 mm {0.000787 in}
Pack clearance: 0.4 to 0.7mm {0.0158 to 0.0275in}
CAUTION:
When measuring the travel distance, install a normal flange (2.8 mm {0.110 in} thick) to the position indicated with shadow in the figure.

AT

(2) If the pack clearance is out of the normal range, select a reverse clutch flange with the pack clearance within the normal range and install it.
NOTE:
There are 12 types of reverse clutch flanges that can be used for pack clearance adjustment. Select the one with the most suitable thickness.

Flange thickness

Part number	Mark	Thickness
30098AA770	0	2.4mm {0.0945in}
30098AA780	1	2.5mm {0.0984in}
30098AA790	2	2.6mm {0.102in}
30098AA800	3	2.7mm {0.106in}
30098AA810	4	2.8mm {0.110in}
30098AA820	5	2.9mm {0.114in}
30098AA830	6	3.0mm {0.118in}
30098AA840	7	3.1mm {0.122in}
30098AA850	8	3.2mm {0.126in}
30098AA860	9	3.3mm {0.130in}
30098AA870	A	3.4mm {0.134in}
30098AA880	B	3.5mm {0.138in}

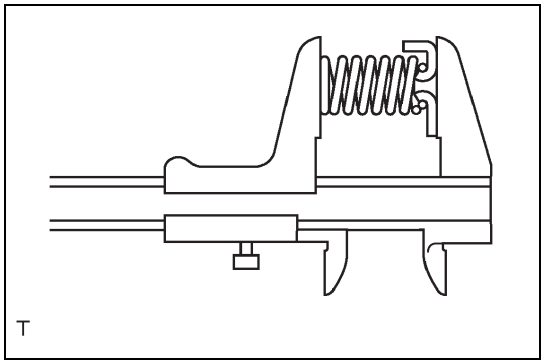
T

26. Check of forward clutch return spring SUB-ASSY
    (1) Use a caliper gauge to measure the free length of the spring including the spring seat.
    Normal free length: 26.29mm {1.04in}
    If the measured free length is shorter than the normal free length, replace the forward clutch return spring SUB-ASSY.

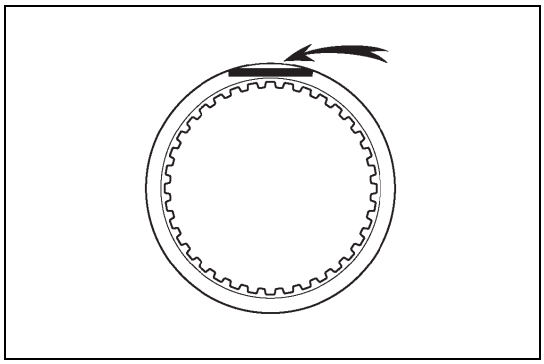

27. Check of No.4 clutch disc (coast clutch disc)
    (1) Check for wear and seizing on the sliding surfaces of the disc, plate, and flange.
    Replace them as required.
    CAUTION:
    - If the disc lining is peeling or discolored, or if even a part of the printed number is damaged, replace the all discs.
    - Soak new discs in ATF for at least 15 minutes before the assembly.

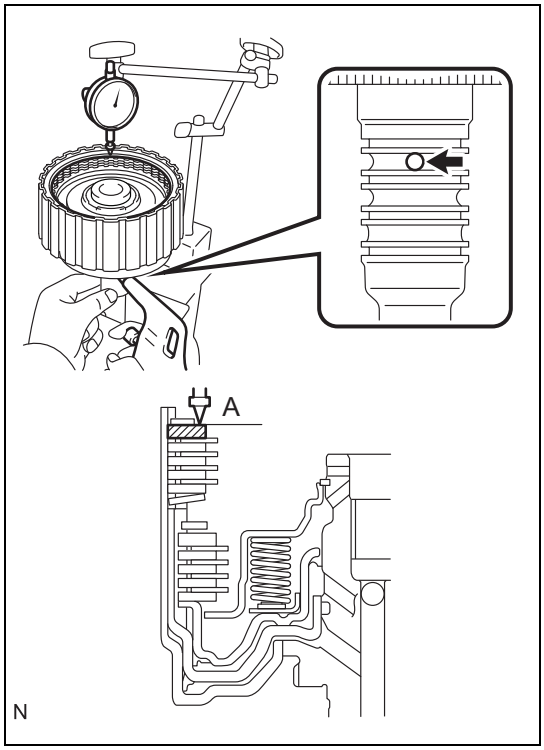

N

28. Check of No.1 clutch pack clearance
    (1) While blowing compressed air (196 kPa {2.0 kgf/cm^2, 28 psi}) into the oil hole as shown in the figure, use a dial gauge to measure the travel distance of the forward clutch flange (distance A) at both ends of the diameter, and calculate the average.
    NOTE:
    Flange travel distance A = 0.14 to 0.17 mm {0.0055 to 0.0067 in}
    Pack clearance = flange travel distance A - 0.01 mm {0.0004 in}
    Pack clearance: 0.56 to 0.86mm {0.0221 to 0.0338in}
    CAUTION:
    When measuring the travel distance, install a normal flange (3.5 mm {0.138 in} thick) to the position indicated with shadow in the figure.
    (2) If the pack clearance is out of the normal range, select a forward clutch flange with the pack clearance within the normal range and install it.
    NOTE:
    There are 10 types of forward clutch flanges that can be used for pack clearance adjustment. Select the one with the most suitable thickness.

Flange thickness

Part number	Mark	Thickness
30098AA630	0	3.0mm {0.118in}
30098AA640	1	3.1mm {0.122in}
30098AA650	2	3.2mm {0.126in}
30098AA670	3	3.3mm {0.130in}
30098AA680	4	3.4mm {0.134in}
30098AA690	5	3.5mm {0.138in}
30098AA700	6	3.6mm {0.142in}
30098AA710	7	3.7mm {0.146in}
30098AA720	8	3.8mm {0.150in}
30098AA730	9	3.9mm {0.154in}

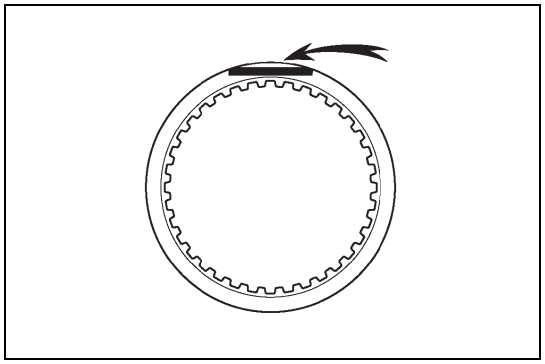

29. Check of No.1 clutch disc (forward clutch disc)
    (1) Check for wear and seizing on the sliding surfaces of the disc, plate, and flange.
    Replace them as required.
    CAUTION:
    - If the disc lining is peeling or discolored, or if even a part of the printed number is damaged, replace the all discs.
    - Soak new discs in ATF for at least 15 minutes before the assembly.

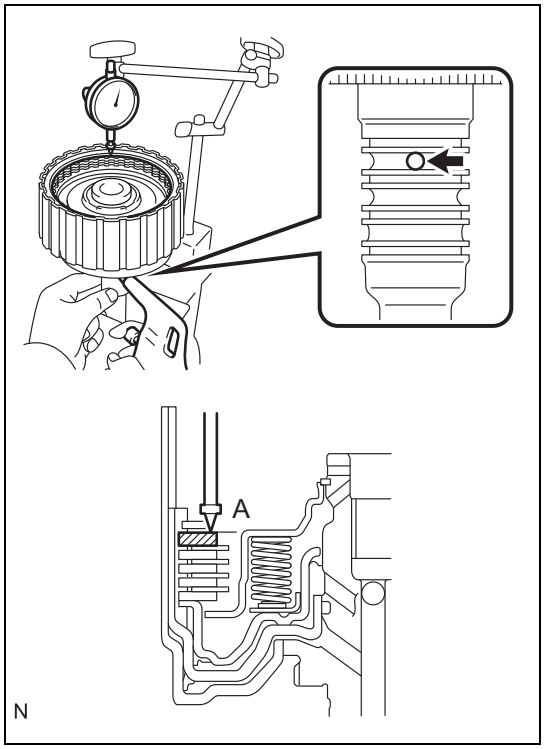

30. Check of No.4 clutch pack clearance
    (1) While blowing compressed air (196 kPa {2.0 kgf/cm2, 28 psi}) into the oil hole as shown in the figure, use a dial gauge to measure the travel distance of the coast clutch flange (distance A) at both ends of the diameter, and calculate the average.
    NOTE:
    Flange travel distance A = 0.02 to 1.01mm {0.000787 to 0.0397in}
    Pack clearance = flange travel distance A - 0.01 mm {0.000394in}
    Pack clearance: 0.4 to 0.7mm {0.0158 to 0.0275in}
    CAUTION:
    When measuring the travel distance, install a normal flange (3.5 mm {0.0158 to 0.0275 in} thick) to the position indicated with shadow in the figure.
    (2) If the pack clearance is out of the normal range, select a coast clutch flange with the pack clearance within the normal range and install it.
    NOTE:
    There are 10 types of coast clutch flanges that can be used for pack clearance adjustment. Select the one with the most suitable thickness.

Flange thickness

Part number	Mark	Thickness
30098AA980	0	3.0mm {0.118in}
30098AA990	1	3.1mm {0.122in}
30098AB000	2	3.2mm {0.126in}
30098AB010	3	3.3mm {0.130in}
30098AB020	4	3.4mm {0.134in}
30098AB030	5	3.5mm {0.138in}
30098AB040	6	3.6mm {0.142in}
30098AB050	7	3.7mm {0.146in}
30098AB060	8	3.8mm {0.150in}
30098AB070	9	3.9mm {0.154in}

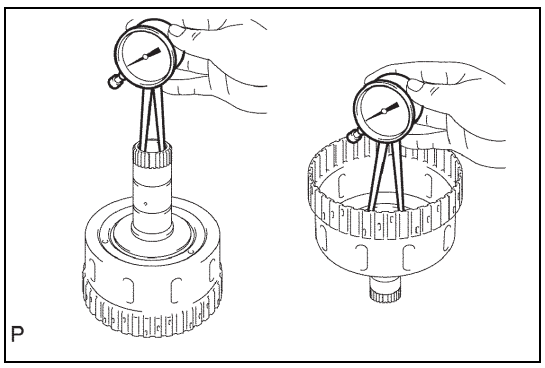

31. Check of forward clutch hub SUB-ASSY
    (1) Use a caliper gauge to check the inner diameter of the forward clutch hub bushing.
    Normal inner diameter: 23.037 to 23.062mm {0.9070 to 0.9079in}
    If the measured inner diameter is longer than the normal inner diameter, replace the forward clutch hub SUB-ASSY.

AT

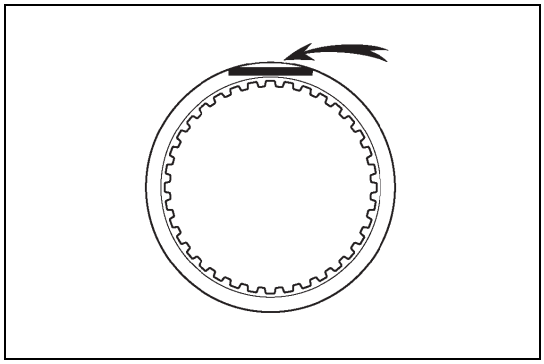

32. Check of No.3 clutch disc
    (1) Check for wear and seizing on the sliding surfaces of the disc, plate, and flange.
    Replace them as required.
    CAUTION:
    - If the disc lining is peeling or discolored, or if even a part of the printed number is damaged, replace the all discs.
    - Soak new discs in ATF for at least 15 minutes before the assembly.

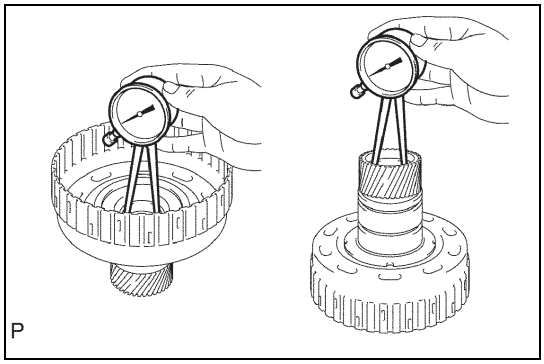

33. Check of reverse clutch hub SUB-ASSY
    (1) Measure the inner diameter of the reverse clutch hub bushing.
    Normal inner diameter: 33.312 to 33.337mm {1.3115 to 1.3125in}
    If the measured inner diameter is longer than the normal inner diameter, replace the reverse clutch hub SUB-ASSY.

Assembly

1. Bearing position

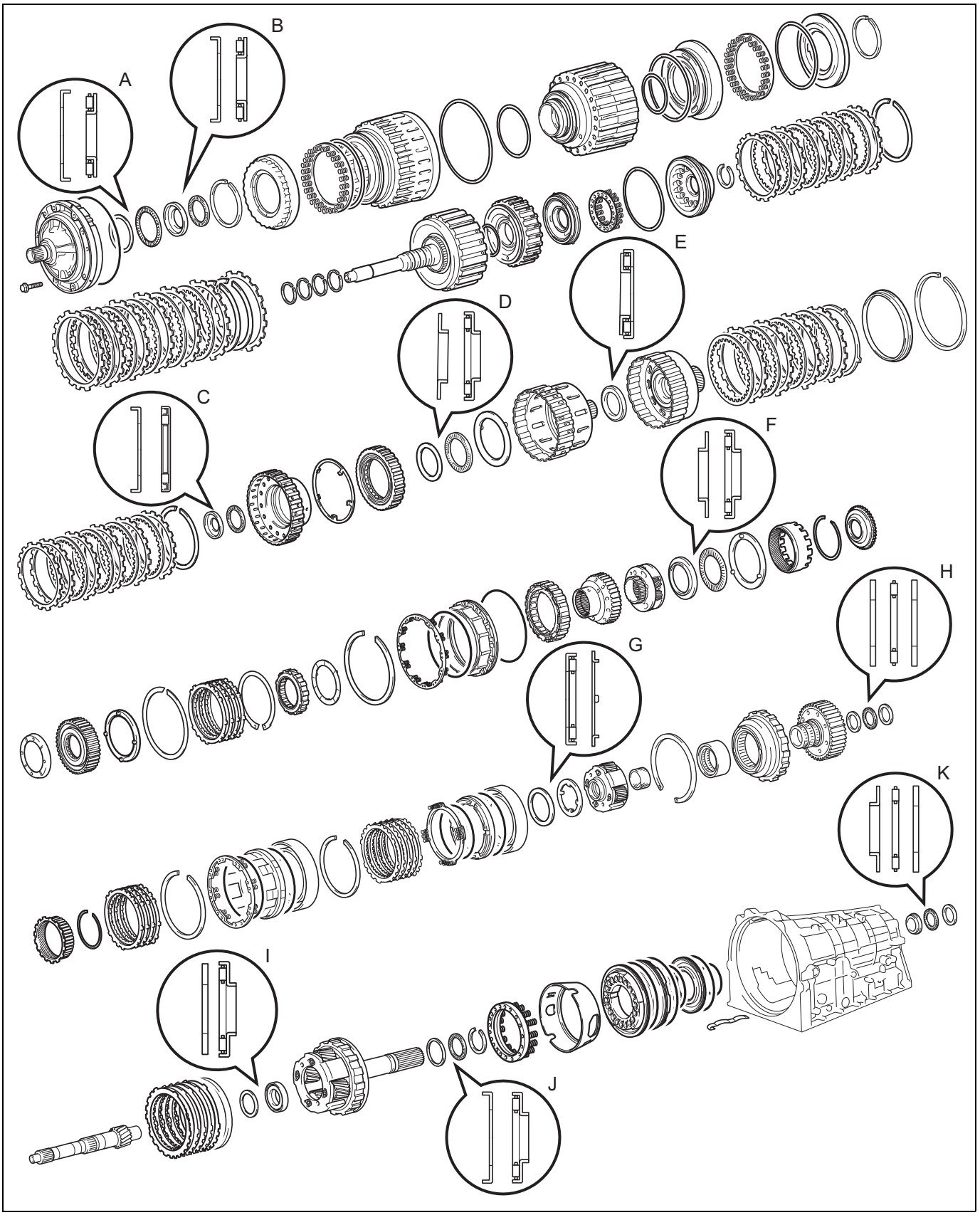

Mark	Front race diameter Inner/outer	Thrust bearing diameter Inner/outer	Rear race diameter Inner/outer
A	74.2mm {2.921in} / 87.7 mm {3.453 in.)	71.9mm {2.831 in} / 85.6 mm {3.370 in}	-
B	37.0mm {1.457in} / 51.2 mm {2.016 in.)	33.5mm {1.319 in} / 48.0 mm {1.890 in}	-
C	20.0mm {0.787in} / 35.6 mm {1.402 in.)	20.0mm {0.787 in} / 41.0 mm {1.614 in}	-
D	31.0mm {1.220 in} / 48.0 mm {1.890 in}	33.3mm {1.311 in} / 51.2 mm {2.016 in}	-
E	-	42.5mm {1.673 in} / 61.2 mm {2.409 in}	-
F	34.9mm {1.374 in} / 50.8 mm {1.999 in}	38.6mm {1.520 in} / 53.1 mm {2.091 in}	-
G	-	58.5mm {2.303 in} / 73.5 mm {2.894 in}	55.2mm {2.173 in} / 71.2 mm {2.803 in}
H	29.6mm {1.165 in} / 44.9 mm {1.768 in}	27.8mm {1.095 in} / 43.8 mm {1.726 in}	27.8mm {1.095 in} / 43.7 mm {1.721 in}
I	19.0mm {0.748 in} / 35.0 mm {1.378 in}	20.8mm {0.819 in} / 38.5 mm {1.516 in}	-
J	43.3mm {1.705 in} / 56.7 mm {2.232 in}	40.6 mm {1.598 in} / 58.0 mm {2.284 in}	-
K	37.0mm {1.457 in} / 51.2 mm {2.016 in}	36.1mm {1.421 in} / 52.5 mm {2.067 in}	36.1mm {1.421 in} / 51.0 mm {2.007 in}

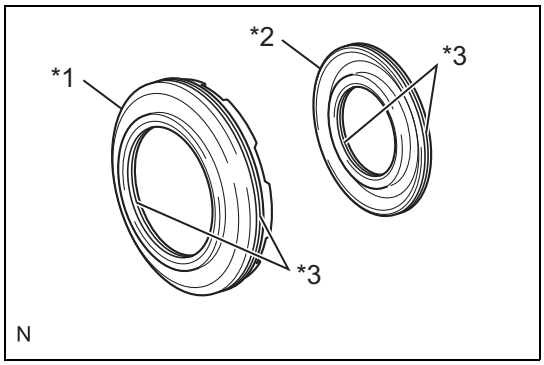

2. Installation of No.4 brake piston
   (1) Apply ATF to 2 new O-rings and install them to the brake reaction sleeve.

Captions in illustration

*1	Brake reaction sleeve
*2	No.4 brake piston
*3	O-ring

   (2) Apply ATF to 2 new O-rings and install them to the No.4 brake piston.
   (3) Install the No.4 brake piston to the brake reaction sleeve.
   CAUTION:
   Be careful not to damage the O-ring.

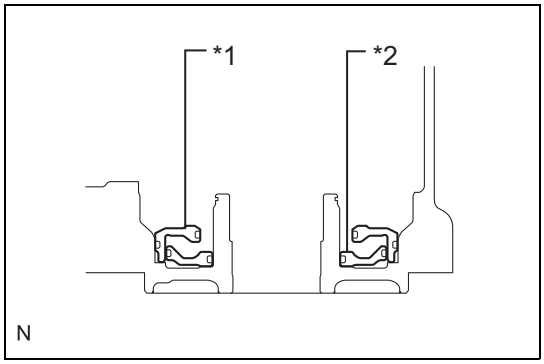

3. Installation of brake reaction sleeve
   (1) Install the brake reaction sleeve and No.4 brake piston to the automatic transmission case SUB-ASSY with the No.4 brake piston facing downward (rear side).

Captions in illustration

*1	Brake reaction sleeve
*2	No.4 brake piston

   CAUTION:
   Be careful not to damage the O-ring.

AT

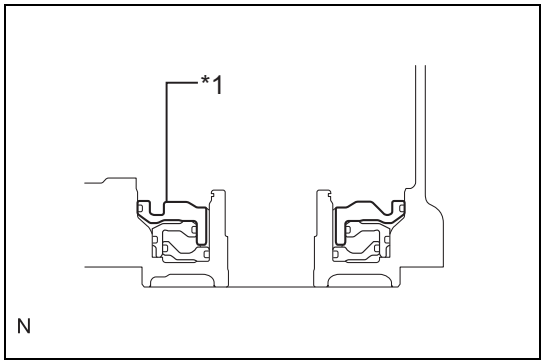

4. Installation of 1st & reverse brake piston
   (1) Apply ATF to a new O-ring and install it to the 1st & reverse brake piston.

Captions in illustration

*1	1st & reverse brake piston

   (2) Place the 1st & reverse brake piston in the automatic transmission case SUB-ASSY with the spring seat of the 1st & reverse brake piston facing upward (front side).
   CAUTION:
   Be careful not to damage the O-ring.

5. Installation of 1st & reverse brake return spring SUB-ASSY
   (1) Place the 1st & reverse brake return spring SUB-ASSY on the 1st & reverse brake piston.

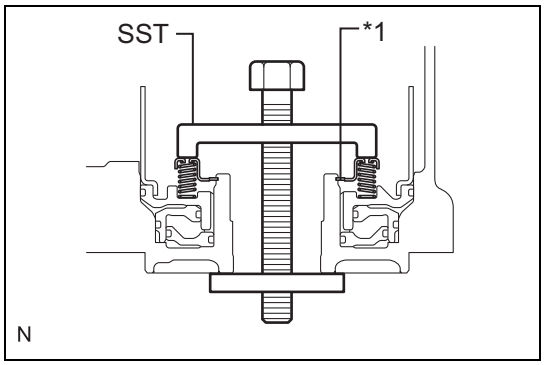

   (2) Place the SST on the 1st & reverse brake return spring SUB-ASSY and press the 1st & reverse brake return spring SUB-ASSY.

Captions in illustration

*1	Snap ring

SST 09350-07050

   (3) Install the snap ring.

AT

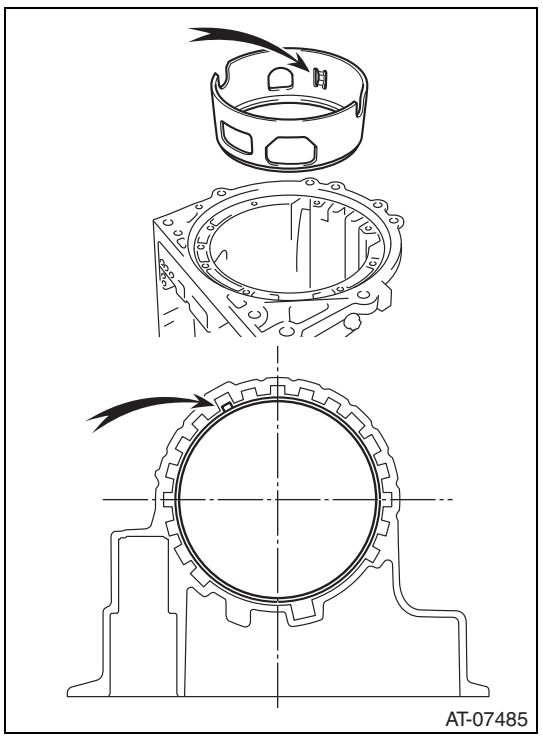

6. Installation of brake apply tube
   (1) Install the brake apply tube so that the protrusion fits into the groove of the automatic transmission case SUB-ASSY as shown in the figure.
   CAUTION:
   - Engage the claw of the 1st & reverse brake piston with the protrusion of the brake apply tube.
   - Peep through the rear side rotation sensor installation hole to check that the inside of the transmission case can be seen.

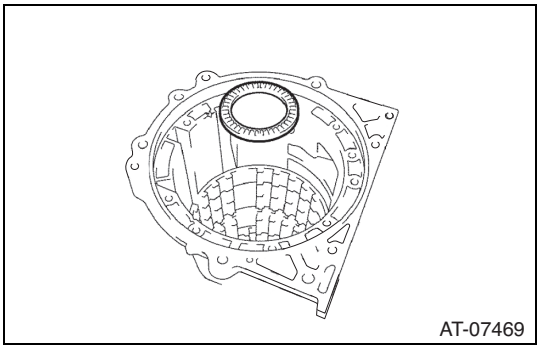

7. Installation of rear planetary gear ASSY
   (1) Install the thrust needle roller bearing to the automatic transmission case SUB-ASSY.

Bearing diameter

Item	Inner	Outer
Thrust needle roller bearing	40.6mm {1.598in}	58.0mm {2.284in}

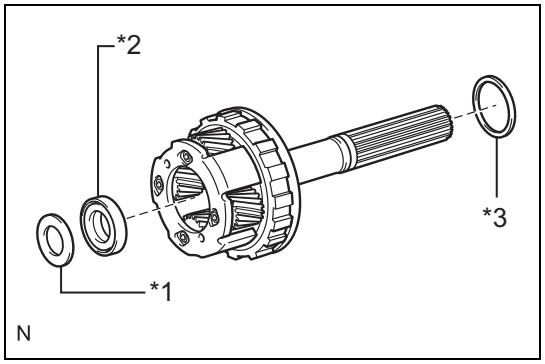

   (2) Install the thrust needle roller bearing to the rear planetary gear ASSY.

Captions in illustration

*1	Thrust bearing race
*2	Thrust needle roller bearing
*3	No.9 thrust bearing race

Bearing and race diameter

Item	Inner	Outer
Thrust needle roller bearing	20.8mm {0.819in}	38.5mm {1.516in}
Thrust bearing race	19.0mm {0.748in}	35.0mm {1.378in}
No.9 thrust bearing race	43.3mm {1.705in}	56.7mm {2.232in}

   (3) Apply petroleum jelly to the No.9 thrust bearing race and thrust bearing race and install them on the rear planetary gear ASSY.

   (4) Install the rear planetary gear ASSY to the automatic transmission case SUB-ASSY.

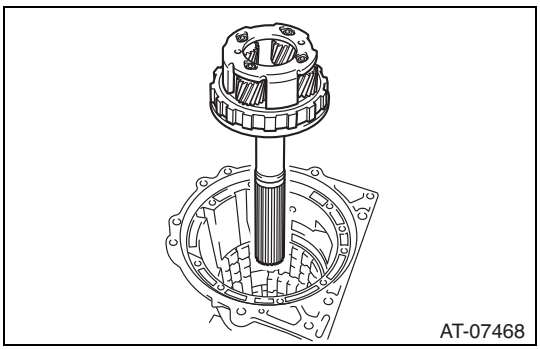

8. Check of No.4 brake pack clearance (refer to AT - 268)

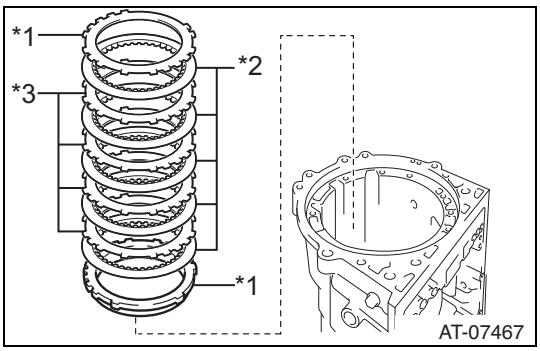

9. Installation of No.4 brake disc
   (1) Install 2 No.4 brake flanges, 5 No.4 brake discs, 4 No.4 brake plates to the automatic transmission case SUB-ASSY.

Captions in illustration

*1	No.4 brake flange
*2	No.4 brake disc
*3	No.4 brake plate

Installation order: *1 - *2 - *3 - *2 - *3 - *2 - *3 - *2 - *3 - *2 - *1

CAUTION:

Check that the disc, plate, and flange are installed in the correct order.

AT

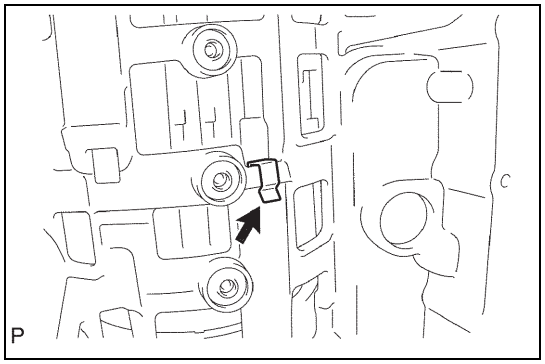

10. Installation of brake plate stopper spring
    (1) Install the brake plate stopper spring to the automatic transmission case SUB-ASSY.

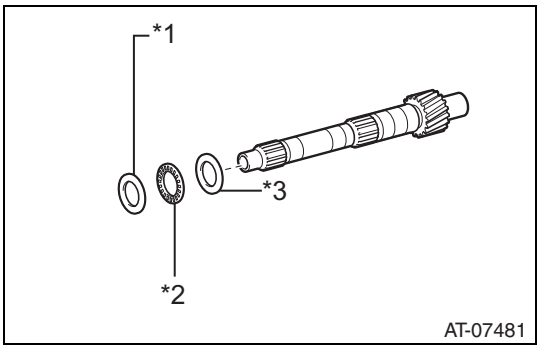

11. Installation of intermediate shaft
    (1) Install the No.8 thrust bearing race, thrust needle roller bearing, and No.7 thrust bearing race to the intermediate shaft.

Captions in illustration

*1	No.7 thrust bearing race
*2	Thrust needle roller bearing
*3	No.8 thrust bearing race

Bearing and race diameter

Item	Inner	Outer
No.7 thrust bearing race	29.6mm {1.165in}	44.9mm {1.768in}
Thrust needle roller bearing	27.8mm {1.095in}	43.8mm {1.726in}
No.8 thrust bearing race	27.8mm {1.095in}	43.7mm {1.721in}

    (2) Install the intermediate shaft to the transmission case SUB-ASSY.

AT

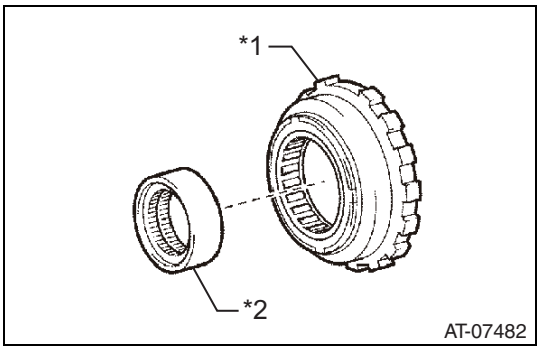

12. Installation of No.3 one-way clutch ASSY
    (1) Install the one-way clutch inner race to the No.3 one-way clutch ASSY.

Captions in illustration

*1	No.3 one-way clutch ASSY
*2	One-way clutch inner race

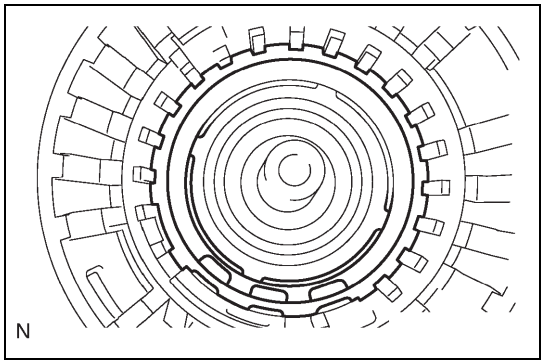

13. Installation of intermediate shaft
    (1) Install the No.3 one-way clutch ASSY to the automatic transmission case SUB-ASSY.

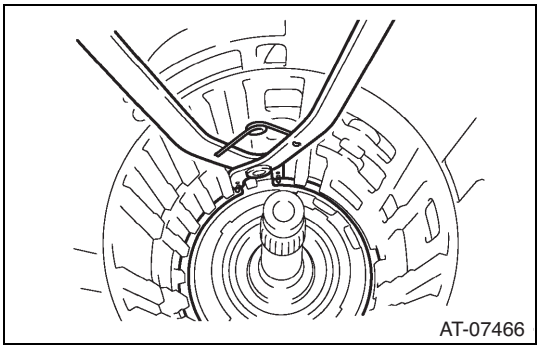

(2) Install the snap ring to the automatic transmission case SUB-ASSY.
NOTE:
Install the joint of the snap ring toward the control valve side.

14. Installation of center planetary gear ASSY
(1) Install the center planetary gear ASSY and planetary sun gear to the automatic transmission case SUB-ASSY.

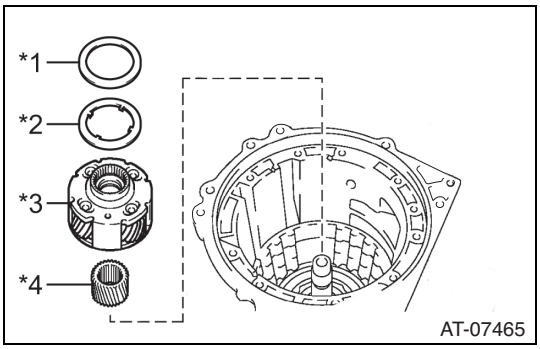

Captions in illustration

*1	Thrust needle roller bearing
*2	No.4 thrust bearing race
*3	Center planetary gear ASSY
*4	Planetary sun gear

Bearing and race diameter

Item	Inner	Outer
Thrust needle roller bearing	58.5mm {2.303in}	73.5mm {2.894in}
No.4 thrust bearing race	55.2mm {2.173in}	71.2mm {2.803in}

(2) Apply petroleum jelly to the No.4 thrust bearing race and install it on the center planetary gear ASSY.
(3) Install the thrust needle roller bearing to the center planetary gear ASSY.

AT

15. Installation of No.2 brake piston
(1) Apply ATF to 2 new O-rings and install them to the No.2 brake piston.

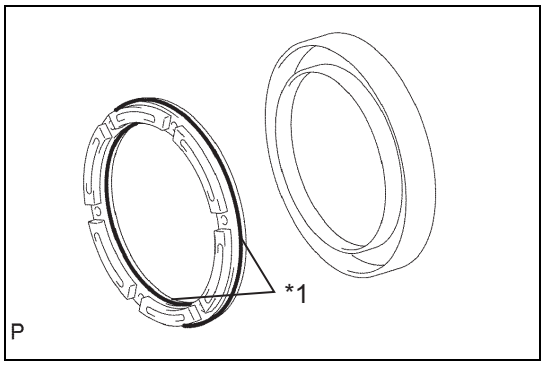

Captions in illustration

*1	O-ring

(2) Press the No.2 brake piston into the No.2 brake cylinder.
CAUTION:
Be careful not to damage the O-ring.
(3) Install the No.2 brake piston to the automatic transmission case SUB-ASSY.
NOTE:
Install the No.2 brake cylinder so that the protrusion protrudes from the upper side of the automatic transmission case SUB-ASSY.

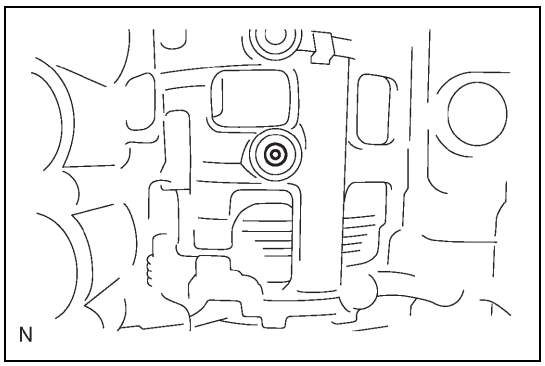

(4) Check that the oil pressure apply hole of the No.2 brake cylinder is aligned with the oil pressure apply hole of the automatic transmission case SUB-ASSY.

16. Installation of No.2 brake disc
(1) Install the brake piston return spring.

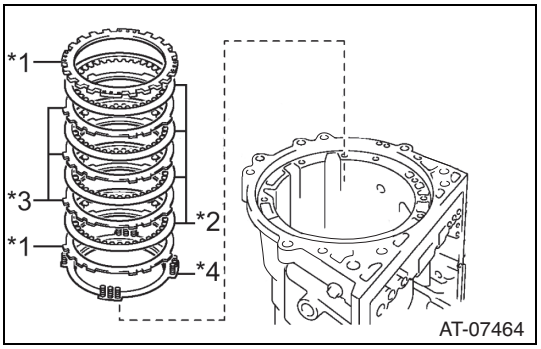

(2) Install 2 No.2 brake flanges, 4 No.2 brake discs, and 3 No.2 brake plates to the automatic transmission case SUB-ASSY.

Captions in illustration

*1	No.2 brake flange
*2	No.2 brake disc
*3	No.2 brake plate
*4	Brake piston return spring

Installation order: *1 - *2 - *3 - *2 - *3 - *2 - *3 - *2 - *1

CAUTION:

Check that the disc, plate, and flange are installed in the correct order.

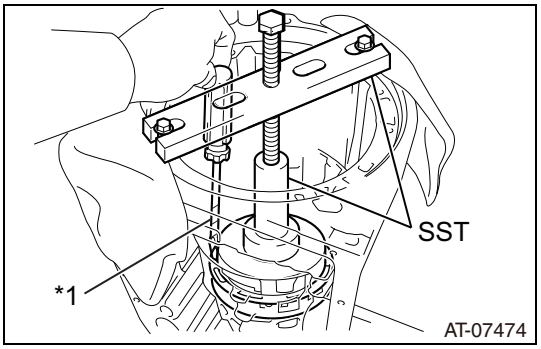

(3) Use the SST and a flat tip screwdriver to press the No.2 brake piston return spring SUB-ASSY and install the snap ring to the automatic transmission case SUB-ASSY.

Captions in illustration

*1	Protective tape

SST 09351-04010, 09350-07020, 18762AA020

CAUTION:

Insert a cloth, etc. between the SST and transmission case to prevent damage to the case.

NOTE:

Wrap the tip of a flat tip screwdriver with tape before using it.

17. Check of piston stroke of No.2 brake piston (refer to AT - 271)

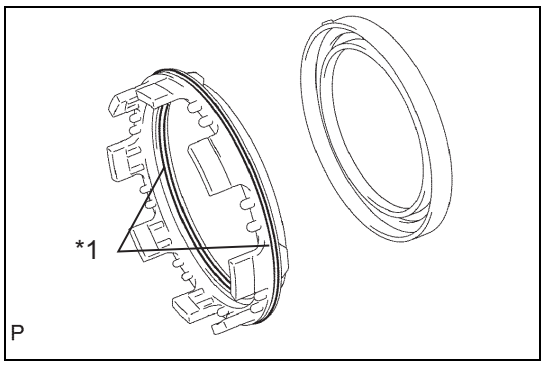

18. Installation of No.1 brake piston

(1) Apply ATF to 2 new O-rings and install them to the No.1 brake piston.

Captions in illustration

*1	O-ring

(2) Press the No.1 brake piston into the No.1 brake cylinder.

CAUTION:

Be careful not to damage the O-ring.

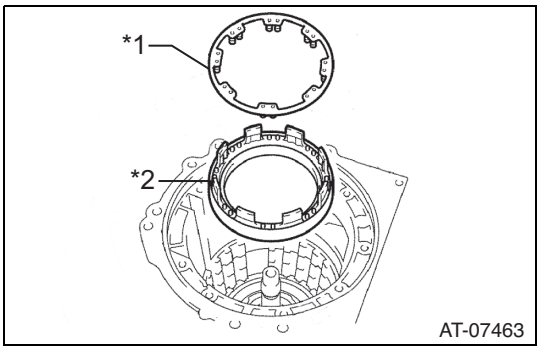

19. Installation of brake piston return spring SUB-ASSY

(1) Install the brake piston return spring SUB-ASSY and No.1 brake cylinder to the automatic transmission case SUB-ASSY.

Captions in illustration

*1	Brake piston return spring SUB-ASSY
*2	No.1 brake cylinder

NOTE:

Install the No.1 brake cylinder so that the protrusion protrudes from the upper side of the automatic transmission case SUB-ASSY.

AT

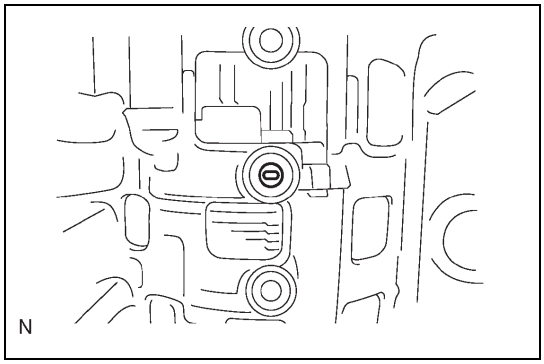

(2) Check that the oil pressure apply hole of the No.1 brake cylinder is aligned with the oil pressure apply hole of the automatic transmission case SUB-ASSY.

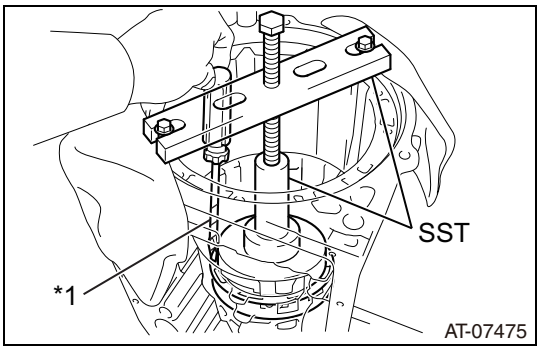

(3) Use the SST and a flat tip screwdriver to press the brake piston return spring SUB-ASSY and install the snap ring to the automatic transmission case SUB-ASSY.

Captions in illustration

*1	Protective tape

SST 09350-07020, 09351-04010, 09351-04020

CAUTION:

- Align the centers of the SST and the shaft to prevent the SST from contacting the No.1 brake cylinder.
- Insert a cloth, etc. between the SST and transmission case to prevent damage to the case.

NOTE:

Wrap the tip of a flat tip screwdriver with tape before using it.

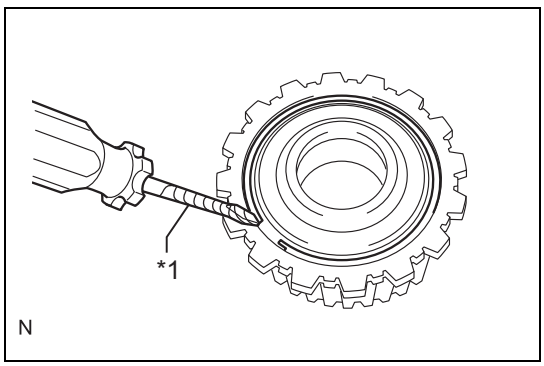

20. Installation of center planetary ring gear

(1) Install the front planetary ring gear flange SUB-ASSY to the center planetary ring gear.

Captions in illustration

*1	Protective tape

(2) Use a flat tip screwdriver to install the snap ring.

CAUTION:

Be careful not to damage the center planetary ring gear.

NOTE:

Wrap the tip of a flat tip screwdriver with tape before using it.

(3) Install the center planetary ring gear to the front planetary ring gear.

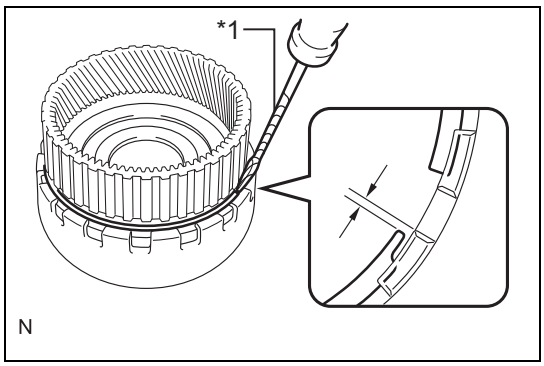

(4) Use a flat tip screwdriver to install the snap ring.

Captions in illustration

*1	Protective tape

CAUTION:

- Be careful not to damage the front planetary ring gear.
- Install the snap ring to the front planetary ring gear so that the both ends of the snap ring is positioned to the center of the protrusion on the front planetary ring gear.

NOTE:

Wrap the tip of a flat tip screwdriver with tape before using it.

AT

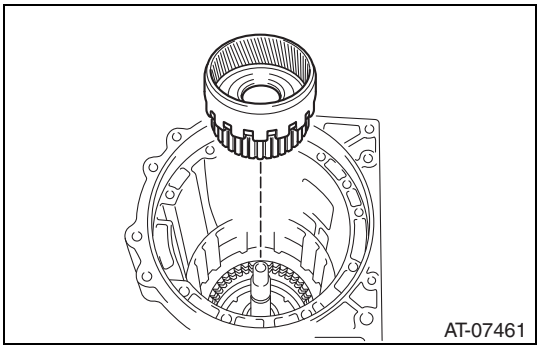

21. Installation of front planetary ring gear
    (1) Install the front planetary ring gear to the automatic transmission case SUB-ASSY.

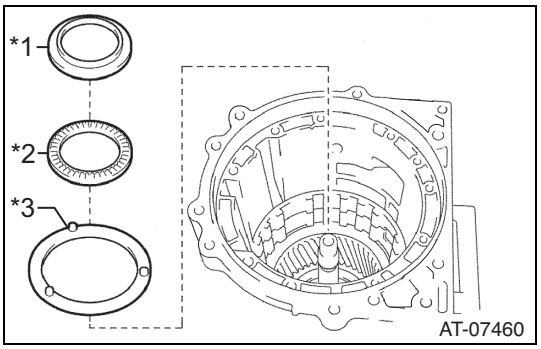

22. Installation of front planetary gear ASSY
    (1) Install the No.2 planetary carrier thrust washer and front planetary flange thrust needle roller bearing.

Captions in illustration

*1	Front planetary flange rear thrust bearing race
*2	Front planetary flange thrust needle roller bearing
*3	No.2 planetary carrier thrust washer

Bearing and race diameter

Item	Inner	Outer
Front planetary flange thrust needle roller bearing	38.6mm {1.520in}	53.1mm {2.091in}
Front planetary flange rear thrust bearing race	34.9mm {1.374in}	50.8mm {1.999in}

    (2) Apply petroleum jelly to the front planetary flange rear thrust bearing race and install it on the front planetary ring gear.

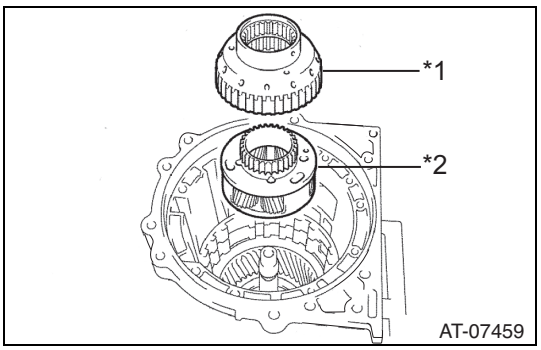

    (3) Install the front planetary gear ASSY and one-way clutch inner race SUB-ASSY to the automatic transmission case SUB-ASSY.

Captions in illustration

*1	One-way clutch inner race SUB-ASSY
*2	Front planetary gear ASSY

23. Check of piston stroke of No.1 brake piston (refer toAT - 273)

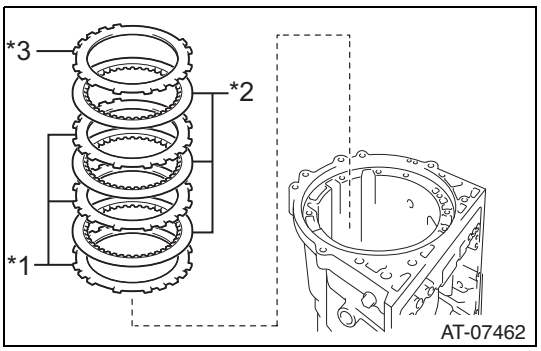

24. Installation of No.1 brake disc
    (1) Install No.1 brake flange, 3 No.1 brake discs, and 3 No.1 brake plates to the automatic transmission case SUB-ASSY.

Captions in illustration

*1	No.1 brake plate
*2	No.1 brake disc
*3	No.1 brake flange

Installation order: *1 - *2 - *1 - *2 - *1 - *2 - *3

CAUTION:
Check that the disc, plate, and flange are installed in the correct order.

AT

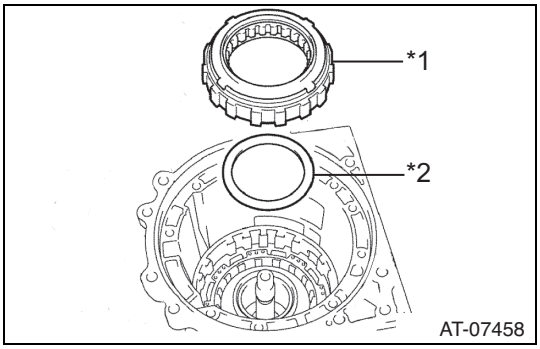

25. Installation of one-way clutch ASSY
    (1) Install the No.1 planetary carrier thrust washer and one-way clutch ASSY to the automatic transmission case SUB-ASSY.

Captions in illustration

*1	One-way clutch ASSY
*2	No.1 planetary carrier thrust washer

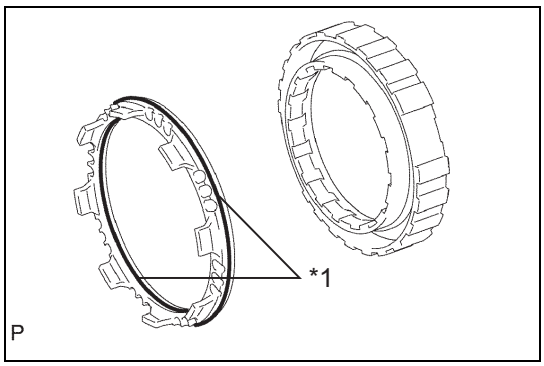

26. Installation of No.3 brake piston
    (1) Apply ATF to 2 new O-rings and install them to the No.3 brake piston.

Captions in illustration

*1	O-ring

    (2) Press the No.3 brake piston into the No.3 brake cylinder.
    CAUTION:
    Be careful not to damage the O-ring.

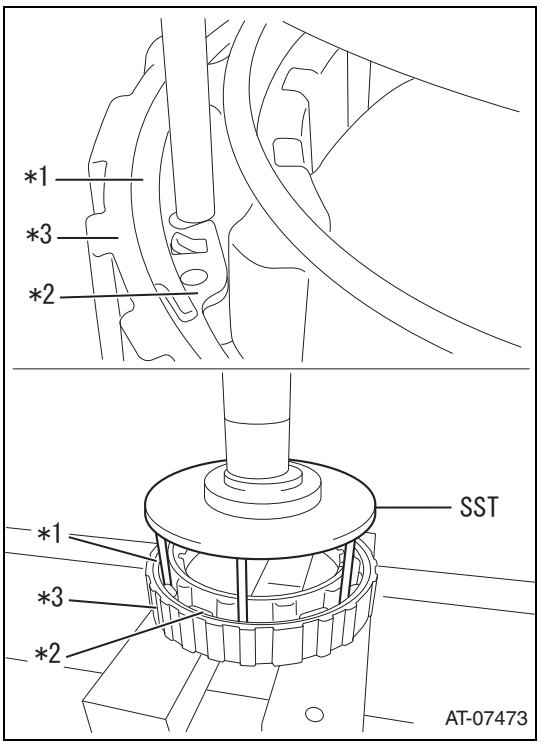

    (3) Use the SST and a press to install the snap ring and No.3 brake piston return spring SUB-ASSY to the No.3 brake cylinder.

Captions in illustration

*1	Snap ring
*2	No.3 Brake piston return spring SUB-ASSY
*3	No.3 brake cylinder

    SST 18762AA030
    CAUTION:
    - Check that the gap of the snap ring end is not aligned with the claw of the spring retainer.
    - Be careful not to damage the No.3 brake cylinder.
    - Keep the foot of SST from standing on the protrusion of the piston return spring SUB-ASSY.

    NOTE:
    Wrap the tip of a flat tip screwdriver with tape before using it.

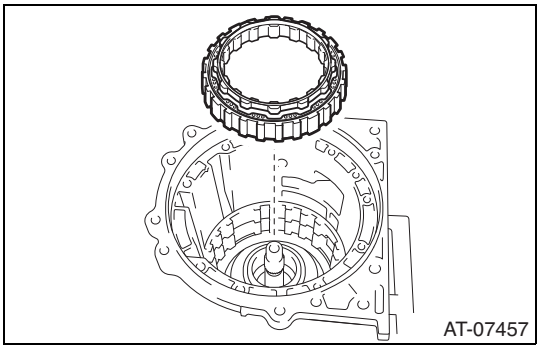

27. Installation of No.3 brake cylinder
    (1) Install the No.3 brake cylinder to the automatic transmission case SUB-ASSY.

AT

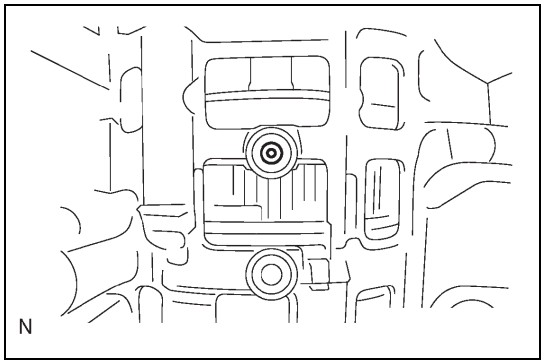

(2) Check that the oil pressure apply hole of the No.3 brake cylinder is aligned with the oil pressure apply hole of the automatic transmission case SUB-ASSY.

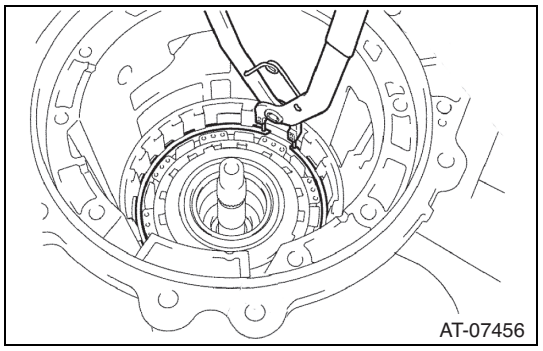

(3) Install the snap ring to the automatic transmission case SUB-ASSY.
NOTE:
Install the joint of the snap ring toward the control valve side.

28. Installation of No.3 brake disc set

(1) Install No.3 brake flange, 3 No.3 brake discs, and 3 No.3 brake plates to the automatic transmission case SUB-ASSY.

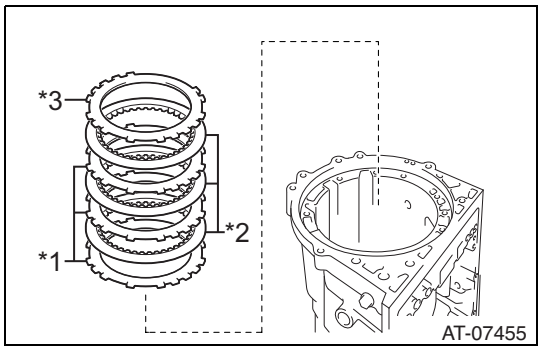

Captions in illustration

*1	No.3 brake plate
*2	No.3 brake disc
*3	No.3 brake flange

Installation order: *1 - *2 - *1 - *2 - *1 - *2 - *3
CAUTION:
Check that the disc, plate, and flange are installed in the correct order.

(2) Use a flat tip screwdriver to install the snap ring to the automatic transmission case SUB-ASSY.

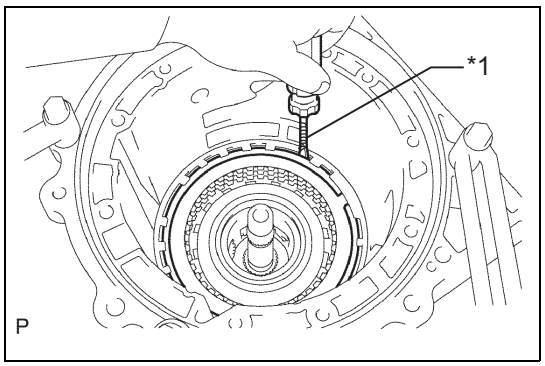

Captions in illustration

*1	Protective tape

CAUTION:
Be careful not to damage the automatic transmission case SUB-ASSY.
NOTE:
Wrap the tip of a flat tip screwdriver with tape before using it.

29. Installation of direct clutch piston SUB-ASSY

(1) Apply ATF to 2 new O-rings and install them to the direct clutch piston SUB-ASSY.

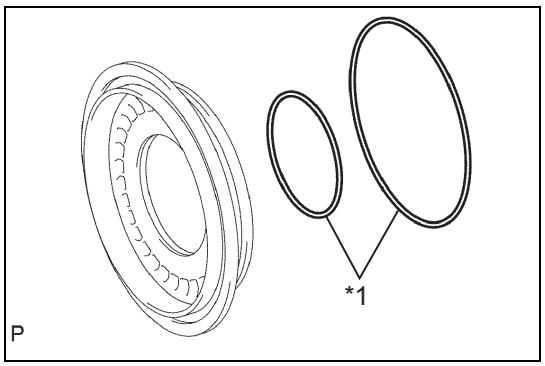

Captions in illustration

*1	O-ring

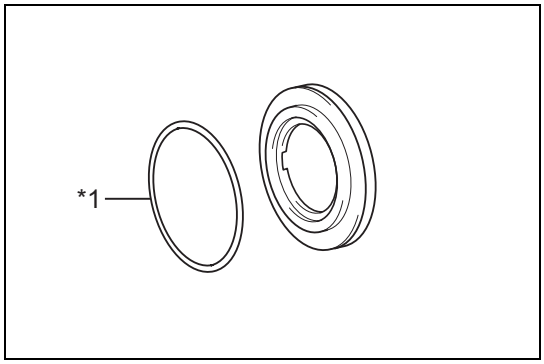

(2) Apply ATF to a new O-ring and install it to the No.2 clutch balancer.

Captions in illustration

*1	O-ring

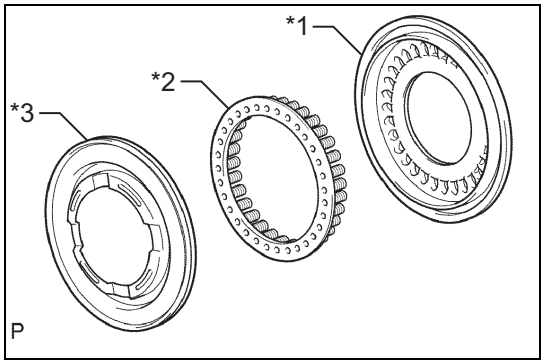

(3) Install the No.2 clutch balancer and direct clutch return spring SUB-ASSY to the direct clutch piston SUB-ASSY.

Captions in illustration

*1	Direct clutch piston SUB-ASSY
*2	Direct clutch return spring SUB-ASSY
*3	No.2 clutch balancer

(4) Push the direct clutch piston SUB-ASSY into the reverse clutch drum SUB-ASSY by hand.
CAUTION:
Be careful not to damage the O-ring.

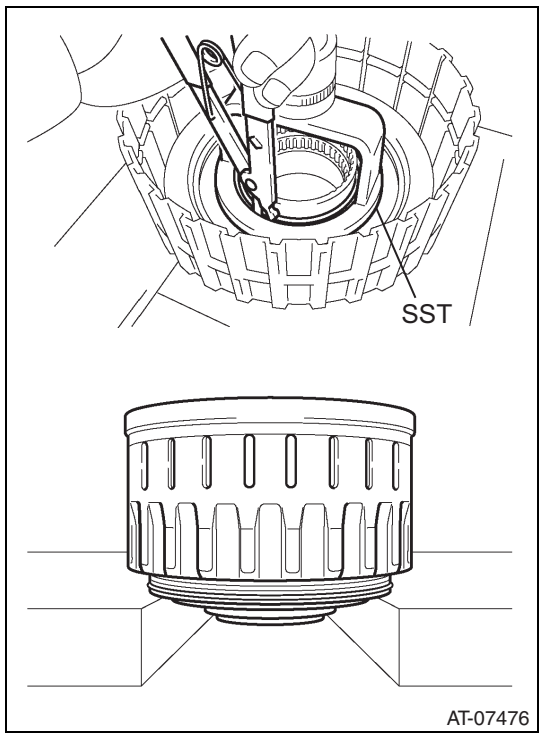

(5) Place the SST on the No.2 clutch balancer and press the direct clutch return spring SUB-ASSY using a press.
SST 09320-89010
CAUTION:
To avoid the deformation of the spring seat, stop pressing the spring seat when it descends to 1 to 2 mm {0.0394 to 0.0787 in} from the groove of the snap ring.

(6) Install the snap ring.
CAUTION:
- Check that the gap of the snap ring end is not aligned with the claw of the spring retainer.
- Do not stretch the snap ring excessively.

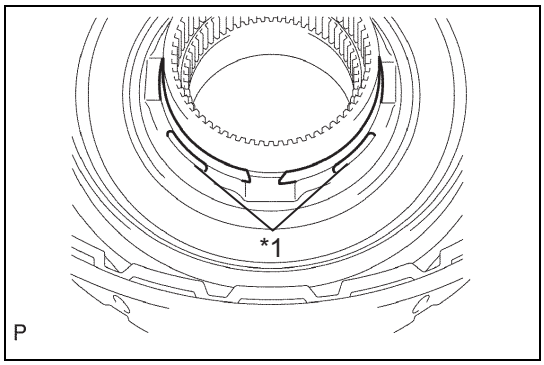

(7) Insert the gap of the snap ring end into the No.2 clutch balancer as shown in the figure.

Captions in illustration

*1	Stopper

AT

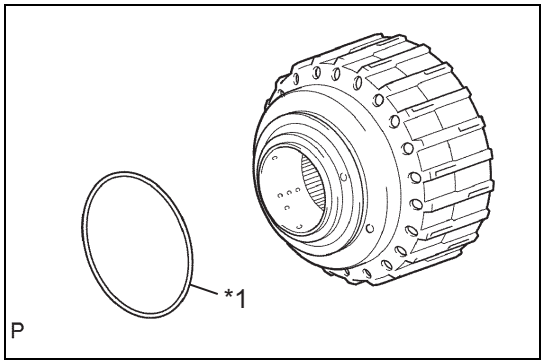

30. Installation of reverse clutch piston SUB-ASSY
    (1) Apply ATF to a new O-ring and install it to the reverse clutch drum SUB-ASSY.

Captions in illustration

*1	O-ring

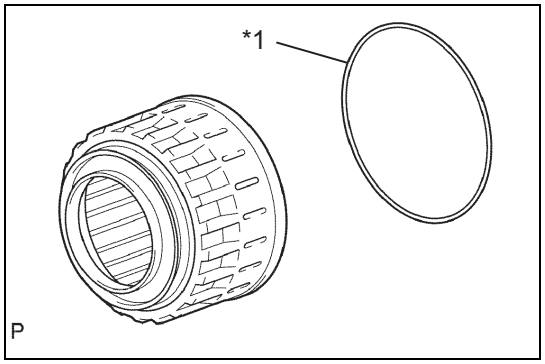

    (2) Apply ATF to a new O-ring and install it to the reverse clutch piston SUB-ASSY.

Captions in illustration

*1	O-ring

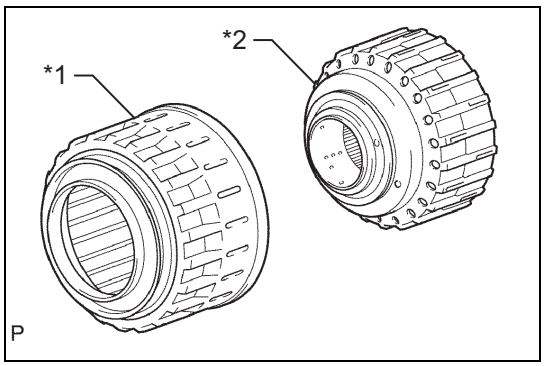

    (3) Push the reverse clutch drum SUB-ASSY into the reverse clutch piston SUB-ASSY by both hands.

Captions in illustration

*1	Reverse clutch piston SUB-ASSY
*2	Reverse clutch drum SUB-ASSY

CAUTION:
Be careful not to damage the O-ring.

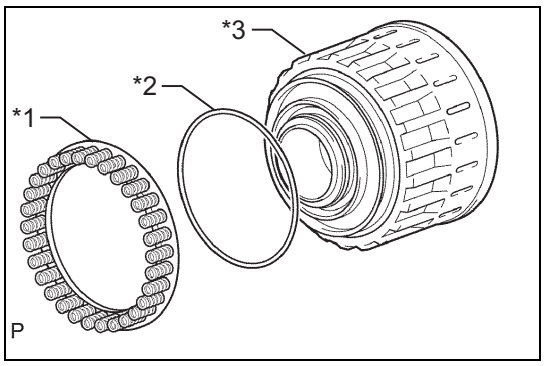

31. Installation of reverse clutch return spring SUB-ASSY
    (1) Apply ATF to a new O-ring and install it to the reverse clutch piston SUB-ASSY.

Captions in illustration

*1	Reverse clutch return spring SUB-ASSY
*2	O-ring
*3	Reverse clutch piston SUB-ASSY

    (2) Install the reverse clutch return spring SUB-ASSY to the reverse clutch piston SUB-ASSY.

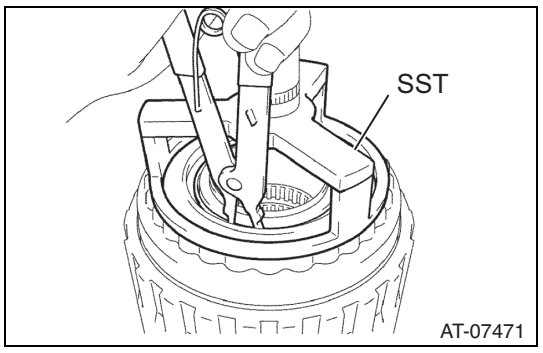

32. Installation of No.3 clutch balancer
    (1) Install the No.3 clutch balancer to the reverse clutch return spring SUB-ASSY.
    (2) Place the SST on the No.3 clutch balancer and press the reverse clutch return spring SUB-ASSY using a press.
    SST 09387-00070
    CAUTION:
    To avoid the deformation of the spring seat, stop pressing the spring seat when it descends to 1 to 2 mm {0.0394 to 0.0787 in} from the groove of the snap ring.
    (3) Install the snap ring.

CAUTION:
- Check that the gap of the snap ring end is not aligned with the claw of the spring retainer.
- Do not stretch the snap ring excessively.

(4) Insert the gap of the snap ring end into the No.3 clutch balancer as shown in the figure.

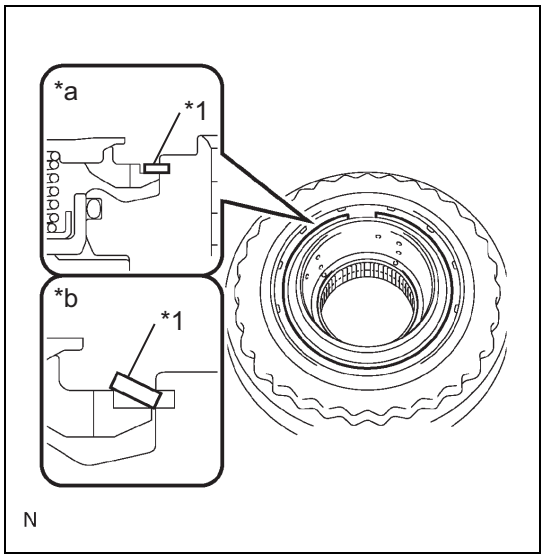

Captions in illustration

*1	Snap ring
*a	Correct
*b	Wrong

33. Installation of No.2 clutch disc (direct clutch disc)

(1) Install the direct clutch flange, 5 No.2 clutch discs, and 5 No.2 clutch plates to the reverse clutch drum SUB-ASSY.

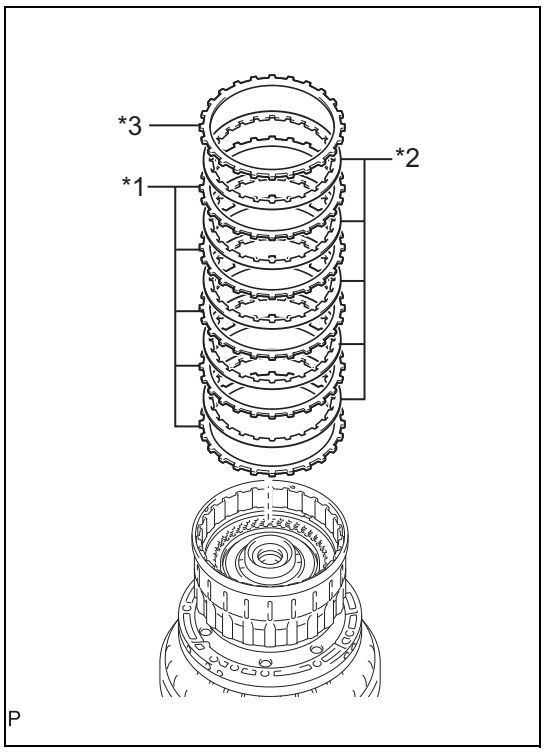

Captions in illustration

*1	No.2 clutch plate
*2	No.2 clutch disc
*3	Direct clutch flange

Installation order: *1 - *2 - *1 - *2 - *1 - *2 - *1 - *2 - *1 - *2 - *3

CAUTION:
Check that the disc, plate, and flange are installed in the correct order.

AT

(2) Use a flat tip screwdriver to install 2 snap rings to the reverse clutch drum SUB-ASSY.

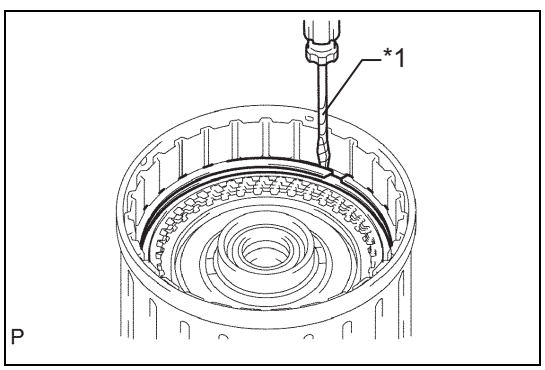

Captions in illustration

*1	Protective tape

CAUTION:
Be careful not to damage the reverse clutch drum SUB-ASSY.
NOTE:
Wrap the tip of a flat tip screwdriver with tape before using it.

34. Check of No.2 clutch pack clearance (refer toAT - 277)

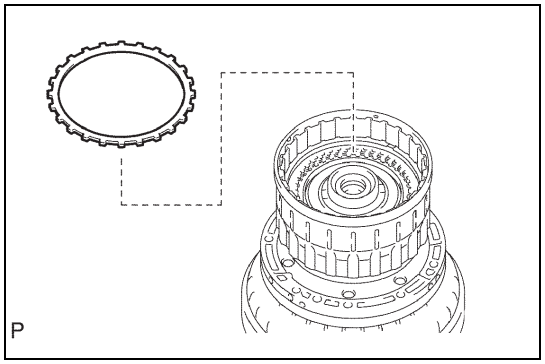

35. Installation of reverse clutch flange
    (1) Install the reverse clutch flange to the reverse clutch drum SUB-ASSY.

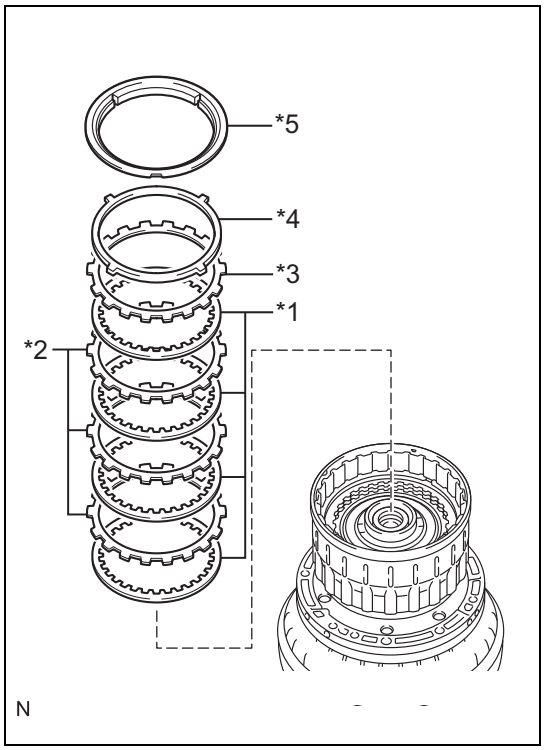

36. Installation of reverse clutch reaction sleeve
    (1) Install the clutch cushion plate, reverse clutch flange, 4 No.3 clutch discs, 3 No.3 clutch plates, and reverse clutch reaction sleeve to the reverse clutch drum SUB-ASSY.

Captions in illustration

*1	No.3 clutch disc
*2	No.3 clutch plate
*3	Reverse clutch flange
*4	Clutch cushion plate
*5	Reverse clutch reaction sleeve

Installation order: *1 - *2 - *1 - *2 - *1 - *2 - *1 - *3 - *4 - *5

CAUTION:
Check that the disc, plate, flange, sleeve, and cushion plate are installed in the correct order.

AT

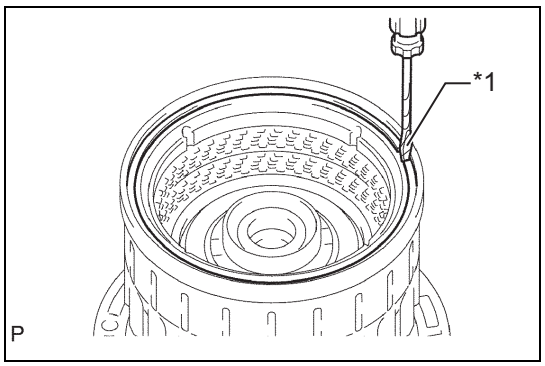

(2) Use a flat tip screwdriver to install the snap ring to the reverse clutch piston SUB-ASSY.

Captions in illustration

*1	Protective tape

CAUTION:
Be careful not to damage the reverse clutch piston SUB-ASSY.
NOTE:
Wrap the tip of a flat tip screwdriver with tape before using it.

37. Check of No.3 clutch pack clearance (refer toAT - 277)

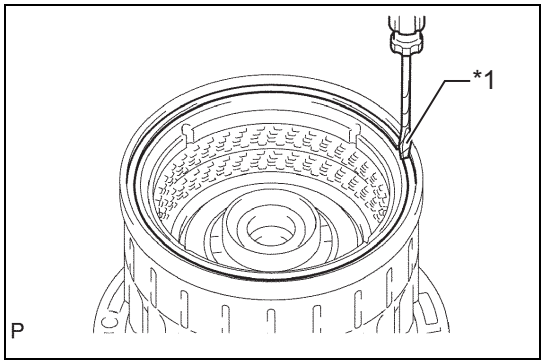

38. Removal of reverse clutch reaction sleeve
    (1) Use a flat tip screwdriver to remove the snap ring from the reverse clutch piston SUB-ASSY.

Captions in illustration

*1	Protective tape

CAUTION:
Be careful not to damage the reverse clutch piston SUB-ASSY.
NOTE:
Wrap the tip of a flat tip screwdriver with tape before using it.

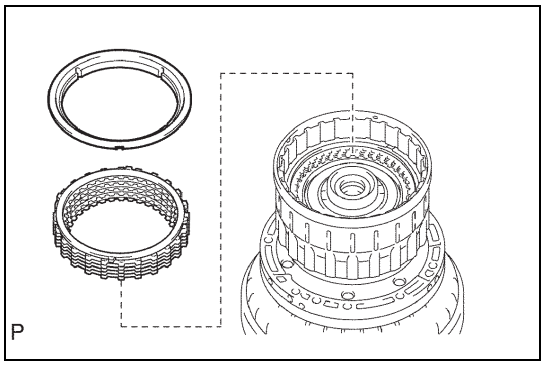

(2) Remove the reverse clutch reaction sleeve, clutch cushion plate, reverse clutch flange, 4 No.3 clutch discs, and 3 No.3 clutch plates from the reverse clutch drum SUB-ASSY.

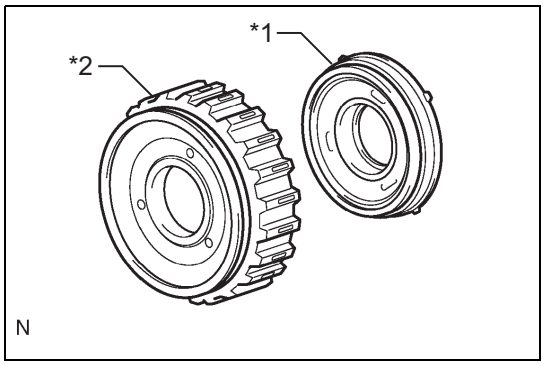

39. Installation of forward clutch piston SUB-ASSY
    (1) Install the coast clutch piston to the forward clutch piston SUB-ASSY.

Captions in illustration

*1	Coast clutch piston
*2	Forward clutch piston SUB-ASSY

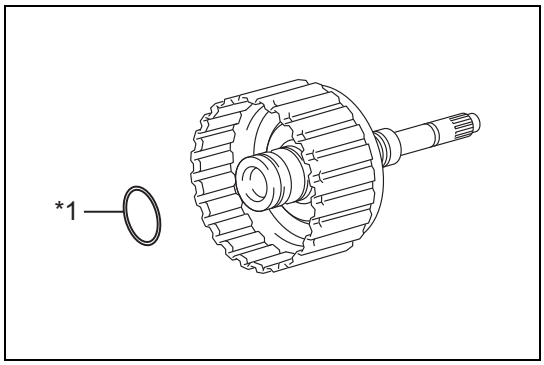

(2) Apply ATF to a new O-ring and install it to the input shaft.

Captions in illustration

*1	O-ring

(3) Install the forward clutch piston SUB-ASSY to the input shaft.

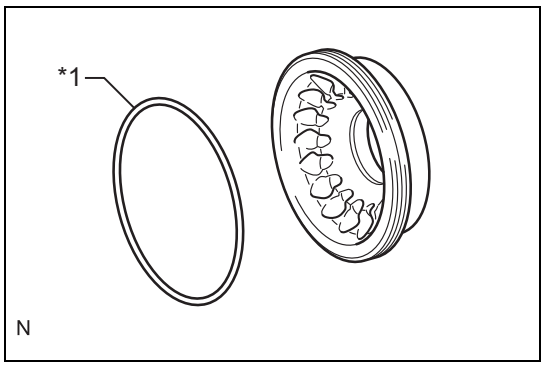

40. Installation of No.1 clutch balancer
    (1) Apply ATF to a new D-ring and install it to the No.1 clutch balancer.

Captions in illustration

*1	D-ring

AT

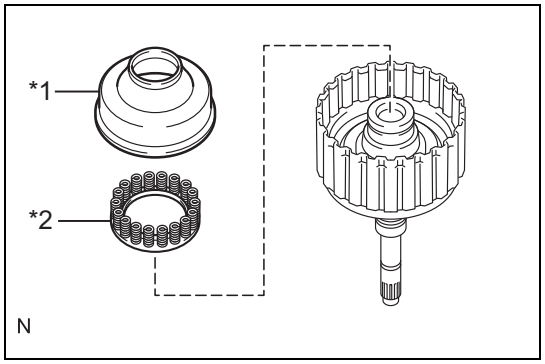

(2) Install the No.1 clutch balancer and forward clutch return spring SUB-ASSY to the input shaft.

Captions in illustration

*1	No.1 clutch balancer
*2	Forward clutch return spring SUB-ASSY

CAUTION:
Be careful not to damage the D-ring.

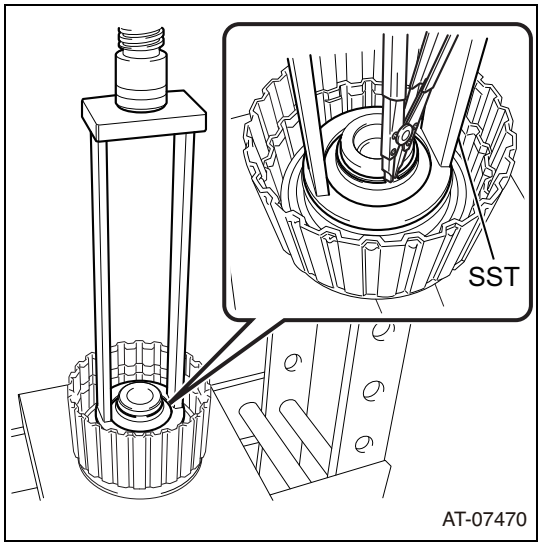

(3) Place the SST on the No.1 clutch balancer and press the forward clutch return spring SUB-ASSY using a press.
SST 09387-00110
CAUTION:
To avoid the deformation of the spring seat, stop pressing the spring seat when it descends to 1 to 2 mm {0.0394 to 0.0787 in} from the groove of the snap ring.

(4) Install the snap ring.
CAUTION:
- Check that the gap of the snap ring end is not aligned with the claw of the spring retainer.
- Do not stretch the snap ring excessively.

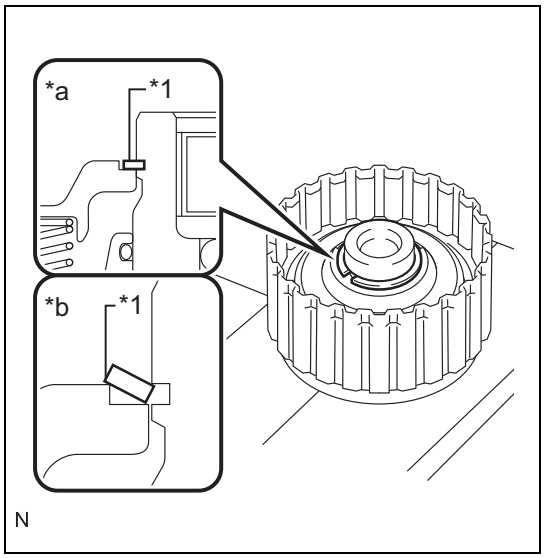

(5) Insert the gap of the snap ring end into the No.1 clutch balancer as shown in the figure.

Captions in illustration

*1	Snap ring
*a	Correct
*b	Wrong

AT

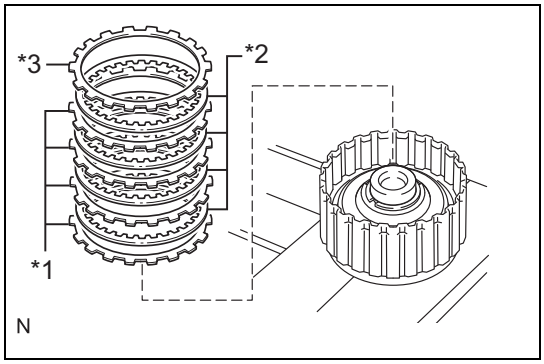

41. Installation of No.4 clutch disc (coast clutch disc)
    (1) Install the coast clutch flange, 4 No.4 clutch discs, and 4 No.4 clutch plates to the forward clutch piston SUB-ASSY.

Captions in illustration

*1	No.4 clutch plate
*2	No.4 clutch disc
*3	Coast clutch flange

Installation order: *1 - *2 - *1 - *2 - *1 - *2 - *1 - *2 - *3

CAUTION:

Check that the disc, plate, and flange are installed in the correct order.

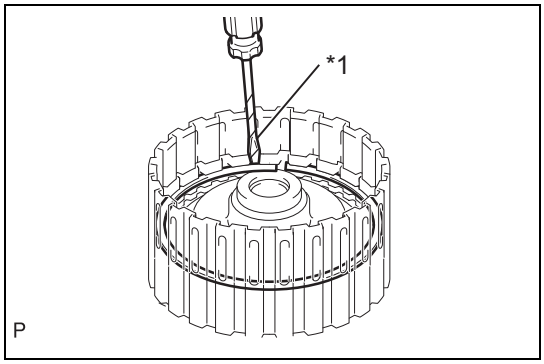

(2) Use a flat tip screwdriver to install the snap ring.

Captions in illustration

*1	Protective tape

CAUTION:

Be careful not to damage the forward clutch piston SUB-ASSY.

NOTE:

Wrap the tip of a flat tip screwdriver with tape before using it.

42. Check of No.4 clutch pack clearance (refer toAT - 280)

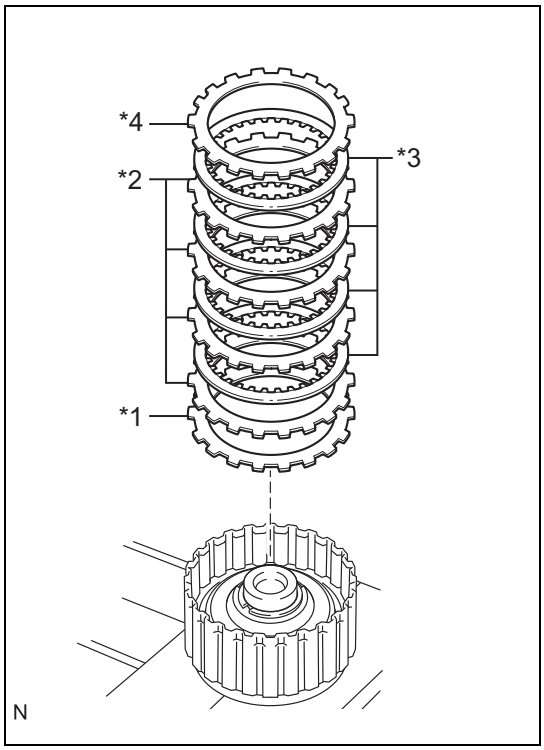

43. Installation of No.1 clutch disc (forward clutch disc)
    (1) Install the forward clutch flange, 4 No.1 clutch discs, 4 No.1 clutch plates, and clutch cushion plate to the input shaft.

Captions in illustration

*1	Clutch cushion plate
*2	No.1 clutch plate
*3	No.1 clutch disc
*4	Forward clutch flange

Installation order: *1 - *2 - *3 - *2 - *3 - *2 - *3 - *2 - *3 - *4

CAUTION:

Check that the disc, plate, flange, and cushion plate are installed in the correct order.

AT

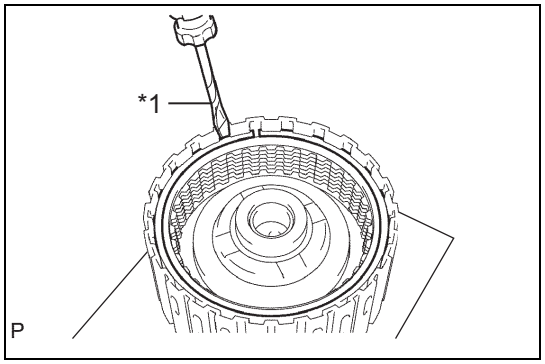

(2) Use a flat tip screwdriver to install the snap ring.

Captions in illustration

*1	Protective tape

CAUTION:
Be careful not to damage the input shaft.
NOTE:
Wrap the tip of a flat tip screwdriver with tape before using it.

44. Check of No.1 clutch pack clearance (refer toAT - 279)

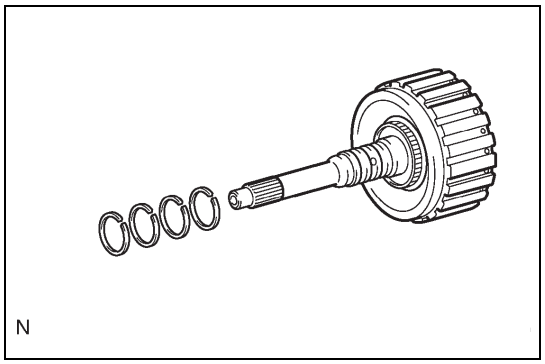

45. Installation of clutch drum oil seal ring
    (1) Apply ATF to 4 new clutch drum oil seal rings.
    (2) Push out both ends of the 4 clutch drum oil seal rings all together and install them to the input shaft groove.
    CAUTION:
    Do not stretch the ring ends excessively.
    NOTE:
    After installing the clutch drum oil seal rings, check that they can rotate smoothly.

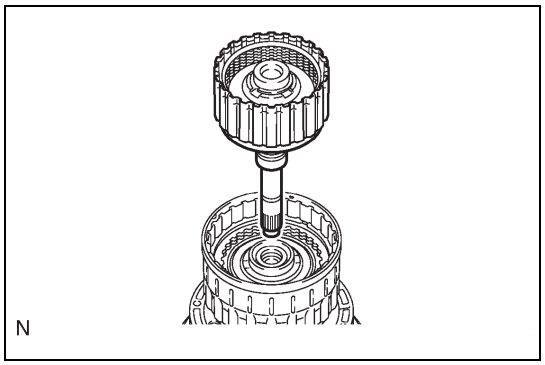

46. Installation of input shaft
    (1) Install the input shaft to the reverse clutch drum SUB-ASSY.

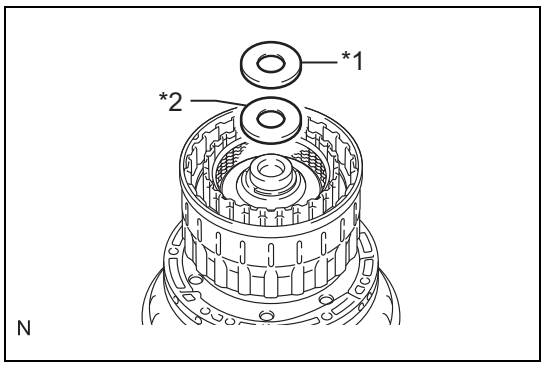

(2) Install the input shaft rear thrust bearing race and thrust needle roller bearing to the input shaft.

Captions in illustration

*1	Thrust needle roller bearing
*2	Input shaft rear thrust bearing race

Bearing and race diameter

Item	Inner	Outer
Thrust needle roller bearing	50.8mm {1.999in}	41.0mm {1.614in}
Input shaft rear thrust bearing race	20.0mm {0.787in}	35.6mm {1.402in}

AT

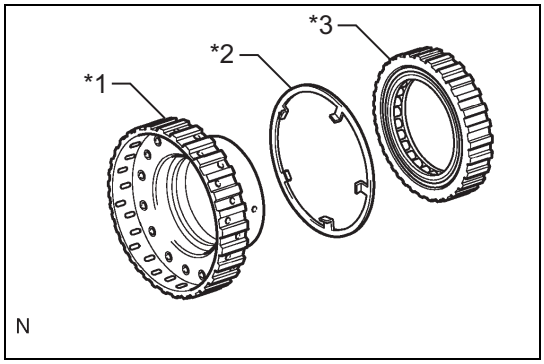

47. Installation of No.4 one-way clutch ASSY
    (1) Install the No.2 clutch hub thrust washer and No.4 one-way clutch ASSY to the coast clutch hub ASSY.

Captions in illustration

*1	Coast clutch hub SUB-ASSY
*2	No.2 clutch hub thrust washer
*3	No.4 one-way clutch ASSY

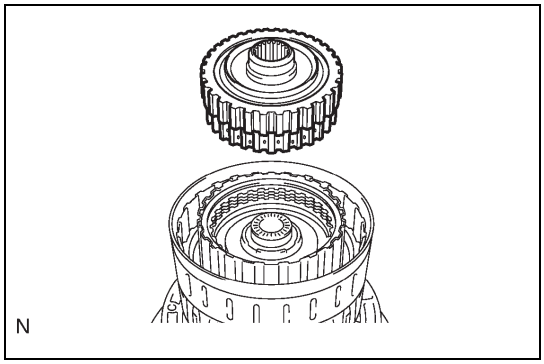

48. Installation of coast clutch hub SUB-ASSY
    (1) Install the coast clutch hub SUB-ASSY to the reverse clutch drum SUB-ASSY.

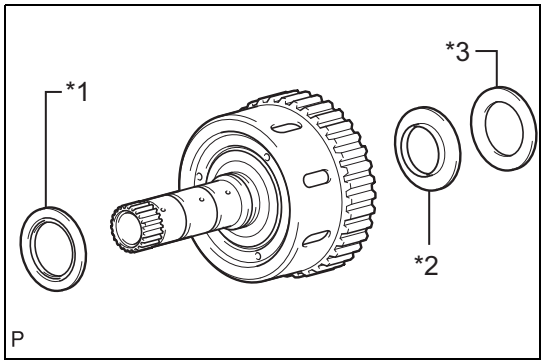

49. Installation of forward clutch hub SUB-ASSY
    (1) Install the 2 thrust needle roller bearings and No.2 thrust bearing race to the forward clutch hub ASSY.

Captions in illustration

*1	Thrust needle roller bearing A
*2	Thrust needle roller bearing B
*3	No. 2 thrust bearing race

Bearing and race diameter

Item	Inner	Outer
Thrust needle roller bearing A	42.5mm {1.673in}	61.2mm {2.409in}
Thrust needle roller bearing B	33.3mm {1.311in}	51.2mm {2.016in}
No. 2 thrust bearing race	31.0mm {1.220in}	48.0mm {1.890in}

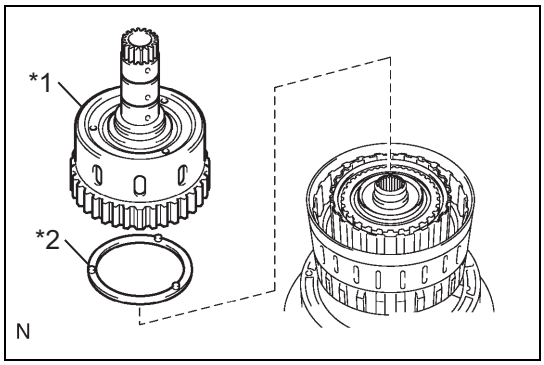

    (2) Install the No.3 clutch hub thrust washer and forward clutch hub SUB-ASSY to the reverse clutch drum SUB-ASSY.

Captions in illustration

*1	Forward clutch hub SUB-ASSY
*2	No.3 clutch hub thrust washer

AT

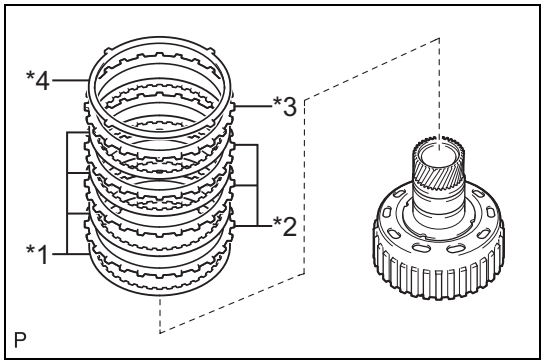

50. Installation of No.3 clutch disc
    (1) Install the clutch cushion plate, reverse clutch flange, 4 No.3 clutch discs, and 3 No.3 clutch plates to the reverse clutch hub SUB-ASSY.

Captions in illustration

*1	No.3 clutch disc
*2	No.3 clutch plate
*3	Reverse clutch flange
*4	Clutch cushion plate

Installation order:: *1 - *2 - *1 - *2 - *1 - *2 - *1 - *3 - *4

CAUTION:
Check that the disc, plate, flange, and cushion plate are installed in the correct order.

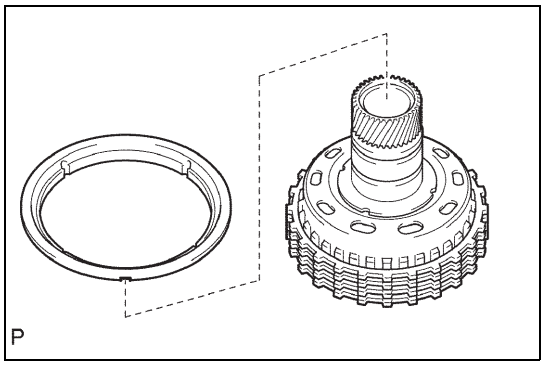

51. Installation of reverse clutch reaction sleeve
    (1) Install the reverse clutch reaction sleeve to the reverse clutch hub SUB-ASSY.

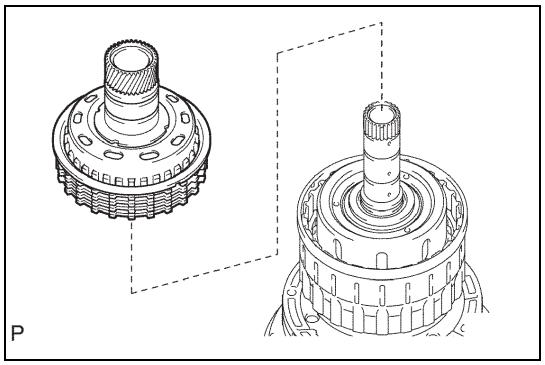

52. Installation of reverse clutch hub SUB-ASSY
    (1) Install the reverse clutch hub SUB-ASSY to the reverse clutch drum SUB-ASSY.

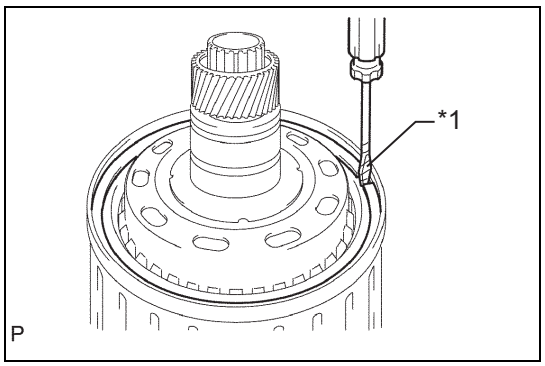

    (2) Use a flat tip screwdriver to install the snap ring to the reverse clutch piston SUB-ASSY.

Captions in illustration

*1	Protective tape

CAUTION:
Be careful not to damage the reverse clutch piston SUB-ASSY.
NOTE:
Wrap the tip of a flat tip screwdriver with tape before using it.

AT

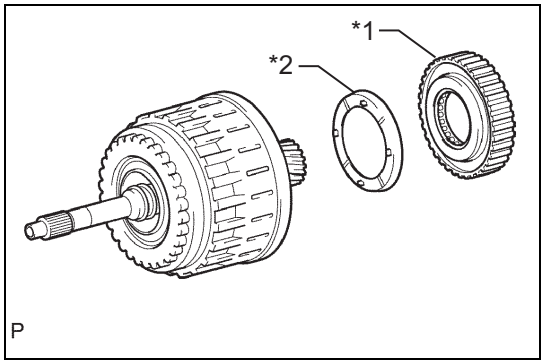

53. Installation of No.2 one-way clutch ASSY
    (1) Install the input shaft clutch drum thrust washer and No.2 one-way clutch ASSY to the clutch drum & input shaft ASSY.

Captions in illustration

*1	No.2 one-way clutch ASSY
*2	Input shaft clutch drum thrust washer

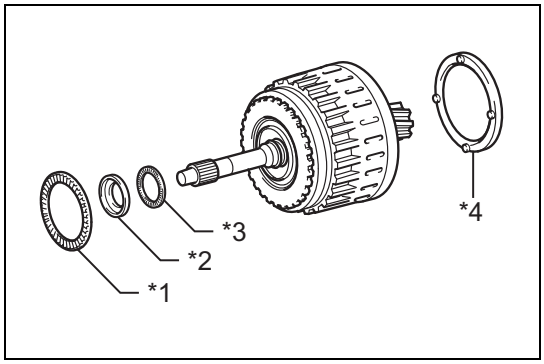

54. Installation of clutch drum & input shaft ASSY
    (1) Install the input shaft front thrust needle roller bearing and thrust needle roller bearing to the clutch drum & input ASSY.

Captions in illustration

*1	Thrust needle roller bearing
*2	Input shaft front thrust bearing race
*3	Input shaft front thrust needle roller bearing
*4	Clutch drum thrust washer

Bearing and race diameter

Item	Inner	Outer
Thrust needle roller bearing	71.9mm {2.831in}	85.6mm {3.370in}
Input shaft front thrust bearing race	37.0mm {1.457in}	51.2mm {2.016in}
Input shaft front thrust needle roller bearing	33.5mm {1.319in}	48.0mm {1.890in}

AT

    (2) Apply petroleum jelly to the input shaft front thrust bearing race and clutch drum thrust washer, and then install them on the clutch drum & input shaft ASSY.

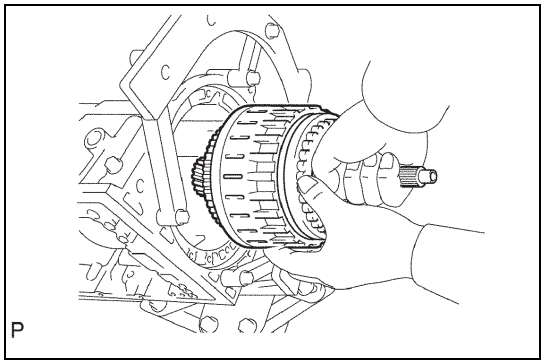

    (3) Install the clutch drum & input shaft ASSY to the automatic transmission case SUB-ASSY.

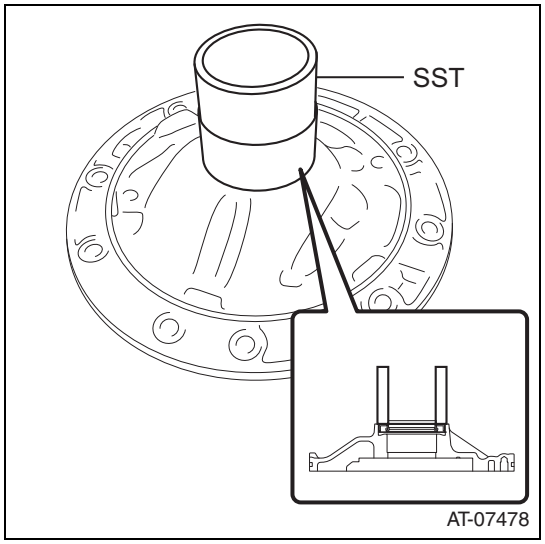

55. Installation of oil pump ASSY
    (1) Use the SST to install the oil seal to the oil pump.
        SST 499755602
    (2) Apply ATF to 3 new clutch drum oil seal rings.

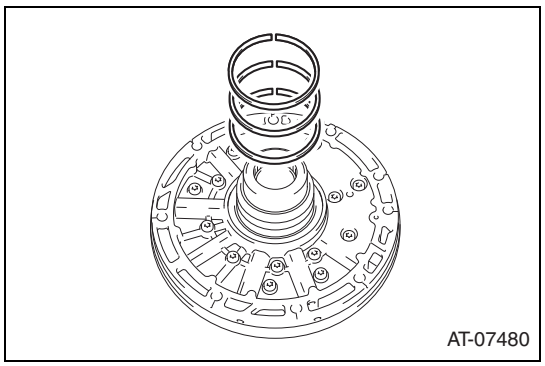

    (3) Push out both ends of the clutch drum oil seal ring until the gap length becomes 8 mm {0.31 in} or less and install it to the stator shaft groove.
        CAUTION:
        Do not stretch the ring ends excessively.
        NOTE:
        After installing the clutch drum oil seal rings, check that the seal ring can rotate smoothly.

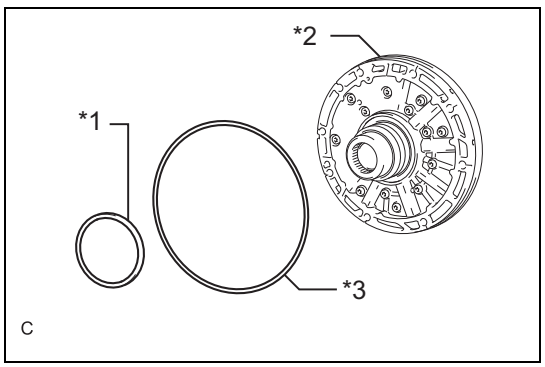

    (4) Install the No.1 thrust bearing race to the oil pump ASSY.

Captions in illustration

*1	No.1 thrust bearing race
*2	Oil pump ASSY
*3	O-ring

Race diameter

Item	Inner	Outer
No.1 thrust bearing race	74.2mm {2.921in}	87.7mm {3.453in}

    (5) Apply ATF to a new O-ring and install it to the oil pump ASSY.
    (6) Insert the oil pump ASSY into the input shaft and align the bolt hole of the oil pump ASSY with the automatic transmission case SUB-ASSY.
        CAUTION:
        Be careful not to damage the O-ring.
    (7) Hold the input shaft and press the oil pump lightly to slide the clutch drum oil seal ring into the clutch drum & input shaft ASSY.

AT

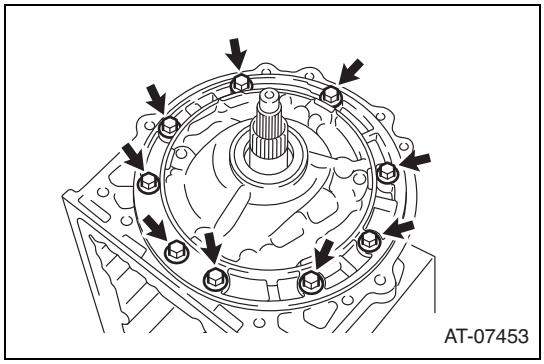

(8) Install 9 bolts.
Standard value:T=21N·m {215kgf·cm} {15.5ft·lbf}

56. Operation check of each piston (refer to AT - 275)

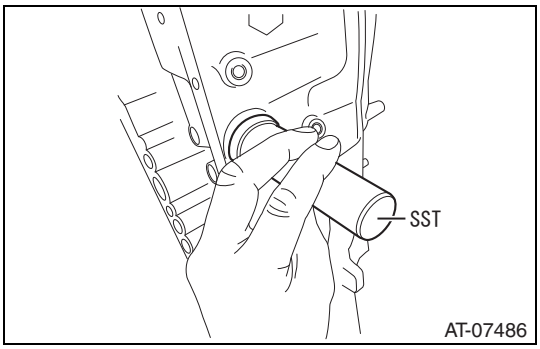

57. Installation of manual valve lever shaft oil seal
(1) Tap 2 manual valve lever shaft oil seals lightly to insert them into the automatic transmission case SUB-ASSY using the SST and a hammer.
SST 18657AA010
(2) Apply auto fluid WS to the manual valve lever shaft oil seal lip.

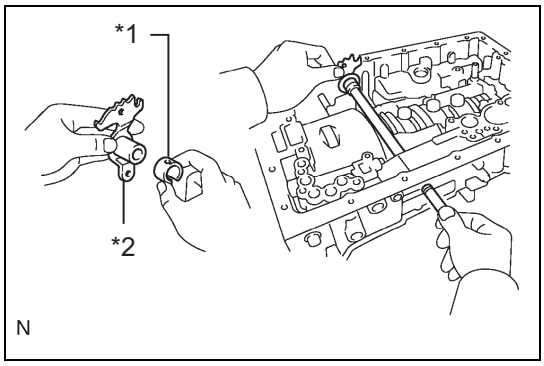

58. Installation of manual valve lever SUB-ASSY
(1) Install a new spacer to the manual valve lever SUB-ASSY.

Captions in illustration

*1	Spacer
*2	Manual valve lever SUB-ASSY

(2) Install the manual valve lever shaft to the automatic transmission case SUB-ASSY through the manual valve lever SUB-ASSY.

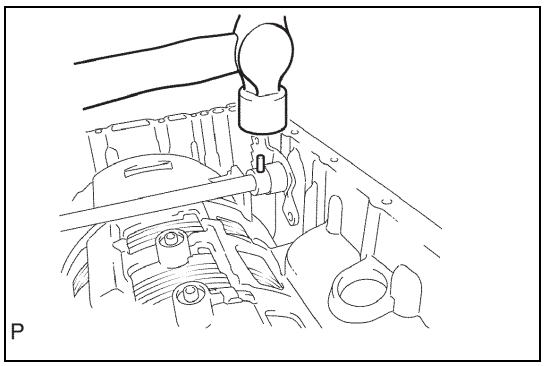

(3) Tap a new spring pin lightly to insert using a hammer.

AT

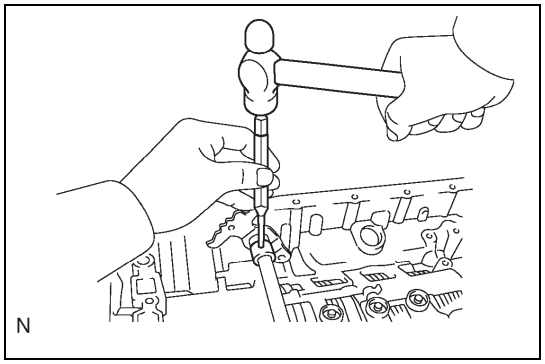

(4) Align the dent of the manual valve lever with the spacer hole and fix them together with a punch.
(5) Check that the shaft can rotate smoothly.

59. Installation of parking lock pole shaft
(1) Install a new E-ring to the parking lock pole shaft.

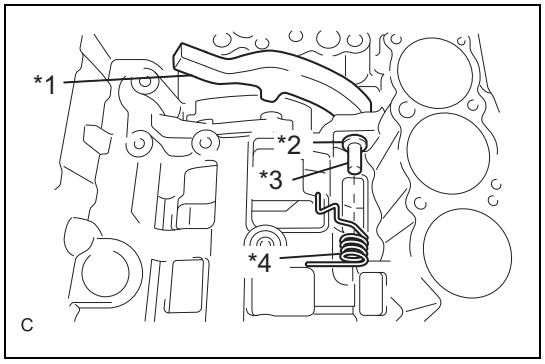

(2) Install the parking lock pole, parking lock pole shaft, and torsion spring to the automatic transmission case SUB-ASSY.

Captions in illustration

*1	Parking lock pole
*2	E-ring
*3	Parking lock pole shaft
*4	Torsion spring

AT

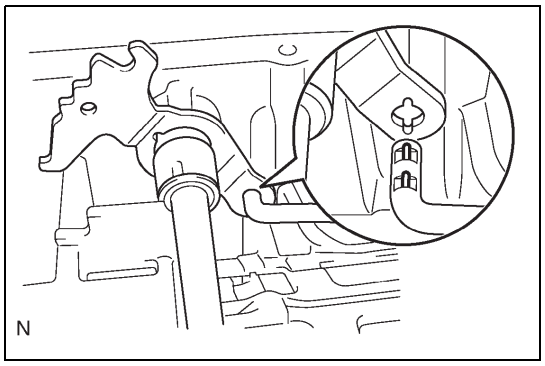

60. Installation of parking lock rod SUB-ASSY
(1) Install the parking lock rod SUB-ASSY to the manual valve lever SUB-ASSY.

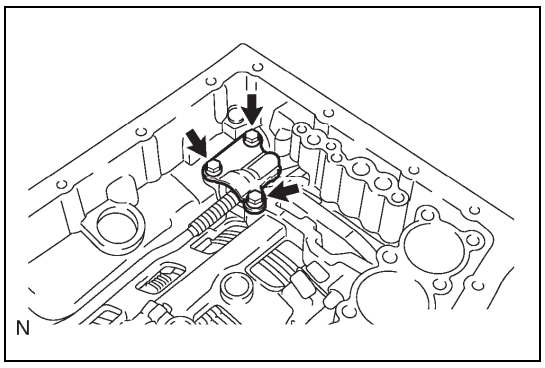

61. Installation of parking lock pole bracket
(1) Install the parking lock pole bracket to the automatic transmission case SUB-ASSY with 3 bolts.
Standard value:T=7.3N·m {74kgf·cm} {5.4ft·lbf}

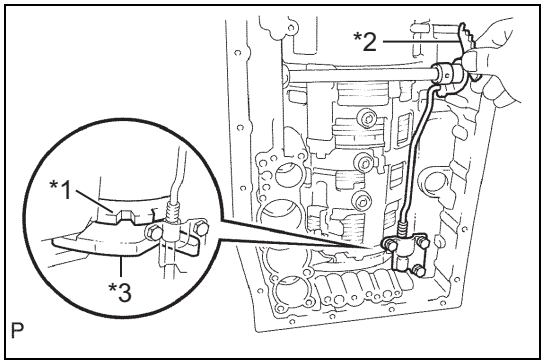

(2) Shift the manual valve lever SUB-ASSY to P position and check that the rear planetary gear is properly locked with the parking lock pole.

Captions in illustration

*1	Rear planetary gear
*2	Manual valve lever SUB-ASSY
*3	Parking lock pole

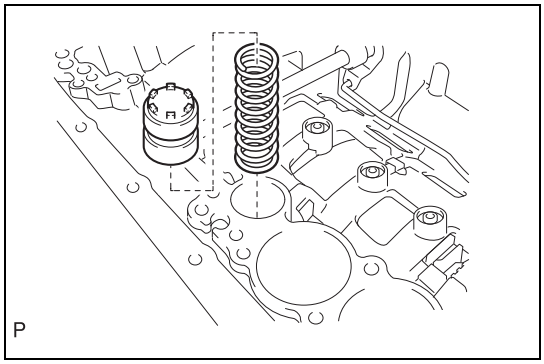

62. Installation of B-1 accumulator valve

(1) Install the spring and B-1 accumulator valve to the hole.

B-1 accumulator spring

Free length	Outer diameter	Color
46.36mm {1.825in}	17.1mm {0.673in}	Natural

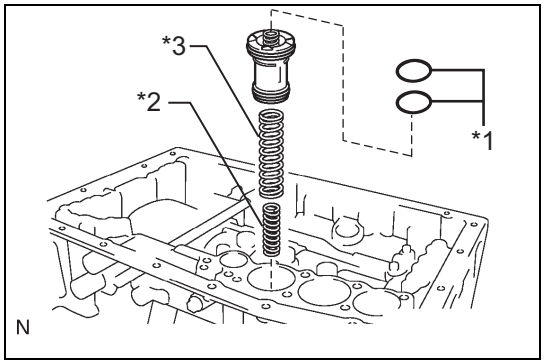

(2) Apply ATF to 2 new O-rings and install them to the C-3 accumulator piston.

Captions in illustration

*1	O-ring
*2	Inner spring
*3	Outer spring

(3) Install 2 springs and C-3 accumulator piston to the hole.

C-3 accumulator spring

Spring	Free length	Outer diameter	Color
Inner	44.0mm {1.732in}	14.0mm {0.551in}	Yellow
Outer	76.65mm {3.018in}	20.1mm {0.791in}	White

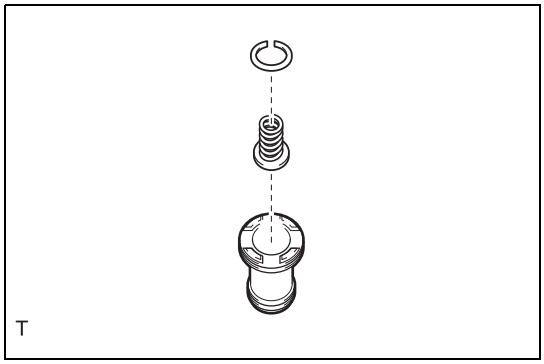

63. Installation of B-3 accumulator piston

(1) Use a flat tip screwdriver to install the spring SUB-ASSY to the B-3 accumulator piston with a snap ring.

B-3 accumulator spring SUB-ASSY

Free length	Coil outer diameter	Color
25.77mm {1.015in}	16.3mm {0.642in}	Violet

CAUTION:
Be careful not to damage the B-3 accumulator piston.
NOTE:
Wrap the tip of a flat tip screwdriver with tape before using it.

AT

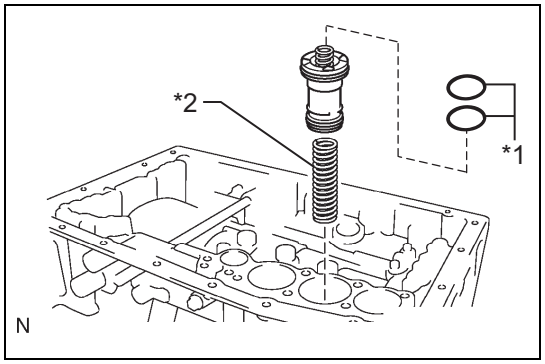

(2) Apply ATF to 2 new O-rings and install them to the B-3 accumulator piston.

Captions in illustration

*1	O-ring
*2	Spring

(3) Install the spring and B-3 accumulator piston to the hole.

B-3 accumulator spring

Free length	Outer diameter	Color
70.5mm {2.776in}	19.7mm {0.776in}	Violet

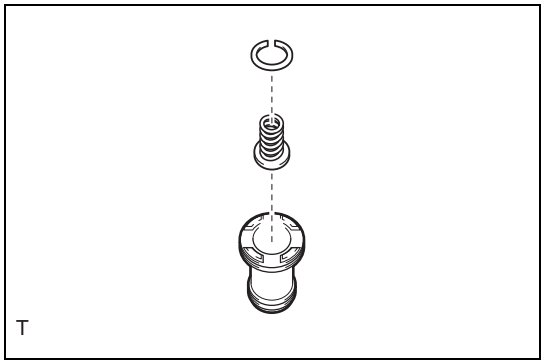

64. Installation of C-2 accumulator piston

(1) Use a flat tip screwdriver to install the spring SUB-ASSY to the C-2 accumulator piston with a snap ring.

C-2 accumulator spring SUB-ASSY

Free length	Coil outer diameter	Color
15.16mm {0.597in}	11.3mm {0.445in}	Natural

CAUTION:
Be careful not to damage the C-2 accumulator piston.
NOTE:
Wrap the tip of a flat tip screwdriver with tape before using it.

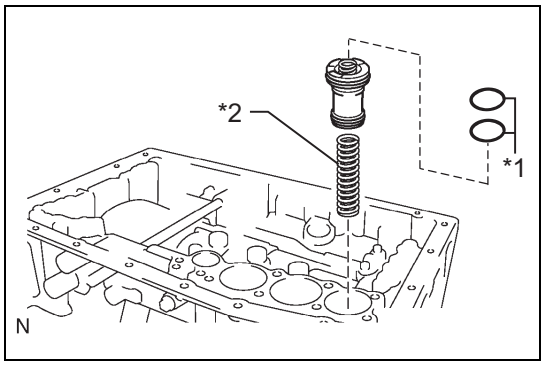

(2) Apply ATF to 2 new O-rings and install them to the C-2 accumulator piston.

Captions in illustration

*1	O-ring
*2	Spring

(3) Install the spring and C-2 accumulator piston to the hole.

C-2 accumulator spring

Free length	Outer diameter	Color
65.07mm {2.562in}	16.2mm {0.638in}	Pink

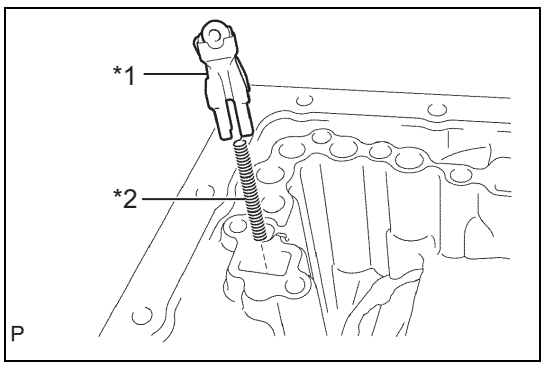

65. Installation of check ball body

(1) Install the check ball body and compression spring to the automatic transmission case SUB-ASSY.

Captions in illustration

*1	Check ball body
*2	Compression spring

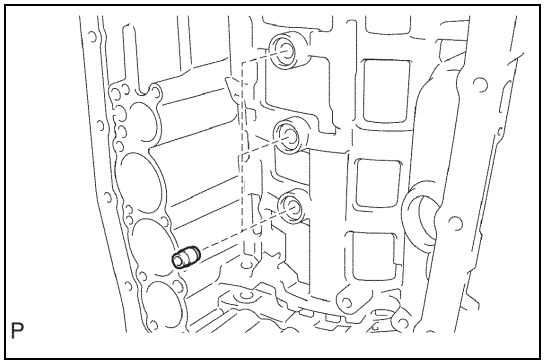

66. Installation of brake drum gasket
    (1) Install 3 new brake drum gaskets to the automatic transmission case SUB-ASSY.

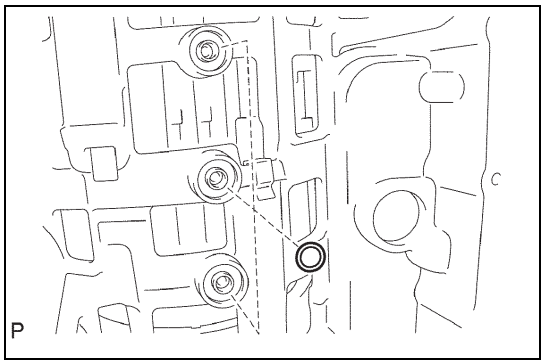

67. Installation of transmission case gasket
    (1) Install 3 new transmission case gaskets on the automatic transmission case SUB-ASSY.

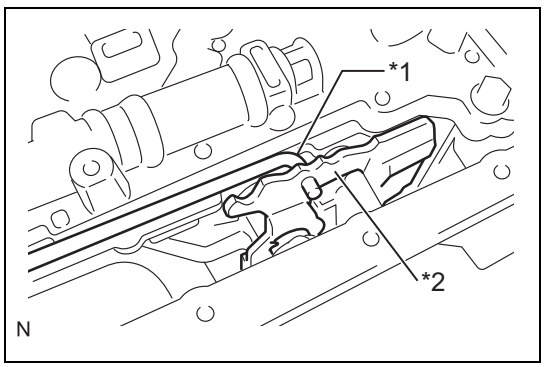

68. Installation of transmission valve body ASSY
    (1) Couple the manual valve connecting rod SUB-ASSY to the manual valve lever SUB-ASSY.

Captions in illustration

*1	Manual valve connecting rod SUB-ASSY
*2	Manual valve lever SUB-ASSY

AT

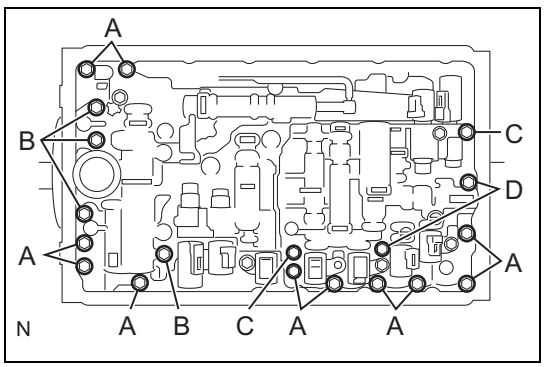

(2) Install the transmission valve body ASSY to the automatic transmission case SUB-ASSY with 19 bolts.
Standard value:T=11N·m {112kgf·cm} {8.1ft·lbf}
NOTE:
The bolt lengths are shown below.
Bolt length:
Bolt A: 25mm {0.984in}
Bolt B: 36mm {1.42in}
Bolt C: 45mm {1.77in}
Bolt D: 50mm {1.97in}

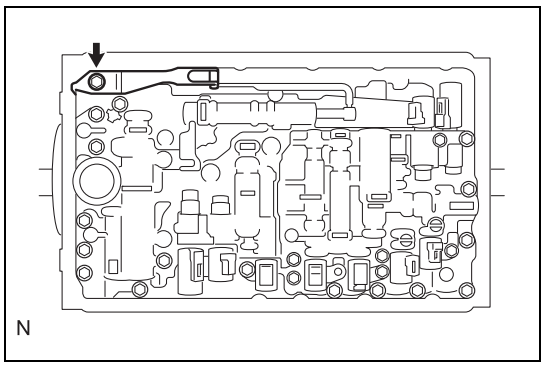

(3) Install the detent spring and detent spring cover to the transmission valve body ASSY with a bolt.
Standard value:T=10N·m {102kgf·cm} {7.4ft·lbf}

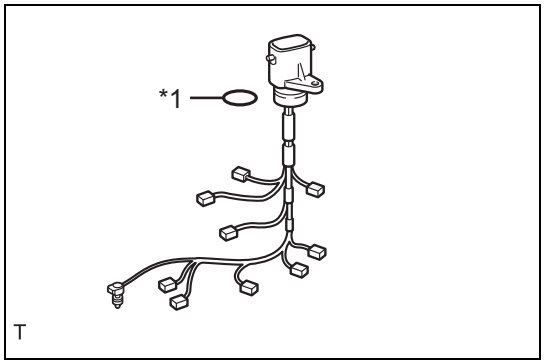

69. Installation of transmission wire
    (1) Apply ATF to a new O-ring and install it to the transmission wire.

Captions in illustration

*1	O-ring

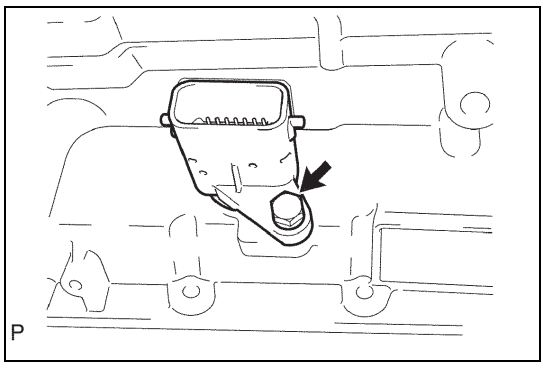

(2) Install the transmission wire with the bolt.
Standard value:T=5.4N·m {55kgf·cm} {4.0ft·lbf}

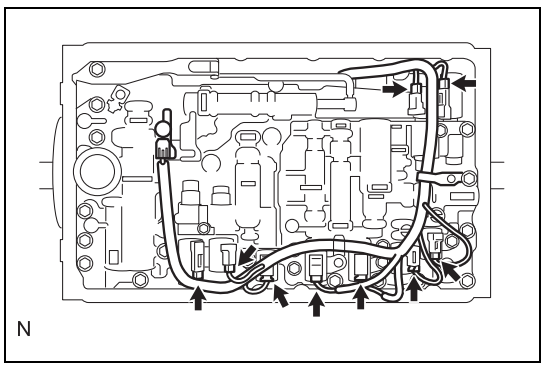

(3) Connect 9 solenoid valve connectors.
(4) Apply ATF to the ATF temperature sensor O-ring.

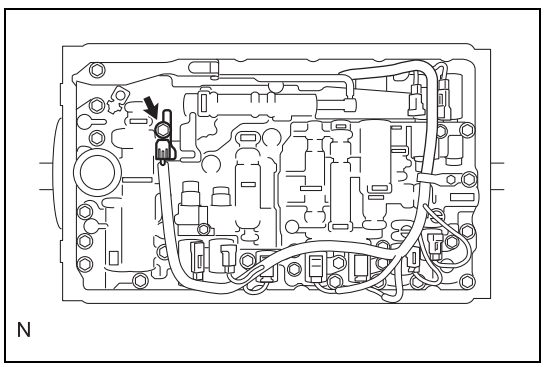

(5) Install the ATF temperature sensor and temperature sensor clamp with a bolt.
Standard value:T=10N·m {102kgf·cm} {7.4ft·lbf}

AT

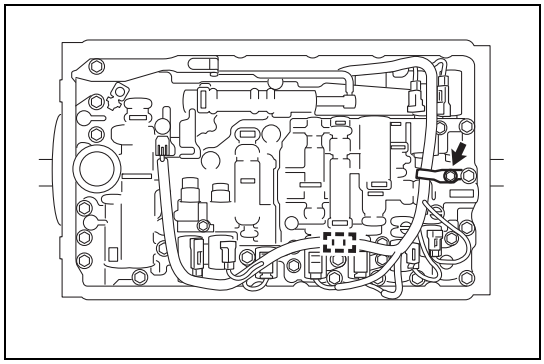

(6) Install the valve body wiring harness clamp with the bolt.
Standard value:T=6.4N·m {65kgf·cm} {4.7ft·lbf}
(7) Secure the wiring harness to the clamp.

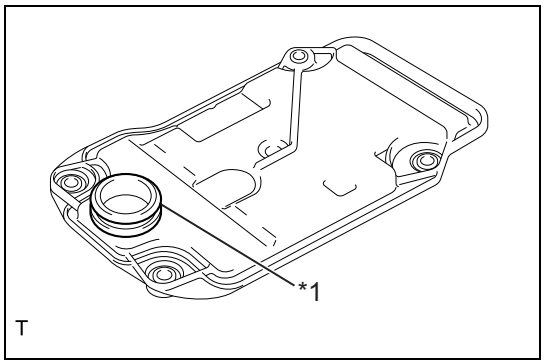

70. Installation of valve body oil strainer ASSY
(1) Apply ATF to a new O-ring and install it to the valve body oil strainer ASSY.

Captions in illustration

*1	O-ring

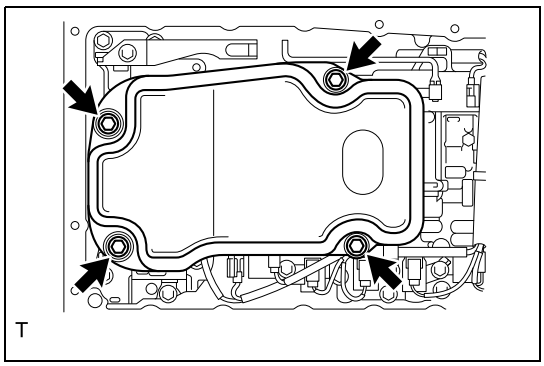

(2) Install the valve body oil strainer ASSY to the transmission valve body ASSY with 4 bolts.
Standard value:T=10N·m {102kgf·cm} {7.4ft·lbf}

AT

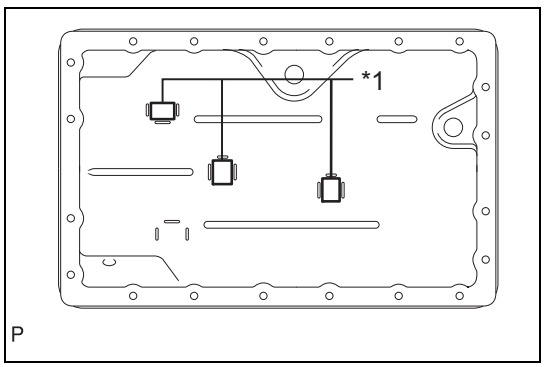

71. Installation of automatic transmission oil pan SUB-ASSY
(1) Install 3 transmission oil cleaner magnets to the automatic transmission oil pan SUB-ASSY.

Captions in illustration

*1	Transmission oil cleaner magnet

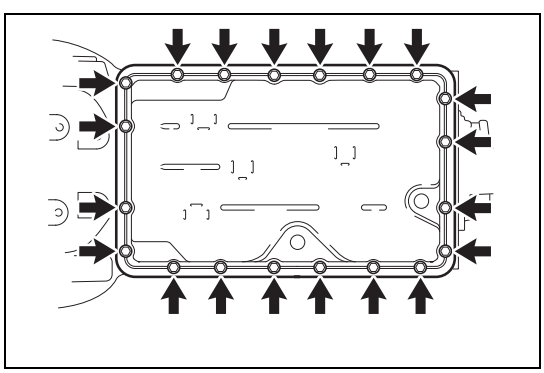

(2) Install a new automatic transmission oil pan gasket and automatic transmission oil pan SUB-ASSY with 20 bolts.
Standard value:T=7.0N·m {71kgf·cm} {5.2ft·lbf}
(3) Install the drain plug and a new gasket.
Standard value:T=20N·m {204kgf·cm} {14.8ft·lbf}
(4) Use a 5-mm socket hexagon wrench to install the overflow plug and a new gasket.
Standard value:T=20N·m {204kgf·cm} {14.8ft·lbf}

72. Installation of output shaft thrust bearing
    (1) Install the output shaft thrust bearing race, output shaft thrust bearing, and rear output shaft thrust bearing case to the output shaft of the rear planetary gear ASSY.

Bearing and race diameter

Item	Inner	Outer
Output shaft thrust bearing race	37.0mm {1.457in}	51.2mm {2.016in}
Output shaft thrust bearing	36.1mm {1.421in}	52.5mm {2.067in}
Rear output shaft thrust bearing race	36.1mm {1.421in}	51.0mm {2.007in}

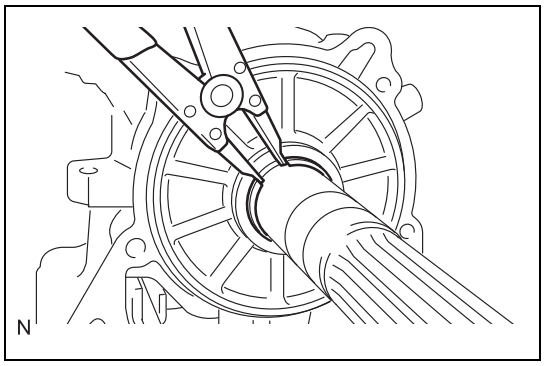

(2) Use a snap ring expander to install the snap ring.

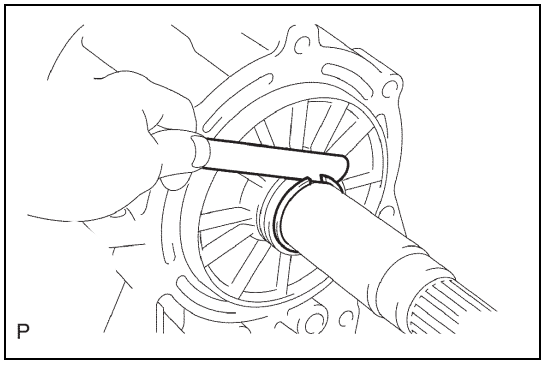

(3) Use a feeler gauge to measure the clearance between the snap ring and rear output shaft thrust bearing race.
Normal clearance: 0.02 to 0.12mm {0.000787 to 0.00472in}
If the clearance is out of the normal range, select another rear output shaft thrust bearing race with the clearance within the normal range.
NOTE:
There are 12 different thicknesses of rear output shaft thrust bearing races.

Race thickness

Part number	Mark	Thickness
35789-35060	▮	3.80mm {0.150in}
35789-50070	▮ ▮	3.85mm {0.152in}
35789-35070	▮ ▮ ▮	3.90mm {0.154in}
35789-50080	▮ ▮ ▮ ▮	3.95mm {0.156in}
35789-35080	▮▮ ▮ ▮▮	4.00mm {0.157in}

AT

Part number	Mark	Thickness
35789-50090	■I	4.05mm {0.159in}
35789-35090	■II	4.10mm {0.161in}
35789-50100	■III	4.15mm {0.163in}
35789-35100	■IIII	4.20mm {0.165in}
35789-50110	■■	4.25mm {0.167in}
35789-50120	■■I	4.30mm {0.169in}
35789-50130	■■II	4.35mm {0.171in}

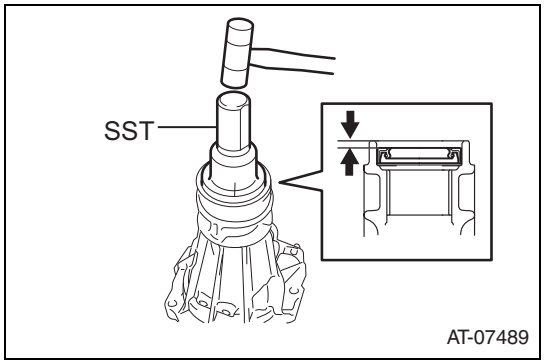

73. Installation of automatic transmission extension housing oil seal
    (1) Tap the automatic transmission extension housing oil seal lightly to insert it into the extension housing SUB-ASSY using the SST and a hammer.
        SST 09325-40010
        Insertion depth: 5.4 to 5.8mm {0.213 to 0.228in}
    (2) Apply auto fluid WS to the lip of the automatic transmission extension housing oil seal.

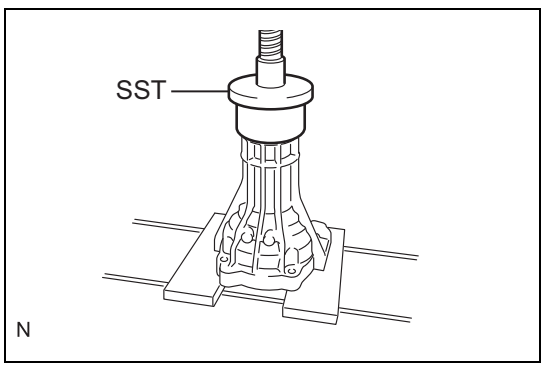

74. Installation of extension housing dust deflector
    (1) Use the SST and a press to install a new extension housing dust deflector to the extension housing SUB-ASSY.
        SST 398177700

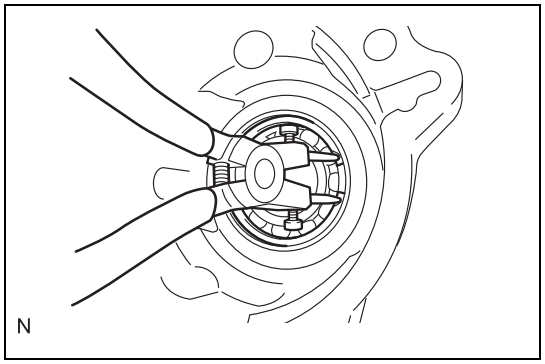

75. Installation of transmission case adapter radial ball bearing
    (1) Install the transmission case adapter radial ball bearing to the extension housing SUB-ASSY.
    (2) Use snap ring pliers to install the snap ring to the extension housing SUB-ASSY.

76. Installation of extension housing SUB-ASSY
    (1) Clean the threads of the 6 bolts and the contact surfaces of the case and housing with appropriate detergent to remove grease.

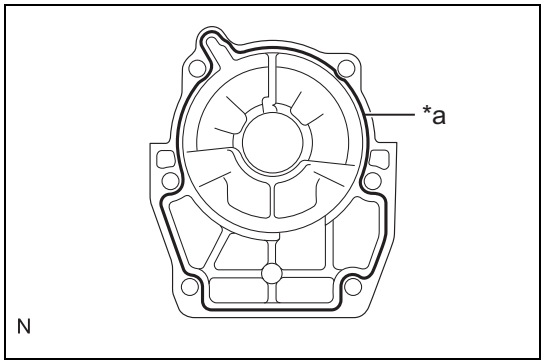

    (2) Apply seal gasket to the extension housing SUB-ASSY as shown in the figure.

Captions in illustration

*a	Seal gasket (Seal diameter: 1.2 mm {0.0472 in})

Seal gasket: Three Bond 1281 or the equivalent

CAUTION:

Assemble the extension housing SUB-ASSY within 10 minutes after applying seal gasket.

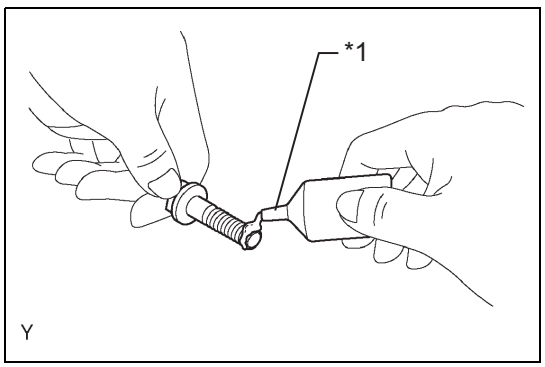

    (3) Apply Adhesive to 2 or 3 threads at the tip of the 6 bolts.

Captions in illustration

*1	Adhesive

Adhesive: Three Bond 1344 or the equivalent

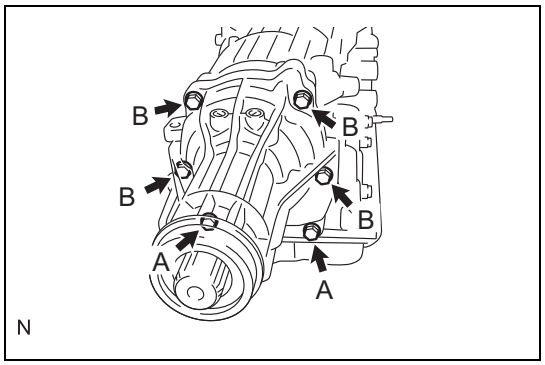

    (4) Install the extension housing SUB-ASSY to the automatic transmission case SUB-ASSY with 6 bolts.
    Standard value:T=34N·m {345kgf·cm} {25.1ft·lbf}
    NOTE:
    The bolt lengths are shown below.
    Bolt length
    Bolt A: 40mm {1.575in}
    Bolt B: 45mm {1.772in}

77. Installation of automatic transmission housing
    (1) Clean the bolts and the bolt holes with appropriate detergent to remove grease.

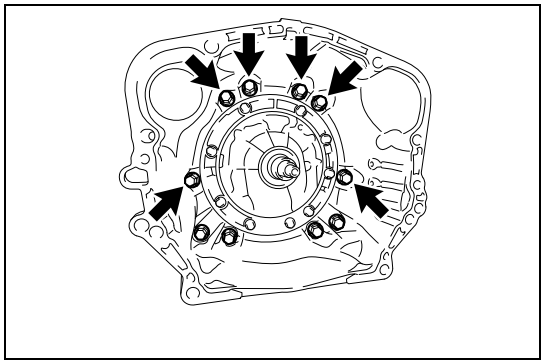

(2) Install the automatic transmission housing to the automatic transmission case SUB-ASSY with 6 bolts.
Standard value:T=34N·m {345kgf·cm} {25.1ft·lbf}

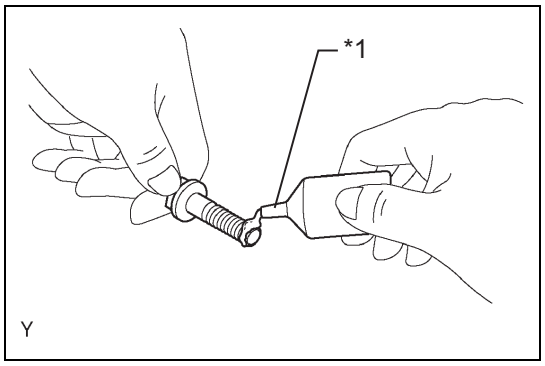

(3) Apply Adhesive to 2 or 3 threads at the tip of the 4 bolts.

Captions in illustration

*1	Adhesive

Adhesive: Three Bond 1344 or the equivalent

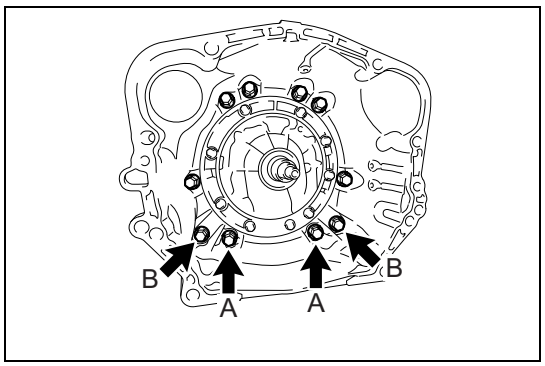

(4) Install the automatic transmission housing to the automatic transmission case SUB-ASSY with 4 bolts.
Standard value:Bolt A (M10 bolt)
T=34N·m {345kgf·cm} {25.1ft·lbf}
Bolt B (M12 bolt)
T=57N·m {579kgf·cm} {42.0ft·lbf}

78. Installation of automatic transmission case plug

(1) Apply ATF to a new O-ring and install it to the automatic transmission case plug.

(2) Use a TORX socket wrench T55 to install the automatic transmission case plug to the automatic transmission case SUB-ASSY.
Standard value:T=39N·m {400kgf·cm} {28.8ft·lbf}

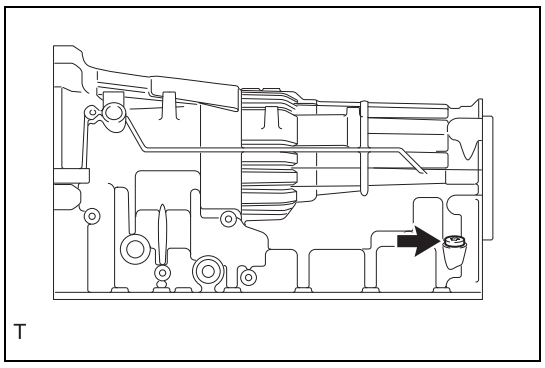

AT

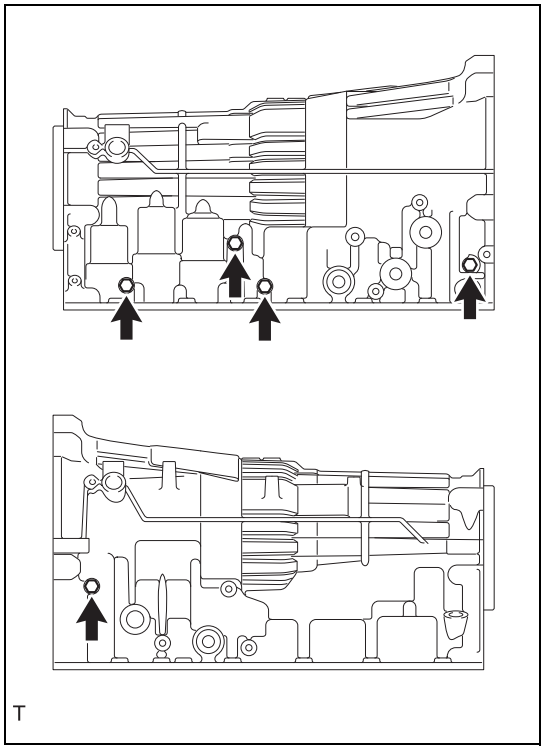
T

(3) Apply ATF to 5 new O-rings and install them to the 5 automatic transmission case plugs.
(4) Install the 5 automatic transmission case plugs to the automatic transmission case SUB-ASSY.
Standard value:T=7.4N·m {75kgf·cm} {5.5ft·lbf}

79. Installation of automatic transmission breather tube
(1) Clean and degrease the transmission case SUB-ASSY mounting area of the breather tube with appropriate detergent.
(2) Degrease the breather tube insert hole of the automatic transmission case SUB-ASSY.
CAUTION:
Keep foreign matter from entering automatic transmission case SUB-ASSY.

AT

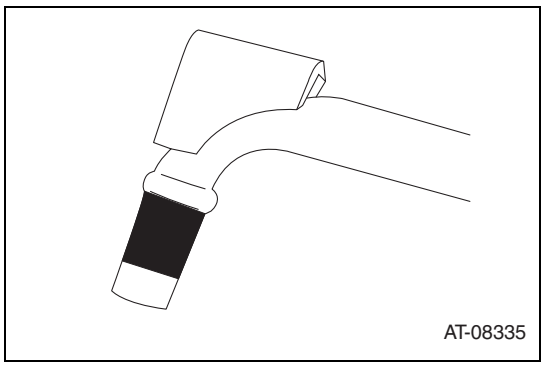

(3) Apply Adhesive to the entire perimeter of the automatic transmission breather tube that fits to the automatic transmission case SUB-ASSY.
Adhesive: Three Bond 1281 or the equivalent
CAUTION:
Keep the Adhesive applied area from coming in contact with foreign matter.

Captions in illustration

■	Adhesive

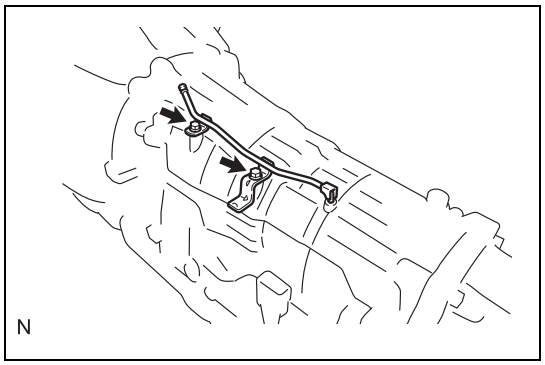
N

(4) Install the automatic transmission breather tube to the automatic transmission case SUB-ASSY with 2 bolts.
CAUTION:
Do not use excessive force to insert it into the case SUB-ASSY.
Standard value:T=5.4N·m {55kgf·cm} {4.0ft·lbf}



80. Installation of transmission revolution sensor
    (1) Apply ATF to 2 new O-rings and install them to the 2 transmission revolution sensors.
    (2) Install the 2 transmission revolution sensors to the automatic transmission case SUB-ASSY with 2 bolts.
    Standard value:T=5.4N·m {55kgf·cm} {4.0ft·lbf}

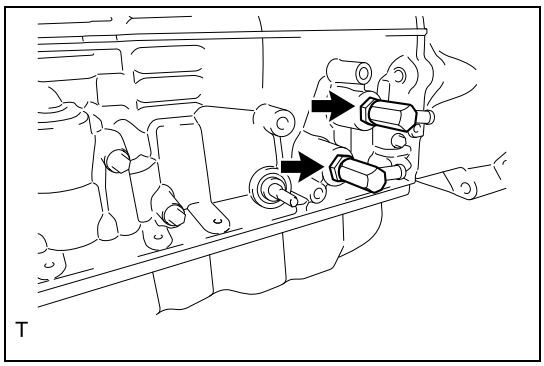

81. Installation of transmission oil cooler
    (1) Install the 2 oil cooler tube unions to the automatic transmission case SUB-ASSY.
    Standard value:T=29.4N·m {300kgf·cm} {21.7ft·lbf}

AT

82. Installation of neutral start switch ASSY
    (1) Clean the bolt and the bolt hole.

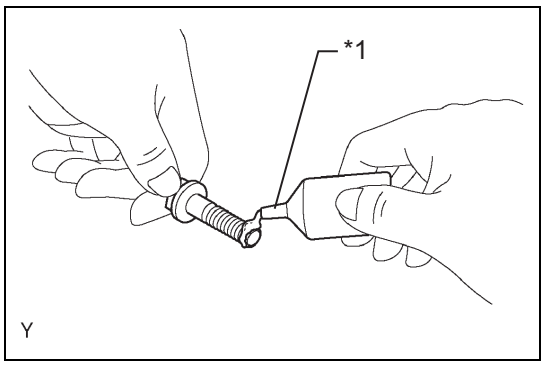

    (2) Apply adhesive to 2 or 3 threads at the tip of the bolt.

Captions in illustration

*1	Adhesive

Adhesive: Three Bond 1344 or the equivalent

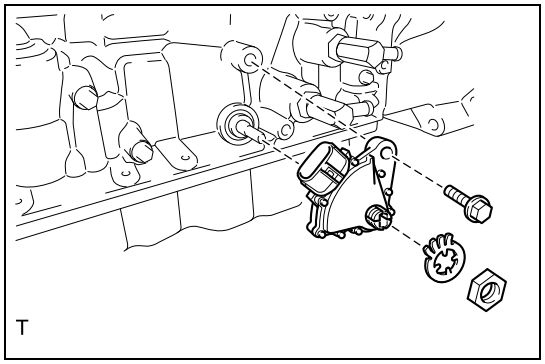

(3) Temporarily install the neutral start switch ASSY to the automatic transmission case SUB-ASSY with the bolt.

(4) Install a new lock washer and a nut.
Standard value:T=6.9N·m {70kgf·cm} {5.1ft·lbf}

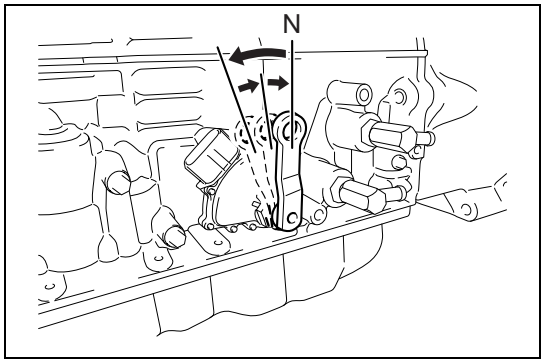

(5) Turn the transmission control shaft lever RH counterclockwise until it stops, then turn it clockwise by 2 notches to set to N position.

AT

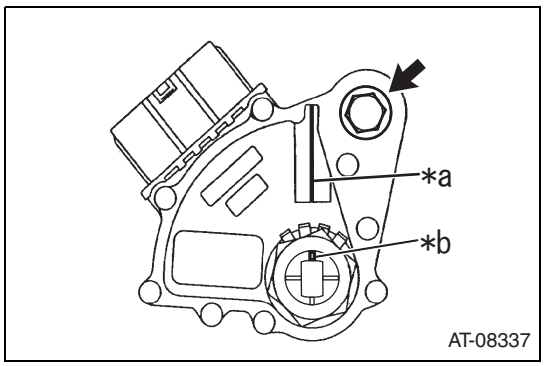

(6) Align the neutral basic line with the groove as shown in the figure and tighten the bolt.

Captions in illustration

*a	Neutral basic line
*b	Groove

Standard value:T=13N·m {130kgf·cm} {9.6ft·lbf}

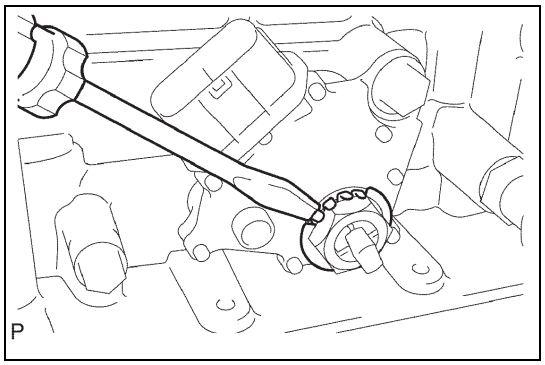

(7) Use a flat tip screwdriver to bend the tab of the lock washer.

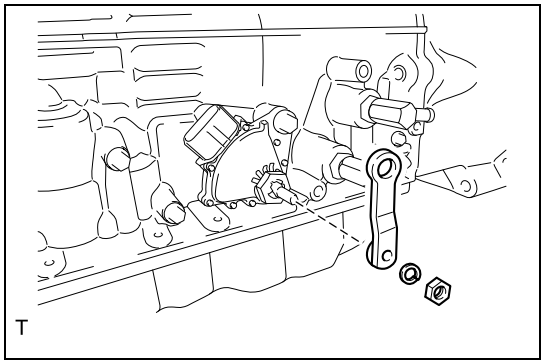

83. Installation of transmission control shaft lever RH
    (1) Install the transmission control shaft lever RH to the neutral start switch ASSY with the spring washer and the nut.
    Standard value:T=16N·m {160kgf·cm} {11.8ft·lbf}

84. Installation of refill plug.
    (1) Apply ATF to a new O-ring and install it to the refill plug.
    (2) Install the refill plug.
    Standard value:T=39N·m {400kgf·cm} {28.8ft·lbf}

Torque converter & drive plate

Inspection

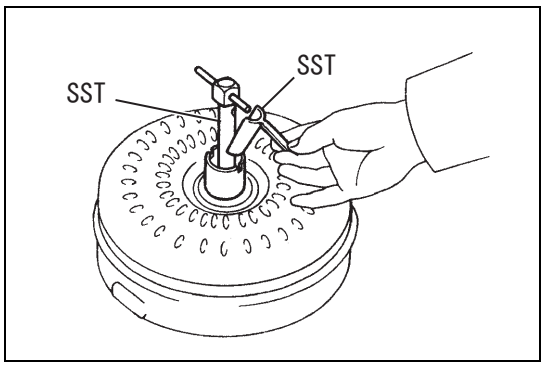

1. Check of torque converter ASSY
   (1) Check of torque converter one-way clutch
      (a) Insert the SST into the stator shaft fitting area.
         SST 09351-32010
      (b) Insert the SST from the torque converter sleeve and engage it to the stator thrust washer cutout.
         SST 09351-32020

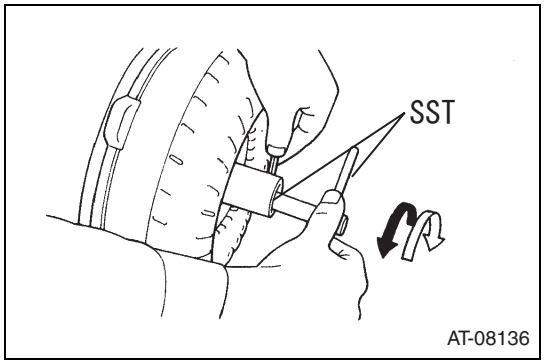

      (c) Raise the torque converter and turn the SST (tool).

Captions in illustration

➡	Lock
⇨	Turn

Criteria: Turns lightly when turned clockwise and locked when turned counterclockwise.

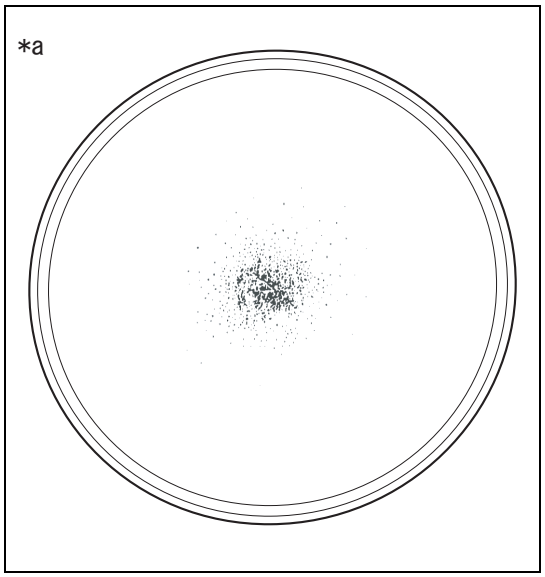

   (2) Quality check of torque converter ASSY
      (a) If the check result of the torque converter fits the criteria, replace the torque converter.

Captions in illustration

*a	Limit sample of fines in auto fluid

Criteria: Metallic sound is heard at the torque converter during stall test or in neutral.
1-way clutch is free in both directions or locked.
Auto fluid contains fines in amounts greater than the limit sample (see the limit sample)

NOTE:
- The limit sample of fines in auto fluid is approx. 0.025 L {0.026 US qt, 0.022 Imp qt} of auto fluid drawn from the removed torque converter to a petri dish.
- For the limit sample of fines in auto fluid, refer to "Notes packaged with rebuilt A/T".

   (3) Replacement of auto fluid in torque converter
      (a) If auto fluid has an unusual odor and is discolored, thoroughly stir the auto fluid in the torque converter and draw the auto fluid with the installing surface facing upward.

AT

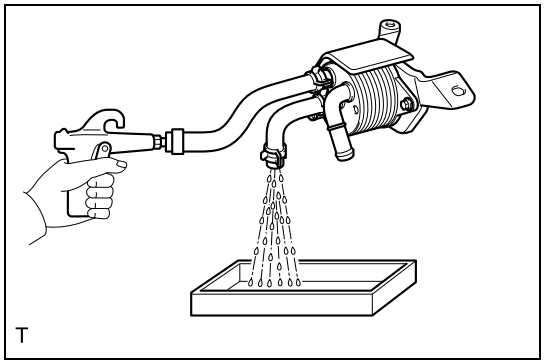

(4) Check of oil cooler and oil pipeline cleaning
(a)When checking the torque converter and filling auto fluid, clean the oil cooler and the pipeline.
NOTE:
Clean by blowing 196 kPa {2.0 kgf/cm^2, 28.4 psi} of compressed air from the inlet hose.
(b)If the auto fluid or the coolant is cloudy, check the oil cooler.

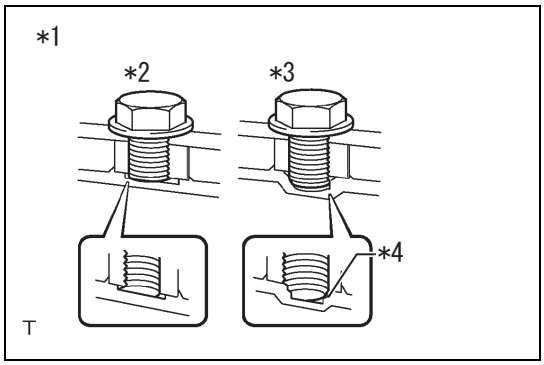

(5) Prevention of torque converter deformation and oil pump gear damage
(a)If interference marks are found at the end of the torque converter installation bolt and the bottom of the torque converter installation hole, replace the bolt and the torque converter.

Captions in illustration

*1	Example of damage in T/C set block
*2	Normal
*3	Defective
*4	Scuffing (Hole is deep.)

(b)The installation bolt lengths shall be all the same. (10.3 to 10.8 mm {0.406 to 0.425 in})

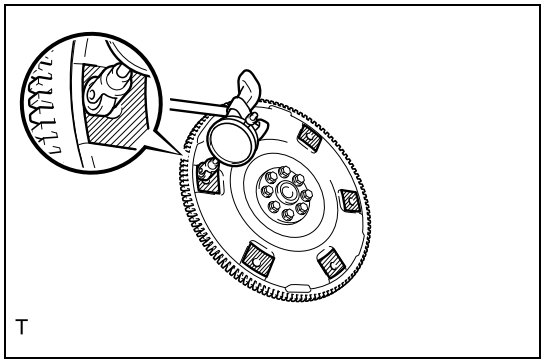

2. Drive plate check
(1) Drive plate check
(a)Using a dial gauge, check the drive plate runout.

Captions in illustration

▨	Measuring point

Standard value: 0.30mm {0.0118in}
NOTE:
If it is not within the standard value, replace the drive plate and the ring gear. (Refer to EM - 53)

AT

Transmission control computer ASSY

Exploded view

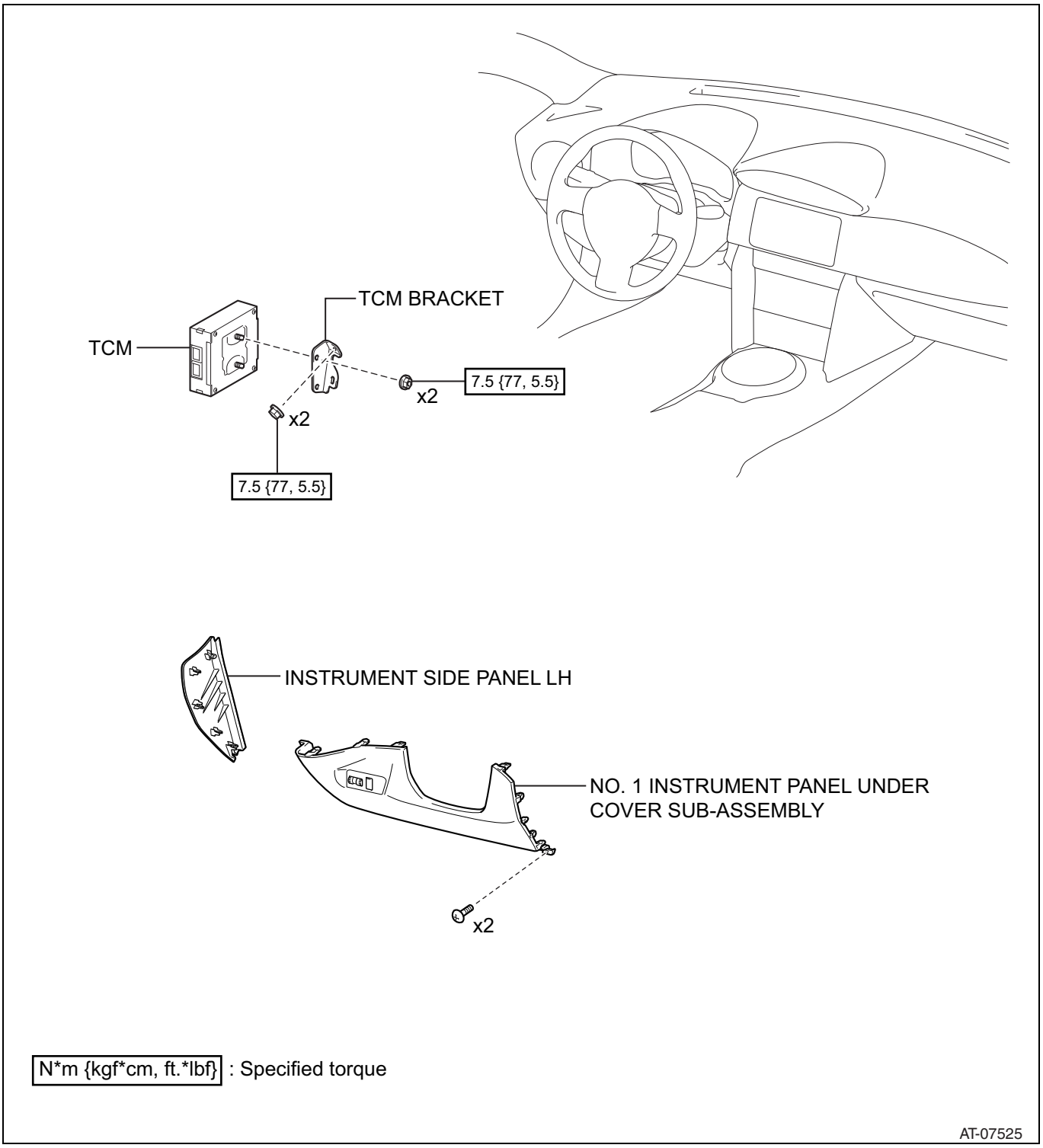

AT

Removal

1. Disconnection of the battery ground terminal (Refer to BH - 31)
2. Removal of the instrument side panel LH (Refer to IT - 24)
3. Removal of the instrument panel under cover SUB-ASSY No. 1 (Refer to ME - 68)

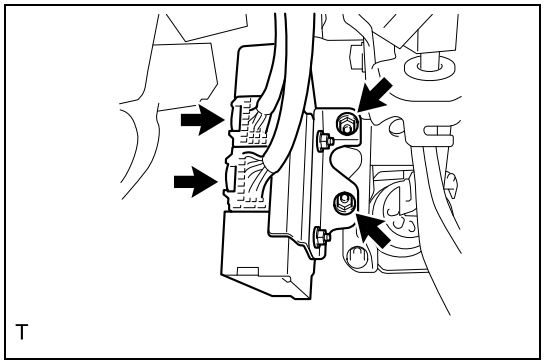

4. Removal of transmission control computer ASSY
   (1) Disconnect the 2 connectors from the transmission control computer ASSY.
   (2) Remove 2 nuts to remove the transmission control computer ASSY.

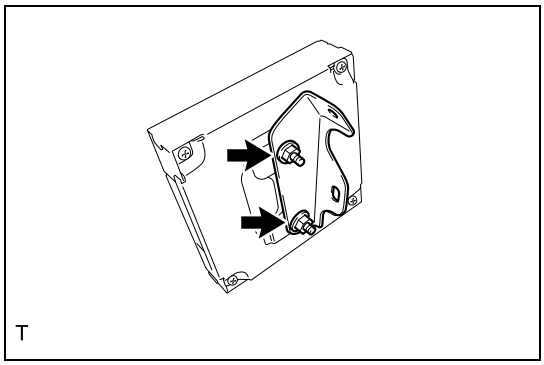

   (3) Remove 2 nuts to remove the transmission control computer ASSY from the transmission control computer bracket.

Installation

1. Installation of transmission control computer ASSY
   (1) Install the transmission control computer ASSY to the transmission control computer bracket with 2 nuts.
   Standard value:T=7.5N·m {77kgf·cm} {5.5ft·lbf}
   (2) Install the transmission control computer ASSY with 2 nuts.
   Standard value:T=7.5N·m {77kgf·cm} {5.5ft·lbf}
   (3) Connect the 2 connectors to the transmission control computer ASSY.
2. Installation of the instrument panel under cover SUB-ASSY No.1 (Refer to ME - 69)
3. Installation of the instrument side panel RH (Refer to IT - 29)
4. Connection of the battery ground terminal
5. Initialization when removing/installing battery terminals
   (Refer to IN - 6)

AT

Clutch

Clutch system
- Function inspection CL-2
- Symptom table CL-2

Clutch fluid
- Replacement CL-3
- Air bleeding CL-3
- On-vehicle inspection CL-4

Clutch pedal
- Exploded view CL-5
- Removal CL-7
- Installation CL-9
- Adjustment CL-12

Clutch master cylinder ASSY
- Exploded view CL-15
- Removal CL-16
- Disassembly CL-17
- Assembly CL-17
- Installation CL-18

Clutch release cylinder ASSY
- Exploded view CL-20
- Removal CL-20
- Installation CL-20

Clutch
- Exploded view CL-22
- Removal CL-22
- Inspection CL-24
- Installation CL-26

Clutch pedal switch
- Exploded view CL-28
- Removal CL-28
- Installation CL-29
- On-vehicle inspection CL-30
- Unit inspection CL-30

Clutch system

Function inspection

1. Check of clutch start switch ASSY function
   (1) Make sure that engine does not start with clutch pedal not depressed.
   (2) Make sure that engine starts with the clutch pedal fully depressed.

Symptom table

Clutch system

Symptoms	Inspection items	Reference pages
There is a rattly feeling when engaging clutch.	Engine mounting (looseness)	-
	Clutch disc ASSY (deflection)	CL - 24
	Clutch disc ASSY (oil adhesion)	CL - 22
	Clutch disc ASSY (wear)	CL - 24
	Clutch disc ASSY (damage)	CL - 24
Clutch pedal is not responsive when depressed.	Clutch pipeline (air entry)	CL - 4
	Clutch master cylinder piston (damage)	CL - 16
	Clutch release cylinder piston (damage)	CL - 20
Noise is emitted from clutch.	Clutch release bearing ASSY (wear, dirt, or damage)	CL - 25
	Clutch disc ASSY (damage)	CL - 24
	Clutch release fork SUB-ASSY (contacting part grease insufficient)	CL - 23
Clutch slips.	Clutch pedal (play)	CL - 12
	Clutch disc ASSY (oil adhesion)	CL - 22
	Clutch disc ASSY (wear)	CL - 24
	Clutch cover diaphragm spring (damage)	CL - 25
	Flywheel (distortion)	CL - 25
Clutch does not engage.	Clutch pedal (play)	CL - 12
	Clutch pipeline (air entry)	CL - 4
	Clutch master cylinder piston (damage)	CL - 16
	Clutch release cylinder cup (damage)	CL - 20
	Clutch disc ASSY (position not aligned)	CL - 26
	Clutch disc ASSY (deflection)	CL - 24
	Clutch disc ASSY (lining damaged)	CL - 24
	Clutch disc ASSY (dirt or seizing)	CL - 22
	Clutch disc ASSY (oil adhesion)	CL - 22
	Clutch disc ASSY (clutch spline grease insufficient)	CL - 26
	Clutch cover diaphragm spring (damage)	CL - 25

Clutch fluid

Replacement

CAUTION:

- Be careful not to spill the brake fluid. Brake fluid spilled on the vehicle body will damage the paint surface; wash it off with water and wipe clean quickly if spilled.
- Be sure to use FMVSS No.116 DOT3.
- Cover the bleeder plug with cloth to prevent clutch fluid from being splashed on surrounding parts when loosening the plug.
- Avoid mixing clutch fluid of different brands to prevent fluid performance from degrading.
- Be careful not to allow dirt or dust to enter the reservoir tank.

1. Clutch fluid replenishment
   (1) Remove the master cylinder reservoir cap.

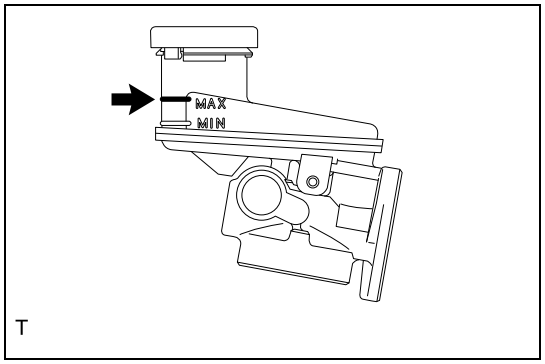

T

   (2) Fill the clutch master cylinder reservoir SUB-ASSY with clutch fluid up to the MAX level.

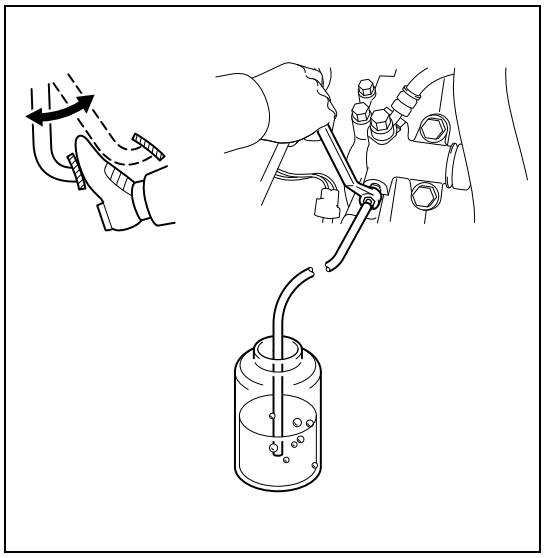

2. Clutch fluid replacement
   (1) Connect the vinyl tube to the release cylinder bleeder plug.
   (2) Depress the clutch pedal several times, then loosen the release cylinder bleeder plug with the clutch pedal depressed.
   (3) Depress the clutch pedal and drain the fluid from the release cylinder bleeder plug.
   CAUTION:
   During clutch fluid replacement work, keep the clutch fluid amount in the reservoir at the MIN line or above.
   (4) After the draining, tighten the release cylinder bleeder plug with the clutch pedal depressed.
   Standard value:T=7.8N·m {80kgf·cm} {5.8ft·lbf}

3. Clutch fluid leakage check
4. Clutch fluid amount check (refer to CL - 4)

Air bleeding

1. Handling/working precautions
   CAUTION:
   - Be careful not to spill the brake fluid. Brake fluid spilled on the vehicle body will damage the paint surface; wash it off with water and wipe clean quickly if spilled.
   - Be sure to use FMVSS No.116 DOT3.
   - Cover the bleeder plug with cloth to prevent clutch fluid from being splashed on surrounding parts when loosening the plug.
   - Avoid mixing clutch fluid of different brands to prevent fluid performance from degrading.
   - Be careful not to allow dirt or dust to enter the reservoir tank.
2. Filling of clutch fluid (refer to CL - 3)

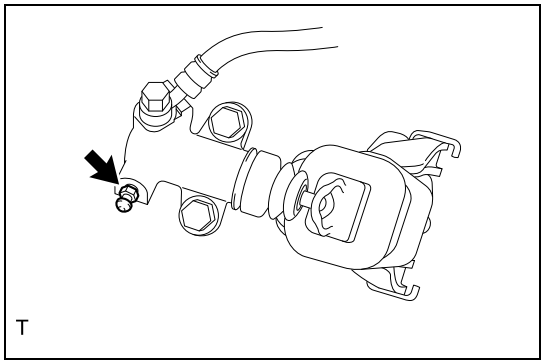
T

3. Air bleeding of clutch pipeline
   (1) Connect the vinyl tube to the release cylinder bleeder plug.
   (2) Depress the clutch pedal several times, then loosen the release cylinder bleeder plug with the clutch pedal depressed. (*a)
   (3) When the clutch fluid does not flow out anymore, tighten the release cylinder bleeder plug and release the clutch pedal. (*b)
   (4) Repeat the steps (*a) to (*b) until the air in the clutch fluid disappears.
   Standard value:T=7.8N·m {80kgf·cm} {5.8ft·lbf}
   (5) Depress the clutch pedal 10 times or more.
   CAUTION:
   Be sure to perform the operation before starting the engine.
   (6) Check that there is no air entry in the clutch fluid.

4. Clutch fluid leakage check
5. Clutch fluid amount check (refer to CL - 4)

On-vehicle inspection

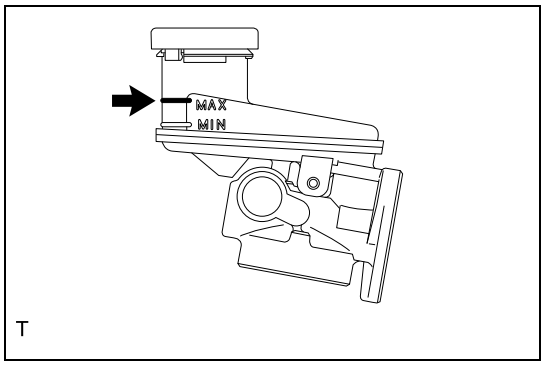

T

1. Clutch fluid amount check
   (1) Check the clutch fluid amount and fill it to the MAX level of the master cylinder reservoir SUB-ASSY as necessary .
   CAUTION:
   When using a tool such as a dropper to adjust the fluid amount, do not use one that has been used for mineral oil, water, or deteriorated clutch fluid. It will cause deterioration of sealing parts and fluid, resulting in fluid leakage and clutch ineffectiveness.

Clutch pedal

Exploded view

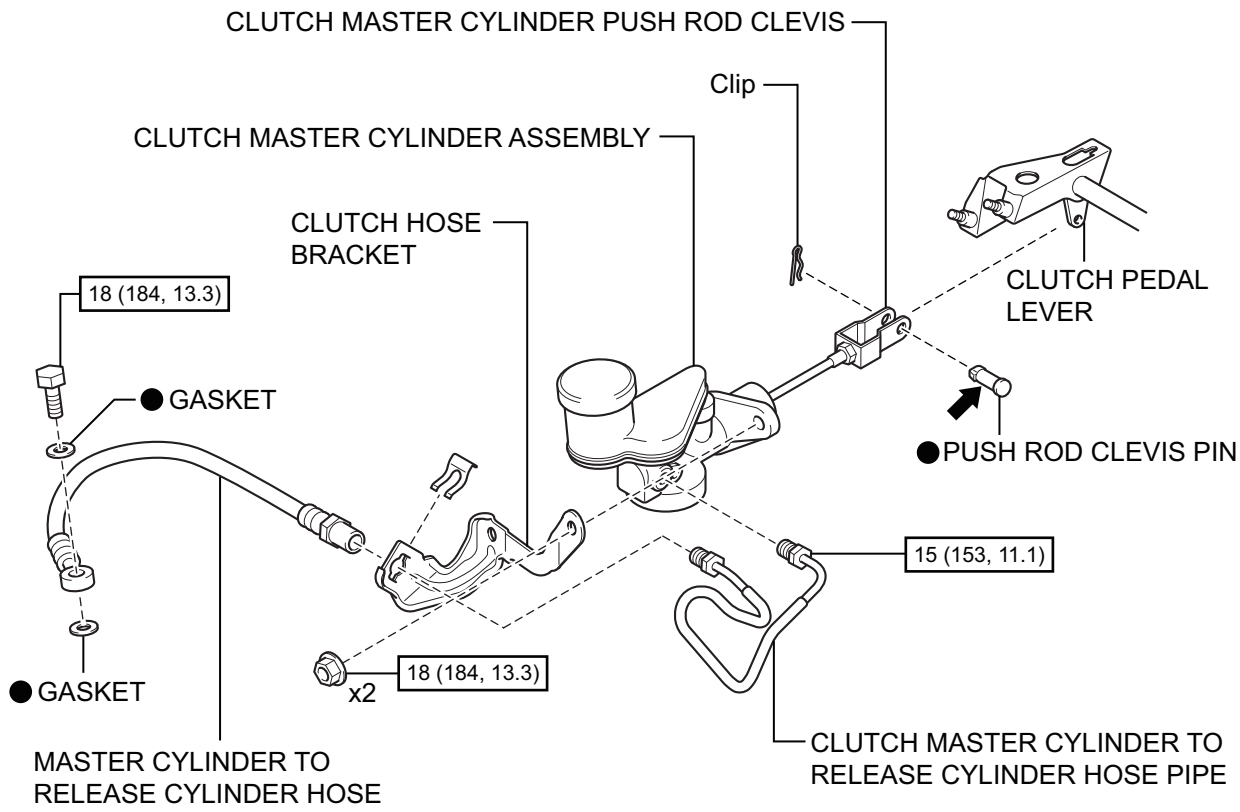

CL

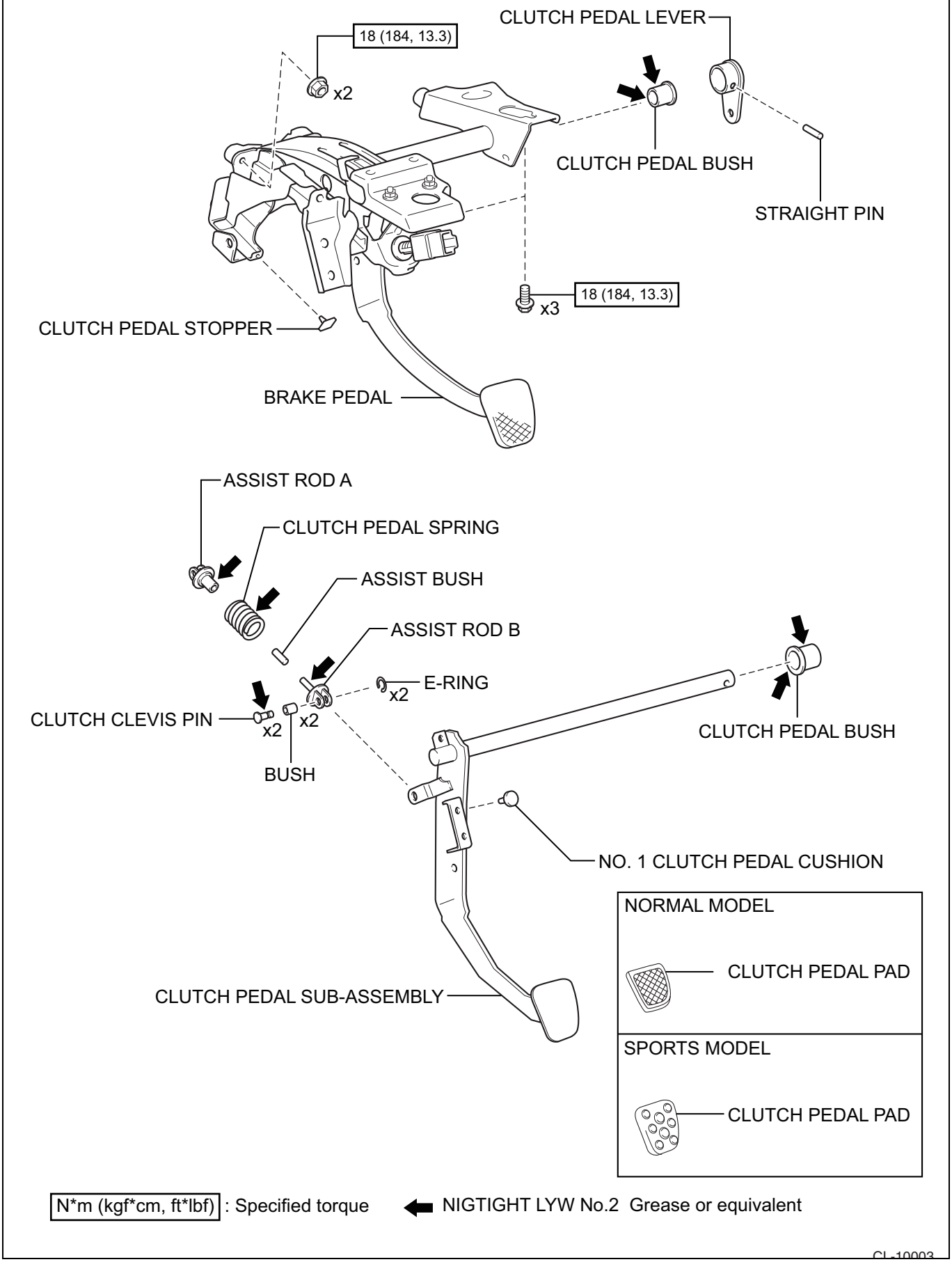

N*m (kgf*cm, ft*lbf) : Specified torque ◀ NIGTIGHT LYW No.2 Grease or equivalent

CL-10003

Removal

1. Removal of instrument side panel LH (refer to IT - 24)
2. Removal of instrument panel under cover SUB-ASSY No. 1 (refer to ME - 68)
3. Removal of power steering computer (refer to PA - 40)

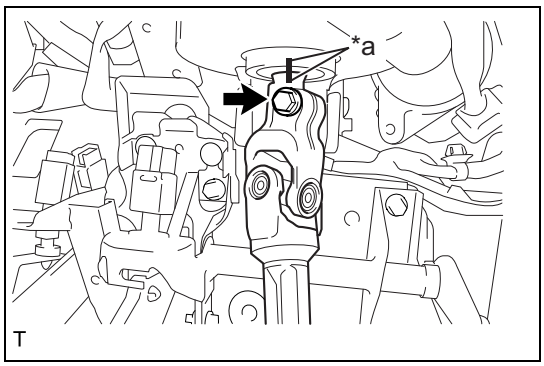

4. Disconnection of steering intermediate shaft ASSY
   (1) Mark an alignment mark on the steering intermediate shaft and the steering column ASSY.

Captions in illustration

*a	Alignment marks

   (2) Remove the bolt to disconnect the steering intermediate shaft ASSY and the steering column ASSY.

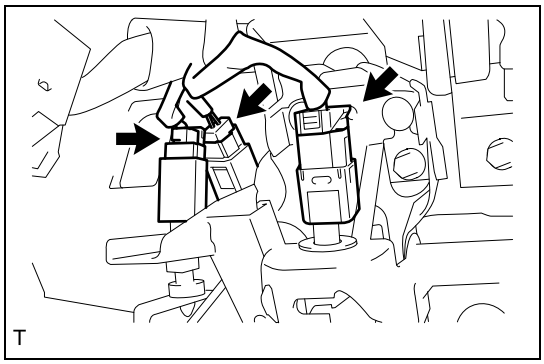

5. Removal of clutch pedal support SUB-ASSY
   (1) Disconnect the 3 connectors.

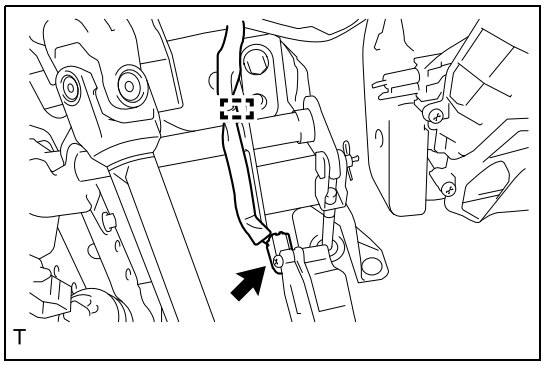

   (2) Remove the connector and wiring harness clamp.

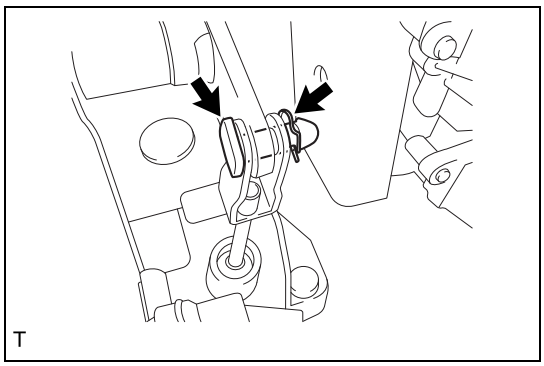

   (3) Remove the clip and push rod clevis pin to remove the clutch master cylinder push rod clevis from the clutch pedal lever SUB-ASSY.

CL

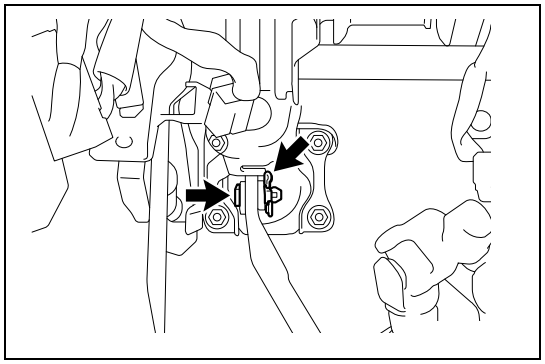

(4) Remove the clip and push rod pin to remove the brake master cylinder push rod clevis from the brake pedal.

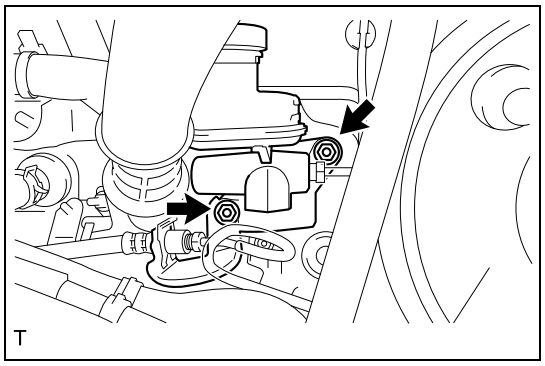

(5) Remove 2 nuts to remove the clutch master cylinder ASSY.

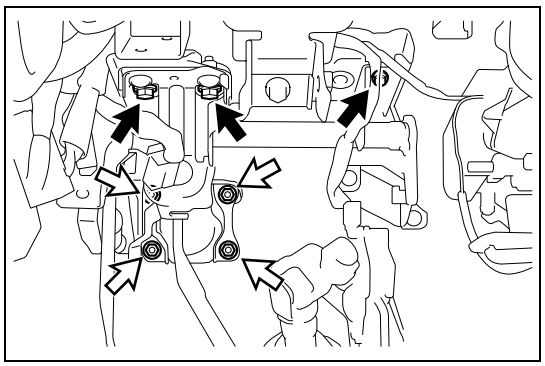

(6) Remove the 3 bolts, 4 nuts, and clutch pedal support SUB-ASSY.

Captions in illustration

➡	Bolt
⇨	Nut

6. Removal of clutch start switch ASSY (refer to CL - 29)

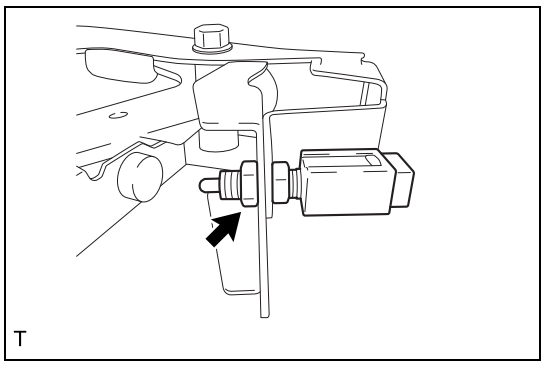

7. Removal of clutch switch ASSY
   (1) Remove the nut and then remove the clutch switch ASSY from the clutch pedal support SUB-ASSY.

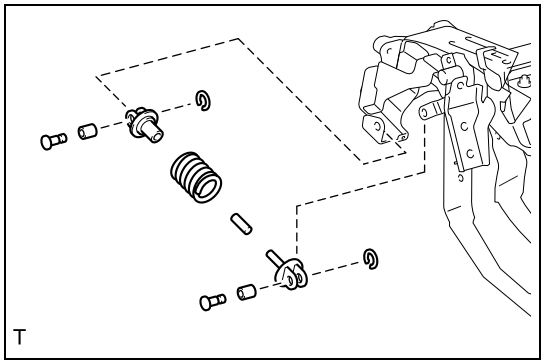

8. Removal of clutch pedal spring
   (1) Remove the 2 E-rings and 2 clutch clevis pins.
   (2) Remove the assist rod A, assist rod B, clutch pedal spring, and assist bushing.
   (3) Remove the 2 bushings from the clutch pedal SUB-ASSY and clutch pedal support SUB-ASSY.

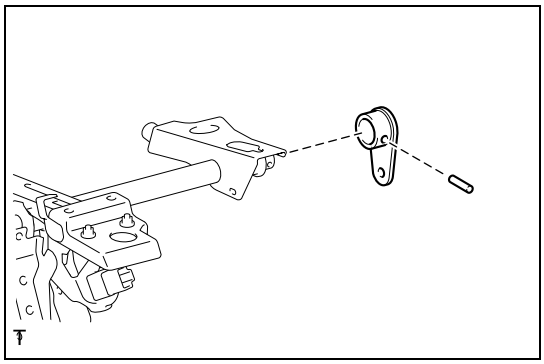

9. Removal of clutch pedal SUB-ASSY
   (1) Use a pin punch and hammer to drive in a pin and remove the clutch pedal lever SUB-ASSY.

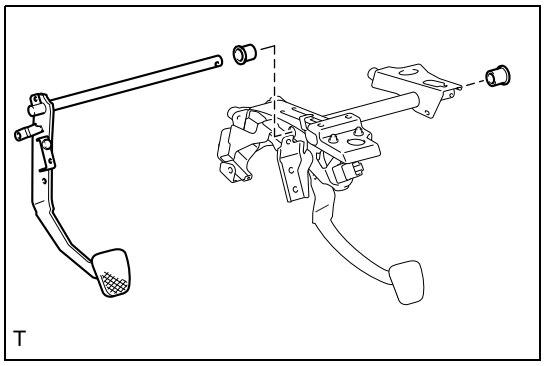

   (2) Remove the clutch pedal SUB-ASSY and 2 clutch pedal bushings from the clutch pedal support SUB-ASSY.

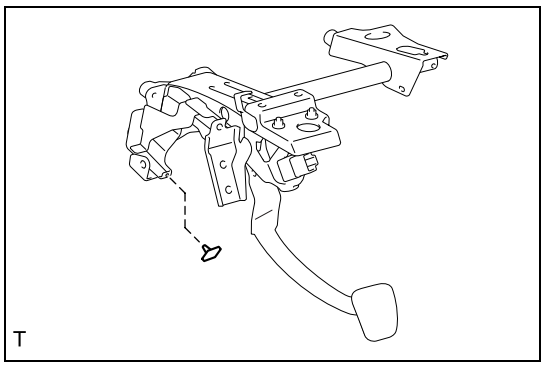

10. Removal of clutch pedal stopper
    (1) Remove the clutch pedal stopper from the clutch pedal SUB-ASSY.

11. Removal of clutch pedal cushion No.1
    (1) Remove the clutch pedal cushion No.1 from the clutch pedal SUB-ASSY.
12. Removal of clutch pedal pad
    (1) Remove the clutch pedal pad from the clutch pedal SUB-ASSY.

Installation

1. Installation of clutch pedal pad
   (1) Install the clutch pedal pad to the clutch pedal SUB-ASSY.
2. Installation of clutch pedal cushion No.1
   (1) Install the clutch pedal cushion No.1 to the clutch pedal SUB-ASSY.

3. Installation of clutch pedal stopper
   (1) Install the clutch pedal stopper to the clutch pedal SUB-ASSY.

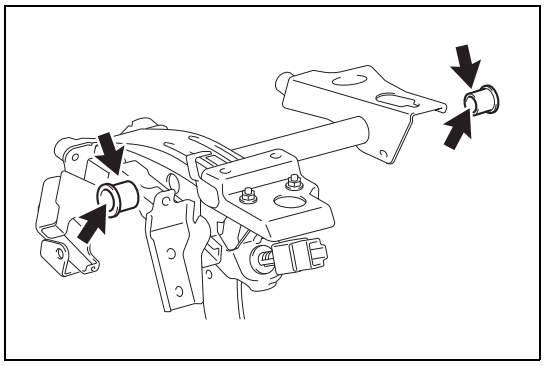

4. Installation of clutch pedal SUB-ASSY
   (1) Apply NIGTIGHT LYW No.2 grease to the inner and outer surfaces of the 2 clutch pedal bushings.

Captions in illustration

➡	NIGTIGHT LYW No.2 grease

   (2) Install the clutch pedal SUB-ASSY and 2 clutch pedal bushings to the clutch pedal support SUB-ASSY.
   (3) Align the holes of clutch pedal lever SUB-ASSY and clutch pedal SUB-ASSY, and drive in a pin using a pin punch and a hammer.

5. Installation of clutch pedal spring
   (1) Install 2 bushings to the clutch pedal SUB-ASSY and clutch pedal support SUB-ASSY.

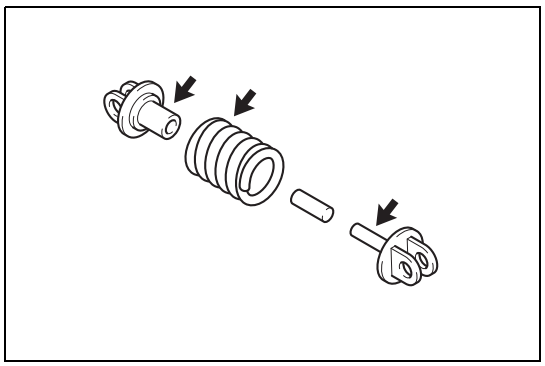

   (2) Apply NIGTIGHT LYW No.2 grease to the assist rod A, assist rod B, and clutch pedal spring outer surface.

Captions in illustration

➡	NIGTIGHT LYW No.2 grease

CL

   (3) Install the assist rod A, assist rod B, clutch pedal spring, and assist bushing to the clutch pedal SUB-ASSY and clutch pedal support SUB-ASSY.

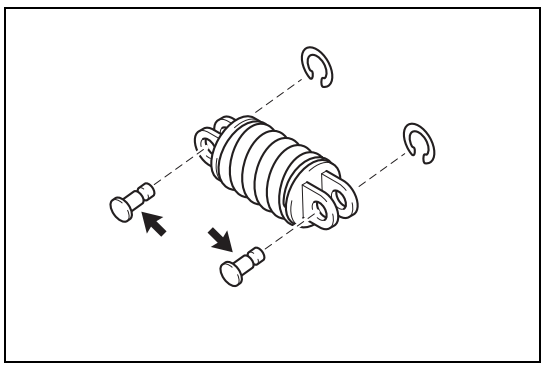

   (4) Apply NIGTIGHT LYW No.2 grease to the outer surfaces of the 2 clutch clevis pins.

Captions in illustration

➡	NIGTIGHT LYW No.2 grease

   (5) Install 2 clutch clevis pins and 2 clips.
   NOTE:
   Insert the clutch clevis pin from the left side of the vehicle.

6. Installation of clutch switch ASSY
   (1) Install the clutch switch ASSY to the clutch pedal support SUB-ASSY with the nut.
   Standard value:T=8.0N·m {82kgf·cm} {5.9ft·lbf}

7. Installation of clutch start switch ASSY (refer to CL - 29)

8. Installation of clutch pedal support SUB-ASSY

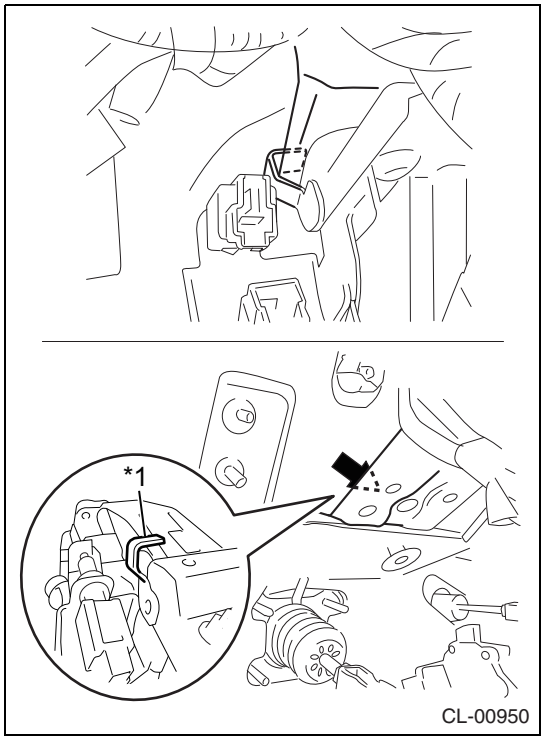

(1) Hang the hook for the clutch pedal support SUB-ASSY on the pedal bracket.

Captions in illustration

*1	Hook

(2) Install the clutch pedal support SUB-ASSY to the vehicle with 4 nuts and 3 bolts.
Standard value:T=18N·m {184kgf·cm} {13.3ft·lbf}

(3) Install to the clutch master cylinder ASSY with 2 nuts.
Standard value:T=18N·m {184kgf·cm} {13.3ft·lbf}

(4) Apply NIGTIGHT LYW No.2 grease to the inner and outer surfaces of a new push rod clevis pin.

(5) Install the clutch master cylinder push rod clevis to the clutch pedal lever SUB-ASSY with the push rod clevis pin and clip.
NOTE:
Insert the push rod clevis pin from the left side of the vehicle.

(6) Apply NIGTIGHT LYW No.2 grease to the inner and outer surfaces of a new push rod pin.

(7) Install the brake master cylinder push rod clevis with the push rod pin and clip.
NOTE:
Insert the push rod from the left side of the vehicle.

(8) Connect the connector and install the wiring harness clamp.

(9) Connect the 3 connectors.

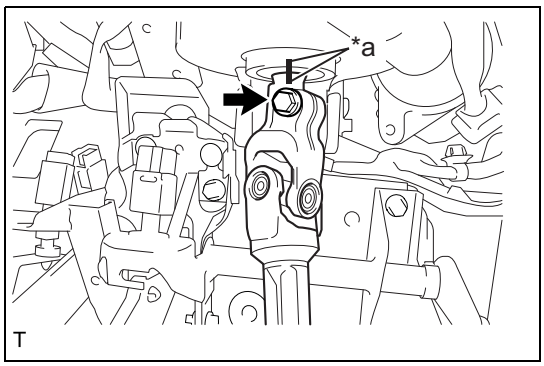

9. Installation of steering intermediate shaft ASSY

(1) Install the steering intermediate shaft ASSY to the steering column ASSY.

Captions in illustration

*a	Alignment marks

CAUTION:
Align the alignment marks of the steering intermediate shaft ASSY and steering column ASSY.

(2) Install the bolt.
Standard value:T=35N·m {357kgf·cm} {25.8ft·lbf}

10. Check and adjustment of clutch pedal (refer to CL - 12)

CL

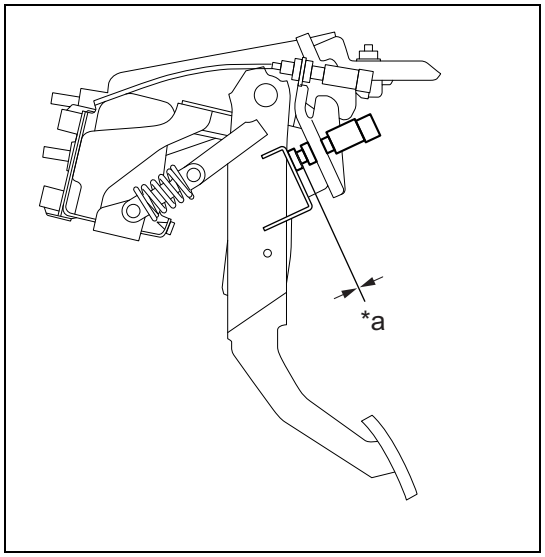

11. Check of clutch switch ASSY
    (1) Check that there is no gap between the clutch switch shaft and clutch pedal stopper with clutch pedal SUB-ASSY not depressed.

Captions in illustration

*a	No gap

12. Installation of power steering computer (refer to PA - 41)
13. Installation of instrument panel under-cover SUB-ASSY No. 1 (refer to ME - 69)
14. Installation of instrument side panel LH (refer to IT - 29)
15. Check and adjustment of clutch pedal (refer to CL - 12)
16. Check of clutch start system (refer to CL - 2)
17. Stop light check
    (1) Check that the stop light illuminates when the brake pedal is depressed.

Adjustment

CL

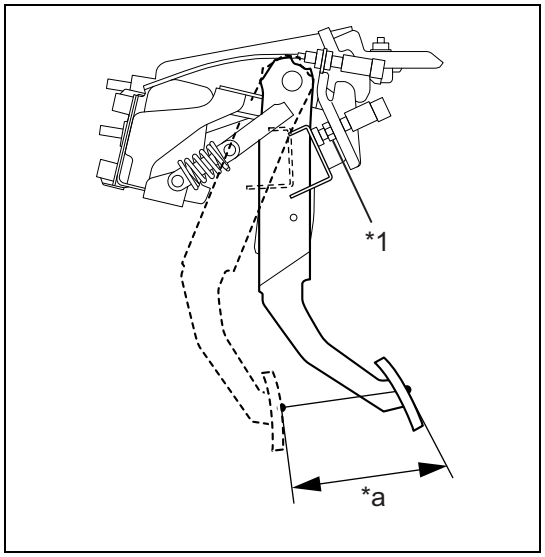

1. Check/adjustment of clutch pedal
    (1) If the full stroke of the clutch pedal SUB-ASSY is out of the standard range, loosen the lock nut on the clutch switch and adjust the full stroke of the clutch pedal with the clutch switch.

Captions in illustration

*1	Lock nut
*a	Clutch pedal stroke

Clutch pedal stroke: 110 to 115 mm {4.331 to 4.528 in}
Standard value:T=8.0N·m {82kgf·cm} {5.9ft·lbf}
CAUTION:
When adjusting the full stroke of clutch pedal SUB-ASSY, do not turn the clutch switch ASSY.
NOTE:
If the clutch switch ASSY cannot adjust the full stroke of clutch pedal SUB-ASSY to the specified value, adjust it by turning the master cylinder push rod.

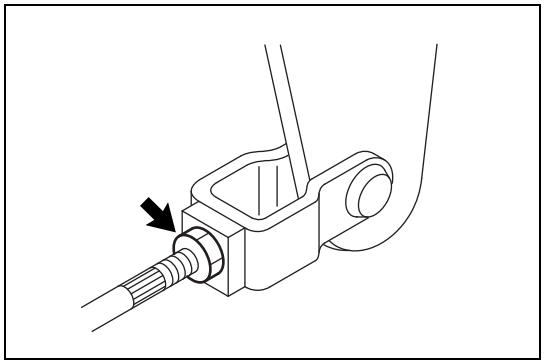

(2) Loosen the push rod lock nut of the clutch master cylinder ASSY.

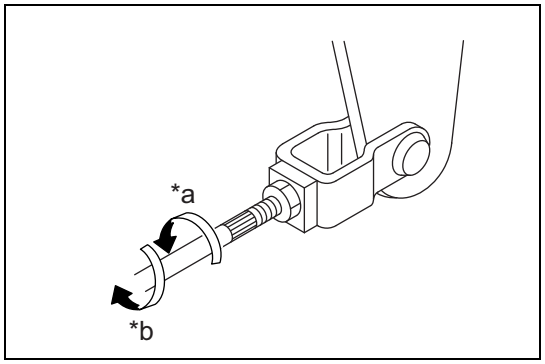

(3) Adjust the clutch master cylinder push rod by turning it.

Captions in illustration

*a	Stroke extended
*b	Stroke contracted

(4) Check that the clutch pedal SUB-ASSY contacts the clutch pedal stopper when the clutch pedal SUB-ASSY is at the full stroke.

(5) Check that the clutch pedal SUB-ASSY contacts the clutch switch side when the pedal is released.

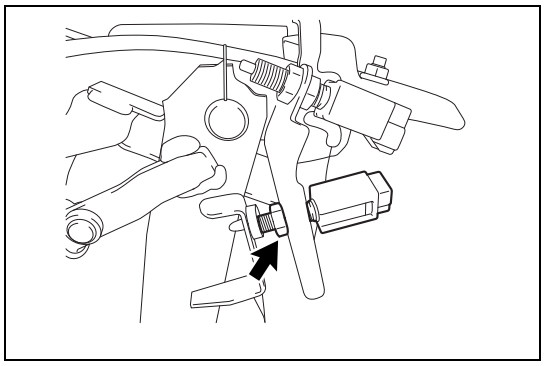

(6) Turn the clutch master cylinder push rod to the contracting side until a clearance is created on the clutch switch side.

(7) Turn the clutch master cylinder push rod to the extending side until it contacts the clutch switch ASSY.

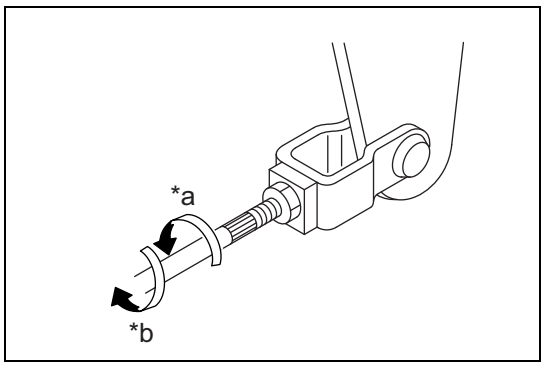

(8) Turn it additional 270° to the contracting side.

Captions in illustration

*a	Stroke extended
*b	Stroke contracted

(9) Move the push rod clevis pin from side to side to check that it operates smoothly.

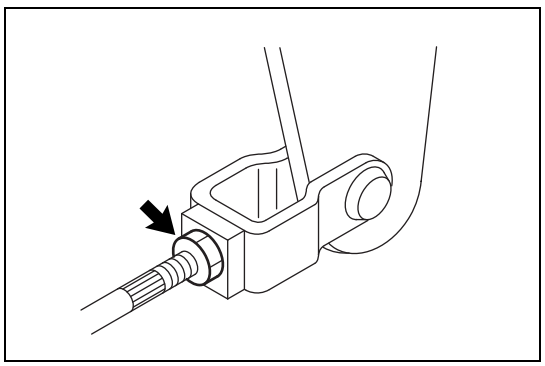

(10) Tighten the clutch master cylinder push rod lock nut of the clutch master cylinder ASSY.
Standard value:T=10N·m {102kgf·cm} {7.4ft·lbf}

(11) Depress the clutch pedal SUB-ASSY 2 or 3 times to check that the clutch pedal SUB-ASSY and release lever operate smoothly. If the clutch pedal SUB-ASSY and release lever do not operate smoothly, execute air bleeding of the clutch line.

(12) Measure the full stroke of the clutch pedal SUB-ASSY and confirm that it is within the standard value. If it is out of the standard value, adjust again.
Clutch pedal stroke: 110 to 115 mm {4.331 to 4.528 in}

CL

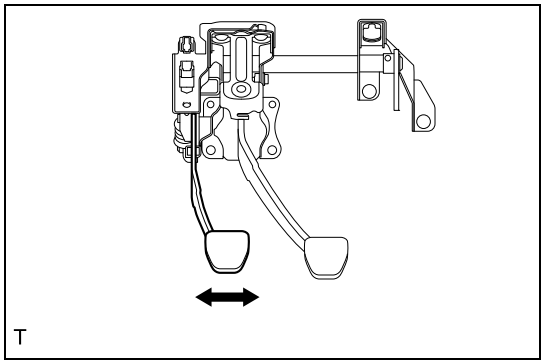

2. Check of clutch pedal SUB-ASSY
   (1) Move the clutch pedal in the lateral direction with a force of approximately 10 N {1.0 kgf, 2.2 lbf} to check that the clutch pedal deflection is within the standard value.
   Deflection of the clutch pedal: 4.0mm {0.158in} or less
   If the deflection exceeds the standard value, replace the clutch pedal SUB-ASSY.

Clutch master cylinder ASSY

Exploded view

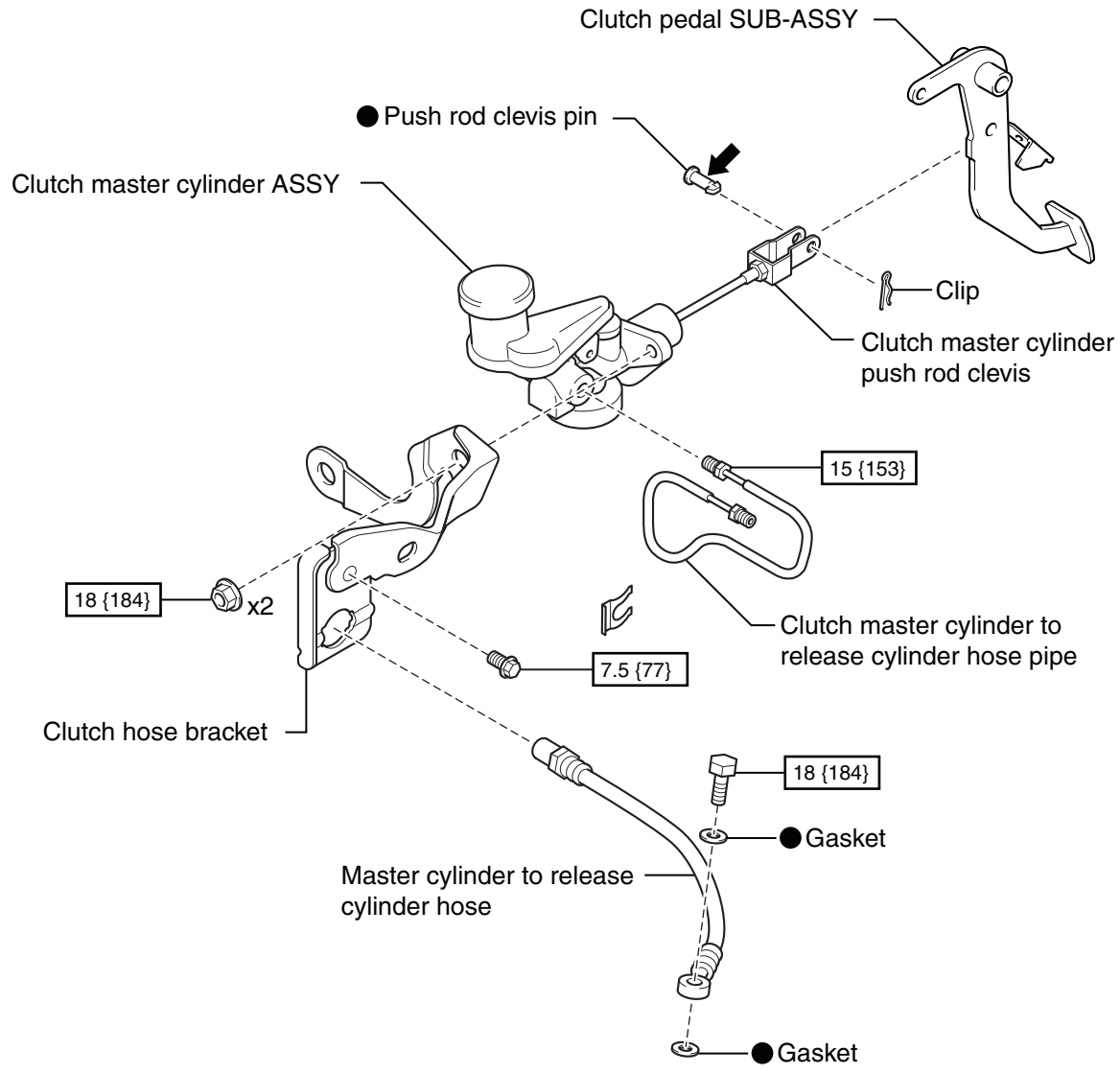

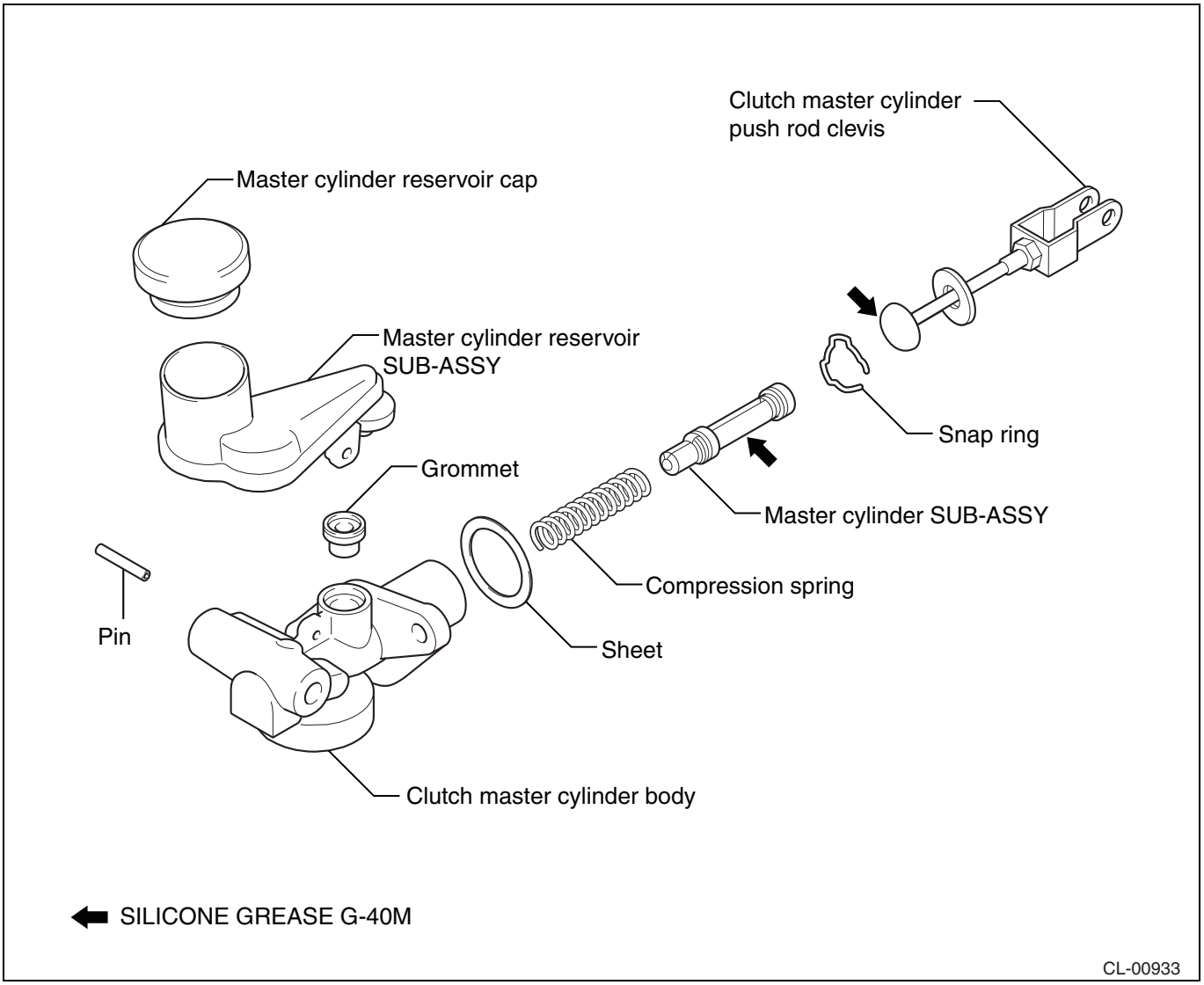

Removal

CAUTION:

- Do not let clutch fluid come into contact with the painted surface. If it is splashed, immediately wash it off with water.
- Remove the clutch master cylinder ASSY as a unit since the clutch hose bracket may be deformed if the clutch master cylinder to release cylinder hose pipe and master cylinder to release cylinder hose when they are still mounted on the vehicle.

1. Draining of clutch fluid
2. Removal of the instrument side panel LH (Refer to IT - 24)
3. Removal of instrument panel under cover SUB-ASSY No. 1 (Refer to ME - 68)
4. Disconnection of master cylinder-to-release cylinder hose (refer to CL - 20)

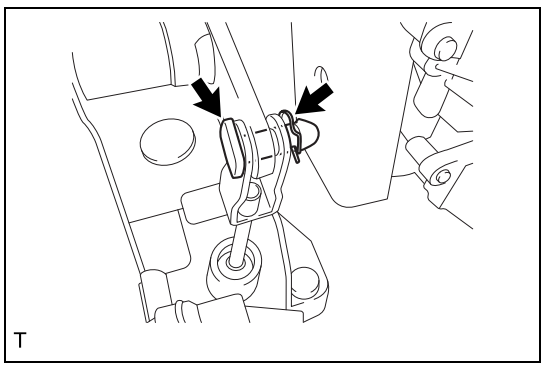

5. Removal of clutch master cylinder ASSY
   (1) Remove the clip from the push rod clevis pin.
   (2) Remove the push rod clevis pin and disconnect the clutch master cylinder push rod clevis from the clutch pedal SUB-ASSY.

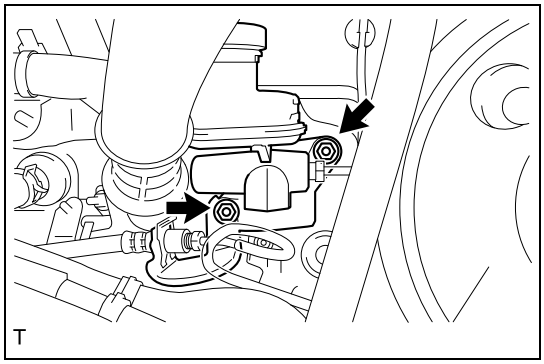

(3) Remove 2 nuts to remove the clutch hose bracket, clutch master cylinder ASSY, and seat.

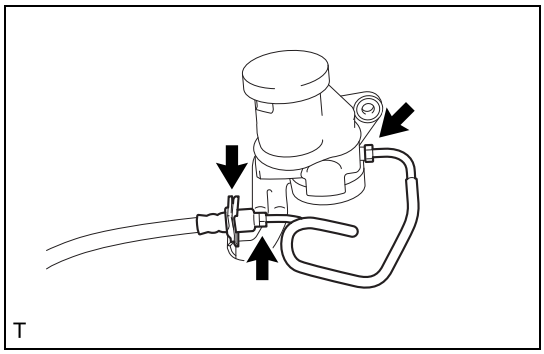

(4) Secure the clutch master cylinder body through an aluminum plate with a vise.
CAUTION:
Do not vise excessively.
(5) Loosen the clutch master cylinder-to-release cylinder hose pipe nut.
(6) Remove the clip and clutch hose bracket.
(7) Disconnect the clutch master cylinder-to-release cylinder hose pipe from the clutch master cylinder ASSY.

Disassembly

1. Removal of master cylinder reservoir SUB-ASSY.
   (1) Remove the master cylinder reservoir cap.
   (2) Secure the clutch master cylinder body through an aluminum plate with a vise.
   CAUTION:
   Do not vise excessively.
   (3) Use a pin punch and hammer to drive out a pin.
   (4) Remove the master cylinder reservoir SUB-ASSY from the clutch master cylinder body.
   (5) Remove the grommet.

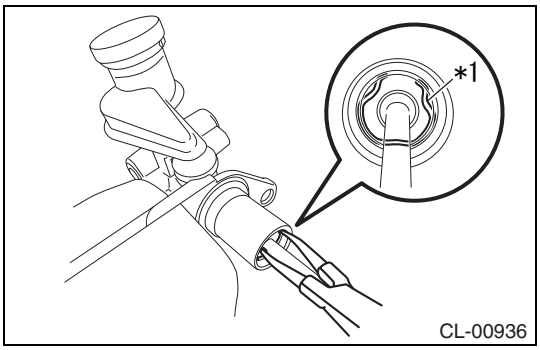

2. Removal of clutch master cylinder kit
   (1) Remove the snap ring.

Captions in illustration

*1	Snap ring

(2) Remove the clutch master cylinder push rod clevis, master cylinder piston SUB-ASSY, and compression spring from the clutch master cylinder body.
CAUTION:
Avoid damage to the inner surface of the clutch master cylinder body.

Assembly

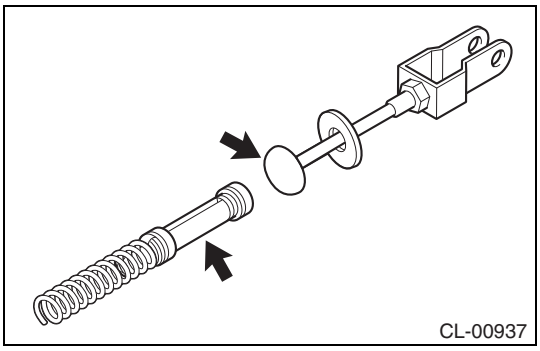

1. Installation of clutch master cylinder kit
   (1) Apply SILICONE GREASE G40M to the points shown in the figure.

Captions in illustration

➡	SILICONE GREASE G40M

(2) Install the compression spring, master cylinder piston SUB-ASSY, and clutch master cylinder push rod clevis to the clutch master cylinder body.

CL

CAUTION:
Avoid damage to the inner surface of the clutch master cylinder body.

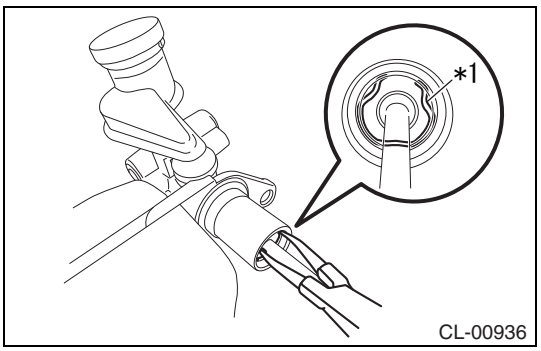

(3) Install the snap ring.

Captions in illustration

*1	Snap ring

CAUTION:
Do not vise the cylinder portion to avoid deformation.

2. Installation of master cylinder reservoir SUB-ASSY
   (1) Install the grommet.
   (2) Install the master cylinder reservoir SUB-ASSY to the clutch master cylinder body.
   (3) Use a pin punch and hammer to drive in a pin.
   (4) Install the master cylinder reservoir cap.

Installation

1. Installation of clutch master cylinder-to-flexible hose tube
   (1) Install the master cylinder-to-release cylinder hose to the clutch hose bracket with the clip.
   CAUTION:
   - Install the master cylinder-to-release cylinder hose with the marking facing upward.
   - Install the clip securely as far as it will go.

   (2) Use a union nut wrench to install the master cylinder-to-release cylinder hose to the clutch master cylinder to release cylinder hose pipe.
   Standard value:T=15N·m {153kgf·cm} {11.1ft·lbf}
   CAUTION:
   When tightening by combining a torque wrench and union nut wrench, calculate the torque according to the calculation.

   (3) Use a union nut wrench to install the clutch master cylinder-to-release cylinder hose pipe to the clutch master cylinder ASSY.
   Standard value:T=15N·m {153kgf·cm} {11.1ft·lbf}
   CAUTION:
   When tightening by combining a torque wrench and union nut wrench, calculate the torque according to the calculation.

2. Installation of clutch master cylinder ASSY
   (1) Install the seat to the clutch master cylinder ASSY.
   (2) Install the clutch master cylinder ASSY and the clutch hose bracket with the 2 nuts.
   Standard value:T=18N·m {184kgf·cm} {13.3ft·lbf}
   (3) Apply NIGTIGHT LYW No.2 grease to the inner and outer surfaces of a new push rod clevis pin.
   (4) Connect the clutch master cylinder push rod clevis to the clutch pedal with the push rod clevis pin.
   NOTE:
   Install the push rod clevis pin from the left side of vehicle.
   (5) Install the clip to the push rod clevis pin.

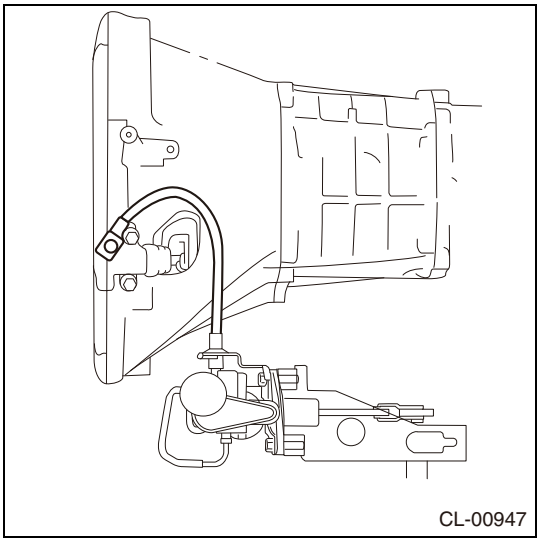
CL-00947

(6) Connect the master cylinder-to-release cylinder hose to the clutch release cylinder ASSY with the union bolt through 2 new gaskets.
Standard value:T=18N·m {184kgf·cm} {13.3ft·lbf}
CAUTION:
- When tightening by combining a torque wrench and union nut wrench to extend the whole length, the actual torque will be excessive if tightened until the reading of the torque wrench reaches the specified tightening torque. (Refer to IN - 6)
- When restoring the clutch release cylinder ASSY, check that the clutch hose is deflected in the same direction as shown in the figure.
- Install the master cylinder-to-release cylinder hose with the marking facing upward.

3. Connection of master cylinder-to-release cylinder hose (refer to CL - 21)
4. Filling of clutch fluid (refer to CL - 3)
5. Air bleeding of clutch pipeline (refer to CL - 4)
6. Clutch fluid leakage check
7. Clutch fluid amount check (refer to CL - 4)
8. Check and adjustment of clutch pedal (refer to CL - 12)
9. Installation of instrument panel under cover SUB-ASSY NO. 1 (Refer to ME - 69)
10. Installation of the instrument side panel LH (Refer to IT - 29)

Clutch release cylinder ASSY

Exploded view

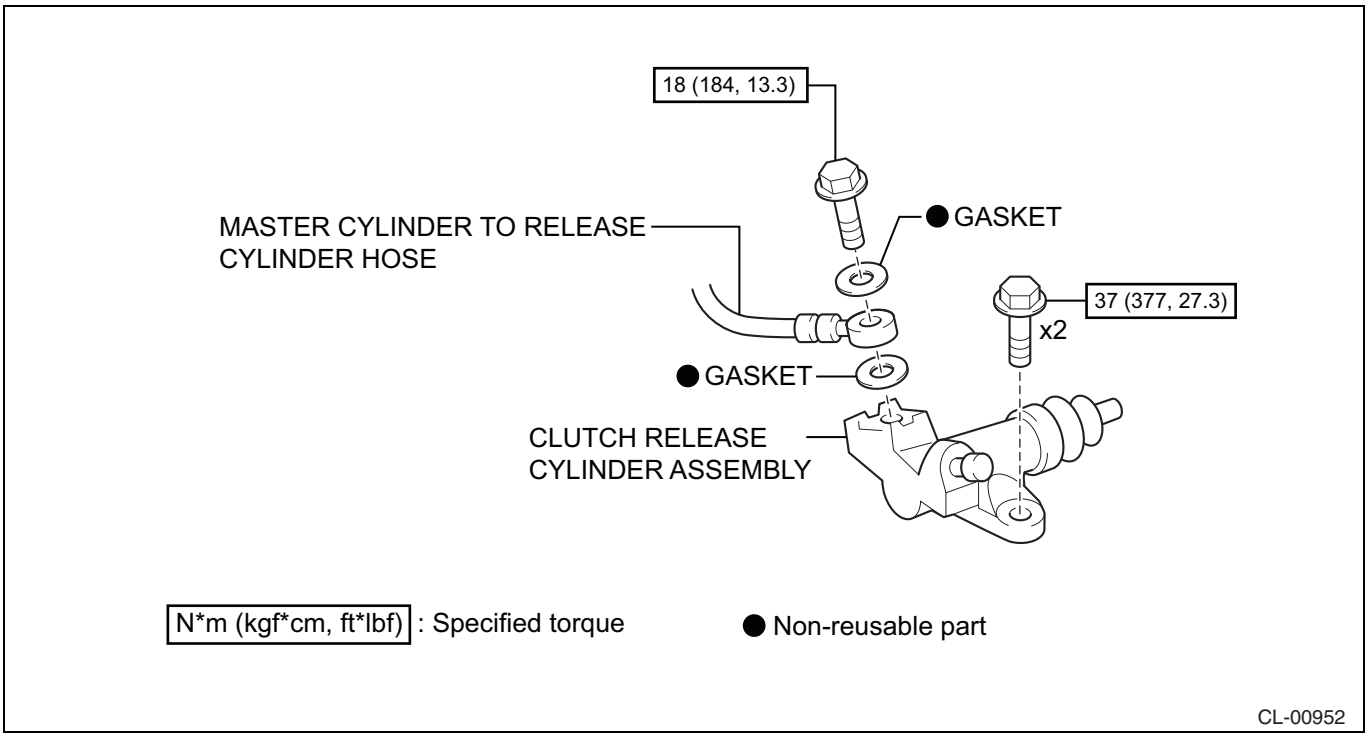

Removal

CL

1. Handling/working precautions
   CAUTION:
   Do not let clutch fluid come into contact with the painted surface. If it is splashed, immediately wash it off with water.

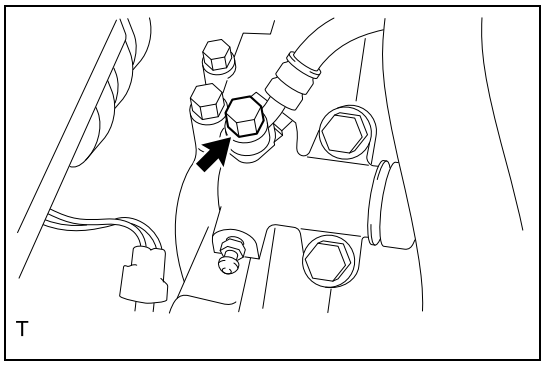

2. Disconnection of master cylinder-to-release cylinder hose
   (1) Remove the union bolt and 2 gaskets and disconnect the master cylinder-to-release cylinder hose from the clutch release cylinder ASSY.

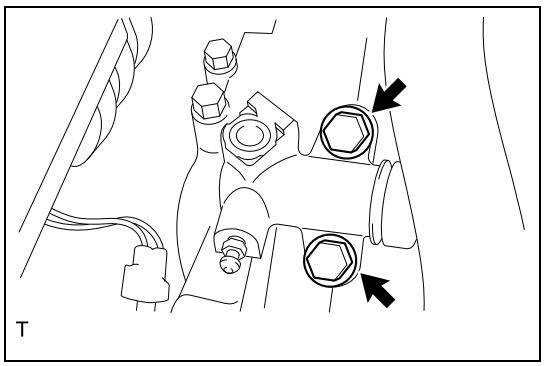

3. Removal of clutch release cylinder ASSY
   (1) Remove 2 bolts to remove the clutch release cylinder ASSY.

Installation

1. Installation of clutch release cylinder ASSY
   (1) Install the clutch release cylinder ASSY with the 2 bolts.

Standard value:T=37N·m {377kgf·cm} {27.3ft·lbf}

2. Connection of master cylinder-to-release cylinder hose
   (1) Connect the master cylinder-to-release cylinder hose to the clutch release cylinder ASSY with the union bolt through 2 new gaskets.
   Standard value:T=18N·m {184kgf·cm} {13.3ft·lbf}

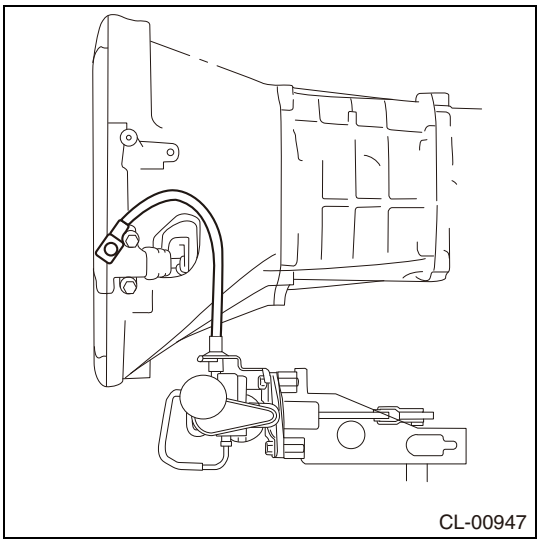
CL-00947

CAUTION:
- When tightening by combining a torque wrench and union nut wrench to extend the whole length, the actual torque will be excessive if tightened until the reading of the torque wrench reaches the specified tightening torque. (Refer to IN - 6)
- When restoring the clutch release cylinder ASSY, check that the clutch hose is deflected in the same direction as shown in the figure.
- Install the master cylinder-to-release cylinder hose with the marking facing upward.

3. Filling of clutch fluid (refer to CL - 3)
4. Air bleeding of clutch pipeline (refer to CL - 4)
5. Clutch fluid leakage check
6. Clutch fluid amount check (refer to CL - 4)

Clutch

Exploded view

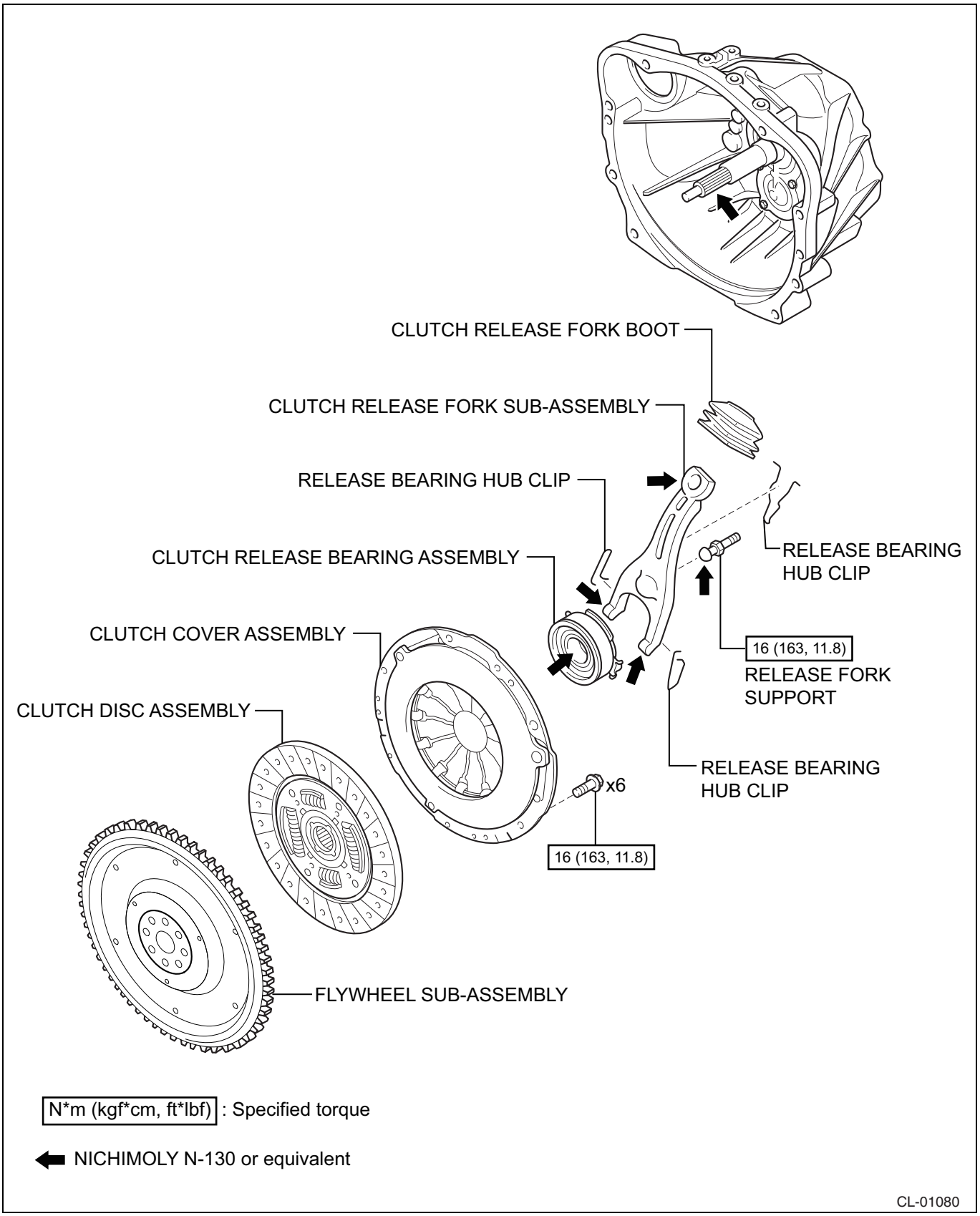

Removal

1. Removal of manual transmission ASSY (refer to MT - 18)

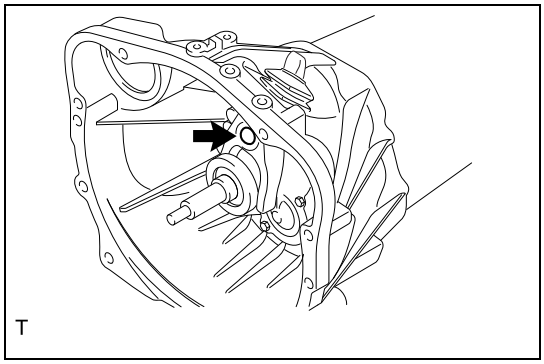

2. Removal of clutch release fork SUB-ASSY
   (1) Remove the clutch release fork SUB-ASSY and the release fork support.
   (2) Remove the clutch release fork SUB-ASSY and the clutch release bearing ASSY from the manual transmission ASSY.
   (3) Clean the input shaft and release fork support.

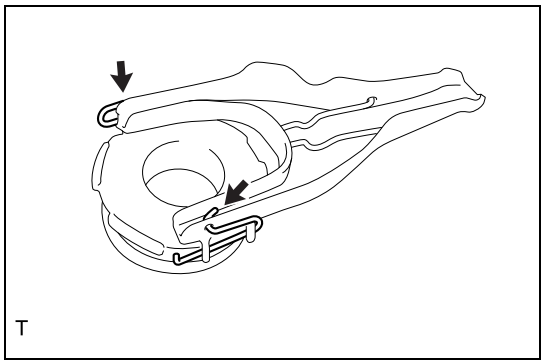

3. Removal of clutch release bearing ASSY
   (1) Remove 2 release bearing hub clips to remove the clutch release bearing ASSY.

4. Removal of release bearing hub clip
   (1) Remove 3 release bearing hub clips from the clutch release bearing ASSY.

5. Cleaning of clutch release fork SUB-ASSY and clutch release bearing ASSY
   (1) Clean the clutch release fork SUB-ASSY and clutch release bearing ASSY.

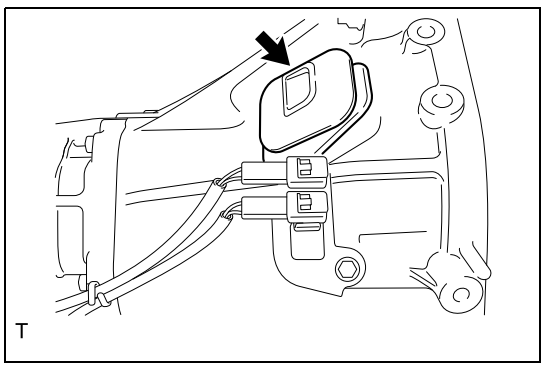

6. Removal of clutch release fork boot
   (1) Remove the clutch release fork boot from the manual transmission ASSY.

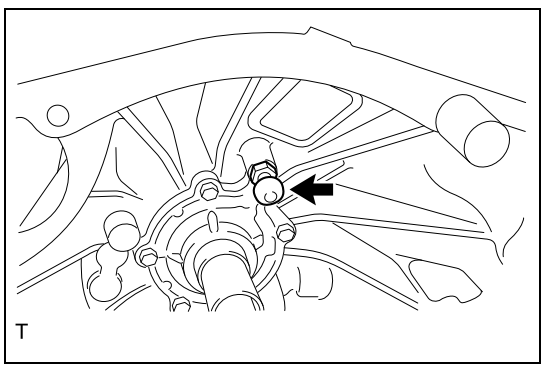

7. Removal of release fork support
   (1) Remove the release fork support from the manual transmission ASSY.

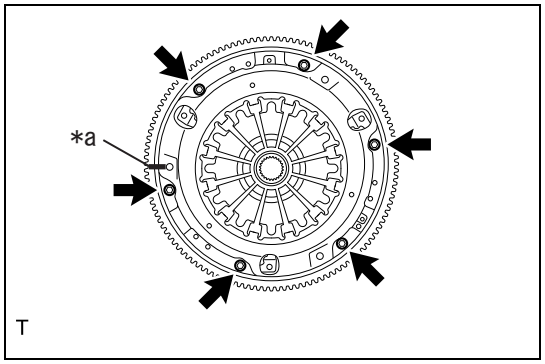

8. Removal of clutch cover ASSY
   (1) Mark an alignment mark on the clutch cover ASSY and the flywheel.

Captions in illustration

*a	Alignment marks

   (2) Remove 6 bolts to remove the clutch cover ASSY.
   CAUTION:
   Prevent the clutch disc ASSY from falling off.

9. Removal of clutch disc ASSY
   CAUTION:
   Keep oil and foreign substances away from the lining area, pressure plate, and flywheel clutch disc sliding area of the clutch disc ASSY.

Inspection

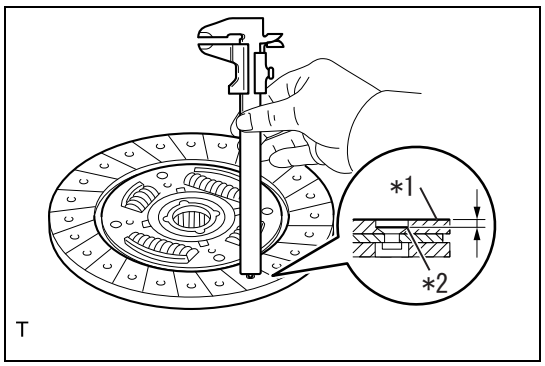

1. Check of clutch disc ASSY
   (1) Use a caliper gauge to check the wear of the facing.

Captions in illustration

*1	Facing
*2	Rivet

   Limit: 0.8 mm {0.031 in} (Depth to rivet head)
   NOTE:
   Replace the clutch disc ASSY if below the limit.

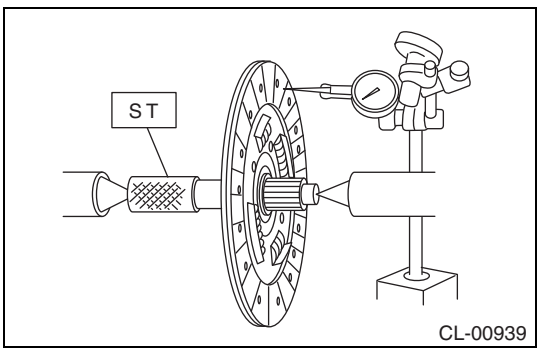

   (2) Using a dial gauge and the SST, check the deflection of the clutch disc ASSY by turning it.
   SST 499747100
   Limit: 0.7 mm {0.028in}
   NOTE:
   Replace the clutch disc ASSY if above the limit.

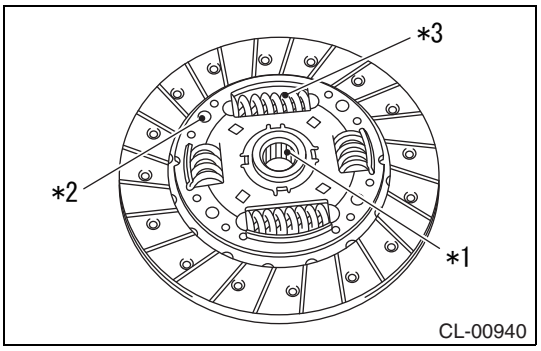

   (3) Visually check the following items, and if any malfunction is found, replace the clutch disc ASSY.
      1. Worn spline
      2. Loose rivet
      3. Worn damper spring

Captions in illustration

*1	Spline
*2	Rivet
*3	Damper spring

CL

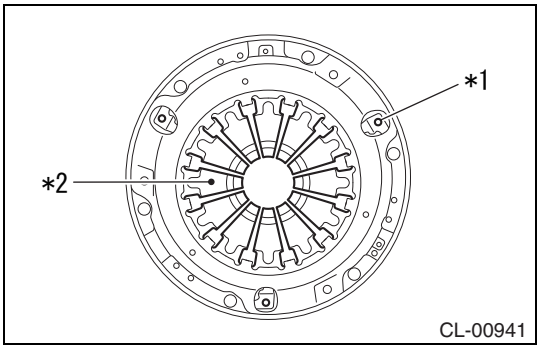

2. Check of clutch cover ASSY
   (1) Visually check the following items, and if any malfunction is found, replace the clutch cover ASSY.
      1. Loose thrust rivet
      2. Damaged or worn bearing contact area at the center of diaphragm spring

Captions in illustration

*1	Thrust rivet
*2	Diaphragm spring

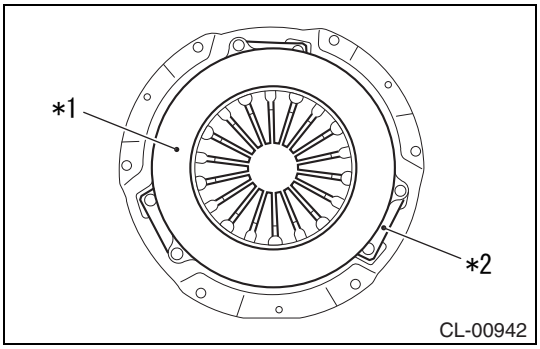

      3. Damaged or worn disc contact surface of the pressure plate
      4. Loose strap plate installation area
      5. Worn diaphragm spring sliding area

Captions in illustration

*1	Pressure plate
*2	Strap plate

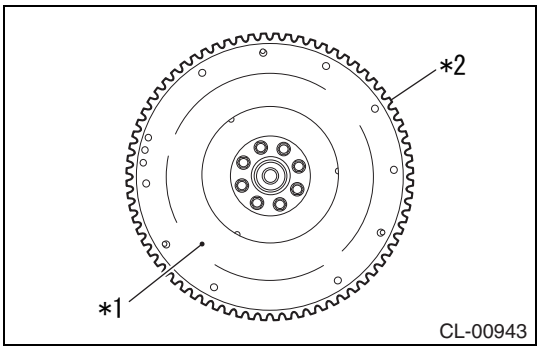

3. Check of flywheel SUB-ASSY
   (1) Check for damage and wear at the facing sliding area and the ring gear.

Captions in illustration

*1	Flywheel SUB-ASSY
*2	Ring gear

   NOTE:
   If defective, replace the flywheel SUB-ASSY.
   (2) Check for rotation stuck, noise, and excessive play by rotating while applying pressure in the thrust direction.
   NOTE:
   If defective, replace the flywheel SUB-ASSY.

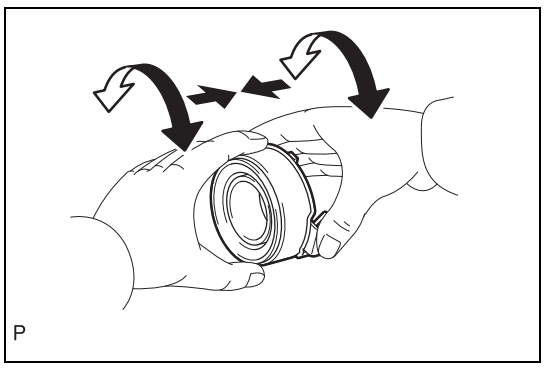

4. Check of clutch release bearing ASSY
   (1) Check for rotation stuck and noise by rotating while applying pressure in the thrust direction.
   CAUTION:
   Do not wash the clutch release bearing ASSY since it is filled with grease.
   NOTE:
   If any stuck or noise is observed, replace the clutch release bearing ASSY.

CL

Installation

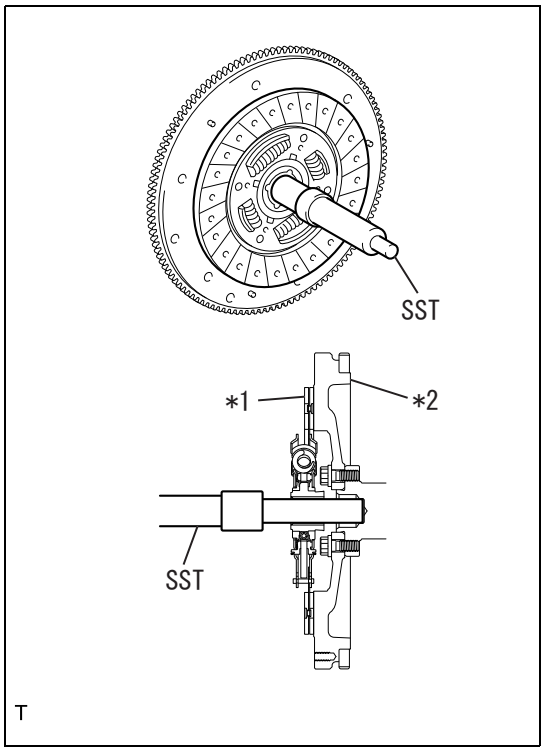

1. Installation of clutch disc ASSY
   (1) Center the clutch disc ASSY with the SST.

Captions in illustration

*1	Clutch disc ASSY
*2	Flywheel

SST 499747100

CAUTION:

Be careful not to install the clutch disc ASSY in the wrong direction.

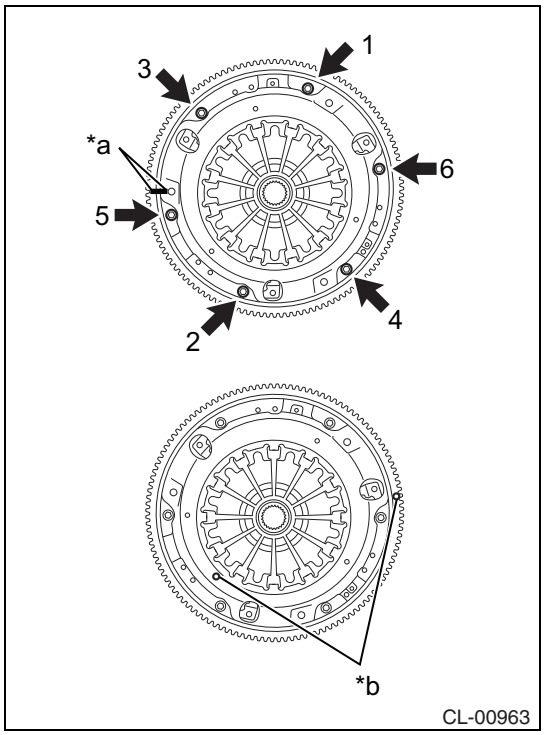

2. Installation of clutch cover ASSY
   (1) Match the alignment marks of the clutch cover ASSY and the flywheel and install the clutch cover ASSY.

NOTE:

When replacing the flywheel or the clutch cover with a new one, position the clutch cover so that the angle formed by the imbalance marks (paint marks) on the flywheel and clutch cover becomes 120 °or more. (The imbalance marks indicate the direction of residual imbalance.)

Captions in illustration

*a	Alignment marks
*b	Imbalance mark (paint mark)

   (2) Lightly tighten the bolts from the upper one near the flywheel knock pin and equally tighten the 6 bolts in the order shown in the figure after checking that the clutch disc ASSY is positioned at the center by lightly shaking the SST from side to side and up and down.

SST 499747100

Standard value:T=16N·m {163kgf·cm} {11.8ft·lbf}

CAUTION:

Equally tighten the bolts in several times.

   (3) Remove the SST.

3. Installation of release fork support
   (1) Install the release fork support to the manual transmission ASSY.
   Standard value:T=16N·m {163kgf·cm} {11.8ft·lbf}
4. Installation of clutch release fork boot
   (1) Install the clutch release fork boot to the manual transmission ASSY.
5. Installation of release bearing hub clip.
   (1) Install 3 release bearing hub clips to the clutch release bearing ASSY.

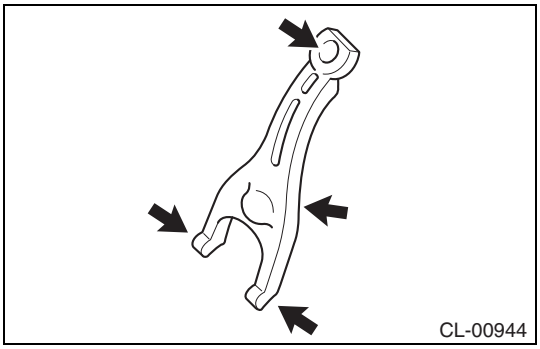
CL-00944

6. Installation of clutch release fork SUB-ASSY
   (1) Apply NICHIMOLY N-130 to the points of the clutch release fork SUB-ASSY shown in the figure.

Captions in illustration

➡	NICHIMOLY N-130

NOTE:
- Contacting surface to release fork support (filling the recess)
- Contacting surface to release cylinder push rod (filling the recess)
- Contacting surface to release bearing hub

   (2) Install the clutch release fork SUB-ASSY to the clutch release bearing ASSY.

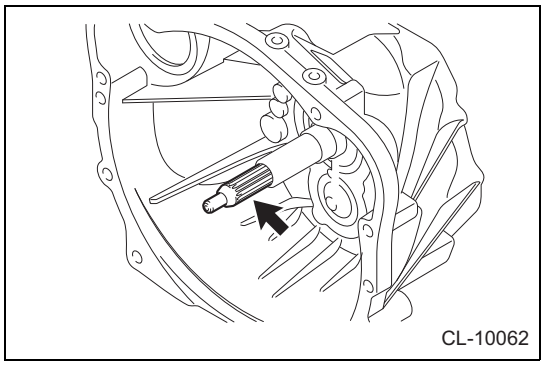
CL-10062

7. Installation of clutch release bearing ASSY
   (1) Apply NICHIMOLY N-130 to the input shaft spline area and inner periphery of the clutch release bearing ASSY for the manual transmission ASSY.

Captions in illustration

➡	NICHIMOLY N-130

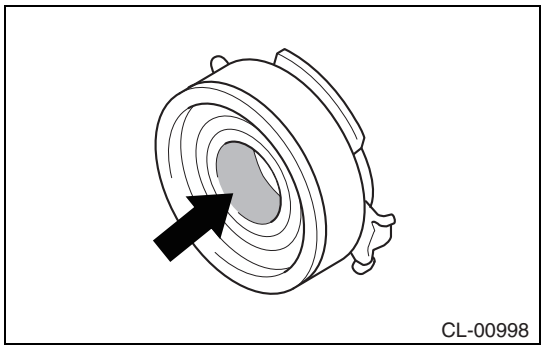
CL-00998

   (2) Install the clutch release bearing ASSY and the clutch release fork SUB-ASSY to the manual transmission ASSY.
   CAUTION:
   After installation, make sure the clutch release bearing ASSY slides smoothly by moving the clutch release fork SUB-ASSY backward and forward.

8. Installation of manual transmission ASSY (refer to MT - 24)

Clutch pedal switch

Exploded view

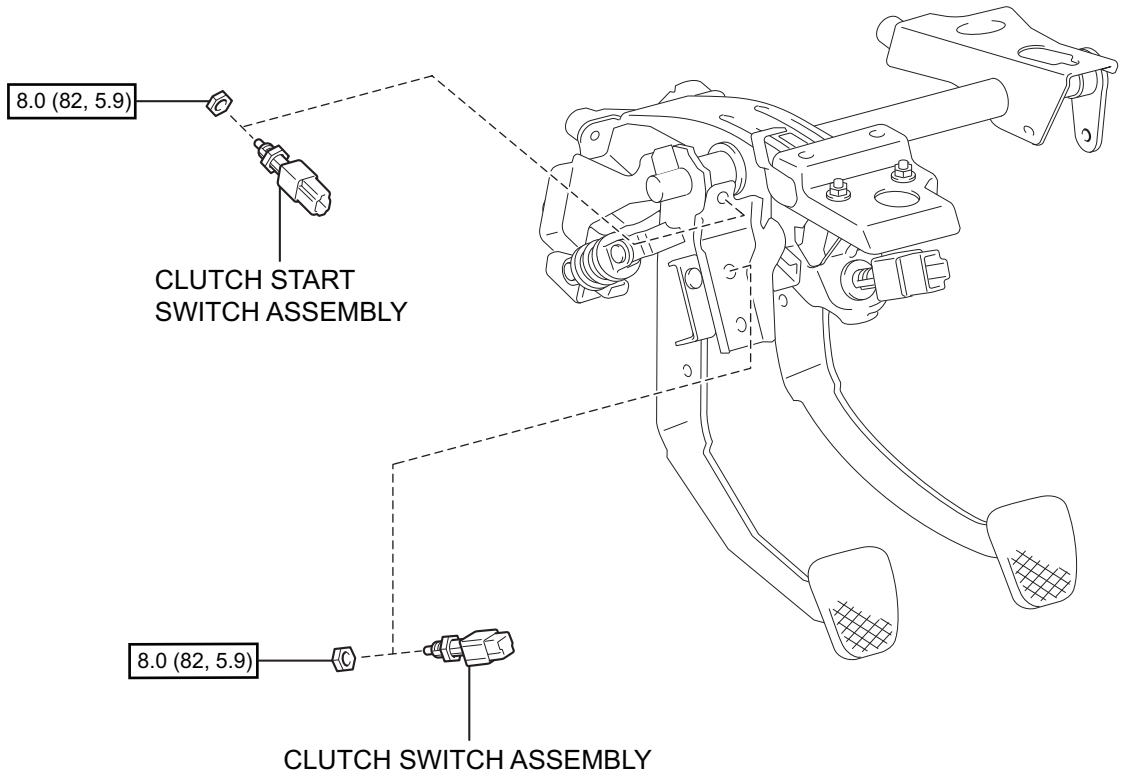

N*m (kgf*cm, ft*lbf) : Specified torque

CL-00951

CL

Removal

1. Removal of instrument side panel LH (refer to IT - 24)
2. Removal of instrument panel under cover SUB-ASSY No. 1 (refer to ME - 68)
3. Removal of clutch switch ASSY
   (1) Remove the clutch switch connector.

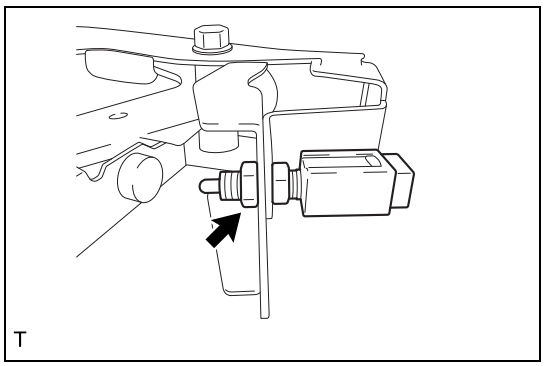

   (2) Remove the nut and then remove the clutch switch ASSY from the clutch pedal support SUB-ASSY.

4. Removal of clutch pedal support SUB-ASSY (refer to CL - 7)

5. Removal of clutch start switch ASSY
   (1) Disconnect the clutch start switch connector.

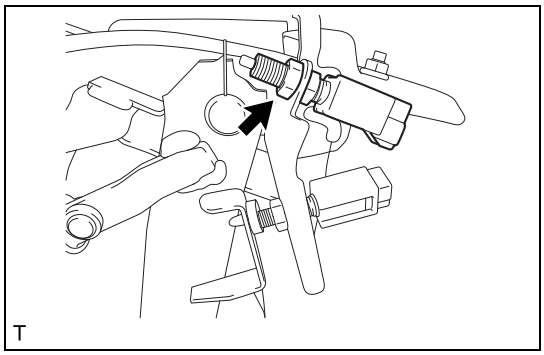

   (2) Remove the nut and then remove the clutch start switch ASSY from the clutch pedal support SUB-ASSY.

Installation

1. Installation of clutch start switch ASSY
   (1) Install the clutch start switch ASSY to the clutch pedal support SUB-ASSY with the nut.
   Standard value:T=8.0N·m {82kgf·cm} {5.9ft·lbf}
   (2) Connect the clutch start switch connector.

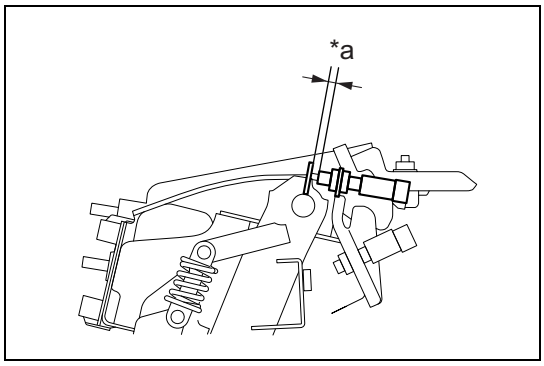

   (3) Measure the gap shown in the figure with the clutch pedal fully depressed.

Captions in illustration

*a	Clearance

   Normal clearance: 3.5 to 4.0 mm {0.138 to 0.157 in}

2. Installation of clutch pedal support SUB-ASSY (refer to CL - 11)
3. Installation of clutch switch ASSY
   (1) Install the clutch switch ASSY to the clutch pedal support SUB-ASSY with the nut.
   Standard value:T=8.0N·m {82kgf·cm} {5.9ft·lbf}
   (2) Connect the clutch switch connector.

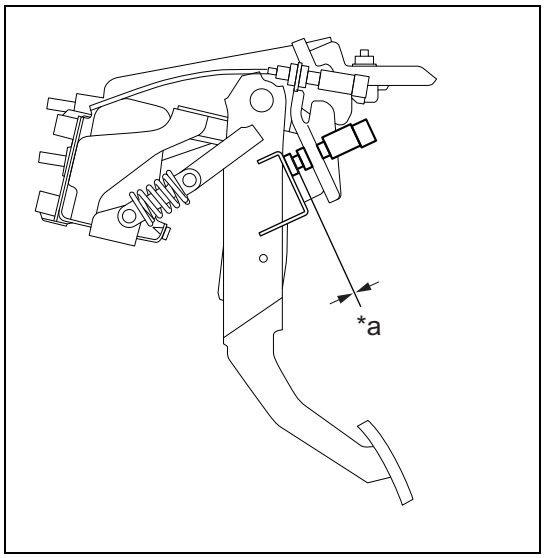

   (3) Check that a gap is not created when the clutch pedal is not depressed.

Captions in illustration

*a	No gap

4. Installation of instrument panel under cover SUB-ASSY No. 1 (refer to ME - 69)

5. Installation of instrument side panel LH (refer to IT - 29)
6. Check of clutch start system (refer to CL - 2)

On-vehicle inspection

1. Check of clutch start switch ASSY
   (1) Make sure that engine does not start with clutch pedal not depressed.
   (2) Make sure that engine starts with the clutch pedal fully depressed. If necessary, replace the clutch start switch ASSY with a new one.

Unit inspection

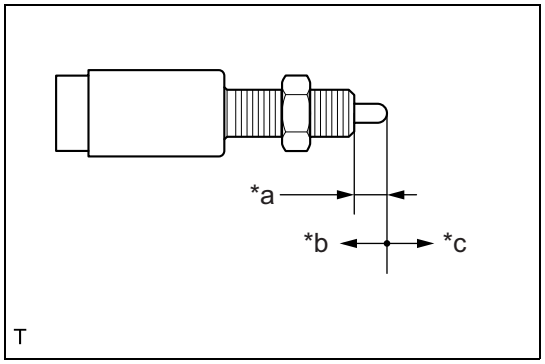

1. Check of clutch start switch ASSY
   (1) Measure the resistance between terminals when operating the shaft.

Captions in illustration

*a	4.0 to 5.5 mm {0.157 to 0.217 in}
*b	ON
*c	OFF

Resistance

Inspection terminals	Inspection conditions	Standard value
1 - 2	When shaft is pressed in (ON)	Less than 1 Ω
	When shaft is not pressed in (OFF)	10 k Ωor more

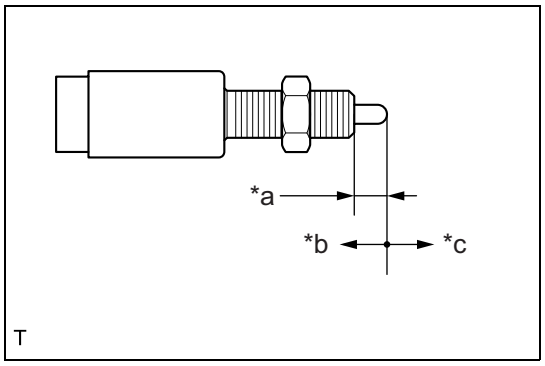

2. Check of clutch switch ASSY
   (1) Measure the resistance between terminals when operating the shaft.

Captions in illustration

*a	5.0 to 6.5 mm {0.197 to 0.256 in}
*b	ON
*c	OFF

Resistance

Inspection terminals	Inspection conditions	Standard value
1 - 2	When shaft is pressed in (ON)	Less than 1 Ω
	When shaft is not pressed in (OFF)	10 k Ωor more

CL

Manual transmission / transaxle

Manual transmission system
Symptom table MT-3

Manual transmission oil
Replacement MT-4
On-vehicle inspection. MT-4

Manual transmission extension housing oil seal
Exploded view MT-6
Replacement MT-6

Neutral position switch
Exploded view MT-8
Removal. MT-8
Installation MT-9
Unit inspection MT-9

Back-up light switch
Exploded view MT-10
Removal. MT-10
Installation MT-11
Unit inspection MT-11

Floor shift, shift lever ASSY
Exploded view MT-12
Removal. MT-12
Installation MT-13
Adjustment. MT-14

Manual transmission ASSY
Exploded view MT-15
Removal. MT-18
Installation MT-24

Transmission unit ASSY
Exploded view MT-30
Disassembly. MT-36
Inspection. MT-50
Assembly MT-53

Input shaft ASSY
Exploded view MT-71
Disassembly. MT-71
Inspection. MT-73
Assembly MT-73

Output shaft ASSY
Exploded view MT-75
Disassembly. MT-77
Inspection. MT-79
Assembly MT-84

Counter gear ASSY

Exploded view MT-88
Disassembly MT-89
Inspection MT-92
Assembly MT-95

Manual transmission system

Symptom table

Symptoms	Inspection items	Reference pages
Noise is emitted.	Oil (insufficient)	MT - 4
	Oil (type or deterioration)	MT - 4
	Gear (wear or damage)	-
	Bearing (wear or damage)	-
Oil leaks.	Oil (excess)	MT - 4
	Gasket (damage)	-
	Oil seal (wear or damage)	MT - 6
	O-ring (wear or damage)	-
Hard to shift, or does not shift.	Synchronizer ring (wear or damage)	-
	Shift key spring (damage)	-
	Oil (type or deterioration)	-
Jumps to next gear.	Locking ball spring (damage)	-
	Shift fork (wear or damage)	-
	Gear (wear or damage)	-
	Bearing (wear or damage)	-
Hard to shift, or does not shift (at 1st-2nd operation).	Stopper (improper adjustment)	MT - 14

Manual transmission oil

Replacement

1. Drain of manual transmission oil
   (1) Park the vehicle on a level road.

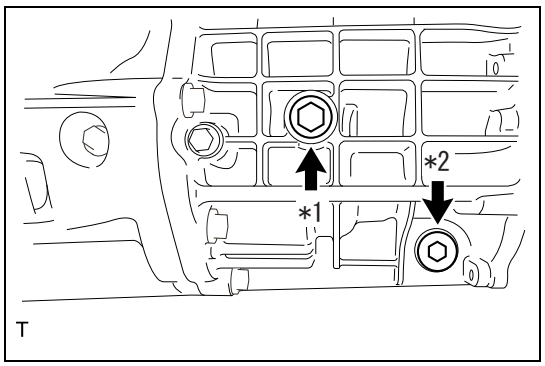

   (2) Remove the transmission filler plug and the gasket.

Captions in illustration

*1	Transmission filler plug
*2	Transmission drain plug

   (3) Remove the transmission drain plug and gasket to drain oil.
2. Fill of manual transmission oil
   (1) Install the transmission drain plug via a new gasket.
   Standard value:T=37N·m {377kgf·cm} {27.3ft·lbf}
   (2) Pour oil until it overflows from the filler plug hole.
   Oil amount (reference): 2.2 L {0.6 US gal, 0.5 Imp gal}
   Recommended product: MG GEAR OIL SPECIAL-II (API GL-3, SAE 75W-90)
   Substitute product: GL-3 or later (75W-90)
   CAUTION:
   - When using the substitute product for transmission gear oil, the function and performance may be inferior.
   - Do not mix different oils.

MT

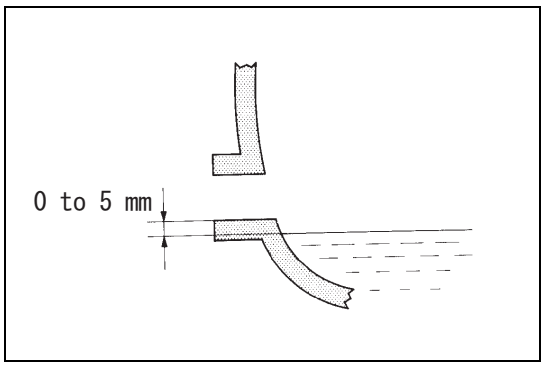

3. Check of manual transmission oil
   (1) Check that oil is filled to the level between 0 and 5 mm {0 to 0.197 in} from the bottom of the transmission filler plug hole.
   CAUTION:
   - Excess or shortage of oil may lead to trouble.
   - Check the oil amount after driving.
   (2) Install the transmission filler plug via a new gasket.
   Standard value:T=37N·m {377kgf·cm} {27.3ft·lbf}
   CAUTION:
   Thoroughly wipe away the spilled oil.
4. Check of manual transmission oil leakage

On-vehicle inspection

1. Check of manual transmission oil
   (1) Park the vehicle on a level road.

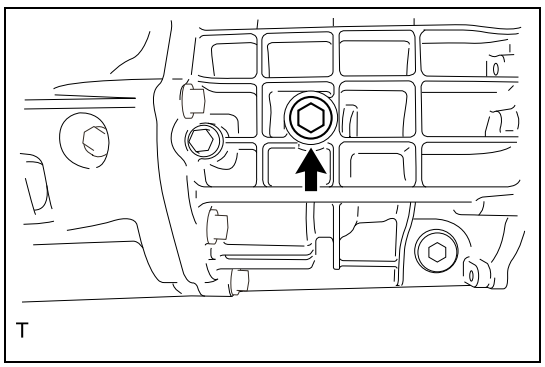

   (2) Remove the transmission filler plug and the gasket.

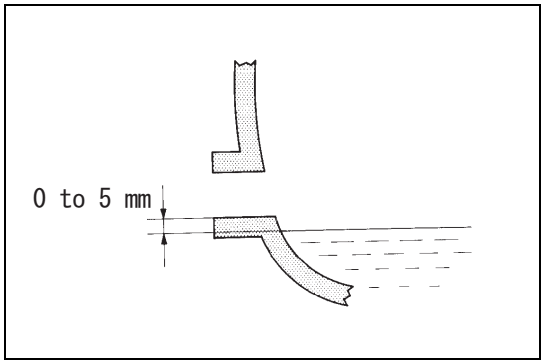

(3) Check that oil is filled to the level between 0 and 5 mm {0 to 0.197 in} from the bottom of the transmission filler plug hole.
CAUTION:
- Excess or shortage of oil may lead to trouble.
- When replacing oil, check the oil amount after driving.

(4) If the oil amount is insufficient, check for oil leaks.
(5) Install the transmission filler plug via a new gasket.
Standard value:T=37N·m {377kgf·cm} {27.3ft·lbf}

Manual transmission extension housing oil seal

Exploded view

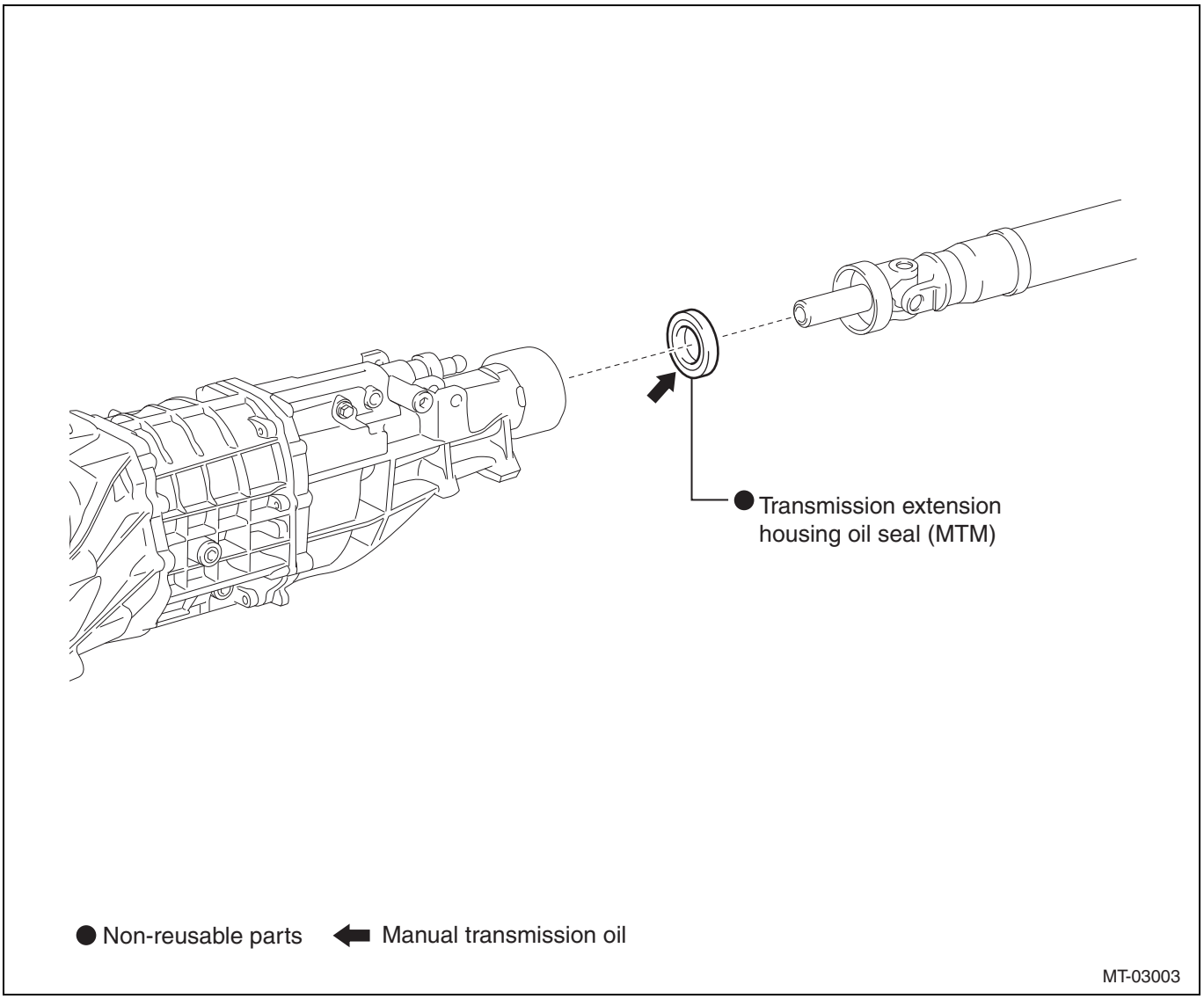

NOTE:
Be sure to use the recommended product or the substitute product for manual transmission oil. (Refer to MT - 4)

Replacement

1. Drain of transmission gear oil (Refer to MT - 4)
2. Removal of propeller shaft with center bearing ASSY (Refer to DP - 14)

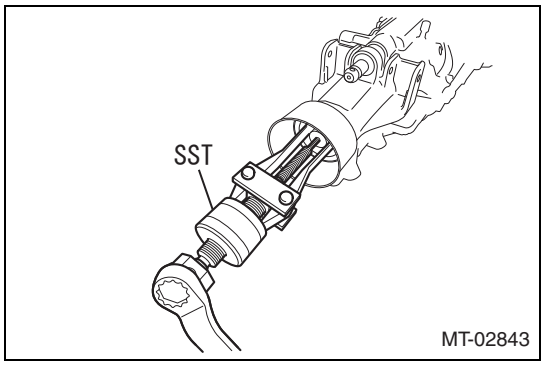

3. Removal of transmission extension housing oil seal (MTM)
   (1) Use the SST to remove the transmission extension housing oil seal (MTM).
   SST 398527700

4. Installation of transmission extension housing oil seal (MTM)
   (1) Apply a small amount of manual transmission oil to the lip of a new transmission extension housing oil seal (MTM).
   NOTE:
   Be sure to use the recommended product or the substitute product for manual transmission oil. (Refer to MT - 4)

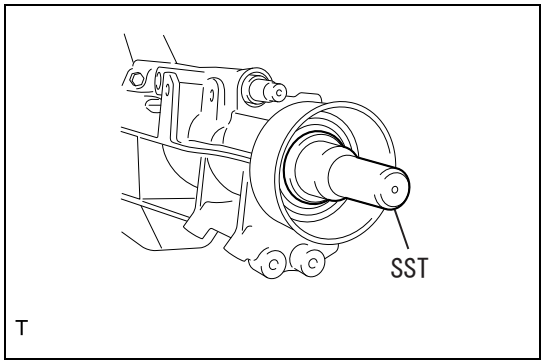

   (2) Use the SST to install the transmission extension housing oil seal (MTM).
   SST 09325-20010
   Standard value: 0.1 to 1.1 mm {0.00394 to 0.0433in} (from end face of extension housing)
   CAUTION:
   - Avoid damage to the lip of the transmission extension housing oil seal (MTM).
   - Be careful not to install the transmission extension housing oil seal (MTM) in the wrong direction.
   - Do not drive in the transmission extension housing oil seal (MTM) excessively.

5. Installation of propeller shaft with center bearing ASSY (Refer to DP - 16)
   CAUTION:
   Thoroughly wipe away the spilled oil.

Neutral position switch

Exploded view

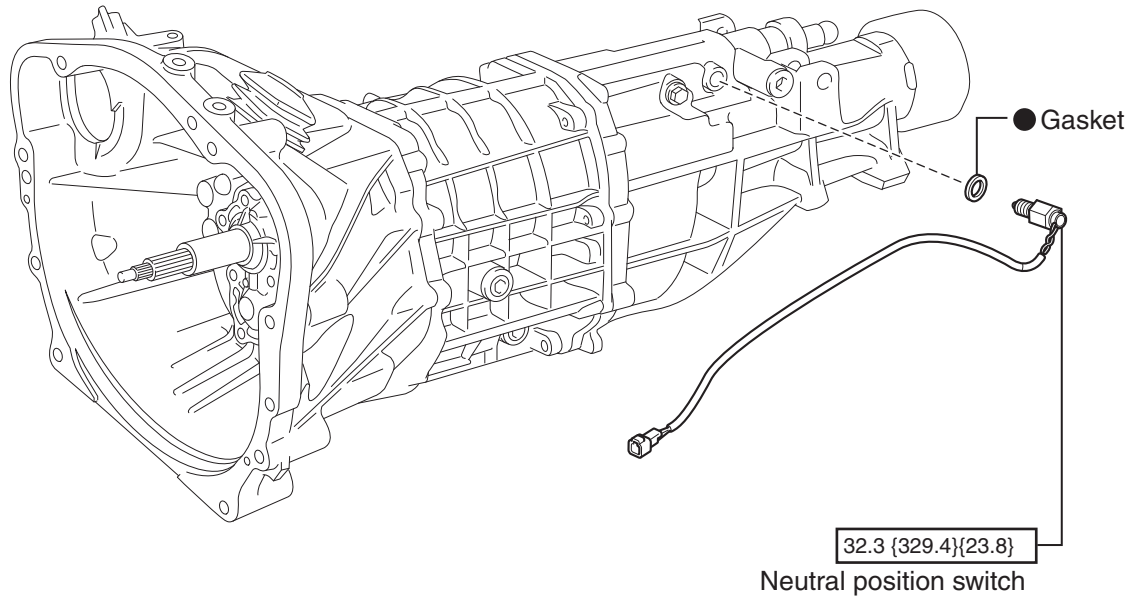

MT

N•m {kgf•cm, ft•lbf} : Tightening torque ● Non-reusable parts

MT-02911

Removal

1. Removal of manual transmission ASSY
   (Refer to MT - 18)

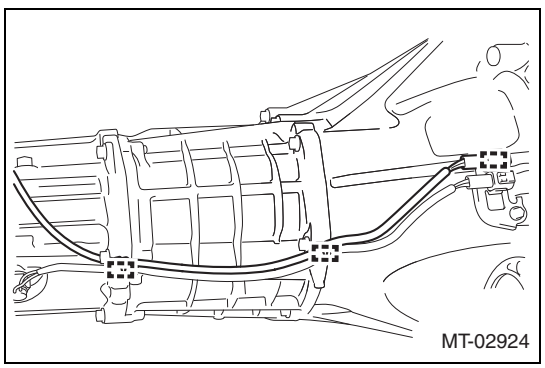

2. Removal of neutral position switch
   (1) Release the 3 clamps.

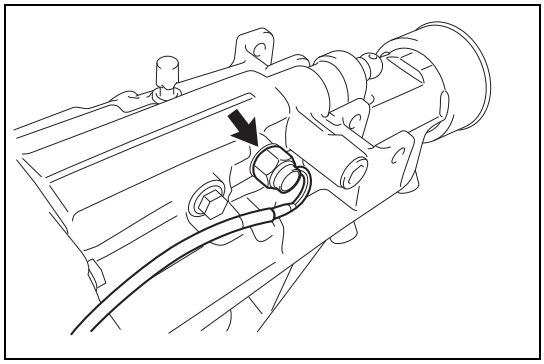

(2) Remove the neutral position switch and the gasket.

Installation

1. Installation of neutral position switch
   (1) Install a new gasket to the neutral position switch.
   (2) Install the neutral position switch.
   Standard value:T=32.3N·m {329.4kgf·cm} {23.8ft·lbf}
   CAUTION:
   When tightening by combining a torque wrench and union nut wrench to extend the whole length, the actual torque will be excessive if tightened until the reading of the torque wrench reaches the specified tightening torque. (Refer to IN - 6)
   (3) Engage all of the 3 clamps from the rear side with a slack of the harness positioned only at the forward end, and connect the back-up light switch ASSY wire and the neutral position switch wire.
2. Installation of manual transmission ASSY
   (Refer to MT - 24)

Unit inspection

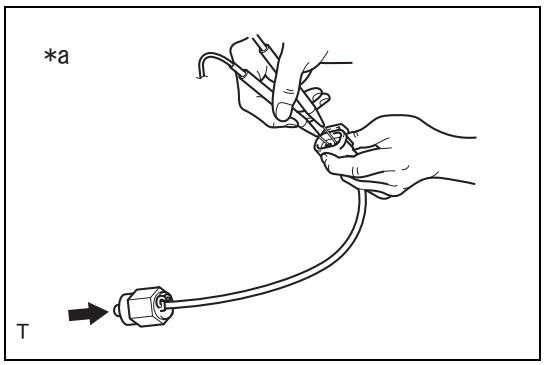

1. Check of neutral position switch
   (1) Measure the resistance between the terminals.
   Resistance

Inspection terminals	Inspection conditions	Standard value
1 - 2	When switch is pressed in	1 MΩ or more
	When switch is not pressed in	Less than 1 Ω

Captions in illustration

*a	Connector not connected (Neutral position switch)

If the resistance is not at the standard value, replace the neutral position switch.

MT

Back-up light switch

Exploded view

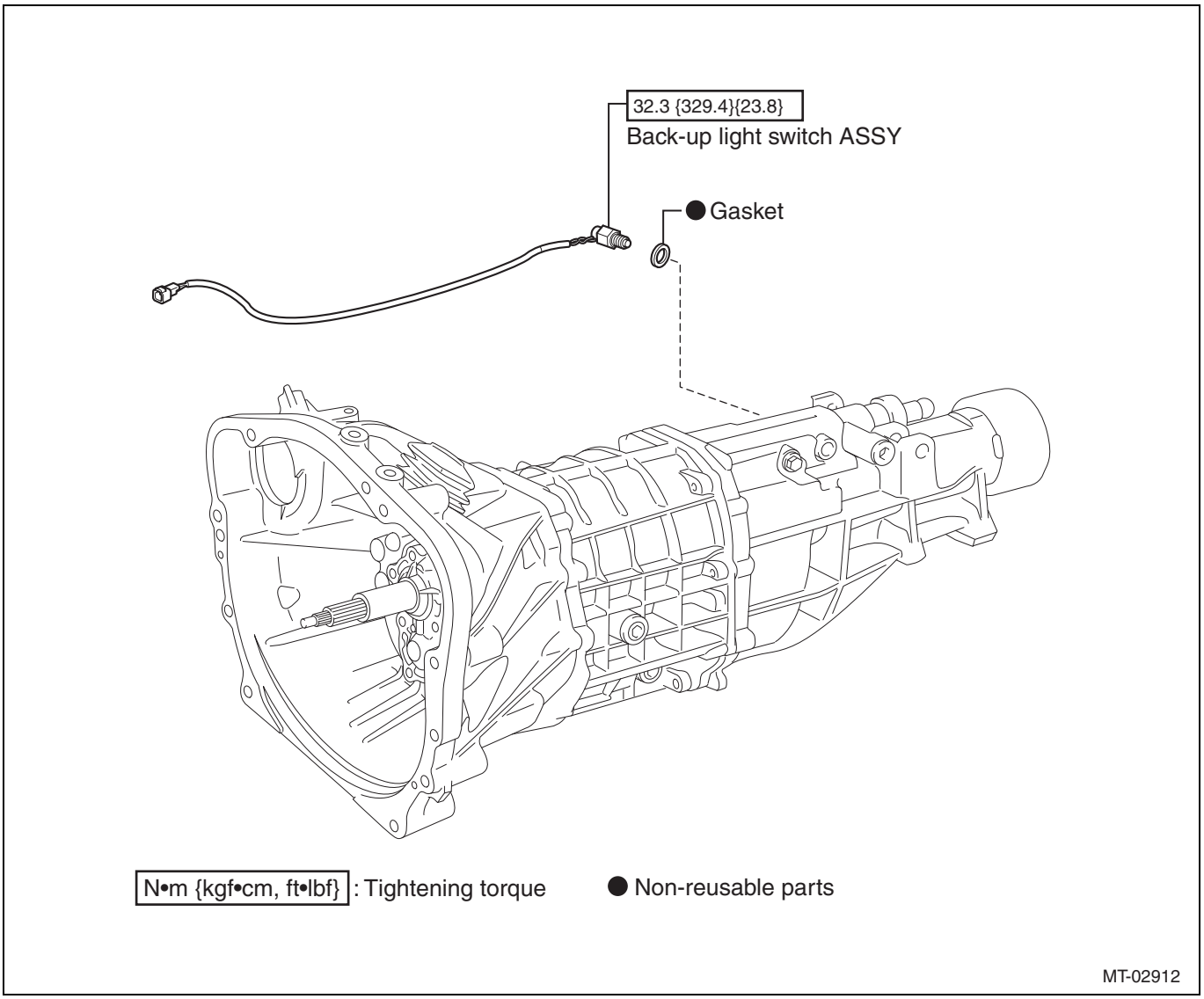

MT

Removal

1. Removal of manual transmission ASSY
   (Refer to MT - 18)

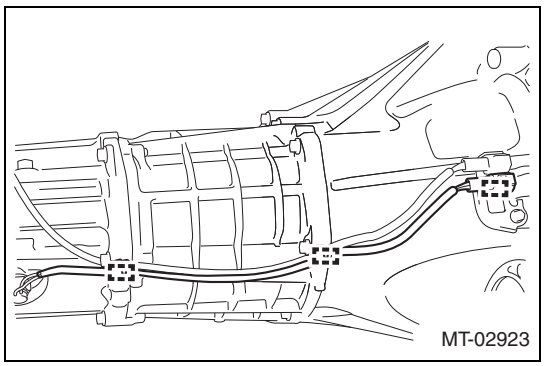

2. Removal of back-up light switch ASSY
   (1) Release the 3 clamps.

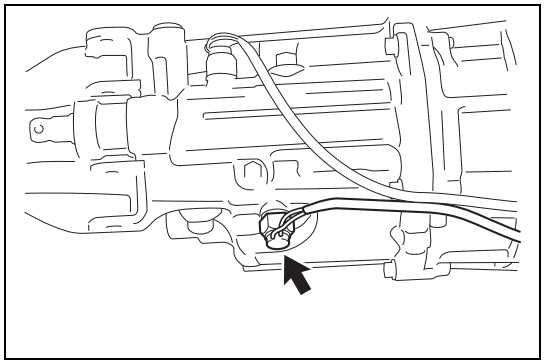

(2) Remove the back-up light switch ASSY and the gasket.

Installation

1. Installation of back-up light switch ASSY
   (1) Install a new gasket to the back-up light switch ASSY.
   (2) Install the back-up light switch ASSY.
   Standard value:T=32.3N·m {329.4kgf·cm} {23.8ft·lbf}
   CAUTION:
   When tightening by combining a torque wrench and union nut wrench to extend the whole length, the actual torque will be excessive if tightened until the reading of the torque wrench reaches the specified tightening torque. (Refer to IN - 6)
   (3) Engage all of the 3 clamps from the rear side with a slack of the harness positioned only at the forward end, and connect the back-up light switch ASSY wire and the neutral position switch wire.
2. Installation of manual transmission ASSY
   (Refer to MT - 24)

Unit inspection

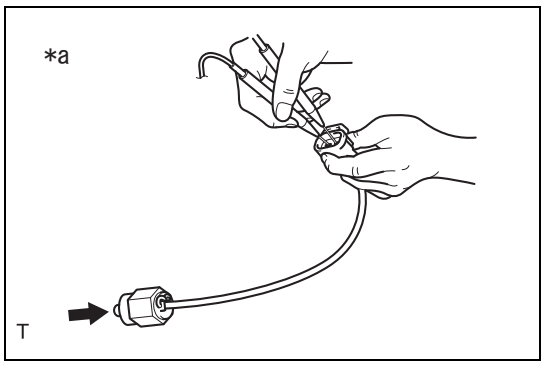

1. Check of back-up light switch ASSY
   (1) Measure the resistance between the terminals.
   Resistance

Inspection terminals	Inspection conditions	Standard value
1 - 2	When switch is pressed in	Less than 1 Ω
	When switch is not pressed in	1 MΩ or more

Captions in illustration

*a	Connector not connected (Back-up light switch ASSY)

If the resistance is not within the normal value, replace the back-up light switch ASSY.

MT

Floor shift, shift lever ASSY

Exploded view

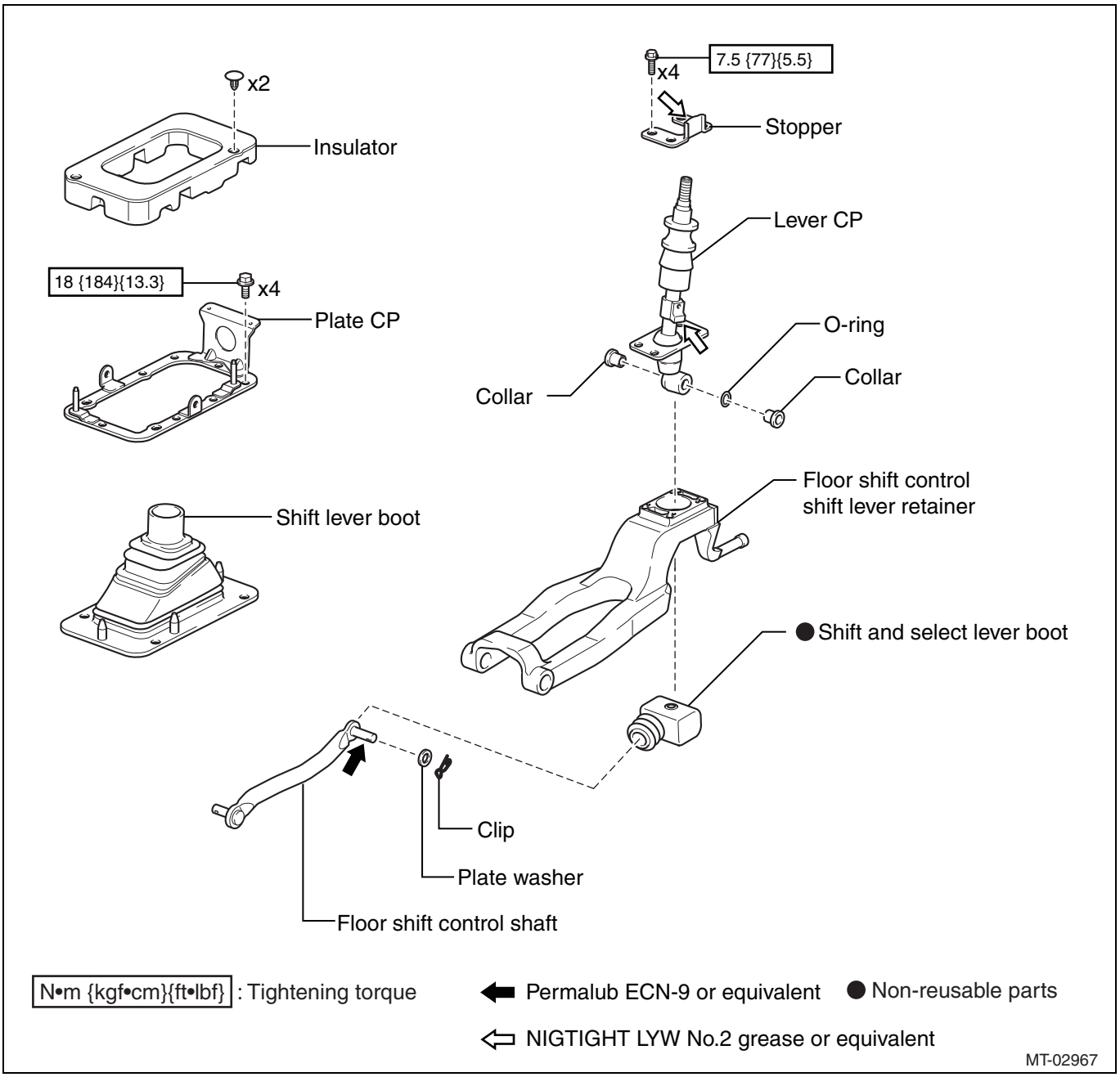

MT

Removal

1. Removal of console box ASSY (refer to IT - 33)

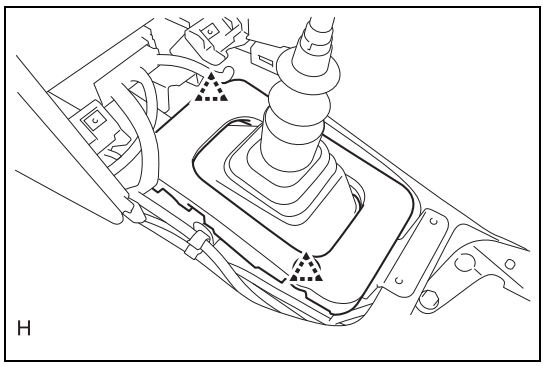

2. Removal of shift lever boot
   (1) Remove the 2 clips, then remove the insulator.

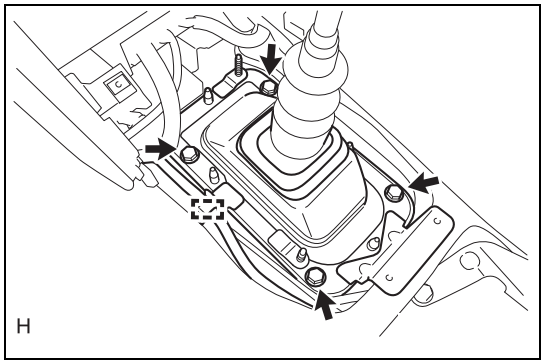

(2) Release the clamp and disconnect the wiring harness.
(3) Remove the 4 bolts, then remove the plate CP and the shift & select lever boot.

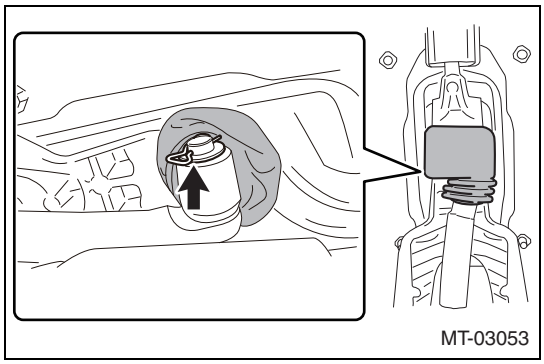

3. Disconnection of floor shift control shaft
   (1) Turn up the shift & select lever boot and remove the clip and the plate washer.
   (2) Disconnect the floor shift control shaft from the lever CP.
   (3) Remove the shift & select lever boot.

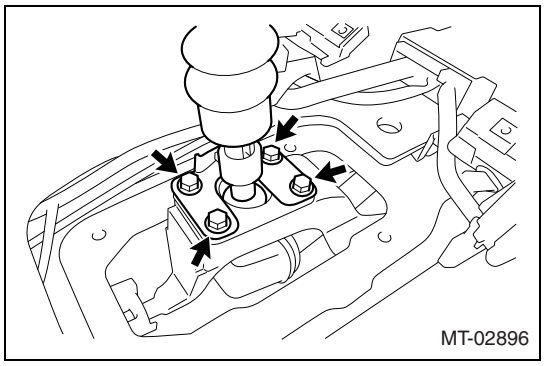

4. Removal of lever CP
   (1) Remove the 4 bolts, then remove the stopper.
   (2) Remove the lever CP from the floor shift control shift lever retainer.

MT

Installation

1. Installation of lever CP
   (1) Install the lever CP to the floor shift control shift lever retainer.
   (2) Install the stopper with the 4 bolts.
   Standard value:T=7.5N·m {77kgf·cm} {5.5ft·lbf}

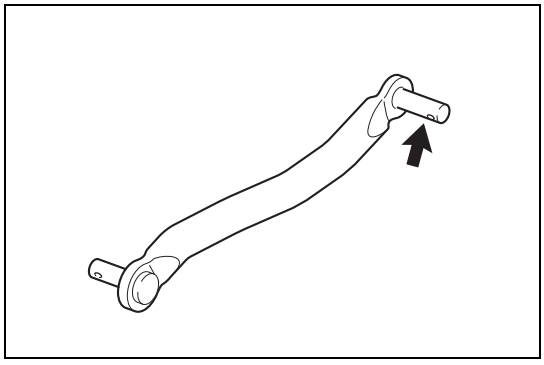

2. Connection of floor shift control shaft
   (1) Apply Permalub ECN-9 or equivalent to the tip of the floor shift control shaft.

Captions in illustration

➡	Permalub ECN-9 or equivalent

   (2) Temporarily install a new shift & select lever boot.
   (3) Connect the tip of the floor shift control shaft to the lever CP and install the plate washer and the clip, then install the shift & select lever boot.

3. Reverse check adjustment (refer to MT - 14)

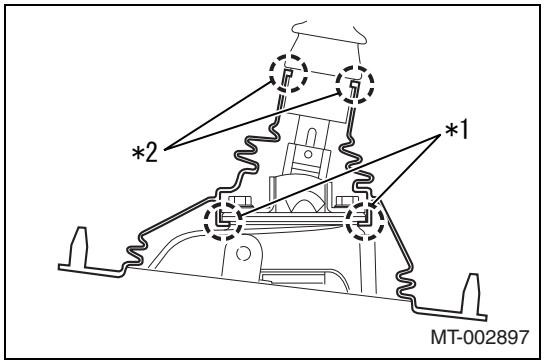

4. Installation of shift lever boot
   (1) Install the plate CP and the shift lever boot with the 4 bolts.
   Standard value:T=7.5N·m {77kgf·cm} {5.5ft·lbf}

Captions in illustration

*1	Bottom of stopper
*2	Groove on bottom of slider

CAUTION:
Cover the lever CP with the shift lever boot, and install the inner sealing portion to the bottom of the stopper and the upper sealing portion to the groove on the bottom of the slider.

   (2) Connect the harness.
   (3) Install the insulator with the 2 clips.

5. Installation of console box (refer to IT - 38)

Adjustment

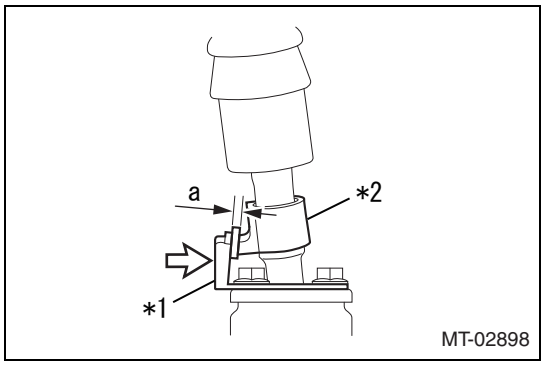

1. Reverse check adjustment
   (1) Loosen the 4 flange bolts on the stopper.
   (2) Shift the lever CP to the 2nd.
   (3) Insert a shim that is 1.0 mm {0.0394 in} in thickness between the detent and the stopper, and push the stopper to the detent.

Captions in illustration

*1	Stopper
*2	Detent
⇨	Push to

Standard value

Part	Dimension
a	1.0mm {0.0394in}

   (4) Tighten the 4 flange bolts on the stopper.
   Standard value:T=7.5N·m {77kgf·cm} {5.5ft·lbf}
   (5) Check that shift operation of 1st-2nd can be performed.
   (6) If shift operation of 1st-2nd cannot be performed in the above check, perform the steps (1) to (4) with a shim that is 0.2 mm {0.0079 in} thinner.
   (7) Check that shift operation of 1st-2nd can be performed.

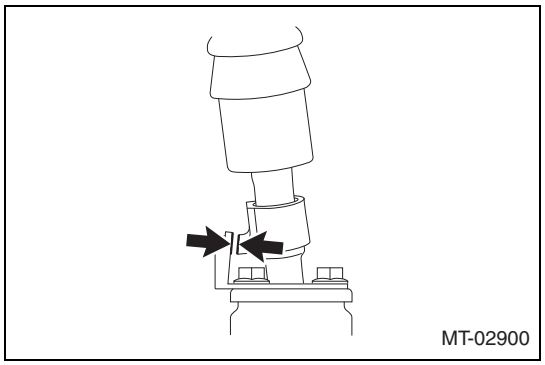

   (8) After the completion of reverse check adjustment, apply NIGTIGHT LYW No.2 or equivalent to the detent and the stopper.

Captions in illustration

➡	NIGTIGHT LYW No.2 or equivalent

MT

Manual transmission ASSY

Exploded view

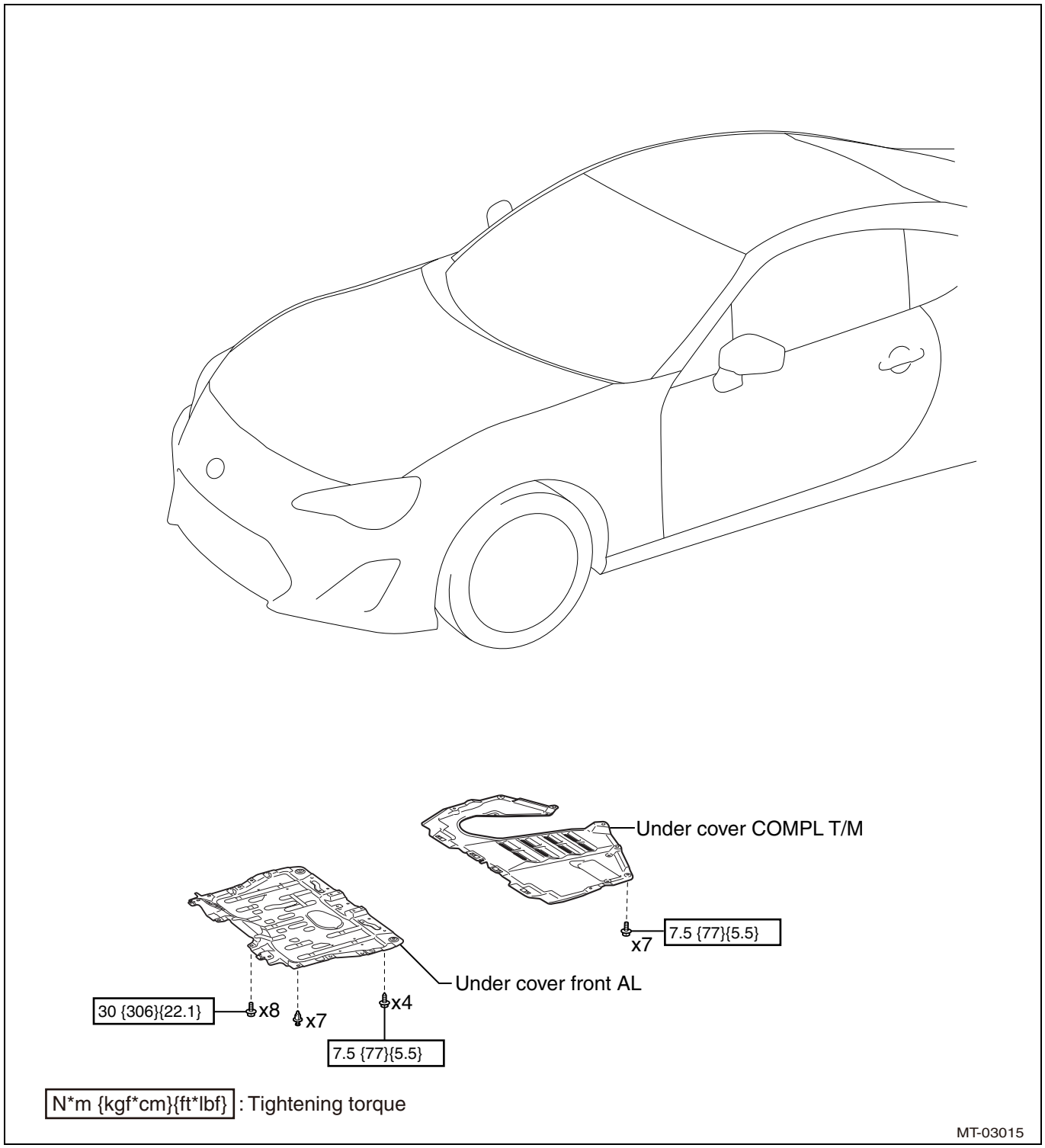

MT

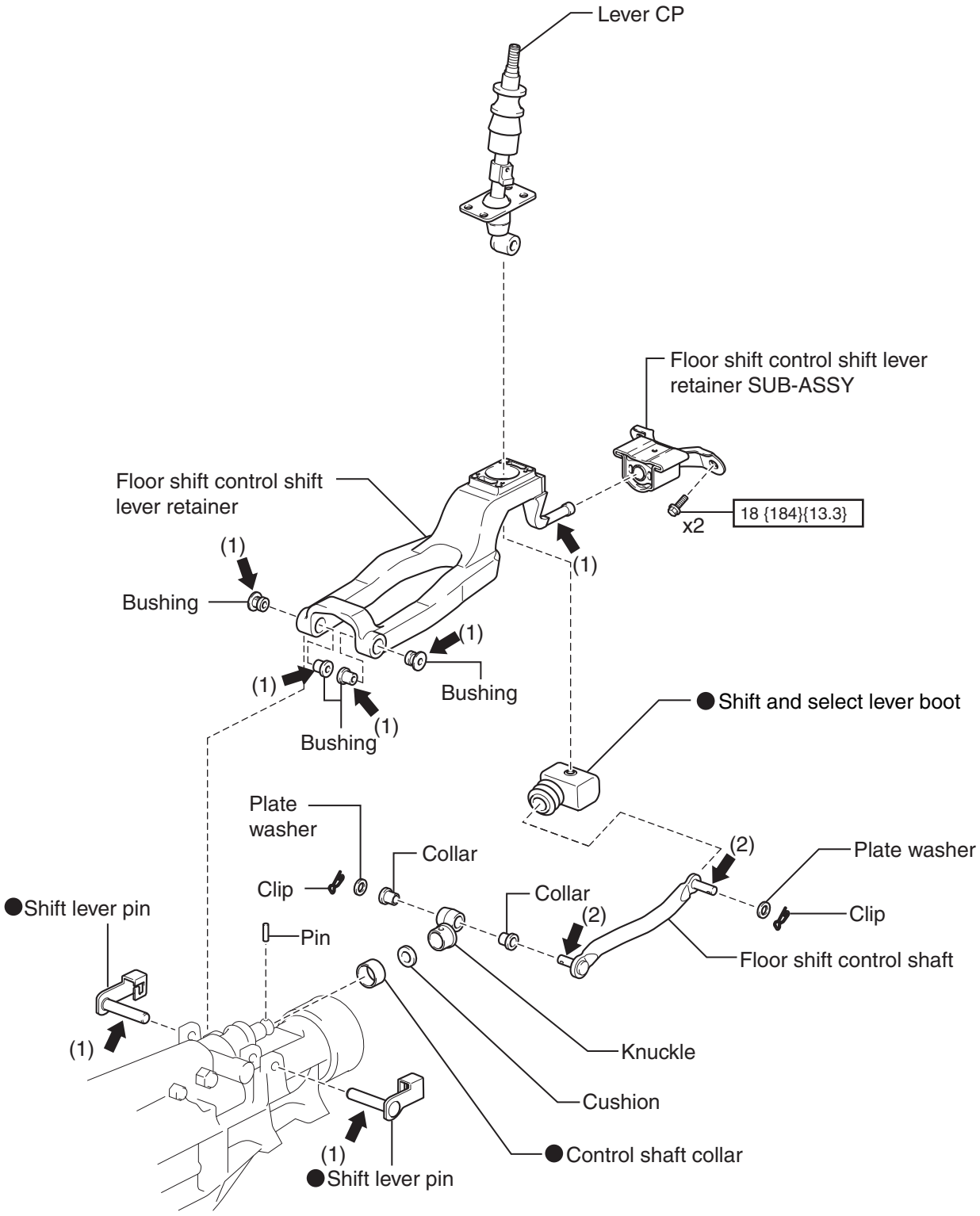

N*m {kgf*cm}{ft*lbf} : Tightening torque

(1) NIGTIGHT LYW No.2 or equivalent

(2) Permalub ECN-9 or equivalent

● Non-reusable parts

MT-02968

MT

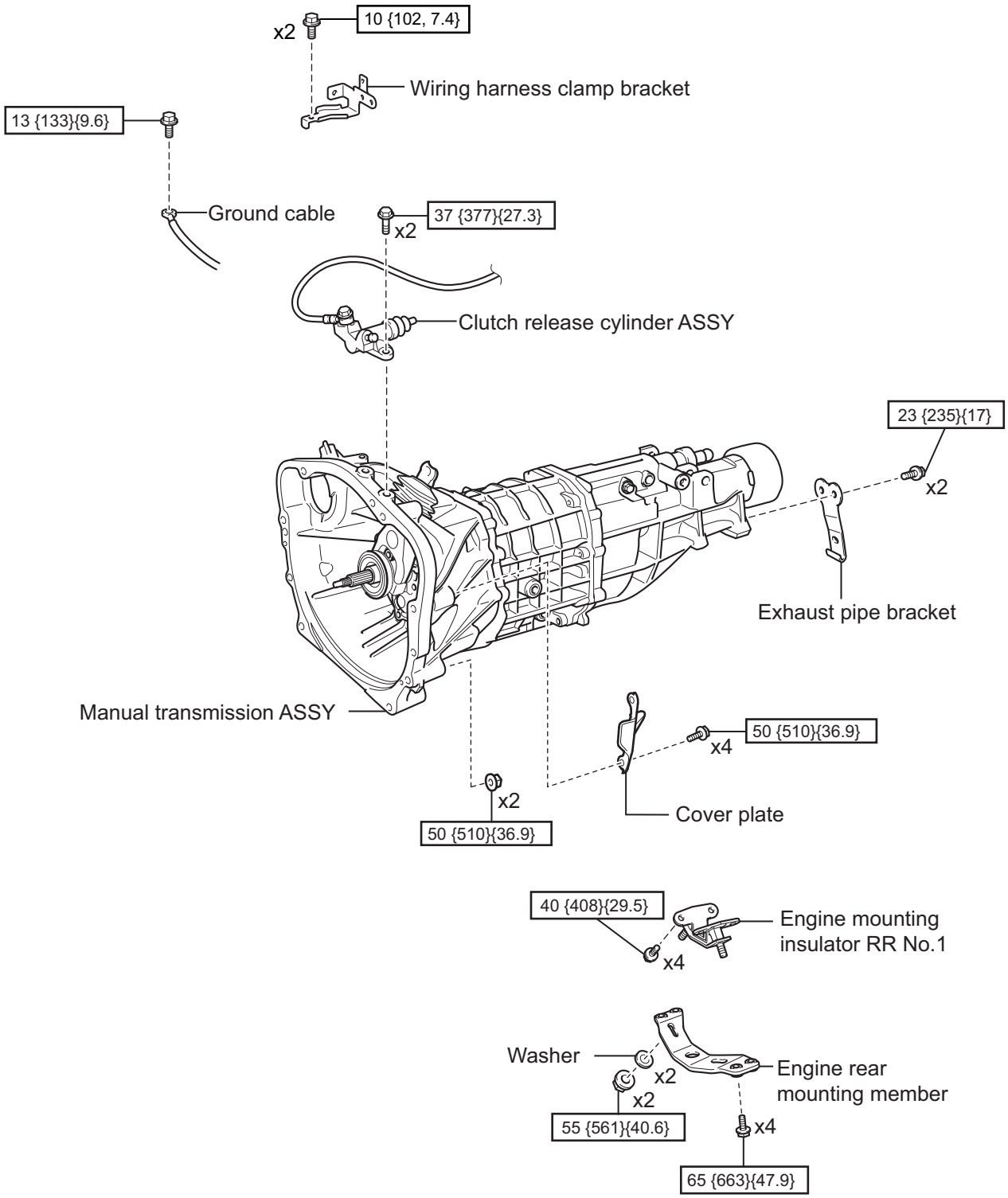

N*m {kgf*cm,ft*lbf} : Tightening torque

MT-10079

MT

Removal

CAUTION:

Be sure to remove and clean the clutch release fork SUB-ASSY even when carrying out work that does not require the clutch release fork SUB-ASSY to be removed. (Refer to CL - 23)

1. Disconnection of the battery ground terminal (Refer to BH - 31)
2. Removal of under cover front AL (refer to IE - 39)
3. Removal of under cover COMPL T/M (refer to IE - 40)
4. Drain of manual transmission oil (refer to MT - 4)
5. Removal of exhaust manifold
   (Refer to IE - 35)
6. Removal of propeller shaft with center bearing ASSY
   (Refer to DP - 14)
7. Removal of stabilizer bar FR
   (Refer to FP - 21)
8. Removal of starter ASSY
   (Refer to ST - 21)
9. Disconnection of wiring harness
   NOTE:
   Secure the disconnected harnesses using tape, etc. to keep them out of the way.

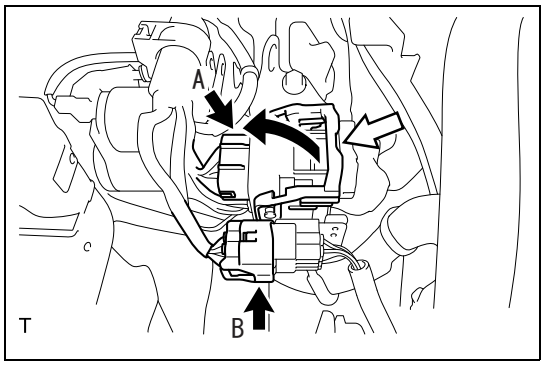

(1) Release the lock of the connector A to move the lock lever, and disconnect the connector.

Captions in illustration

⇨	Lock unit

(2) Disconnect the connector B.

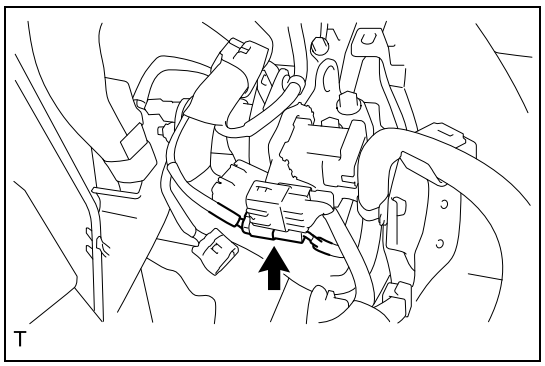

(3) Disconnect the connector.

MT

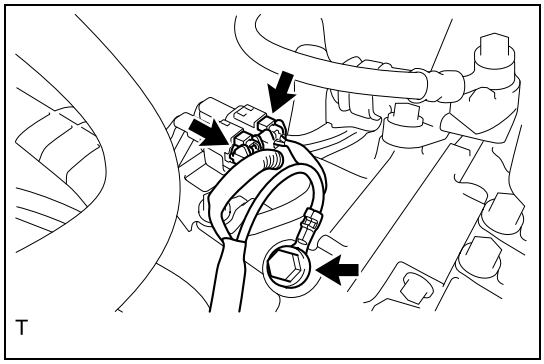

(4) Disconnect the 2 connectors.

(5) Remove the bolts, then disconnect the ground cable.

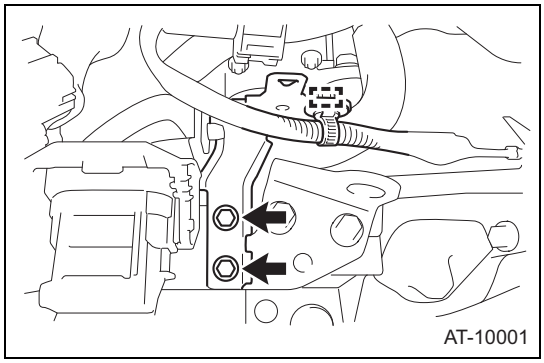

(6) Release the clamp and disconnect the wiring harness.

(7) Remove 2 bolts and disconnect the wiring harness clamp bracket.

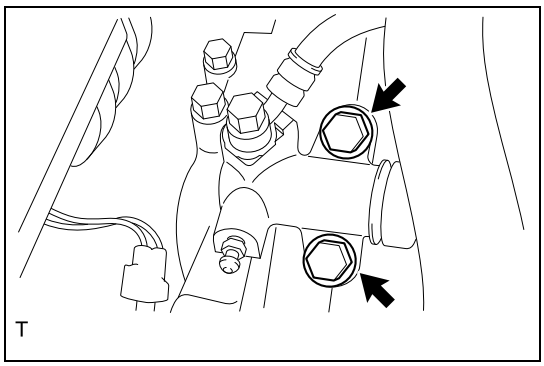

10. Disconnection of clutch release cylinder ASSY
    (1) Remove 2 bolts to disconnect the clutch release cylinder ASSY.
    NOTE:
    Hang the clutch release cylinder ASSY with rope, etc. not to apply excessive force to the clutch pipe.

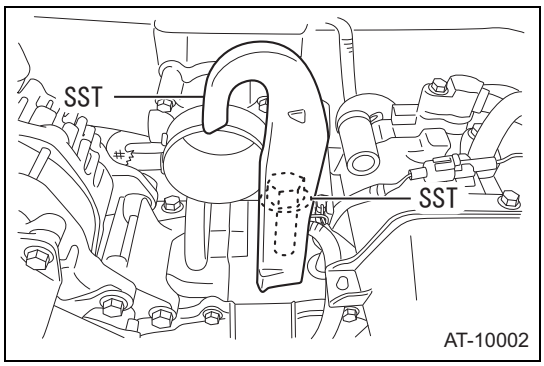

11. Install the SST to the engine unit.
    Standard value:T=43N·m {438kgf·cm} {31.7 ft-lb}
    SST 12281-38150 (Engine hanger No.1), 90119-14120 (Bolt)

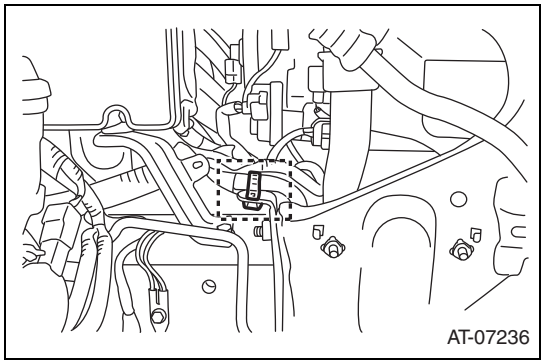
AT-07236

12. Remove the clip securing the bulkhead harness to the vehicle.
    - Left hand

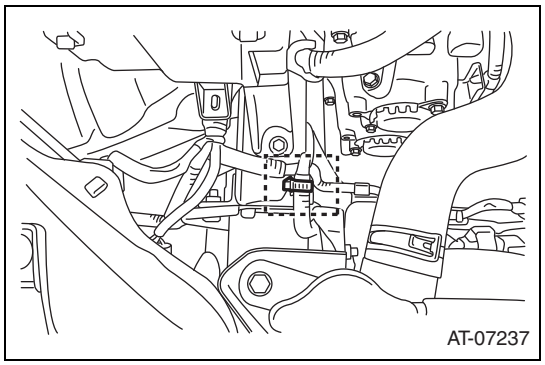
AT-07237

- Right hand

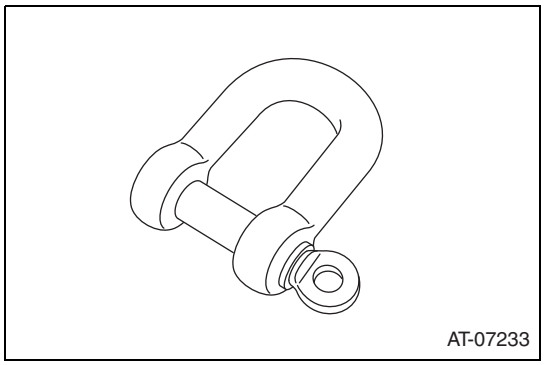
AT-07233

13. Set the SST to the vehicle to support the engine.
    SST 99099AJ000 (Engine hanger), 18679AA020 (Adjuster)
    CAUTION:
    - Keep the harness from being caught in when setting the SST on the vehicle.
    - Use a shackle with the load capacity of 250 kg {551 lb} or more.

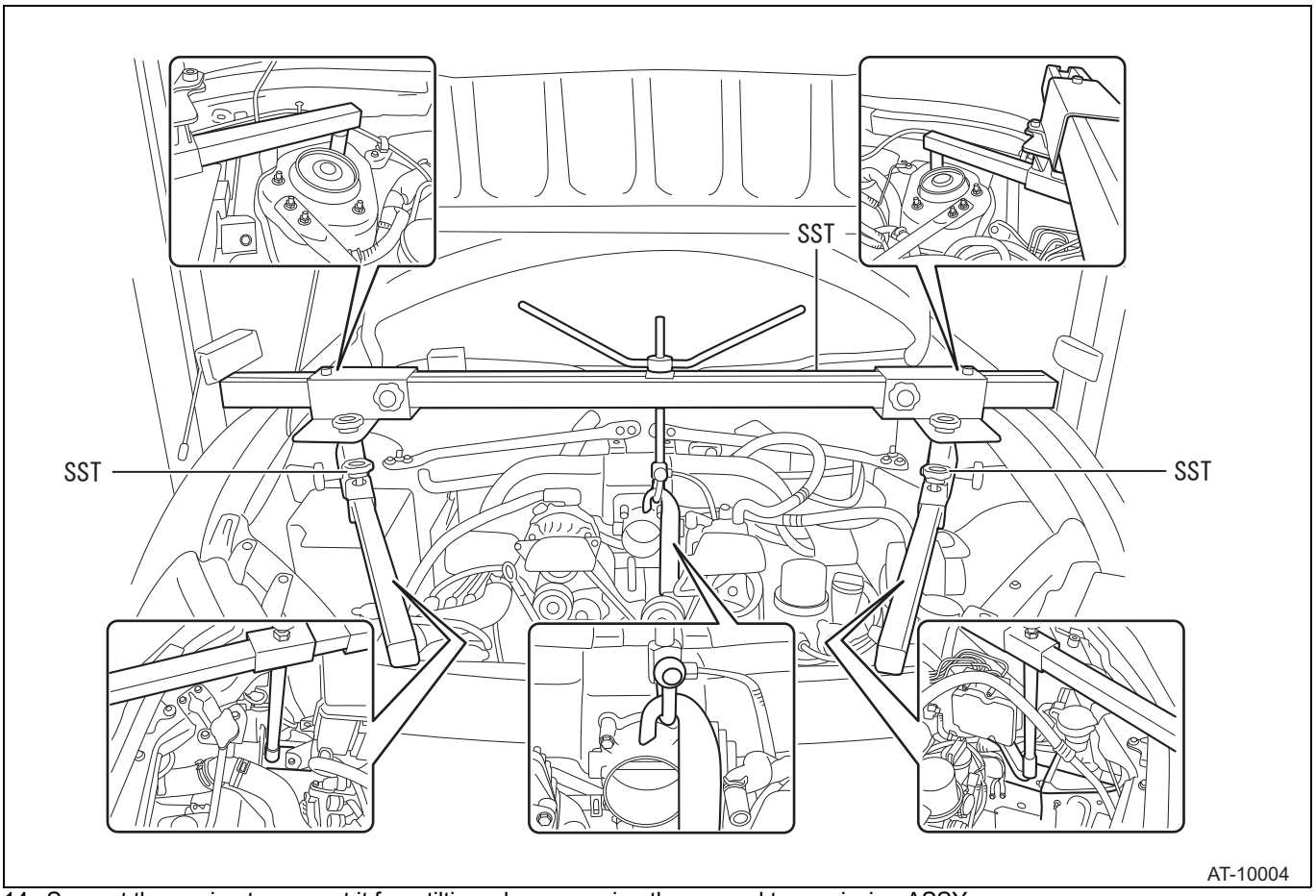

14. Support the engine to prevent it from tilting when removing the manual transmission ASSY.
    CAUTION:
    - To prevent damage to the SST threaded portion, turn the handle after applying grease or lubricants to the SST threaded portion.
    - To prevent damage caused by contact of parts, lift gradually while paying attention to the clearance of each part.

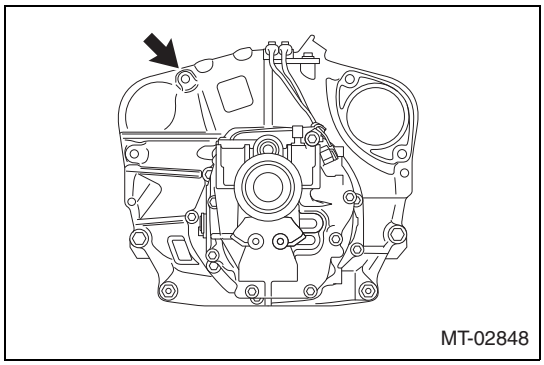

15. Removal of manual transmission ASSY (preparation)
    (1) Remove the bolt connecting the manual transmission ASSY.

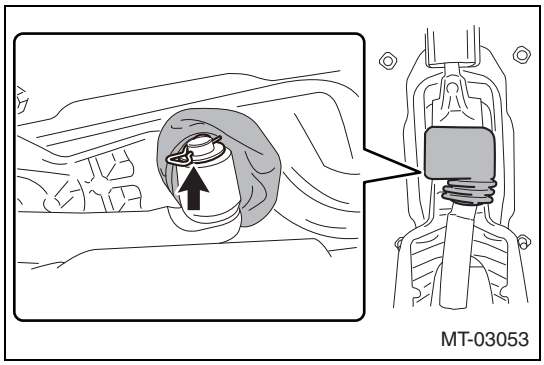

16. Disconnection of floor shift control shaft
    (1) Turn over the shift & select lever boot and remove the clip and the plate washer.
    (2) Disconnect the floor shift control shaft from the lever CP.
    (3) Remove the shift & select lever boot.

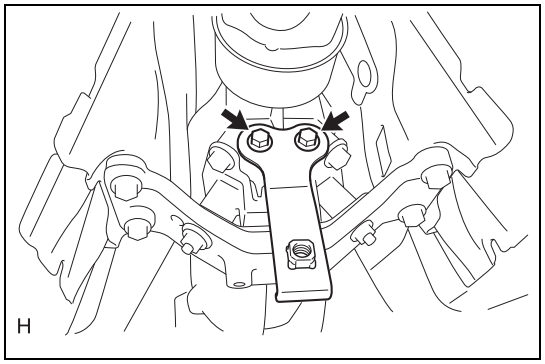

17. Removal of exhaust pipe support No.1
    (1) Remove 2 bolts to remove the exhaust pipe support No.1.

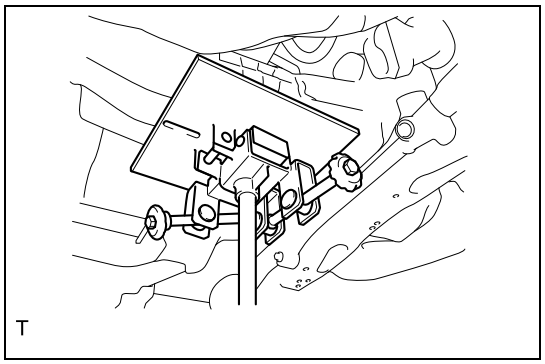

18. Support of manual transmission ASSY
    (1) Hold the manual transmission ASSY.
    CAUTION:
    Make sure that the manual transmission ASSY is placed at the center of the cradle of the high mission jack.

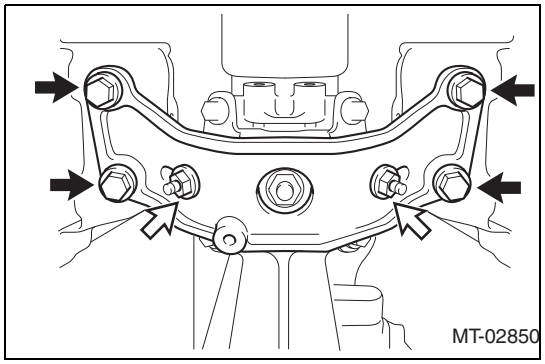

19. Removal of engine rear mounting member
    (1) Remove 4 bolts, 2 nuts, and 2 washers to remove the engine rear mounting member.

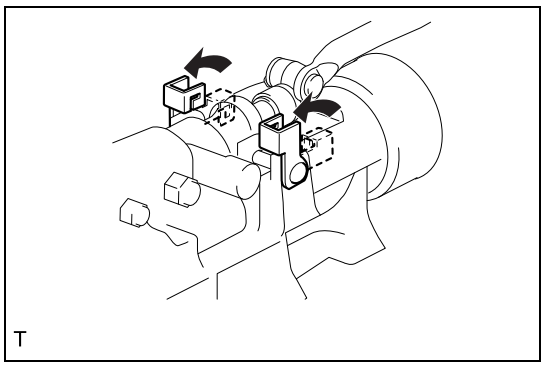

20. Removal of shift lever pin
    (1) Release the lock and pull out the 2 shift lever pins.

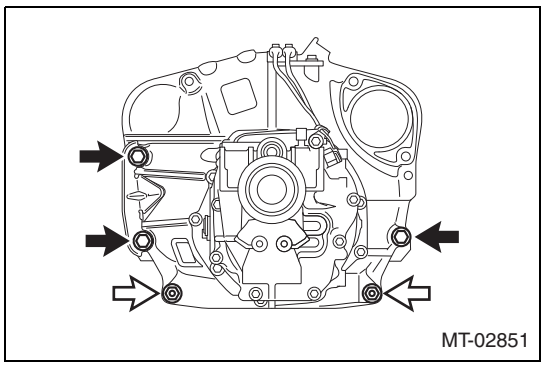

21. Removal of manual transmission ASSY
    (1) Remove 3 bolts and 2 nuts to remove the cover plate and manual transmission ASSY.

Captions in illustration

➡	Bolt
⇨	Nut

MT

CAUTION:
- Retract the high mission jack until the input shaft is pulled out from the clutch cover.
- Be careful not to damage the extension housing breather plug.
- Do not shake the manual transmission ASSY excessively to prevent damage to the input shaft.
- To prevent damage to the knock pin, do not pry apart the contact surface of the manual transmission ASSY and the engine ASSY excessively.

NOTE:
If it is difficult to remove the manual transmission ASSY, use a KTC mighty bar or equivalent to pry apart the joint between the manual transmission ASSY and engine ASSY and remove the manual transmission ASSY.

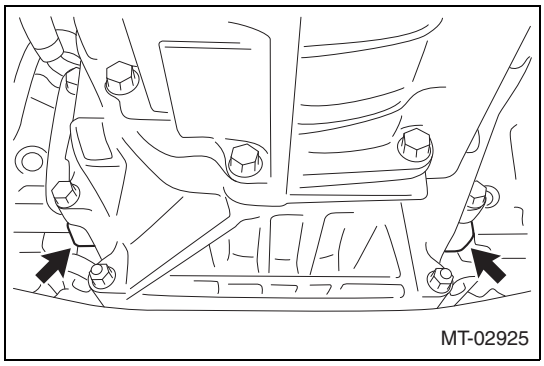
MT-02925

Captions in illustration

➡	Point to apply KTC mighty bar or equivalent

(2) Remove 4 bolts to remove the engine mounting insulator RR No.1.

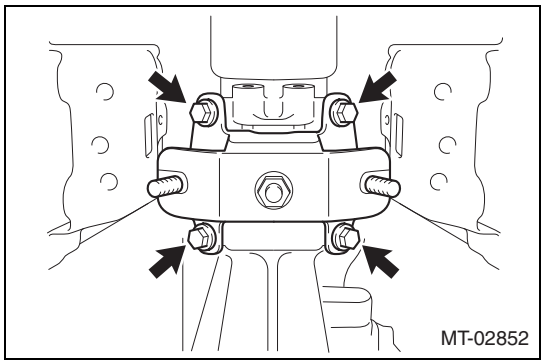
MT-02852

22. Removal of floor shift control shaft and knuckle
    (1) Release the crimp on the control shaft collar.
    (2) After sliding the control shaft collar, press down the pin with the L-shaped tool and push it up, then pull it out with pliers while applying a cloth to prevent damage to the pin.
    (3) Remove the floor shift control shaft and the knuckle as a unit from the manual transmission ASSY.

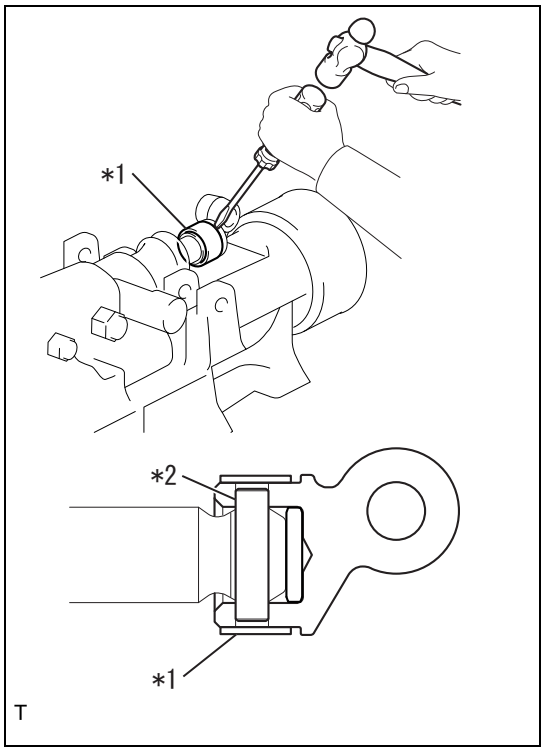

Captions in illustration

*1	Control shaft collar
*2	Pin

(4) Remove the cushion from the knuckle.

23. When removing the floor shift control shift lever retainer SUB-ASSY and the floor shift control shift lever retainer
    (1) Remove the lever CP. (Refer to MT - 13)

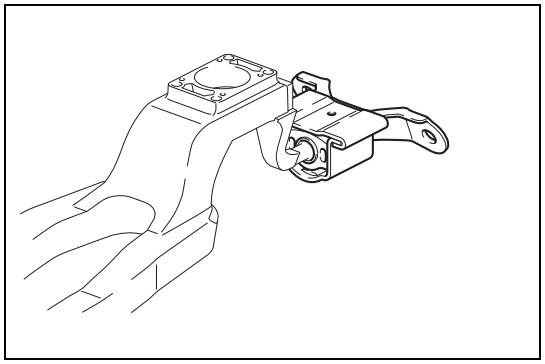

(2) Remove the floor shift control shift lever retainer SUB-ASSY from the floor shift control shift lever retainer.

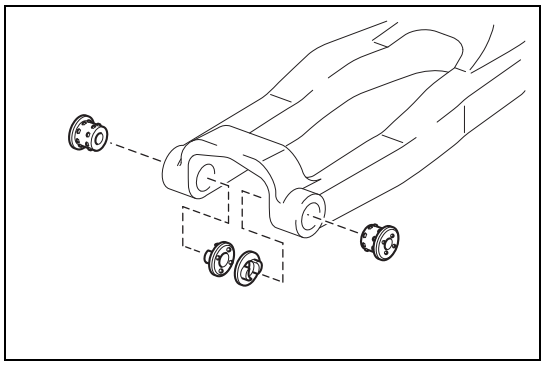

(3) Remove the 2 outer bushings and 2 inner bushings from the control shift lever retainer.

24. When removing the floor shift control shaft or knuckle
    (1) Remove the clip and the plate washer, and remove the floor shift control shaft.

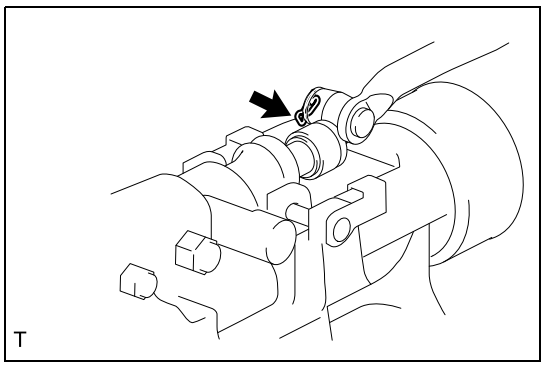

(2) Remove the 2 collars from the knuckle.

Installation

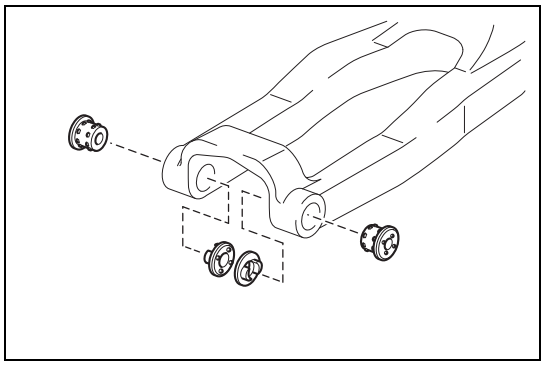

1. When installing the control shift lever retainer SUB-ASSY and the floor shift control shift lever retainer
    (1) Apply NIGTIGHT LYW No.2 or equivalent to the inner bushing and outer bushing.
    (2) Install 2 inner bushings and 2 outer bushings to the control shift lever retainer.

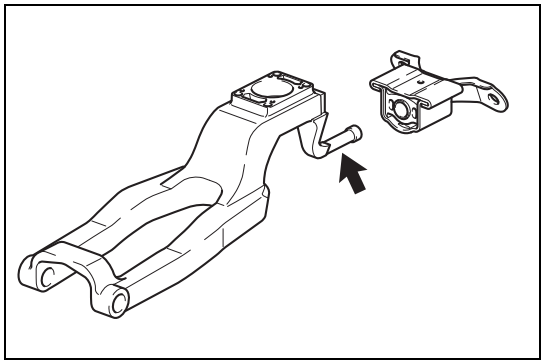

(3) Apply NIGTIGHT LYW No.2 or equivalent to the tip of the floor shift control shift lever retainer.

Captions in illustration

➡	NIGTIGHT LYW No.2 or equivalent

(4) Install the floor shift control shift lever retainer SUB-ASSY to the control shift lever retainer.
(5) Install the lever CP. (Refer to MT - 13)

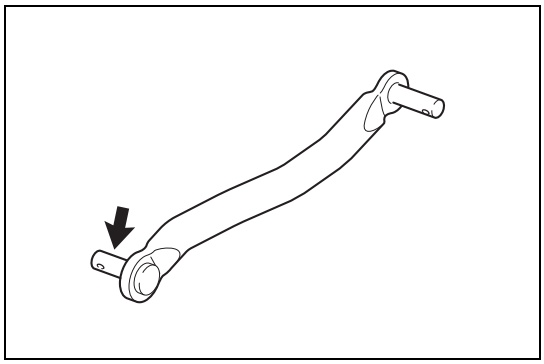

2. When installing floor shift control shaft or knuckle
(1) Apply Permalub ECN-9 or equivalent to the tip of the floor shift control shaft.

Captions in illustration

➡	Permalub ECN-9 or equivalent

(2) Install the 2 collars to the knuckle.
(3) Connect the tip of the floor shift control shaft to the knuckle, and install the plate washer and the clip.

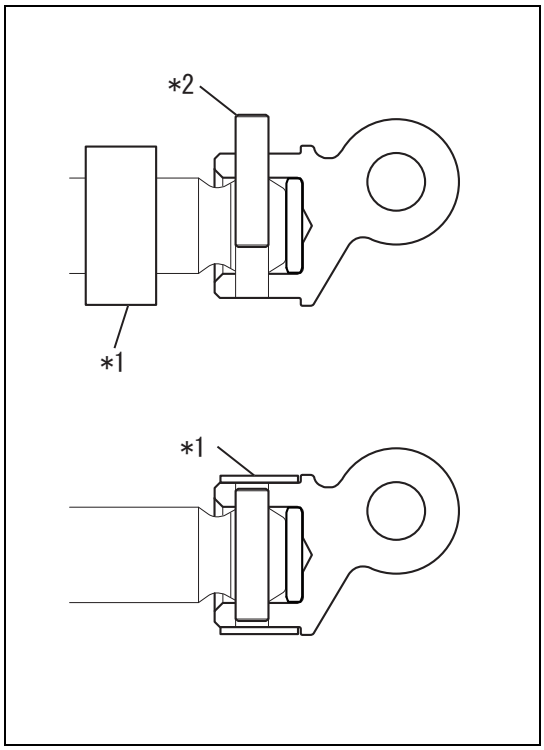

3. Installation of floor shift control shaft shift and knuckle
(1) Install a new control shaft collar to the shift shaft.

Captions in illustration

*1	Control shaft collar
*2	Pin

(2) Install the cushion to the knuckle.
(3) Install the floor shift control shaft and knuckle as a unit to the shift shaft.
(4) Drive in the pin.
(5) Slide the control shaft collar until it reaches to the knuckle stopper, and crimp the control shaft collar.

MT

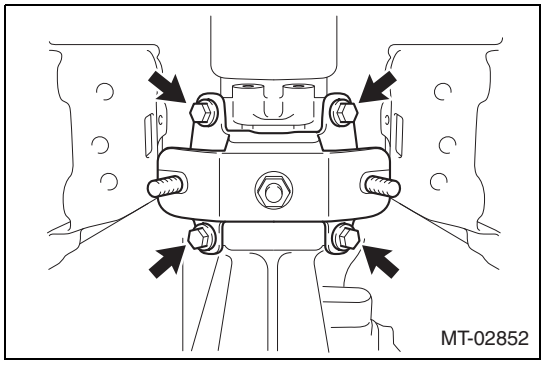

(6) Install the engine mounting insulator RR No.1 with 4 bolts.
Standard value:T=40N·m {408kgf·cm} {29.5ft·lbf}

4. Installation of manual transmission ASSY
   (1) Make sure that the knock pins are attached to 2 locations on the engine side.

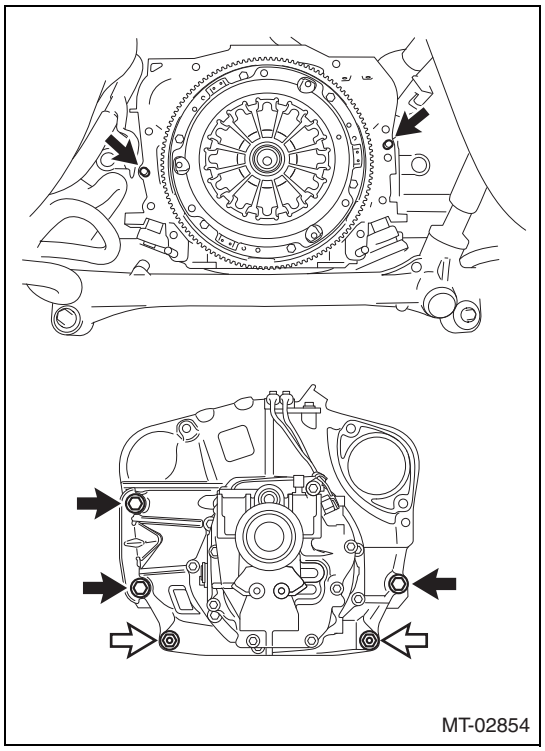

   (2) Keep the engine and the manual transmission ASSY horizontal, then align the knock pins and the knock pin holes, set the cover plate, and tighten the 3 bolts and 2 nuts shown in the figure.
   Standard value:T=50N·m {510kgf·cm} {36.9ft·lbf}

Captions in illustration

➡	Bolt
⇨	Nut

CAUTION:
- Do not shake the transmission ASSY excessively to prevent damage to the input shaft.
- Before installing the transmission ASSY, check that there are 2 knock pins on the engine transmission installing surface.
- Do not shake the transmission ASSY excessively to prevent damage to the knock pins.
- Be careful not to damage the extension housing breather plug.
- Be sure to install the transmission ASSY with the input shaft engaged to the clutch disc spline. Otherwise the clutch disc may be damaged and cause noise.

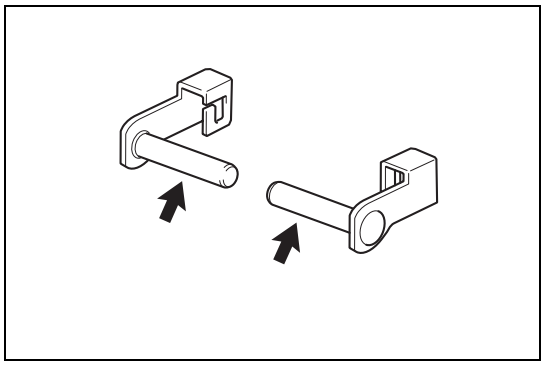

   (3) Apply NIGTIGHT LYW No.2 or equivalent to the tip of new shift lever pins.

Captions in illustration

➡	NIGTIGHT LYW No.2 or equivalent

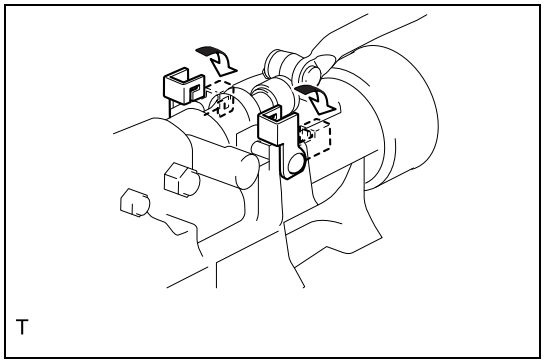

   (4) Install the control shift lever retainer to the manual transmission ASSY with 2 shift lever pins.

   (5) Lock the 2 shift lever pins.

MT

5. Installation of engine rear mounting member

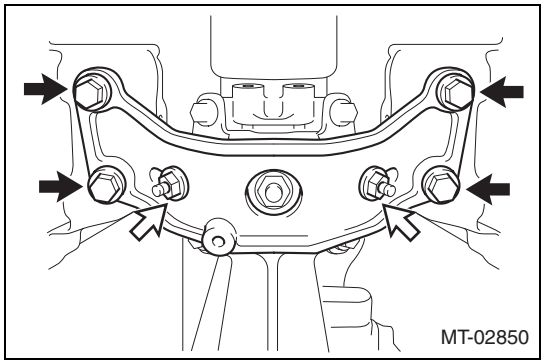

(1) Install the engine rear mounting member with 4 bolts, 2 nuts, and 2 washers.
Standard value:T=55N·m {561kgf·cm} {40.6ft·lbf} (nut)
T=65N·m {663kgf·cm} {47.9ft·lbf} (bolt)

6. Installation of exhaust pipe support No.1

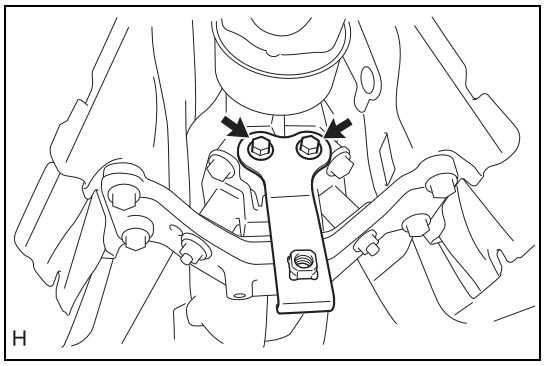

(1) Install the exhaust pipe support No.1 with 2 bolts.
Standard value:T=23N·m {235kgf·cm} {17.0ft·lbf}

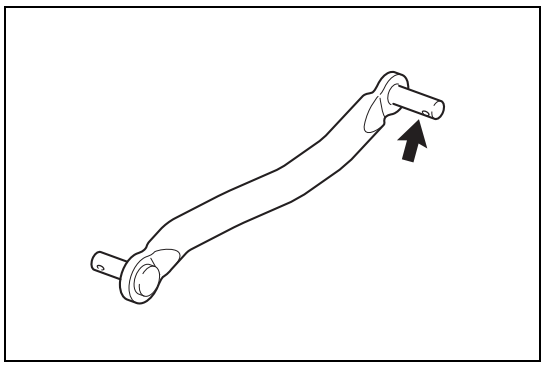

7. Installation of floor shift control shaft
(1) Apply Permalub ECN-9 or equivalent to the tip of the floor shift control shaft.

Captions in illustration

➡	Permalub ECN-9 or equivalent

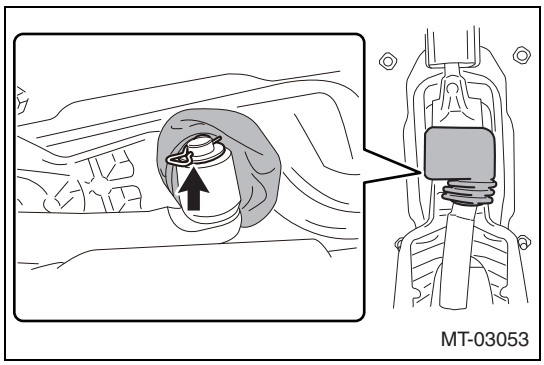

(2) Connect the tip of the floor shift control shaft to the lever CP and install the plate washer and the clip, then install the shift & select boot.

MT

8. Installation of manual transmission ASSY

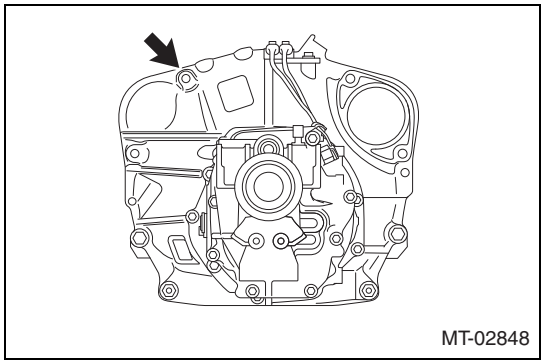

(1) Tighten the connecting bolt on the manual transmission ASSY.
Standard value:T=50N·m {510kgf·cm} {36.9ft·lbf}

9. Remove the SST from the vehicle.
10. Remove the SST from the engine unit.
11. Connection of clutch release cylinder ASSY
    (1) Connect the clutch release cylinder ASSY with the 2 bolts.
    Standard value:T=37N·m {377kgf·cm} {27.3ft·lbf}

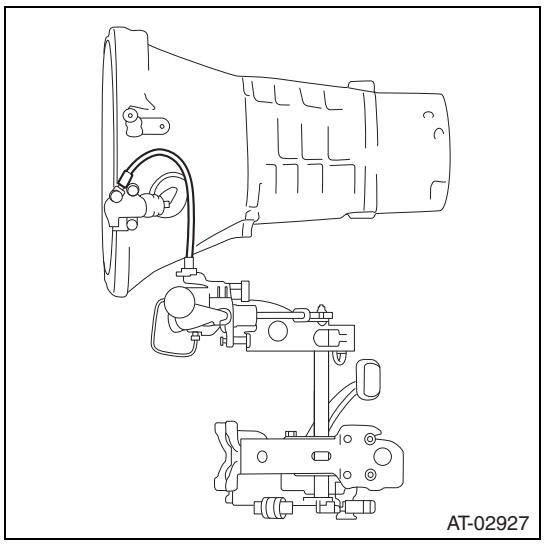

CAUTION:
When restoring the clutch release cylinder ASSY, check that the clutch hose is deflected in the same direction as shown in the figure.

MT

12. Connection of wiring harness

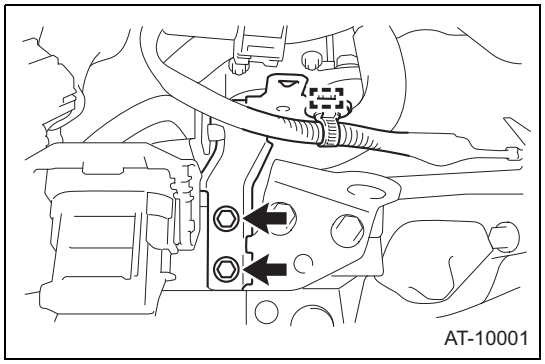

(1) Install the wiring harness clamp bracket with 2 bolts.
Standard value:T=10N·m {102kgf·cm} {7.4ft·lbf}

(2) Engage the clamp to connect the wiring harness.

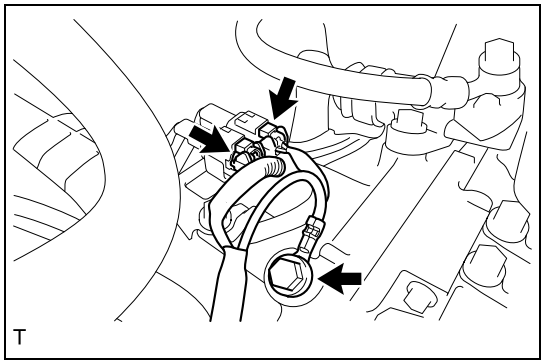

(3) Connect the ground cable with the bolt.
Standard value:T=13N·m {133kgf·cm} {9.6ft·lbf}

(4) Connect the 2 connectors.

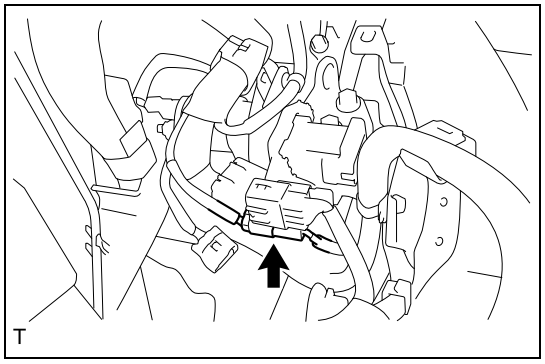

(5) Connect the connector.

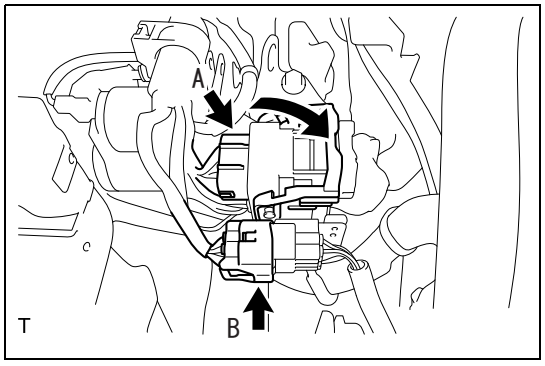

(6) Connect the 2 connectors.
NOTE:
For connector A, push down the lever until a sound indicating the claw is hooked is heard.

13. Installation of starter ASSY
(Refer to ST - 41)
14. Installation of stabilizer bar FR
(Refer to FP - 23)
15. Installation of propeller shaft with center bearing ASSY
(Refer to DP - 16)
16. Installation of exhaust manifold
(Refer to IE - 36)
17. Fill of manual transmission oil (refer to MT - 4)
18. Check of manual transmission oil (refer to MT - 4)
19. Check of manual transmission oil leakage
20. Installation of under cover COMPL T/M (refer to IE - 46)
21. Installation of under cover front AL (refer to IE - 46)
22. Connection of the battery ground terminal
Standard value:T=6.0N·m {61kgf·cm} {4.4 ft·lbf}

Transmission unit ASSY

Exploded view

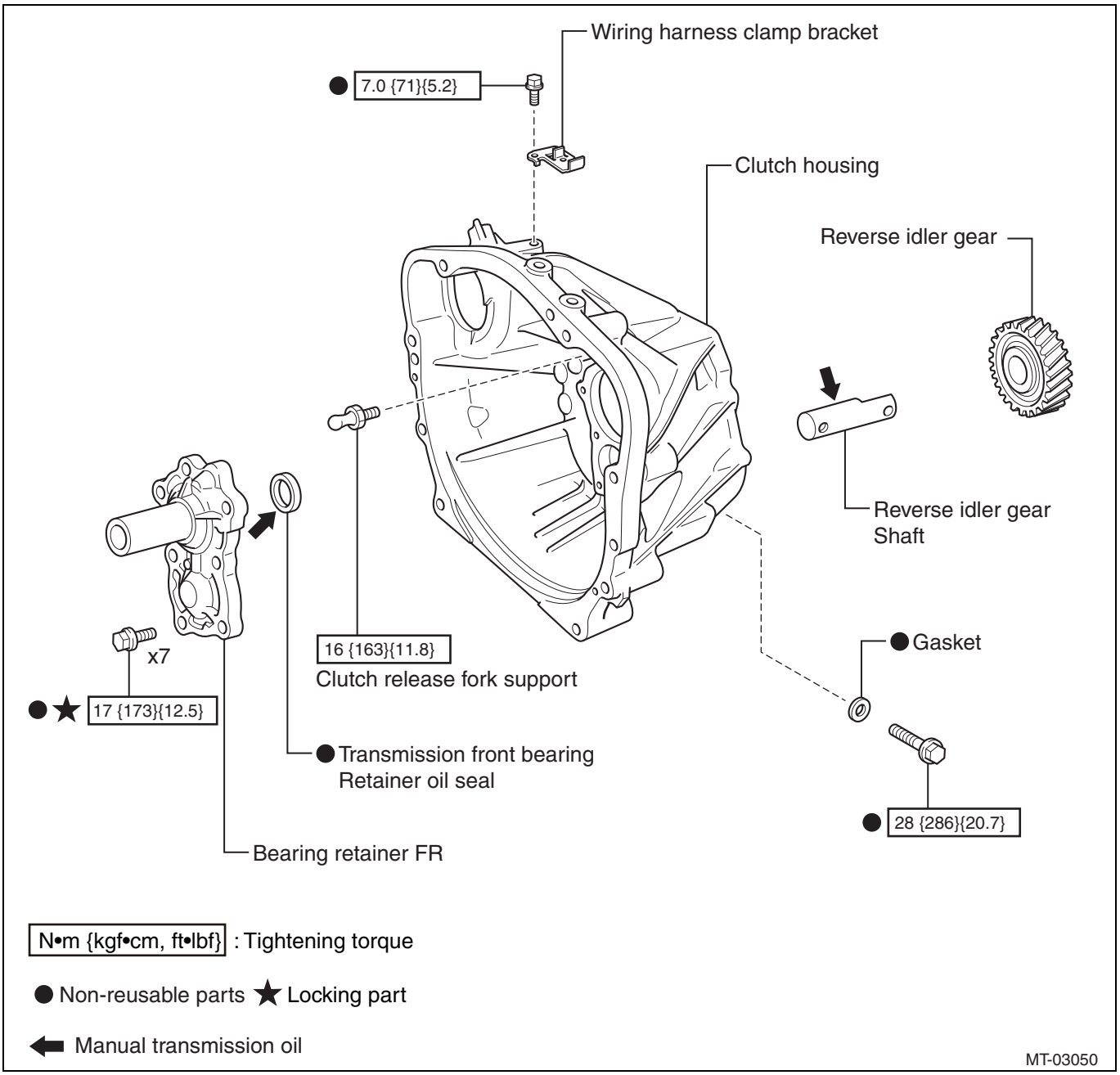

NOTE:

Be sure to use the recommended product or the substitute product for manual transmission oil. (Refer to MT - 4)

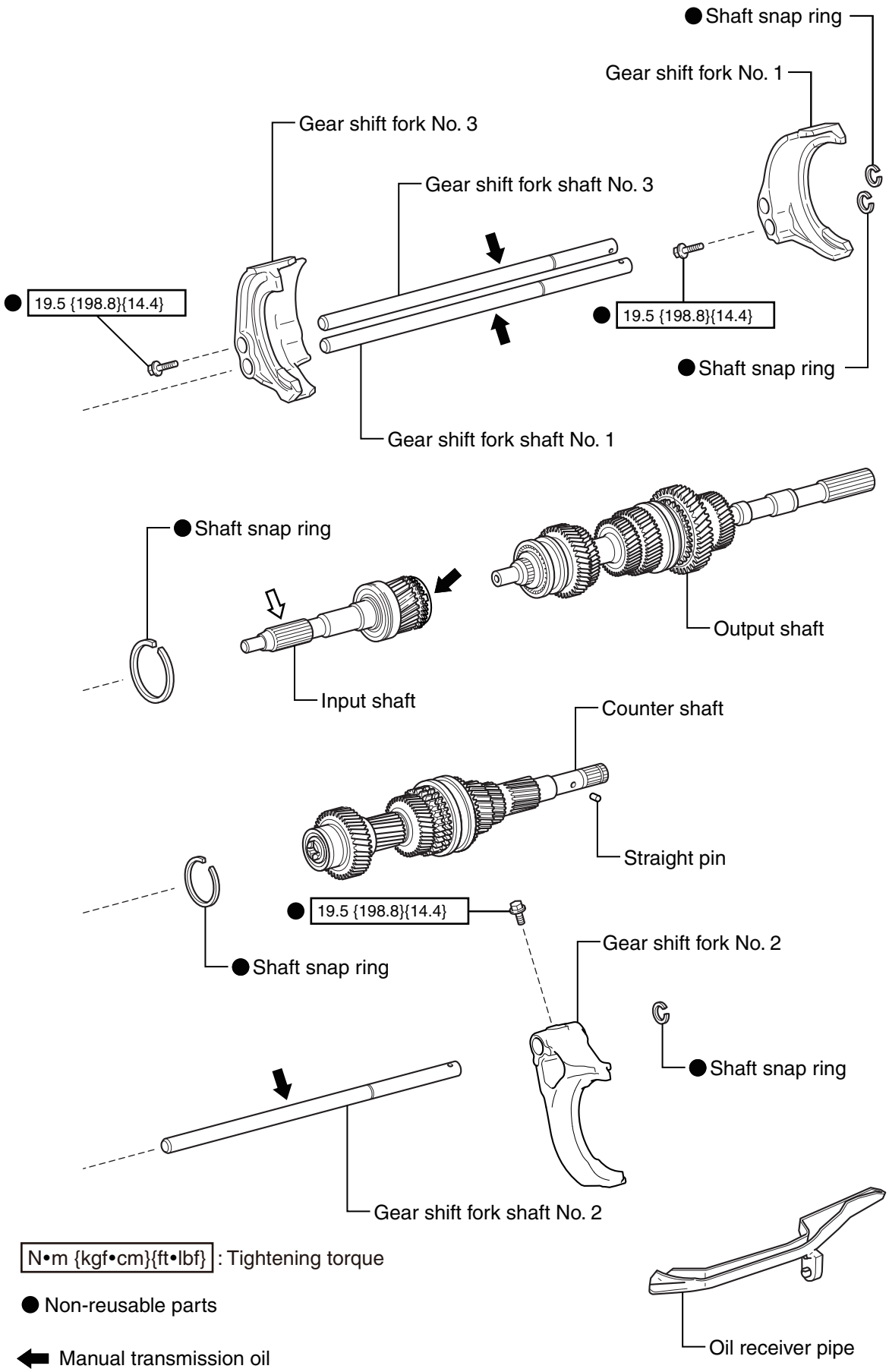

N•m {kgf•cm}{ft•lbf} : Tightening torque

● Non-reusable parts

⬅ Manual transmission oil

⇦ NICHIMOLY N-130 or equivalent

MT-03005

MT

NOTE:
Be sure to use the recommended product or the substitute product for manual transmission oil. (Refer to MT - 4)

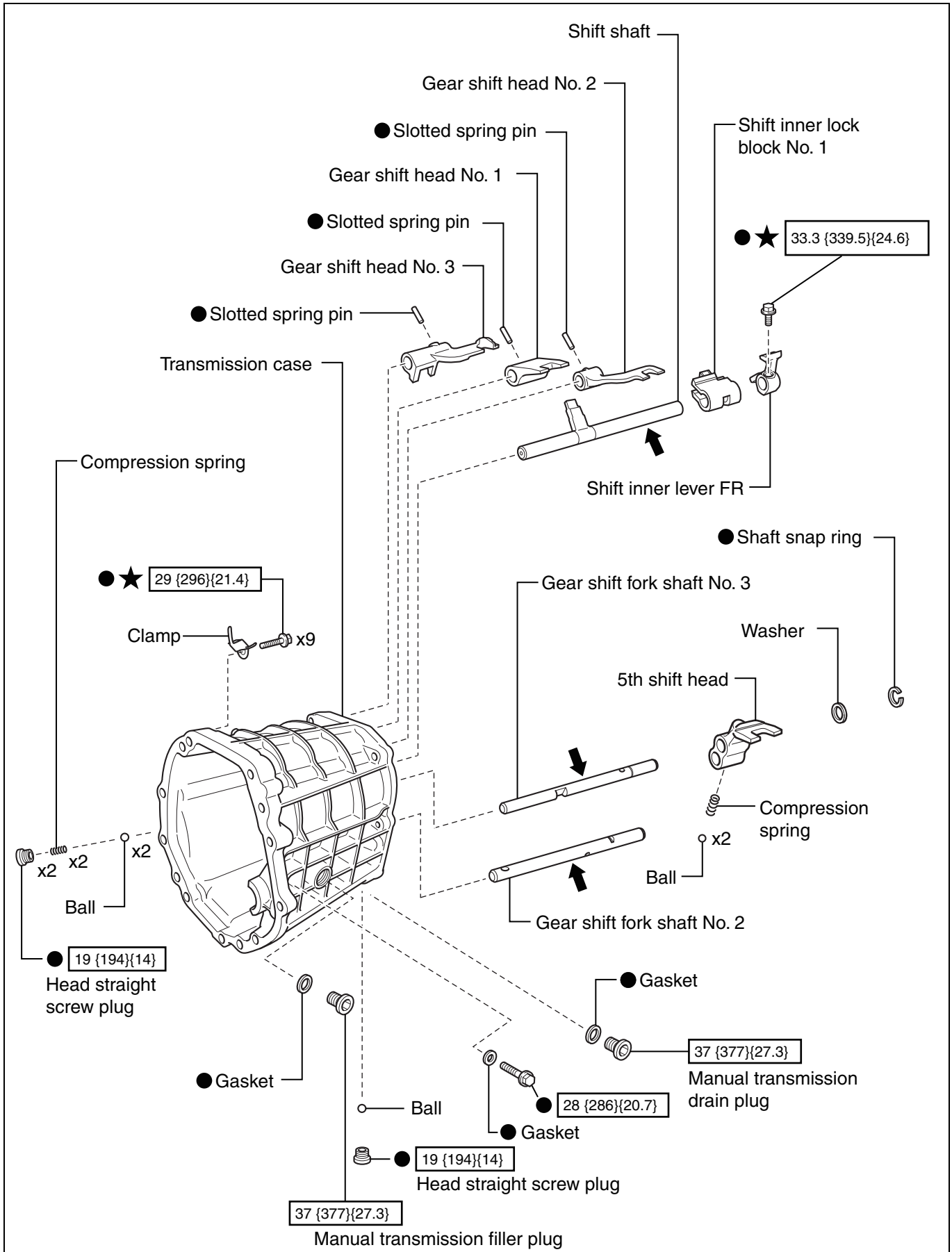
Shift shaft
Gear shift head No. 2
● Slotted spring pin
Gear shift head No. 1
● Slotted spring pin
Gear shift head No. 3
● Slotted spring pin
Transmission case
Compression spring
● ★ 29 {296}{21.4}
Clamp
x9
x2
x2
x2
Ball
● 19 {194}{14}
Head straight screw plug
● Gasket
Ball
● Gasket
● 19 {194}{14}
Head straight screw plug
37 {377}{27.3}
Manual transmission filler plug
● Gasket
37 {377}{27.3}
Manual transmission drain plug
● 28 {286}{20.7}
● Gasket
Gear shift fork shaft No. 2
Ball
x2
Compression spring
5th shift head
Washer
● Shaft snap ring
Gear shift fork shaft No. 3
Shift inner lock block No. 1
● ★ 33.3 {339.5}{24.6}
Shift inner lever FR
Manual transmission oil
N•m {kgf•cm}{ft•lbf} : Tightening torque
★ Locking part
● Non-reusable parts
MT-03006

MT

NOTE:
Be sure to use the recommended product or the substitute product for manual transmission oil. (Refer to MT - 4)

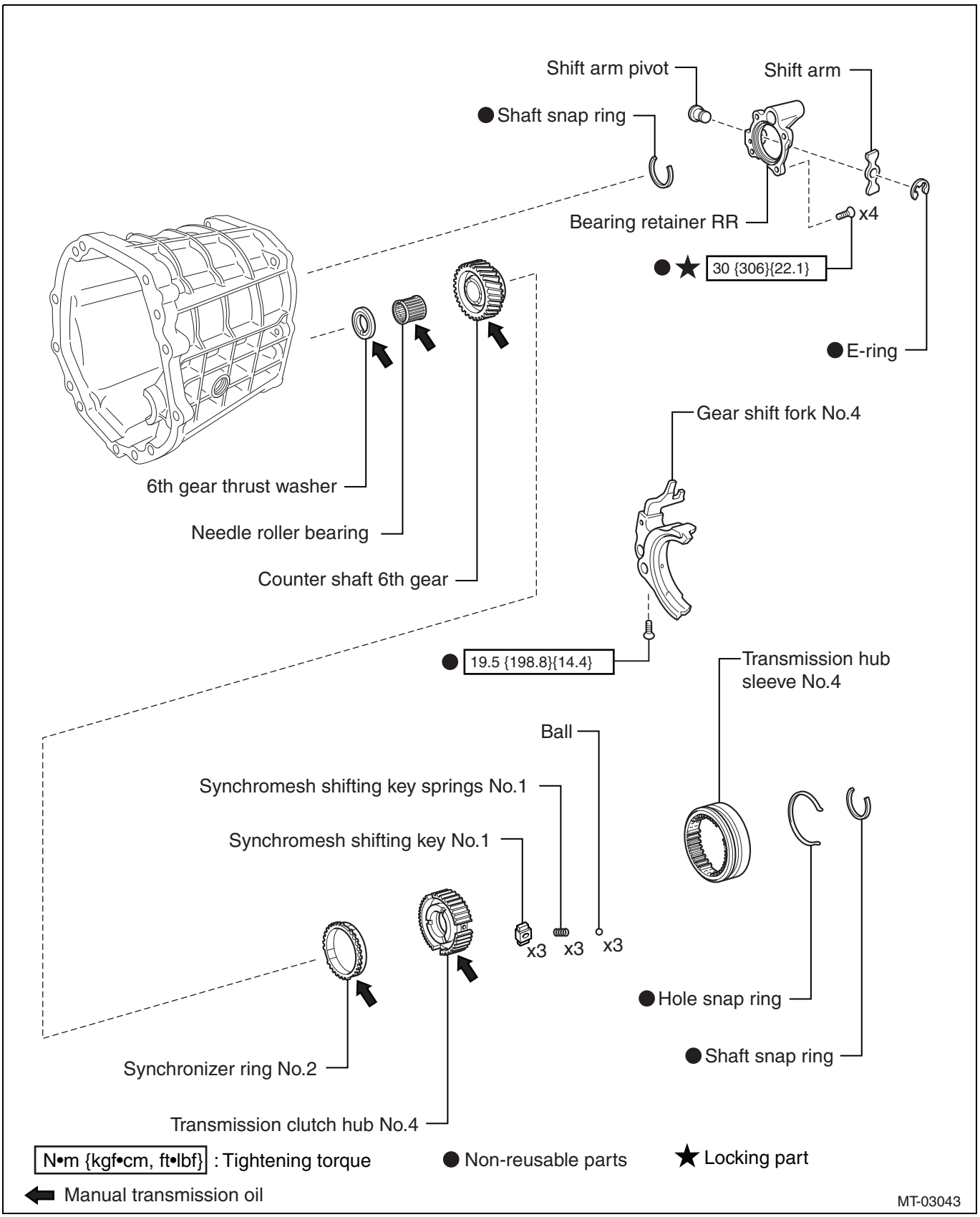

NOTE:
Be sure to use the recommended product or the substitute product for manual transmission oil. (Refer to MT - 4)

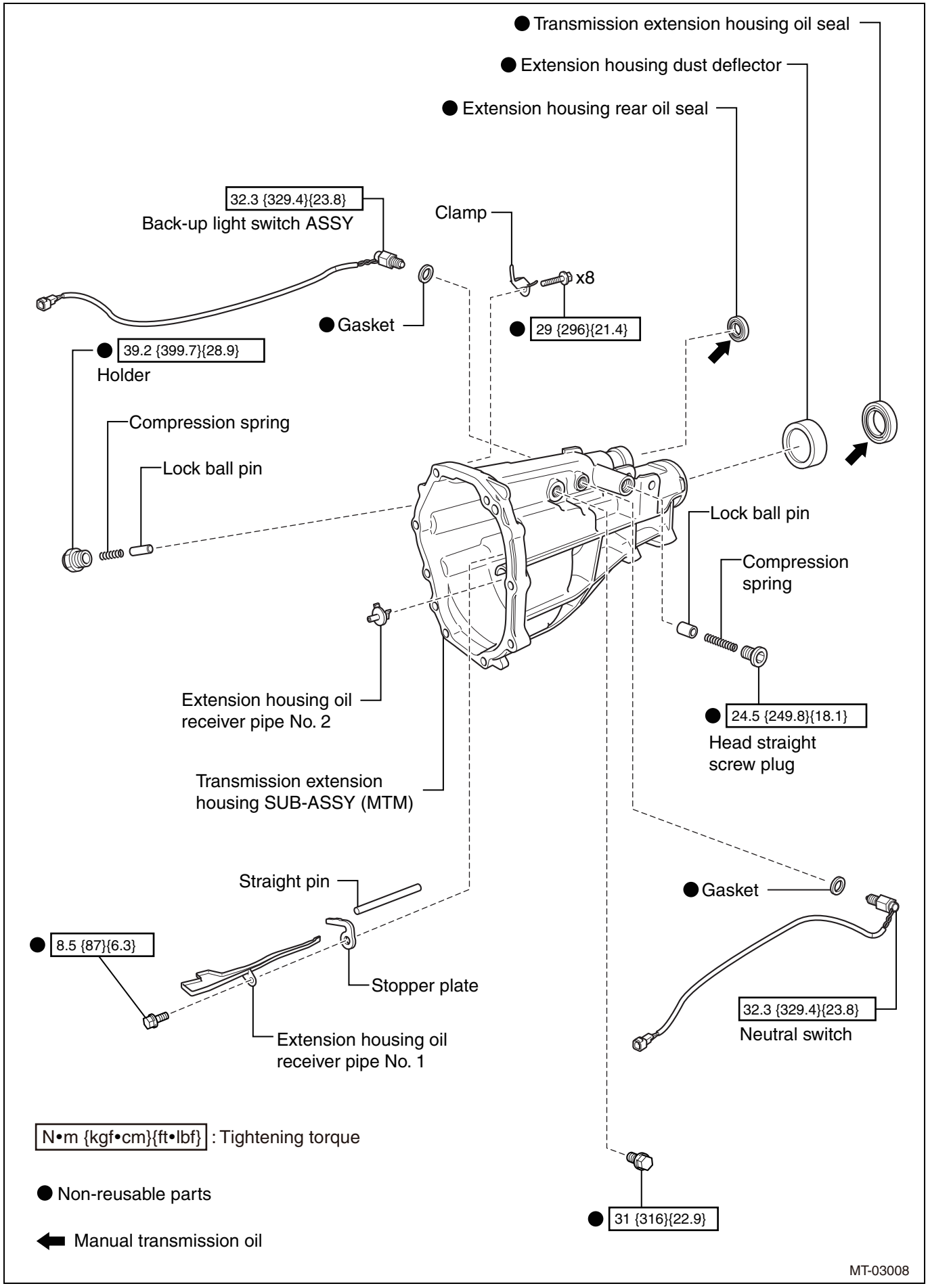
● Transmission extension housing oil seal
● Extension housing dust deflector
● Extension housing rear oil seal
32.3 {329.4}{23.8}
Back-up light switch ASSY
Clamp
x8
● Gasket
● 29 {296}{21.4}
● 39.2 {399.7}{28.9}
Holder
Compression spring
Lock ball pin
Lock ball pin
Compression spring
Extension housing oil receiver pipe No. 2
● 24.5 {249.8}{18.1}
Head straight screw plug
Transmission extension housing SUB-ASSY (MTM)
Straight pin
● Gasket
● 8.5 {87}{6.3}
Stopper plate
32.3 {329.4}{23.8}
Neutral switch
Extension housing oil receiver pipe No. 1
N•m {kgf•cm}{ft•lbf} : Tightening torque
● Non-reusable parts
● 31 {316}{22.9}
Manual transmission oil
MT-03008

MT

NOTE:
Be sure to use the recommended product or the substitute product for manual transmission oil. (Refer to MT - 4)

Disassembly

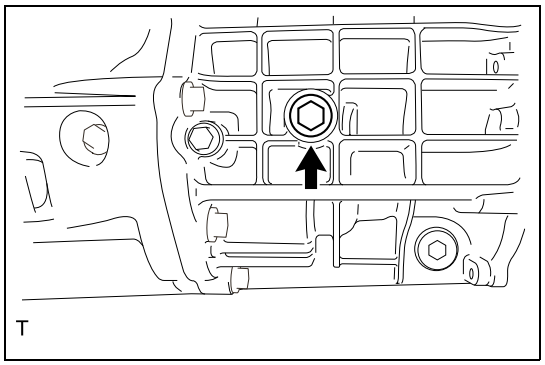

1. Removal of manual transmission filler plug
   (1) Remove the manual transmission filler plug and the gasket.

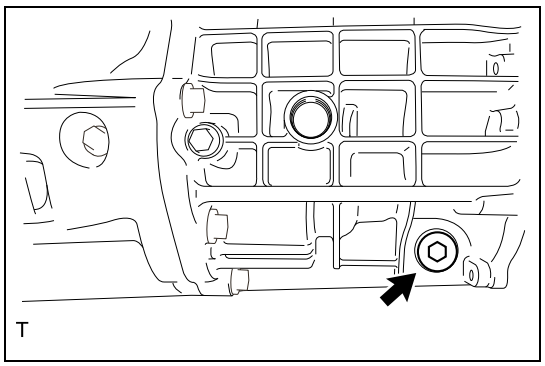

2. Removal of manual transmission drain plug
   (1) Remove the manual transmission drain plug and the gasket.

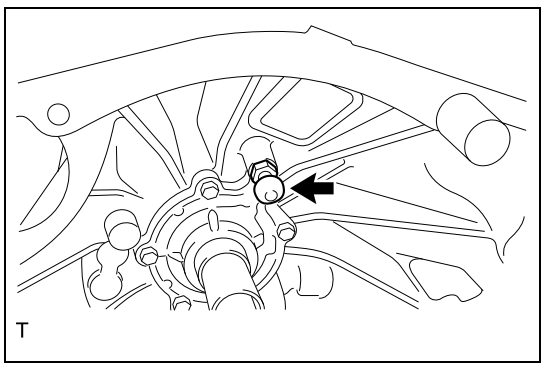

3. Removal of clutch release fork support
   (1) Remove the clutch release fork support from the clutch housing.

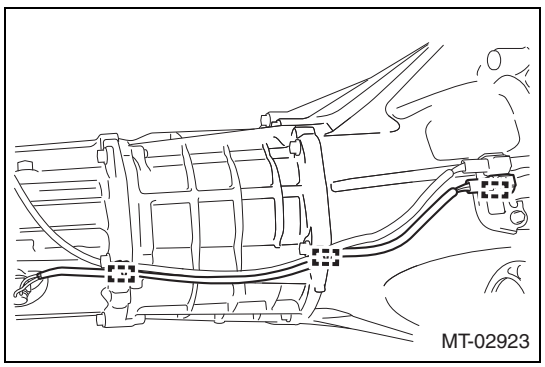

4. Removal of back-up light switch ASSY
   (1) Release the 3 clamps.

MT

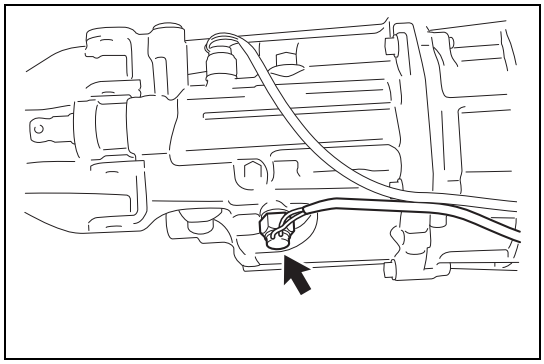

(2) Remove the back-up light switch ASSY and the gasket.

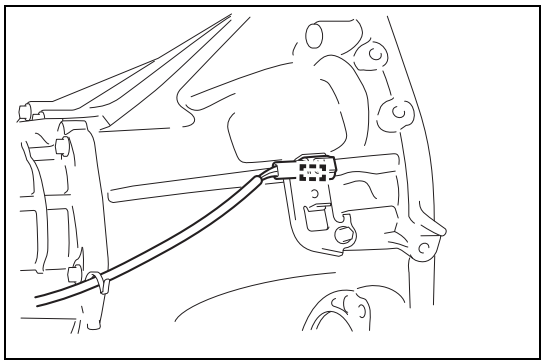

5. Removal of neutral switch
   (1) Release the clamp.

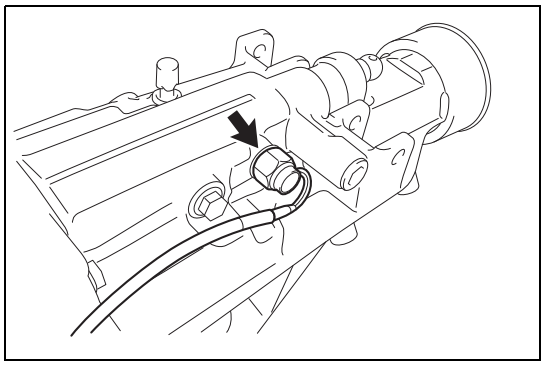

(2) Remove the neutral switch and the gasket.

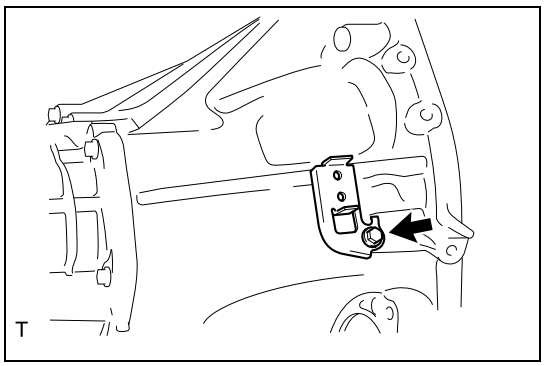

6. Removal of wiring harness clamp bracket
   (1) Remove the bolt, and then remove the wiring harness clamp bracket.

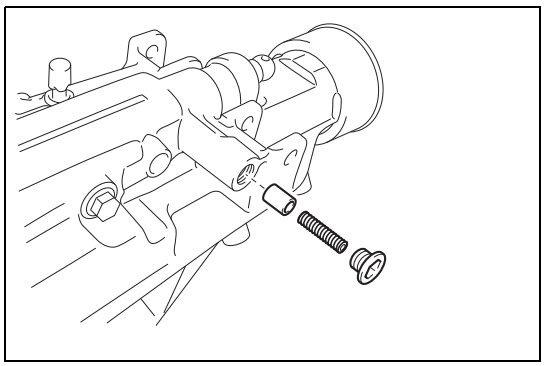

7. Removal of lock ball pin
   (1) Remove the head straight screw plug, compression spring, and lock ball pin.

MT

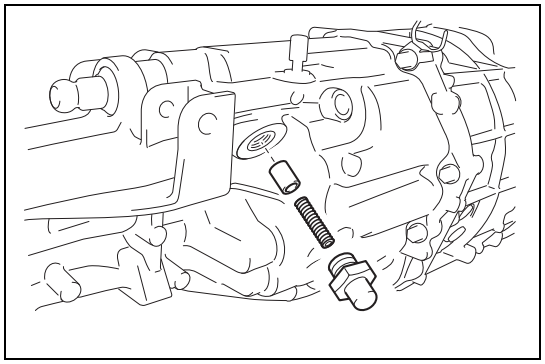

8. Removal of holder
   (1) Remove the holder, compression spring, and lock ball pin.

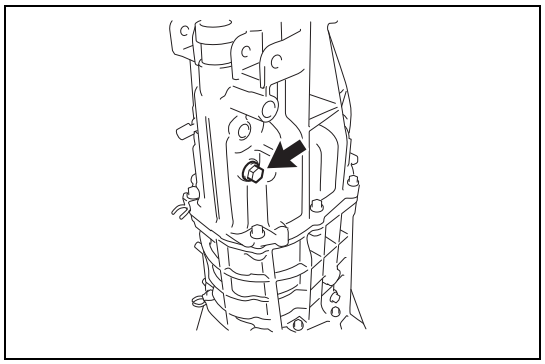

9. Removal of transmission extension housing SUB-ASSY (MTM)
   (1) Remove the bolt.

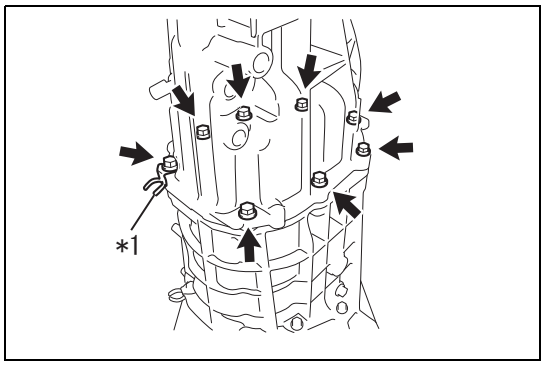

   (2) Remove the 8 bolts and the clump.

Captions in illustration

*1	Clamp

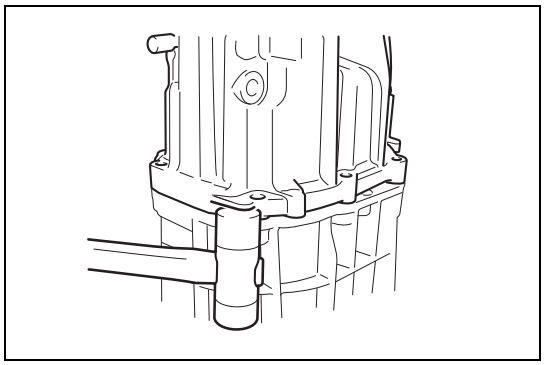

   (3) Remove the transmission extension housing SUB-ASSY (MTM).
   CAUTION:
   - Do not damage the transmission extension housing SUB-ASSY (MTM).
   - Be sure to remove the transmission extension housing SUB-ASSY (MTM) with the shift position in neutral status.

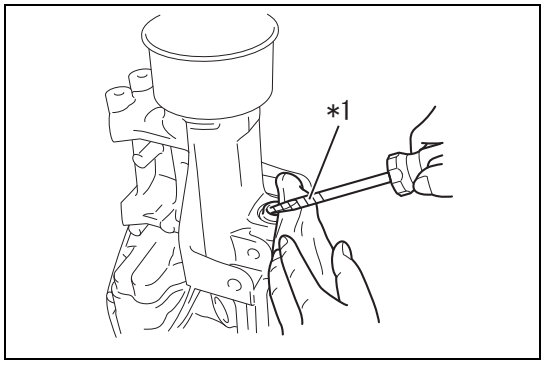

10. Removal of extension housing rear oil seal
    (1) Remove the extension housing rear oil seal.

Captions in illustration

*1	Protective tape

CAUTION:
Do not damage the transmission extension housing SUB-ASSY (MTM).
NOTE:
Remove while applying a cloth to prevent damage to the transmission extension housing SUB-ASSY (MTM).

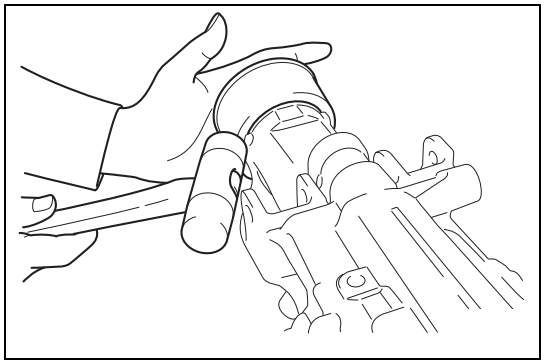

11. Removal of extension housing dust deflector
    (1) Remove the extension housing dust deflector.

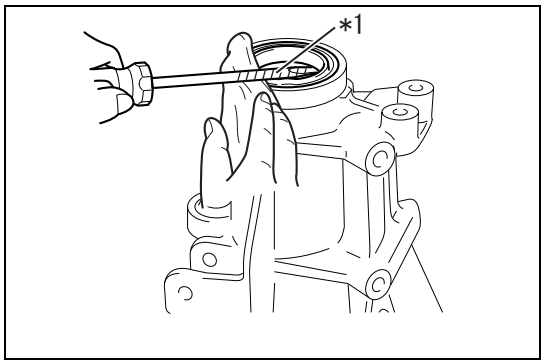

12. Removal of transmission extension housing oil seal
    (1) Remove the transmission extension housing oil seal.

Captions in illustration

*1	Protective tape

CAUTION:
Do not damage the transmission extension housing SUB-ASSY (MTM).
NOTE:
Remove while applying a cloth to prevent damage to the transmission extension housing SUB-ASSY (MTM).

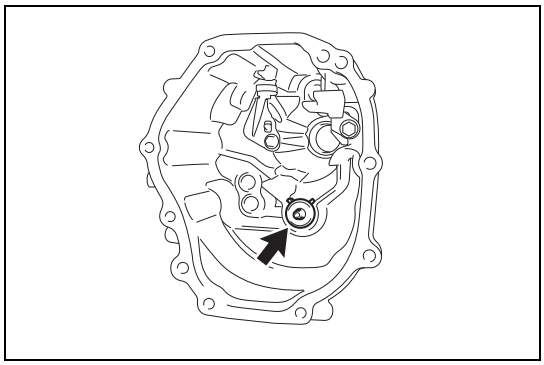

13. Removal of extension housing oil receiver pipe No.2
    (1) Remove the extension housing oil receiver pipe No.2.

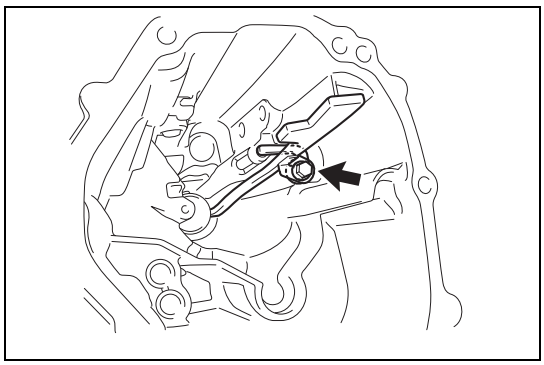

14. Removal of extension housing oil receiver pipe No.1
    (1) Remove the bolt to remove the extension housing oil receiver pipe No.1 and the stopper plate.

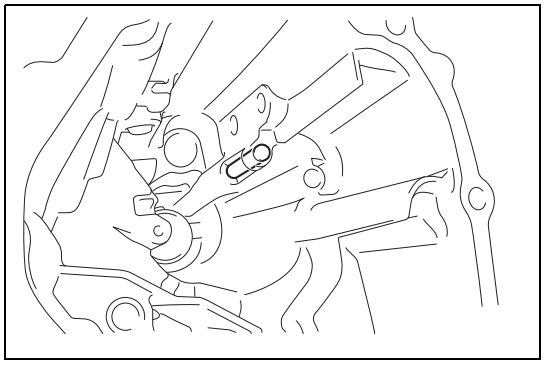

    (2) Remove the straight pin.

MT

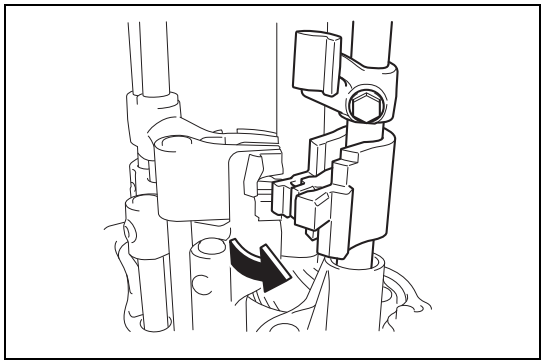

15. Removal of shift shaft
    (1) Slide and remove the shift shaft and the shift inner lock block No.1.

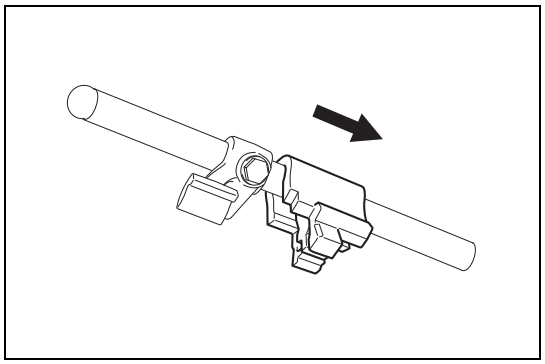

16. Removal of shift inner lock block No.1.
    (1) Remove the shift inner lock block No.1 from the shift shaft.

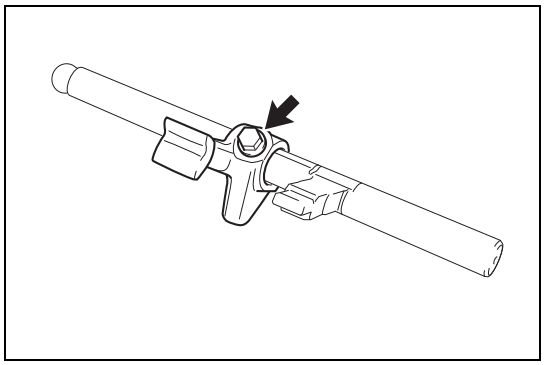

17. Removal of shift inner lever FR
    (1) Remove bolt, then remove the shift inner lever FR from the shift shaft.
    CAUTION:
    Verify the direction of the parts.

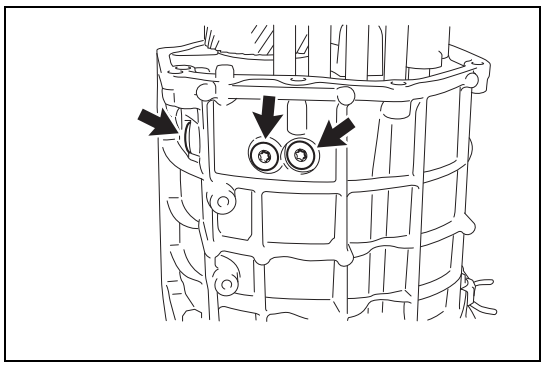

18. Removal of head straight screw plug
    (1) Remove the 3 head straight screw plugs.

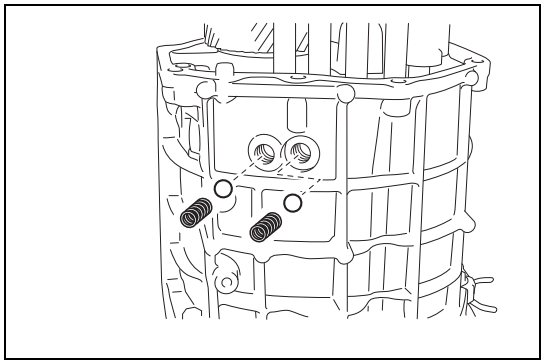

    (2) Remove the 2 compression springs and the 2 balls.

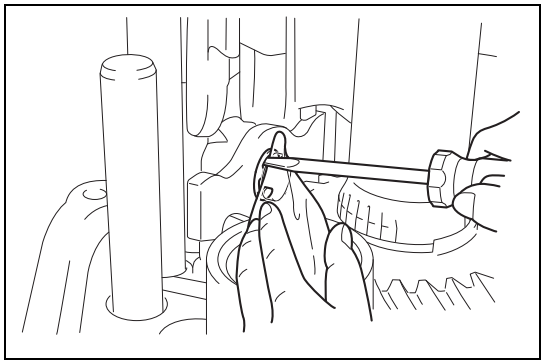

19. Removal of shift arm
    (1) Remove the E-ring.
    CAUTION:
    Hold the E-ring with a cloth to prevent it from flying out.

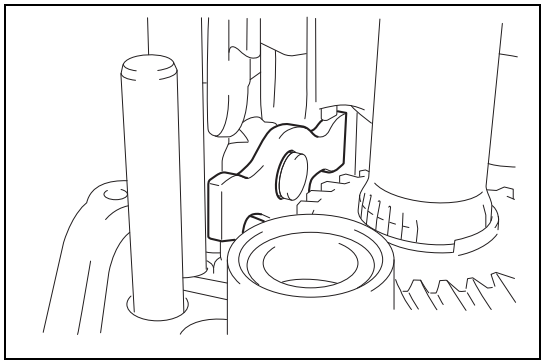

    (2) Remove the shift arm.

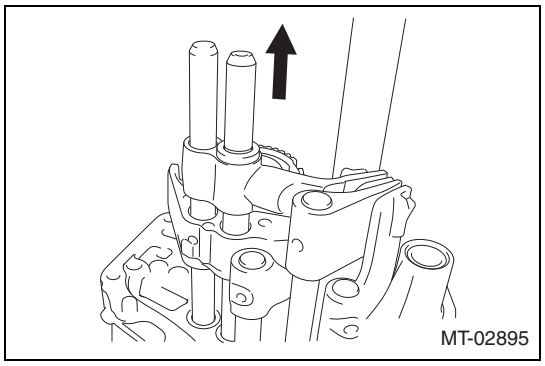

20. Removal of gear shift fork shaft No.3
    (1) Remove the gear shift fork shaft No.3.
    CAUTION:
    - Do not drop the ball of the 5th shift head.
    - The ball of the transmission case may fall in the transmission case. If the ball falls, pick the ball up when removing the transmission case.
    (2) Remove the ball of the 5th shift head.

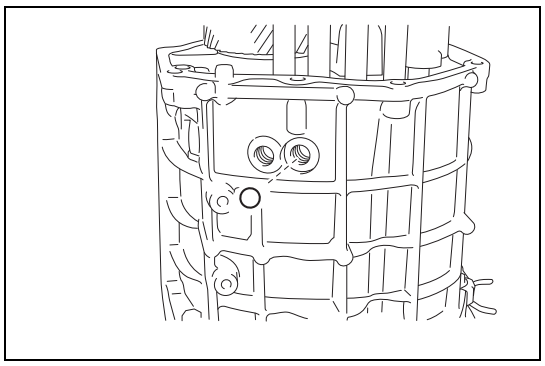

    (3) Remove the ball.

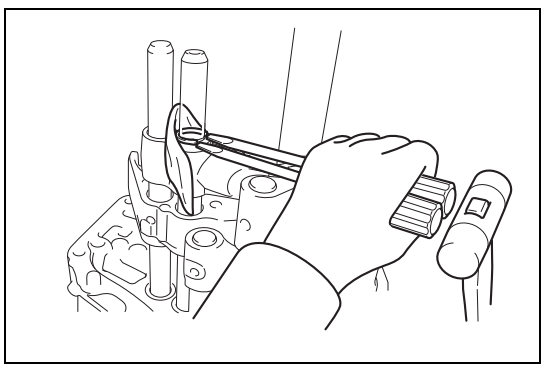

21. Removal of 5th shift head
    (1) Remove the shaft snap ring.
    CAUTION:
    Hold the shaft snap ring with a cloth to prevent it from flying out.

MT

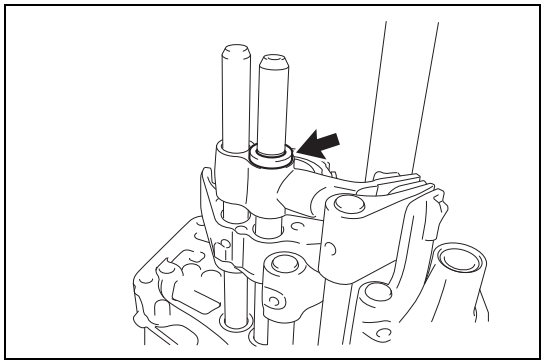

(2) Remove the washer.

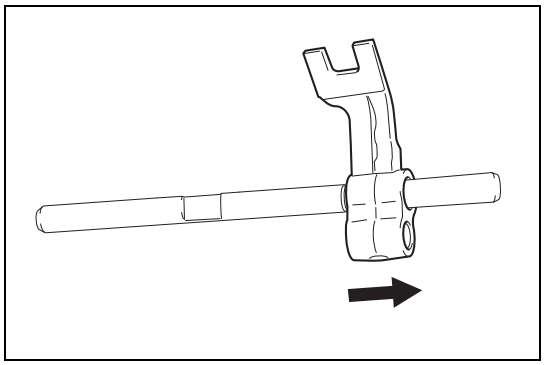

(3) Remove the 5th shift head, then remove the ball and the compression spring.
CAUTION:
Do not slide the 5th shift head to prevent the ball and the compression spring from falling.

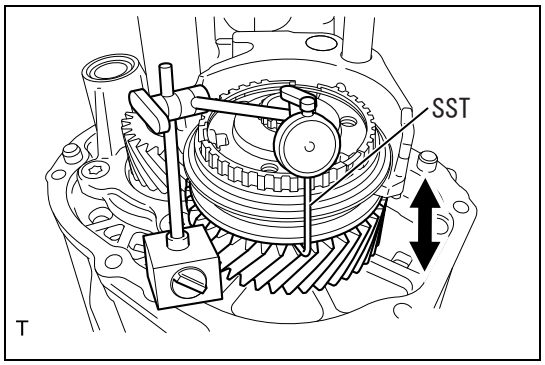

22. Check of counter shaft 6th gear thrust clearance
(1) Use the SST to check the thrust clearance.
SST 09350-20015 (09350-06120), 498255400
Standard value: 0.10 to 0.40 mm {0.00394 to 0.0157 in}
Limit: 0.40 mm {0.0157 in}
NOTE:
If the value exceeds the limit, replace the counter shaft 6th gear, transmission clutch hub No.4, 6th gear thrust washer, needle roller bearing, and counter shaft with new ones.

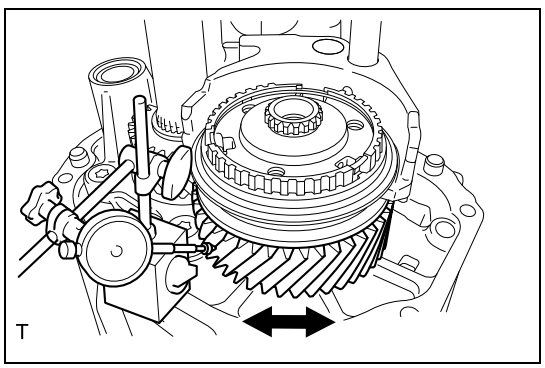

23. Check of counter shaft 6th gear radial clearance
(1) Check the radial clearance.
Standard value: 0.015 to 0.068 mm {0.000590 to 0.00268 in}
Limit: 0.068 mm {0.00268 in}
NOTE:
If the value exceeds the limit, replace the counter shaft 6th gear, needle roller bearing, and counter shaft with new ones.

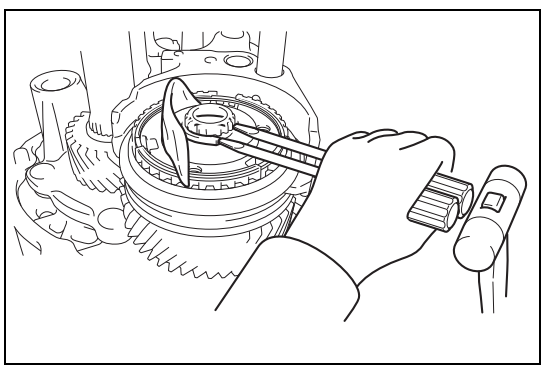

24. Removal of transmission clutch hub No.4
(1) Remove the shaft snap ring.
CAUTION:
Hold the shaft snap ring with a cloth to prevent it from flying out.

MT

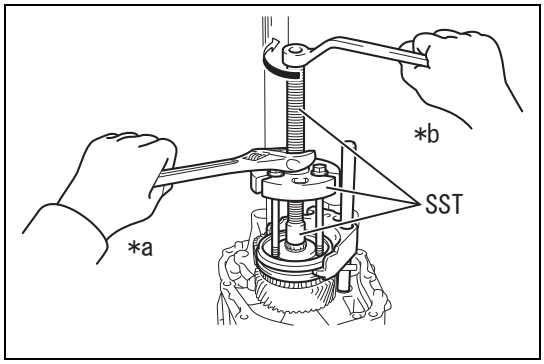

(2) Use the SST to remove the transmission clutch hub No.4 together with the transmission hub sleeve No.4, gear shift fork No.4, and gear shift fork shaft No.2 as a unit.

Captions in illustration

*a	Hold
*b	Drive

SST 09950-30012 (09951-03010, 09953-03010, 09956-03010)

CAUTION:
Verify the direction of the parts.

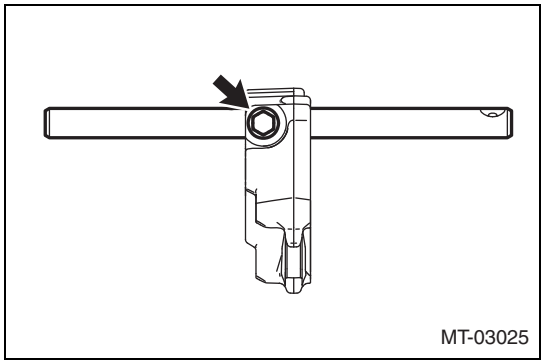

25. Removal of gear shift fork No.4
    (1) Remove the bolt, then remove the gear shift fork No. 4 from the gear shift fork shaft No. 2.

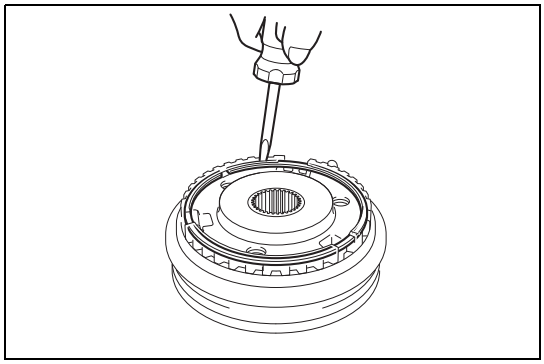

26. Removal of transmission hub sleeve No.4
    (1) Remove the hole snap ring.

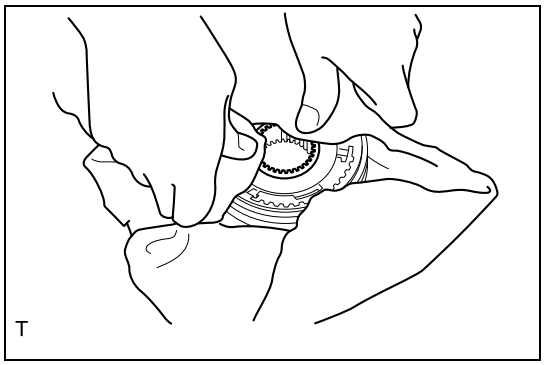

(2) Remove the transmission hub sleeve No.4, then remove the 3 synchromesh shifting keys No.1, 3 synchromesh shifting key springs No.1, and 3 balls from the transmission clutch hub No.4.

CAUTION:
- Keep the synchromesh shifting keys No.1, synchromesh shifting key springs No.1, and balls from flying out using a cloth.
- Be careful not to deform the synchromesh shifting key springs No.1.
- Verify the direction of the parts.

NOTE:
Perform the work without displacing the positions of the transmission clutch hub No.4 and synchromesh shifting keys No.1.

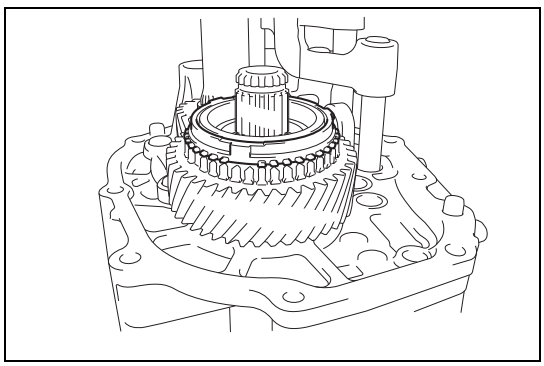

27. Removal of synchronizer ring No.2
    (1) Remove the synchronizer ring No.2.

MT

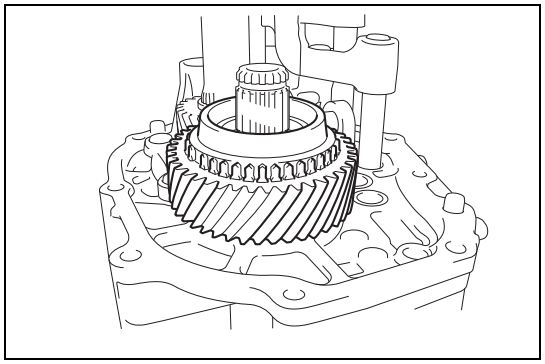

28. Removal of counter shaft 6th gear
    (1) Remove the counter shaft 6th gear.

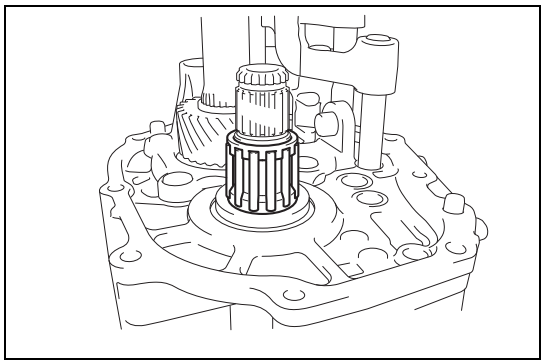

29. Removal of needle roller bearing
    (1) Remove the needle roller bearing.

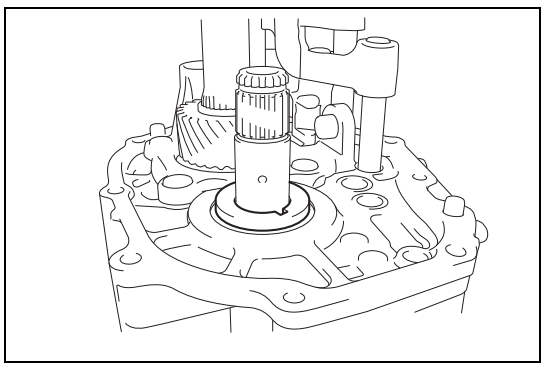

30. Removal of 6th gear thrust washer
    (1) Remove the 6th gear thrust washer.
    CAUTION:
    Verify the direction of the parts.

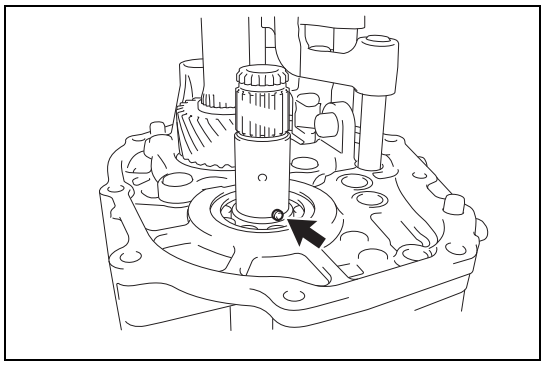

    (2) Remove the straight pin.

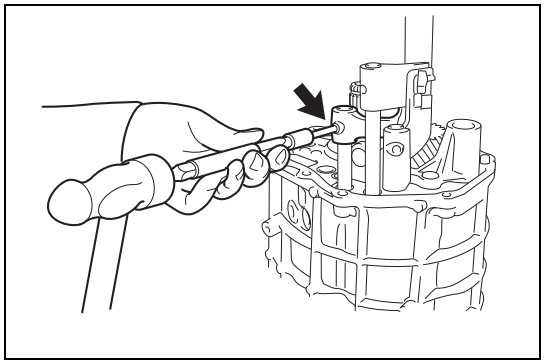

31. Removal of gear shift head No.2
    (1) Remove the slotted spring pin.
    (2) Remove the gear shift head No.2 from the gear shift fork shaft No.2.
    CAUTION:
    - Hold the slotted spring pin with a cloth to prevent it from flying out.
    - Do not drop the slotted spring pin from the fork shaft hole into the inside.
    - Verify the direction of the parts.

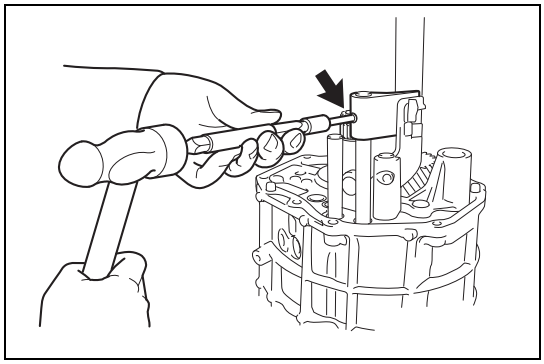

32. Removal of gear shift head No.1.
    (1) Remove the slotted spring pin.
    (2) Remove the gear shift head No.1 from the gear shift fork shaft No.1.

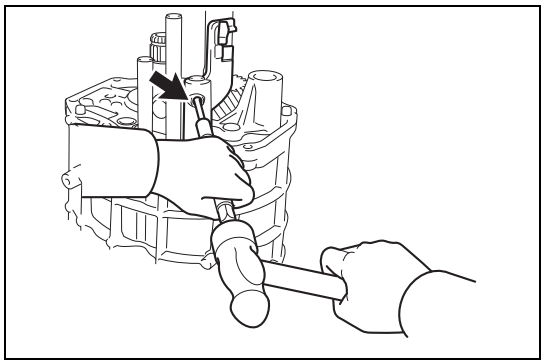

33. Removal of gear shift head No.3
    (1) Remove the slotted spring pin.
    (2) Remove the gear shift head No.3 from the gear shift fork shaft No.3.

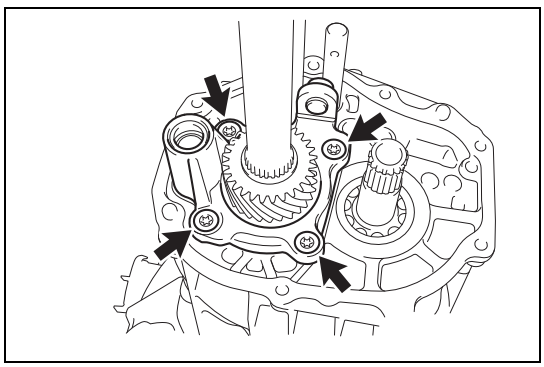

34. Removal of bearing retainer RR
    (1) Remove 4 TORX bolts to remove the bearing retainer RR.

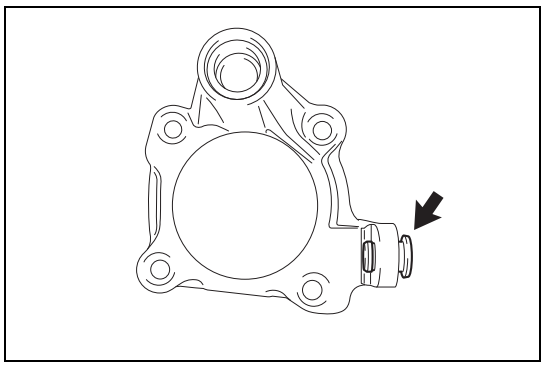

    (2) Remove the shift arm pivot.

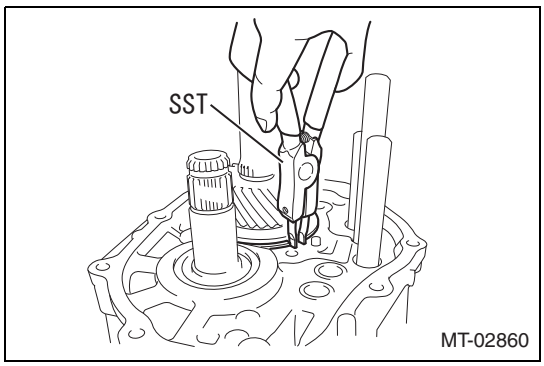

35. Removal of transmission case
    (1) Use the SST to remove the shaft snap ring.
        SST 499895400

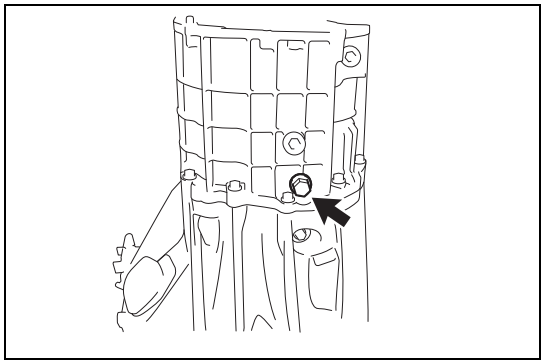

(2) Remove the reverse idler gear shaft fixing bolt and the gasket. (Transmission case side)

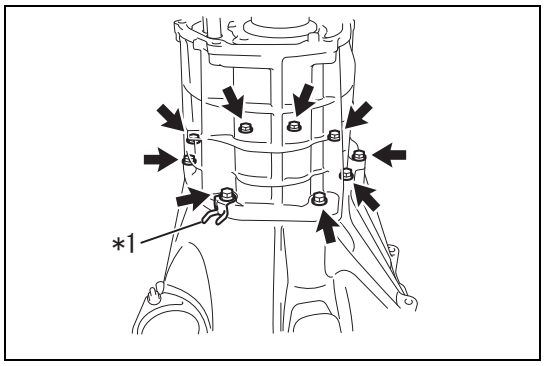

(3) Remove the 9 bolts and the clump.

Captions in illustration

*1	Clamp

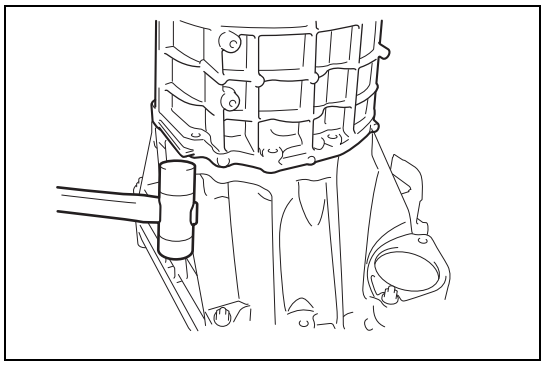

(4) Remove the transmission case.
CAUTION:
Do not damage the transmission case.

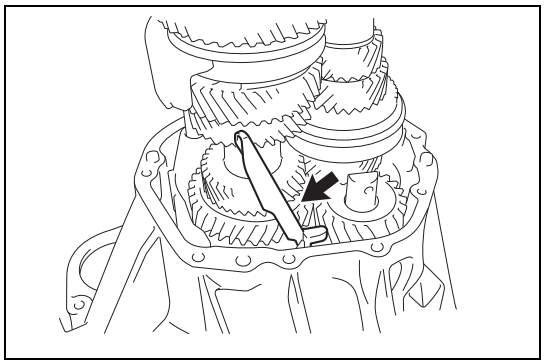

36. Removal of oil receiver pipe
(1) Remove the oil receiver pipe.

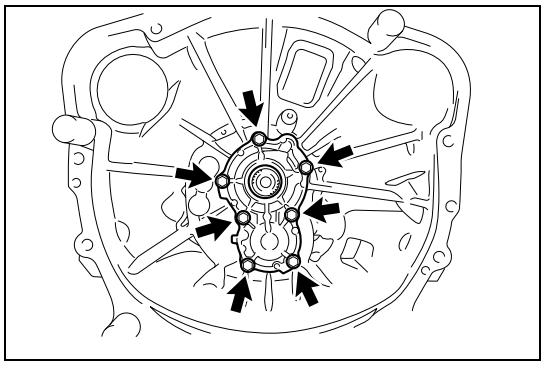

37. Removal of bearing retainer FR
(1) Remove the 7 bolts, then remove the bearing retainer FR.

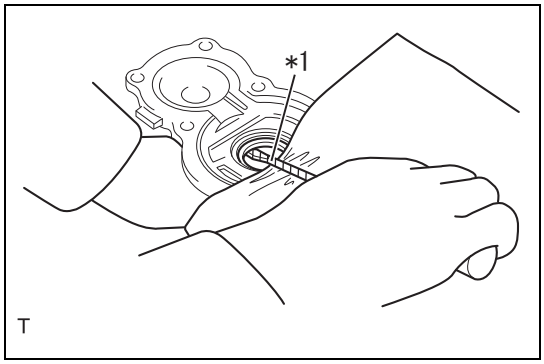

38. Removal of transmission front bearing retainer oil seal
    (1) Remove the transmission front bearing retainer oil seal.

Captions in illustration

*1	Protective tape

CAUTION:
Do not damage the bearing retainer FR.
NOTE:
Remove while applying a cloth to prevent damage to the bearing retainer FR.

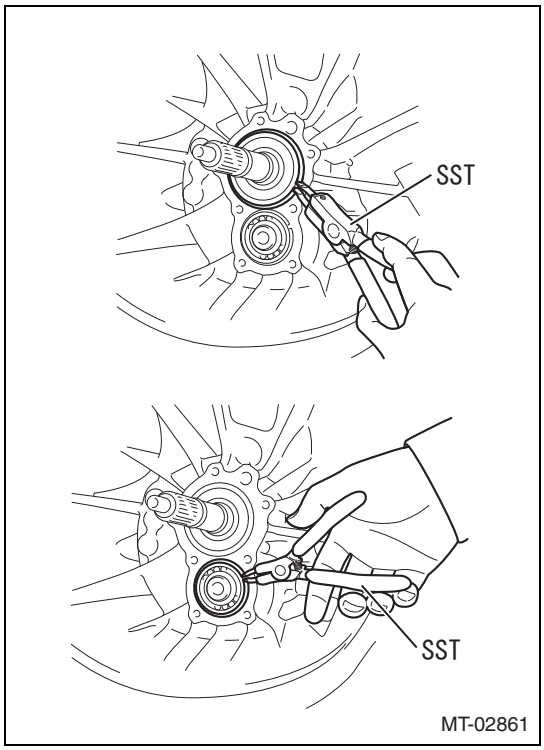

39. Removal of counter shaft
    (1) Use the SST to remove the 2 shaft snap rings.
    SST 499895400
    NOTE:
    Remove the shaft snap rings on the input shaft side and the counter shaft side.

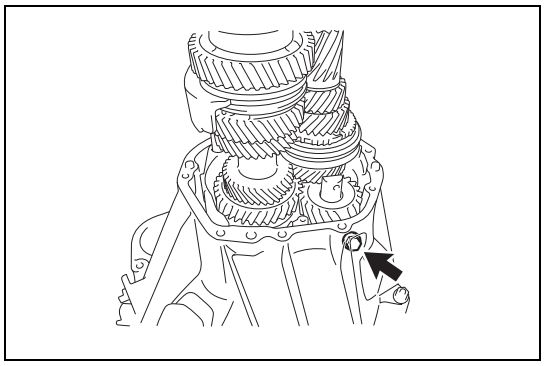

(2) Remove the bolt and the gasket to free the reverse idler gear and the reverse idler gear shaft. (Clutch housing side)

MT

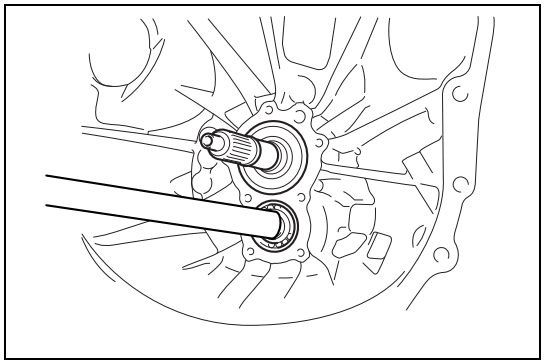

(3) Remove the input shaft, output shaft, counter shaft, reverse idler gear, reverse idler gear shaft, gear shift fork shaft No.1, gear shift fork shaft No.2, and gear shift fork shaft No.3 as a unit by hitting them from the clutch housing side with the handle of a hammer.

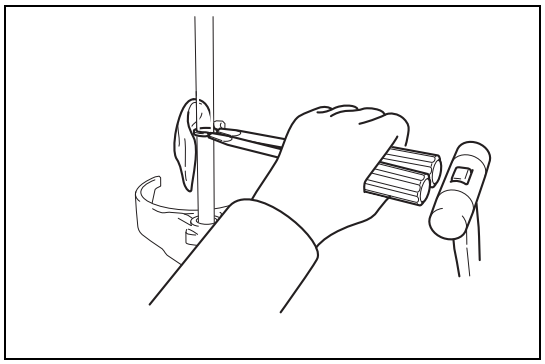

40. Removal of gear shift fork shaft No.2
    (1) Remove the shaft snap ring.
    CAUTION:
    Hold the shaft snap ring with a cloth to prevent it from flying out.

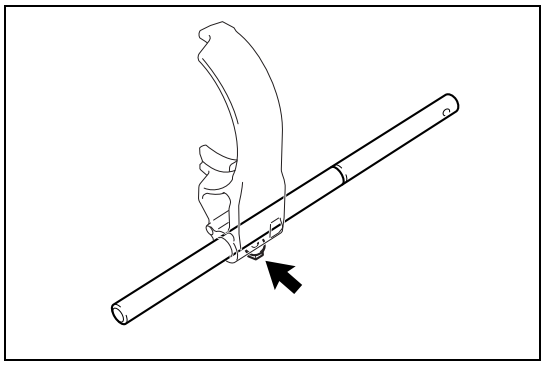

(2) Remove the bolt, then remove the gear shift fork shaft No.2.

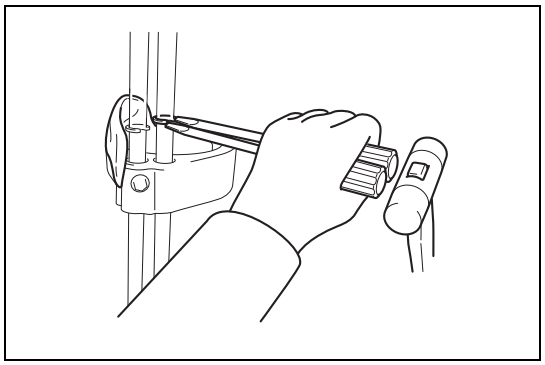

41. Removal of gear shift fork shaft No.1
    (1) Remove the shaft snap ring.
    CAUTION:
    Hold the shaft snap ring with a cloth to prevent it from flying out.

MT

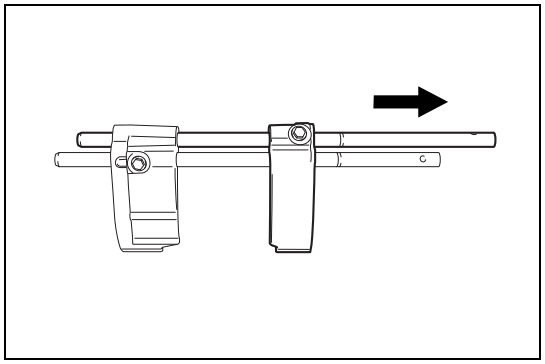

(2) Remove the gear shift fork shaft No.1 and the gear shift fork No.1 as a unit.

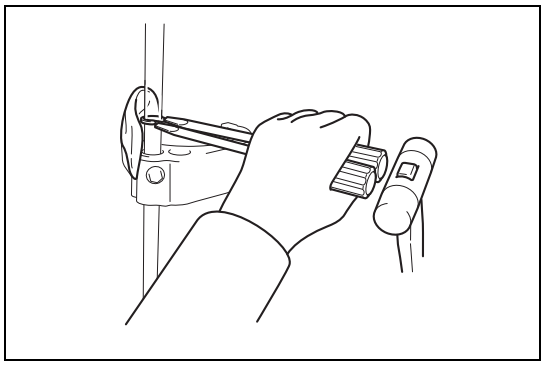

(3) Remove the shaft snap ring.
CAUTION:
Hold the shaft snap ring with a cloth to prevent it from flying out.

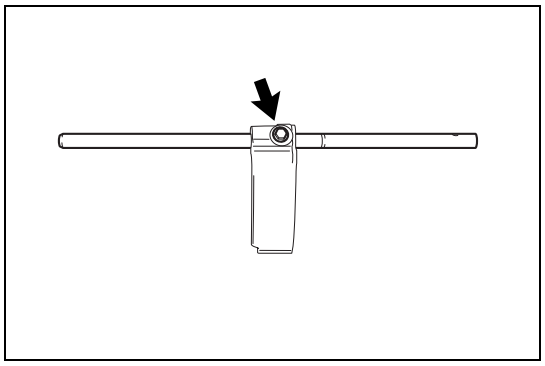

(4) Remove the bolt, then remove the gear shift fork shaft No.1.

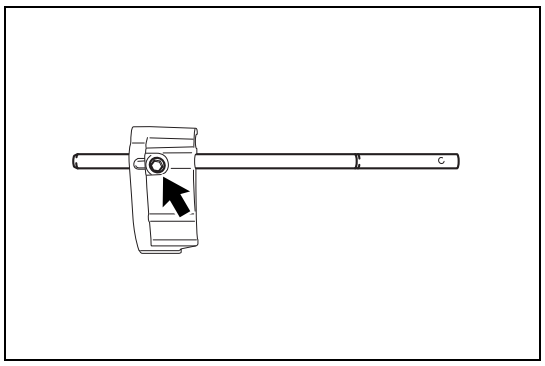

42. Removal of gear shift fork shaft No.3
(1) Remove the bolt, then remove the gear shift fork shaft No.3.

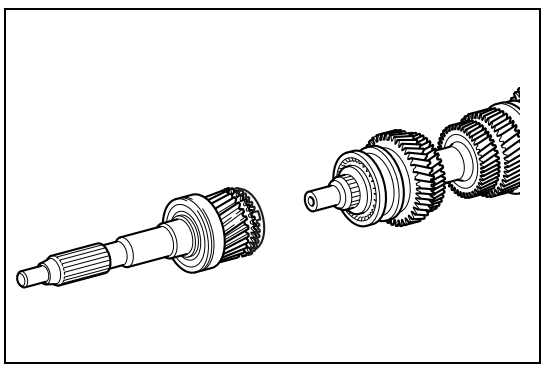

43. Removal of input shaft
(1) Remove the input shaft from the output shaft.

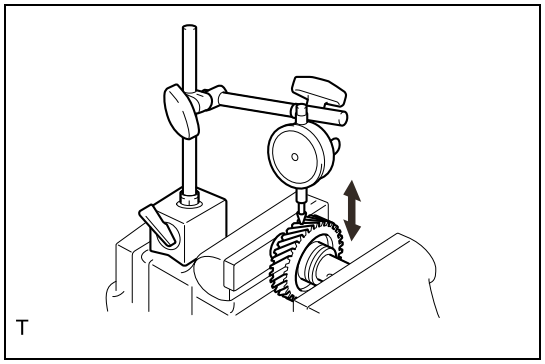
T

44. Check of reverse idler gear radial clearance
    (1) Secure the reverse idler gear shaft with a vise and check the radial clearance.
    Standard value: 0.040 to 0.082 mm {0.00157 to 0.00323 in}
    Limit: 0.082 mm {0.00323 in}
    NOTE:
    If the value exceeds the limit, replace the reverse idler gear and the reverse idler gear shaft with new ones.

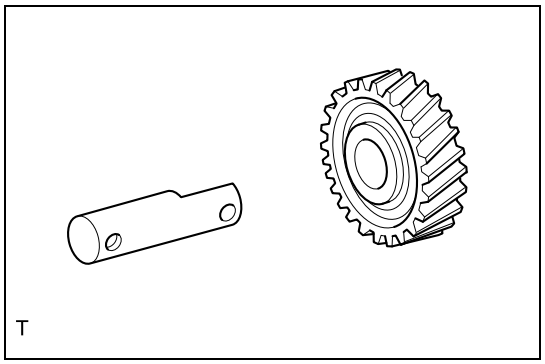
T

45. Removal of reverse idler gear shaft
    (1) Remove the reverse idler gear shaft from the reverse idler gear.

Inspection

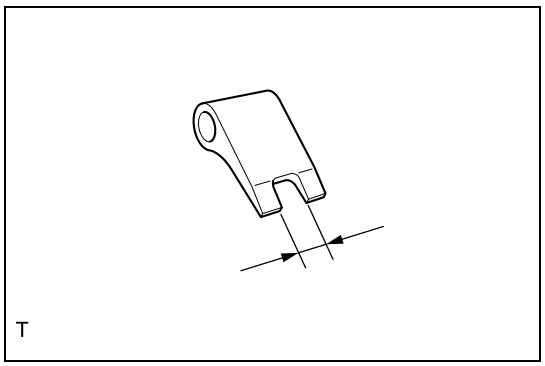
T

1. Gear shift head No.1 check
    (1) Check the dimension of the gear shift head No.1 groove.
    Standard value: 15.2 to 15.4 mm {0.59843 to 0.60630 in}
    Limit: 15.4 mm {0.60630 in}
    NOTE:
    If the value exceeds the limit, replace the gear shift head No.1 with a new one.

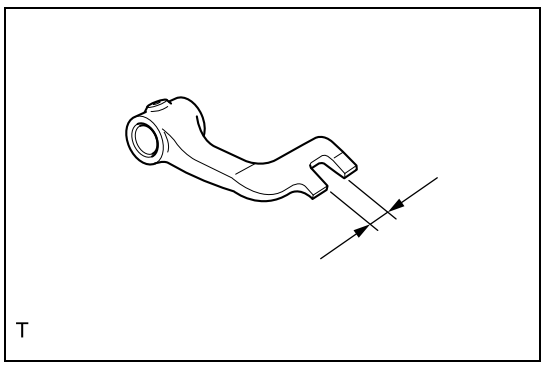
T

2. Gear shift head No.2 check
    (1) Check the dimension of the gear shift head No.2 groove.
    Standard value: 15.2 to 15.4 mm {0.59843 to 0.60630 in}
    Limit: 15.4 mm {0.60630 in}
    NOTE:
    If the value exceeds the limit, replace the gear shift head No.2 with a new one.

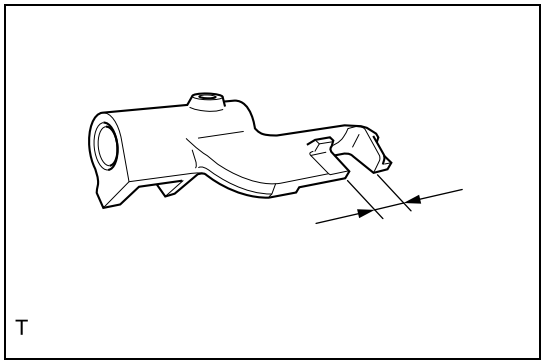
T

3. Gear shift head No.3 check
   (1) Check the dimension of the gear shift head No.3 groove.
   Standard value: 15.2 to 15.4 mm {0.59843 to 0.60630 in}
   Limit: 15.4 mm {0.60630 in}
   NOTE:
   If the value exceeds the limit, replace the gear shift head No.3 with a new one.

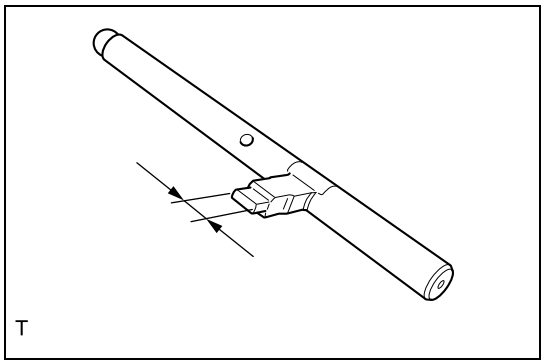
T

4. Shift shaft check
   (1) Check the thickness of the shift shaft claw.
   Standard value: 14.8 to 15.0 mm {0.583 to 0.591 in}
   Limit: 14.8 mm {0.583 in}
   NOTE:
   If the value is smaller than the limit, replace the shift shaft with a new one.

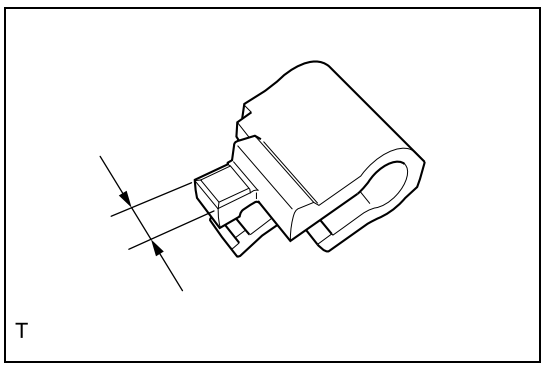
T

5. Check of shift inner lock block No.1.
   (1) Check the thickness of the shift inner lock block No.1 claw.
   Standard value: 14.8 to 15.0 mm {0.583 to 0.591 in}
   Limit: 14.8 mm {0.583 in}
   NOTE:
   If the value is smaller than the limit, replace the shift inner lock block No.1 with a new one.

MT

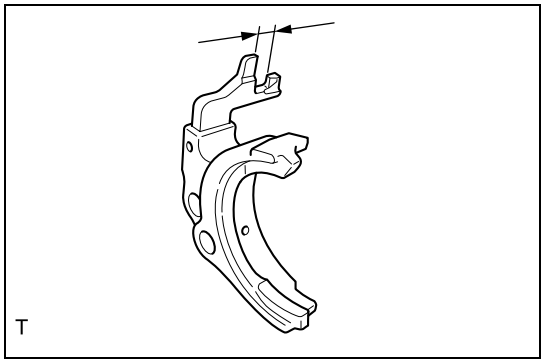
T

6. Gear shift fork No.4 check
   (1) Check the dimension of the gear shift fork No.4 groove.
   Standard value: 15.2 to 15.4 mm {0.59843 to 0.60630 in}
   Limit: 15.4 mm {0.60630 in}
   NOTE:
   If the value exceeds the limit, replace the gear shift fork No.4 with a new one.

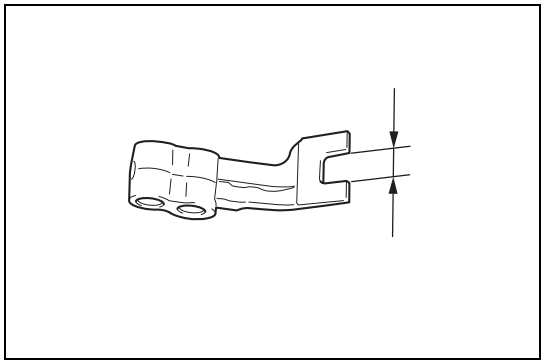

7. Check of 5th shift head
   (1) Check the dimension of the 5th shift head groove.
   Standard value: 15.2 to 15.4 mm {0.59843 to 0.60630 in}
   Limit: 15.4 mm {0.60630 in}
   NOTE:
   If the value exceeds the limit, replace the 5th shift head with a new one.

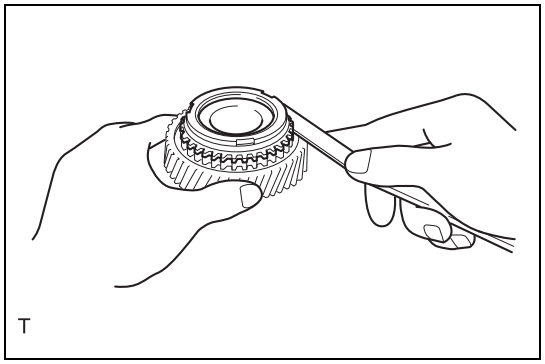

8. Check of synchronizer ring No.2
   (1) Apply manual transmission oil to the tapered cone portion of the counter shaft 6th gear. With the synchronizer ring No.2 pressed by hand, check the clearance between the synchronizer ring No.2 and the counter shaft 6th gear.
   Standard value: 0.88 to 1.52 mm {0.0346 to 0.0598 in}
   Limit: 0.88 mm {0.0346 in}
   CAUTION:
   Check the entire circumference of the gear.
   NOTE:
   - If the value is smaller than the limit, replace the synchronizer ring No.2 and the counter shaft 6th gear with new ones.
   - Be sure to use the recommended product or the substitute product for manual transmission oil. (Refer to MT - 4)

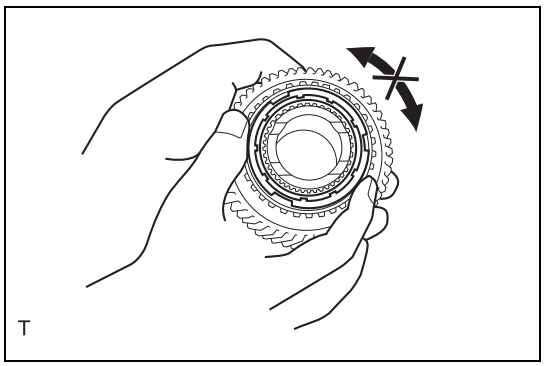

   (2) Apply manual transmission oil to the tapered cone portion of the counter shaft 6th gear, and check that the synchronizer ring No.2 does not slip in the circumferential direction while pressing it by hand.
   NOTE:
   - If it slips, replace the synchronizer ring No.2 and the counter shaft 6th gear with new ones.
   - Be sure to use the recommended product or the substitute product for manual transmission oil. (Refer to MT - 4)

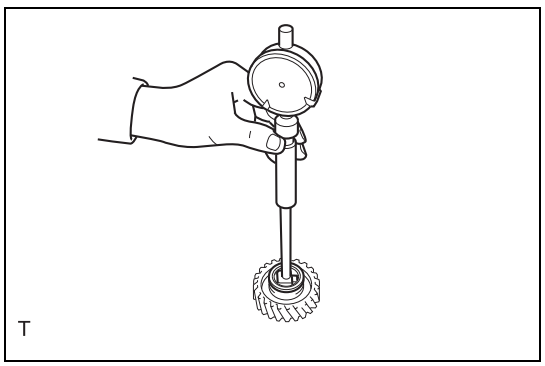

9. Check of counter shaft 6th gear
   (1) Check the inner diameter of the counter shaft 6th gear.
   Standard value: 34.015 to 34.040 mm {1.33917 to 1.34016 in}
   Limit: 34.040 mm {1.34016 in}
   NOTE:
   If the value exceeds the limit, replace the counter shaft 6th gear with a new one.

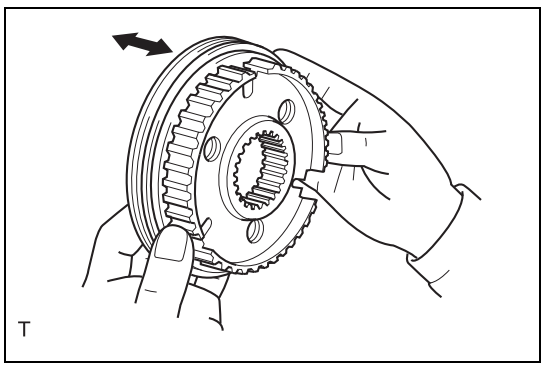

10. Check of transmission hub sleeve No.4
    (1) Check that the end of the spline gear of the transmission hub sleeve No.4 is not worn.
    NOTE:
    If it is worn, replace the transmission hub sleeve No.4 with a new one.
    (2) Install the transmission hub sleeve No.4 to the transmission clutch hub No.4 and check that they slide smoothly.
    NOTE:
    If they do not slide smoothly, replace the transmission hub sleeve No.4 and the transmission clutch hub No.4 with new ones.

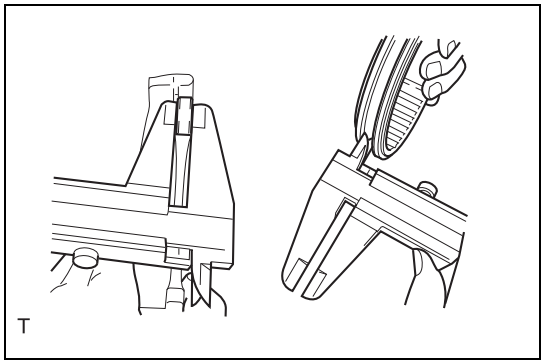
T

11. Check of transmission hub sleeve No.4 clearance
    (1) Check the thickness of the gear shift fork No.4 claw.
    Standard value: 7.9 to 8.0 mm {0.311 to 0.315 in}
    Limit: 7.9 mm {0.311 in}
    NOTE:
    If the value is smaller than the limit, replace the gear shift fork No.4 with a new one.
    (2) Measure the groove of the transmission hub sleeve No.4 and calculate the clearance between it and the gear shift fork No.4.
    Standard value: 0.15 to 0.35 mm {0.00590 to 0.0138 in}
    Limit: 0.35 mm {0.0138 in}
    NOTE:
    If the value exceeds the limit, replace the gear shift fork No.4 and the transmission hub sleeve No.4 with new ones as a set.

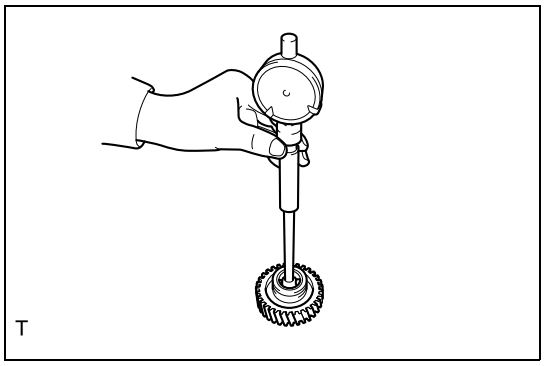
T

12. Reverse idler gear check
    (1) Check the inner diameter of the reverse idler gear.
    Standard value: 22.040 to 22.061mm {0.86771 to 0.86854 in}
    Limit: 22.061mm {0.86854 in}
    NOTE:
    If the value exceeds the limit, replace the reverse idler gear with a new one.

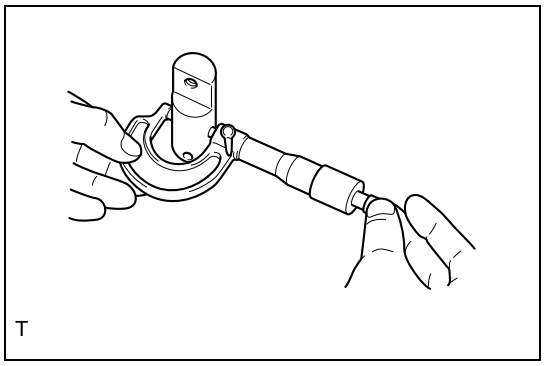
T

13. Reverse idler gear shaft check
    (1) Check the outer diameter of the reverse idler gear shaft.
    Standard value: 21.979 to 22.000 mm {0.86531 to 0.86614 in}
    Limit: 21.979 mm {0.86531 in}
    NOTE:
    If the value is smaller than the limit, replace the reverse idler gear shaft with a new one.

MT

Assembly

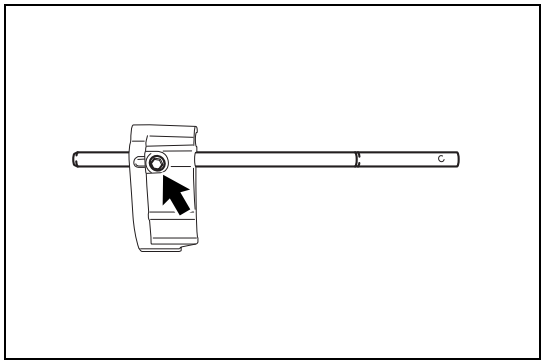

1. Installation of gear shift fork shaft No.3
    (1) Install the gear shift fork shaft No.3 to the gear shift fork No.3 with a new bolt.
    Standard value:T=19.5N·m {198.8kgf·cm} {14.4ft·lbf}

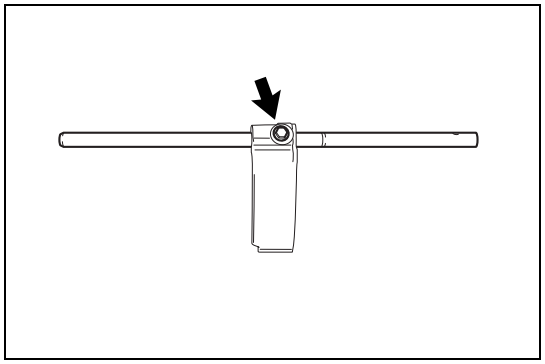

2. Installation of gear shift fork shaft No.1
   (1) Install the gear shift fork shaft No.1 to the gear shift fork No.1 with a new bolt.
   Standard value:T=19.5N·m {198.8kgf·cm} {14.4ft·lbf}

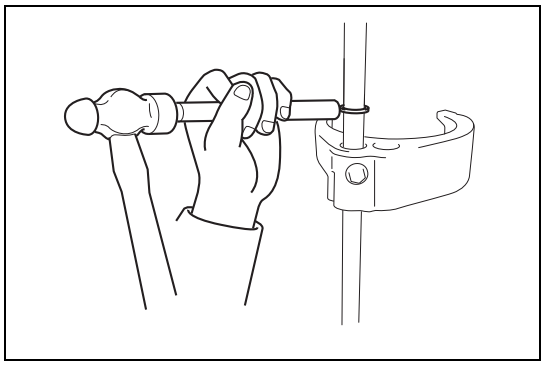

   (2) Install a new shaft snap ring.

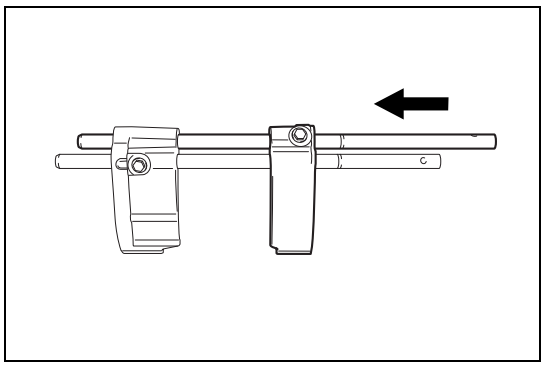

   (3) Install the gear shift fork shaft No.1 and the gear shift fork No.1 as a unit to the gear shift fork shaft No.3 and the gear shift fork No.3.

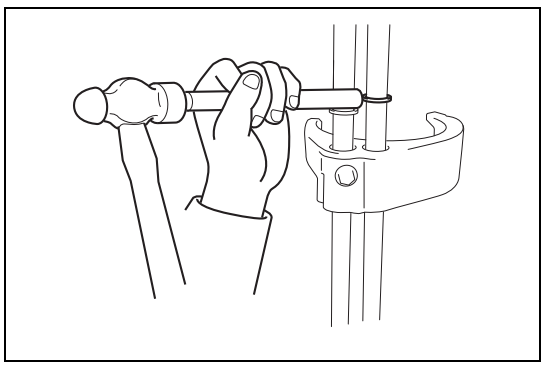

   (4) Install a new shaft snap ring.

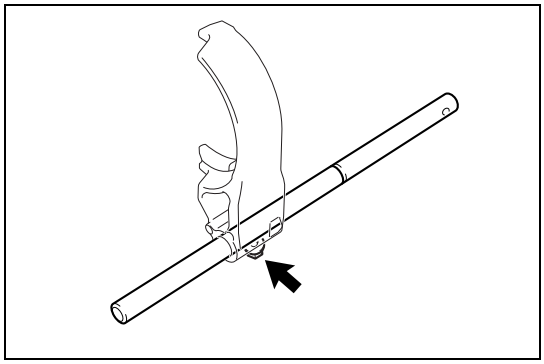

3. Installation of gear shift fork shaft No.2
   (1) Install the gear shift fork shaft No.2 to the gear shift fork No.2 with a new bolt.
   Standard value:T=19.5N·m {198.8kgf·cm} {14.4ft·lbf}

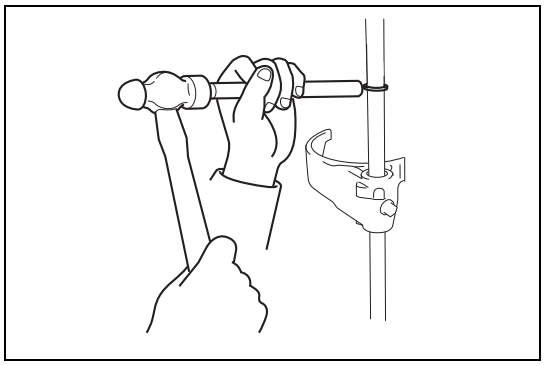

   (2) Install a new shaft snap ring.

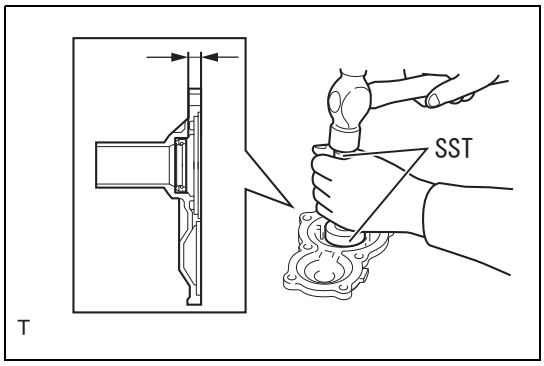

4. Installation of transmission front bearing retainer oil seal
   (1) Use the SST to install a new transmission front bearing retainer oil seal.
   SST 09950-60010 (09951-00420), 09950-70010 (09951-07100)
   Standard value: 11.1 to 11.9 mm {0.437 to 0.469 in} (from end face of bearing retainer FR)
   CAUTION:
   - Do not damage the lip of the transmission front bearing retainer oil seal.
   - Do not damage the bearing retainer FR.
   (2) Apply manual transmission oil to the lip of the transmission front bearing retainer oil seal.
   NOTE:
   Be sure to use the recommended product or the substitute product for manual transmission oil. (Refer to MT - 4)

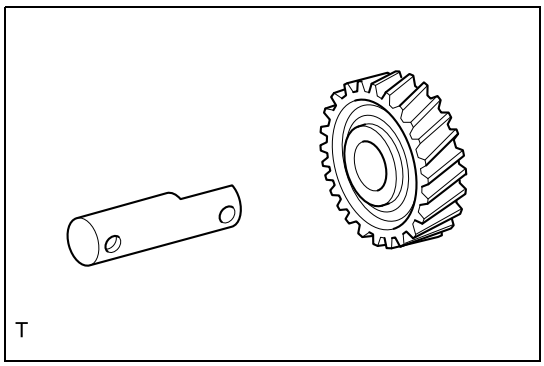

5. Installation of reverse idler gear shaft
   (1) Apply manual transmission oil to the reverse idler gear shaft and install the reverse idler gear shaft to the reverse idler gear.
   NOTE:
   Be sure to use the recommended product or the substitute product for manual transmission oil. (Refer to MT - 4)

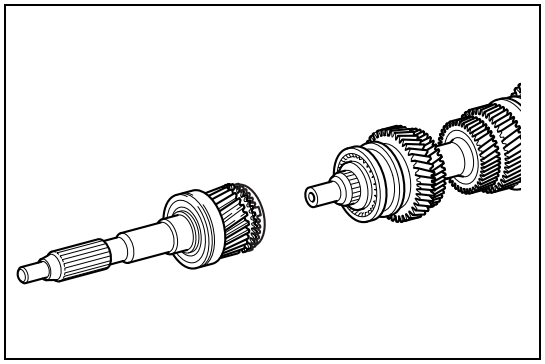

6. Installation of input shaft
   (1) Apply manual transmission oil to the needle roller bearing of the input shaft, and install the input shaft to the output shaft.
   NOTE:
   Be sure to use the recommended product or the substitute product for manual transmission oil. (Refer to MT - 4)

7. Installation of counter shaft
   (1) Install the input shaft, output shaft, counter shaft, reverse idler gear, reverse idler gear shaft, gear shift fork shaft No.1, gear shift fork shaft No.2, and gear shift fork shaft No.3 as a unit to the clutch housing.

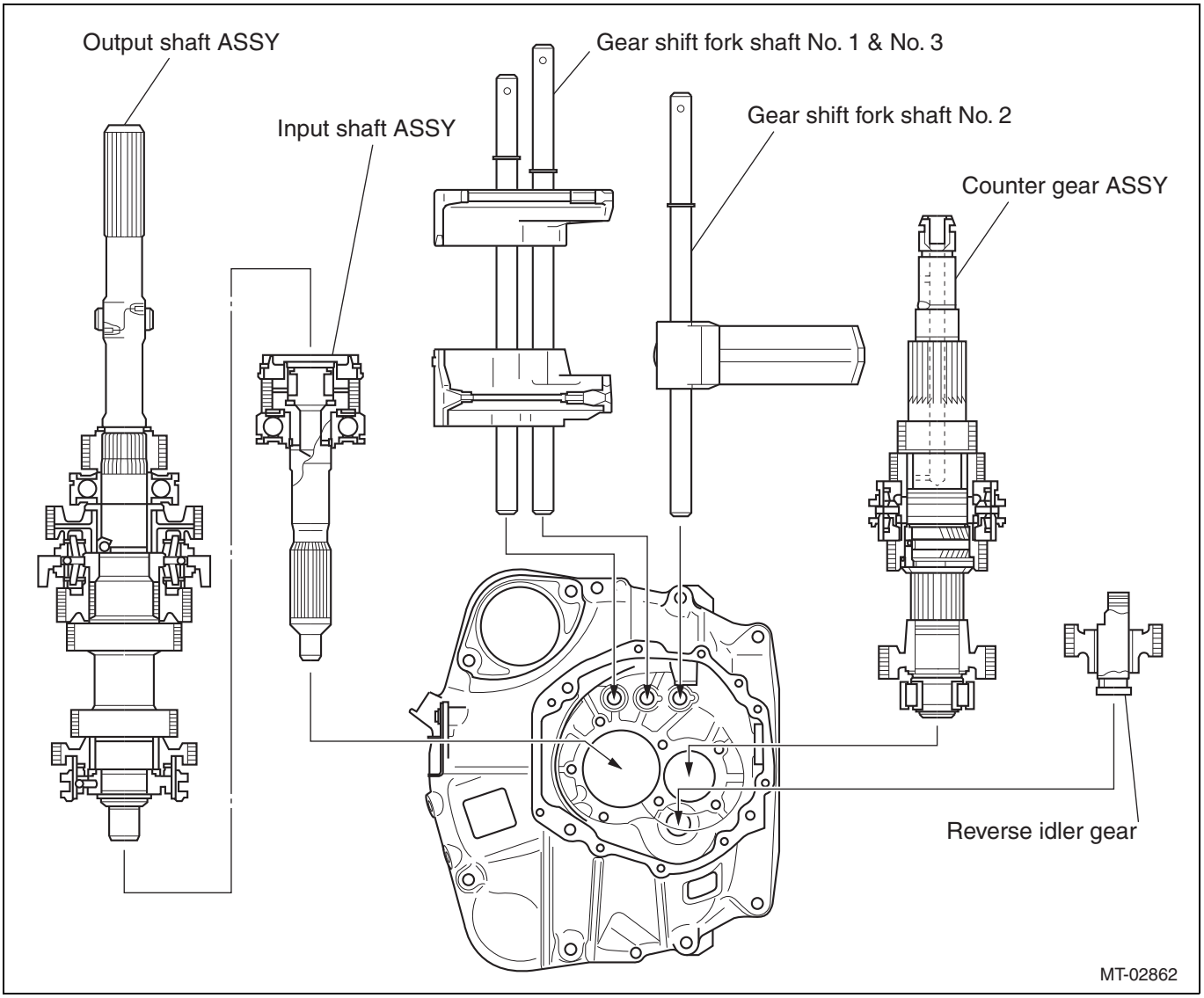

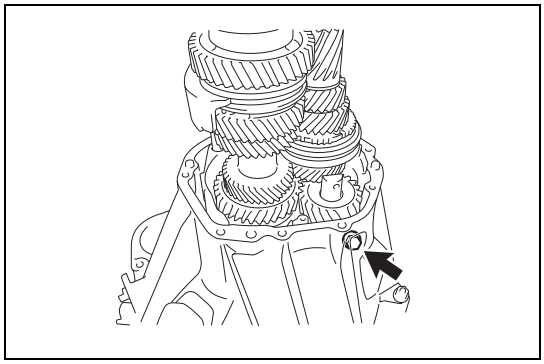

(2) Temporarily tighten the reverse idler gear shaft with a new bolt via a new gasket. (Clutch housing side)

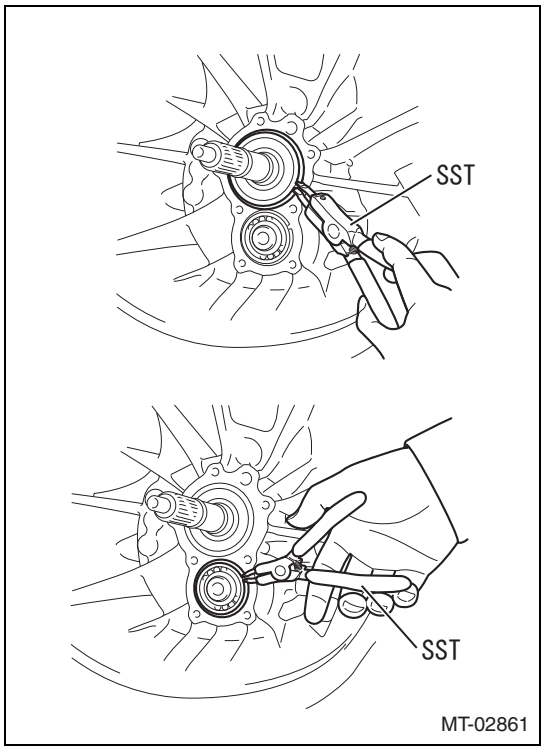

(3) Use the SST to install 2 new shaft snap rings.
SST 499895400
NOTE:
Install the shaft snap rings on the input shaft side and the counter shaft side.

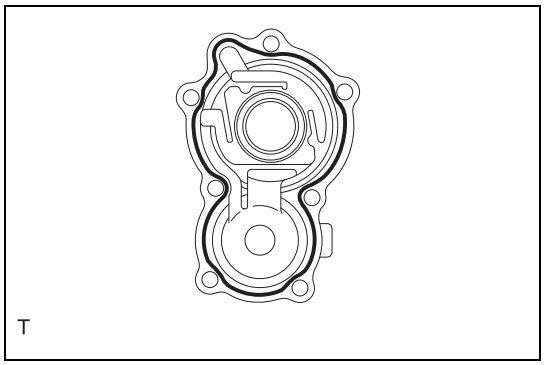

8. Installation of bearing retainer FR
(1) Apply Three Bond 1281 or equivalent continuously like beads to the position of the bearing retainer FR shown in the figure.

Captions in illustration

■	Three Bond 1281 or equivalent

CAUTION:
Install within 10 minutes after applying seal gasket.

MT

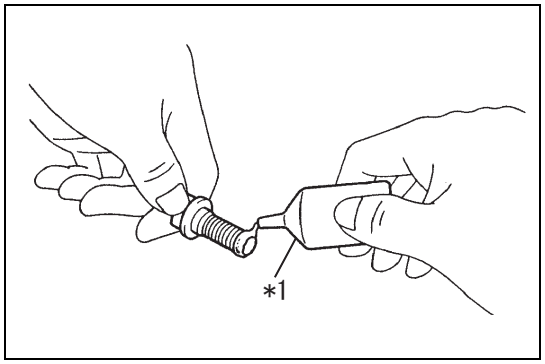

(2) Apply Adhesive 1344 or equivalent to the 2 to 3 pitches from the tip of a new bolt.

Captions in illustration

*1	Adhesive 1344 or equivalent

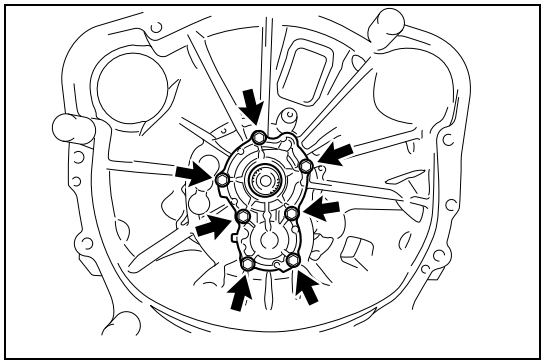

(3) Install the bearing retainer FR with the 7 bolts.
Standard value:T=17N·m {173kgf·cm} {12.5ft·lbf}
CAUTION:
Do not damage the lip of the bearing retainer FR oil seal.

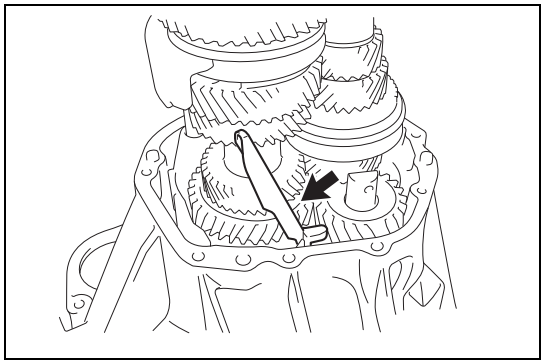

9. Installation of oil receiver pipe
(1) Install the oil receiver pipe.
CAUTION:
Check that the tip of the oil receiver pipe is not lifted or disconnected.

MT

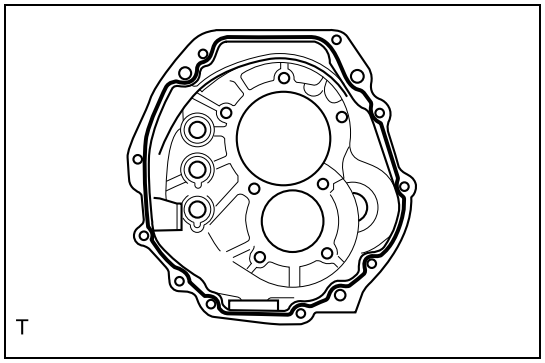

10. Installation of transmission case
(1) Apply Three Bond 1281 or equivalent continuously like beads to the position of the transmission case shown in the figure.

Captions in illustration

■	Three Bond 1281 or equivalent

CAUTION:
Install within 10 minutes after applying seal gasket.

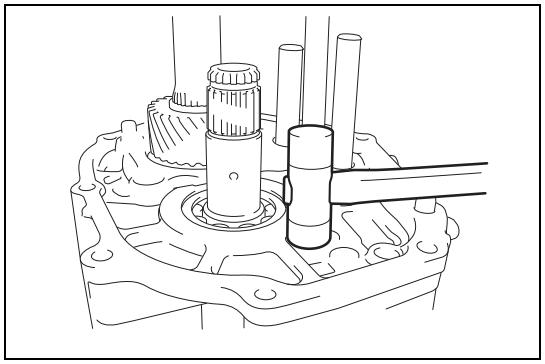

(2) Check the position of the knock pin and install the transmission case.

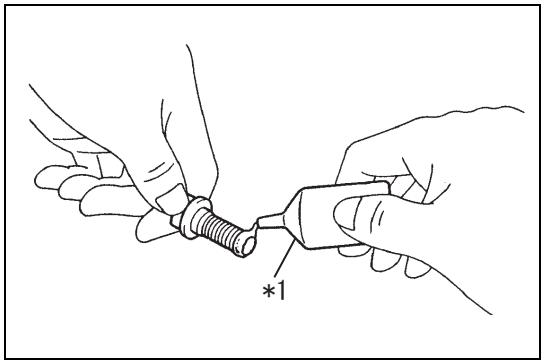

(3) Apply Adhesive 1324 or equivalent to the 2 to 3 pitches from the tip of a new bolt.

Captions in illustration

*1	Adhesive 1324 or equivalent

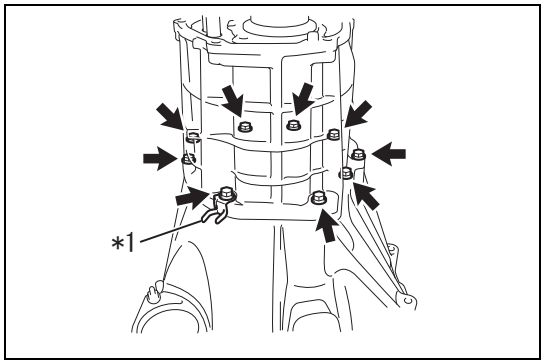

(4) Install the transmission case and clamp with the 9 bolts.

Captions in illustration

*1	Clamp

Standard value:T=29N·m {296kgf·cm} {21.4ft·lbf}

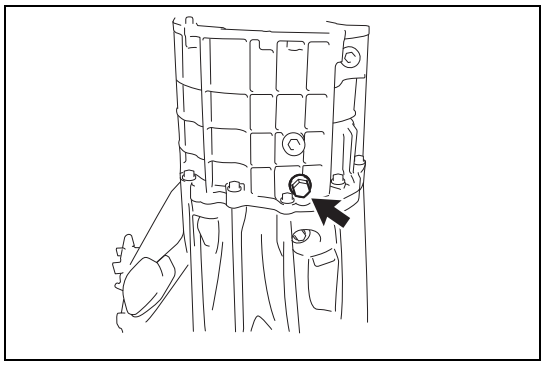

(5) Install a new reverse idler gear shaft fixing bolt via a new gasket. (Transmission case side)
Standard value:T=28N·m {286kgf·cm} {20.7ft·lbf}

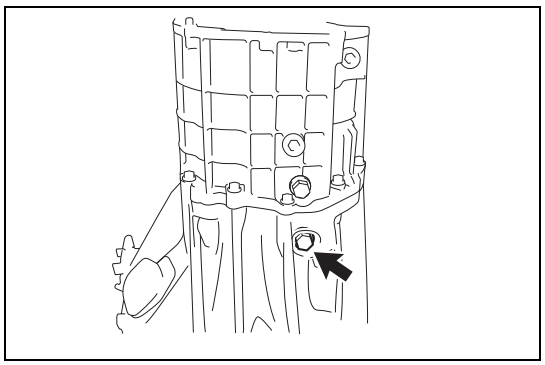

(6) Tighten the reverse idler gear shaft fixing bolt. (Clutch housing side)
Standard value:T=28N·m {286kgf·cm} {20.7ft·lbf}

MT

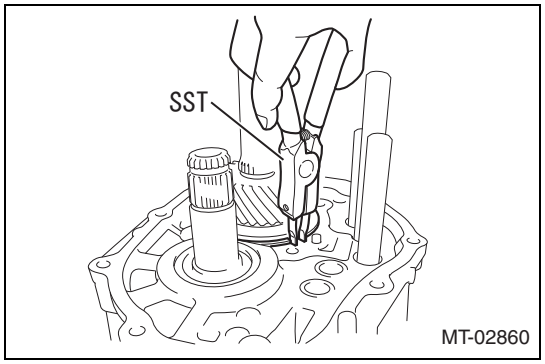

(7) Use the SST to install a new shaft snap ring.
SST 499895400

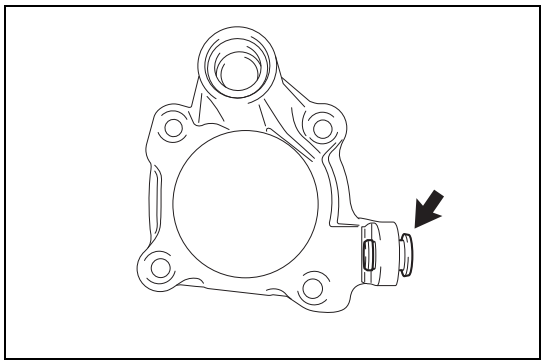

11. Installation of bearing retainer RR
(1) Install the shift arm pivot to the bearing retainer RR.

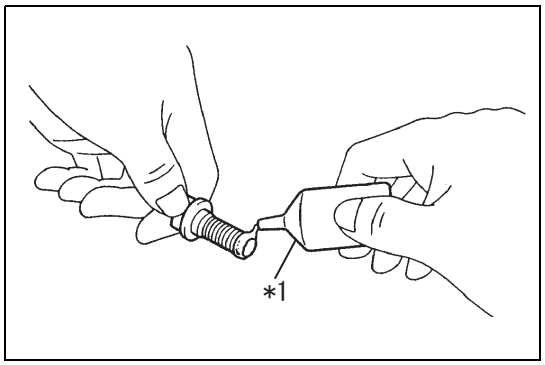

(2) Apply Adhesive 1324 or equivalent to the 2 to 3 pitches from the tip of a new bolt.

Captions in illustration

*1	Adhesive 1324 or equivalent

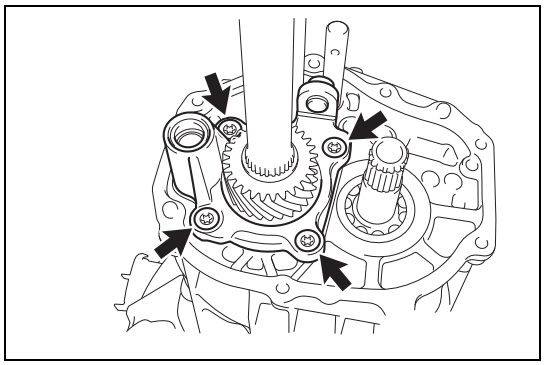

(3) Install the bearing retainer RR with 4 TORX bolts.
Standard value:T=30N·m {306kgf·cm} {22.1ft·lbf}

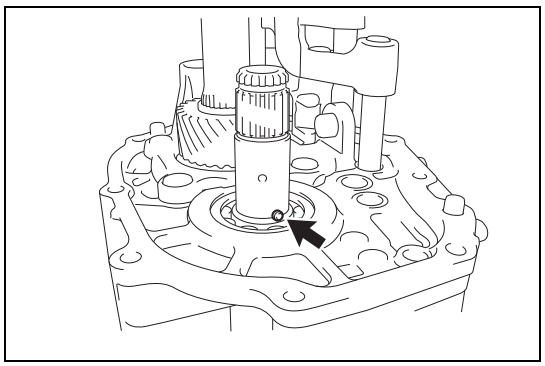

12. Installation of 6th gear thrust washer
(1) Install the straight pin to the counter shaft.

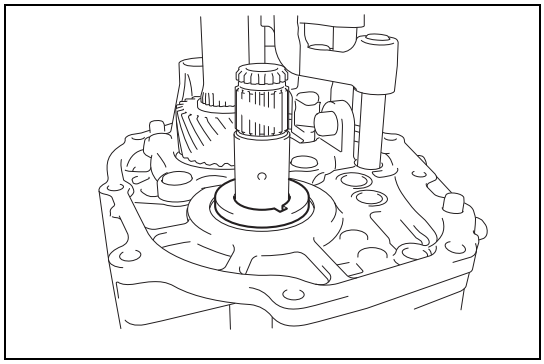

(2) Apply manual transmission oil to the 6th gear thrust washer, and install the 6th gear thrust washer to the counter shaft.
NOTE:
Be sure to use the recommended product or the substitute product for manual transmission oil. (Refer to MT - 4)

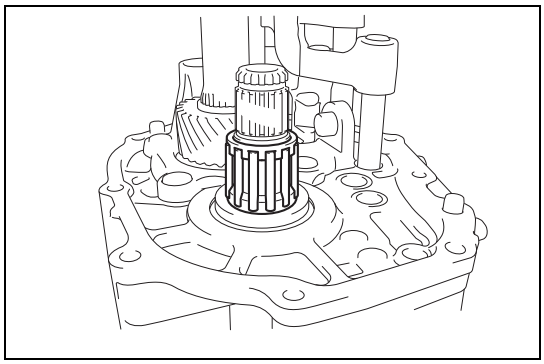

13. Installation of needle roller bearing
(1) Apply manual transmission oil to the needle roller bearing and install the needle roller bearing to the counter shaft.
NOTE:
Be sure to use the recommended product or the substitute product for manual transmission oil. (Refer to MT - 4)

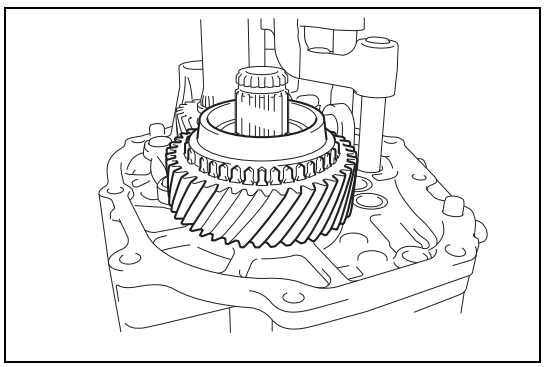

14. Installation of counter shaft 6th gear
(1) Apply manual transmission oil to the counter shaft 6th gear, and install the counter shaft 6th gear to the counter shaft.
NOTE:
Be sure to use the recommended product or the substitute product for manual transmission oil. (Refer to MT - 4)

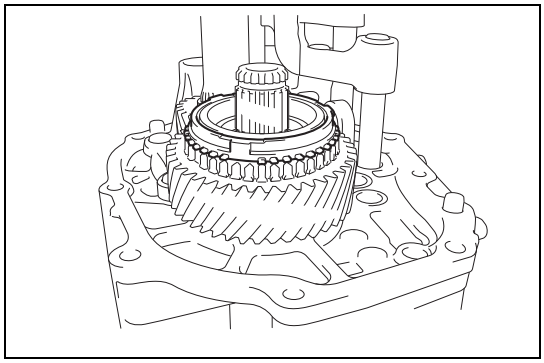

15. Installation of synchronizer ring No.2
(1) Apply manual transmission oil to the synchronizer ring No.2, and install the synchronizer ring No.2 to the counter shaft.
NOTE:
Be sure to use the recommended product or the substitute product for manual transmission oil. (Refer to MT - 4)

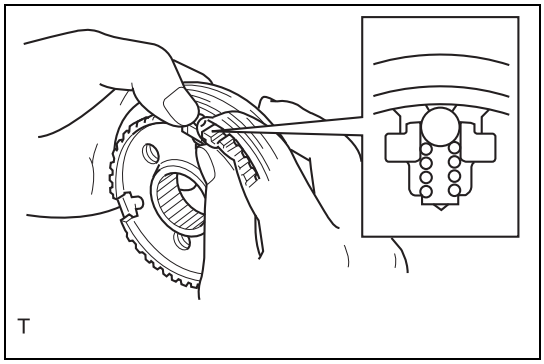

16. Installation of transmission hub sleeve No.4
(1) Apply manual transmission oil to the sliding area of the transmission clutch hub No.4.
NOTE:
Be sure to use the recommended product or the substitute product for manual transmission oil. (Refer to MT - 4)
(2) Install the transmission hub sleeve No.4 to the transmission clutch hub No.4, and install the 3 balls after installing the 3 synchromesh shifting keys No.1 and the 3 synchromesh shifting key springs No.1 as a unit.

NOTE:
- Install the balls while pressing the synchromesh shifting key spring No.1.
- After the installation, settle the synchromesh shifting key spring No.1.

(3) Install a new hole snap ring.

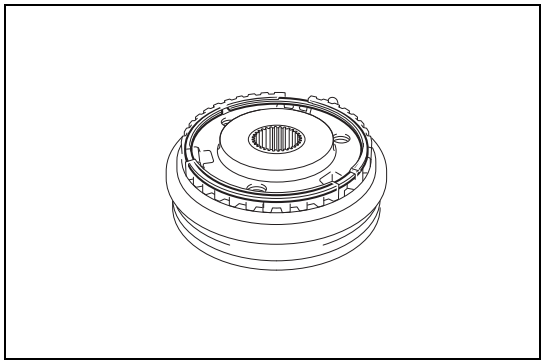

17. Installation of transmission clutch hub No.4
    (1) Use the SST to install the transmission clutch hub No.4, transmission hub sleeve No.4, and gear shift fork No.4 as a unit.
    SST 18682AA000

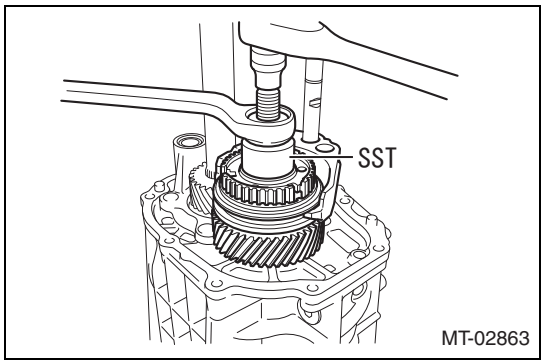

18. Installation of shaft snap ring
    (1) Select a shaft snap ring so that the thrust clearance between the transmission clutch hub No.4 and the snap ring is within the standard value.
    Standard value: 0 to 0.1 mm {0 to 0.00394 in}
    NOTE:
    Select a shaft snap ring with the maximum thickness that can be installed.

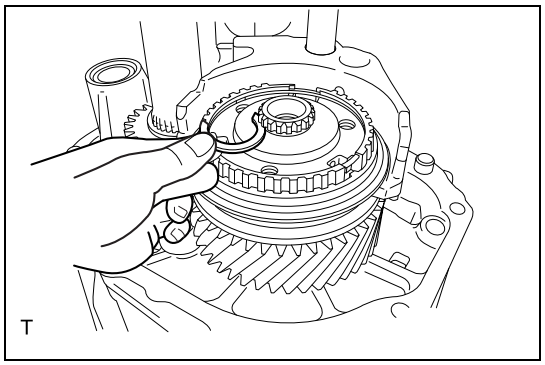

Shaft snap ring type

Item number	Thickness mm {in}	Identification
17005AA230	2.8 {0.110}	A
17005AA240	2.85 {0.11220}	B
17005AA250	2.90 {0.11417}	C
17005AA260	2.95 {0.11614}	D
17005AA270	3.00 {0.11811}	E
17005AA280	3.05 {0.12007}	F

(2) Install a new shaft snap ring to the counter shaft.

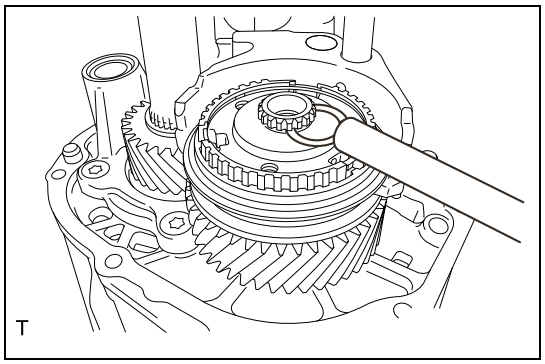

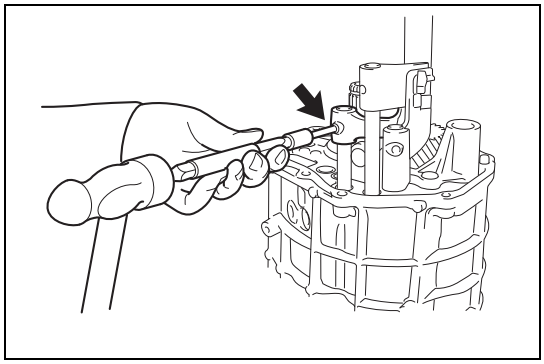

19. Installation of gear shift head No.2
    (1) Install the gear shift head No.2 to the gear shift fork shaft No.2.
    (2) Install a new slotted spring pin to the gear shift fork shaft No.2.
    CAUTION:
    Do not drive in the pin excessively.
    Standard value: 0 mm {0 in} (from end face of gear shift head No.2)

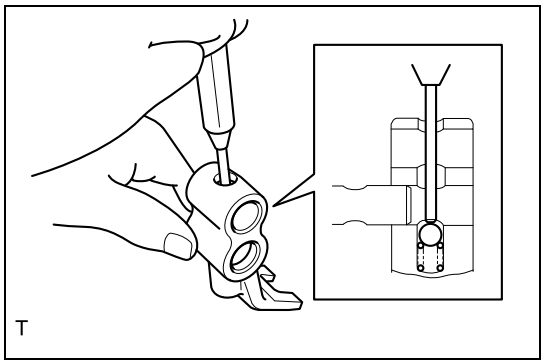

20. Installation of 5th shift head
    (1) Install the compression spring to the 5th shift head, and install the 5th shift head to the gear shift fork shaft No.3 while pressing the ball with the pin punch 5.

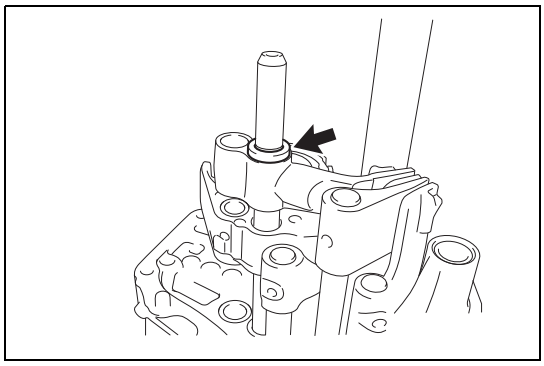

    (2) Install the washer.

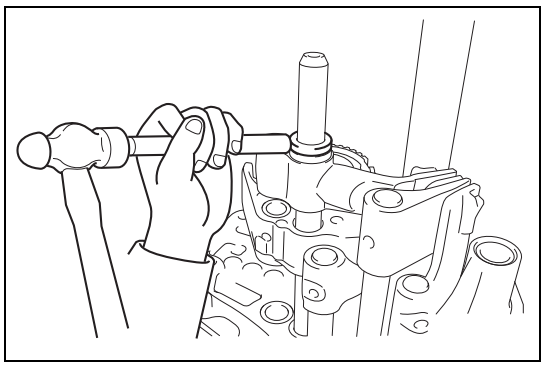

    (3) Install a new shaft snap ring to the gear shift fork shaft No.3.

MT

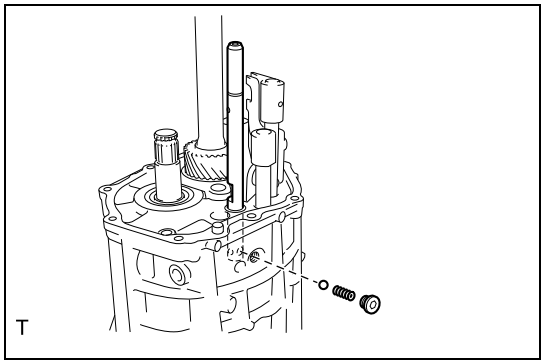

21. Installation of gear shift fork shaft No.3
    (1) Insert the gear shift fork shaft No.3 in the direction shown in the figure, install the ball and the compression spring, and tighten a new head straight screw plug.
    Standard value:T=19N·m {194kgf·cm} {14.0ft·lbf}

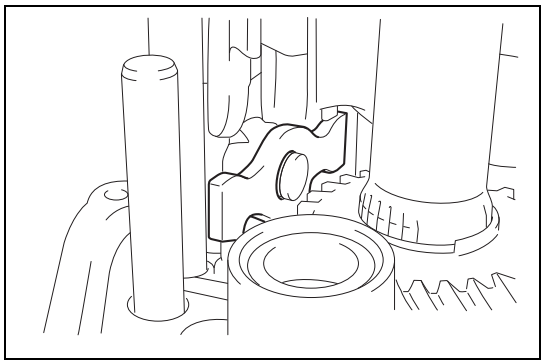

22. Installation of shift arm
    (1) Install the shift arm to the shift arm pivot.

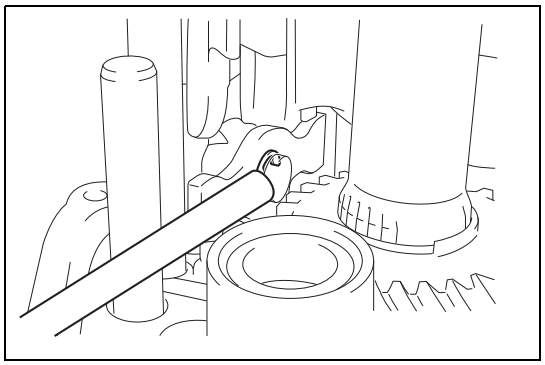

    (2) Install a new E-ring to the shift arm pivot.

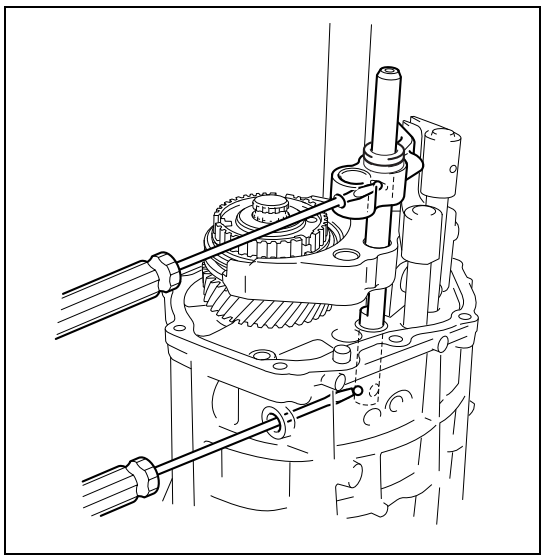

23. Installation of gear shift fork shaft No.2
    (1) Install 2 balls to the gear shift fork shaft No.3.

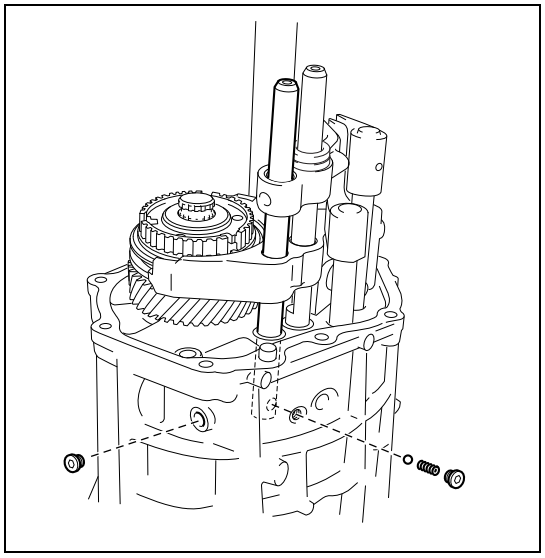

(2) Insert the gear shift fork shaft No.2 in the direction shown in the figure, install the ball and the compression spring, and tighten 2 new head straight screw plugs.
Standard value:T=19N·m {194kgf·cm} {14.0ft·lbf}

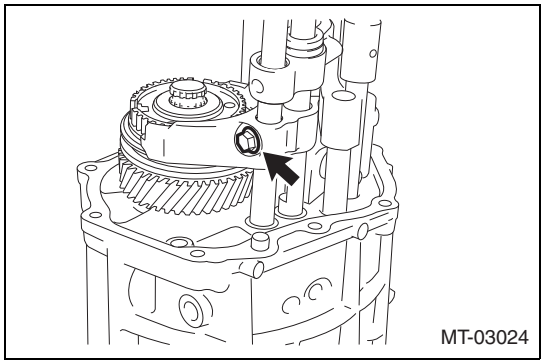

(3) Install a new bolt to the gear shift fork shaft No. 2.
Standard value:T=19.5N·m {198.8kgf·cm} {14.4ft·lbf}

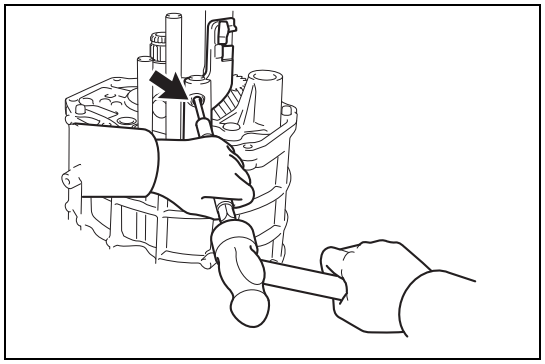

24. Installation of gear shift head No.3
(1) Install the gear shift head No.3 to the gear shift fork shaft No.3.
NOTE:
Install while rotating the gear shift head No.3 so as to insert the shift arm in the groove of the gear shift head No.3.
(2) Install a new slotted spring pin to the gear shift fork shaft No.3.
CAUTION:
Do not drive in the pin excessively.
Standard value: 0 mm {0 in} (from end face of gear shift head No.3)

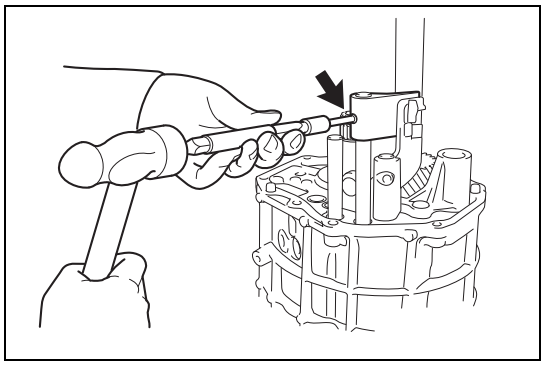

25. Installation of gear shift head No.1
(1) Install the gear shift head No.1 to the gear shift fork shaft No.1.
(2) Install a new slotted spring pin to the gear shift fork shaft No.1.
CAUTION:
Do not drive in the pin excessively.
Standard value: 0 mm {0 in} (from end face of gear shift head No.1)

MT

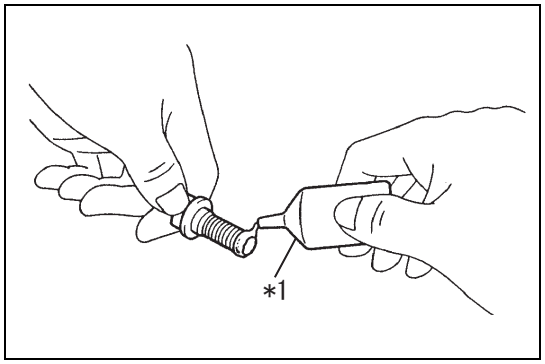

26. Installation of shift inner lever FR
    (1) Apply Adhesive 1324 or equivalent to the 2 to 3 pitches from the tip of a new bolt.

Captions in illustration

*1	Adhesive 1324 or equivalent

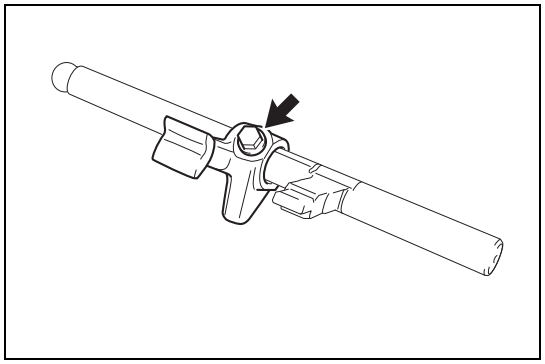

    (2) Install the shift inner lever FR to the shift shaft with a new bolt.
    Standard value:T=33.3N·m {339.5kgf·cm} {24.6ft·lbf}

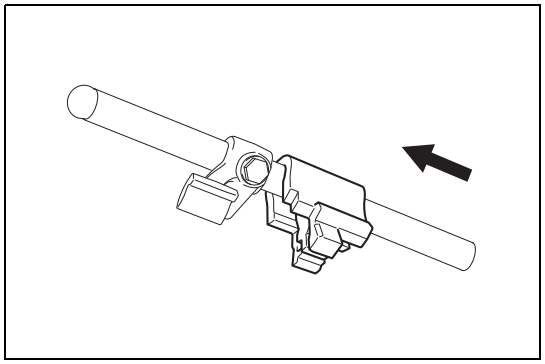

27. Installation of shift inner lock block No.1
    (1) Install the shift inner lock block No.1 to the shift shaft.

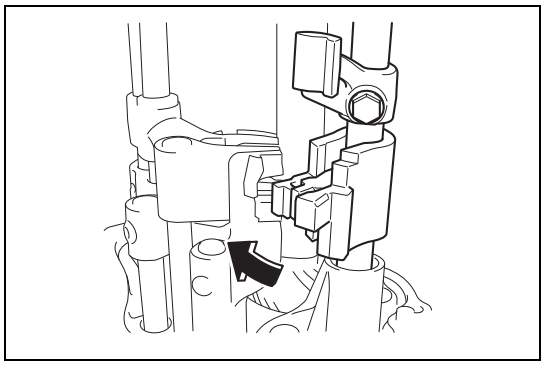

28. Installation of shift shaft
    (1) Slide and install the shift shaft and the shift inner lock block No.1.

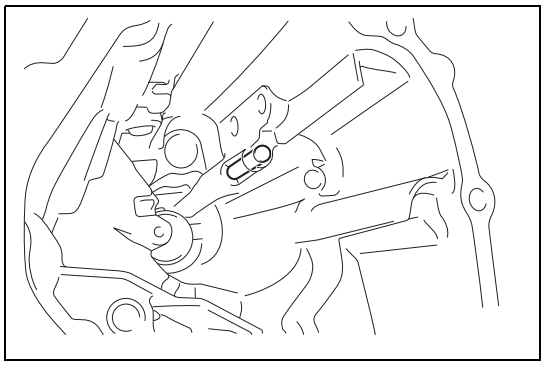

29. Installation of extension housing oil receiver pipe No.1
    (1) Install the straight pin.

MT

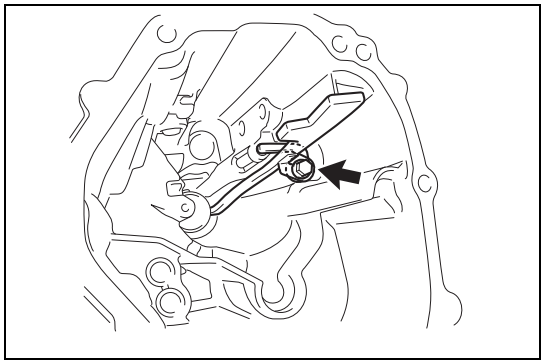

(2) Install the extension housing oil receiver pipe No.1 and the stopper plate with a new bolt.
Standard value:T=8.5N·m {87kgf·cm} {6.3ft·lbf}
NOTE:
Make sure the end of the oil receiver pipe No.1 is inserted in the groove.

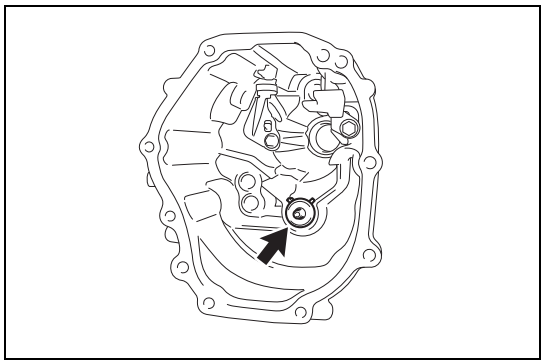

30. Installation of extension housing oil receiver pipe No.2
(1) Install the extension housing oil receiver pipe No.2.

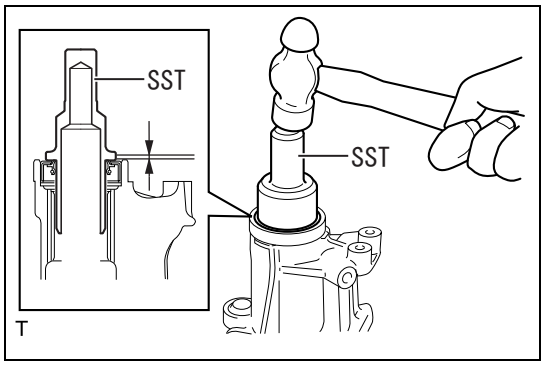

31. Installation of transmission extension housing oil seal
(1) Apply manual transmission oil to the lip of a new transmission extension housing oil seal.
NOTE:
Be sure to use the recommended product or the substitute product for manual transmission oil. (Refer to MT - 4)
(2) Use the SST to install a new transmission extension housing oil seal.
SST 09325-20010
Standard value: 0.1 to 1.1 mm {0.00394 to 0.0433} (from end face of transmission extension housing SUB-ASSY (MTM))
CAUTION:
Do not damage the lip of the transmission extension housing oil seal.

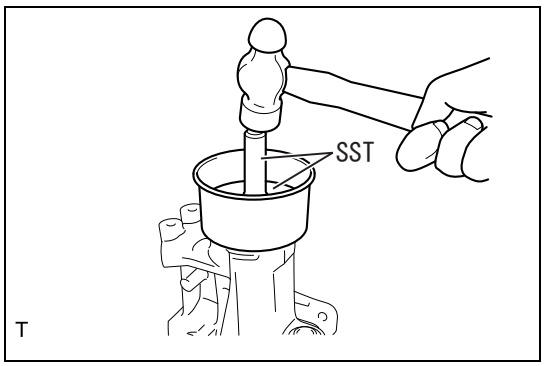

32. Installation of extension housing dust deflector
(1) Use the SST to install a new extension housing dust deflector.
SST 09950-60020 (09951-00750), 09950-70010 (09951-07100)
NOTE:
Drive in the deflector until it contacts the transmission extension housing SUB-ASSY (MTM).

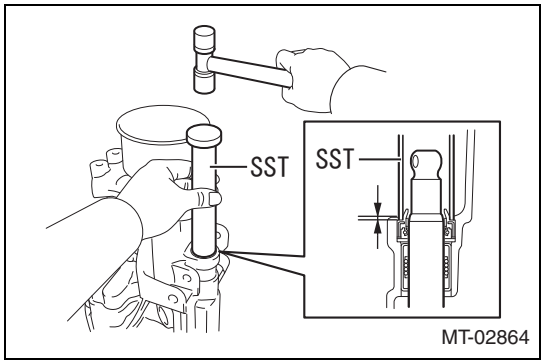

33. Installation of extension housing rear oil seal
    (1) Use the SST to install a new extension housing rear oil seal.
    SST 18657AA040
    Standard value: 1.0 to 2.0 mm {0.0394 to 0.0787 in} (from end face of transmission extension housing SUB-ASSY (MTM))
    CAUTION:
    Do not damage the lip of the extension housing rear oil seal.
    (2) Apply manual transmission oil to the lip of the extension housing rear oil seal.
    NOTE:
    Be sure to use the recommended product or the substitute product for manual transmission oil. (Refer to MT - 4)

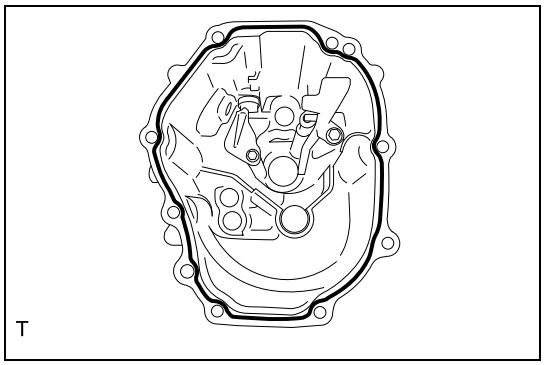

34. Installation of transmission extension housing SUB-ASSY (MTM)
    (1) Apply Three Bond 1281 continuously like beads to the position of the transmission extension housing SUB-ASSY (MTM) shown in the figure.

Captions in illustration

■	Three Bond 1281 or equivalent

CAUTION:
- Install within 10 minutes after applying seal gasket.
- Be sure to install the transmission extension housing SUB-ASSY (MTM) with the shift position in neutral status.

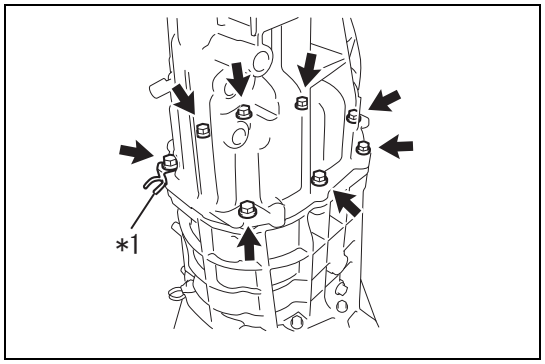

    (2) Install the transmission extension housing SUB-ASSY (MTM) and the clamp with the 8 new bolts.

Captions in illustration

*1	Clamp

Standard value:T=29N·m {296kgf·cm} {21.4ft·lbf}
CAUTION:
Align the knock pin into the knock pin hole correctly.

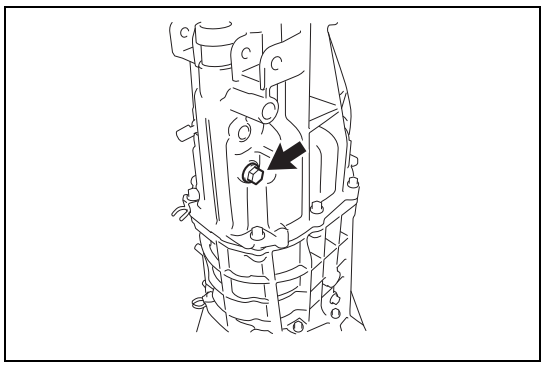

    (3) Install a new bolt.
    Standard value:T=31N·m {316kgf·cm} {22.9ft·lbf}

MT

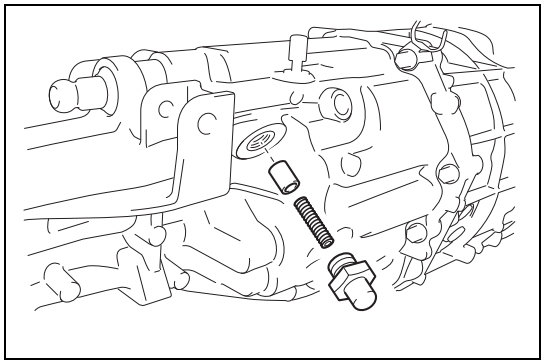

35. Holder installation
    (1) Install a new holder, compression spring, and lock ball pin.
    Standard value:T=39.2N·m {399.7kgf·cm} {28.9ft·lbf}

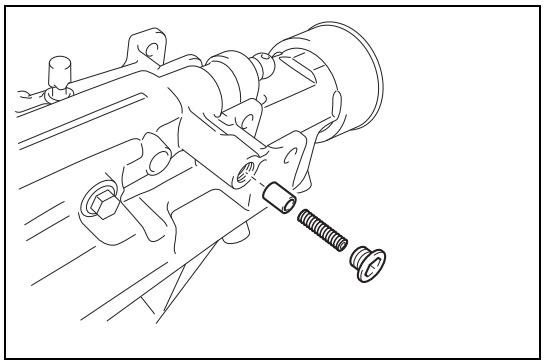

36. Installation of lock ball pin
    (1) Install a new head straight screw plug, compression spring, and lock ball pin.
    Standard value:T=24.5N·m {249.8kgf·cm} {18.1ft·lbf}

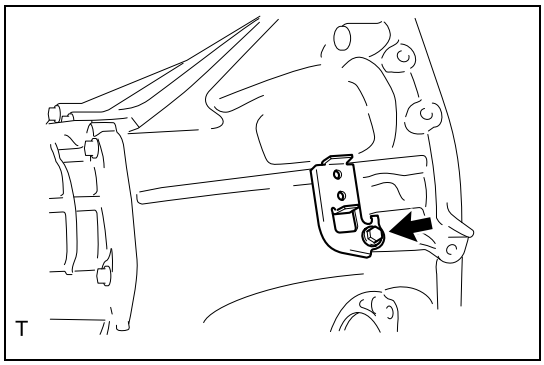

37. Installation of wiring harness clamp bracket
    (1) Install the wiring harness clamp bracket with a new bolt.
    Standard value:T=7.0N·m {71kgf·cm} {5.2ft·lbf}

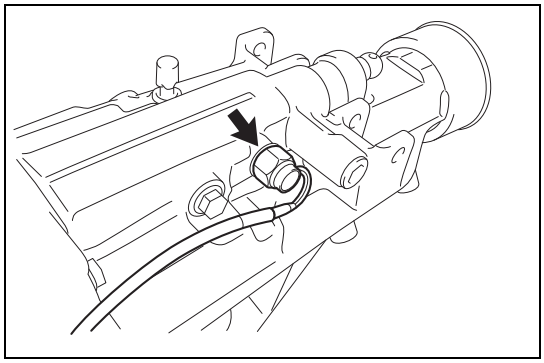

38. Installation of neutral switch
    (1) Install the neutral switch and a new gasket.
    Standard value:T=32.3N·m {329.4kgf·cm} {23.8ft·lbf}
    CAUTION:
    When tightening by combining a torque wrench and union nut wrench to extend the whole length, the actual torque will be excessive if tightened until the reading of the torque wrench reaches the specified tightening torque. (Refer to IN - 6)

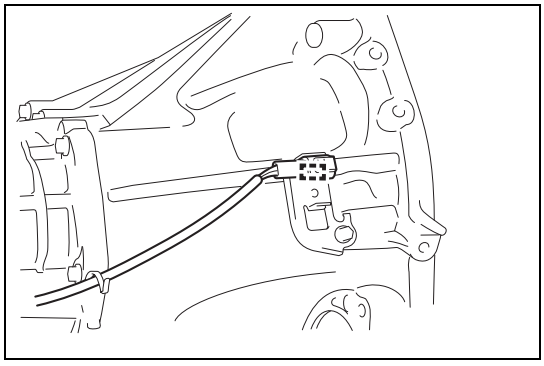

    (2) Engage the clamp to connect the neutral switch wire.

MT

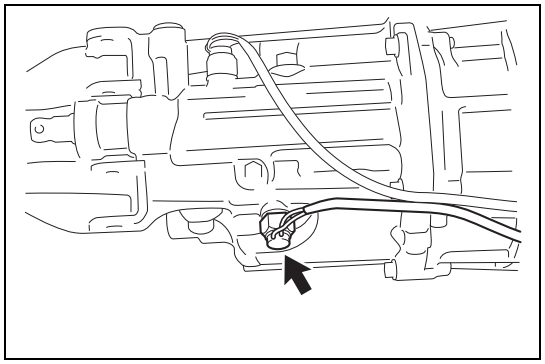

39. Installation of back-up light switch ASSY
    (1) Install the back-up light switch ASSY and a new gasket.
    Standard value:T=32.3N·m {329.4kgf·cm} {23.8ft·lbf}
    CAUTION:
    When tightening by combining a torque wrench and union nut wrench to extend the whole length, the actual torque will be excessive if tightened until the reading of the torque wrench reaches the specified tightening torque. (Refer to IN - 6)

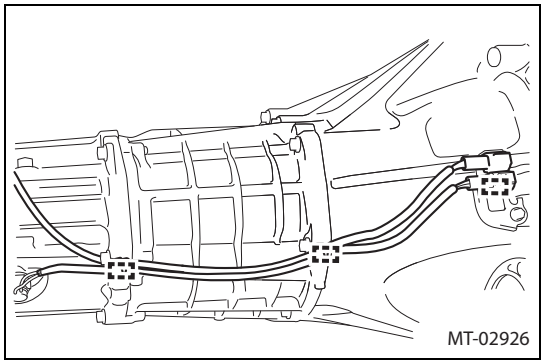

    (2) Engage all of the 3 clamps from the rear side with a slack of the harness positioned only at the forward end, and connect the back-up light switch ASSY wire and the neutral switch wire.

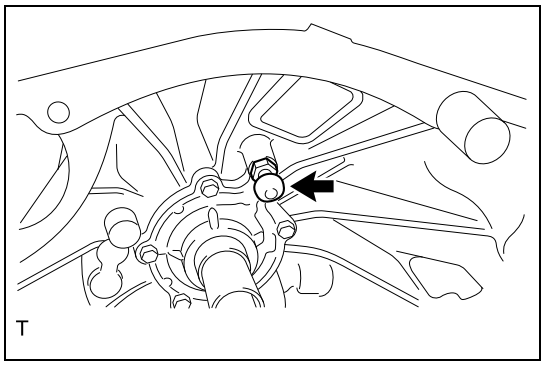

40. Installation of clutch release fork support
    (1) Install the clutch release fork support to the clutch housing.
    Standard value:T=16N·m {163kgf·cm} {11.8ft·lbf}

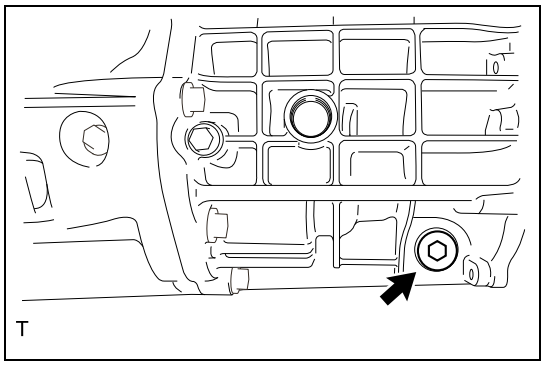

41. Installation of manual transmission drain plug
    (1) Install the manual transmission drain plug to the transmission case via a new gasket.
    Standard value:T=37N·m {377kgf·cm} {27.3ft·lbf}

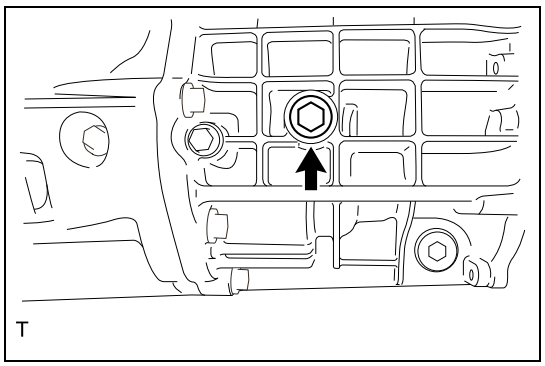

42. Installation of manual transmission filler plug
    (1) Install the manual transmission filler plug to the transmission case via a new gasket.
    Standard value:T=37N·m {377kgf·cm} {27.3ft·lbf}

MT

Input shaft ASSY

Exploded view

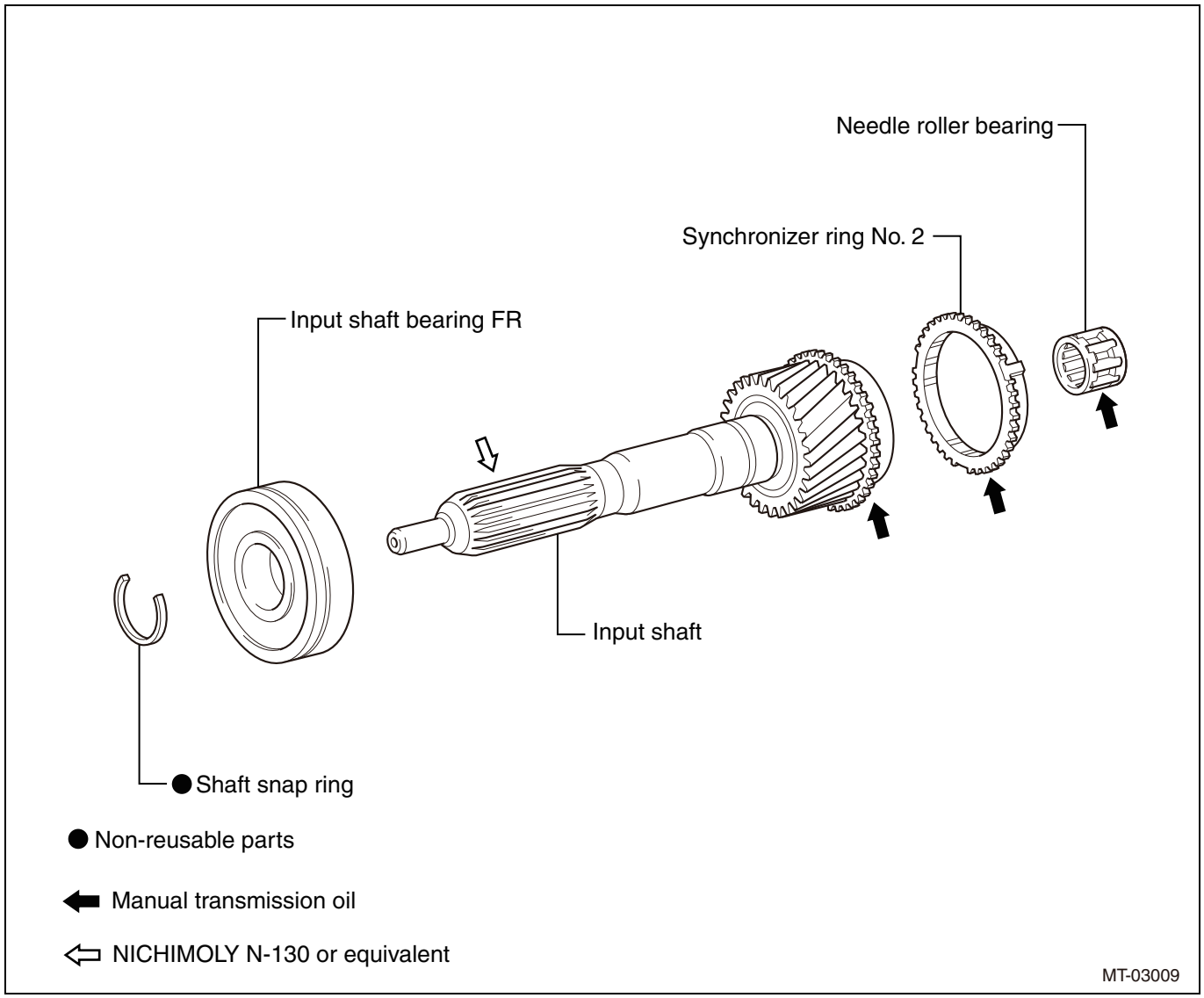

NOTE:
Be sure to use the recommended product or the substitute product for manual transmission oil. (Refer to MT - 4)

Disassembly

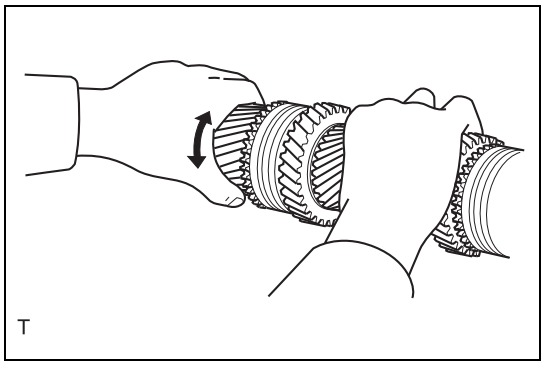

1. Check of needle roller bearing
   (1) Install the input shaft to the output shaft, and check the needle roller bearing.
   Criteria: There is no abnormal response, bind, noise, and play.
   NOTE:
   If defective, replace the needle roller bearing with a new one.

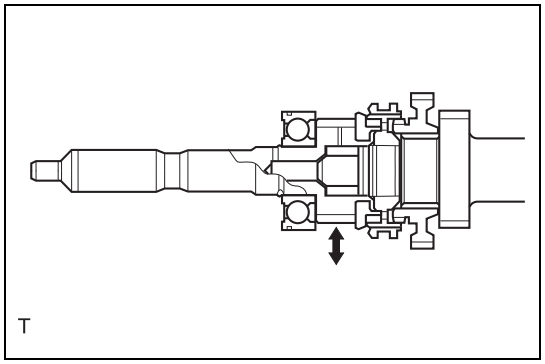

2. Radial clearance check
   (1) Install the input shaft to the output shaft, and check the radial clearance.
   Standard value: 0.029 to 0.072 mm {0.00114 to 0.00283 in}
   Limit: 0.072 mm {0.00283 in}
   NOTE:
   If the value exceeds the limit, replace the input shaft, needle roller bearing, and output shaft with new ones.

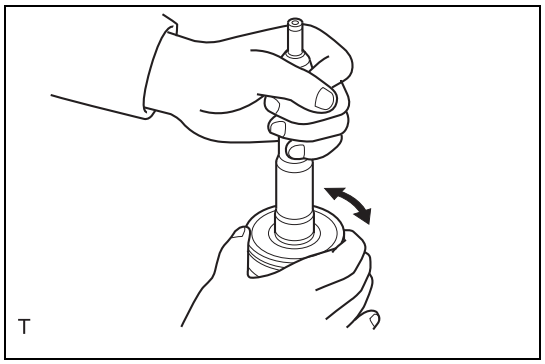

3. Check of input shaft bearing FR
   (1) Check the input shaft bearing FR.
   Criteria: There is no abnormal response, bind, noise, and play.
   NOTE:
   If defective, replace the input shaft bearing FR with a new one.

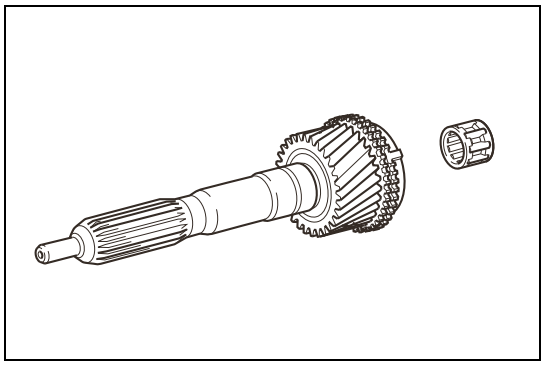

4. Removal of needle roller bearing
   (1) Remove the needle roller bearing from the input shaft.

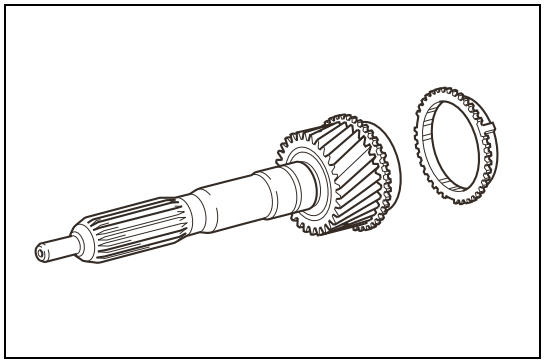

5. Removal of synchronizer ring No.2
   (1) Remove the synchronizer ring No.2 from the input shaft.

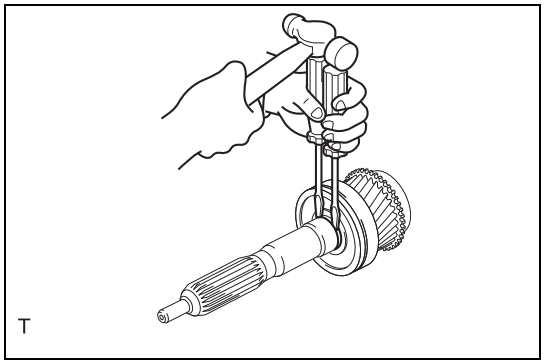

6. Removal of input shaft bearing FR
   (1) Remove the shaft snap ring from the input shaft.
   CAUTION:
   - Keep the shaft snap ring from flying out with a cloth, etc.
   - Verify the direction of the parts.

MT

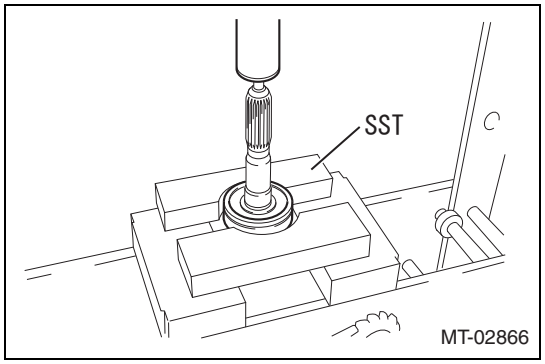

(2) Use the SST to remove the input shaft bearing FR from the input shaft.
SST 899714110
CAUTION:
Apply press pressure to the inner race of the input shaft bearing FR to remove the input shaft and the bearing FR.

Inspection

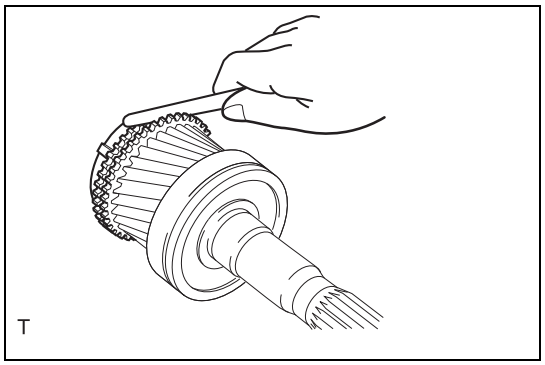

1. Check of synchronizer ring No.2
(1) Apply manual transmission oil to the cone portion of the 3rd gear, and check the clearance between the synchronizer ring No.2 and the 3rd gear while pressing the synchronizer ring No.2 by hand.
Standard value: 0.8 to 1.6 mm {0.0314 to 0.0629 in}
Limit: 0.8 mm {0.0314 in}
CAUTION:
Check the entire circumference of the gear.
NOTE:
- If the value is smaller than the limit, replace the synchronizer ring No.2 with a new one.
- Be sure to use the recommended product or the substitute product for manual transmission oil. (Refer to MT - 4)

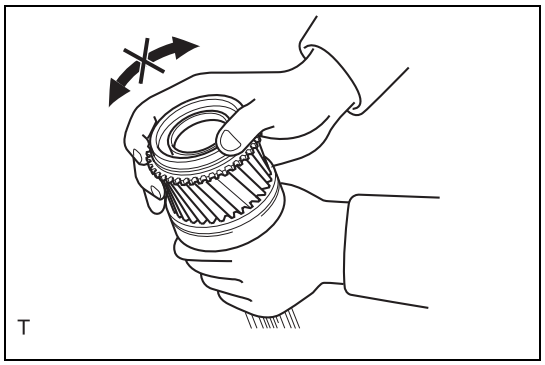

(2) Apply manual transmission oil to the cone portion of the 3rd gear, and check that the synchronizer ring No.2 does not slip in the circumferential direction while pressing it by hand.
NOTE:
- If it slips, replace the synchronizer ring No.2 with a new one.
- Be sure to use the recommended product or the substitute product for manual transmission oil. (Refer to MT - 4)

MT

Assembly

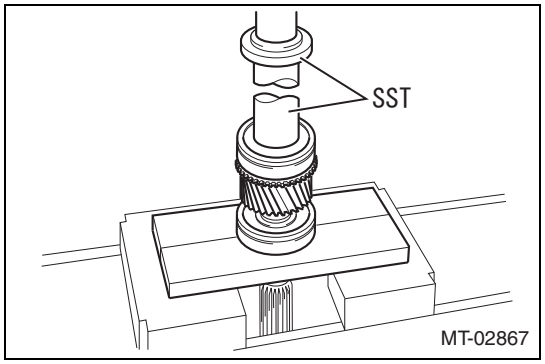

1. Installation of input shaft bearing FR
(1) Use the SST to install the input shaft bearing FR to the input shaft.
SST 499277000, 398477703
CAUTION:
Press-fit by holding the inner race of the input shaft bearing FR.

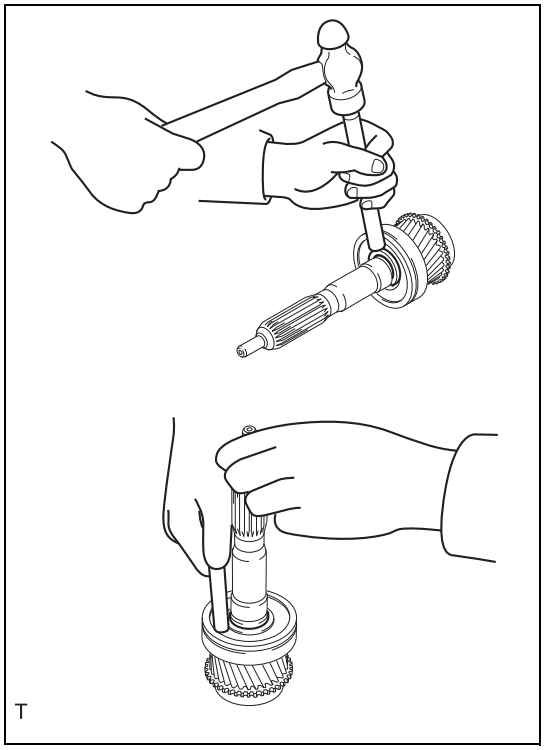

(2) Select a shaft snap ring so that the thrust clearance between the input shaft bearing FR and the shaft snap ring is within the standard value.
Standard value: 0 mm {0 in}
Limit: 0.1 mm {0.00394 in}

Shaft snap ring type

Item number	Thickness mm {in}	Identification mark
17005AA460	1.95 {0.07677}	0
17005AA470	2.00 {0.07874}	1
17005AA480	2.05 {0.08070}	2
17005AA490	2.10 {0.08267}	3
17005AA500	2.15 {0.08464}	4
17005AA510	2.20 {0.08661}	5

(3) Install a new shaft snap ring to the input shaft.

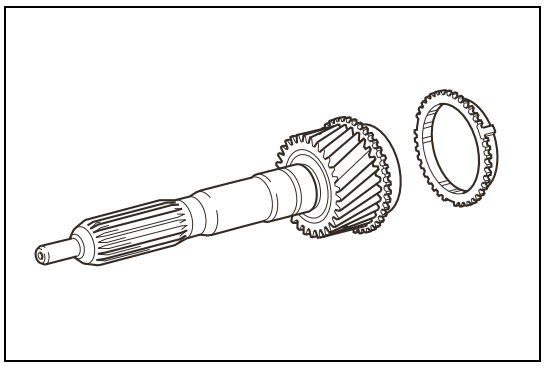

2. Installation of synchronizer ring No.2
(1) Apply manual transmission oil to the synchronizer ring No.2, and install the synchronizer ring No.2 to the input shaft.
NOTE:
Be sure to use the recommended product or the substitute product for manual transmission oil. (Refer to MT - 4)

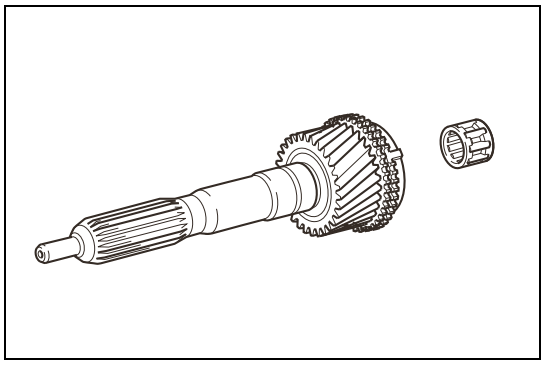

3. Installation of needle roller bearing
(1) Apply manual transmission oil to the needle roller bearing and install the needle roller bearing to the input shaft.
NOTE:
Be sure to use the recommended product or the substitute product for manual transmission oil. (Refer to MT - 4)

Output shaft ASSY

Exploded view

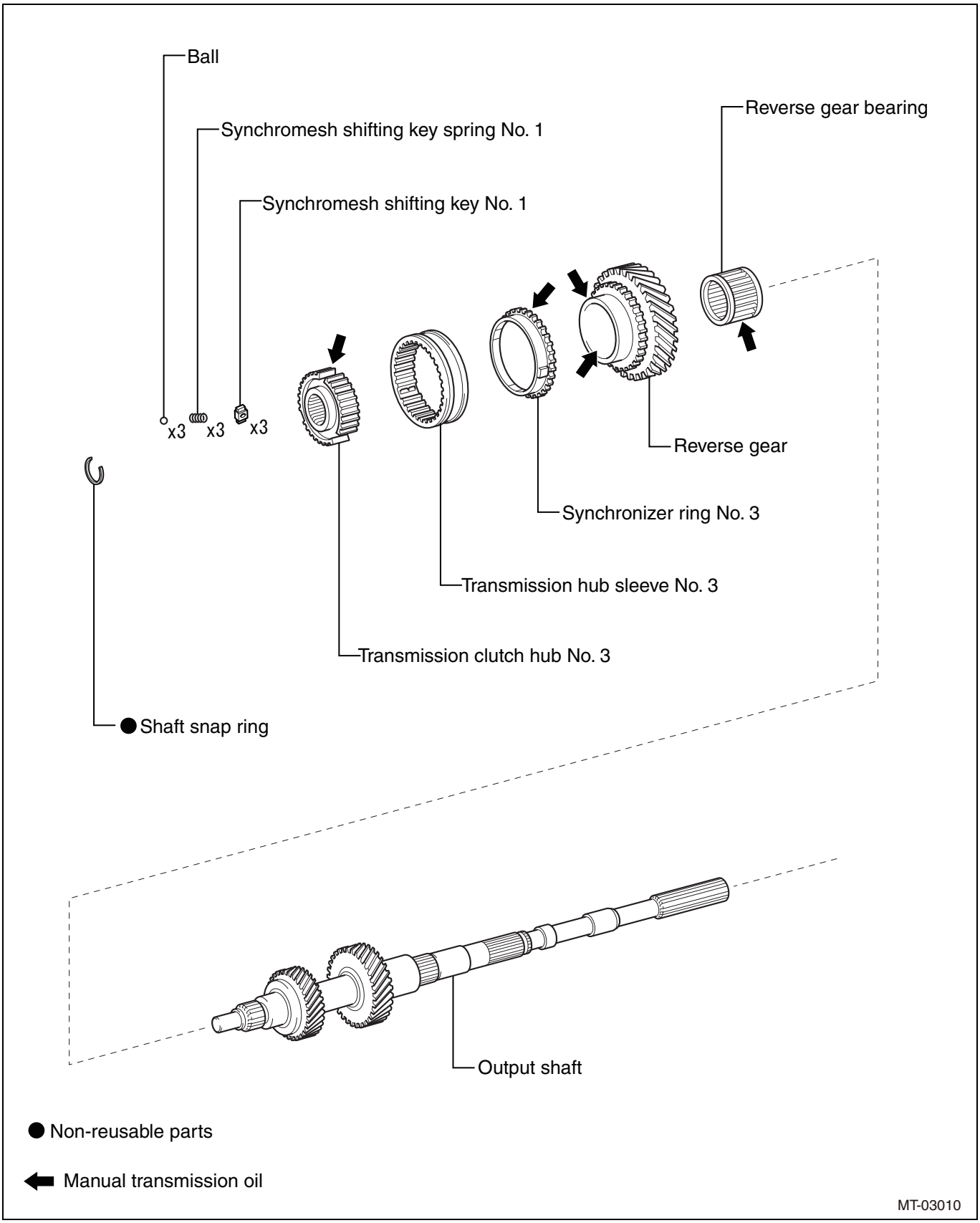

NOTE:
Be sure to use the recommended product or the substitute product for manual transmission oil. (Refer to MT - 4)

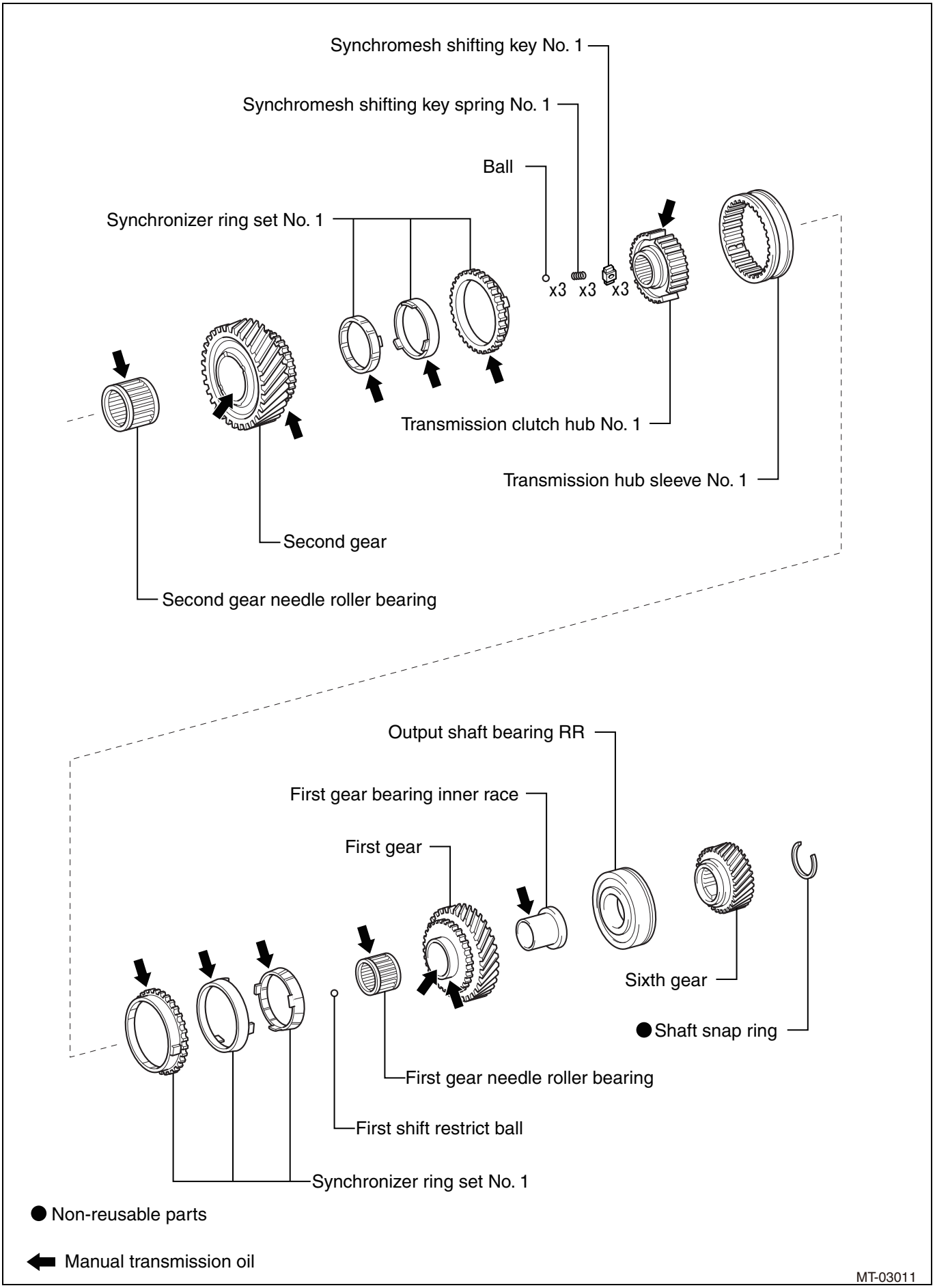
Synchromesh shifting key No. 1
Synchromesh shifting key spring No. 1
Ball
Synchronizer ring set No. 1
x3
x3
x3
Transmission clutch hub No. 1
Transmission hub sleeve No. 1
Second gear
Second gear needle roller bearing
Output shaft bearing RR
First gear bearing inner race
First gear
Sixth gear
● Shaft snap ring
First gear needle roller bearing
First shift restrict ball
Synchronizer ring set No. 1
● Non-reusable parts
Manual transmission oil
MT-03011

MT

NOTE:
Be sure to use the recommended product or the substitute product for manual transmission oil. (Refer to MT - 4)

Disassembly

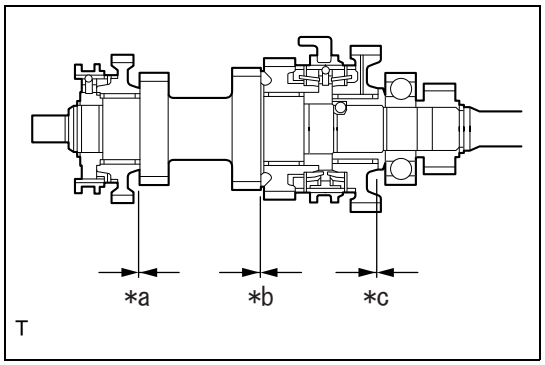

1. Thrust clearance check
   (1) Check the thrust clearances of the 1st gear, 2nd gear, and reverse gear.

Captions in illustration

*a	Reverse gear thrust clearance
*b	2nd gear thrust clearance
*c	1st gear thrust clearance

Standard value

Gear	Standard value mm {in}	Limit mm {in}
1st gear	0.15 to 0.40 {0.00590 to 0.0157}	0.40 {0.0157}
2nd gear	0.10 to 0.45 {0.000394 to 0.0177}	0.45 {0.0177}
Reverse gear	0.10 to 0.45 {0.000394 to 0.0177}	0.45 {0.0177}

NOTE:
If the value exceeds the limit, replace the corresponding gear, transmission clutch hub, needle roller bearing, and output shaft with new ones.

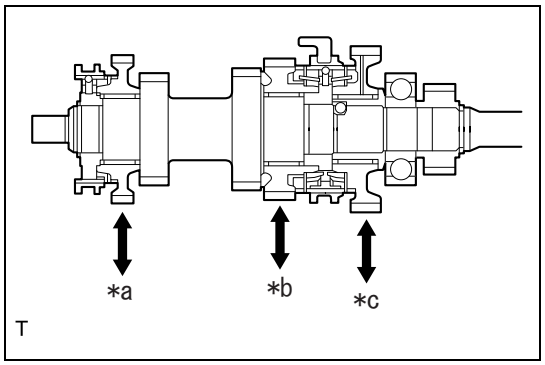

2. Radial clearance check
   (1) Check the radial clearances of the 1st gear, 2nd gear, and reverse gear.

Captions in illustration

*a	Reverse gear radial clearance
*b	2nd gear radial clearance
*c	1st gear radial clearance

Standard value

Gear	Standard value mm {in}	Limit mm {in}
1st gear	0.015 to 0.066 {0.000590 to 0.00260}	0.066 {0.00260}
2nd gear	0.015 to 0.066 {0.000590 to 0.00260}	0.066 {0.00260}
Reverse gear	0.015 to 0.066 {0.000590 to 0.00260}	0.066 {0.00260}

NOTE:
If the value exceeds the limit, replace the corresponding gear, needle roller bearing, and output shaft with new ones.

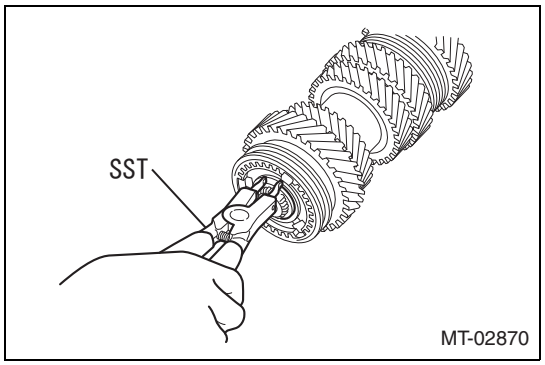

3. Removal of reverse gear
   (1) Use the SST to remove the shaft snap ring.
   SST 499895400

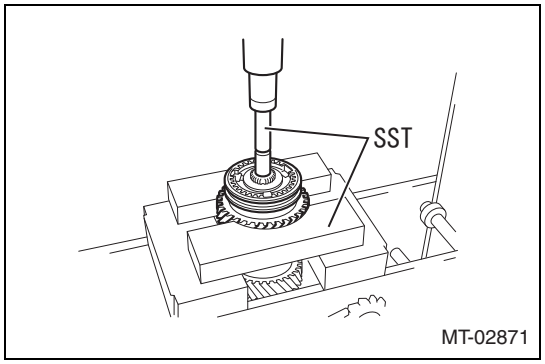

(2) Use the SST to remove the transmission clutch hub No.3, transmission hub sleeve No.3, reverse gear, synchronizer ring No.3, and reverse gear bearing from the output shaft.
SST 899714110, 899864100
CAUTION:
Verify the direction of the parts.

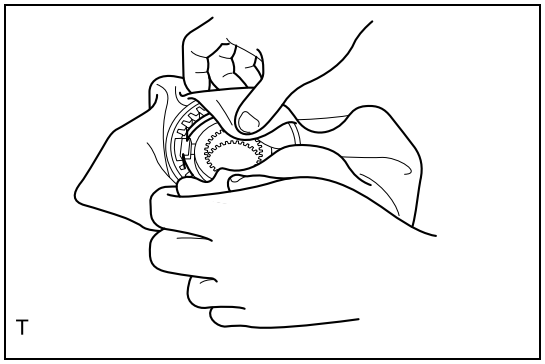

4. Removal of transmission hub sleeve No.3
(1) Remove the transmission hub sleeve No.3, then remove the 3 synchromesh shifting keys No.1, 3 synchromesh shifting key springs No.1, and 3 balls from the transmission clutch hub No.3.
CAUTION:
- Keep the synchromesh shifting keys No.1, synchromesh shifting key springs No.1, and balls from flying out using a cloth.
- Be careful not to deform the synchromesh shifting key springs No.1.

NOTE:
Perform the work without displacing the positions of the transmission clutch hub No.3 and synchromesh shifting keys No.1.

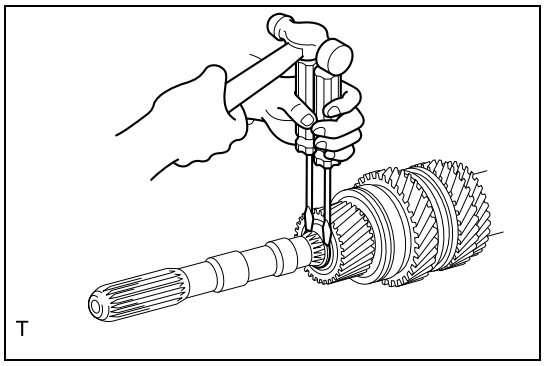

5. Removal of 6th gear
(1) Remove the shaft snap ring.
CAUTION:
Keep the shaft snap ring from flying out with a cloth, etc.

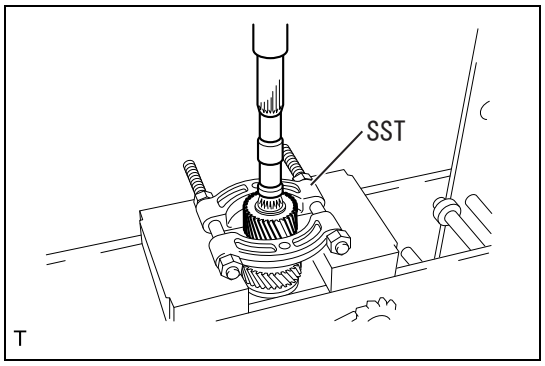

(2) Use the SST to remove the 6th gear.
SST 09950-00020

MT

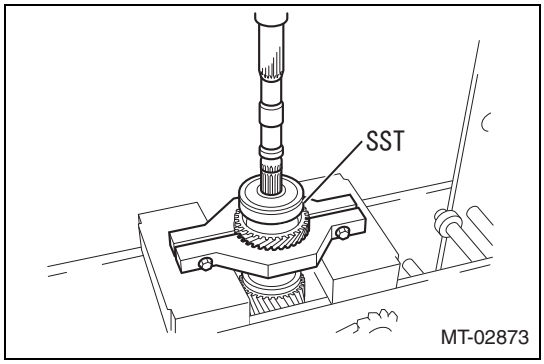

6. Removal of 1st gear
   (1) Use the SST to remove the output shaft bearing RR, 1st gear, 1st bearing inner race, 1st gear needle roller bearing, and 1st shift restrict ball.
   SST 18722AA000
   CAUTION:
   Verify the direction of the parts.

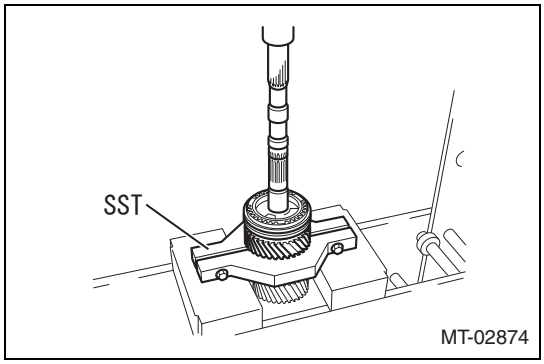

7. Removal of 2nd gear
   (1) Use the SST to remove the 2nd gear, transmission clutch hub No.1, transmission hub sleeve No.1, and 2nd gear needle roller bearing from the output shaft.
   SST 18722AA000
   CAUTION:
   Verify the direction of the parts.

8. Removal of synchronizer ring set No.1
   (1) Remove the 2 synchronizer ring No.1 sets.

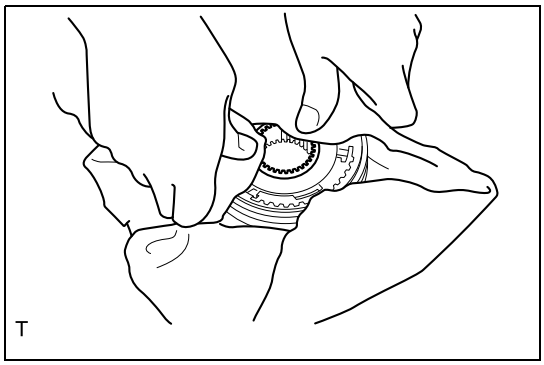

9. Removal of transmission hub sleeve No.1
   (1) Remove the transmission hub sleeve No.1, then remove the 3 synchromesh shifting keys No.1, 3 synchromesh shifting key springs No.1, and 3 balls from the transmission clutch hub No.1.
   CAUTION:
   - Keep the synchromesh shifting keys No.1, synchromesh shifting key springs No.1, and balls from flying out using a cloth.
   - Be careful not to deform the synchromesh shifting key springs No.1.

   NOTE:
   Perform the work without displacing the positions of the transmission clutch hub No.1 and synchromesh shifting keys No.1.

MT

Inspection

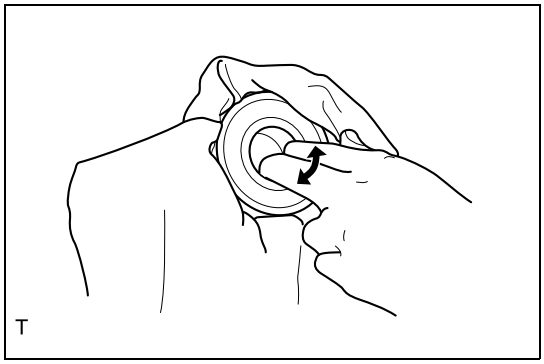

1. Check of output shaft bearing RR
   (1) Check the output shaft bearing RR.
   Criteria: There is no abnormal response, bind, noise, and play.
   NOTE:
   If defective, replace the output shaft bearing RR with a new one.

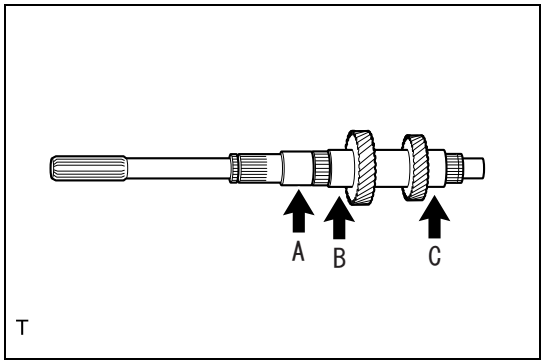

2. Output shaft check
   (1) Check the outer diameter of each part.
   Standard value

Inspection parts	Standard value mm {in}	Limit mm {in}
A	31.984 to 32.000 {1.25921 to 1.25984}	31.984 {1.25984}
B	42.984 to 43.000 {1.69228 to 1.69291}	42.984 {1.69291}
C	40.984 to 41.000 {1.61354 to 1.61417}	40.984 {1.61417}

   NOTE:
   If the value is smaller than the limit, replace the output shaft with a new one.

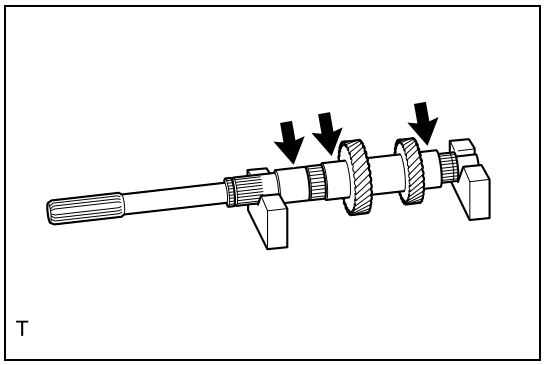

   (2) Check the runout at the points shown in the figure.
   Standard value: 0.03 mm {0.00118 in} or less
   NOTE:
   If the value is not within the limit, replace the output shaft with a new one.

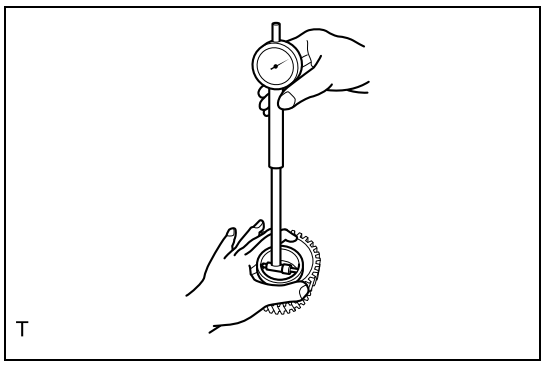

3. Reverse gear check
   (1) Check the inner diameter of the reverse gear.
   Standard value: 47.015 to 47.040 mm {1.85098 to 1.85197 in}
   Limit: 47.040 mm {1.85197 in}
   NOTE:
   If the value exceeds the limit, replace the reverse gear with a new one.

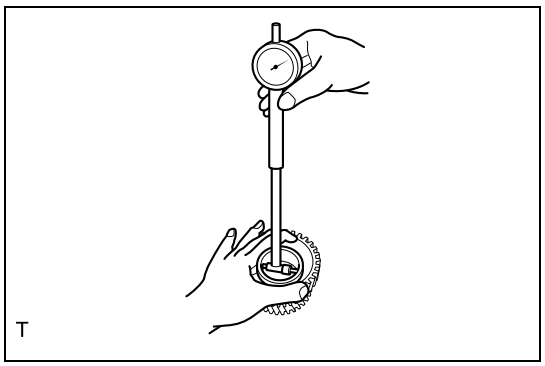

4. 1st gear check
   (1) Check the inner diameter of the 1st gear.
   Standard value: 46.315 to 46.340 mm {1.82425 to 1.82441 in}
   Limit: 46.340 mm {1.82441 in}
   NOTE:
   If the value exceeds the limit, replace the 1st gear with a new one.

MT

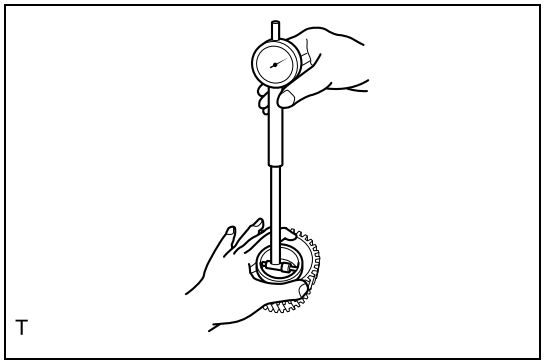

5. 2nd gear check
   (1) Check the inner diameter of the 2nd gear.
   Standard value: 49.015 to 49.040 mm {1.92972 to 1.93071 in}
   Limit: 49.040 mm {1.93071 in}
   NOTE:
   If the value exceeds the limit, replace the 2nd gear with a new one.

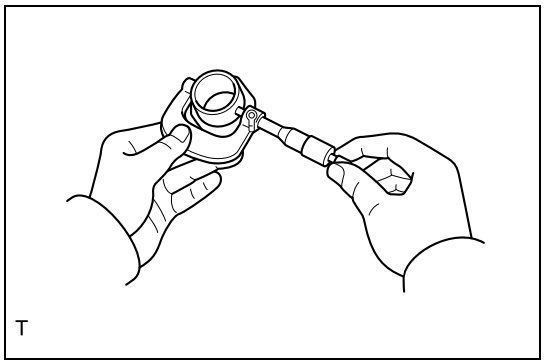

6. Check of 1st gear bearing inner race
   (1) Check the outer diameter of the 1st gear bearing inner race.
   Standard value: 40.284 to 40.300 mm {1.58598 to 1.58661 in}
   Limit: 40.284 mm {1.58598 in}
   NOTE:
   If the value is smaller than the limit, replace the 1st gear bearing inner race with a new one.

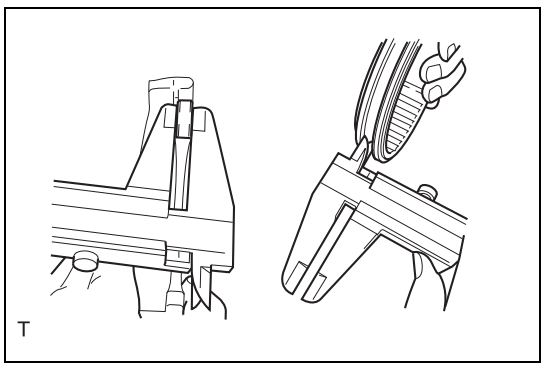

7. Check of transmission hub sleeve No.1 clearance
   (1) Check the thickness of the gear shift fork No.1 claw.
   Standard value: 7.9 to 8.0 mm {0.311 to 0.315 in}
   Limit: 7.9 mm {0.311 in}
   NOTE:
   If the value is smaller than the limit, replace the gear shift fork No.1 with a new one.
   (2) Measure the groove of the transmission hub sleeve No.1 and calculate the clearance between it and the gear shift fork No.1.
   Standard value: 0.15 to 0.35 mm {0.00590 to 0.0138 in}
   Limit: 0.35 mm {0.0138 in}
   NOTE:
   If the value exceeds the limit, replace the gear shift fork No.1 and the transmission hub sleeve No.1 with new ones as a set.

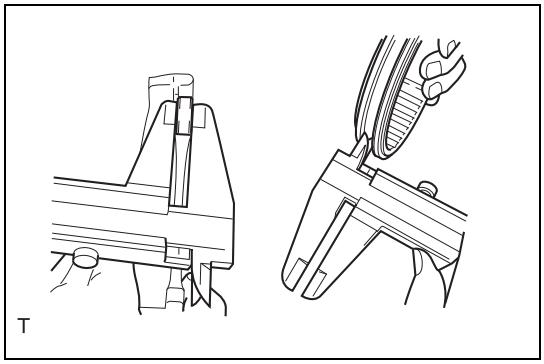

8. Check of transmission hub sleeve No.3 clearance
   (1) Check the thickness of the gear shift fork No.3 claw.
   Standard value: 7.9 to 8.0 mm {0.311 to 0.315 in}
   Limit: 7.9 mm {0.311 in}
   NOTE:
   If the value is smaller than the limit, replace the gear shift fork No.3 with a new one.
   (2) Measure the groove of the transmission hub sleeve No.3 and calculate the clearance between it and the gear shift fork No.3.
   Standard value: 0.15 to 0.35 mm {0.00590 to 0.0138 in}
   Limit: 0.35 mm {0.0138 in}
   NOTE:
   If the value exceeds the limit, replace the gear shift fork No.3 and the transmission hub sleeve No.3 with new ones as a set.

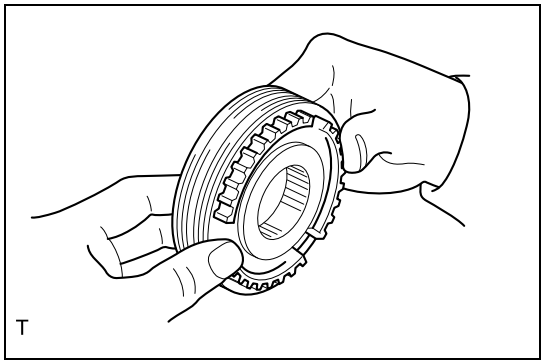

9. Check of transmission hub sleeve No.1
   (1) Check that the end of the spline gear of the transmission hub sleeve No.1 is not worn.
   NOTE:
   If it is worn, replace the transmission hub sleeve No.1 with a new one.
   (2) Install the transmission hub sleeve No.1 to the transmission clutch hub No.1 and check that they slide smoothly.
   NOTE:
   If they do not slide smoothly, replace the transmission hub sleeve No.1 and the transmission clutch hub No.1 with new ones.

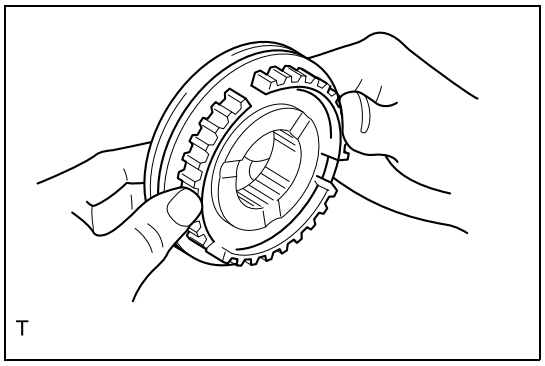

10. Check of transmission hub sleeve No.3
   (1) Check that the end of the spline gear of the transmission hub sleeve No.3 is not worn.
   NOTE:
   If it is worn, replace the transmission hub sleeve No.3 with a new one.
   (2) Install the transmission hub sleeve No.3 to the transmission clutch hub No.3 and check that they slide smoothly.
   NOTE:
   If they do not slide smoothly, replace the transmission hub sleeve No.3 and the transmission clutch hub No.3 with new ones.

11. Check of synchronizer ring set No.1 (for 1st gear)
   (1) Apply manual transmission oil to the tapered cone portion of the 1st gear and the synchronizer ring set No.1, and check the clearance between the synchronizer ring set No.1 and the 1st gear while pressing the synchronizer ring set No.1 by hand.

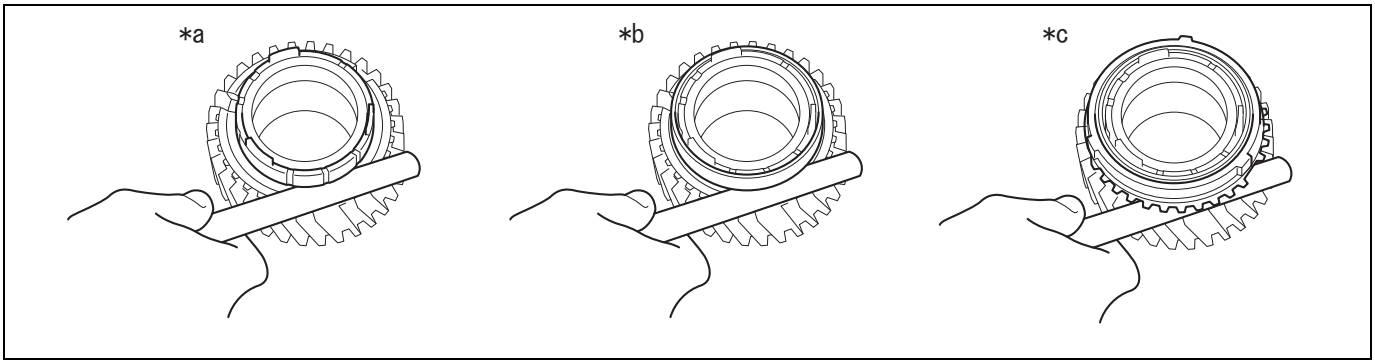

Captions in illustration

*a	Inner	*b	Middle
*c	Outer	-	-

Standard value

Measured part	Standard value mm {in}
Inner	0.48 to 1.12 {0.0189 to 0.0441}
Middle	0.38 to 1.22 {0.0150 to 0.0480}
Outer	0.8 to 1.8 {0.0315 to 0.0709}

CAUTION:
Check the entire circumference of the gear.
NOTE:
- If the value is not within the standard value, replace the synchronizer ring set No.1 with a new one.
- Be sure to use the recommended product or the substitute product for manual transmission oil. (Refer to MT - 4)

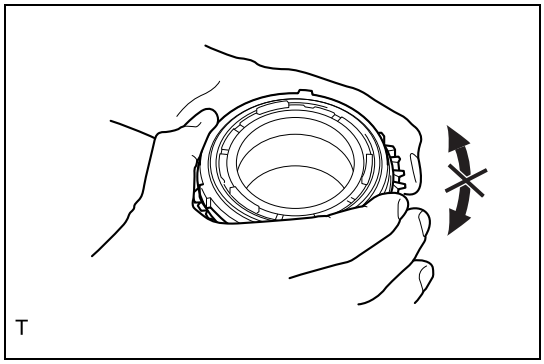

(2) Apply manual transmission oil to the tapered cone portion of the 1st gear, and check that the synchronizer ring set No.1 does not slip in the circumferential direction while pressing it by hand.
NOTE:
- If it slips, replace the synchronizer ring set No.1 with a new one.
- Be sure to use the recommended product or the substitute product for manual transmission oil. (Refer to MT - 4)

12. Check of synchronizer ring set No.1 (for 2nd gear)
(1) Apply manual transmission oil to the tapered cone portion of the 2nd gear and the synchronizer ring set No.1, and check the clearance between the synchronizer ring set No.1 and the 2nd gear while pressing the synchronizer ring set No.1 by hand.

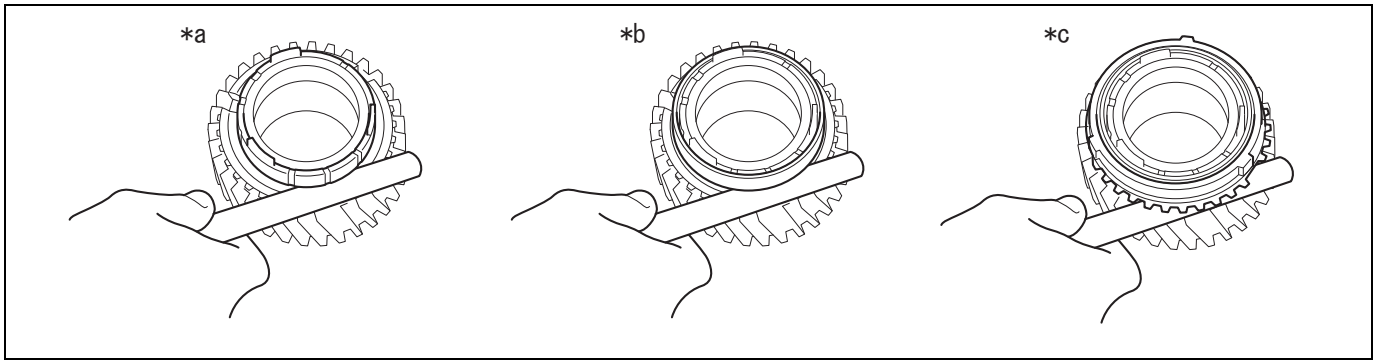

Captions in illustration

*a	Inner	*b	Middle
*c	Outer	-	-

Standard value

Measured part	Standard value mm {in}
Inner	0.48 to 1.12 {0.0189 to 0.0441}
Middle	0.38 to 1.22 {0.0150 to 0.0480}
Outer	0.8 to 1.8 {0.0315 to 0.0709}

CAUTION:
Check the entire circumference of the gear.
NOTE:
- If the value is not within the standard value, replace the synchronizer ring set No.1 with a new one.
- Be sure to use the recommended product or the substitute product for manual transmission oil. (Refer to MT - 4)

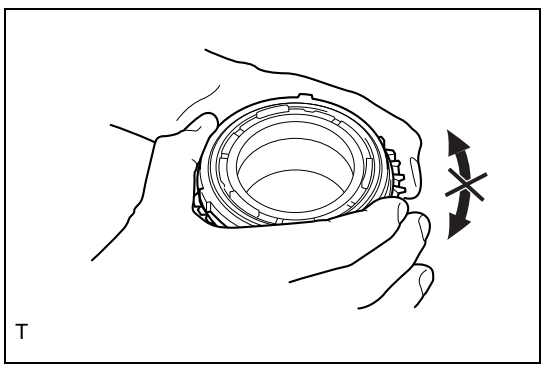

(2) Apply manual transmission oil to the tapered cone portion of the 2nd gear, and check that the synchronizer ring set No.1 does not slip in the circumferential direction while pressing it by hand.
NOTE:
- If it slips, replace the synchronizer ring set No.1 with a new one.
- Be sure to use the recommended product or the substitute product for manual transmission oil. (Refer to MT - 4)

Assembly

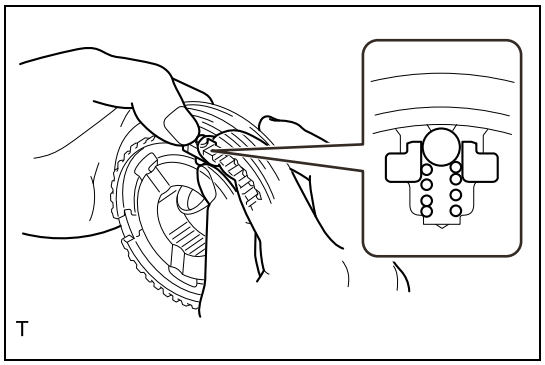

1. Installation of transmission hub sleeve No.1
   (1) Apply manual transmission oil to the sliding area of the transmission clutch hub No.1.
   NOTE:
   Be sure to use the recommended product or the substitute product for manual transmission oil. (Refer to MT - 4)
   (2) Install the transmission hub sleeve No.1 to the transmission clutch hub No.1, and install the 3 balls after installing the 3 synchromesh shifting keys No.1 and the 3 synchromesh shifting key springs No.1 as a unit.
   NOTE:
   • Install the balls while pressing the synchromesh shifting key spring No.1.
   • After the installation, settle the synchromesh shifting key spring No.1.

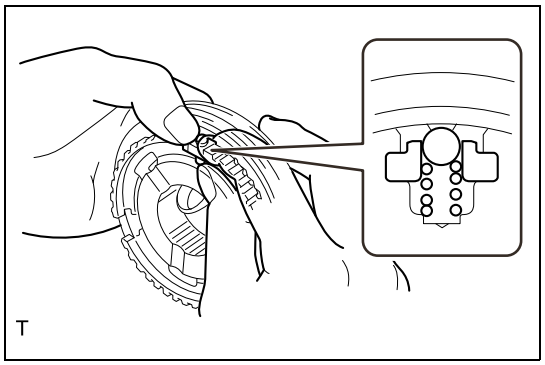

2. Installation of transmission hub sleeve No.3
   (1) Apply manual transmission oil to the sliding area of the transmission clutch hub No.3.
   NOTE:
   Be sure to use the recommended product or the substitute product for manual transmission oil. (Refer to MT - 4)
   (2) Install the transmission hub sleeve No.3 to the transmission clutch hub No.3, and install the 3 balls after installing the 3 synchromesh shifting keys No.1 and the 3 synchromesh shifting key springs No.1 as a unit.
   NOTE:
   • Install the balls while pressing the synchromesh shifting key spring No.1.
   • After the installation, settle the synchromesh shifting key spring No.1.

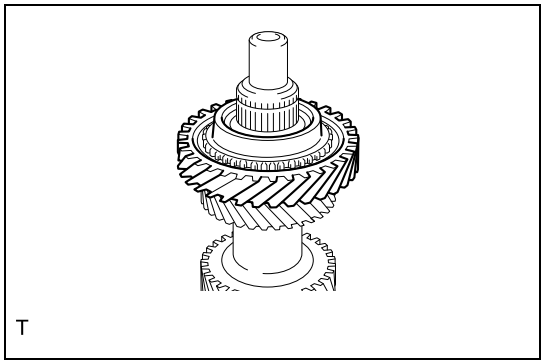

3. Reverse gear installation
   (1) Apply manual transmission oil to the output shaft installation portion, the reverse gear bearing, and the inner surface and the tapered cone portion of the reverse gear.
   NOTE:
   Be sure to use the recommended product or the substitute product for manual transmission oil. (Refer to MT - 4)
   (2) Install the reverse gear bearing and the reverse gear to the output shaft.

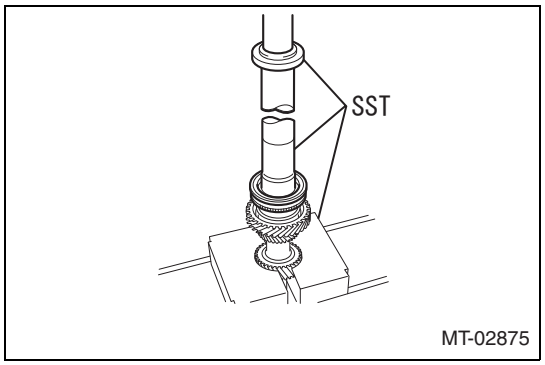

4. Installation of transmission clutch hub No.3
   (1) Install the synchronizer ring No.3 to the reverse gear.
   (2) Use the SST to install the transmission clutch hub No.3.
   SST 499277100, 398477703, 899714110
   NOTE:
   • After installing the transmission clutch hub No.3, check that the synchronizer ring moves in the thrust direction.
   • Press-fit the transmission clutch hub No.3 until it contacts the output shaft.
   • Match the phases of the transmission clutch hub No.3 and the synchronizer ring No.3.

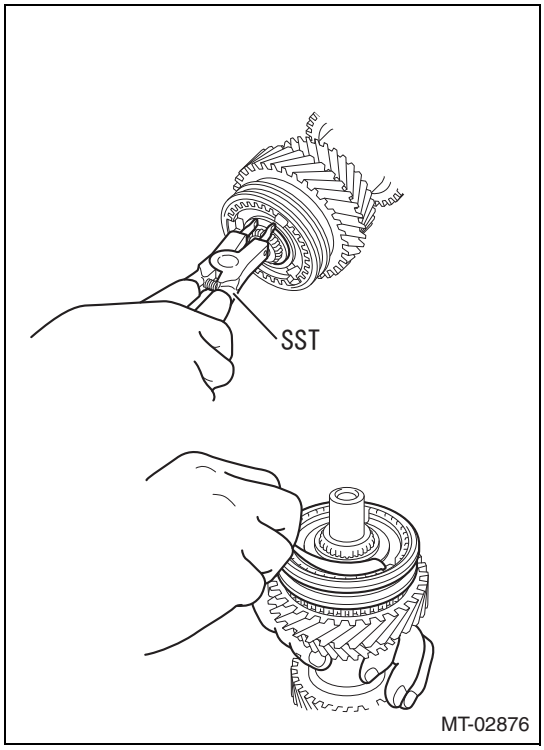

5. Installation of shaft snap ring (transmission clutch hub No.3)
   (1) Select a shaft snap ring so that the thrust clearance between the transmission clutch hub No.3 and the shaft snap ring is within the standard value.
   Standard value: 0 to 0.1 mm {0 to 0.00394 in}
   NOTE:
   Select a shaft snap ring with the maximum thickness that can be installed.

Shaft snap ring type

Item number	Thickness mm {in}	Identification mark
17005AA520	1.80 {0.07086}	A
17005AA530	1.85 {0.07283}	B
17005AA540	1.90 {0.07480}	C
17005AA550	1.95 {0.07677}	D
17005AA560	2.00 {0.07874}	E
17005AA570	2.05 {0.08070}	F

   (2) Use the SST to install a new shaft snap ring to the output shaft.
   SST 499895400

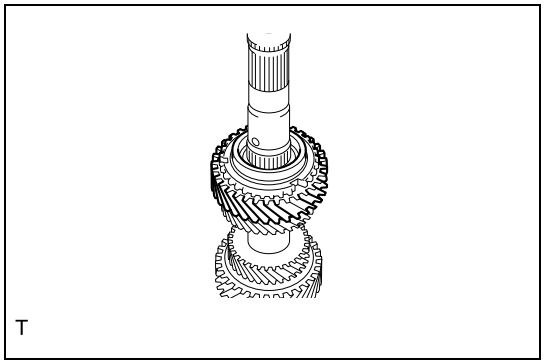

6. 2nd gear installation
   (1) Apply manual transmission oil to the output shaft installation portion, the 2nd gear needle roller bearing, and the inner surface and the tapered cone portion of the 2nd gear.
   NOTE:
   Be sure to use the recommended product or the substitute product for manual transmission oil. (Refer to MT - 4)
   (2) Install the 2nd gear needle roller bearing and the 2nd gear to the output shaft.

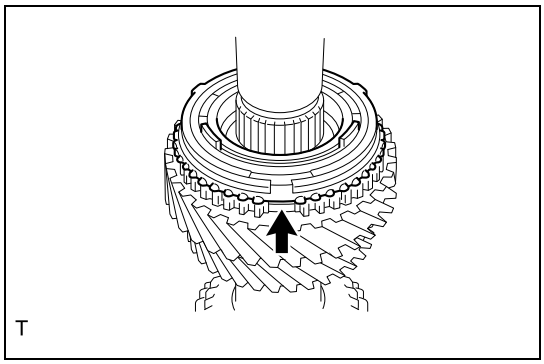

7. Installation of transmission clutch hub No.1
   (1) Align the synchronizer ring set No.1 (for 2nd gear) to the position shown in the figure and install it.
   CAUTION:
   - Align the middle ring claw with the gear groove.
   - Align the inner ring claw with the outer ring claw groove.

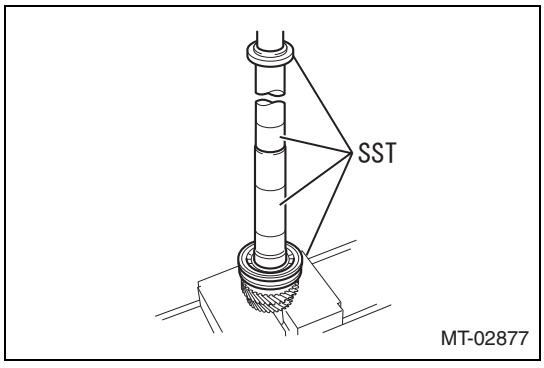

   (2) Use the SST to install the transmission clutch hub No.1.
   SST 499277100, 899714110, 398477703, 499277000
   NOTE:
   - After installing the transmission clutch hub No.1, check that the synchronizer ring set No.1 (for 2nd gear) moves in the thrust direction.
   - Press-fit the transmission clutch hub No.1 until it contacts the output shaft.

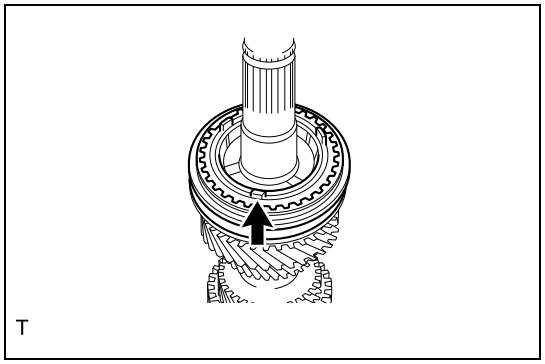
T

(3) Align the synchronizer ring set No.1 (for 1st gear) to the position shown in the figure and install it.
CAUTION:
- Align the protruded section of the outer ring with the hub groove.
- Align the inner ring claw with the outer ring claw groove.

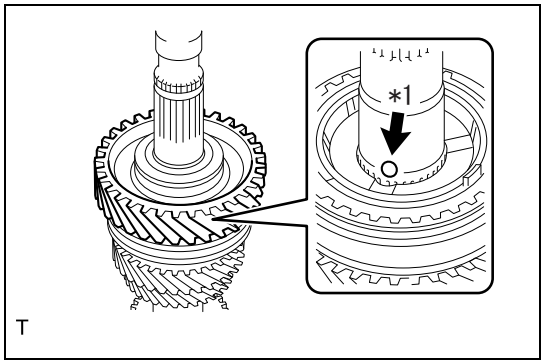

T

8. 1st gear installation
(1) Apply manual transmission oil to the output shaft installation portion, the needle roller bearing inner race, and the inner surface and the tapered cone portion of the 1st gear.
NOTE:
Be sure to use the recommended product or the substitute product for manual transmission oil. (Refer to MT - 4)
(2) Install the 1st shift restrict ball, 1st gear, 1st gear needle roller bearing, and 1st gear bearing inner race to the output shaft.
CAUTION:
Align the middle ring claw with the gear groove.

Captions in illustration

*1	1st shift restrict ball

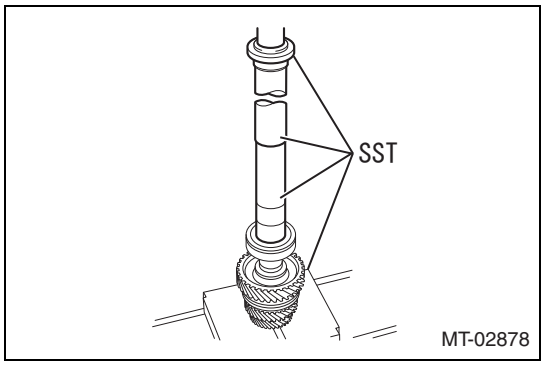

9. Installation of output shaft bearing RR
(1) Use the SST to install the output shaft bearing RR.
SST 499277100, 899714110, 398477703, 499277000
NOTE:
Press-fit the output shaft bearing RR until it contacts the 1st gear bearing inner race.

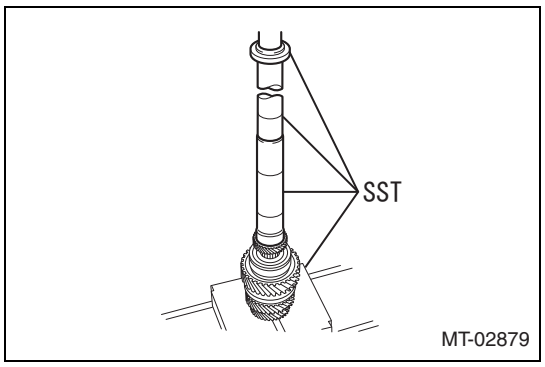

10. 6th gear installation
(1) Use the SST to install the 6th gear.
SST 499277100, 899714110, 398477703, 499277000
NOTE:
Press-fit the 6th gear until it contacts the output shaft bearing RR.

MT

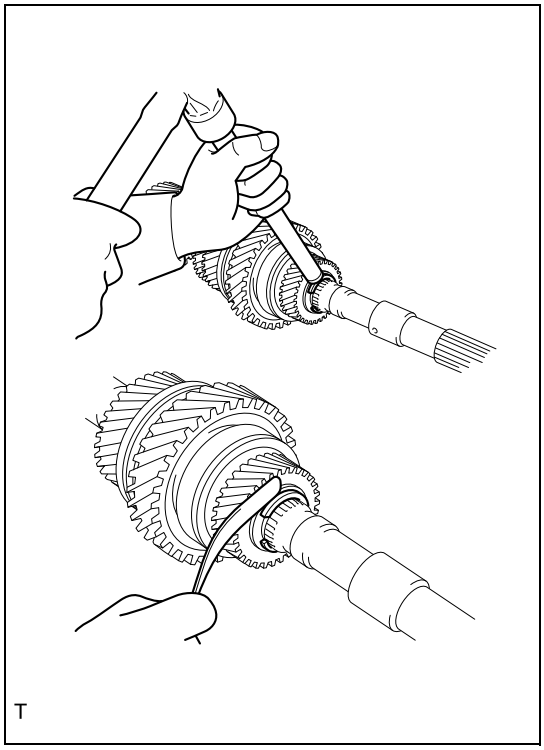

T

11. Installation of shaft snap ring (6th gear)
    (1) Select a shaft snap ring so that the thrust clearance between the 6th gear and the shaft snap ring is within the standard value.
    Standard value: 0.1 to 0.11 mm {0.00394 to 0.00433 in}
    NOTE:
    Select a shaft snap ring with the maximum thickness that can be installed.

Shaft snap ring type

Item number	Thickness mm {in}	Identification mark
17005AA350	2.67 {0.10511}	A
17005AA360	2.73 {0.10748}	B
17005AA370	2.79 {0.10984}	C
17005AA380	2.85 {0.11220}	D
17005AA390	2.91 {0.11456}	E
17005AA400	2.97 {0.11692}	F
17005AA410	3.03 {0.11929}	G
17005AA420	3.09 {0.12165}	H
17005AA430	3.15 {0.12401}	J
17005AA440	3.21 {0.12638}	K
17005AA450	3.27 {0.12874}	L

    (2) Install a new shaft snap ring to the output shaft.

Counter gear ASSY

Exploded view

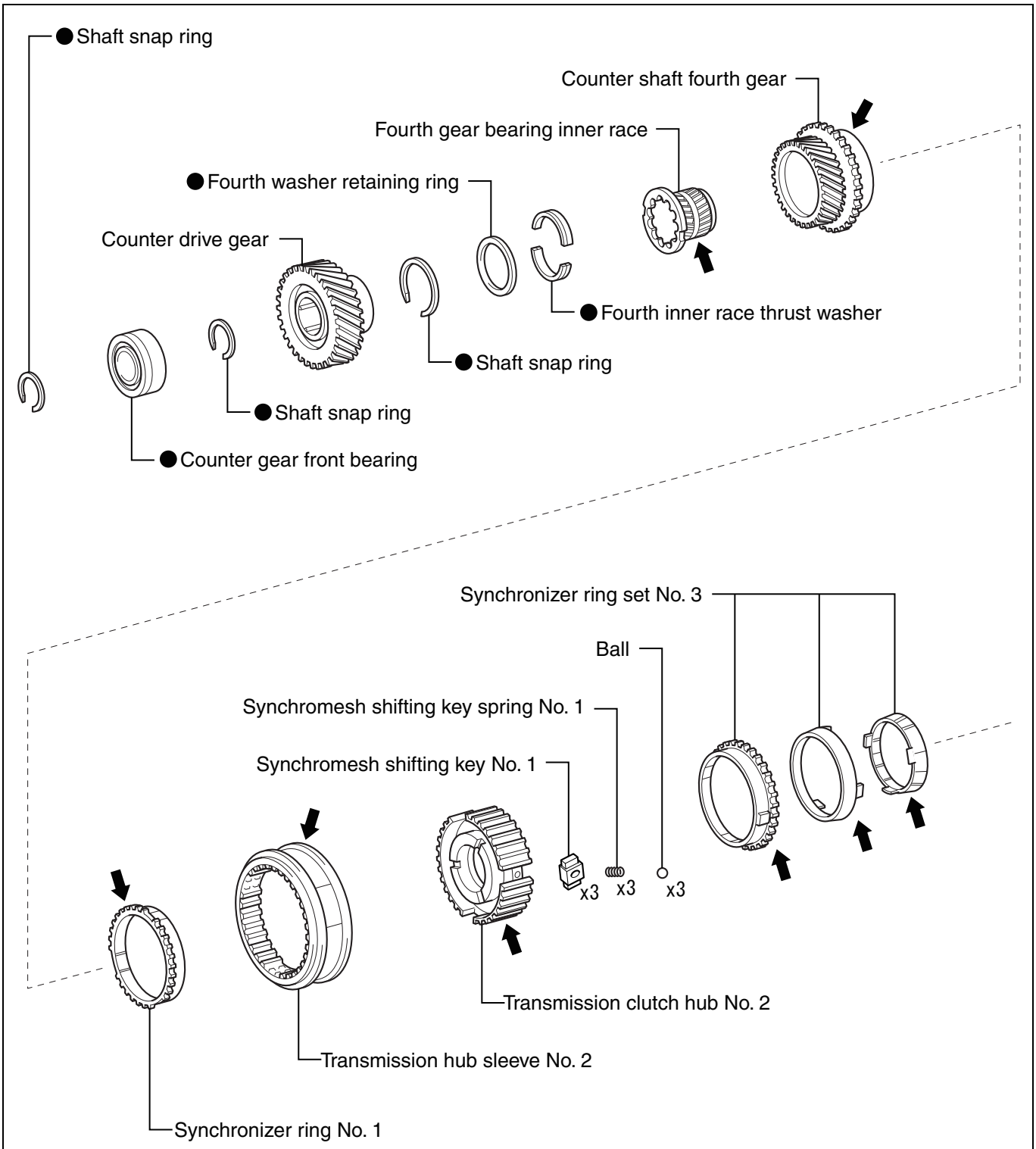

NOTE:
Be sure to use the recommended product or the substitute product for manual transmission oil. (Refer to MT - 4)

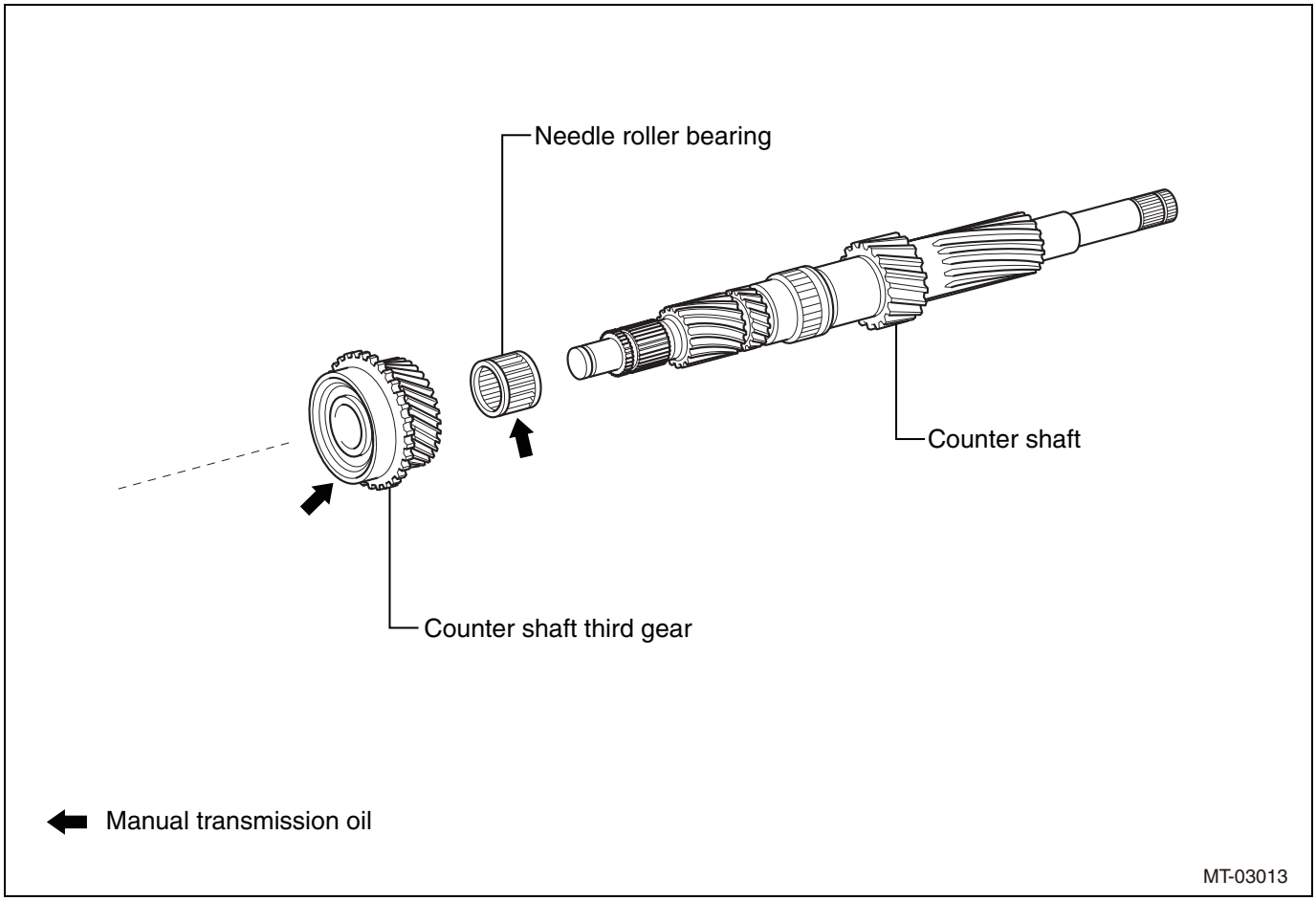

NOTE:
Be sure to use the recommended product or the substitute product for manual transmission oil. (Refer to MT - 4)

Disassembly

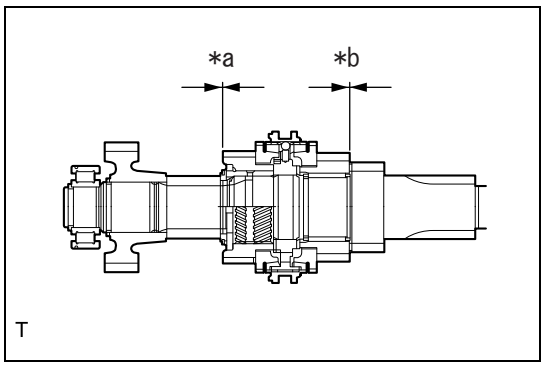

1. Thrust clearance check
   (1) Check the thrust clearances of the counter shaft 3rd gear and counter shaft 4th gear.

Captions in illustration

*a	Counter shaft 4th gear thrust clearance
*b	Counter shaft 3rd gear thrust clearance

Standard value

Gear	Standard value mm {in}	Limit mm {in}
Counter shaft 3rd gear	0.10 to 0.35 {0.00394 to 0.0138}	0.35 {0.0138}
Counter shaft 4th gear	0.10 to 0.35 {0.00394 to 0.0138}	0.35 {0.0138}

NOTE:
If the value exceeds the limit, adjust with the 4th inner race thrust washer.

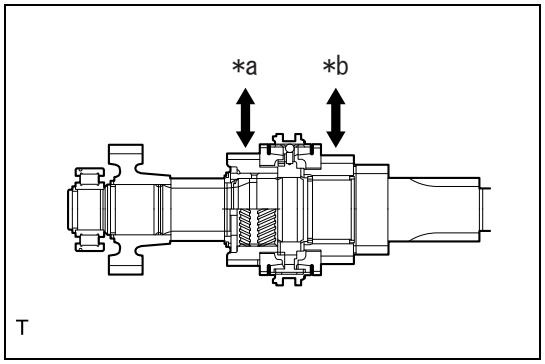

2. Radial clearance check
   (1) Check the radial clearances of the counter shaft 3rd gear and counter shaft 4th gear.

Captions in illustration

*a	Counter shaft 4th gear radial clearance
*b	Counter shaft 3rd gear radial clearance

Standard value

Gear	Standard value mm {in}	Limit mm {in}
Counter shaft 3rd gear	0.015 to 0.068 {0.000590 to 0.00268}	0.068 {0.00268}
Counter shaft 4th gear	0.065 to 0.115 {0.002559 to 0.00453}	0.115 {0.00453}

NOTE:
If the value exceeds the limit, replace the corresponding gear and needle roller bearing or 4th gear bearing inner race with new ones as a set.

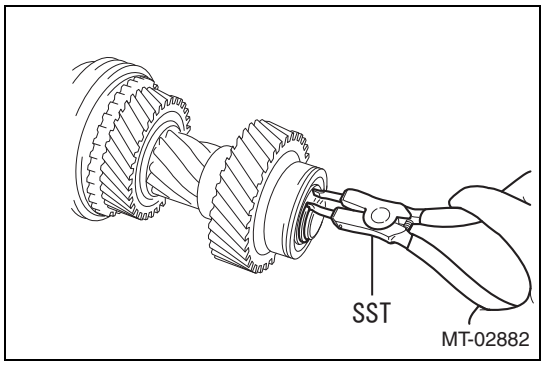

3. Removal of counter gear front bearing
   (1) Use the SST to remove the shaft snap ring.
   SST 499895400
   CAUTION:
   Verify the direction of the parts.

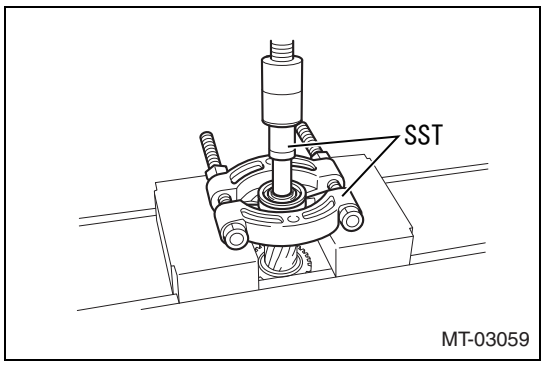

   (2) Use the SST to remove the counter gear front bearing.
   SST 09950-00020, 899864100

4. Removal of counter drive gear
   (1) Use the SST to remove the shaft snap ring.
   SST 499895400

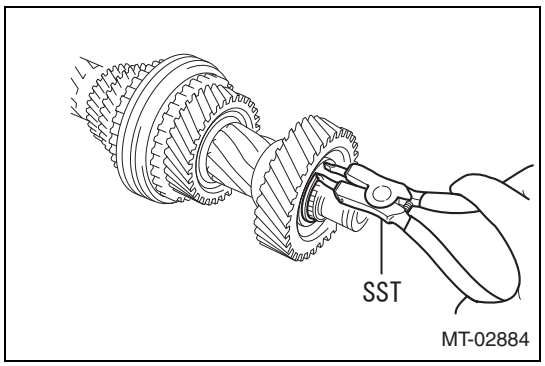

MT

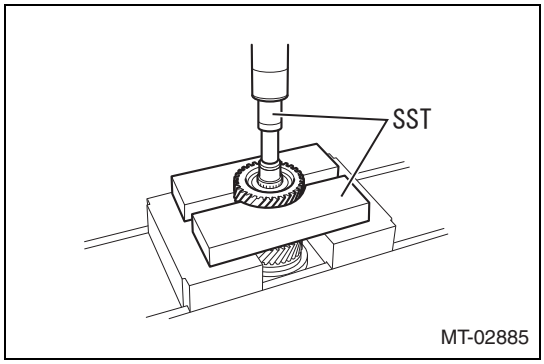

(2) Use the SST to remove the counter drive gear.
SST 899714110, 899864100

5. Removal of counter shaft 4th gear

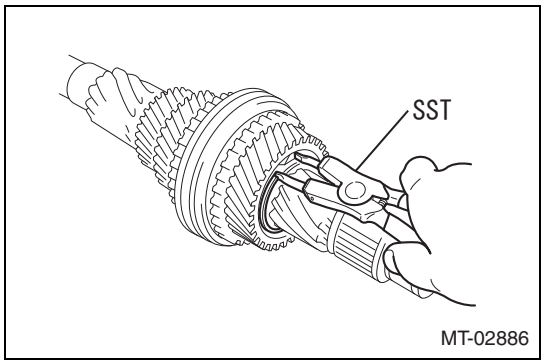

(1) Use the SST to remove the shaft snap ring, then remove the 4th inner race thrust washer after removing the 4th washer retaining ring.
SST 499895400
CAUTION:
Verify the direction of the parts.

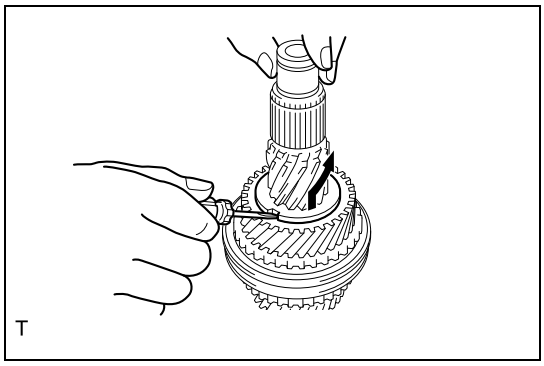

(2) Remove the 4th gear bearing inner race by turning it counterclockwise along the gear while prying with a flat tip screwdriver.

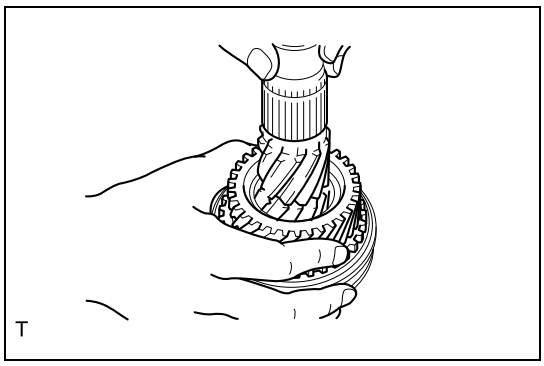

(3) Remove the counter shaft 4th gear and synchronizer ring No.1.

6. Removal of counter shaft 3rd gear

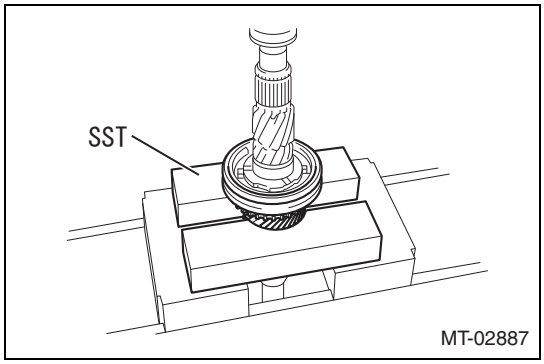

(1) Use the SST to remove the transmission clutch hub No.2, counter shaft 3rd gear, synchronizer ring set No.3, and needle roller bearing.
SST 899714110
CAUTION:
Verify the direction of the parts.

MT

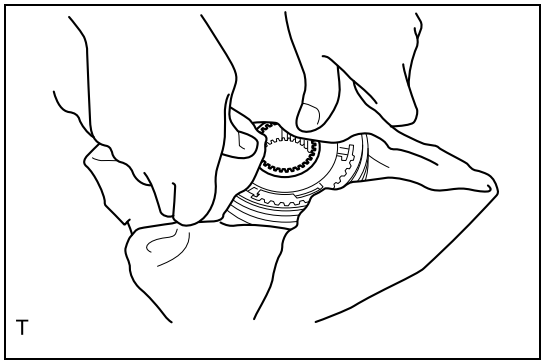

7. Removal of transmission hub sleeve No.2
   (1) Remove the transmission hub sleeve No.2, then remove the 3 synchromesh shifting keys No.1, 3 synchromesh shifting key springs No.1, and 3 balls from the transmission clutch hub No.2.
   CAUTION:
   - Keep the synchromesh shifting keys No.1, synchromesh shifting key springs No.1, and balls from flying out using a cloth.
   - Be careful not to deform the synchromesh shifting key springs No.1.
   - Verify the direction of the parts.

   NOTE:
   Perform the work without displacing the positions of the transmission clutch hub No.2 and synchromesh shifting keys No.1.

Inspection

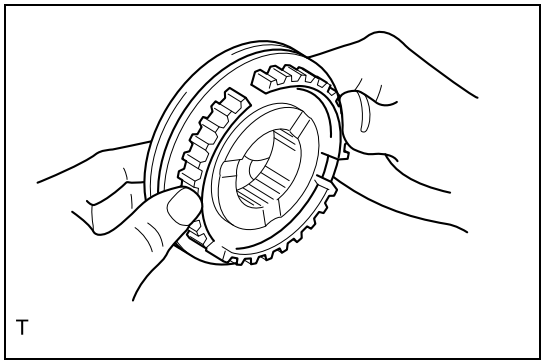

1. Check of transmission hub sleeve No.2
   (1) Check that the end of the spline gear of the transmission hub sleeve No.2 is not worn.
   NOTE:
   If it is worn, replace the transmission hub sleeve No.2 with a new one.
   (2) Install the transmission hub sleeve No.2 to the transmission clutch hub No.2 and check that they slide smoothly.
   NOTE:
   If they do not slide smoothly, replace the transmission hub sleeve No.2 and the transmission clutch hub No.2 with new ones.

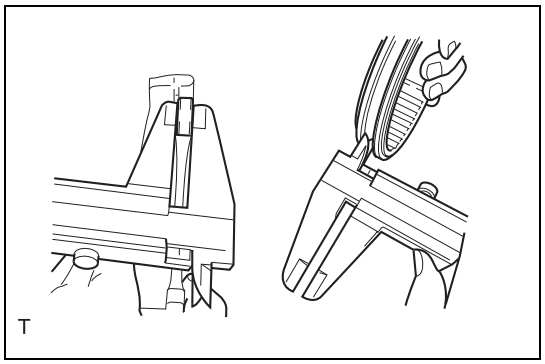

2. Check of transmission hub sleeve No.2 clearance
   (1) Check the thickness of the gear shift fork No.2 claw.
   Standard value: 7.9 to 8.0 mm {0.311 to 0.315 in}
   Limit: 7.9 mm {0.311 in}
   NOTE:
   If the value is smaller than the limit, replace the gear shift fork No.2 with a new one.
   (2) Measure the groove of the transmission hub sleeve No.2 and calculate the clearance between it and the gear shift fork No.2.
   Standard value: 0.15 to 0.35 mm {0.00590 to 0.0138 in}
   Limit: 0.35 mm {0.0138 in}
   NOTE:
   If the value exceeds the limit, replace the gear shift fork No.2 and the transmission hub sleeve No.2 with new ones as a set.

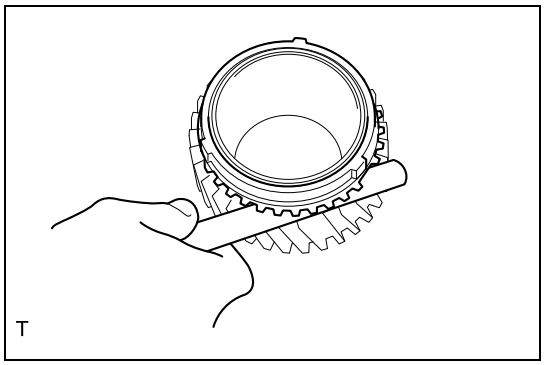

3. Check of synchronizer ring No.1
   (1) Apply manual transmission oil to the tapered cone portion of the counter shaft 4th gear, and check the clearance between the synchronizer ring No.1 and the counter shaft 4th gear while pressing the synchronizer ring No.1 by hand.
   Standard value: 0.8 to 1.6 mm {0.0314 to 0.0629 in}
   Limit: 0.8 mm {0.0314 in}
   CAUTION:
   Check the entire circumference of the gear.
   NOTE:
   - If the value is smaller than the limit, replace the synchronizer ring No.1 and counter shaft 4th gear with new ones.
   - Be sure to use the recommended product or the substitute product for manual transmission oil. (Refer to MT - 4)

MT

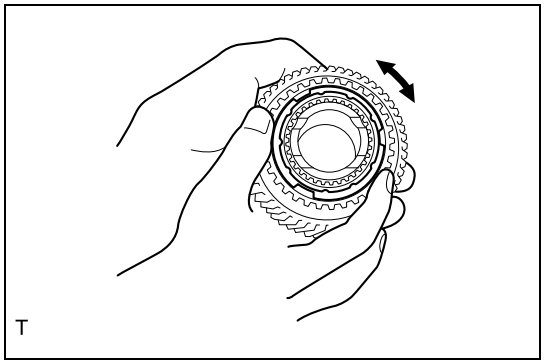

(2) Apply manual transmission oil to the tapered cone portion of the counter shaft 4th gear, and check that the synchronizer ring No.1 does not slip in the circumferential direction while pressing it by hand.
NOTE:
- If it slips, replace the synchronizer ring No.1 and counter shaft 4th gear with new ones.
- Be sure to use the recommended product or the substitute product for manual transmission oil. (Refer to MT - 4)

4. Check of synchronizer ring No.3
(1) Apply manual transmission oil to the tapered cone portion of the counter shaft 3rd gear and the synchronizer ring set No.3, and check the clearance between the synchronizer ring set No.3 and the counter shaft 3rd gear while pressing the synchronizer ring set No.3 by hand.

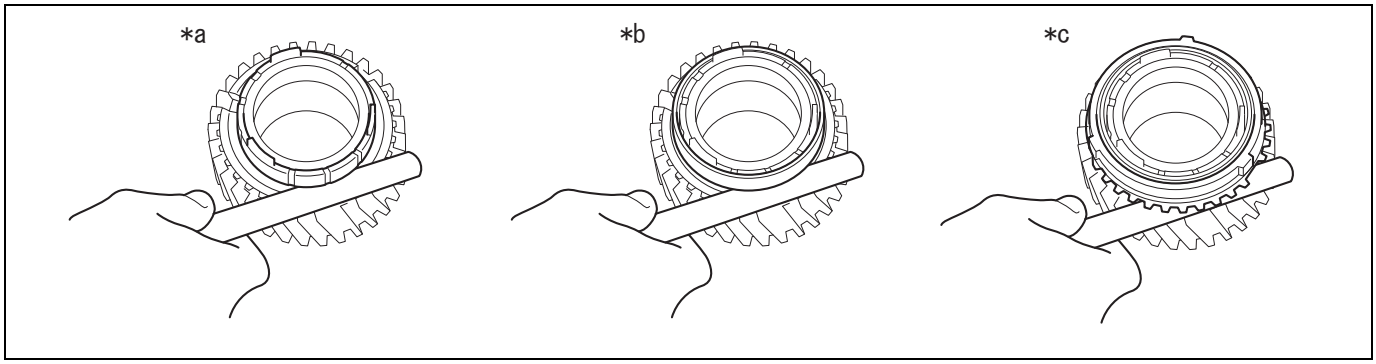

Captions in illustration

*a	Inner	*b	Middle
*c	Outer	-	-

Standard value

Measured part	Standard value mm {in}
Inner	0.4 to 1.2 {0.0157 to 0.0472}
Middle	0.3 to 1.3 {0.0118 to 0.0512}
Outer	0.8 to 1.8 {0.0315 to 0.0709}

CAUTION:
Check the entire circumference of the gear.
NOTE:
- If the value exceeds the limit, replace the synchronizer ring set No.3 with a new one.
- Be sure to use the recommended product or the substitute product for manual transmission oil. (Refer to MT - 4)

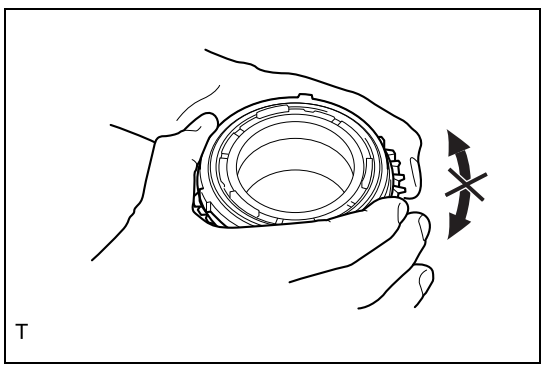

(2) Apply manual transmission oil to the tapered cone portion of the counter shaft 3rd gear, and check that the synchronizer ring set No.3 does not slip in the circumferential direction while pressing it by hand.
NOTE:
- If it slips, replace the synchronizer ring set No.3 with a new one.
- Be sure to use the recommended product or the substitute product for manual transmission oil. (Refer to MT - 4)

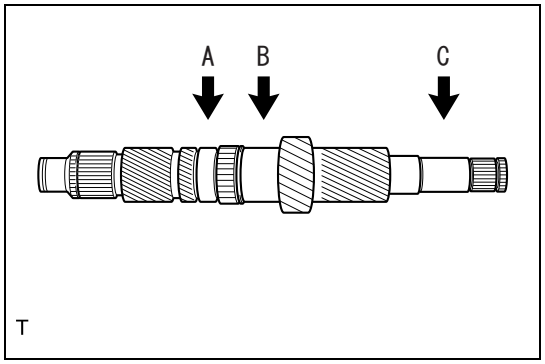

5. Counter shaft check
   (1) Check the outer diameter of each part.
   Standard value

Inspection parts	Standard value mm {in}	Limit mm {in}
A	39.284 to 39.300 {1.54661 to 1.54721}	39.284 {1.54661}
B	37.984 to 38.000 {1.49543 to 1.49606}	37.984 {1.49543}
C	24.987 to 25.000 {0.98374 to 0.98425}	24.987 {0.98374}

NOTE:
If the value is smaller than the limit, replace the counter shaft with a new one.

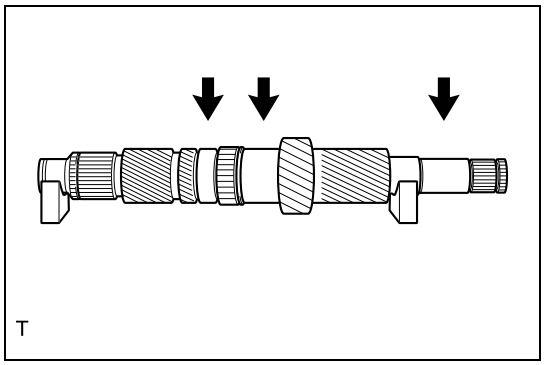

(2) Check the runout of the points shown in the figure.
Standard value: 0.03 mm {0.00118 in} or less
NOTE:
If the value is not within the limit, replace the counter shaft with a new one.

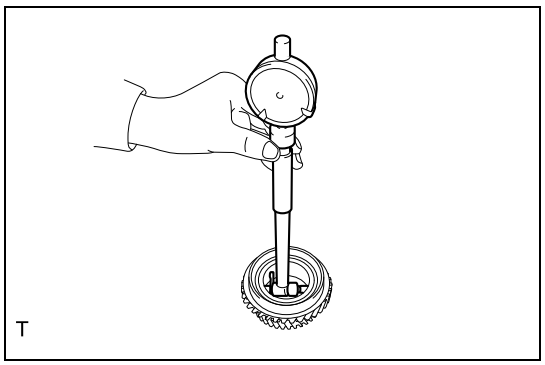

6. Check of counter shaft 3rd gear
   (1) Check the inner diameter of the counter shaft 3rd gear.
   Standard value: 43.015 to 43.040 mm {1.69350 to 1.69448 in}
   Limit: 43.040 mm {1.69448 in}
   NOTE:
   If the value exceeds the limit, replace the counter shaft 3rd gear with a new one.

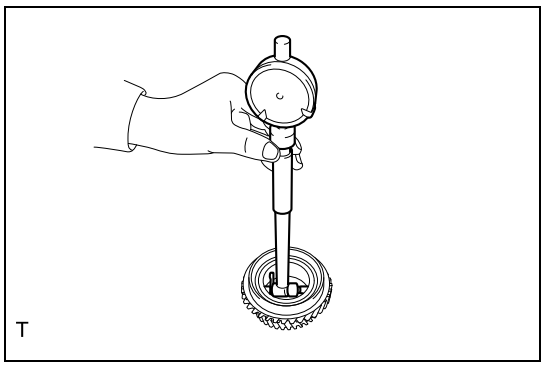

7. Counter shaft 4th gear check
   (1) Check the inner diameter of the counter shaft 4th gear.
   Standard value: 46.315 to 46.340 mm {1.82425 to 1.82441 in}
   Limit: 46.340 mm {1.82441 in}
   NOTE:
   If the value exceeds the limit, replace the counter shaft 4th gear with a new one.

MT

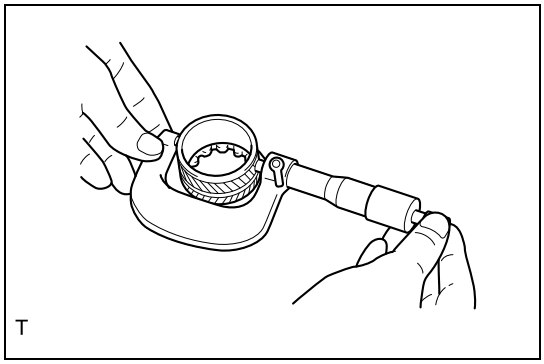

8. Check of 4th gear bearing inner race
   (1) Check the outer diameter of the 4th gear bearing inner race.
   Standard value: 46.225 to 46.250 mm {1.81988 to 1.82087 in}
   Limit: 46.225 mm {1.81988 in}
   CAUTION:
   Do not measure the oil groove.
   NOTE:
   If the value is smaller than the limit, replace the 4th gear bearing inner race with a new one.

Assembly

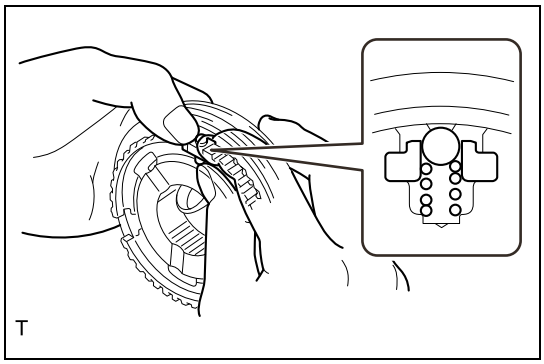

1. Installation of transmission hub sleeve No.2
   (1) Apply manual transmission oil to the sliding area of the transmission clutch hub No.2.
   NOTE:
   Be sure to use the recommended product or the substitute product for manual transmission oil. (Refer to MT - 4)
   (2) Install the transmission hub sleeve No.2 to the transmission clutch hub No.2, and install the 3 balls after installing the 3 synchromesh shifting keys No.1 and the 3 synchromesh shifting key springs No.1 as a unit.
   NOTE:
   - Install the shifting key pole while pressing the shifting key spring. Install the balls while pressing the synchromesh shifting key spring No.1.
   - After the installation, settle the synchromesh shifting key spring No.1.

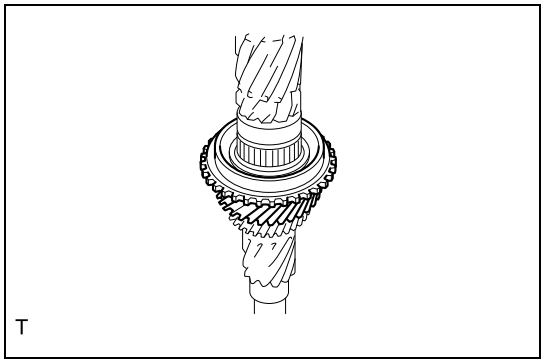

2. Installation of counter shaft 3rd gear
   (1) Apply manual transmission oil to the counter shaft installation portion, the needle roller bearing, and the inner surface and the tapered cone portion of the counter shaft 3rd gear.
   NOTE:
   Be sure to use the recommended product or the substitute product for manual transmission oil. (Refer to MT - 4)
   (2) Install the needle roller bearing and the counter shaft 3rd gear.

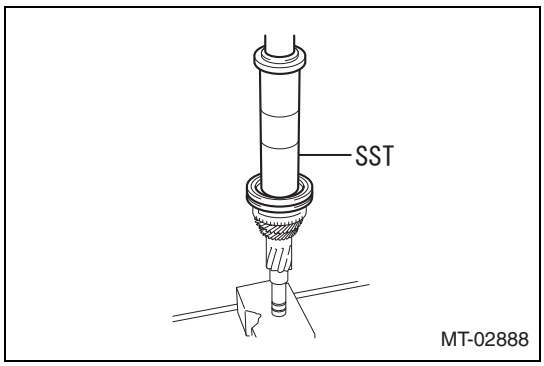

3. Installation of transmission clutch hub No.2
   (1) Install the synchronizer ring set No.3 to the counter shaft 3rd gear.
   - Align the middle ring claw with the gear groove.
   - Align the inner ring claw with the outer ring claw groove.
   (2) Use the SST to install the transmission clutch hub No.2.
   SST 18654AA000, 398477703
   CAUTION:
   Check the position of the synchronizer ring set No.3.
   NOTE:
   - Press-fit the transmission clutch hub No.2 until it contacts the counter shaft.
   - After the press-fitting, check that the synchronizer ring set No.3 moves in the thrust direction.

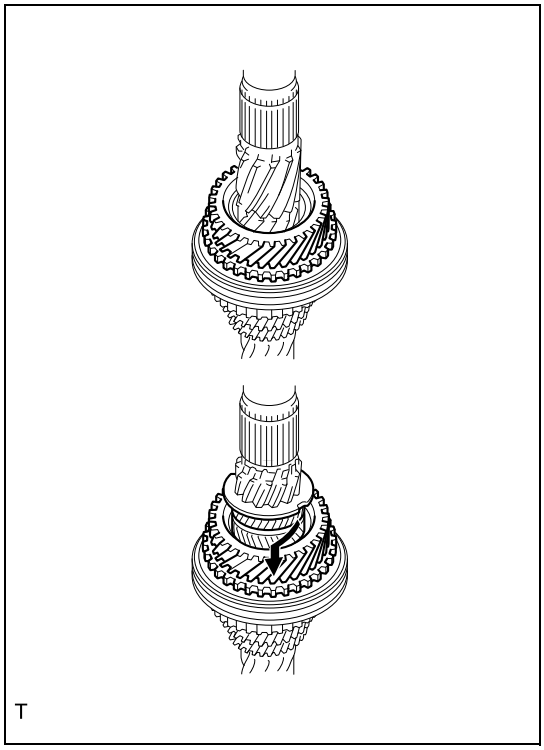
T

4. Installation of counter shaft 4th gear
   (1) Install the synchronizer ring No.1 to the transmission clutch hub No.2.
   (2) Apply manual transmission oil to the 4th gear bearing inner race, and the inner surface and the tapered cone portion of the counter shaft 4th gear.
   NOTE:
   Be sure to use the recommended product or the substitute product for manual transmission oil. (Refer to MT - 4)
   (3) Install the counter shaft 4th gear and 4th gear bearing inner race.
   NOTE:
   Install the 4th gear bearing inner race by turning it clockwise along the gear.

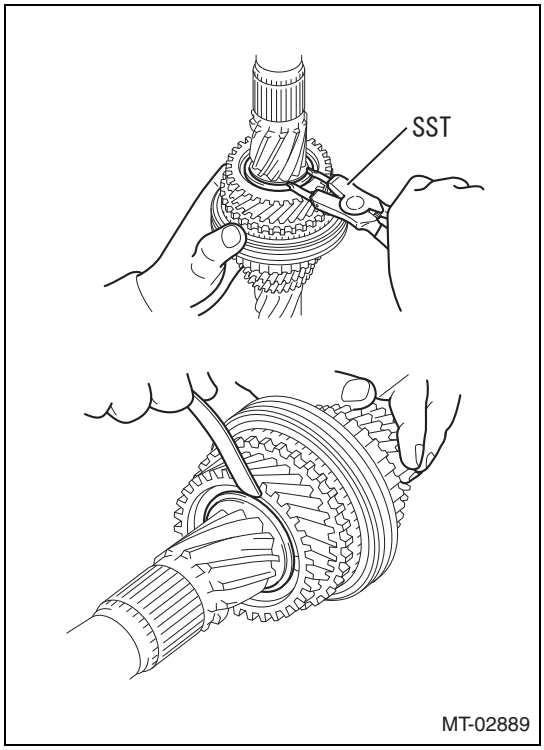

MT-02889

5. Installation of 4th inner race thrust washer
   (1) Select a 4th inner race thrust washer so that the thrust clearance between the 4th gear bearing inner race and the 4th inner race thrust washer is within the standard value.
   Standard value: 0 to 0.1 mm {0 to 0.00394 in}
   NOTE:
   Select a 4th inner race thrust washer with the maximum thickness that can be installed.

Type of 4th inner race thrust washer

Item number	Thickness mm {in}	Identification mark
17002AA090	3.75 {0.14763}	A
17002AA100	3.80 {0.14960}	B
17002AA110	3.85 {0.15157}	C
17002AA120	3.90 {0.15354}	D
17002AA130	3.95 {0.15551}	E
17002AA140	4.00 {0.15748}	F
17002AA150	4.05 {0.15944}	G
17002AA160	4.10 {0.16141}	H

   (2) Use the SST to install a new 4th inner race thrust washer, a new 4th washer retaining ring, and a new shaft snap ring to the counter shaft.
   SST 499895400

MT

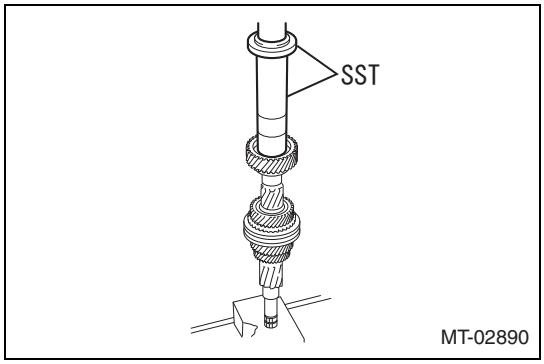

6. Installation of counter drive gear
   (1) Use the SST to install the counter drive gear.
   SST 499277000, 398477703

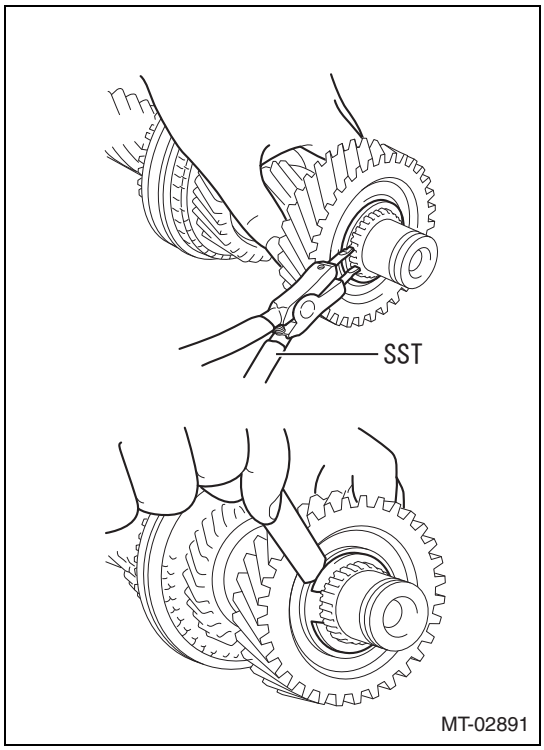

7. Installation of shaft snap ring (transmission clutch hub No.3)
   (1) Select a shaft snap ring so that the thrust clearance between the counter drive gear and the shaft snap ring is within the standard value.
   Standard value: 0 to 0.1 mm {0 to 0.00394 in}
   NOTE:
   Select a shaft snap ring with the maximum thickness that can be installed.

Shaft snap ring type

Item number	Thickness mm {in}	Identification mark
17005AA520	1.80 {0.07086}	A
17005AA530	1.85 {0.07283}	B
17005AA540	1.90 {0.07480}	C
17005AA550	1.95 {0.07677}	D
17005AA560	2.00 {0.07874}	E
17005AA570	2.05 {0.08070}	F

   (2) Use the SST to install a new shaft snap ring to the counter shaft.
   SST 499895400

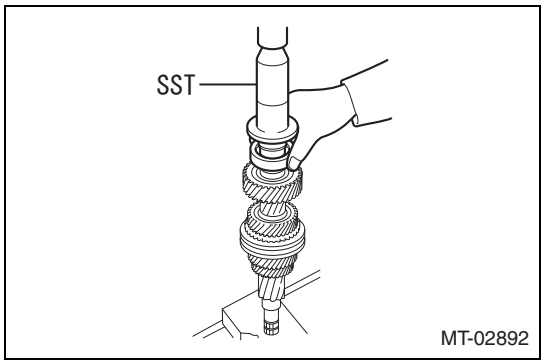

8. Installation of counter gear front bearing
   (1) Use the SST to install a new counter gear front bearing while holding it by hand.
   SST 498057300

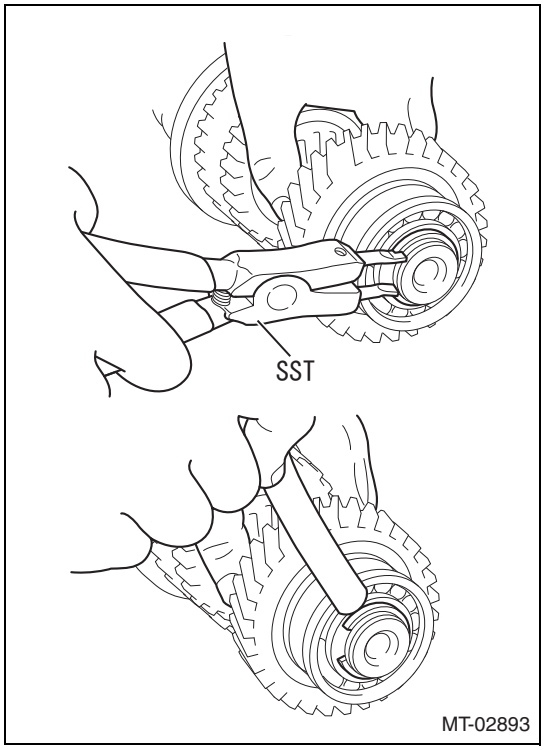

9. Installation of shaft snap ring (counter gear front bearing)
   (1) Select a shaft snap ring so that the thrust clearance between the counter gear front bearing and the shaft snap ring is within the standard value.
   Standard value: 0 to 0.1 mm {0 to 0.00394 in}
   NOTE:
   Select a shaft snap ring with the maximum thickness that can be installed.

Shaft snap ring type

Item number	Thickness mm {in}	Identification mark
17005AA310	2.05 {0.08070}	1
17005AA290	2.10 {0.08267}	2
17005AA320	2.15 {0.08464}	3
17005AA300	2.20 {0.08661}	4
17005AA330	2.25 {0.08858}	5
17005AA340	2.30 {0.09055}	6

   (2) Use the SST to install a new shaft snap ring to the counter shaft.
   SST 499895400

Drive shaft / propeller shaft

Drive shaft system
Symptom table DP-2

Rear drive shaft ASSY
Exploded view DP-3
Removal DP-5
Disassembly DP-6
Inspection DP-7
Assembly DP-7
Installation DP-11

Propeller shaft system
Symptom table DP-13

Propeller shaft ASSY
Exploded view DP-14
Removal DP-14
Inspection DP-15
Installation DP-16

Drive shaft system

Symptom table

NOTE:

Use the following table to identify the trouble cause. Check each part, and repair or replace it if necessary.

Drive shaft system

Symptoms	Inspection items	Reference pages
Noise from the rear underbody	Rear drive shaft ASSY	DP - 7

Rear drive shaft ASSY

Exploded view

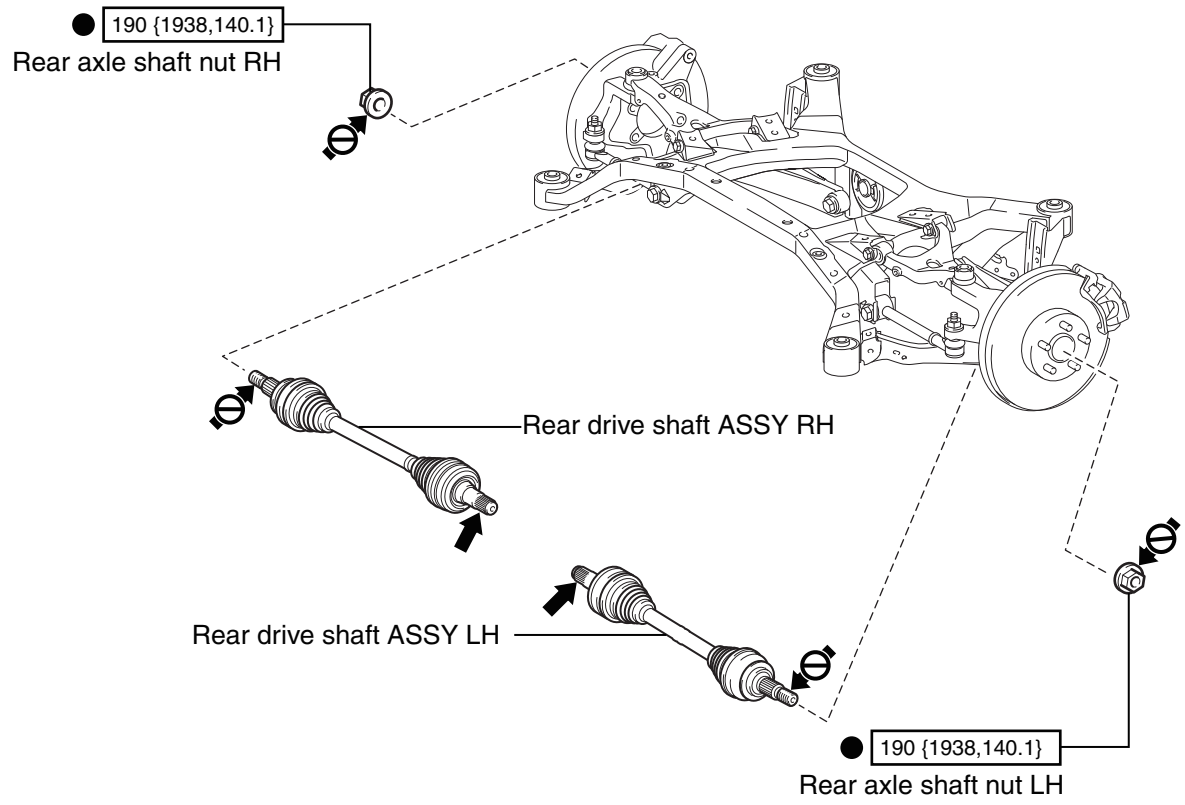

N*m {kgf*cm,ft*lbf}: Tightening torque

● Non-reusable parts

Differential oil

No oil on the threaded portions

DS-00740

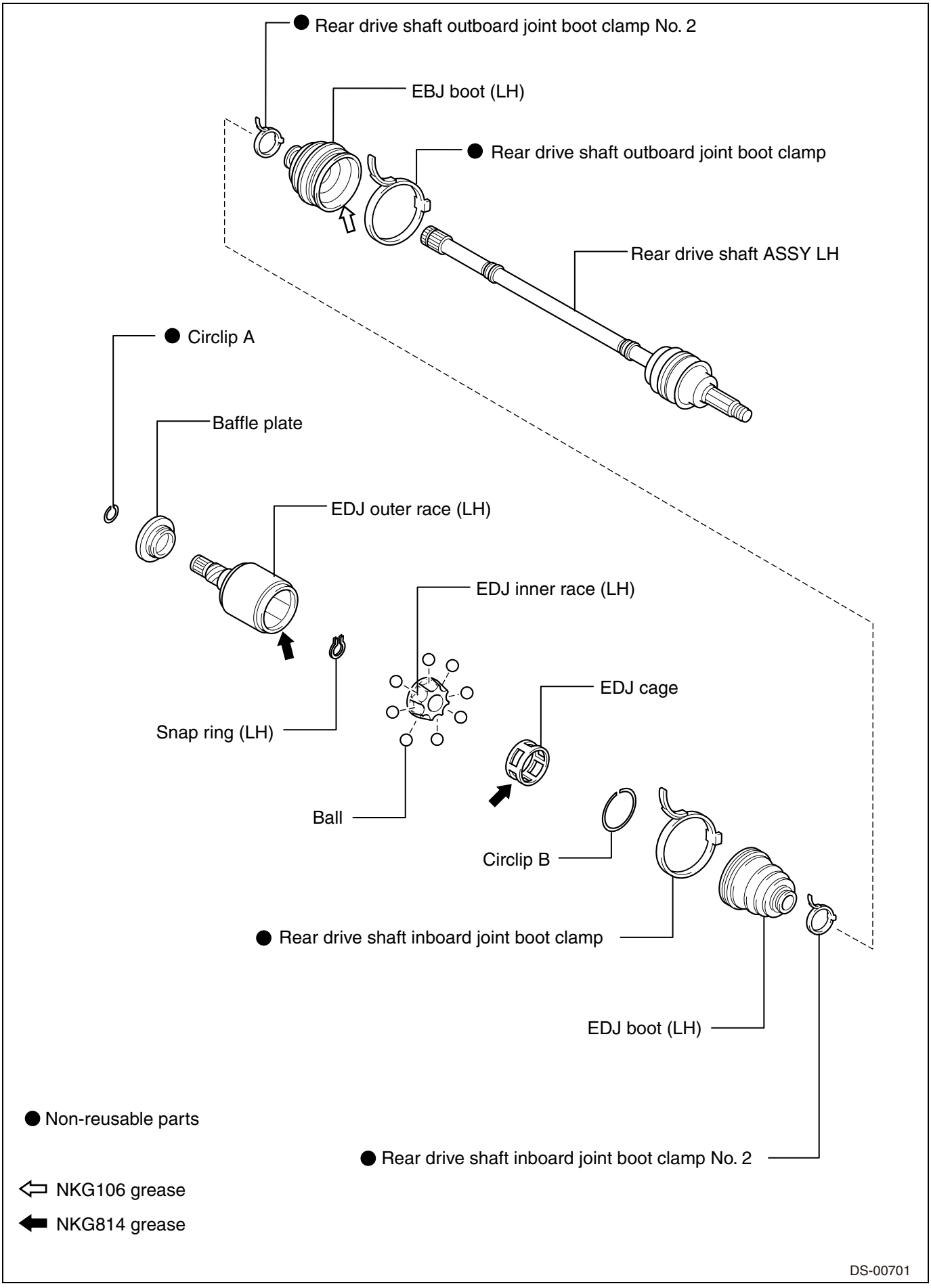
● Rear drive shaft outboard joint boot clamp No. 2
EBJ boot (LH)
● Rear drive shaft outboard joint boot clamp
Rear drive shaft ASSY LH
● Circlip A
Baffle plate
EDJ outer race (LH)
EDJ inner race (LH)
EDJ cage
Snap ring (LH)
Ball
Circlip B
● Rear drive shaft inboard joint boot clamp
EDJ boot (LH)
● Non-reusable parts
● Rear drive shaft inboard joint boot clamp No. 2
⇦ NKG106 grease
⬅ NKG814 grease
DS-00701

DP

Removal

1. Lift up the vehicle, and then remove the rear wheels.

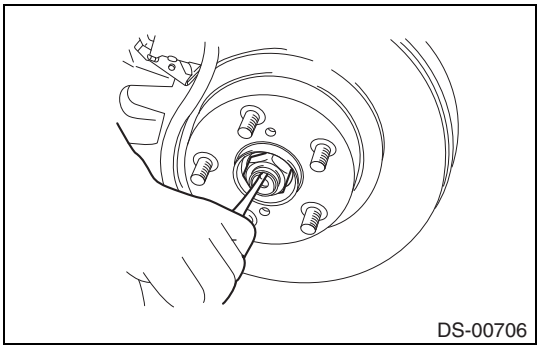
DS-00706

2. Remove the rear axle shaft nut.
   CAUTION:
   Do not loosen the rear axle shaft nut with the rear axle loaded. Doing so may damage the rear axle hub & bearing ASSY.
   (1) Lift the crimped section of the rear axle shaft nut.
   (2) Using a socket wrench, remove the rear axle shaft nut while depressing the brake pedal.
3. Drain differential gear oil. (Refer to AD - 35)
4. Remove the propeller shaft. (Refer to DP - 14)

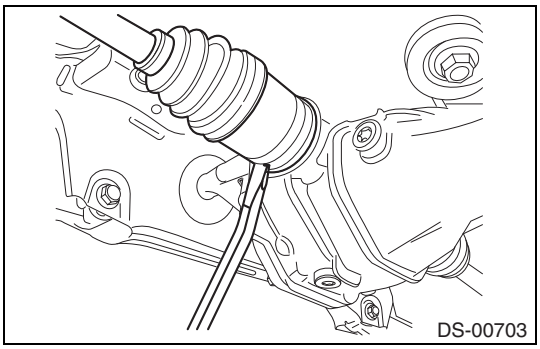
DS-00703

5. Loosen the joint of rear differential carrier ASSY and rear drive shaft ASSY.
   Using a tool such as a crowbar, loosen the rear drive shaft ASSY attached to the rear differential carrier ASSY as shown in the figure.
   CAUTION:
   If a crowbar, etc. contacts the cover, the cover may be damaged. A crowbar, etc. is allowed to contact the differential carrier.
6. Disconnect the installation section of rear differential carrier ASSY.
   (1) Support the rear differential carrier ASSY with a transmission jack.

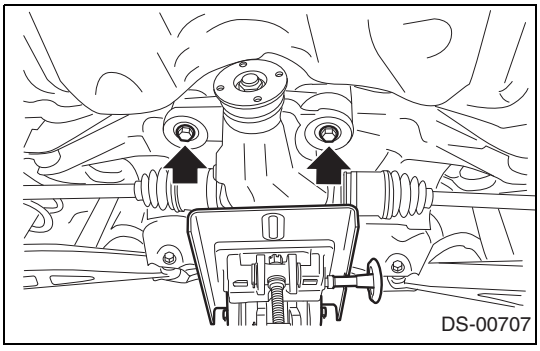
DS-00707

   (2) Remove 2 bolts which hold the front side of the rear differential carrier ASSY from the rear suspension member SUB-ASSY.

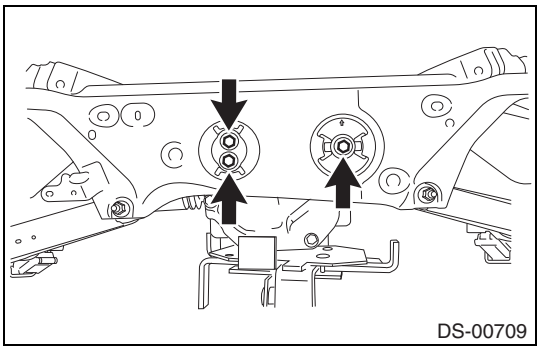
DS-00709

   (3) Remove 3 bolts securing the rear differential carrier ASSY to the rear suspension member SUB-ASSY.

DP

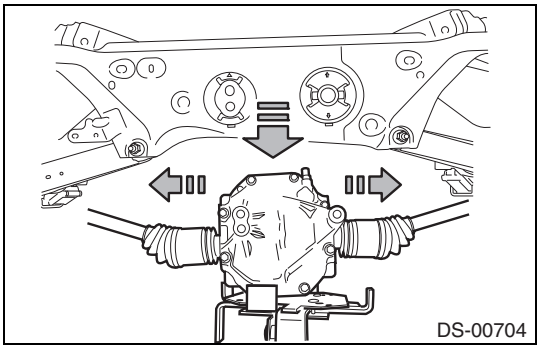

7. Completely pull out the rear drive shaft ASSY while lowering the rear differential carrier ASSY.
   CAUTION:
   Be careful not to damage the boot.

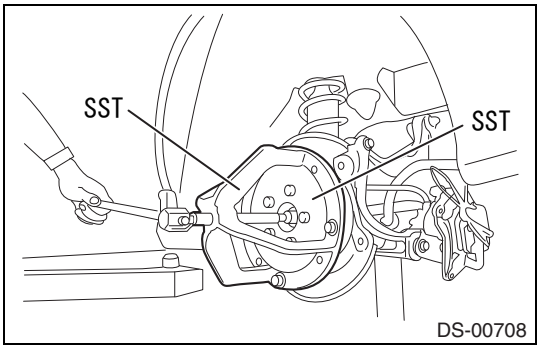

8. Remove the rear drive shaft ASSY from the rear axle carrier.
   NOTE:
   If it is hard to be removed, use the SST.
   SST 926470000, 28099PA110

Disassembly

NOTE:

- The following procedure is for LH side.
- Perform the same procedures for the RH and LH side.

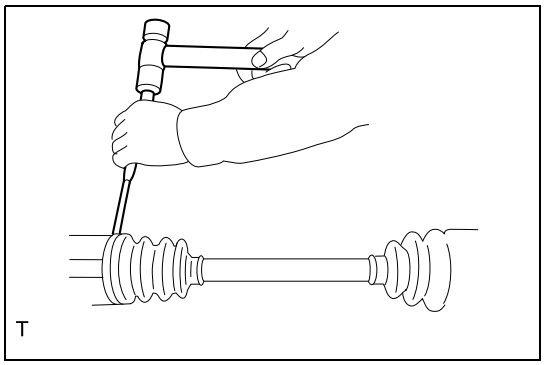

1. Removal of rear drive shaft inboard joint boot clamp NO. 2
   (1) Using a flat tip screwdriver or pliers, loosen the rear drive shaft inboard joint boot clamp NO. 2.
   CAUTION:
   Be careful not to damage the boot.

DP

2. Removal of rear drive shaft inboard joint boot clamp
   NOTE:
   For the rear drive shaft inboard joint boot clamp, perform the same procedure as the rear drive shaft inboard joint boot clamp NO. 2.
3. Removal of rear drive shaft outboard joint boot clamp NO. 2
   NOTE:
   For the rear drive shaft outboard joint boot clamp NO. 2, perform the same procedure as the rear drive shaft inboard joint boot clamp NO. 2.
4. Removal of rear drive shaft outboard joint boot clamp
   NOTE:
   For the rear drive shaft outboard joint boot clamp, perform the same procedure as the rear drive shaft inboard joint boot clamp NO. 2.

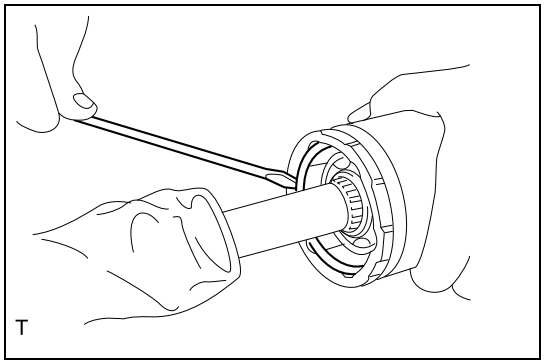

5. Removal of snap ring (LH)
   (1) Remove the round snap ring at the neck of EDJ outer race with a flat tip screwdriver.

6. Removal of EDJ outer race (LH)
   (1) Remove the EDJ outer race from shaft ASSY.

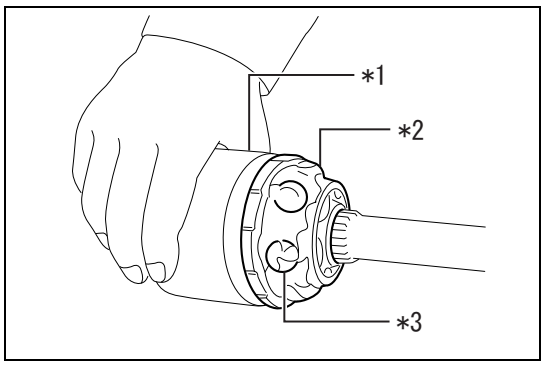

   (2) Wipe off grease and take out the ball.

Captions in illustration

*1	EDJ outer race
*2	Grease
*3	Ball (8 pieces)

CAUTION:
The grease is a special grease (exclusively provided for constant velocity joints). Do not mix with other greases.
NOTE:
Disassemble the parts taking care not to lose balls.

   (3) In order to remove the cage from inner race, turn the cage by a half pitch to the track groove of inner race and shift the cage.

7. Removal of EDJ inner race (LH)
   (1) Using pliers, remove the snap ring fixing the inner race to the shaft.
   (2) Remove the EDJ inner race.

8. Removal of EDJ boot (LH)
   (1) Remove the EDJ cage from shaft, and then remove the EDJ boot.
   CAUTION:
   Wrap shaft splines with vinyl tape to protect the EDJ boot from scratches.

9. Removal of EBJ boot (LH)
   (1) Remove the EBJ boot using the same procedures as for the EDJ boot.
   NOTE:
   The EBJ is a non-disassembly part, so the drive shaft disassembly stops here.

Inspection

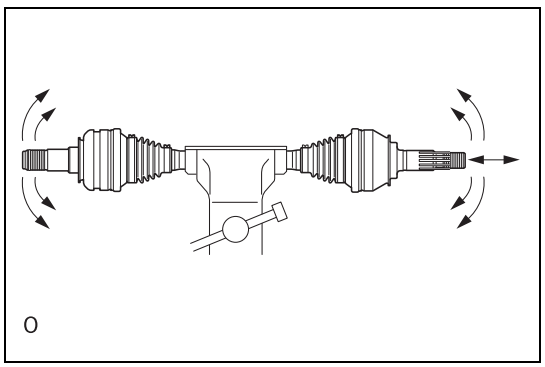

1. Inspection of rear drive shaft ASSY
   (1) Check that the joint portion works smoothly and there is no excessive play by moving the joint portion up/down, to the right/left and in the axial direction.
   (2) Check each joint boot for cracks, damage or grease leakage.
   CAUTION:
   Carry the drive shaft ASSY while keeping it horizontally.

Assembly

NOTE:

- The following procedure is for LH side.

• Perform the same procedures for the RH and LH side.

1. Installation of EBJ boot (LH)
   (1) Wrap vinyl tape around the shaft splines.
   CAUTION:
   Wrap shaft splines with vinyl tape to protect the boot from scratches.
   (2) Install the EBJ boot to the specified position, and fill it with NKG106 grease.
   Standard value: 50 to 60g{1.76 to 2.12 oz}
2. Installation of EDJ boot (LH)
   (1) Place the EDJ boot at the center of shaft.

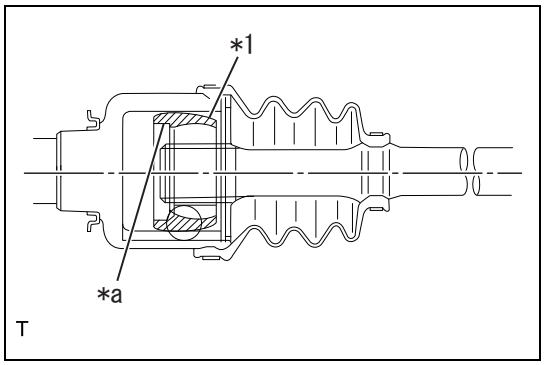

   (2) Insert the EDJ cage into shaft.

Captions in illustration

*1	EDJ cage
*a	Cutout portion

NOTE:
Insert the cage with the cutout portion facing the shaft end, because the EDJ cage has the specified orientation.

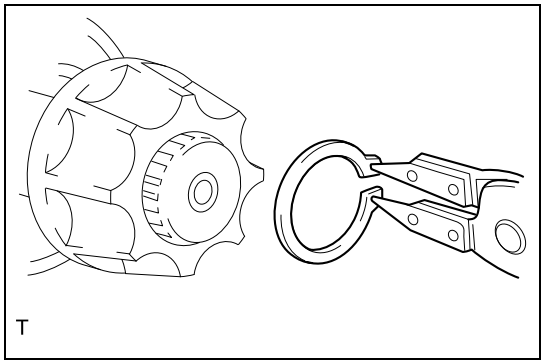

3. Installation of EDJ inner race
   (1) Install the EDJ inner race on shaft and fix the snap ring in place with pliers.
   NOTE:
   Confirm that the snap ring is completely fitted in the shaft groove.

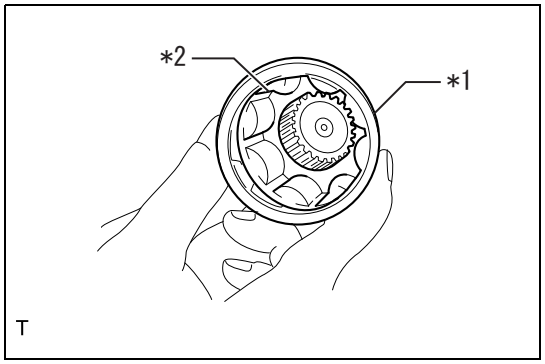

4. Installation of EDJ cage
   (1) Install the EDJ cage to inner race fixed onto the shaft.

Captions in illustration

*1	EDJ cage
*2	Inner race

NOTE:
Fit the cage with the protruding section aligned with the track on the inner race, and turn by a half pitch.

   (2) Fill the inner side of the EDJ outer race with NKG814 grease.
   Standard value: 80 to 90g{2.82 to 3.17 oz}
   (3) Apply a thin coat of specified grease to the cage pocket and ball.
   (4) Insert the ball into the cage pocket.

DP

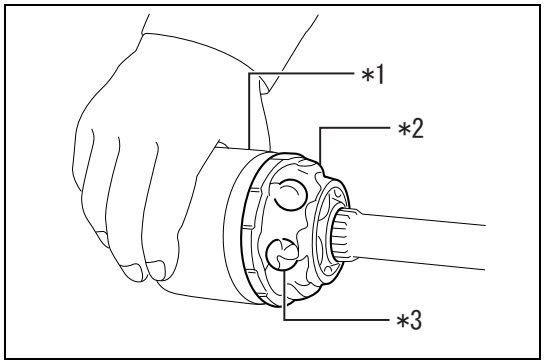

(5) Align the outer race track and ball positions, and place the shaft, inner race, cage and ball in the original positions, and then fix the outer race in place.

Captions in illustration

*1	Outer race
*2	Grease
*3	Ball (8 pieces)

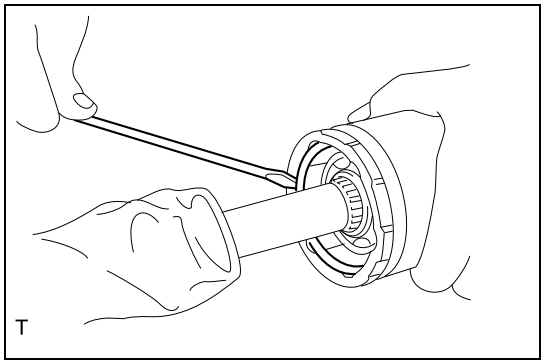

(6) Install the snap ring to the groove on the EDJ outer race.
NOTE:
- Assure that the balls, cage and inner race are completely fitted in the outer race of EDJ.
- Use care not to place the matched position of snap ring in the ball groove of outer race.
- Pull the shaft lightly and assure that the snap ring is completely fitted in the groove.

(7) Apply an even coat of NKG814 grease over the entire inner surface of boot. Also apply grease to the shaft.
Standard value: 20 to 30g{0.71 to 1.06 oz}

(8) Install the EDJ boot taking care not to twist it.
NOTE:
- The inside of the large end of EDJ boot and the boot groove shall be cleaned thoroughly so as to be free from grease and other substances.
- When installing the EDJ boot, position the outer race of EDJ at center of the stroke.

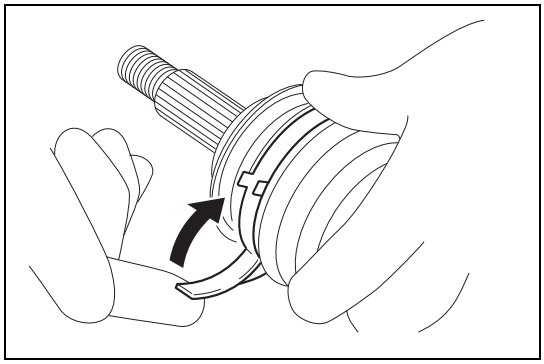

5. Installation of rear drive shaft outboard joint boot clamp NO. 2
(1) Apply lubricants to the inner surface of a new rear drive shaft outboard joint boot clamp NO. 2.
(2) Install the rear drive shaft outboard joint boot clamp NO. 2 to the EDJ boot, and then temporarily bend the lever.
WARNING:
Wear protective gloves during operation. Use extra caution to prevent hands from being injured.
CAUTION:
- When temporarily bending the lever, make sure no bend is found on the band and lever.
- Do not repeat bending the lever many times to prevent the rear drive shaft outboard joint boot clamp NO. 2 from being cut.

(3) While holding the bent lever by hand, bend the buckle.

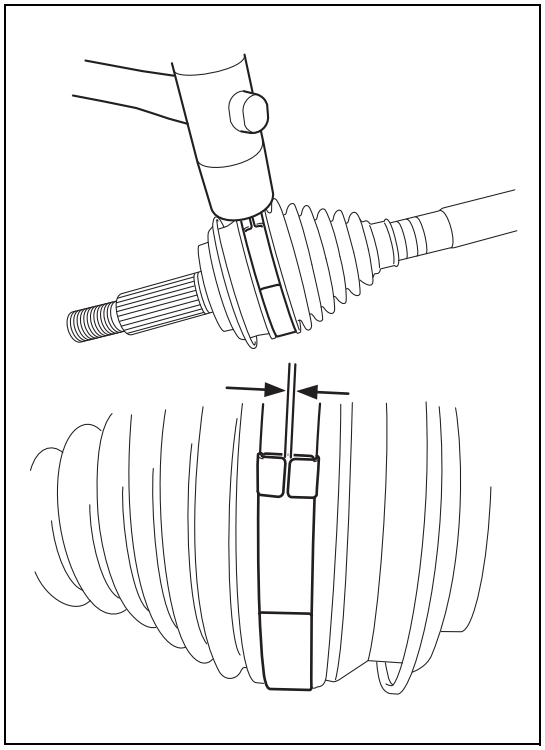

(4) Using a plastic hammer, tap the buckle to secure.
CAUTION:
- Do not tap the buckle excessively with a plastic hammer.
- Install the lever so that there is no lifting portion.
- Make sure that the gap between 2 buckles becomes parallel.

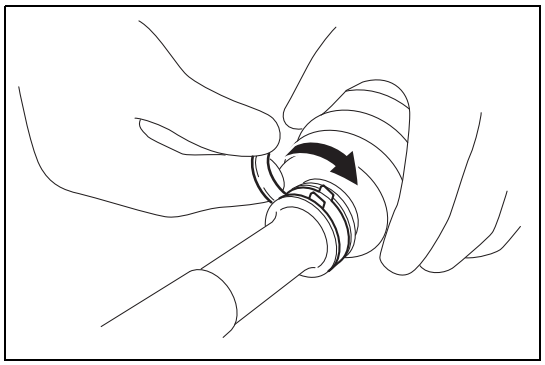

6. Installation of rear drive shaft outboard joint boot clamp
(1) Install a new rear drive shaft outboard joint boot clamp to the outboard joint boot, and then temporarily bend the lever.
WARNING:
Wear protective gloves during operation. Use extra caution to prevent hands from being injured.
CAUTION:
- When temporarily bending the lever, make sure no bend is found on the band and lever.
- Do not repeat bending the lever many times to prevent the rear drive shaft outboard joint boot clamp from being cut.

(2) While holding the bent lever by hand, bend the buckle.

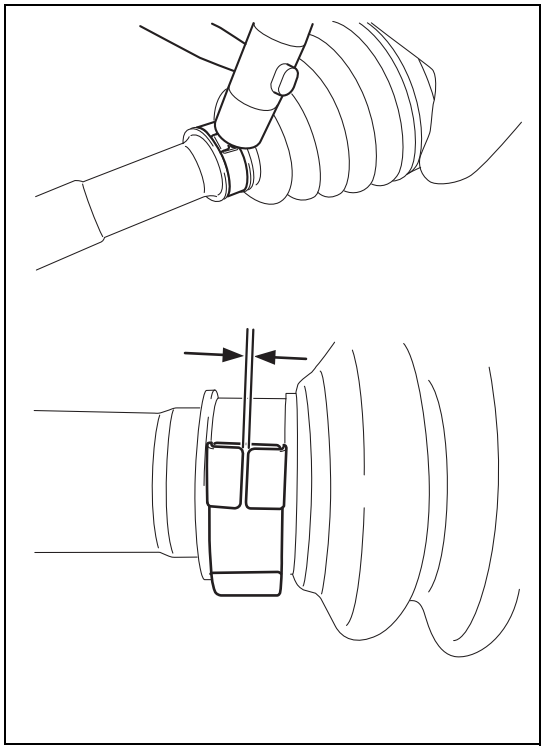

(3) Using a plastic hammer, tap the buckle to secure.
CAUTION:
- Do not tap the buckle excessively with a plastic hammer.
- Install the lever so that there is no lifting portion.
- Make sure that the gap between 2 buckles becomes parallel.

7. Installation of rear drive shaft inboard joint boot clamp NO. 2
NOTE:
For the rear drive shaft inboard joint boot clamp NO. 2, perform the same procedure as the rear drive shaft outboard joint boot clamp NO. 2.

8. Installation of rear drive shaft inboard joint boot clamp
NOTE:
For the rear drive shaft inboard joint boot clamp, perform the same procedure as the rear drive shaft outboard joint boot clamp.

DP

Installation

1. Replace the rear differential side oil seal
NOTE:
After pulling out the axle shaft ASSY, be sure to replace with a new oil seal.

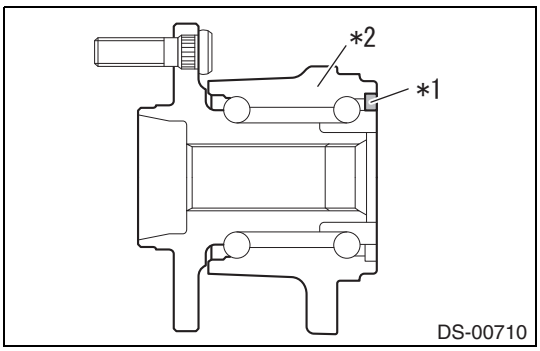

2. Insert the axle shaft ASSY into the rear hub spline, and pull it into the specified position
CAUTION:
- Be careful not to damage the magnetic encoder.
- Do not bring the magnetized tool closer to the magnetic encoder.
- Do not tap the axle shaft using a hammer when installing axle shaft ASSY.

Captions in illustration

*1	Magnetic encoder
*2	Rear axle hub & bearing ASSY

3. Temporarily tighten the rear axle shaft nut

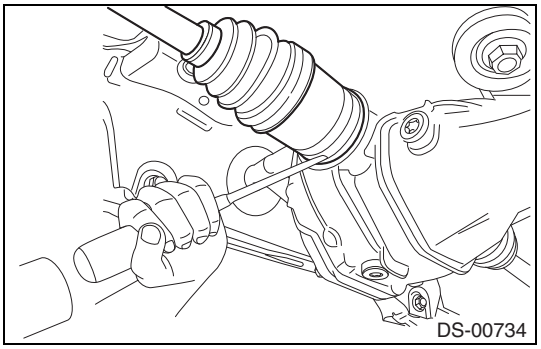

4. Install the rear axle shaft ASSY to the rear differential
5. Install the rear differential ASSY to the rear suspension member SUB ASSY
   CAUTION:
   Be sure to use a new self-locking nut.
   Standard value: T=62 N·m {632 kgf·cm} {45.7 ft-lbf}
   Differential ASSY to rear side of rear differential mount cushion (3 bolts)
   Standard value: T=95 N·m {969 kgf·cm} {70.1 ft-lbf}
   Differential ASSY to front side of rear suspension member SUB ASSY (2 bolts)
6. While pressing the brake pedal, tighten the new axle nuts to the specified torque
   CAUTION:
   Do not apply load to the rear axle before tightening the rear axle shaft nut. Doing so may damage the rear axle hub & bearing ASSY.
   Standard value:T=190N·m {1937kgf·cm} {140.1 ft-lbf}

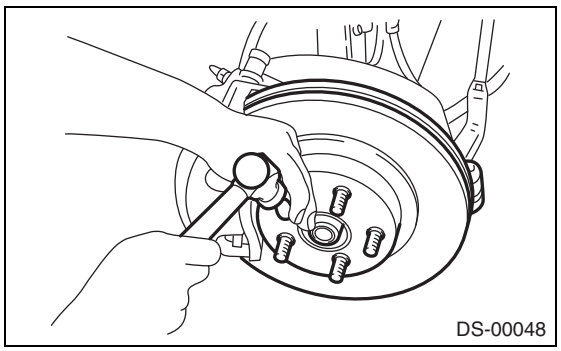

7. Crimp and lock the rear axle shaft nut securely
8. Fill with differential gear oil
9. Install the rear wheels.
   Standard value:T=120N·m {1224kgf·cm} {88.5 ft-lbf}

DP

Propeller shaft system

Symptom table

NOTE:

Use the following table to identify the trouble cause. Check each part, and repair or replace it if necessary.

Propeller shaft system

Symptoms	Inspection items	Reference pages
Noise or vibration from propeller shaft ASSY	Center bearing (wear/play)	DP - 16
	Propeller shaft (runout)	DP - 15
	Universal joint spider	DP - 16

Propeller shaft ASSY

Exploded view

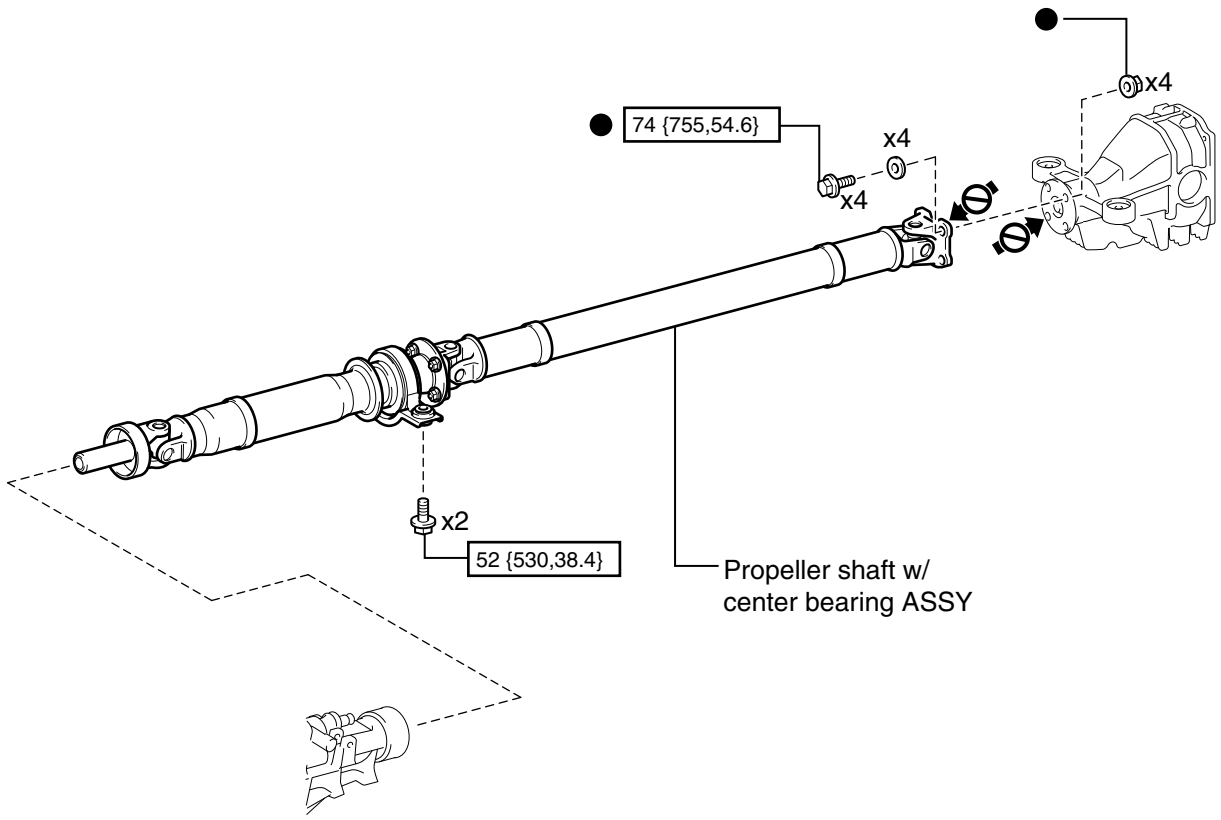

N•m {kgf•cm, ft•lbf} : Tightening torque

● Non-reusable parts

No oil is attached.

DS-00724

Removal

1. Draining of manual transmission oil (Transmission M/T) (Refer to MT - 4)
2. Draining of automatic transmission fluid (Transmission A/T) (Refer to AT - 161)
3. Removal of exhaust pipe ASSY CTR (Refer to IE - 41)

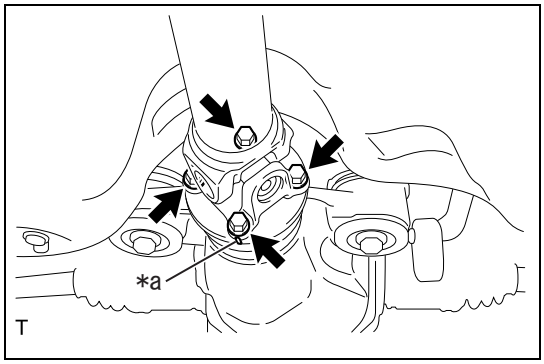

4. Removal of propeller shaft W/ center bearing ASSY
   (1) Place alignment marks on the differential side companion flange and flexible coupling.

Captions in illustration

*a	Alignment marks

   (2) Remove 4 bolts, 4 washers and 4 nuts.

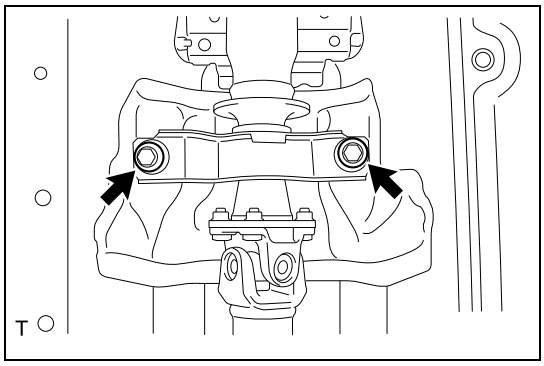

   (3) Remove the 2 bolts.

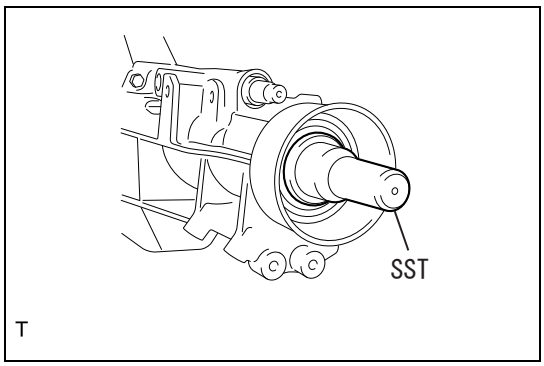

   (4) Remove the propeller shaft W/ center bearing ASSY from the extension housing, and insert the SST into the extension housing to prevent oil leakage. (Transmission M/T)
   SST 09325-20010
   CAUTION:
   - Do not apply excessive force to the parts such as the universal joint during removal.
   - Do not damage the oil seal.

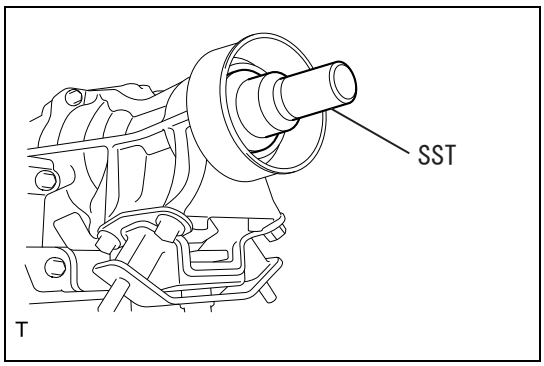

   (5) Remove the propeller shaft ASSY from the extension housing, insert the SST into the extension housing to prevent oil leakage. (Transmission A/T)
   SST 09325-40010
   CAUTION:
   - Do not apply excessive force to the parts such as the universal joint during removal.
   - Do not damage the oil seal.

Inspection

1. Inspection of propeller shaft W/ center bearing ASSY
   (1) Set the dial gauge with its gauge head at the center of the propeller shaft W/ center bearing ASSY.

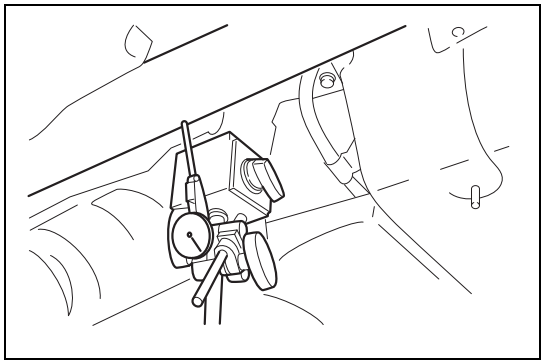

(2) Turn the propeller shaft W/ center bearing ASSY slowly by hand to check for runout.
Limit: 0.6mm {0.0236in}
CAUTION:
Attach the dial gauge at a right angle to the center of the propeller shaft W/ center bearing ASSY.

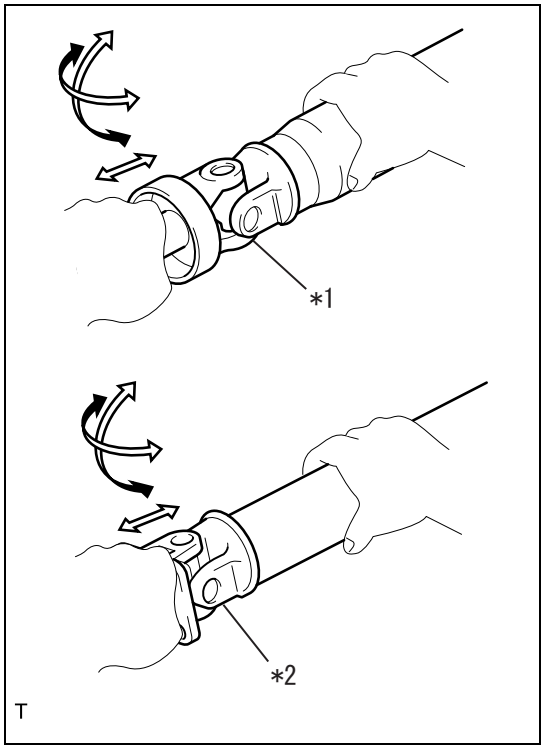

2. Inspection of universal joint spider ASSY
(1) Rotate the spider to check there is no drag.
(2) Strongly shake the spider in the axial and transverse directions with both hands to check there is no play in the joint.

Captions in illustration

*1	Front side spider
*2	Rear side spider

T

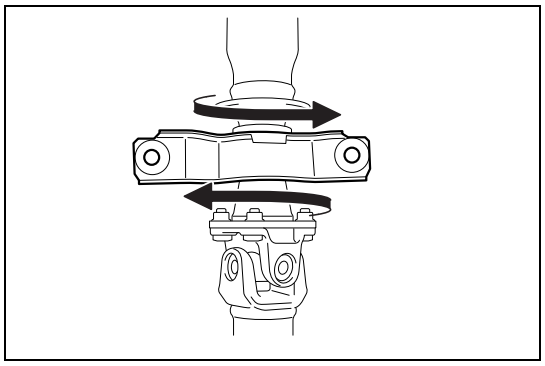

3. Inspection of center bearing ASSY
(1) Check there is no play and drag by rotating the bearing.
(2) Check the rubber part for damage or cracks and the spring for dislocation.
(3) Check the bracket part of the center bearing for cracks or deformation.

Installation

1. Installation of propeller shaft W/ center bearing ASSY
(1) Clean and remove oil, etc. completely from the joint of the rear differential flange.
(2) Remove the SST from the extension housing.
(3) Insert the propeller shaft W/ center bearing ASSY into the extension housing.

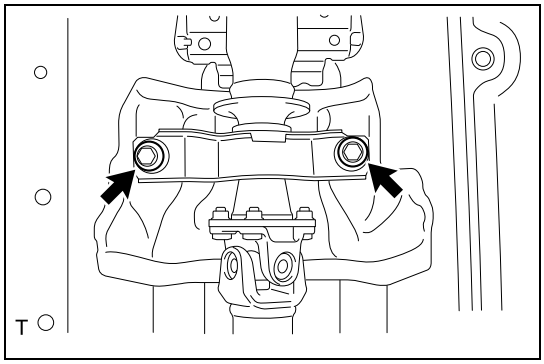

(4) Install the center support bearing bracket of the propeller shaft center bearing ASSY using 2 bolts.
Standard value:T=52N·m {530kgf·cm} {38.4ft·lbf}

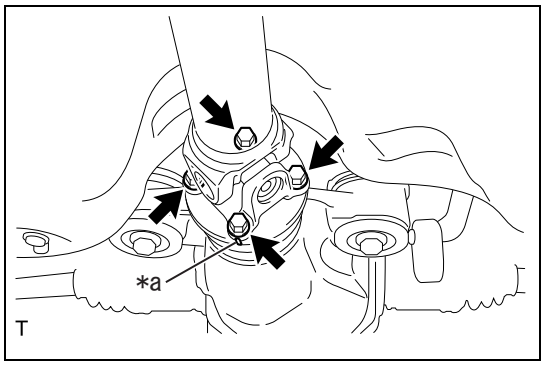

(5) Align the alignment marks on the differential side companion flange and flexible coupling.

Captions in illustration

*a	Alignment marks

(6) Install with 4 bolts, 4 washers and 4 nuts.
CAUTION:
Secure the nut and turn the bolt.
Standard value:T=74N·m {755kgf·cm} {54.6ft·lbf}

2. Filling of manual transmission oil (Transmission M/T) (Refer to MT - 4)
3. Inspection of manual transmission oil leakage (Transmission M/T) (Refer to MT - 4)
4. Filling of automatic transmission fluid (Transmission A/T) (Refer to AT - 164)
5. Adjustment of automatic transmission fluid level (Transmission A/T) (Refer to AT - 165)
6. Installation of exhaust pipe ASSY CTR (Refer to IE - 44)

Axle / differential

Axle system
Symptom table AD-3

Front axle hub bolt
Exploded view AD-4
Replacement AD-4

Front axle hub
Exploded view AD-6
Removal AD-6
Installation AD-7
On-vehicle inspection AD-7

Steering knuckle
Exploded view AD-9
Removal AD-10
Installation AD-12

Rear axle hub bolt
Exploded view AD-13
Replacement AD-13

Rear axle hub
Exploded view AD-15
Removal AD-15
Installation AD-16
On-vehicle inspection AD-17

Rear axle carrier
Exploded view AD-19
Removal AD-19
Disassembly AD-21
Assembly AD-22
Installation AD-23

Differential system
Precautions AD-25
Symptom table AD-25

Differential oil
Adjustment AD-26

Rear differential carrier oil seal
Exploded view AD-27
Replacement AD-27

Rear differential side gear shaft oil seal
Exploded view AD-30
Replacement AD-30

Rear differential carrier ASSY
Exploded view AD-32
Removal AD-35

Disassembly AD-36
Assembly AD-47
Installation AD-65

Rear differential mount cushion

Exploded view AD-67
Removal AD-67
Installation AD-69

Axle system

Symptom table

NOTE:

Use the following table to identify the trouble cause. The check points are listed in the order of priority from the viewpoint of possible trouble causes. Check each part in the sequence. If necessary, replace the parts.

Axle system

Symptoms	Inspection items	Reference pages
Wobble of the vehicle	Tire (improper tire pressure, uneven wear)	TW - 2
	Front wheel alignment (improper)	AL - 2
	Rear wheel alignment (improper)	AL - 7
	Steering linkage (looseness/wear)	SL - 6
	Front hub bearing (wear/play)	AD - 7
	Front stabilizer bar (bend/damage)	FP - 21
Abnormal vibration of front wheel	Wheels (out of balance)	TW - 2
	Front shock absorber (spongy)	FP - 11
	Front wheel alignment (improper)	AL - 2
	Front lower ball joint (wear/play)	FP - 17
	Front hub bearing (wear/play)	AD - 7
Noise from the front	Front wheel alignment (improper)	AL - 2
	Front lower ball joint (wear/play)	FP - 17
	Front hub bearing (wear/play)	AD - 7
	Front shock absorber (spongy)	FP - 11
Noise from the rear	Rear hub bearing (wear/play)	AD - 17
	Rear shock absorber (spongy)	RP - 8

Front axle hub bolt

Exploded view

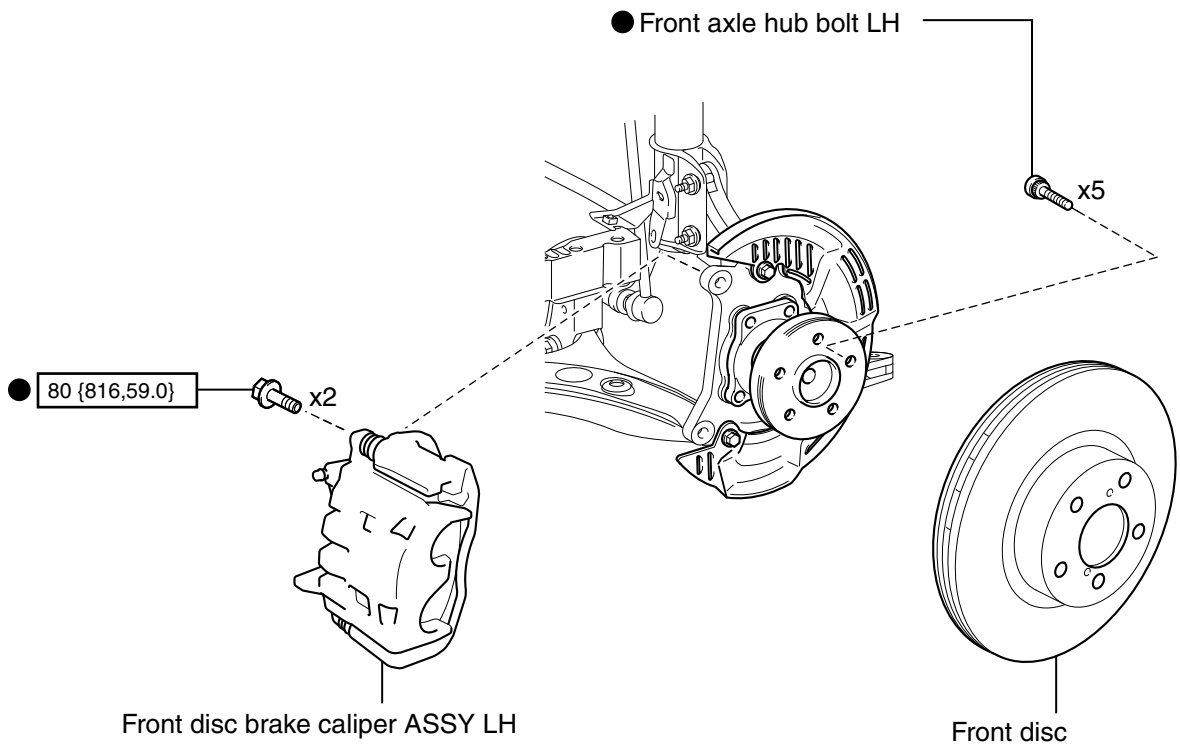

AD

Replacement

NOTE:

- The following procedure is for LH side.
- Perform the same procedures for the RH and LH side.

1. Removal of front tire
2. Removal of front disc brake caliper ASSY LH
   (1) Remove 2 bolts, and disconnect the disc brake caliper ASSY LH from the steering knuckle.
   CAUTION:
   Suspend the caliper using a wire, etc.
3. Removal of front disc (Refer to FB - 8)
4. Removal of front axle hub & bearing ASSY LH
   Using the SST and a hydraulic press, push out the hub bolt from the front axle hub & bearing ASSY.
   CAUTION:
   - Do not hammer the hub bolts. This may deform the front axle hub & bearing ASSY.
   - Do not reuse the hub bolt.

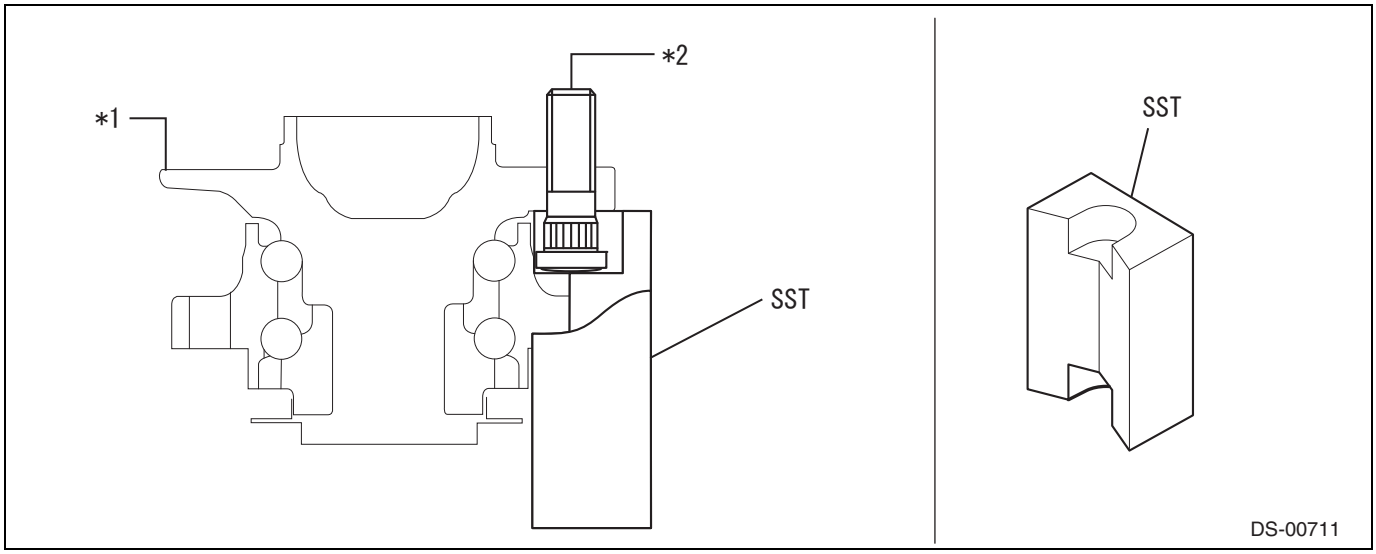

Captions in illustration

*1	Front axle hub & bearing ASSY	*2	Hub bolt

SST 28399AG000

NOTE:

Because the front axle hub & bearing ASSY can not be disassembled, only hub bolts can be removed.

5. Installation of front axle hub & bearing ASSY LH
   (1) Install the front axle hub & bearing ASSY to the SST securely.
   (2) Using a press, press the new hub bolts until their seating surfaces come in contact snugly with the front axle hub & bearing ASSY.

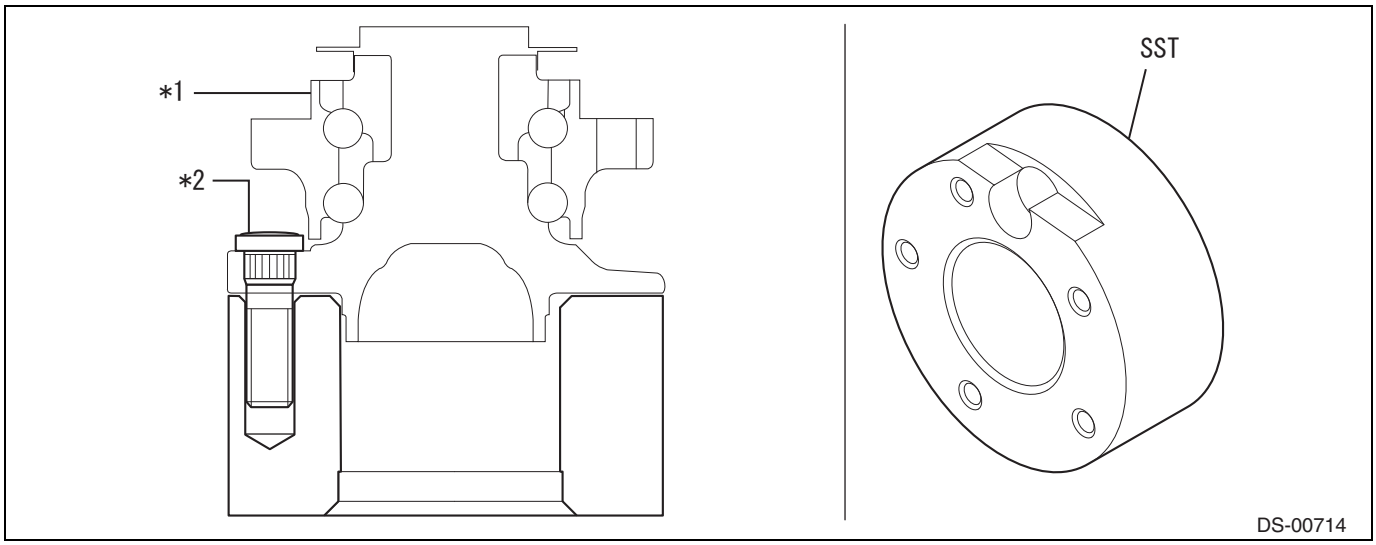

Captions in illustration

*1	Front axle hub & bearing ASSY	*2	Hub bolt

SST 927080000

NOTE:

Use the 12 mm (0.47 in) dia. holes in the SST to prevent bolts from tilting.

6. Installation of front disc (Refer to FB - 14)
7. Installation of front disc brake caliper ASSY LH
   (1) Install the disc brake caliper ASSY LH to the steering knuckle with 2 bolts.
   Standard value:T=80N·m {816kgf·cm} {59.0ft·lbf}
8. Installation of front tire
   Standard value:T=120N·m {1224kgf·cm} {88.5ft·lbf}

Front axle hub

Exploded view

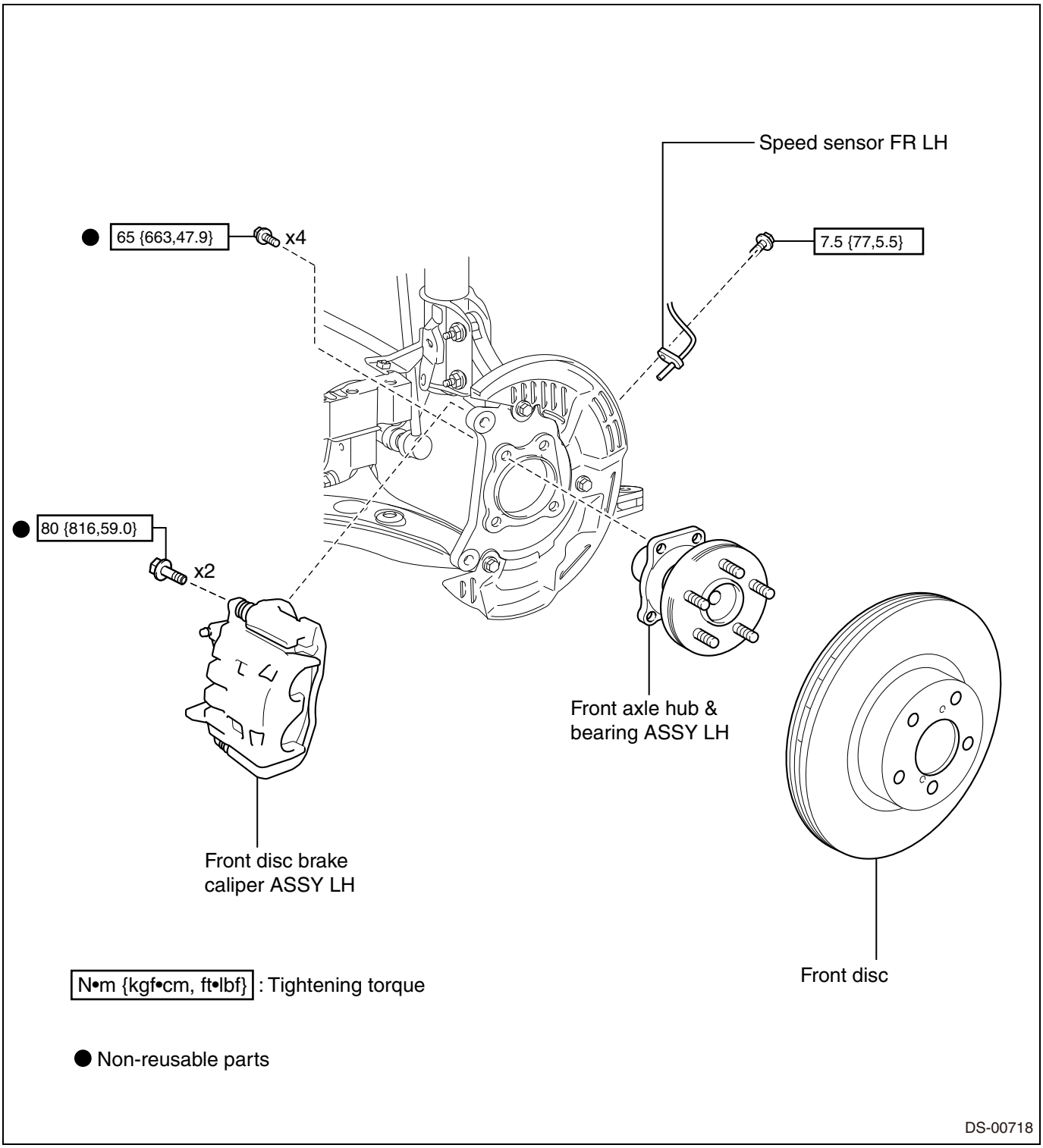

AD

Removal

NOTE:

- The following procedure is for LH side.
- Perform the same procedures for the RH and LH side.

1. Removal of front tire
2. Removal of front disc brake caliper ASSY LH (Refer to AD - 4)

3. Removal of front disc (Refer to FB - 8)

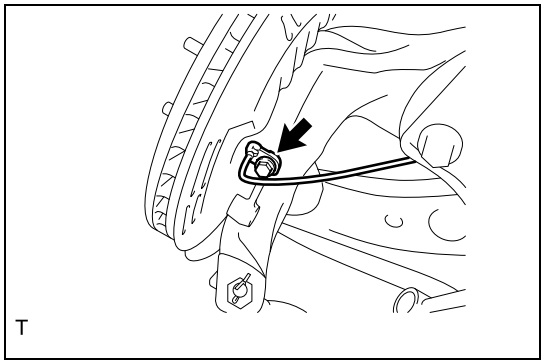

4. Disconnection of speed sensor FR LH
   (1) Remove the bolt, and disconnect the speed sensor FR LH from the steering knuckle.
   CAUTION:
   - Keep the tip and mounting portion of the speed sensor FR LH free from foreign matter.
   - The speed sensor FR LH is easily damaged. When removing the speed sensor FR LH from the front axle hub & bearing ASSY LH, do not apply excessive force or turn the sensor.

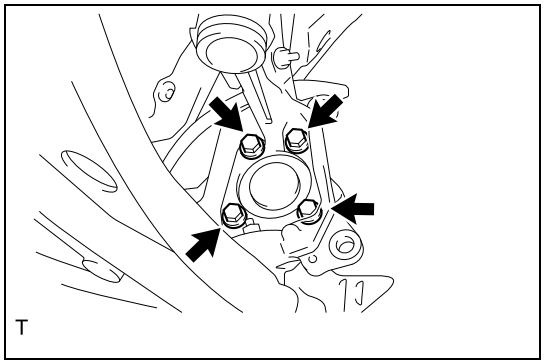

5. Removal of front axle hub & bearing ASSY LH
   (1) Remove 4 bolts, and remove the front axle hub & bearing ASSY from the steering knuckle.

Installation

NOTE:
- The following procedure is for LH side.
- Perform the same procedures for the RH and LH side.

1. Installation of front axle hub & bearing ASSY LH
   (1) Install the front axle hub & bearing ASSY to the steering knuckle with 4 bolts.
   Standard value:T=65N·m {663kgf·cm} {47.9ft·lbf}
2. Inspection of front axle hub & bearing ASSY axial play (Refer to AD - 8)
3. Inspection of front axle hub & bearing ASSY runout (Refer to AD - 8)
4. Installation of speed sensor FR LH
   (1) Install the speed sensor FR LH to the steering knuckle with a bolt.
   Standard value:T=7.5N·m {77kgf·cm} {5.5ft·lbf}
   CAUTION:
   - Do not damage the tip of the speed sensor when installing the speed sensor body.
   - Do not allow foreign matter to attach to the mounting surfaces.
   - Be careful not to twist the speed sensor wire during installation.
5. Installation of front disc (Refer to FB - 14)
6. Installation of front disc brake caliper ASSY LH (Refer to AD - 5)
7. Installation of front tire
   Standard value:T=120N·m {1224kgf·cm} {88.5ft·lbf}
8. Inspection of test mode (speed sensor check) (Refer to BC - 15)

On-vehicle inspection

NOTE:
- The following procedure is for LH side.
- Perform the same procedures for the RH and LH side.

1. Removal of front tire
2. Removal of front disc brake caliper ASSY LH (Refer to AD - 4)
3. Removal of front disc (Refer to FB - 8)

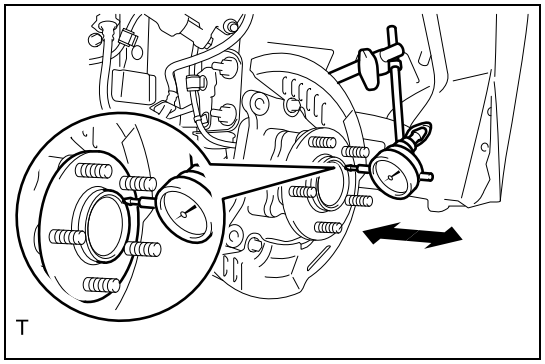

4. Inspection of front axle hub & bearing ASSY axial play
   (1) Inspect axial play of the bearing near the axle hub inner periphery (flange portion) using a dial gauge.
   Limit: 0.05mm {0.00196in}
   CAUTION:
   If it exceeds the limit, replace the front axle hub with a new part.

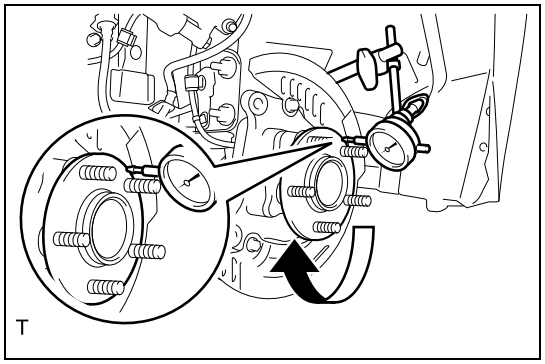

5. Inspection of front axle hub & bearing ASSY runout
   (1) Inspect runout of the axle hub near the axle hub outer periphery using a dial gauge.
   Limit: 0.05mm {0.00196in}
   CAUTION:
   If it exceeds the limit, replace the front axle hub with a new part.

6. Installation of front disc (Refer to FB - 14)
7. Installation of front disc brake caliper ASSY LH (Refer to AD - 5)
8. Installation of front tire
   Standard value:T=120N·m {1224kgf·cm} {88.5ft·lbf}

AD

Steering knuckle

Exploded view

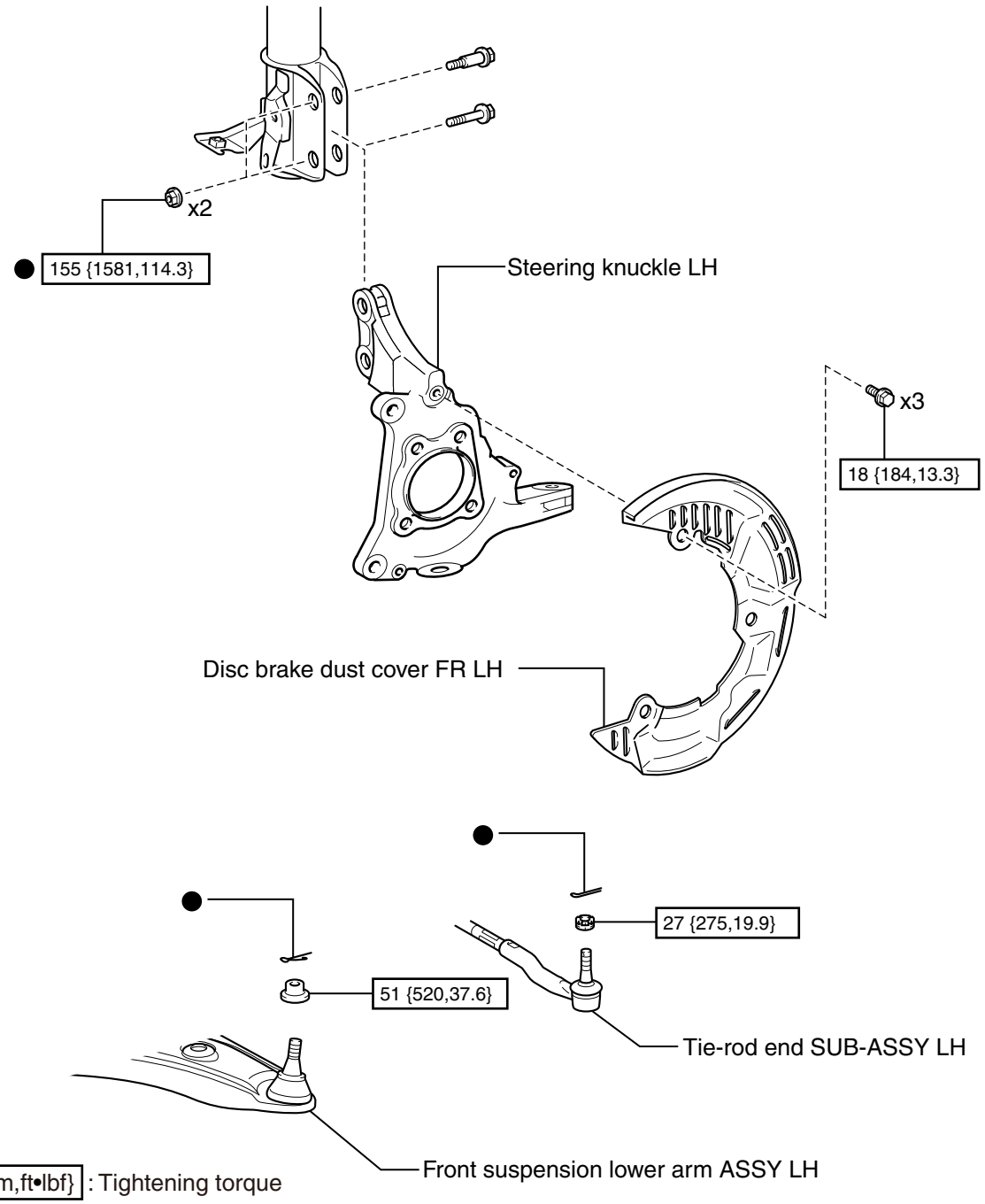

N•m {kgf•cm,ft•lbf} : Tightening torque

● Non-reusable parts

DS-00719

AD

Removal

NOTE:

- The following procedure is for LH side.
- Perform the same procedures for the RH and LH side.

1. Removal of front axle hub LH (Refer to AD - 6)

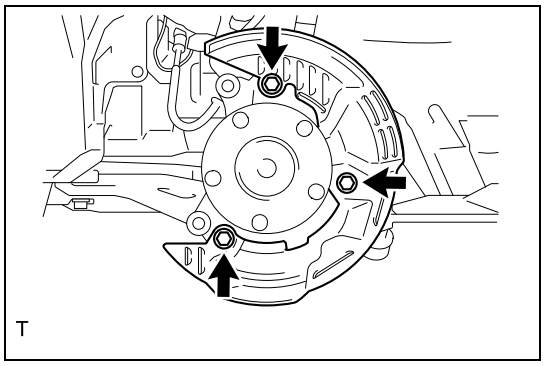

2. Removal of disc brake dust cover FR LH
   (1) Remove 3 bolts, and remove the disc brake dust cover FR LH.

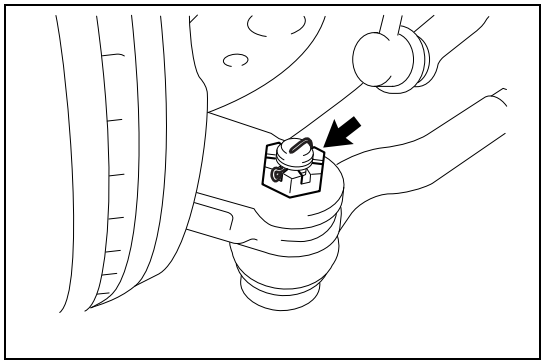

3. Disconnection of tie-rod end SUB-ASSY LH
   (1) Remove the cotter pin, and then remove the castle nut.
   (2) Use a tie-rod ball joint puller to detach the tie-rod end SUB-ASSY LH from the steering knuckle.

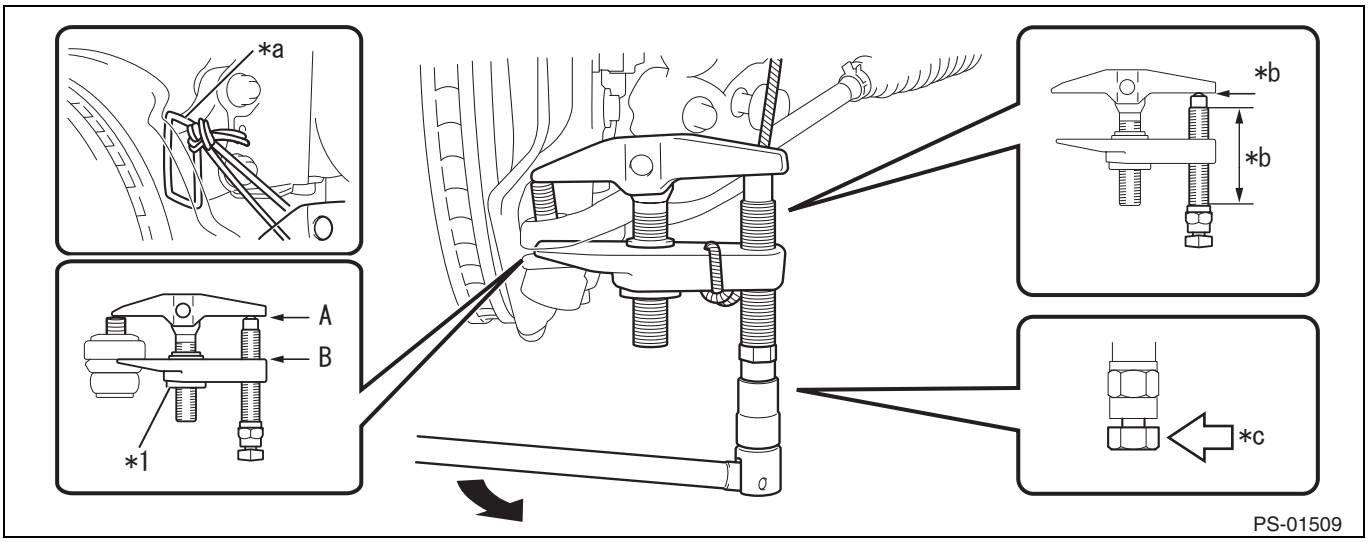

Captions in illustration

*1	Nut	-	-
*a	Tie the string without slack	*b	Application area of lubricant
*c	Use a wrench here	-	-

WARNING:

Apply lubricant to the thread and the tip of the tie-rod ball joint puller bolt.

CAUTION:

- Always tie a string to the steering knuckle without slack to prevent the tie-rod ball joint puller from falling.
- Install the tie-rod ball joint puller so as to make A parallel to B with the nut located in the center. Otherwise the dust cover may be damaged.

- Always use a wrench at the point shown in the figure.
- Do not damage the ball joint boot of the tie-rod end SUB-ASSY LH.
- Do not damage the steering knuckle.
- Do not damage the disc brake dust cover FR.

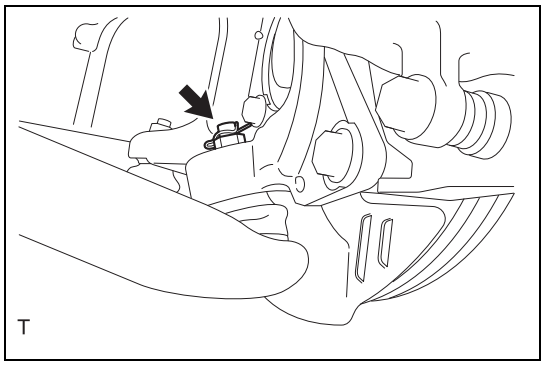

4. Disconnection of front suspension lower arm ASSY LH
   (1) Remove the cotter pin and nut.
   (2) Install the tie-rod ball joint puller to the thread of the front suspension lower arm ASSY LH.
   (3) Use a tie-rod ball joint puller to detach the front suspension lower arm ASSY LH.

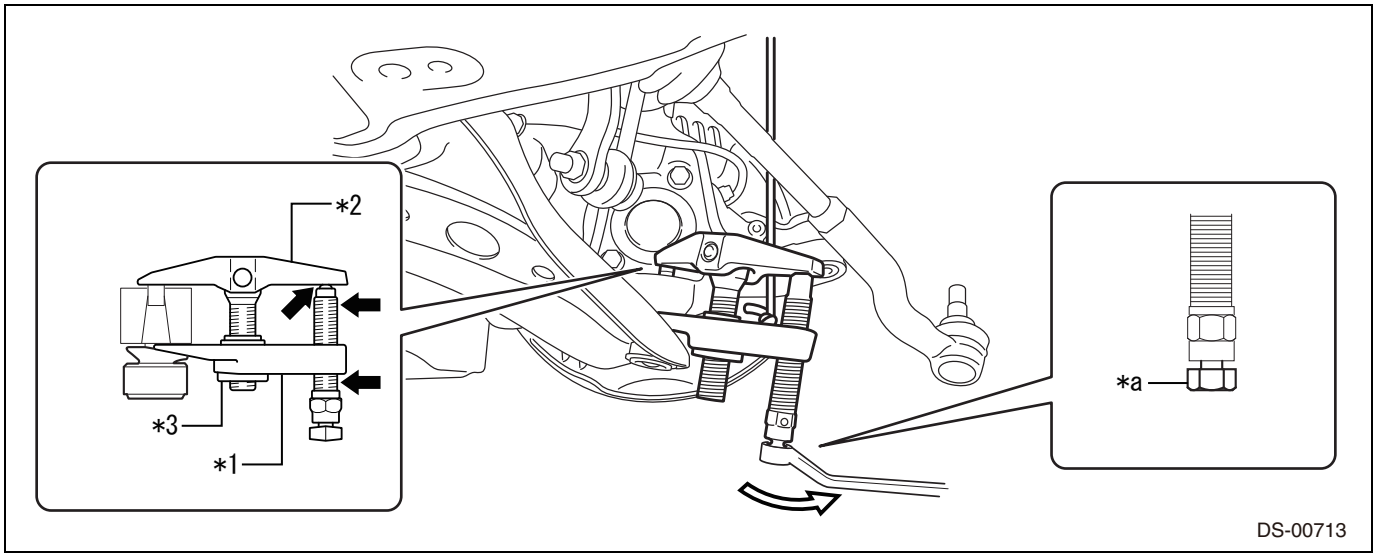

Captions in illustration

*1	Claw	*2	Body
*3	Nut	*a	Place the wrench here.
➡	Application area of lubricant	⇨	Drive

WARNING:
Apply lubricant to the thread and the tip of the tie-rod ball joint puller bolt.
CAUTION:

- Install the tie-rod ball joint puller so as to make the body parallel to the claw with the nut located in the center. Otherwise the dust cover of the front suspension lower arm ASSY may be damaged.
- Always tie a string to the vehicle without slack to prevent the tie-rod ball joint puller from falling.
- Do not damage the dust cover of the front suspension lower arm ASSY.
- Do not damage the front suspension lower arm ASSY.
- Do not damage the disc brake dust cover FR.
- Do not damage the steering knuckle.

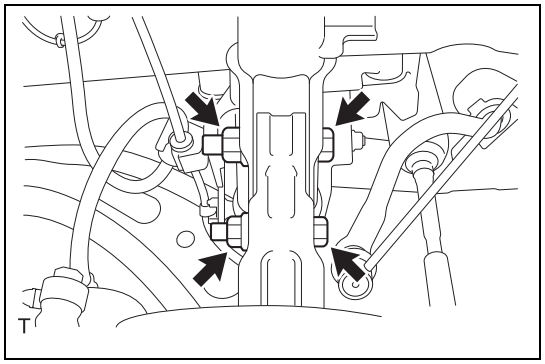

5. Removal of steering knuckle LH
   (1) Remove the 2 bolts and 2 nuts to remove the steering knuckle LH.
   CAUTION:
   Secure the bolt and turn the nut.

Installation

NOTE:

- The following procedure is for LH side.
- Perform the same procedures for the RH and LH side.

1. Installation of steering knuckle LH
   (1) Install the steering knuckle LH with 2 bolts and 2 new nuts.
   Standard value:T=155N·m {1581kgf·cm} {114.3ft·lbf}
2. Installation of front suspension lower arm ASSY LH
   (1) Install the front suspension lower arm ASSY LH with the nut.
   Standard value:T=51N·m {520kgf·cm} {37.6ft·lbf}
   (2) Install a new cotter pin.
3. Installation of tie-rod end SUB-ASSY LH
   (1) Install the tie-rod end SUB-ASSY LH to the steering knuckle LH with the nut.
   Standard value:T=27N·m {275kgf·cm} {19.9ft·lbf}
   (2) Install a new cotter pin.
   CAUTION:
   When aligning the clip holes after tightening the castle nut, tighten the castle nut further but within 60°.
4. Installation of disc brake dust cover FR LH
   (1) Install the front disc brake dust cover to the steering knuckle with 3 bolts.
   Standard value:T=18N·m {184kgf·cm} {13.3ft·lbf}
5. Installation of front axle hub & bearing ASSY LH (Refer to AD - 7)
6. Inspection and adjustment of front wheel alignment (Refer to AL - 2)
7. VDC sensor mid point setting (Refer to BC - 15)

Rear axle hub bolt

Exploded view

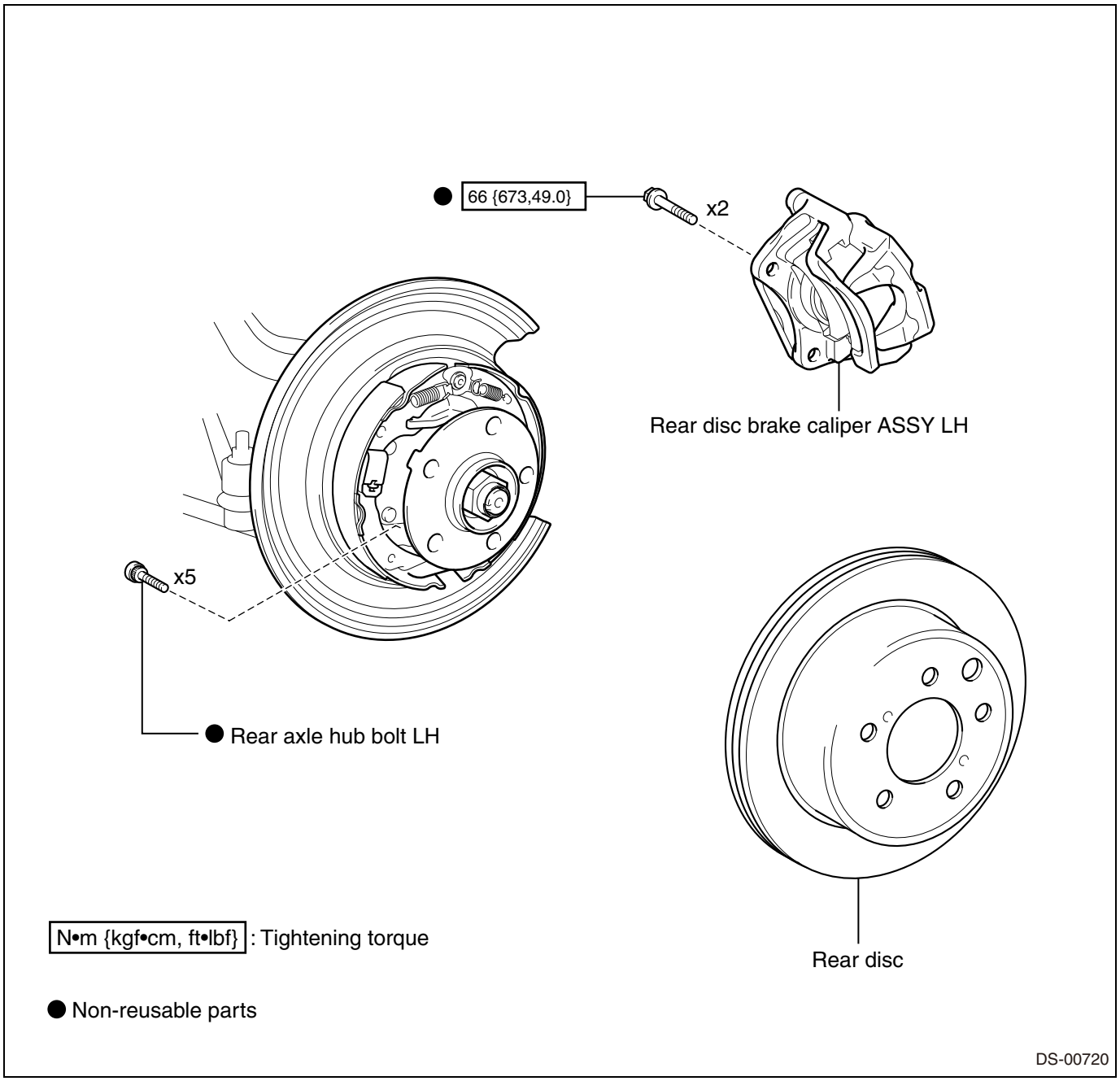

Replacement

NOTE:

- The following procedure is for LH side.
- Perform the same procedures for the RH and LH side.

1. Removal of rear tire
2. Disconnection of rear disc brake caliper ASSY LH (Refer to PB - 16)
3. Removal of rear disc (Refer to RB - 7)
4. Removal of rear axle hub bolt & bearing ASSY LH
   Using the SST and a hydraulic press, push out the hub bolt from the rear axle hub & bearing ASSY.
   CAUTION:
   - Do not hammer the hub bolts. This may deform the rear axle hub & bearing ASSY.
   - Do not reuse the hub bolt.

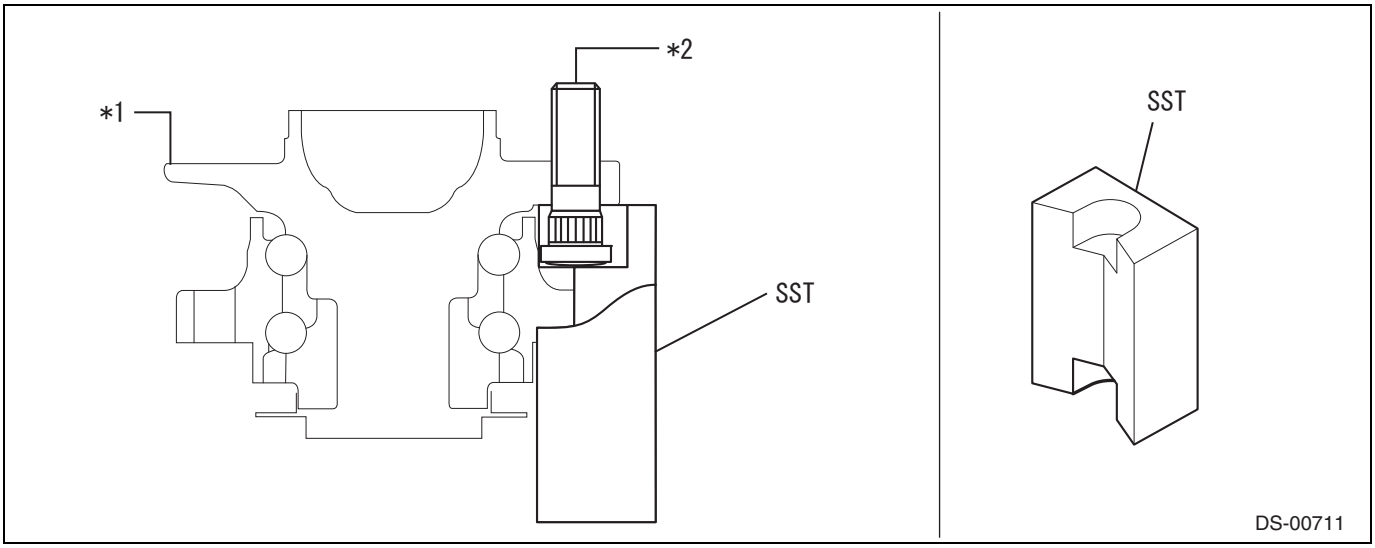

Captions in illustration

*1	Rear axle hub & bearing ASSY	*2	Hub bolt

SST 28399AG000

NOTE:

Because the rear axle hub & bearing ASSY can not be disassembled, only hub bolts can be removed.

5. Installation of rear axle hub bolt LH
   (1) Install the rear axle hub & bearing ASSY to the SST securely.
   (2) Using a press, press the new hub bolts until their seating surfaces come in contact snugly with the rear axle hub & bearing ASSY.

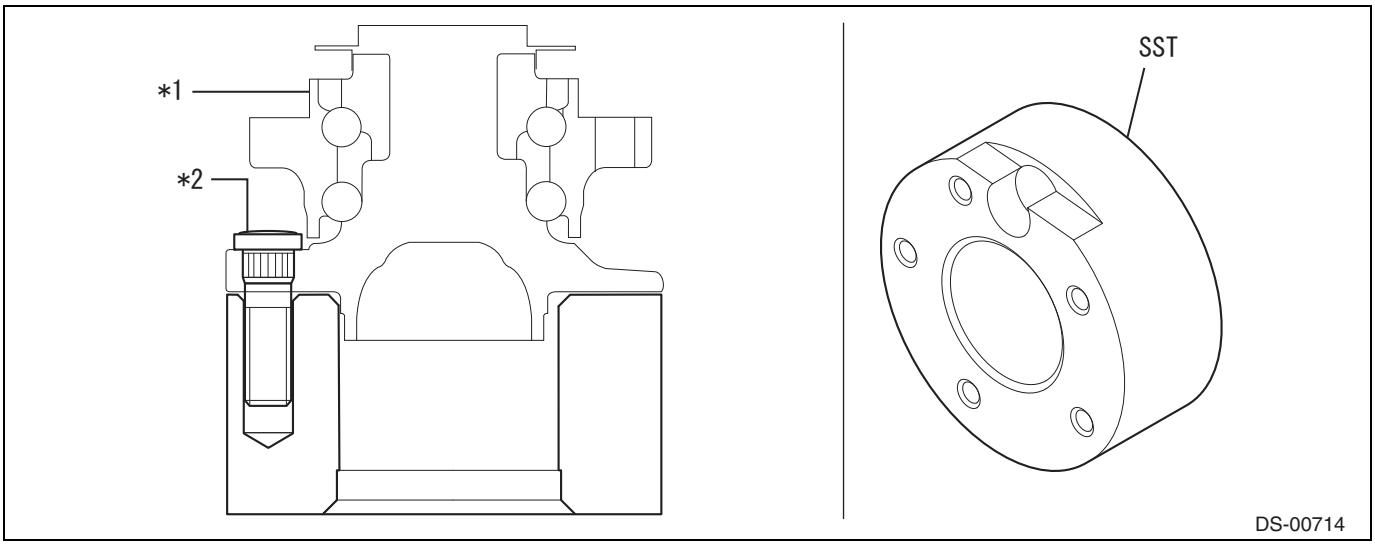

Captions in illustration

*1	Rear axle hub & bearing ASSY	*2	Hub bolt

SST 927080000

NOTE:

Use the 12 mm (0.47 in) dia. holes in the SST to prevent bolts from tilting.

6. Installation of rear disc (Refer to RB - 16)
7. Connection of rear disc brake caliper ASSY LH (Refer to PB - 25)
8. Installation of rear tire
   Standard value:T=120N·m {1224kgf·cm} {88.5ft·lbf}

AD

Rear axle hub

Exploded view

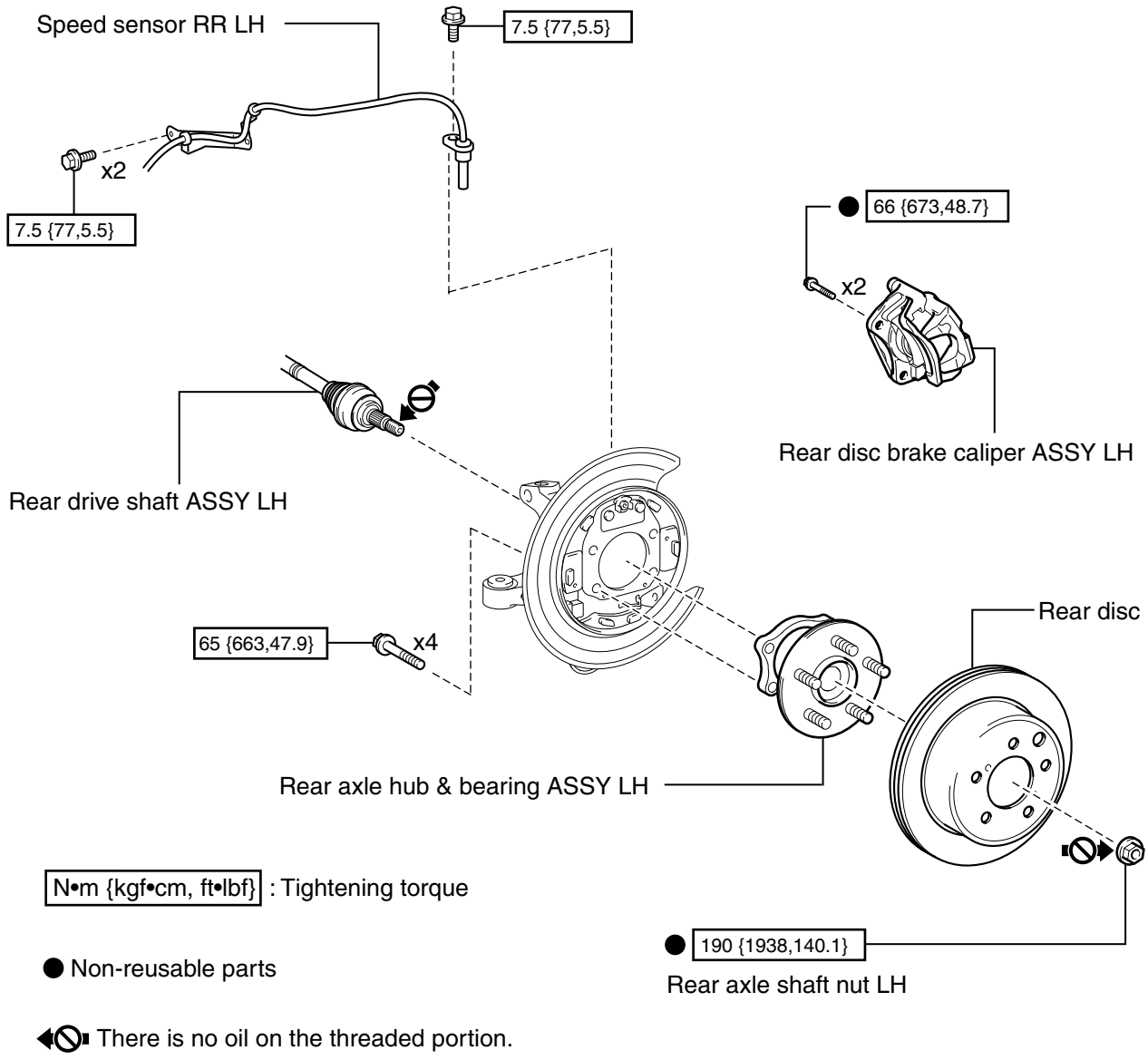

Removal

NOTE:

- The following procedure is for LH side.
- Perform the same procedures for the RH and LH side.

1. Removal of rear tire

AD

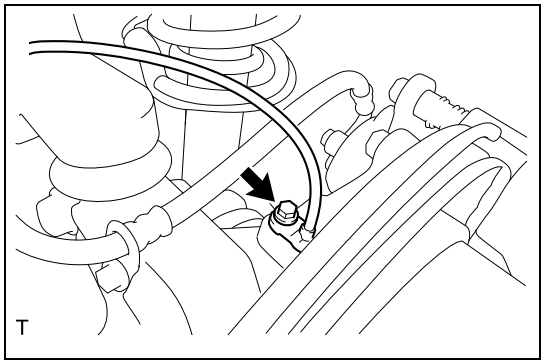

2. Disconnection of speed sensor RR LH
   (1) Remove the bolt, and then remove the speed sensor.
   CAUTION:
   Keep the tip and mounting portion of the speed sensor RR free from foreign matter.

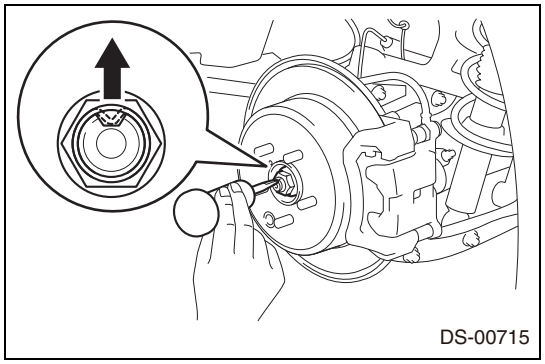

3. Removal of rear axle shaft nut LH
   (1) Remove the crimp of the rear axle shaft nut LH.
   CAUTION:
   Completely release the crimp of the nut to avoid damage to the thread of the rear drive shaft ASSY LH.
   (2) Remove the rear axle shaft nut using a socket wrench.
   CAUTION:
   Do not loosen the rear axle shaft nut LH with the rear axle loaded. Doing so may damage the rear axle hub and bearing ASSY LH.
4. Removal of rear drive shaft ASSY (Refer to DP - 5)
5. Disconnection of rear disc brake caliper ASSY LH (Refer to PB - 16)
6. Removal of rear disc (Refer to RB - 7)
7. Removal of rear axle hub and bearing ASSY LH

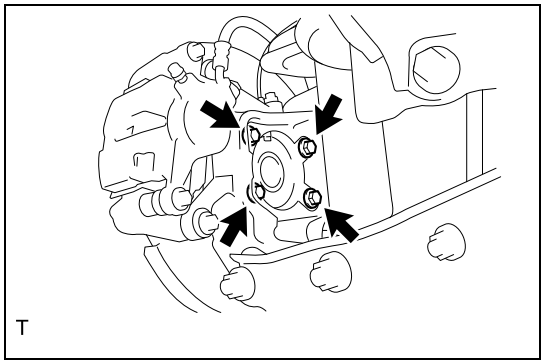

   (1) Remove 4 bolts, and remove the rear axle hub and bearing ASSY LH from the rear axle carrier.
   NOTE:
   Suspend the rear backing plate and the parking brake shoe with a string, etc.

AD

Installation

NOTE:
- The following procedure is for LH side.
- Perform the same procedures for the RH and LH side.

1. Installation of rear axle hub and bearing ASSY LH
   (1) Install the rear axle hub and bearing ASSY LH to the rear axle carrier with 4 bolts.
   Standard value:T=65N·m {663kgf·cm} {47.9ft·lbf}
2. Installation of rear disc (Refer to RB - 16)
3. Installation of rear drive shaft ASSY (Refer to DP - 11)
4. Connection of rear disc brake caliper ASSY LH (Refer to PB - 25)
5. Installation of rear axle shaft nut LH
   CAUTION:
   - Always clean the drive shaft even if it is new.
   - Clean and remove oil, foreign matter, etc. completely.

   (1) Install a new rear axle shaft nut LH using a socket wrench.
   Standard value:T=190N·m {1938kgf·cm} {140.1ft·lbf}

CAUTION:
Do not crimp the rear axle shaft nut LH.
NOTE:
After the inspection of the rear axle hub and bearing ASSY LH play and runout, crimp the rear axle shaft nut LH.

6. Inspection of rear axle hub & bearing ASSY axial play (Refer to AD - 17)
7. Inspection of rear axle hub & bearing ASSY runout (Refer to AD - 18)

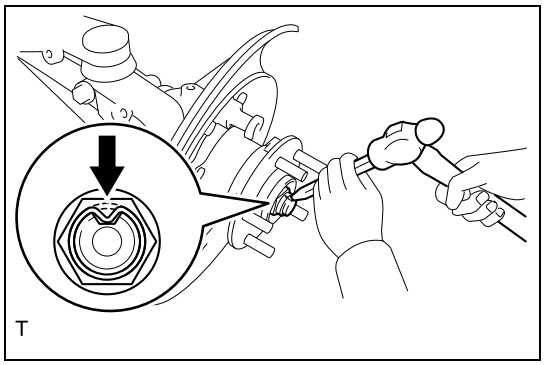

8. Securing of rear axle shaft nut LH
   (1) Crimp the rear axle shaft nut LH using a chisel and a hammer.
9. Installation of speed sensor RR LH
   (1) Install the speed sensor RR LH with a bolt.
   Standard value:T=7.5N·m {77kgf·cm} {5.5ft·lbf}
   CAUTION:
   Keep the tip and mounting portion of the speed sensor RR LH free from foreign matter.
10. Installation of rear tire
    Standard value:T=120N·m {1224kgf·cm} {88.5ft·lbf}
11. Adjustment of parking brake lever free play (Refer to PB - 2)
12. Inspection of test mode (speed sensor check) (Refer to BC - 15)

On-vehicle inspection

NOTE:
- The following procedure is for LH side.
- Perform the same procedures for the RH and LH side.

1. Removal of rear tire
2. Disconnection of rear disc brake caliper ASSY LH (Refer to PB - 16)
3. Removal of rear disc (Refer to RB - 7)

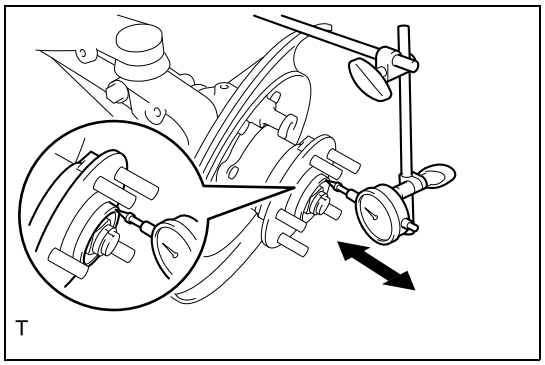

4. Inspection of rear axle hub & bearing ASSY axial play
   (1) Inspect axial play of the bearing near the axle hub inner periphery (flange portion) using a dial gauge.
   Limit: 0.05mm {0.00196in}
   CAUTION:
   If it exceeds the limit, replace the rear axle hub & bearing ASSY with a new part.

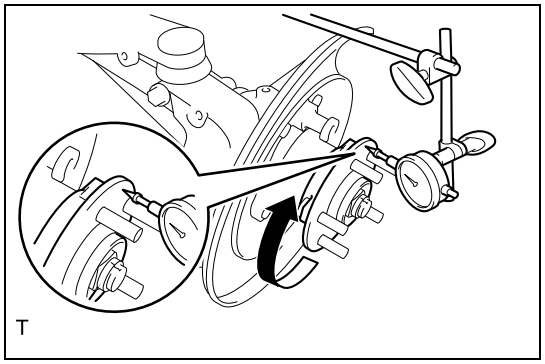

5. Inspection of rear axle hub & bearing ASSY runout
   (1) Inspect runout of the bearing near the axle hub outer periphery using a dial gauge.
   Limit: 0.05mm {0.00196in}
   CAUTION:
   If it exceeds the limit, replace the rear axle hub & bearing ASSY with a new part.
6. Installation of rear disc (Refer to RB - 16)
7. Connection of rear disc brake caliper ASSY LH (Refer to PB - 25)
8. Installation of rear tire
   Standard value:T=120N·m {1224kgf·cm} {88.5ft·lbf}

Rear axle carrier

Exploded view

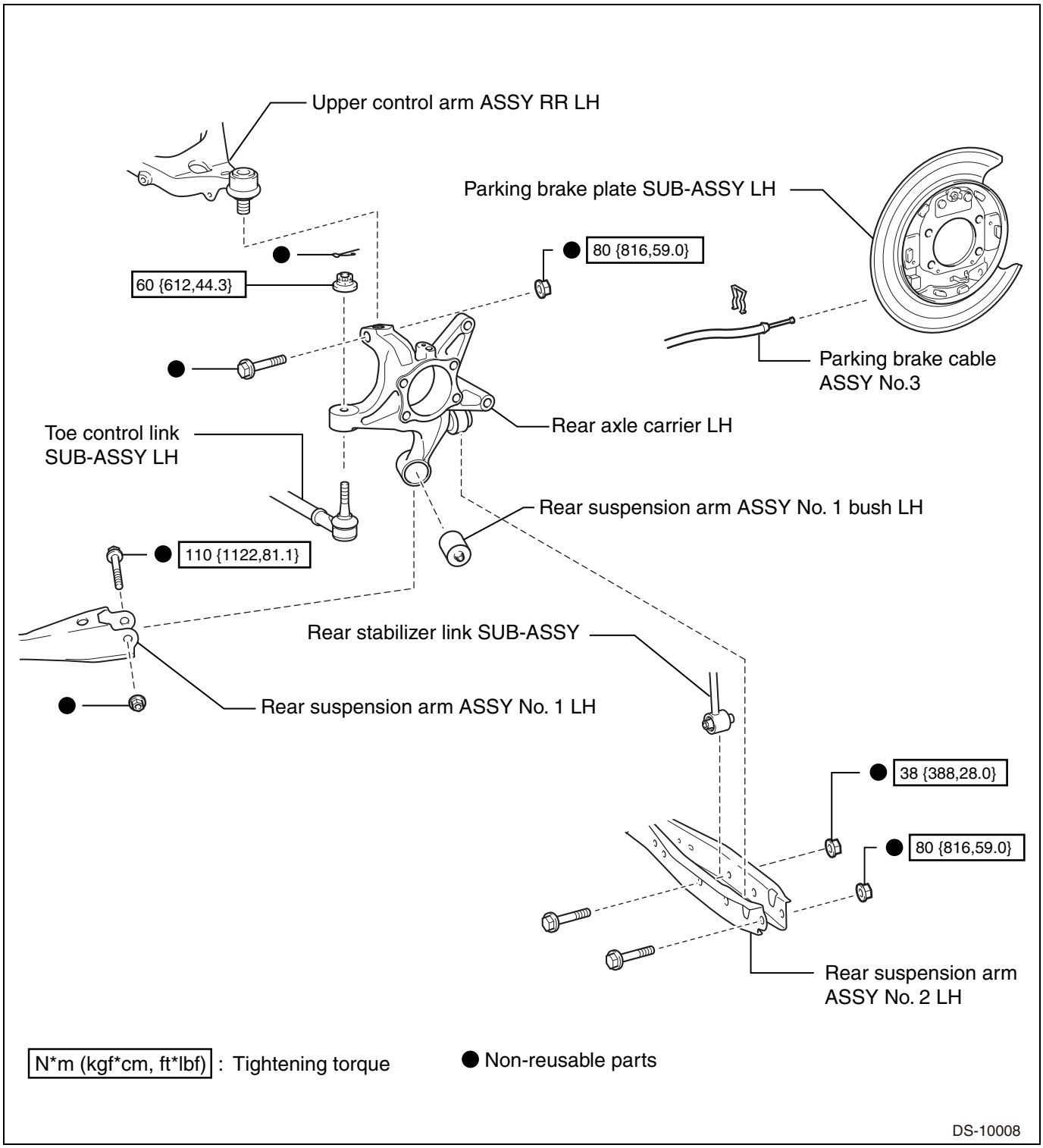

Removal

NOTE:

- The following procedure is for LH side.
- Perform the same procedures for the RH and LH side.

1. Removal of rear axle hub & bearing ASSY LH (Refer to AD - 15)
2. Disassembly of parking brake (Refer to PB - 16)
3. Disconnection of rear stabilizer link SUB-ASSY (installed on LH side) (Refer to RP - 6)

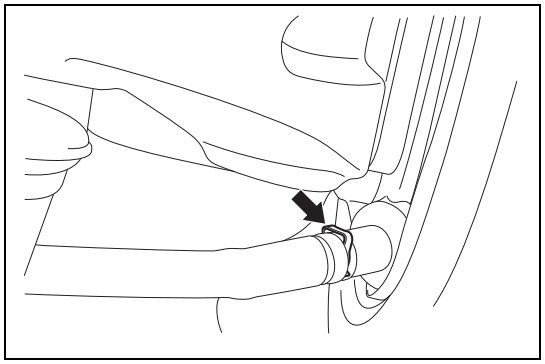

4. Disconnection of parking brake cable ASSY NO. 3
   (1) Remove the clip, and detach the parking brake cable ASSY NO. 3 from the back plate.

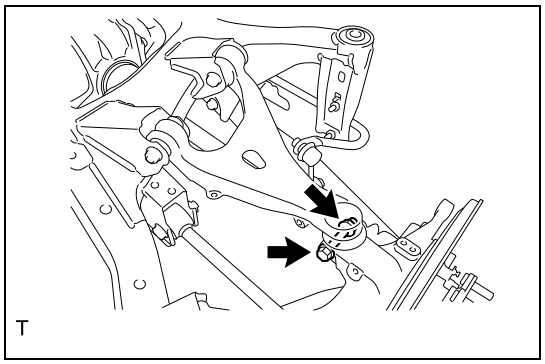

5. Disconnection of upper control arm ASSY RR LH
   (1) Remove the bolts and nuts, and detach the upper control arm ASSY RR LH from the rear axle carrier.

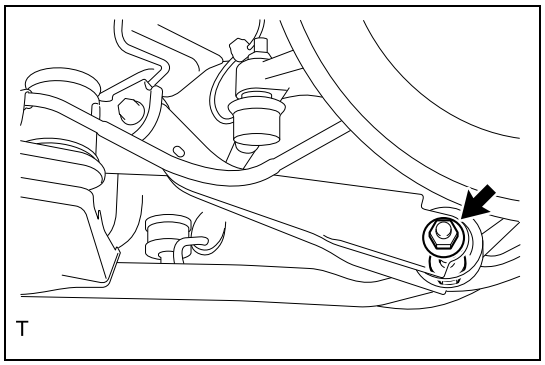

6. Disconnection of rear suspension arm ASSY NO. 1 LH
   (1) Remove the bolts and nuts, and detach the rear suspension arm ASSY NO. 1 LH from the rear axle carrier.

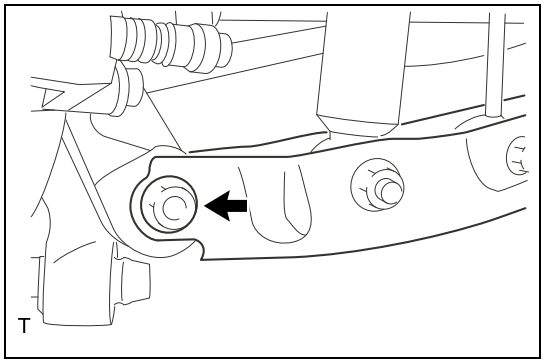

7. Disconnection of rear suspension arm ASSY NO. 2 LH
   (1) Remove the bolts and nuts, and detach the rear suspension arm ASSY NO. 2 LH from the rear axle carrier.

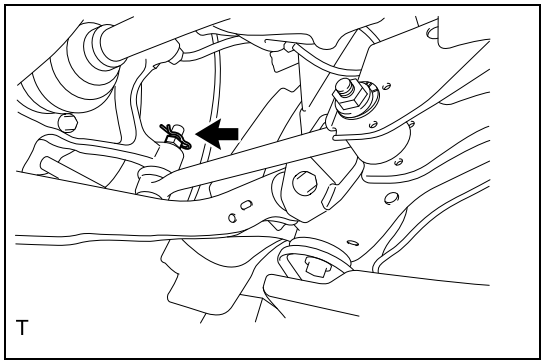

8. Disconnection of toe control link SUB-ASSY LH
   (1) Remove the cotter pin.
   (2) Remove the nut.
   (3) Using a tie-rod ball joint puller, detach the toe control link SUB-ASSY LH from the rear axle carrier.

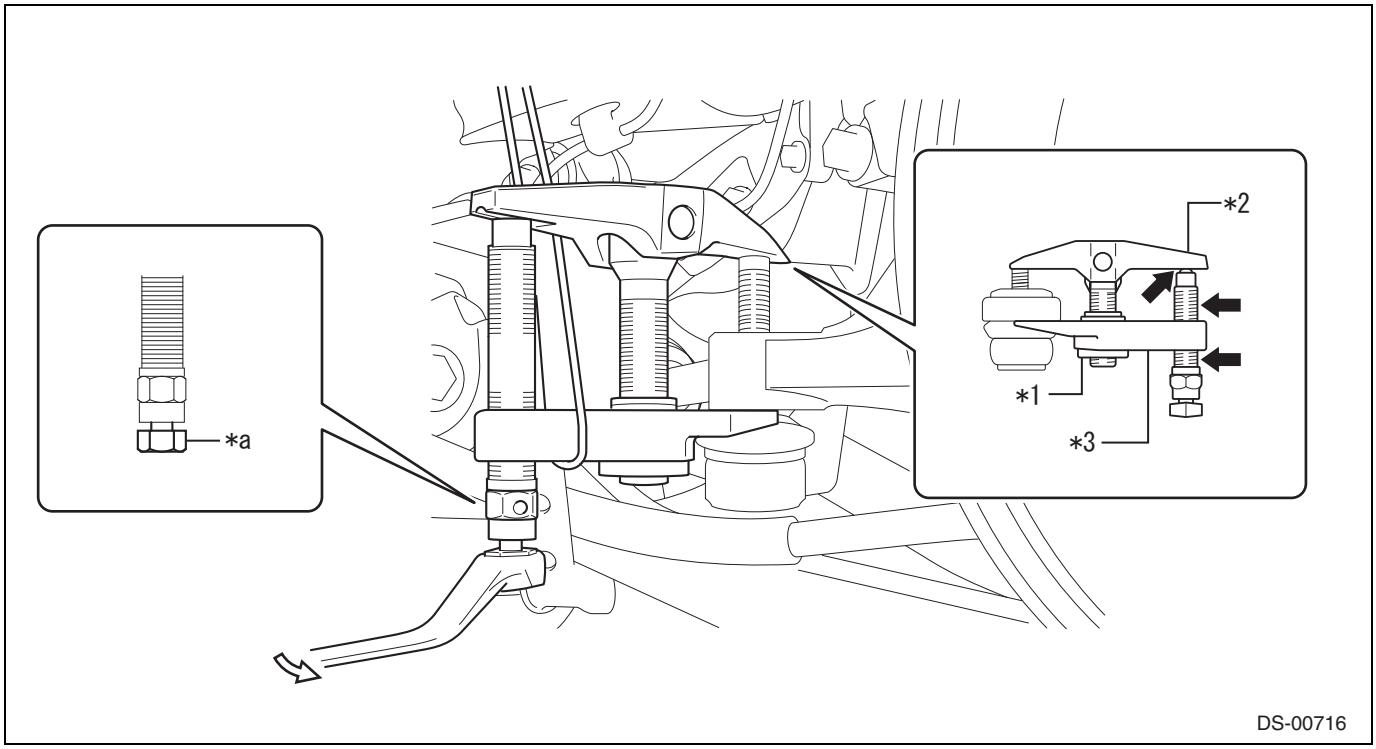

Captions in illustration

*1	Nut	*2	Body
*3	Claw	*a	Place the wrench here.
➡	Application area of lubricant	⇨	Direction of rotation

WARNING:
Apply lubricant to the thread and the tip of the tie-rod ball joint puller bolt.
CAUTION:
- Install the tie-rod ball joint puller so as to make the body parallel to the claw with the nut located in the center. Otherwise the dust cover of the toe control link SUB-ASSY may be damaged.
- Always tie a string to the vehicle without slack to prevent the tie-rod ball joint puller from falling.
- Do not damage the dust cover portion of the toe control link SUB-ASSY.
- Do not damage the toe control link SUB-ASSY.
- Do not damage the parking brake plate SUB-ASSY.
- Do not damage the rear axle carrier.

9. Removal of parking brake plate SUB-ASSY LH
10. Removal of rear axle carrier LH
    (1) Remove the rear axle carrier LH while supporting the drive shaft.
    CAUTION:
    - Do not damage the drive shaft outboard joint boot.
    - Do not push out the rear axle ASSY more than necessary to the vehicle outside.

    NOTE:
    Suspend the drive shaft ASSY using a rope or wire, etc.

Disassembly

NOTE:
- The following procedure is for LH side.
- Perform the same procedures for the RH and LH side.

1. Extraction of rear suspension arm ASSY NO. 1 bushing LH
   (1) Pull out the rear suspension arm ASSY NO. 1 bushing LH using the SST and a press.

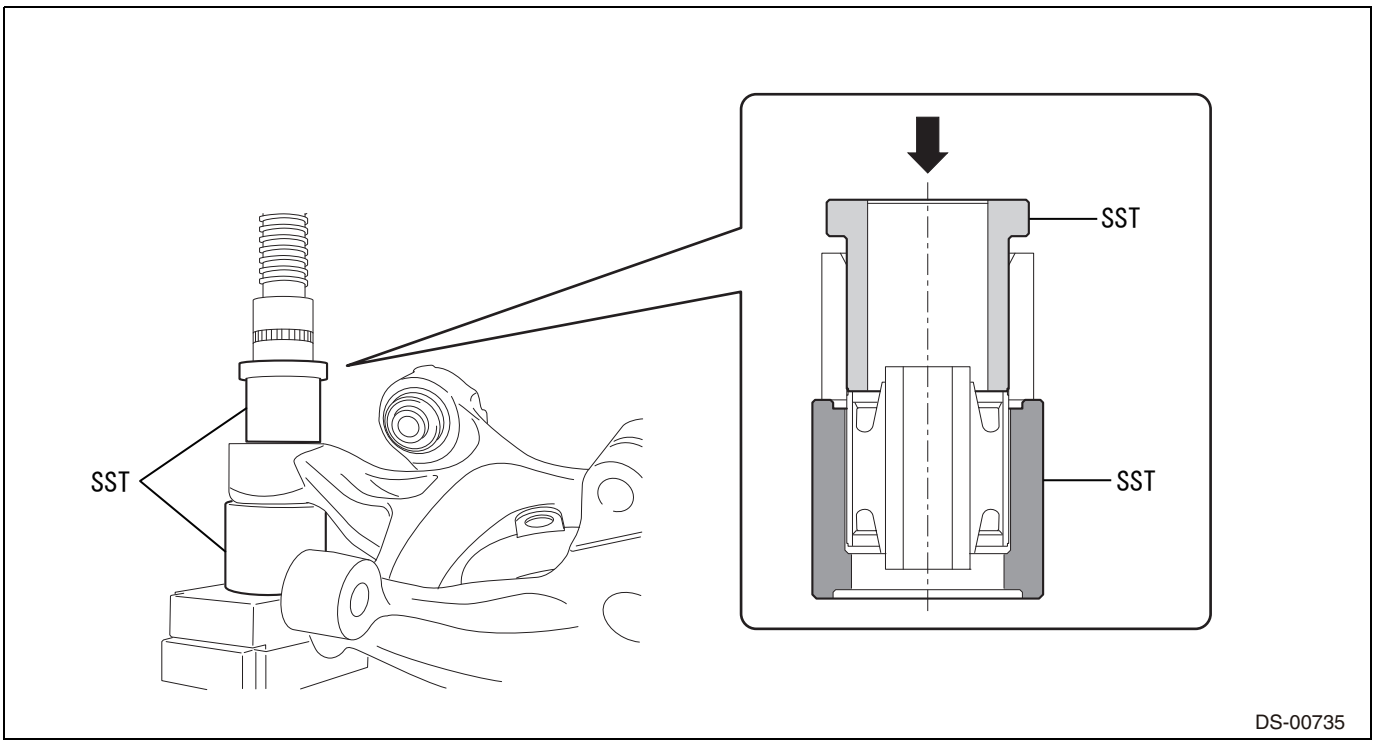

SST 20099FG000, 20099PA010

Captions in illustration

➡	Press weighting direction	-	-

Assembly

NOTE:

- The following procedure is for LH side.
- Perform the same procedures for the RH and LH side.

1. Installation of rear suspension arm ASSY NO. 1 bushing LH
   (1) Install the rear suspension arm ASSY NO. 1 bushing LH using the SST and a press.

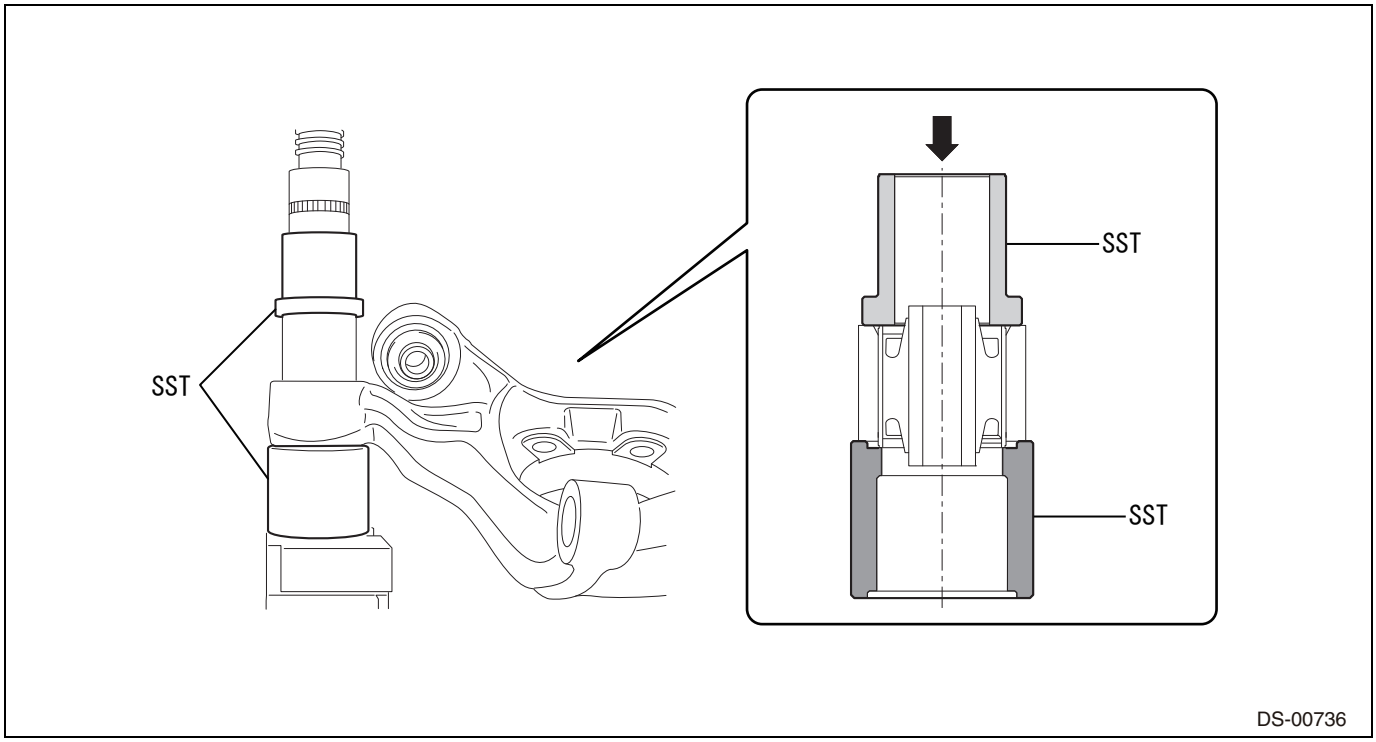

SST 20099FG000, 20099PA010

Captions in illustration

➡	Press weighting direction	-	-

Installation

NOTE:

- The following procedure is for LH side.
- Perform the same procedures for the RH and LH side.

1. Installation of rear axle carrier LH
   (1) Using a jack, lift the rear axle carrier and align the installation position of each arm.
   CAUTION:
   Use a jack with wooden blocks so that the rear axle carrier will not be damaged.
2. Temporary tightening of upper control arm ASSY RR LH
   (1) Install the upper control arm ASSY RR LH to the rear axle carrier, and temporarily tighten it with new bolts and nuts.
3. Temporary tightening of rear suspension arm ASSY NO. 1 LH
   (1) Install the rear suspension arm ASSY NO. 1 LH to the rear axle carrier, and temporarily tighten it with new bolts and nuts.
4. Temporary tightening of rear suspension arm ASSY NO. 2 LH
   (1) Install the rear suspension arm ASSY NO. 2 LH to the rear axle carrier, and temporarily tighten it with new bolts and nuts.
5. Installation of toe control link SUB-ASSY LH
   (1) Install the toe control link to the rear axle carrier with the nut.
   Standard value:T=60N·m {612kgf·cm} {44.2ft·lbf}
   (2) Install the cotter pin.
6. Temporary tightening of rear stabilizer link SUB-ASSY (installation position LH side) (Refer to RP - 11)
7. Installation of parking brake cable ASSY NO.3
   (1) Install the parking brake cable ASSY NO. 3 to the rear axle carrier with the clip.
8. Assembly of parking brake (Refer to PB - 20)
9. Stabilization of vehicle (Refer to RP - 11)
10. Final tightening of upper control arm ASSY RR LH
    (1) Tighten the mounting bolts and nuts of the upper control arm ASSY RR LH.
    Standard value:T=80N·m {816kgf·cm} {59.0ft·lbf}

AD

11. Final tightening of rear suspension arm ASSY NO. 1 LH
    (1) Tighten the mounting bolts and nuts of the rear suspension arm ASSY NO. 1 LH.
    CAUTION:
    Secure the nut and turn the bolt.
    Standard value:T=110N·m {1122kgf·cm} {81.1ft·lbf}
12. Final tightening of rear suspension arm ASSY NO. 2 LH
    (1) Tighten the mounting bolts and nuts of the rear suspension arm ASSY NO. 2 LH.
    Standard value:T=80N·m {59kgf·cm} {59.0ft·lbf}
13. Tightening of rear stabilizer link SUB-ASSY (installation position LH side) (Refer to RP - 11)
14. Installation of rear axle hub & bearing ASSY LH (Refer to AD - 16)
15. Inspection and adjustment of rear wheel alignment (Refer to AL - 7)
16. Inspection and adjustment of headlight (Refer to LE - 51)
17. VDC sensor mid point setting (Refer to BC - 15)

Differential system

Precautions

1. Wash the outside of the rear differential ASSY to remove sand, mud, etc. before disassembly so that they will not enter the inside of the rear differential during disassembly and installation.
2. When disassembling the joint sections of light alloy parts such as the differential carrier cover, disassemble them by slightly tapping with a plastic hammer. Do not pry apart with a screwdriver or other tools.
3. Keep the disassembled parts in order, and protect them from dust and dirt covering with a cloth.
4. Before installation, all disassembled parts should be thoroughly washed and dried, and then apply grease or oil to the necessary sections. When washing aluminum and rubber parts, bolts with lubricant, etc., do not use alkaline chemical solvent. In addition, do not wash rubber base parts such as O-rings and oil seals with wash oil (appropriate detergent, etc.).
5. Before installation, apply sufficient amount of differential oil used for each differential ASSY to the sliding surfaces and rotating sections.
6. When fixing the parts in a vise, do not place the parts directly in a vise but use an aluminum plates in between.
7. Be careful of handling the mating surfaces of the case. If they are damaged, oil leakage may occur.
8. Before applying seal material, completely remove the old seal material adhering to the sealing portions, and then wash the sealing portion with wash oil (appropriate detergent, etc.).
9. After assembling the parts with seal material, leave them for 1 hour or more, and then fill them with oil. Avoid rapid acceleration and deceleration for 12 hours or more.
10. Be careful of handling the contact surfaces to the oil seals, O-rings and gaskets. If they are damaged, oil leakage may occur.
11. When press-fitting the oil seal farther than the end face of the differential carrier, oil leakage may occur. To avoid oil leakage, measure the press-fitting amount at more than 3 points on the oil seal circumference. Then, make sure that the difference between the maximum and the minimum of the measured values is within the specification.
12. Be careful not to damage the oil seal lip and outer circumference while press-fitting the oil seal.
13. When replacing the bearing, replace the outer race and the inner race as a set.
14. When replacing the bearing, do not apply excessive force to the roller, the holder and the rolling contact surface.
15. Anti-rust oil is applied to a new bearing. Do not wash off this oil.
16. If the seat or the thread of the bolt is heavily rusted, replace it with a new part.

Symptom table

NOTE:

Use the following table to identify the trouble cause. The check points are listed in the order of priority from the viewpoint of possible trouble causes. Check each part in the sequence. If necessary, replace the parts.

Rear differential

Symptoms	Inspection items	Reference pages
Noise from differential carrier	Oil level (too low)	AD - 26
	Ring gear or pinion (worn or chipped)	AD - 36
	Improper adjustment of backlash	AD - 36
	Improper adjustment of preload	AD - 36
	Improper adjustment of tooth contact	AD - 36
	Wear of bearing	AD - 36
Oil leakage from differential carrier	Oil level (too high)	AD - 26
	Side gear shaft oil seal (worn or damaged)	AD - 30
	Carrier oil seal (worn or damaged)	AD - 27

Differential oil

Adjustment

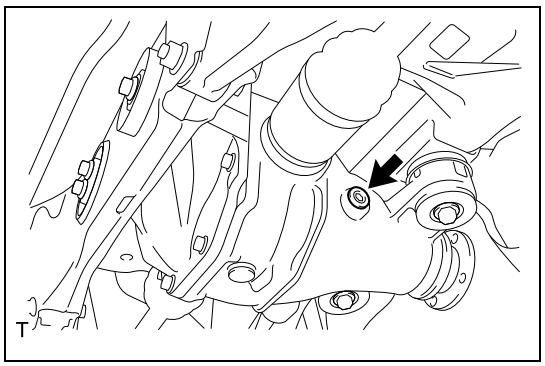

1. Inspection of differential oil
   (1) Remove the filler plug and the gasket.

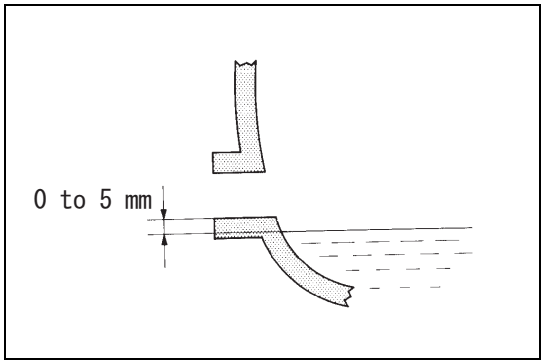

   (2) Make sure that the oil level is within 0 to 5 mm {0 to 0.2 in} from the bottom of filler plug hole.
   CAUTION:
   - Excess or shortage of oil may lead to trouble.
   - Park the vehicle on a level road.

   (3) If the oil level is low, perform the inspection of oil leakage.
   (4) Tighten the filler plug via a new gasket.
   Standard value:T=49N·m {500kgf·cm} {36.1ft·lbf}
   CAUTION:
   When oil is replaced, check the oil level again after driving.

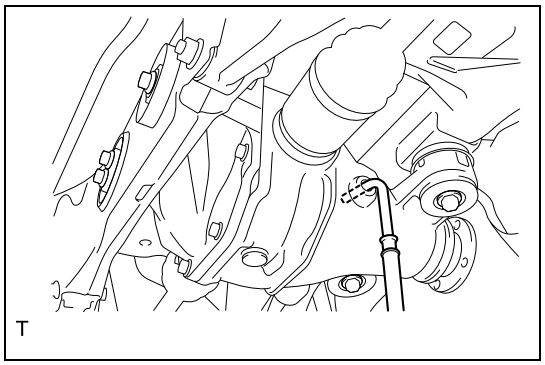

2. Refilling of differential oil
   CAUTION:
   Do not mix different types of oil.
   (1) Remove the filler plug and the gasket.
   (2) Refill with differential oil.
   Recommended product: Differential gear oil LX (API GL-5, SAE 75W-85)
   Substitute product: GL-5 75W-85 or GL-5 75W-90
   CAUTION:
   When using the substitute product, the function and performance may be inferior.
   NOTE:
   Oil level: 1.15±0.05 L {1.22±0.05 US qt, 1.01±0.04 Imp qt}
   (3) Check the oil level.
   (4) Tighten the filler plug via a new gasket.
   Standard value:T=49N·m {500kgf·cm} {36.1ft·lbf}
   CAUTION:
   When oil is replaced, check the oil level again after driving.

Rear differential carrier oil seal

Exploded view

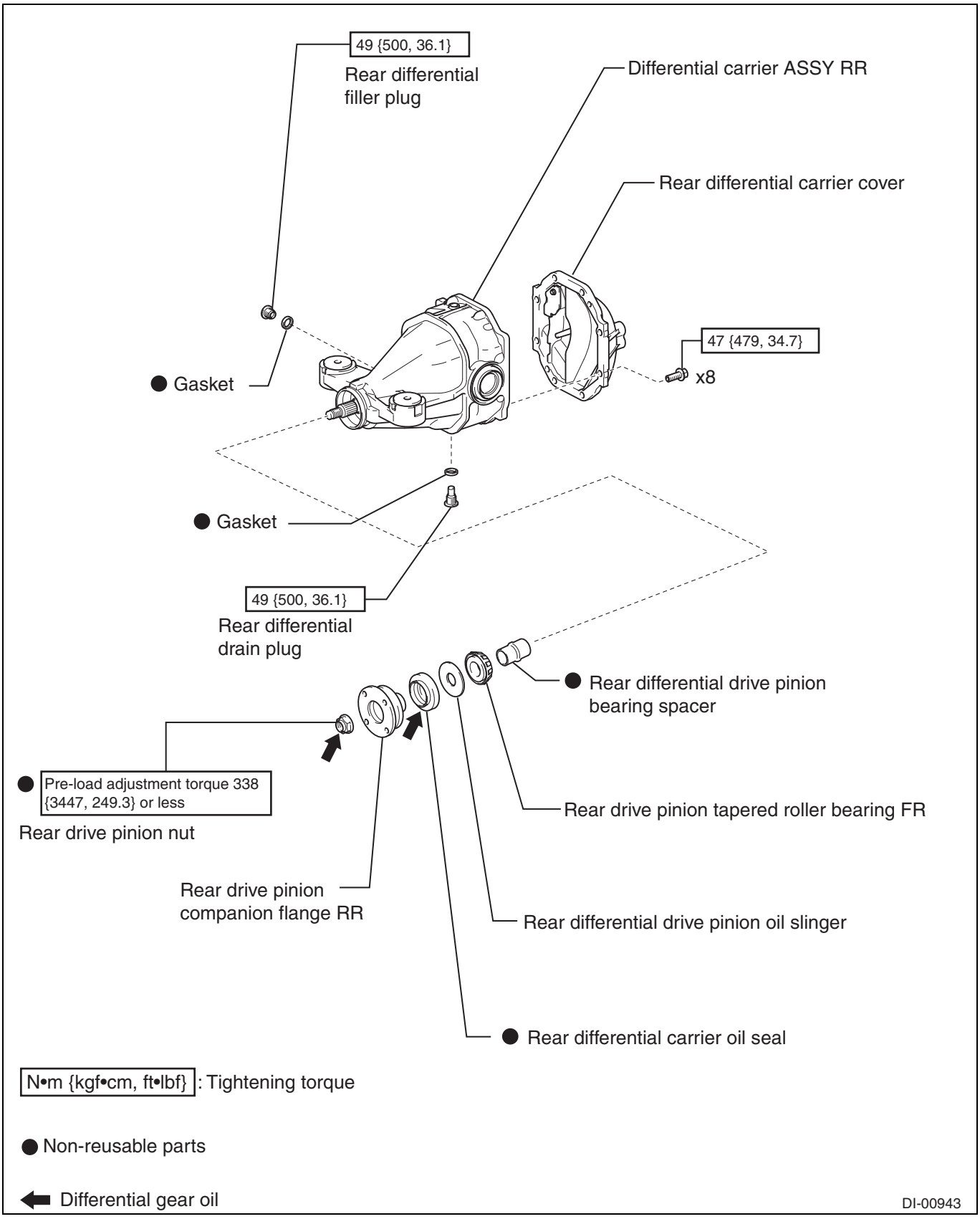

Replacement

1. Removal of differential carrier ASSY RR (Refer to AD - 35)

2. Fixation of differential carrier ASSY RR (Refer to AD - 36)
3. Removal of rear drive pinion nut (Refer to AD - 41)
4. Removal of rear drive pinion companion flange RR (Refer to AD - 41)

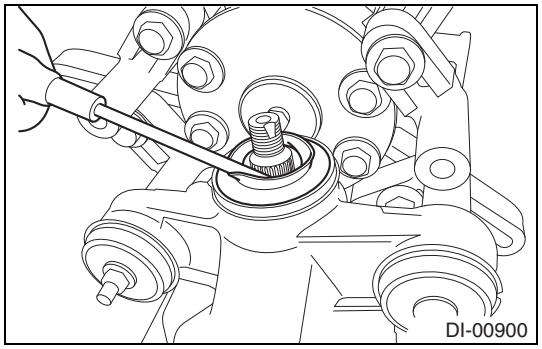

5. Removal of rear differential carrier oil seal
   (1) Remove the oil seal from the differential carrier using a flat tip screwdriver.
   NOTE:
   When replacing the oil seal, replace the rear differential drive pinion bearing spacer and readjust the drive pinion preload.

6. Removal of rear differential drive pinion oil slinger (Refer to AD - 42)
7. Removal of rear drive pinion tapered roller bearing FR (Refer to AD - 42)

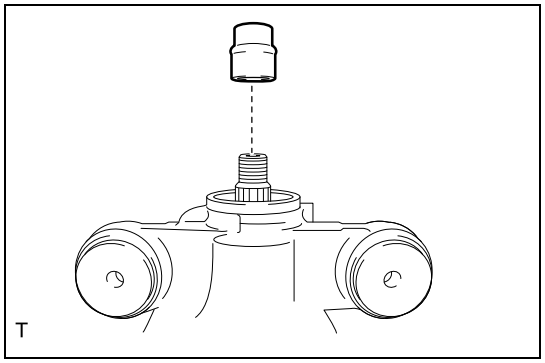

8. Replacement of rear differential drive pinion bearing spacer
   (1) Replace the bearing spacer with a new part.

9. Installation of rear drive pinion tapered roller bearing FR (Refer to AD - 60)
10. Installation of rear differential drive pinion oil slinger (Refer to AD - 60)
11. Installation of rear drive pinion companion flange RR (Refer to AD - 61)
12. Removal of rear drive pinion companion flange RR (Refer to AD - 41)

AD

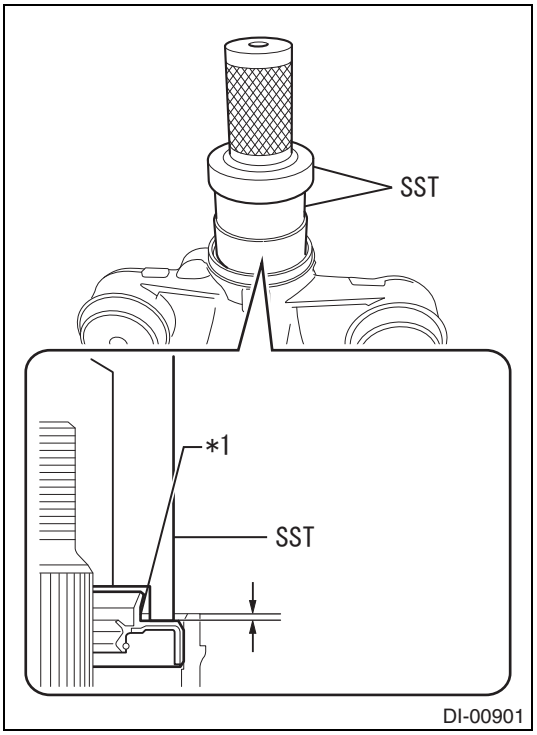

13. Installation of rear differential carrier oil seal
   (1) Press-fit a new oil seal into the bottom position of the differential carrier taper portion using the SST and a hammer.
   SST 498447120 , 499755502

Captions in illustration

*1	Rear differential carrier oil seal

   CAUTION:
   - Evenly tap and press-fit the oil seal in a straight forward direction.
   - Do not press-fit the oil seal excessively.

   (2) Measure the press-fitting amount of the oil seal using a caliper gauge.
   Standard value: 2±0.45 mm {0.08±0.018 in} (from the differential carrier end face)
   CAUTION:
   Perform the measurement at 3 points or more on the oil seal circumference, and the difference between the maximum and the minimum of the measured values must be 0.65 mm {0.026 in} or less.
   (3) Apply a thin coat of differential gear oil to the lip of the oil seal.

14. Installation of rear drive pinion companion flange RR (Refer to AD - 61)

15. Adjustment of differential drive pinion preload (Refer to AD - 62)
16. Inspection of overall preload (Refer to AD - 63)
17. Fixation of rear drive pinion nut (Refer to AD - 64)
18. Removal of differential carrier ASSY RR (Refer to AD - 65)
19. Installation of differential carrier ASSY RR (Refer to AD - 65)

Rear differential side gear shaft oil seal

Exploded view

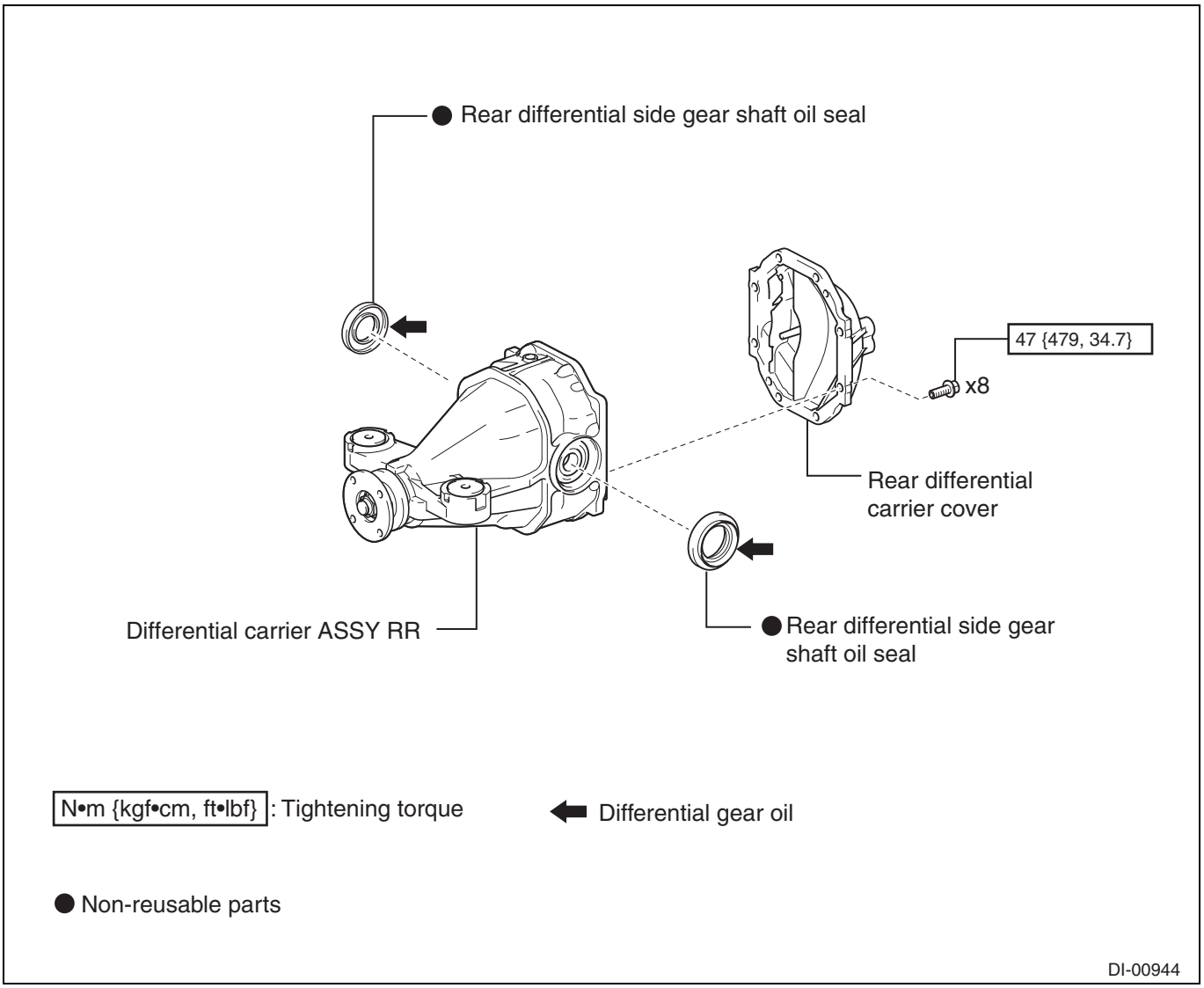

AD

Replacement

1. Removal of differential carrier ASSY RR (Refer to AD - 35)
2. Fixation of differential carrier ASSY RR (Refer to AD - 36)

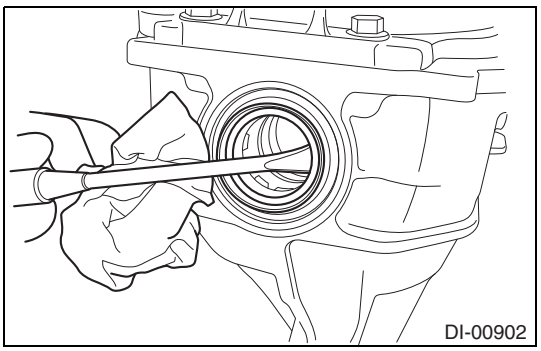

3. Removal of rear differential side gear shaft oil seal
   (1) Remove the right and left side oil seals using a flat tip screwdriver.

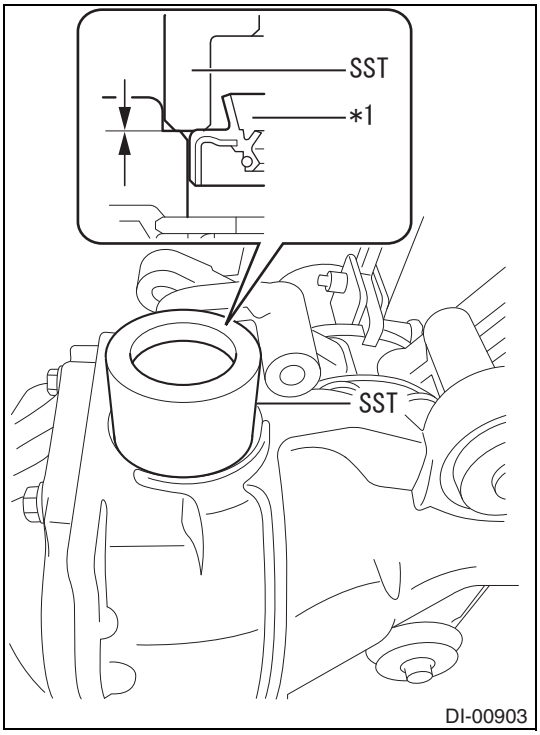

4. Installation of rear differential side gear shaft oil seal
   (1) Press-fit 2 new oil seals into the position shown in the figure using the SST and a hammer.
   SST 20299AG010

Captions in illustration

*1	Rear differential side gear shaft oil seal

   Standard value: 0±0.5 mm {0±0.02 in} (from the differential carrier end face)
   CAUTION:
   Evenly tap and press-fit the oil seal in a straight forward direction.
   (2) Apply a thin coat of differential gear oil to the lip of the oil seal.

5. Removal of differential carrier ASSY RR (Refer to AD - 65)
6. Installation of differential carrier ASSY RR (Refer to AD - 65)

Rear differential carrier ASSY

Exploded view

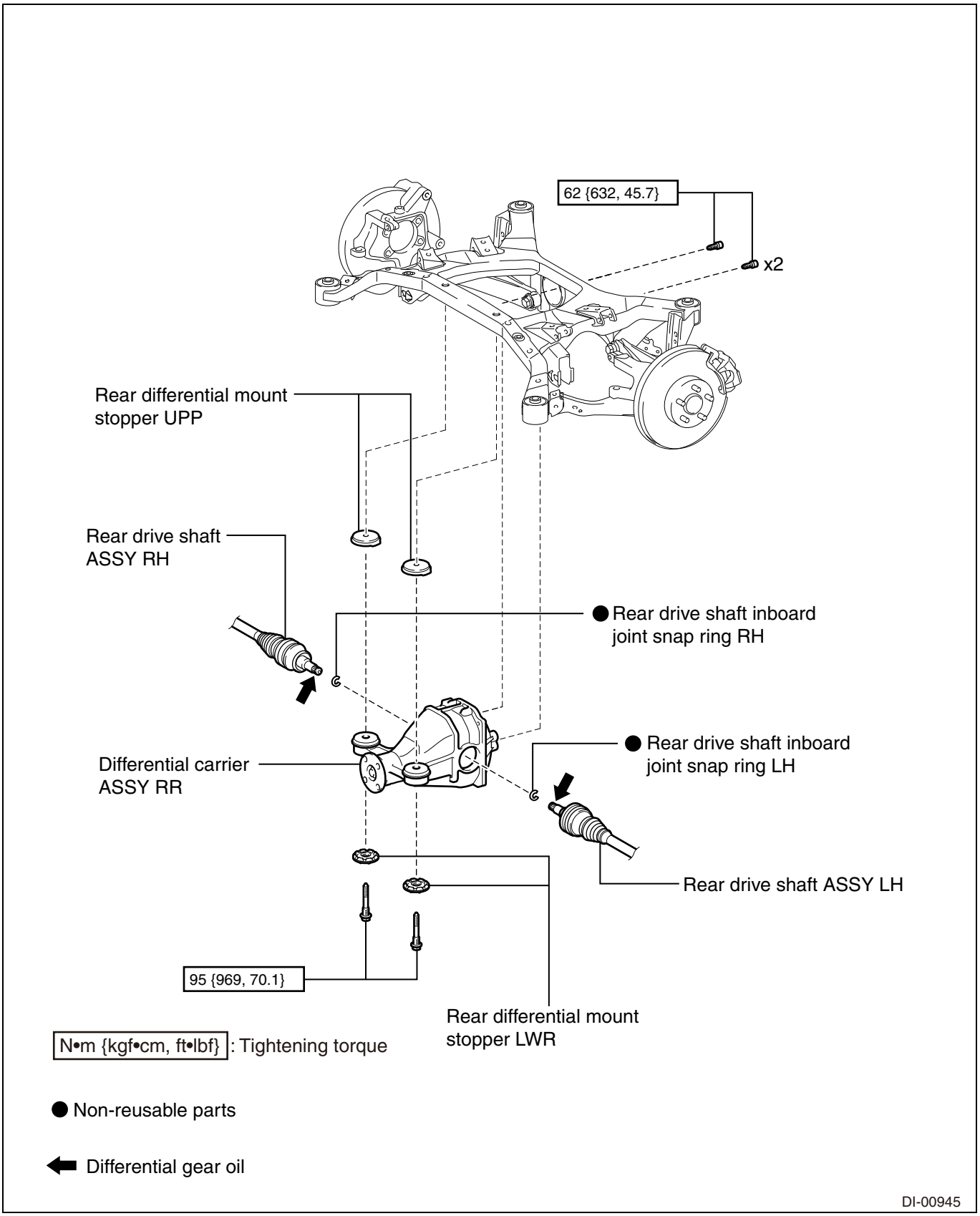

AD

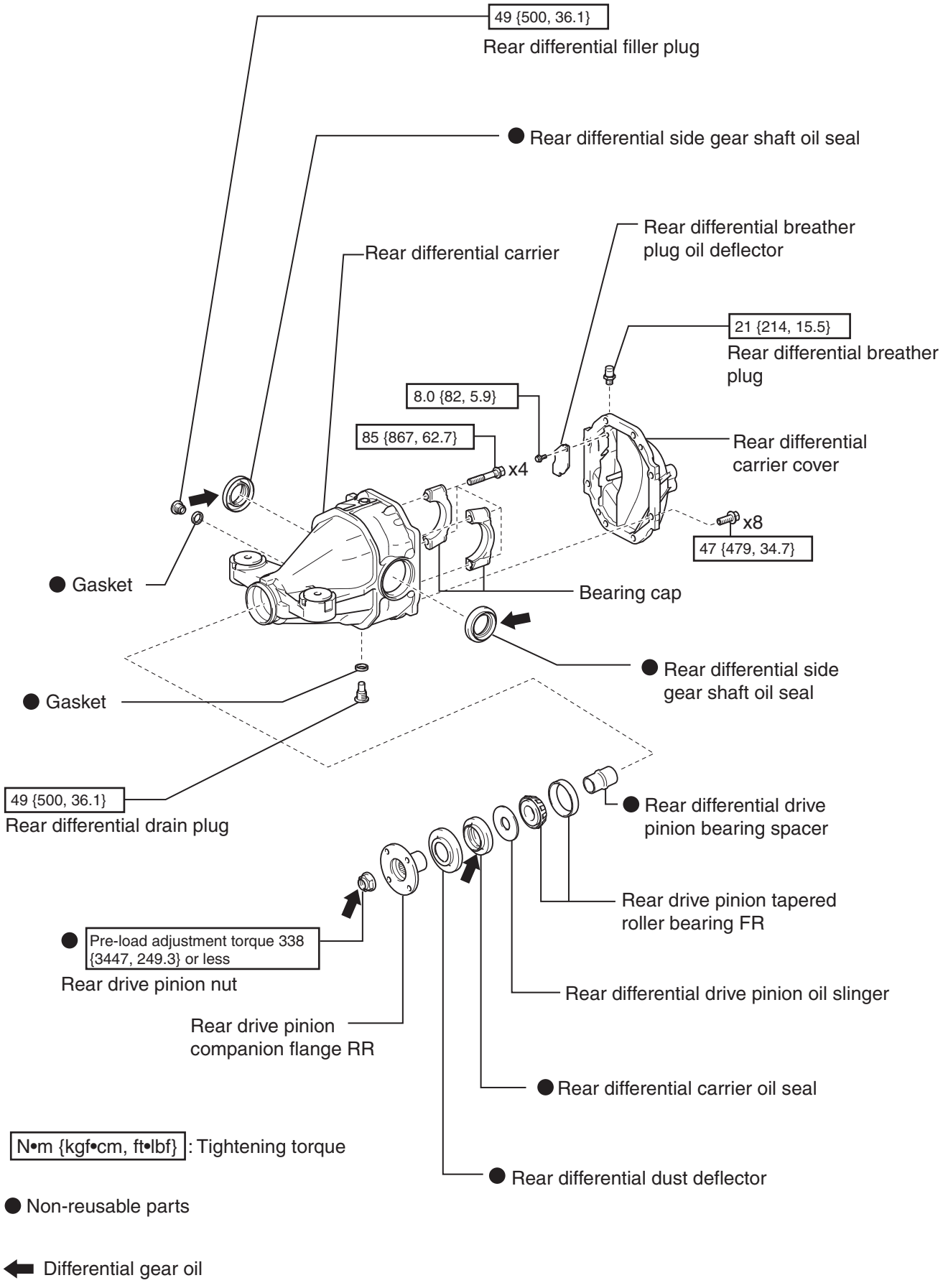
49 {500, 36.1}
Rear differential filler plug
● Rear differential side gear shaft oil seal
Rear differential carrier
Rear differential breather plug oil deflector
21 {214, 15.5}
Rear differential breather plug
8.0 {82, 5.9}
85 {867, 62.7}
x4
Rear differential carrier cover
x8
47 {479, 34.7}
● Gasket
Bearing cap
● Rear differential side gear shaft oil seal
● Gasket
49 {500, 36.1}
Rear differential drain plug
● Rear differential drive pinion bearing spacer
Rear drive pinion tapered roller bearing FR
● Pre-load adjustment torque 338 {3447, 249.3} or less
Rear drive pinion nut
Rear differential drive pinion oil slinger
Rear drive pinion companion flange RR
● Rear differential carrier oil seal
N•m {kgf•cm, ft•lbf} : Tightening torque
● Rear differential dust deflector
● Non-reusable parts
Differential gear oil
DI-00946

AD

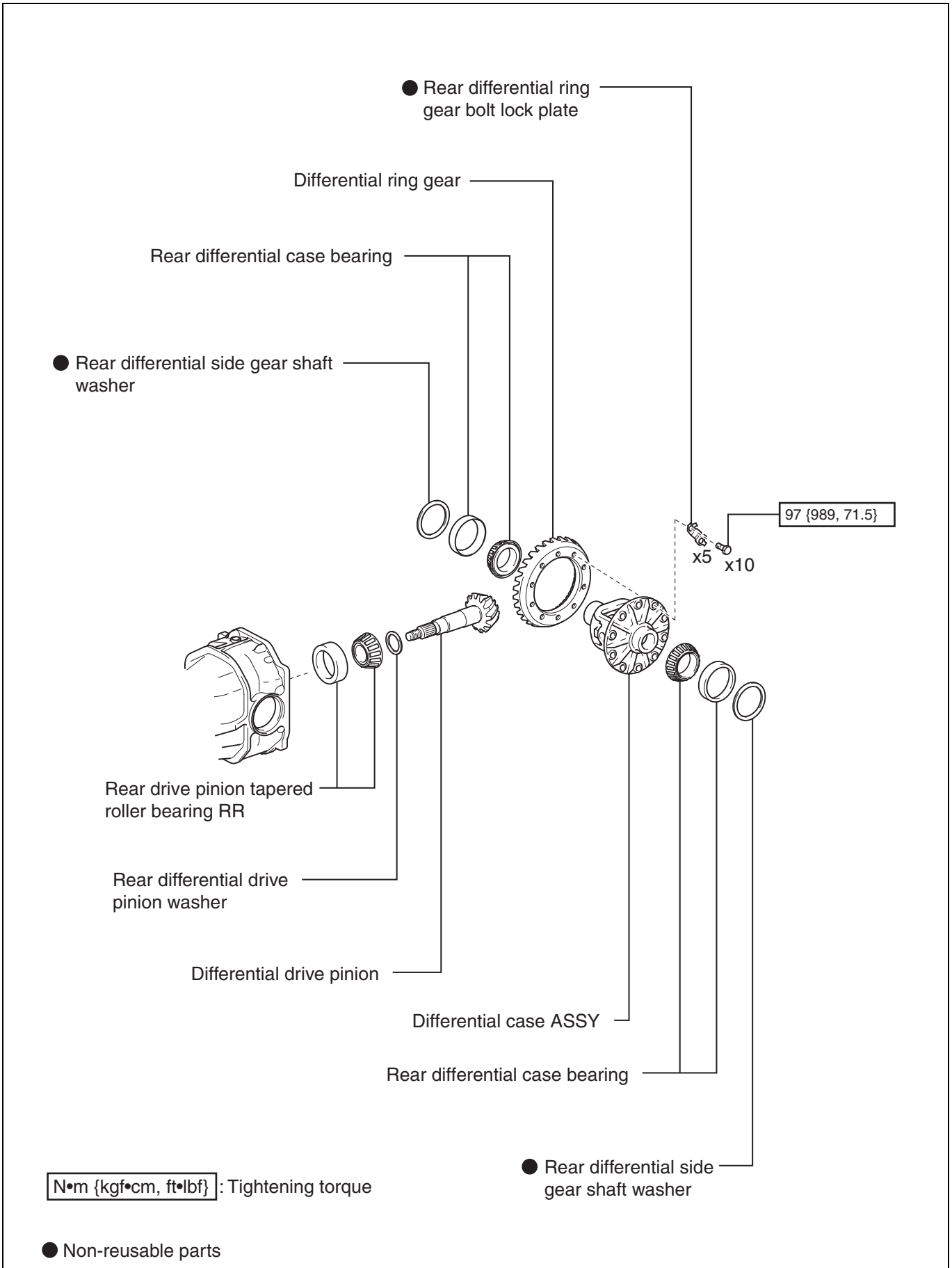
● Rear differential ring gear bolt lock plate
Differential ring gear
Rear differential case bearing
● Rear differential side gear shaft washer
97 {989, 71.5}
x5
x10
Rear drive pinion tapered roller bearing RR
Rear differential drive pinion washer
Differential drive pinion
Differential case ASSY
Rear differential case bearing
● Rear differential side gear shaft washer
N•m {kgf•cm, ft•lbf} : Tightening torque
● Non-reusable parts
DI-00947

AD

Removal

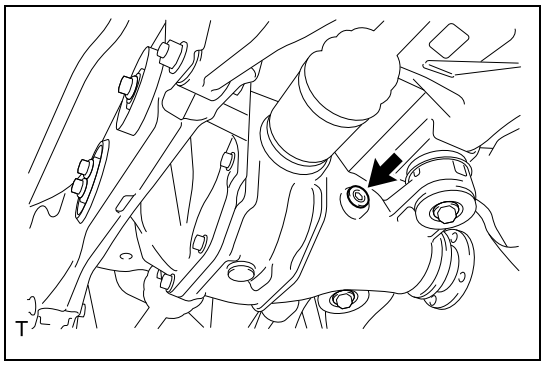

1. Draining of differential oil
   (1) Remove the filler plug and the gasket.

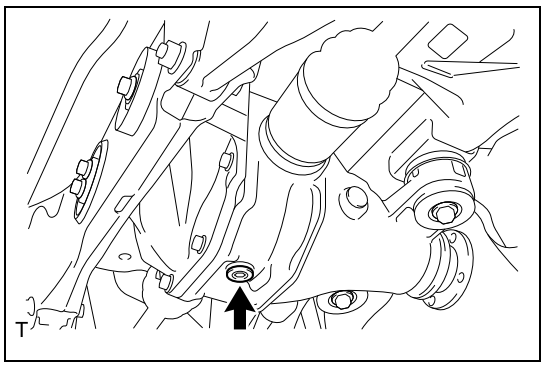

(2) Remove the drain plug and the gasket, and then drain oil.

2. Removal of propeller shaft with center bearing ASSY (Refer to DP - 14)

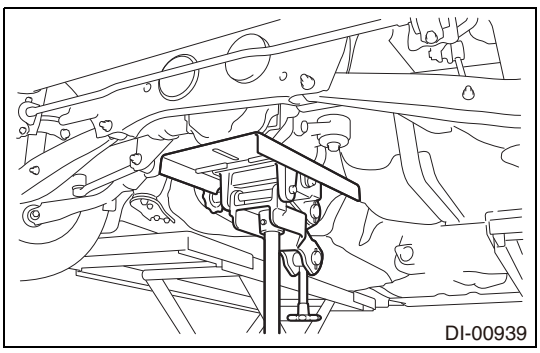

3. Removal of differential carrier ASSY RR
   (1) Using a tall transmission jack, support the differential carrier ASSY RR.
   WARNING:
   - The differential carrier ASSY RR is heavy. Be sure to support it with a tall transmission jack.
   - In order to prevent the differential carrier ASSY RR from being excessively tilted or coming off, perform the operation while holding it with several assistants.

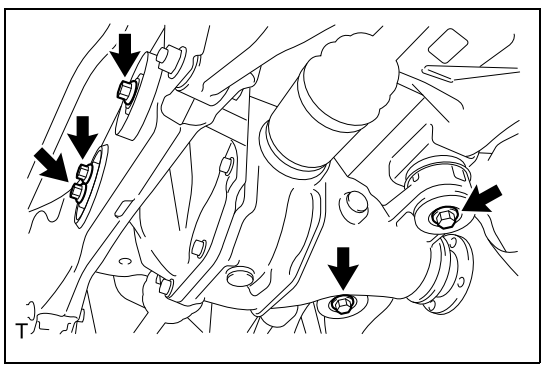

(2) Remove 5 bolts, and then remove the rear differential mount stopper UPR and the rear differential mount stopper LWR.

AD

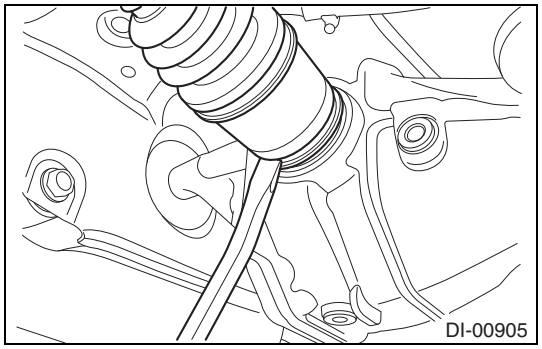

(3) Lower the tall transmission jack slowly. Using a tire lever, etc., detach the rear drive shaft ASSY from the differential carrier ASSY RR as shown in the figure.
CAUTION:
If a tire lever, etc. contacts the rear cover, the cover may be damaged. A tire lever, etc. is allowed to contact the differential carrier.

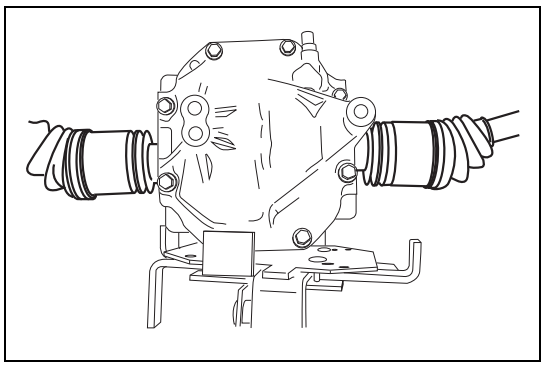

(4) Lower the tall transmission jack. Pull out the rear drive shaft ASSY from the differential carrier ASSY RR, and then remove the differential carrier ASSY RR.

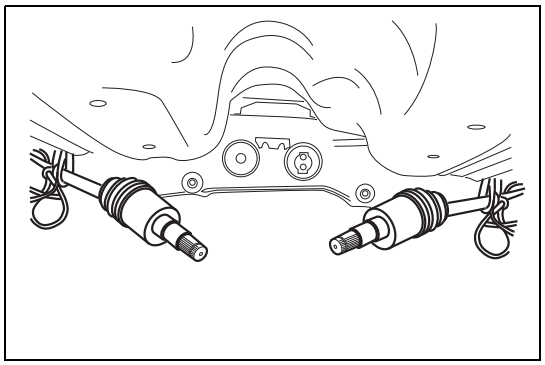

NOTE:
Suspend the detached rear drive shaft ASSY using a string, etc.

AD

Disassembly

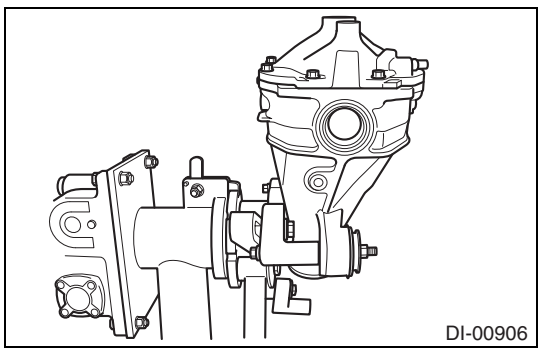

1. Fixation of rear differential carrier ASSY RR
   (1) Install the rear differential carrier to the overhaul stand.

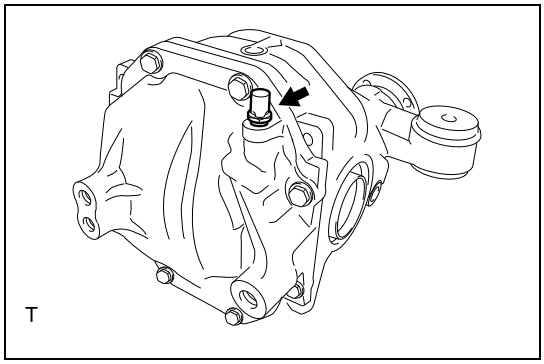

2. Removal of rear differential breather plug
   (1) Remove the differential breather plug from the differential carrier.

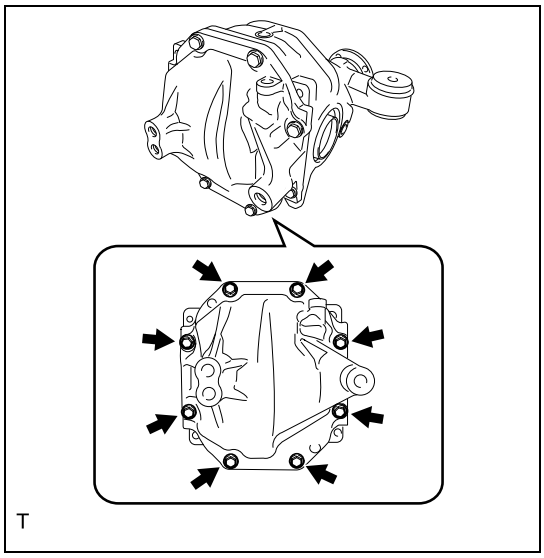

3. Removal of rear differential carrier cover
   (1) Remove the 8 bolts.

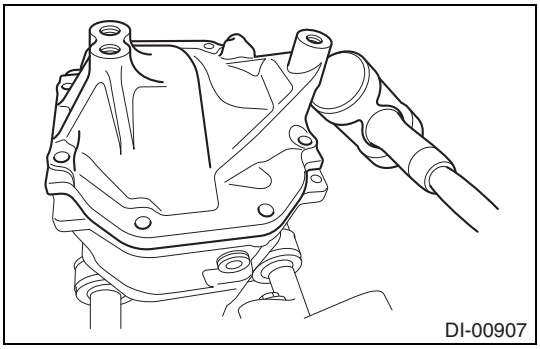

   (2) Using a plastic hammer, lightly tap the rib portion of the differential carrier cover, and remove it from the differential carrier.
   CAUTION:
   Be careful not to damage the mating surface of the differential carrier.

AD

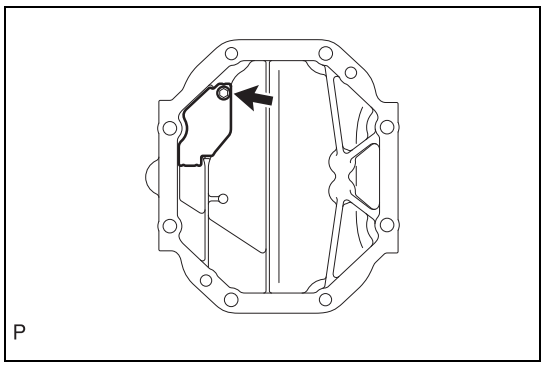

4. Removal of rear differential breather plug oil deflector
   (1) Remove the bolts, and then remove the breather plug oil deflector from the differential carrier cover.

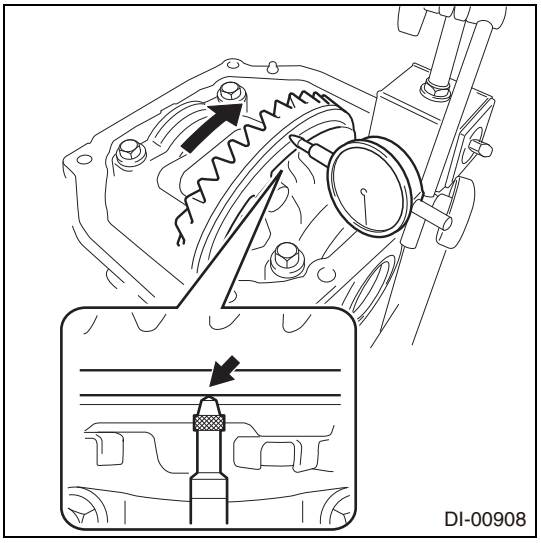

5. Inspection of differential ring gear runout
   (1) Inspect the runout of the ring gear by contacting a dial gauge at a right angle to the back surface of the ring gear.
   Limit: 0.07 mm {0.003 in}
   NOTE:
   If it exceeds the limit, remove the ring gear and inspect runout of the differential case.

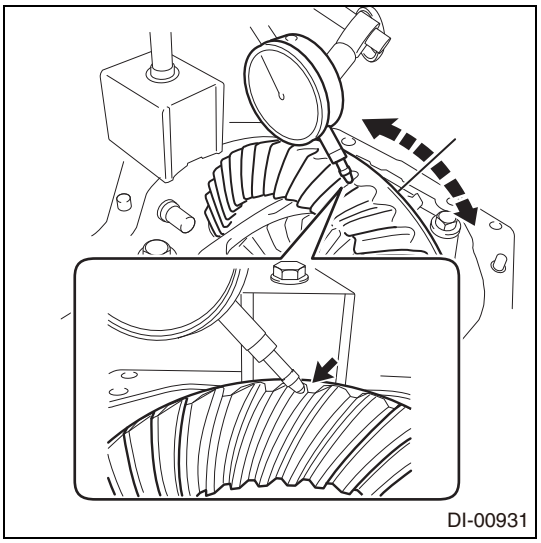

6. Inspection of backlash between differential ring gear and differential drive pinion
   (1) Contact a dial gauge at a right angle to the tooth surface end of the ring gear.
   (2) Secure the companion flange RR by hand, and inspect the ring gear backlash.
   Standard value: 0.13 to 0.18mm {0.005 to 0.007in}
   NOTE:
   Measure at 3 points or more on the ring gear circumference.

AD

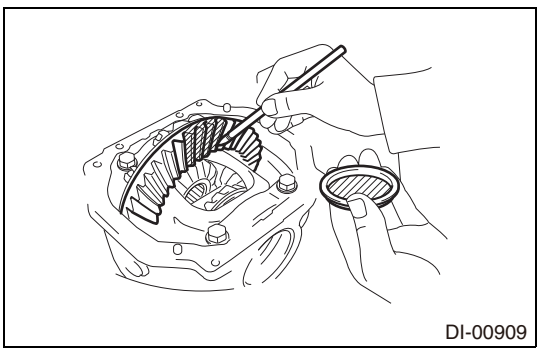

7. Inspection of tooth contact between differential ring gear and differential drive pinion
   (1) Apply a thin uniform coat of red lead on both teeth surfaces of the ring gear.
   (2) Rotate the companion flange RR forward and backward several times.
   (3) Check the tooth contact between the drive pinion and the ring gear.

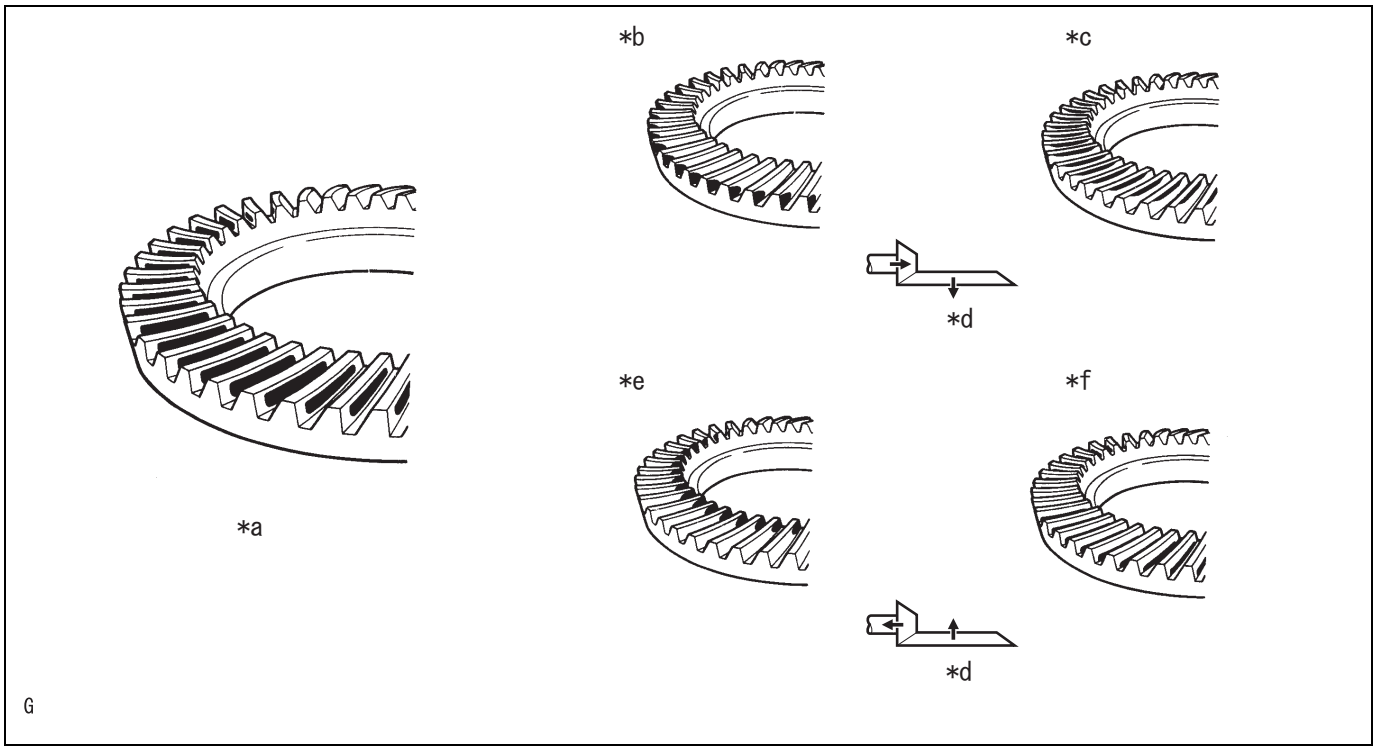

Captions in illustration

*a	Correct tooth contact	*b	Heel contact
*c	Face contact	*d	Adjust the drive pinion and the ring gear in the direction of arrow.
*e	Toe contact	*f	Flank contact

NOTE:

- Check the tooth contact condition at 4 points on the ring gear circumference.
- The pattern shown on red lead is the position of tooth contact.

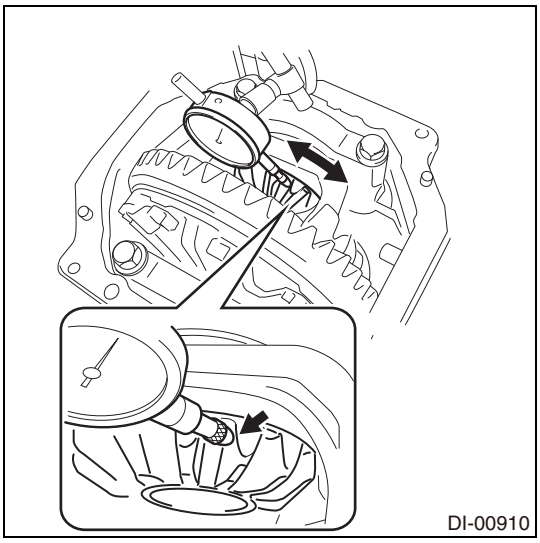

8. Inspection of differential side gear backlash
   (1) Contact a dial gauge at a right angle to the tooth surface end of the differential side gear.
   (2) Secure the differential pinion to the differential case side, and then check that the backlash of differential side gear is 0 mm {0 in}.

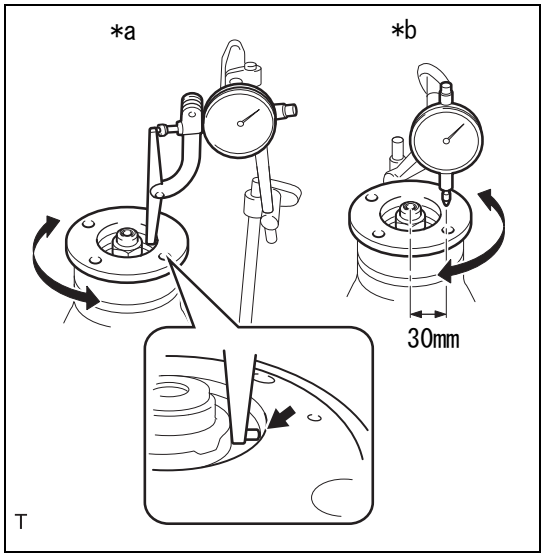

9. Inspection of rear drive pinion companion flange RR runout
   (1) Wipe off the inner surface of the companion flange RR with a cloth to remove dust or foreign matter.

Captions in illustration

*a	Inspection of radial runout
*b	Inspection of lateral runout

   (2) Inspection of companion flange RR radial runout
      (a) Contact the lever type probe of a dial gauge at a right angle to the inner circumference of the companion flange RR.
      (b) Inspect radial runout of the companion flange RR.
         Limit: 0.09mm {0.004in}
   (3) Inspection of companion flange RR lateral runout
      (a) Contact a dial gauge at a right angle to the surface of the companion flange RR as shown in the figure.
      (b) Inspect lateral runout of the companion flange RR.
         Limit: 0.09mm {0.004in}

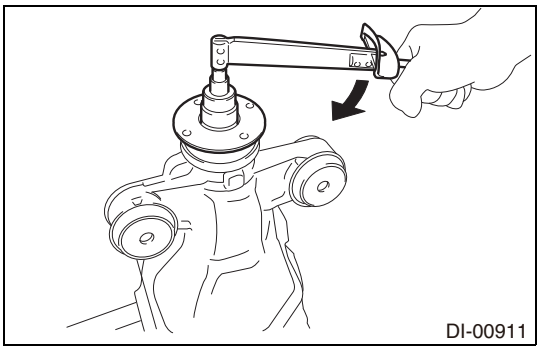

10. Inspection of differential drive pinion preload
   (1) Using a socket wrench (30 mm) and a torque wrench, check preload of the drive pinion within the ring gear backlash.

Standard value	T = 1.87 to 2.17 N·m {19.1 to 22.1 kgf·cm} {1.38 to 1.60ft·lbf}

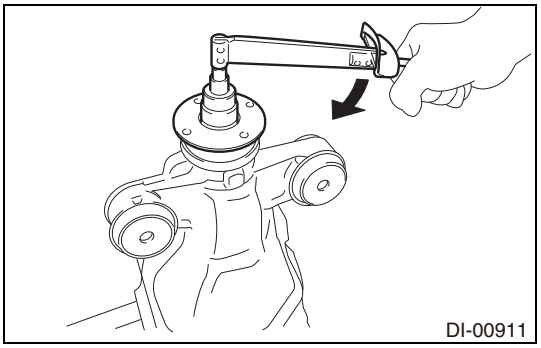

11. Inspection of overall preload
   (1) Using a socket wrench (30 mm) and a torque wrench, check overall preload with the drive pinion contacting the ring gear tooth surface.

Standard value	T = 2.19 to 2.70N·m {22.3 to 27.5 kgf·cm} {1.62 to 1.99ft·lbf}

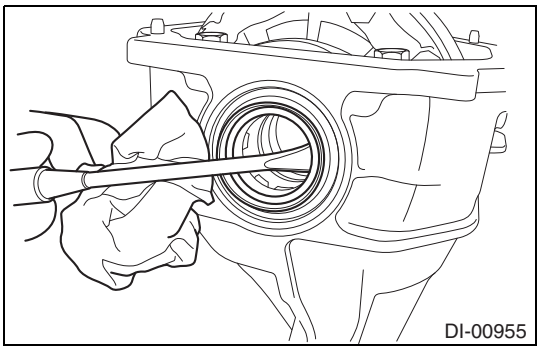

12. Removal of rear differential side gear shaft oil seal
   (1) Using a flat tip screwdriver, remove the right and left side oil seals from the differential carrier.

AD

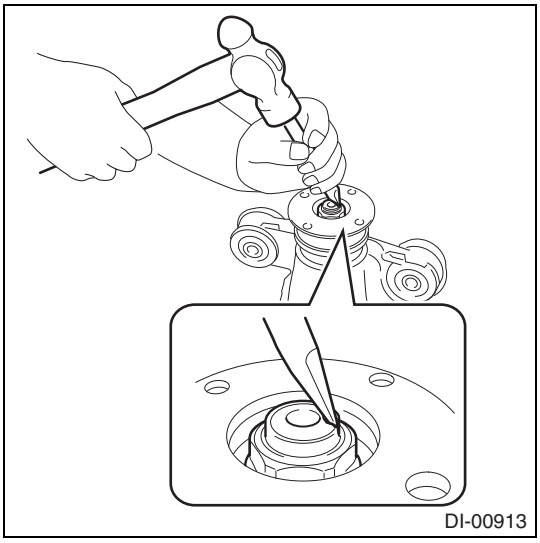
DI-00913

13. Removal of rear drive pinion nut
    (1) Release the crimp of the drive pinion nut using a chisel and a hammer.
    CAUTION:
    In order to prevent the thread of the drive pinion from being damaged, completely release the crimp of the nut.

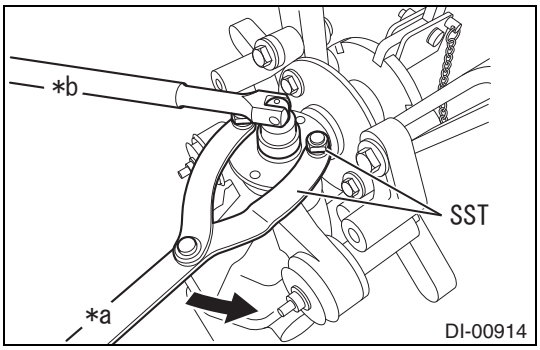

DI-00914

    (2) Using the SST, secure the companion flange RR.
    SST 18355AA000, 18334AA000

Captions in illustration

*a	Drive
*b	Hold

    (3) Using a socket wrench (30 mm), remove the drive pinion nut from the differential carrier.
    WARNING:
    During operation, support the overhaul stand.

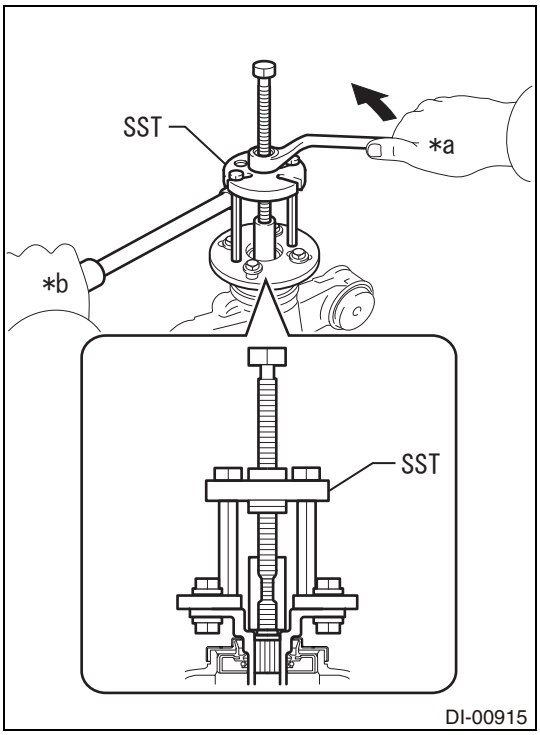

DI-00915

14. Removal of rear drive pinion companion flange RR
    (1) Using the SST, remove the companion flange RR from the differential carrier.
    SST 09950-30012 (09951-03010, 09953-03010, 09954-03010, 09955-03030, 09956-03030)

Captions in illustration

*a	Drive
*b	Hold

    NOTE:
    - Apply grease to the thread and end portions of the SST center bolt (09953-03010) before using it.
    - The bolts and nuts used for securing the SST and the companion flange RR are recommended to be M8 ×P1.25 with a bolt length of approx. 40 mm {1.6 in}.

15. Removal of rear differential dust deflector
    NOTE:
    Perform the operation only when the dust deflector is damaged.

AD

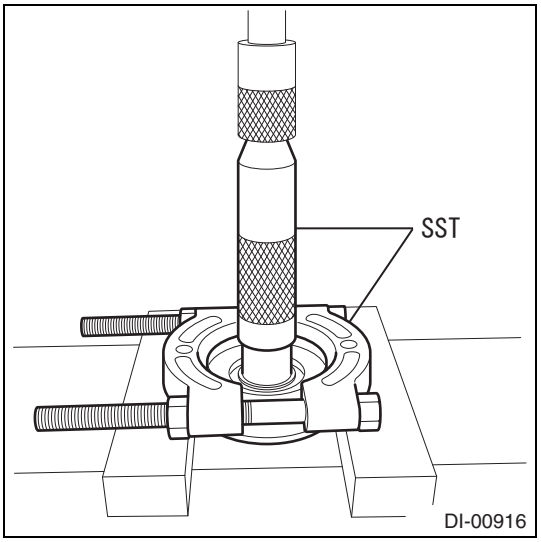

(1) Using the SST and a press, remove the dust deflector from the companion flange RR.
SST 09950-00020, 499877000
CAUTION:
Be careful not to drop the companion flange RR.
NOTE:
In order to ensure the contact surface between the SST and the dust deflector, perform the operation while tightening the nut of the SST.

16. Removal of rear differential carrier oil seal (Refer to AD - 28)

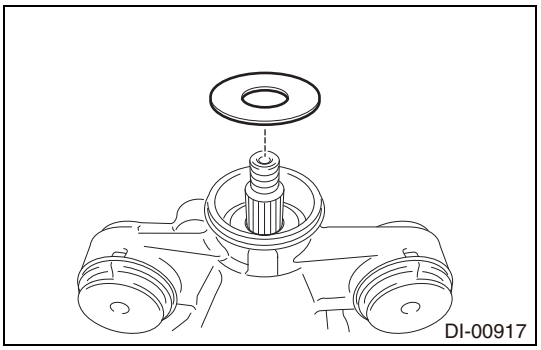

17. Removal of rear differential drive pinion oil slinger
(1) Using a magnet hand, remove the oil slinger from the differential carrier.

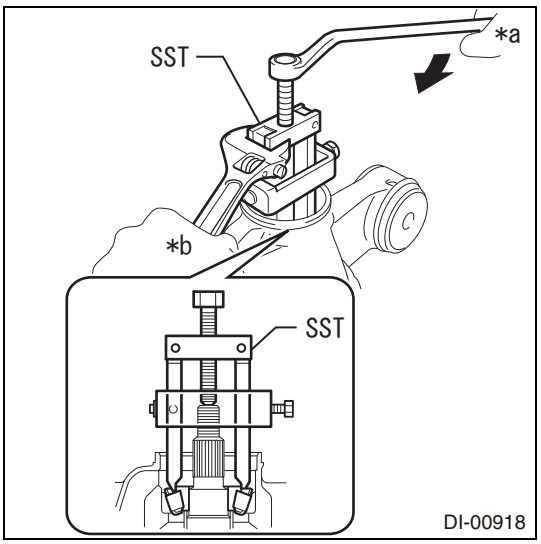

18. Removal of rear drive pinion tapered roller bearing FR
(1) Using the SST, remove the tapered roller bearing FR (inner race) from the differential carrier.
SST 09556-22010

Captions in illustration

*a	Drive
*b	Hold

NOTE:
Apply grease to the thread and end portions of the SST center bolt before using it.

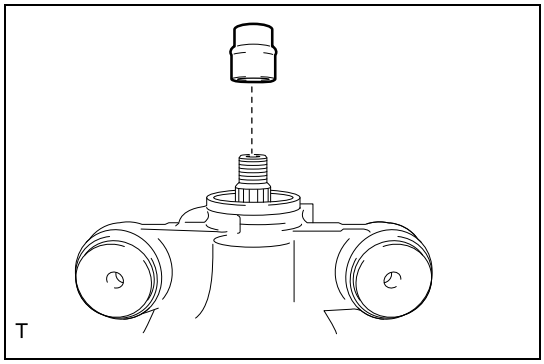

19. Removal of rear differential drive pinion bearing spacer
(1) Remove the bearing spacer from the drive pinion.

AD

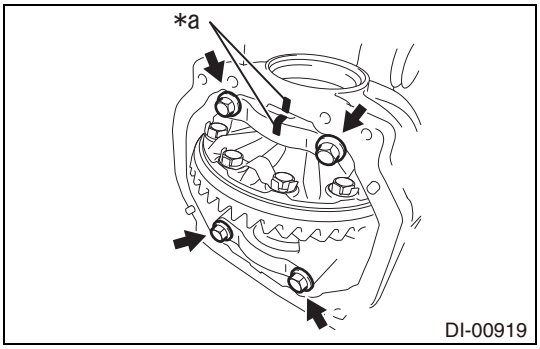

20. Removal of rear differential carrier
    (1) Place an identification mark on the bearing cap and the differential carrier.

Captions in illustration

*a	Identification mark

NOTE:
Place an identification mark on one end only.

(2) Remove 4 bolts, and remove 2 bearing caps from the differential carrier.
CAUTION:
The bearing cap and the carrier are manufactured as a unit; do not change the combination.

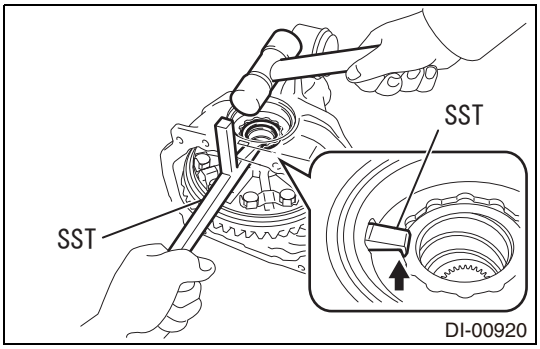

(3) Using the SST and a plastic hammer, remove the right and left side gear shaft washers from the differential carrier.
SST 09504-22012
NOTE:
- For reference when reassembling, record thickness of the right and left (back face side and tooth face side) side gear shaft washers.
- Place a right or left identification mark (back face side or tooth face side) on the side gear shaft washers, and arrange them separately.

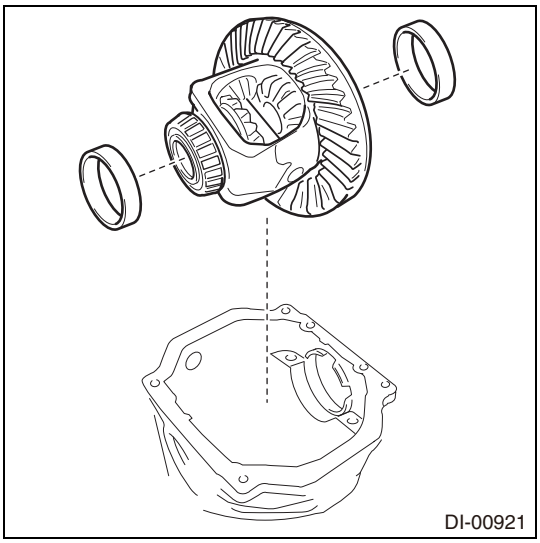

(4) Remove the differential case and the case bearing (outer race) as a single unit from the differential carrier.
CAUTION:
Be careful not to damage the differential case bearing and the ring gear.
NOTE:
Place a right or left identification mark (back face side or tooth face side) on the case bearing (outer race), and arrange them separately.

21. Removal of rear drive pinion tapered roller bearing RR
    (1) Remove the drive pinion from the differential carrier.

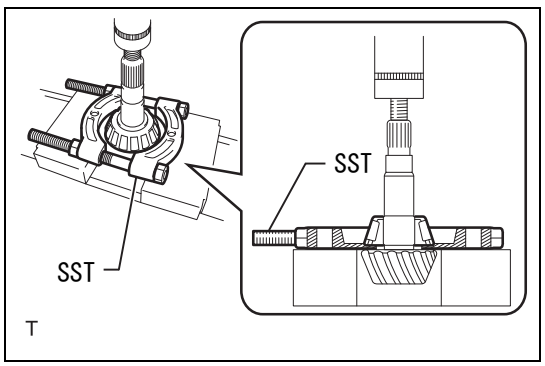

(2) Using the SST and a press, remove the tapered roller bearing RR (inner race) from the drive pinion.
SST 09950-00020
CAUTION:
Be careful not to drop the drive pinion.
NOTE:
In order to ensure the contact surface between the SST and the tapered roller bearing RR (inner race), perform the operation while tightening the nut of the SST.

(3) Remove the drive pinion washer from the drive pinion.

AD

NOTE:
For reference when reassembling, record thickness of the drive pinion washer.

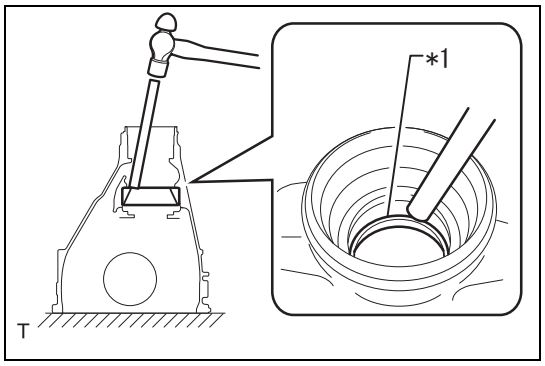

(4) Using a brass bar and a hammer, lightly and evenly tap the entire perimeter of the tapered roller bearing RR (outer race), and remove it from the differential carrier.

Captions in illustration

*1	Outer race

CAUTION:
Always let the brass bar come in contact with the range of the tapered roller bearing RR (outer race) during operation. Be careful not to damage the differential carrier.

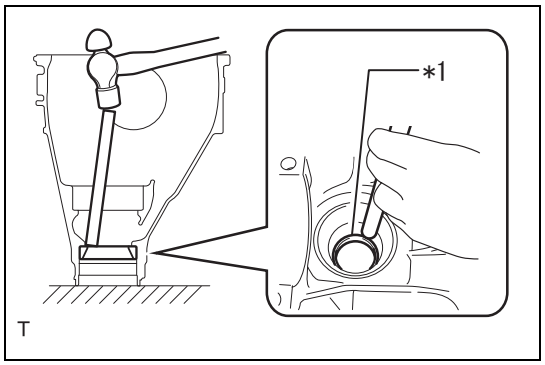

22. Removal of rear drive pinion tapered roller bearing FR

(1) Using a brass bar and a hammer, lightly and evenly tap the entire perimeter of the tapered roller bearing FR (outer race), and remove it from the differential carrier.

Captions in illustration

*1	Outer race

CAUTION:
Always let the brass bar come in contact with the range of the tapered roller bearing RR (outer race) during operation. Be careful not to damage the differential carrier.

23. Removal of differential ring gear

(1) Using aluminum plates in between, secure the differential case in a vise.

CAUTION:
Do not vise excessively.

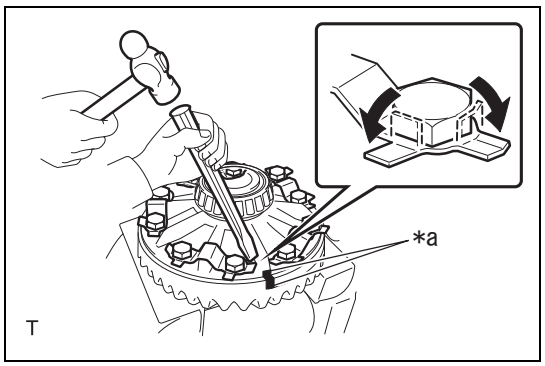

(2) Place an alignment mark on the differential case and the ring gear.

Captions in illustration

*a	Alignment marks

(3) Release the crimps of 5 lock plates using a chisel and a hammer.

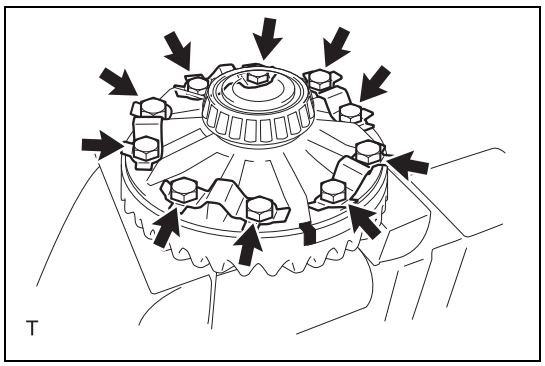

(4) Remove 10 bolts and 5 lock plates from the differential case.

AD

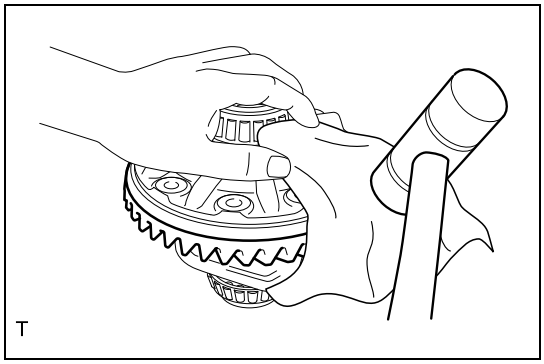

(5) Using a plastic hammer, evenly tap the periphery of the ring gear, and remove the ring gear from the differential case.
NOTE:
Cover the tooth surface side of the ring gear with a cloth to prevent damage.

24. Inspection of differential case ASSY runout
NOTE:
Perform only when the inspection result of the differential ring gear runout exceeds the limit.

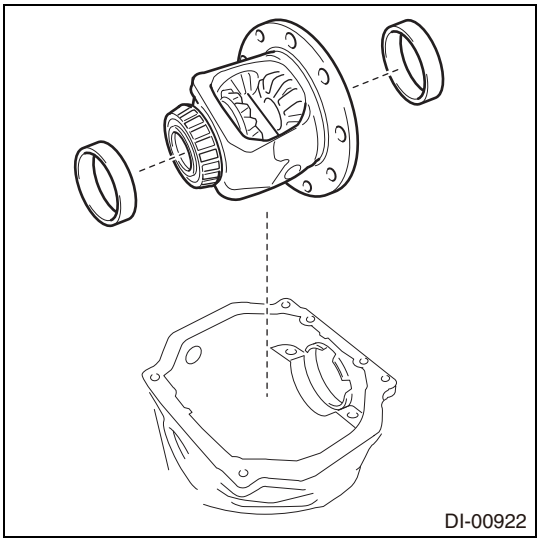

(1) Install the case bearing (outer race LH/RH) to the case bearing (inner race LH/RH), and install the differential case to the differential carrier.
CAUTION:
- When installing the bearing outer races, do not confuse the left and right.
- Be careful not to damage the differential case bearing.

(2) Install the right and left (back face side and tooth face side) side gear shaft washer to the differential carrier while avoiding play of the case bearing.

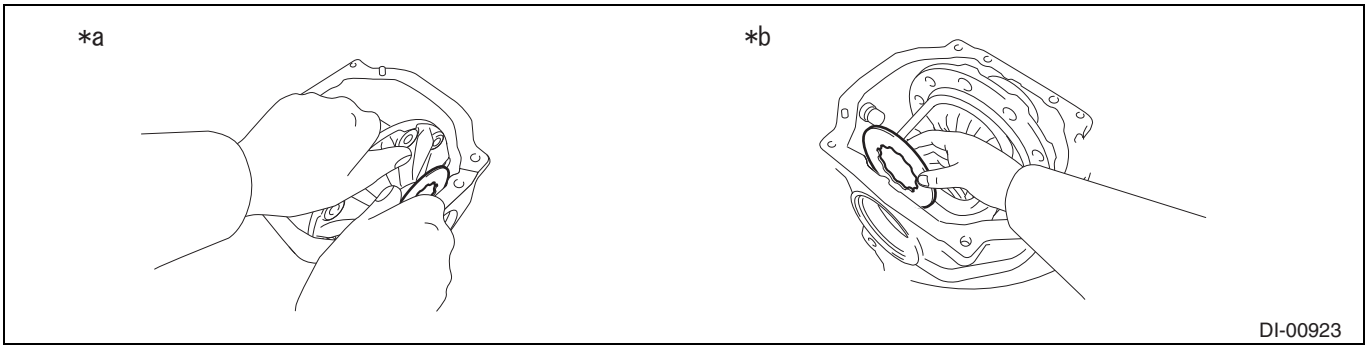

Captions in illustration

*a	Back face side	*b	Tooth face side

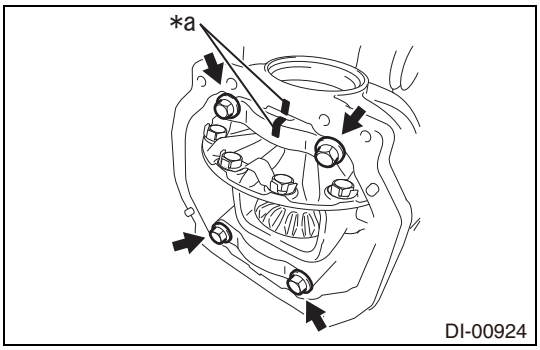

(3) Install the right and left bearing caps to the differential carrier with 4 bolts.

Captions in illustration

*a	Identification mark

Standard value:T=85N·m {867kgf·cm} {62.7ft·lbf}
CAUTION:
The bearing cap and the carrier are manufactured as a unit; do not change the combination.

AD

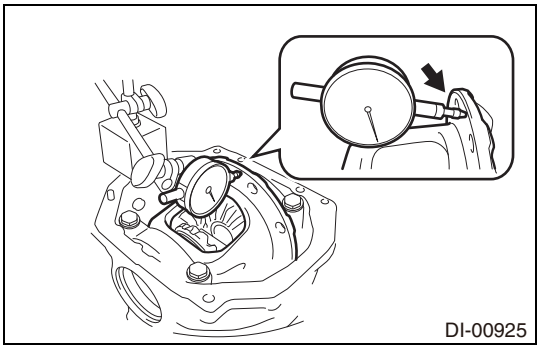

(4) Contact a dial gauge at a right angle to the flange surface of the differential case.

(5) Check runout of the differential case.
Limit: 0.07 mm {0.003 in}

(6) Remove 4 bolts, and remove 2 bearing caps from the differential carrier.

(7) Remove the differential case, right and left case bearings and right and left side gear shaft washers from the differential carrier.
CAUTION:
Be careful not to damage the differential case bearing.

25. Removal of rear differential case bearing
NOTE:
Perform the operation only when the case bearing or the differential case is replaced.

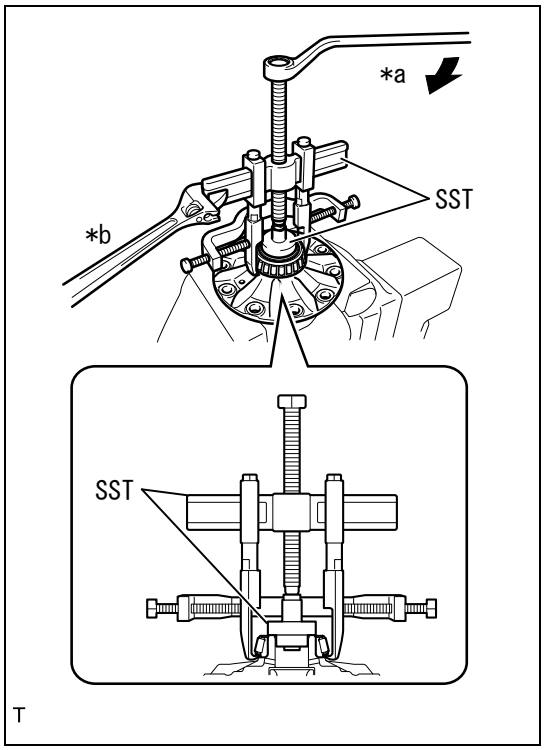

(1) Using the SST, remove the case bearings (inner race LH and RH) from the differential case.
SST 09950-40011 (09951-04020, 09952-04010, 09953-04030, 09954-04010, 09955-04061, 09957-04010, 09958-04011), 09950-60010 (09951-00350, 09951-00480, 09952-06010)

Captions in illustration

*a	Drive
*b	Hold

CAUTION:
Be careful not to deform the cage of the differential case bearing. (When the bearing is reused)
NOTE:
- Apply grease to the thread and end portions of the SST center bolt (09953-04030) before using it.
- Pinch the bearing inner race from the cutout portion of the differential case using the claws of the SST.
- Place a right or left identification mark (back face side or tooth face side) on the differential case bearings, and arrange them separately.

AD

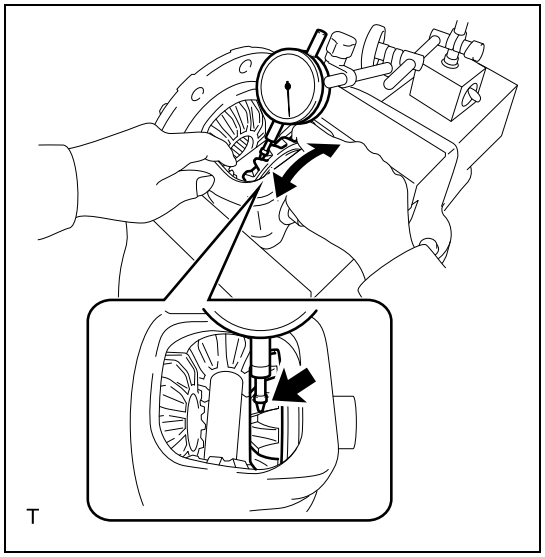

26. Inspection of differential side gear backlash
    (1) Using aluminum plates in between, secure the differential case in a vise.
    CAUTION:
    Do not vise excessively.
    (2) Contact a dial gauge at a right angle to the tooth surface end of the differential side gear, secure the differential pinion gear to the differential case, and then check that the backlash is 0 mm {0 in}.
    NOTE:
    If the backlash is not 0 mm {0 in}, replace the differential case ASSY.

Assembly

1. Installation of differential ring gear
    (1) Clean the screw hole of the differential case.

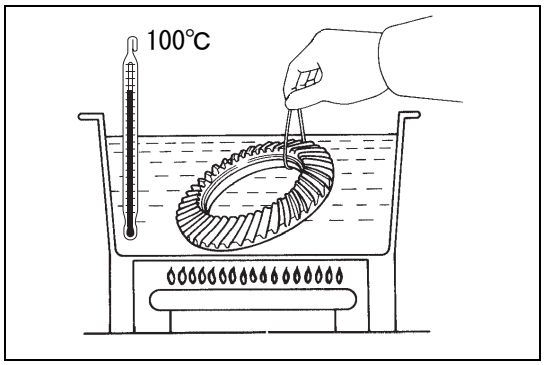

    (2) Heat the ring gear up to 100°C {212°F} with hot water.
    WARNING:
    The ring gear becomes hot. Perform the operation after protecting hands with thick gloves.
    (3) Completely wipe off grease and water from the mating surface of the differential case and the ring gear.
    (4) Using aluminum plates in between, secure the differential case in a vise.
    CAUTION:
    Do not vise excessively.
    (5) Completely wipe off grease and water from the ring gear (mating surface of the differential case).

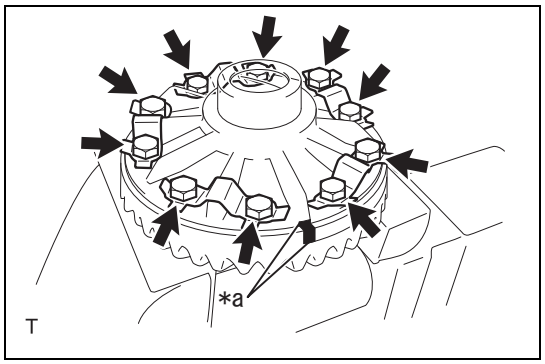

    (6) Align the alignment marks on the differential case and the ring gear, and then quickly install the ring gear to the differential case.

Captions in illustration

*a	Alignment marks

    CAUTION:
    Align the bolt hole of the differential case and the screw hole of the ring gear.
    (7) Temporarily tighten 10 differential case bolts several times through 5 new lock plates, and then tighten them to the specified torque.
    Standard value:T=97N·m {989kgf·cm} {71.5ft·lbf}
    CAUTION:
    Tighten the bolts after the ring gear cools down sufficiently.
    NOTE:
    Tighten the bolts diagonally in several stages.

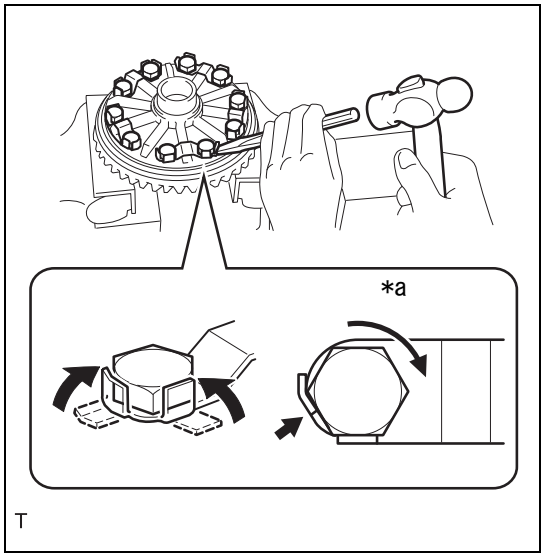

(8) Release the crimps of the lock plate using a chisel and a hammer to counter the rotation.

Captions in illustration

*a	Tightening direction

NOTE:
If the crimp contacts the angled portion of the bolt head and should be divided into 2 sections, the section facing the tightening side of the bolt head must be in close contact as shown in the figure.

2. Installation of rear differential case bearing

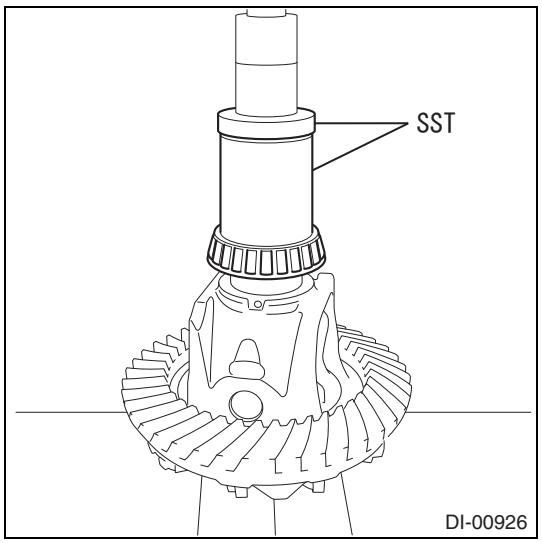

(1) Using the SST and a press, press-fit the case bearings (inner race LH and RH) into the differential case.
SST 09710-30012 (09710-04081), 398477702
NOTE:
- Press until the case bearing is in close contact with the differential case.
- Align the SST in the center of the differential case.

CAUTION:
- When using new bearings, do not apply differential gear oil.
- Be careful not to deform the cage of the bearing.
- When replacing the bearing, replace the outer race and the inner race as a set.

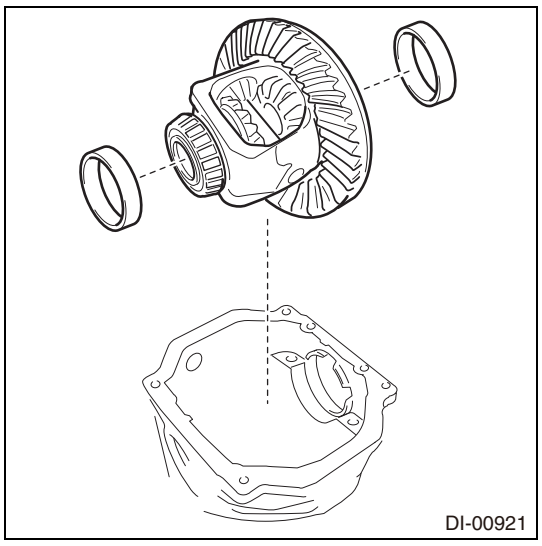

3. Inspection of differential ring gear runout

(1) Install the case bearing (outer race LH and RH) to the case bearing (inner race LH and RH), and install the differential case to the carrier.
CAUTION:
- When installing the bearing outer races, do not confuse the left and right.
- When using new bearings, do not apply differential gear oil.

(2) Install the right and left (back face side and tooth face side) side gear shaft washer to the differential carrier while avoiding play of the case bearing.

AD

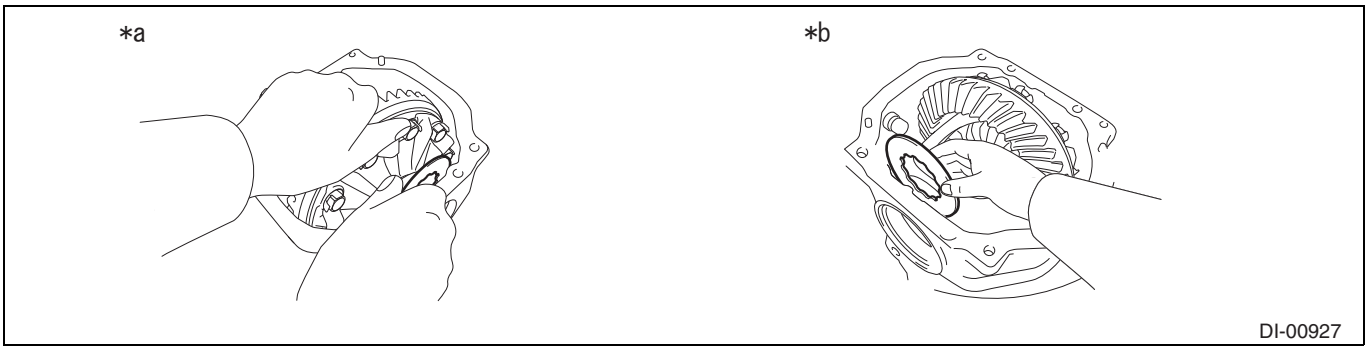

Captions in illustration

*a	Back face side	*b	Tooth face side

NOTE:

- When the final gear set (drive pinion & ring gear) and the case bearings are replaced, select a side gear shaft washer with thin thickness and install it.
- When the drive pinion, ring gear and case bearings are reused, select a side gear shaft washer with the same thickness as that of the one before disassembly and install it.

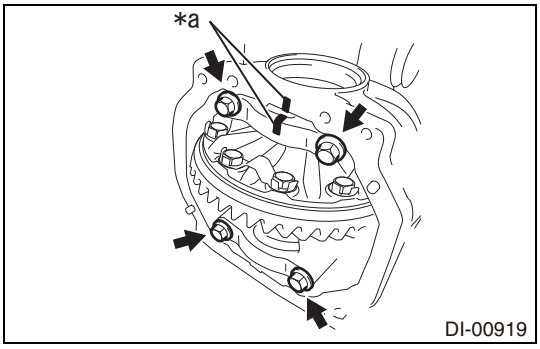

(3) Install the right and left bearing caps to the differential carrier with 4 bolts.

Captions in illustration

*a	Identification mark

Standard value:T=85N·m {867kgf·cm} {62.7ft·lbf}

CAUTION:

The bearing cap and the carrier are manufactured as a unit; do not change the combination.

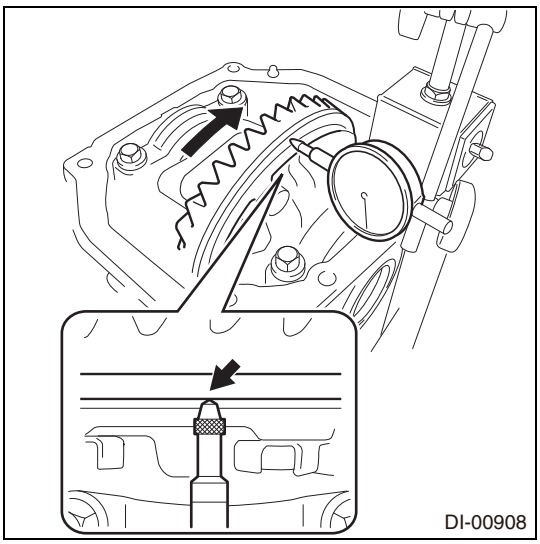

(4) Contact a dial gauge at a right angle to the back surface of the ring gear.

(5) Check for runout of the ring gear.

Limit: 0.07 mm {0.003 in}

AD

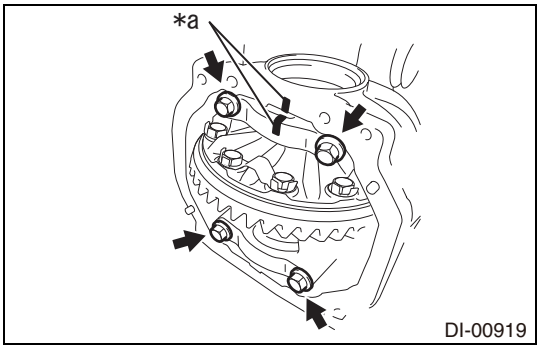

(6) Remove 4 bolts, and remove 2 bearing caps from the differential carrier.

Captions in illustration

*a	Identification mark

(7) Remove the right and left side gear shaft washers from the differential carrier.

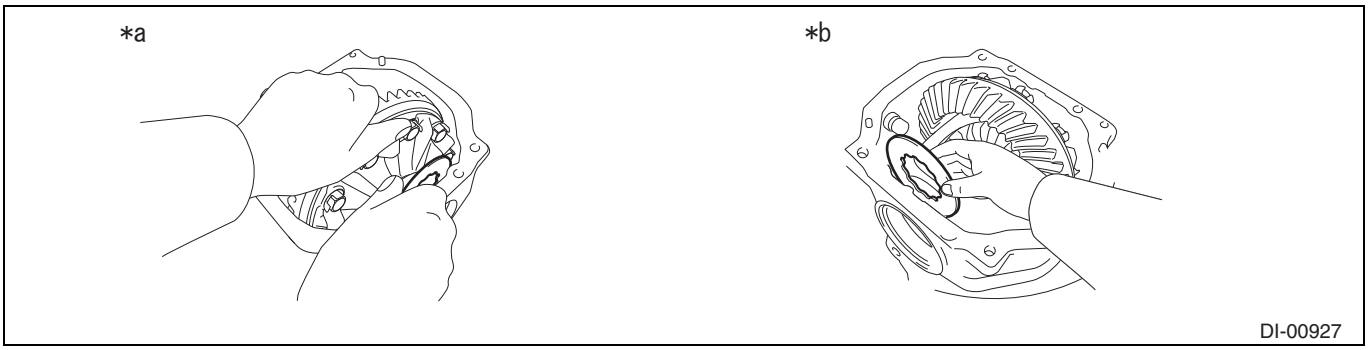

Captions in illustration

*a	Back face side	*b	Tooth face side

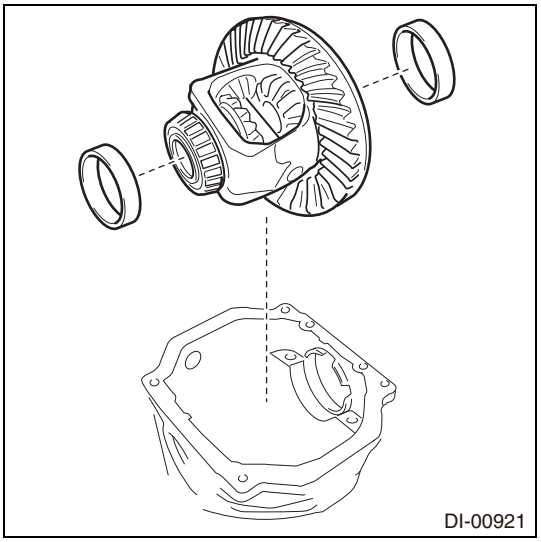

(8) Remove the differential case and right and left case bearings from the differential carrier.

CAUTION:

Be careful not to damage the differential case bearing and the ring gear.

AD

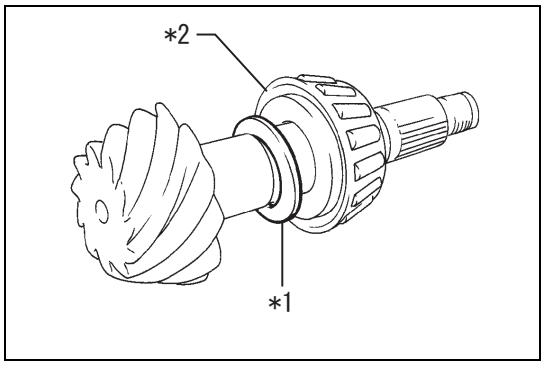

4. Installation of rear drive pinion tapered roller bearing RR

(1) Install the drive pinion washer to the drive pinion.

Captions in illustration

*1	Drive pinion washer
*2	Inner race

NOTE:

- In order to prevent the drive pinion washer from dropping, temporarily install the tapered roller bearing RR (inner race).
- Install the drive pinion washer with the same thickness as that of the removed one.
- The drive pinion washer has no installation direction.

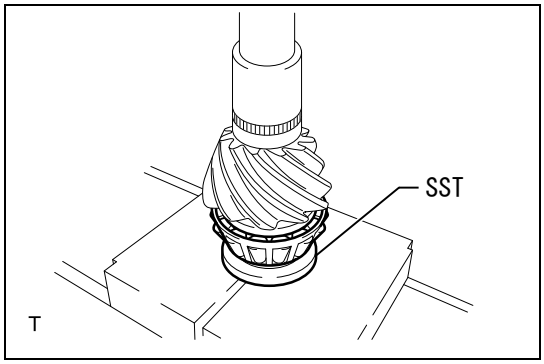

(2) Using the SST and a press, press-fit the tapered roller bearing RR (inner race) into the drive pinion.
SST 09506-30012
CAUTION:
When using new bearings, do not apply differential gear oil.

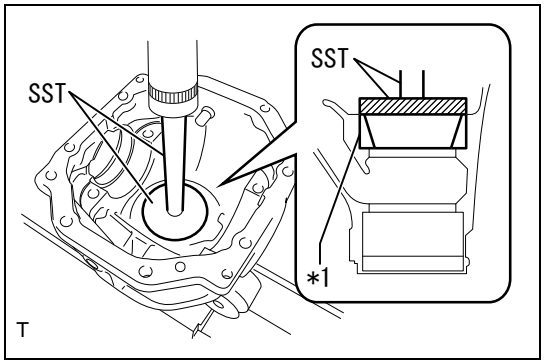

(3) Using the SST and a press, press-fit the tapered roller bearing RR (outer race) into the differential carrier.
SST 09950-60020 (09951-00890), 09950-70010 (09951-07200)

Captions in illustration

*1	Outer race

CAUTION:
When using new bearings, do not apply differential gear oil.

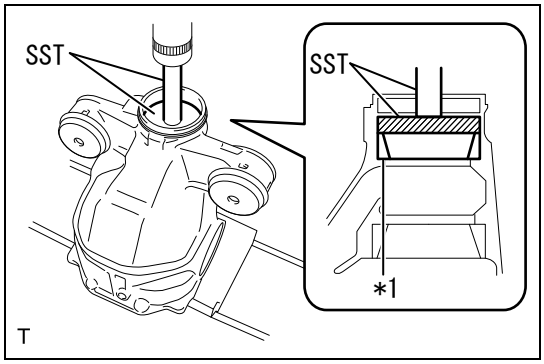

5. Installation of rear drive pinion tapered roller bearing FR
(1) Using the SST and a press, press-fit the tapered roller bearing FR (outer race) into the differential carrier.
SST 09950-60020 (00951-00720), 09950-70010 (09951-07100)

Captions in illustration

*1	Outer race

CAUTION:
When using new bearings, do not apply differential gear oil.

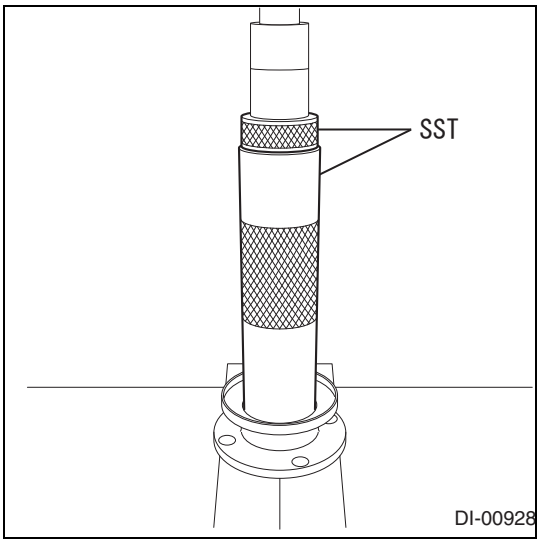

6. Installation of rear differential dust deflector
(1) Using the SST and a press, press-fit a new dust deflector into the companion flange RR.
SST 499277200, 499225500
CAUTION:
- When press-fitting, gradually insert the dust deflector while checking the condition.
- Do not press-fit excessively.
- Remove a burr if it occurs when press-fitting.

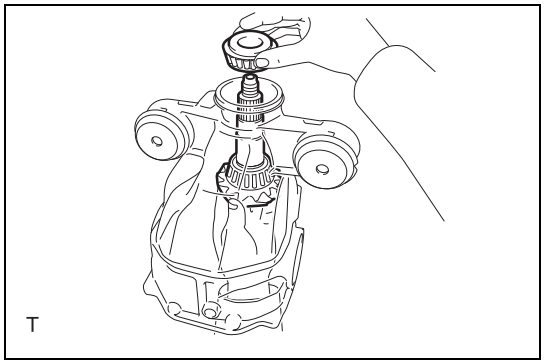

7. Adjustment of differential drive pinion preload
   (1) While supporting the drive pinion by hand, install the drive pinion tapered roller bearing FR (inner race) to the differential carrier.
   CAUTION:
   - Be careful not to drop the drive pinion.
   - In order to check the tooth contact of the ring gear, install the spacer and oil seal after checking and adjusting the tooth contact.
   - When using new bearings, do not apply differential gear oil.

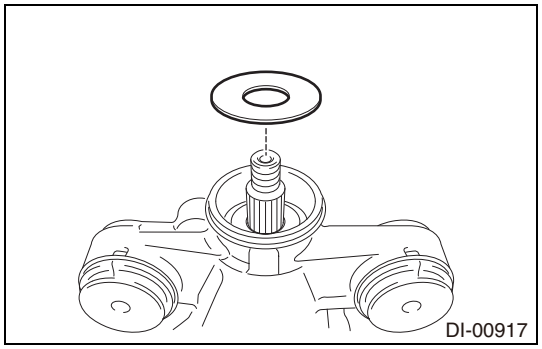

   (2) Install the oil slinger to the differential carrier.

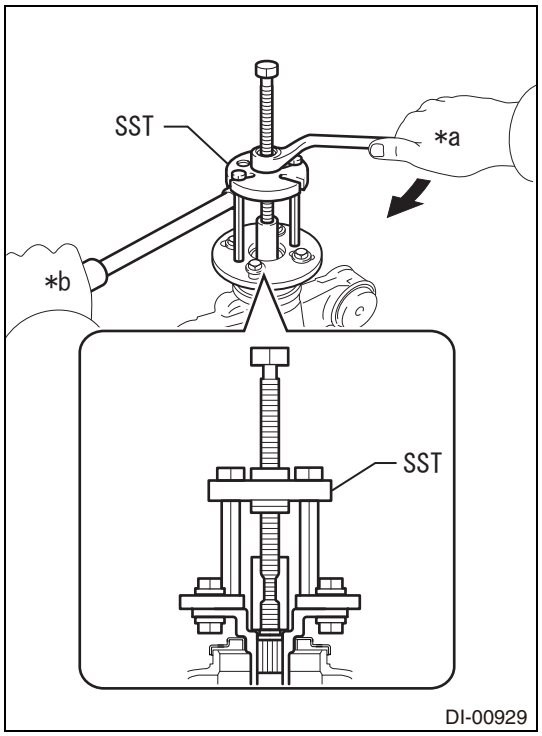

   (3) Using the SST, install the companion flange RR to the differential carrier.
   SST 09950-30012 (09951-03010, 09953-03010, 09954-03010, 09955-03030, 09956-03030)

Captions in illustration

*a	Drive
*b	Hold

   CAUTION:
   - Be careful not to drop the drive pinion. Support it by hands until the SST is installed.
   - The bearing spacer is not installed, therefore, install the companion flange RR until there is a small play in the drive pinion.

   NOTE:
   - Apply grease to the thread and end portions of the SST center bolt (09953-03010) before using it.
   - The bolts and nuts used for securing the SST and the companion flange RR are recommended to be M8 ×P1.25 with a bolt length of approx. 40 mm {1.6 in}.

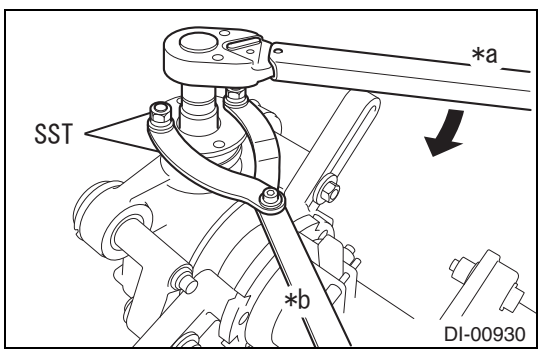

   (4) Using the SST, secure the companion flange RR.
   SST 18355AA000, 18334AA000

Captions in illustration

*a	Drive
*b	Hold

   (5) Using a socket wrench (30 mm) and a torque wrench, gradually tighten a new drive pinion nut to the specified preload.
   Limit: T = 338 N·m {3447 kgf·cm} {249.3 ft·lbf}
   WARNING:
   During operation, support the overhaul stand.

AD

CAUTION:
Note that no bearing spacer is inserted. Therefore, tighten the nut gradually. Never overtighten it.
NOTE:
- Tighten to approx. 100 N·m {1020 kgf·cm} {73.8 ft·lbf} while checking the preload.
- Apply differential gear oil to the thread portions of the nut and the drive pinion.

(6) Turn it forward and backward several times to seat the bearing properly.

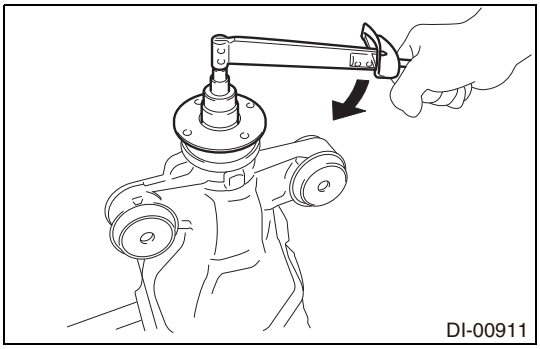
DI-00911

(7) Using a socket wrench (30 mm) and a torque wrench, check preload of the drive pinion.

Standard value	When the bearing is new	T = 1.77 to 2.14N·m {18.0 to 21.8 kgf·cm} {1.31 to 1.58ft·lbf}
	When the bearing is reused	T = 1.77 to 2.07N·m {18.0 to 21.1 kgf·cm} {1.31 to 1.53ft·lbf}

CAUTION:
For inspection of overall preload, record the preload.

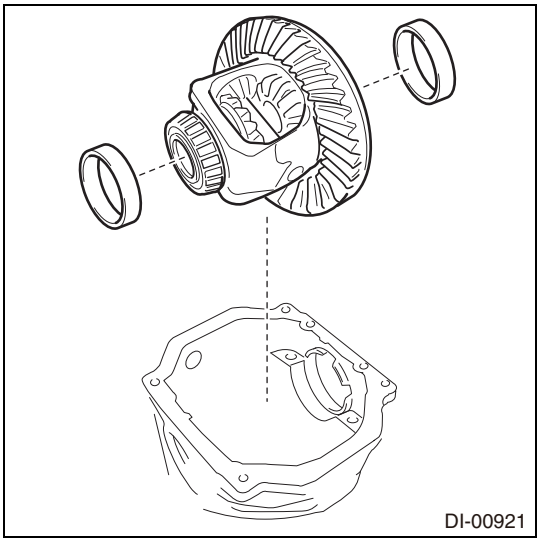
DI-00921

8. Installation of rear differential case SUB-ASSY
   (1) Install the case bearing (outer race LH and RH) to the case bearing (inner race LH and RH), and install the differential case to the differential carrier.
   CAUTION:
   When installing the bearing outer races, do not confuse the left and right.
   (2) Install the right and left (back face side and tooth face side) side gear shaft washer to the differential carrier while avoiding play of the case bearing.

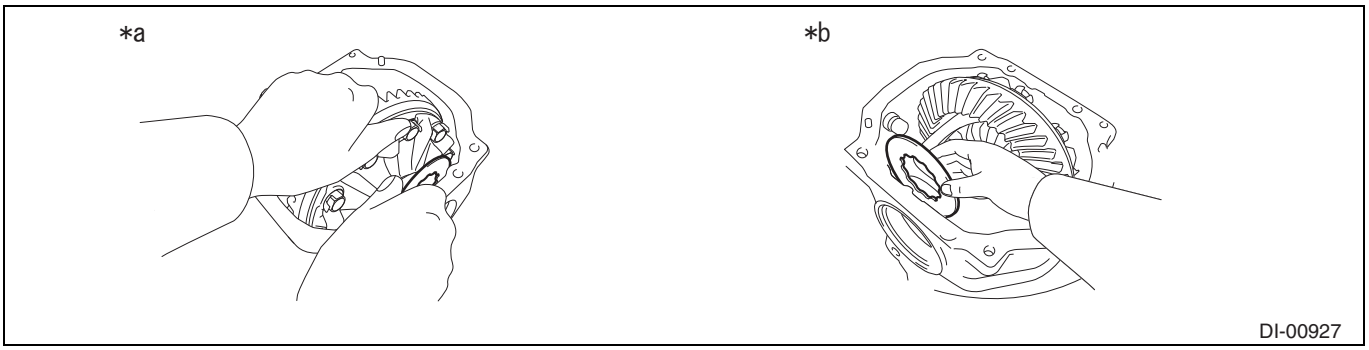

DI-00927

Captions in illustration

*a	Back face side	*b	Tooth face side

NOTE:
- When the final gear set (drive pinion & ring gear) and the differential case bearings are replaced, select a differential side gear shaft washer with thin thickness and install it.

- When the drive pinion, ring gear and differential case bearings are reused, select a differential side gear shaft washer with the same thickness as that of the disassembled one and install it.

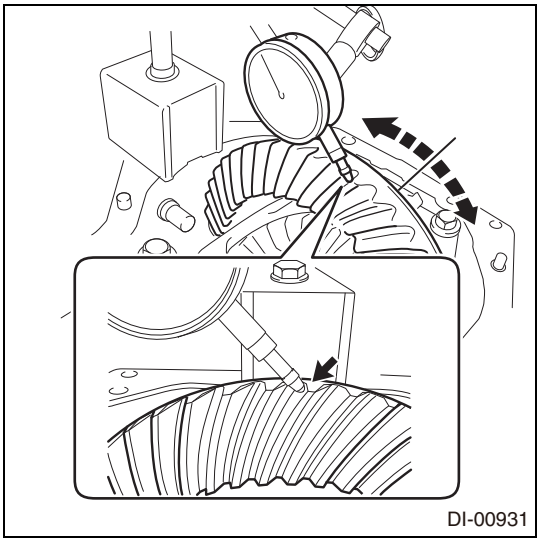
DI-00931

9. Inspection and adjustment of backlash between differential ring gear and differential drive pinion
   (1) Contact a dial gauge at a right angle to the tooth surface end of the ring gear.
   (2) Secure the companion flange RR by hand, and inspect the ring gear by moving it.
   Standard value: 0.13 to 0.18mm {0.005 to 0.007in}
   NOTE:
   - Inspect at 3 points or more on the ring gear circumference.
   - Record the measured value for reference when selecting the side gear shaft washer.
   - For reference when selecting the side gear shaft washer, inspect the tooth contact between the differential ring gear and the drive pinion.

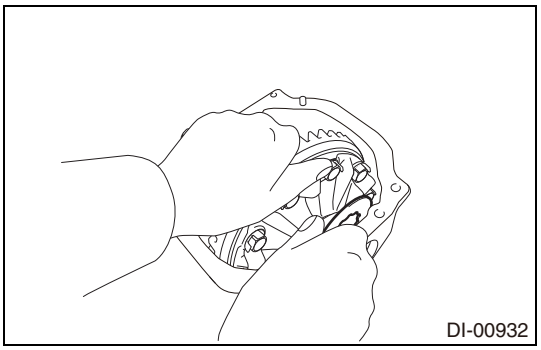
DI-00932

   (3) Select the side gear shaft washer which allows the ring gear's backlash to be within the standard value, and install it to the back face side of the ring gear.

Type of rear differential side gear shaft washer

Thickness (mm {in})	Identification mark	Thickness (mm {in})	Identification mark
2.57 to 2.59 {0.1012 to 0.1020}	01	3.03 to 3.05 {0.1193 to 0.1201}	47
2.59 to 2.61 {0.1020 to 0.1028}	32	3.05 to 3.07 {0.1201 to 0.1209}	17
2.61 to 2.63 {0.1028 to 0.1035}	33	3.07 to 3.09 {0.1209 to 0.1217}	48
2.63 to 2.65 {0.1035 to 0.1043}	03	3.09 to 3.11 {0.1217 to 0.1224}	49
2.65 to 2.67 {0.1043 to 0.1051}	34	3.11 to 3.13 {0.1224 to 0.1232}	19
2.67 to 2.69 {0.1051 to 0.1059}	35	3.13 to 3.15 {0.1232 to 0.1240}	50
2.69 to 2.71 {0.1059 to 0.1067}	05	3.15 to 3.17 {0.1240 to 0.1248}	51
2.71 to 2.73 {0.1067 to 0.1075}	36	3.17 to 3.19 {0.1248 to 0.1256}	21
2.73 to 2.75 {0.1075 to 0.1083}	37	3.19 to 3.21 {0.1256 to 0.1264}	52
2.75 to 2.77 {0.1083 to 0.1091}	07	3.21 to 3.23 {0.1264 to 0.1272}	53
2.77 to 2.79 {0.1091 to 0.1098}	38	3.23 to 3.25 {0.1272 to 0.1280}	23
2.79 to 2.81 {0.1098 to 0.1106}	39	3.25 to 3.27 {0.1280 to 0.1287}	54
2.81 to 2.83 {0.1106 to 0.1114}	09	3.27 to 3.29 {0.1287 to 0.1295}	55
2.83 to 2.85 {0.1114 to 0.1122}	40	3.29 to 3.31 {0.1295 to 0.1303}	25
2.85 to 2.87 {0.1122 to 0.1130}	41	3.31 to 3.33 {0.1303 to 0.1311}	56
2.87 to 2.89 {0.1130 to 0.1138}	11	3.33 to 3.35 {0.1311 to 0.1319}	57

Thickness (mm {in})	Identification mark	Thickness (mm {in})	Identification mark
2.89 to 2.91 {0.1138 to 0.1146}	42	3.35 to 3.37 {0.1319 to 0.1327}	27
2.91 to 2.93 {0.1146 to 0.1154}	43	3.37 to 3.39 {0.1327 to 0.1335}	58
2.93 to 2.95 {0.1154 to 0.1161}	13	3.39 to 3.41 {0.1335 to 0.1343}	59
2.95 to 2.97 {0.1161 to 0.1169}	44	3.41 to 3.43 {0.1343 to 0.1350}	29
2.97 to 2.99 {0.1169 to 0.1177}	45	3.43 to 3.45 {0.1350 to 0.1358}	60
2.99 to 3.01 {0.1177 to 0.1185}	15	3.45 to 3.47 {0.1358 to 0.1366}	61
3.01 to 3.03 {0.1185 to 0.1193}	46	3.47 to 3.49 {0.1366 to 0.1374}	31

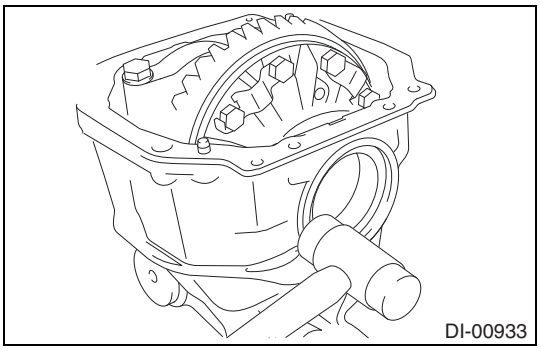
DI-00933

(4) Using a plastic hammer, lightly tap the differential carrier for better fitting of the case bearing and the side gear shaft washer.

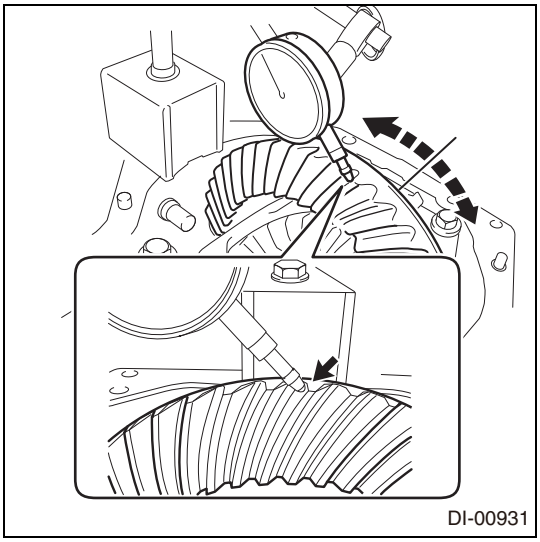
DI-00931

(5) Contact a dial gauge at a right angle to the tooth surface end of the ring gear.
(6) Secure the companion flange RR by hand, and inspect the backlash by moving the ring gear.
Standard value: 0.13 to 0.18mm {0.005 to 0.007in}

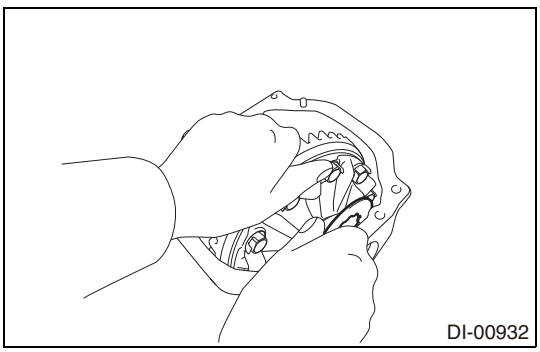
DI-00932

(7) If out of the standard, select the side gear shaft washer which allows the ring gear's backlash to be around the standard value, and install it to the back face side of the ring gear.

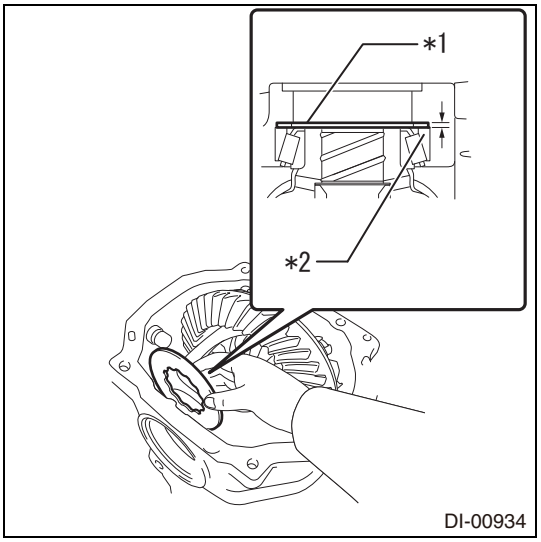

(8) Select the thickest side gear shaft washer that provides no gap or almost no gap between the end face of the case bearing outer race on the tooth face side of the ring gear and the carrier.

Captions in illustration

*1	Side gear shaft washer
*2	Outer race

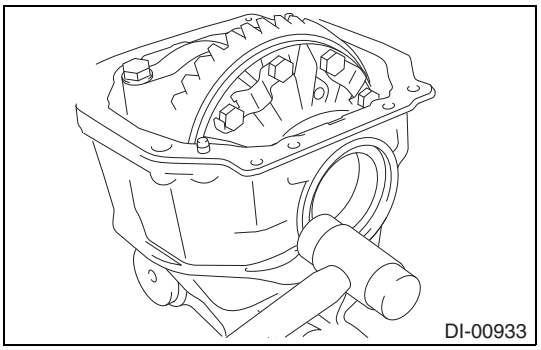

(9) Using a plastic hammer, lightly tap the differential carrier for better fitting of the case bearing.

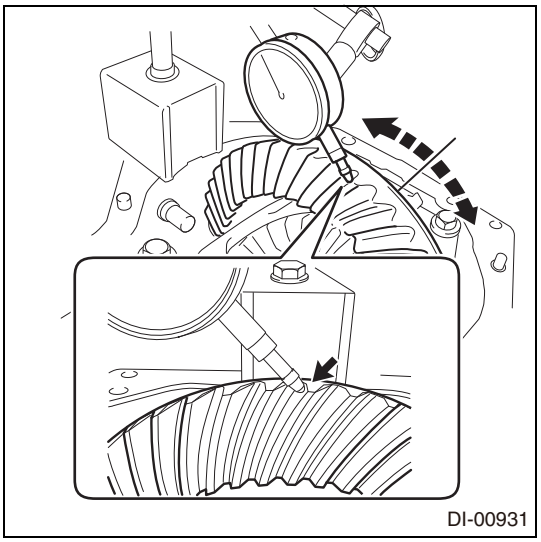

(10) Contact a dial gauge at a right angle to the tooth surface end of the ring gear.

(11) Secure the companion flange RR by hand, and inspect the backlash by moving the ring gear.
Standard value: 0.13 to 0.18mm {0.005 to 0.007in}

(12) If out of the standard, adjust the thickness of the right and left side gear shaft washers, increasing or decreasing by the same amount.
NOTE:
- Record the measured value for reference when selecting the side gear shaft washer.
- For reference when selecting the side gear shaft washer, inspect the tooth contact between the differential ring gear and the drive pinion.

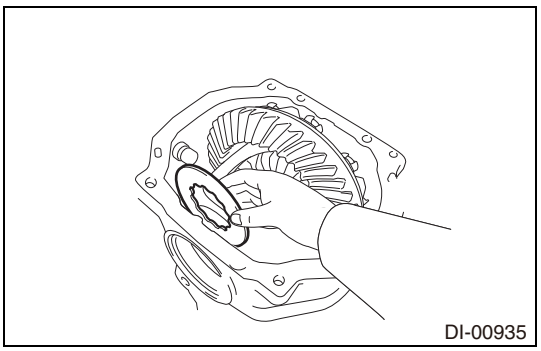

10. Inspection and adjustment of differential case bearing preload
(1) After adjusting the backlash of the ring gear, remove the side gear shaft washer on the tooth face side of the ring gear.
(2) Using a micrometer, inspect the thickness of the side gear shaft washer.
(3) Select the side gear shaft washer that is 0.06 to 0.09 mm {0.002 to 0.004 in} thicker than the removed side gear shaft washer.
CAUTION:
Install the side gear shaft washer that can be inserted into about two thirds of the way using a finger.

AD

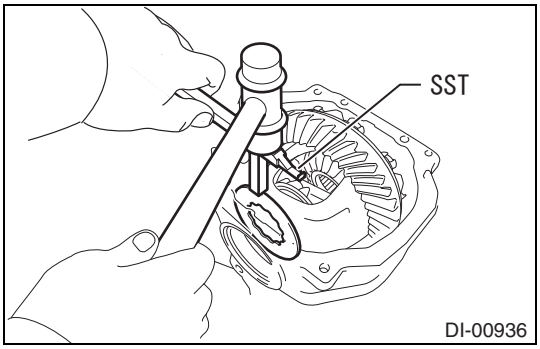

(4) Using the SST and a hammer, press-fit the side gear shaft washers into the differential carrier.
SST 09504-22012

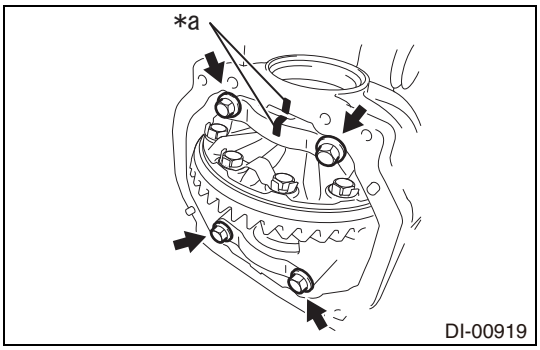

(5) Align the alignment marks on the bearing cap and the differential carrier, and install the bearing cap.

Captions in illustration

*a	Identification mark

(6) Using 4 bolts, tighten the right and left bearing caps.
Standard value:T=85N·m {867kgf·cm} {62.7ft·lbf}
CAUTION:
The bearing cap and the carrier are manufactured as a unit; do not change the combination.

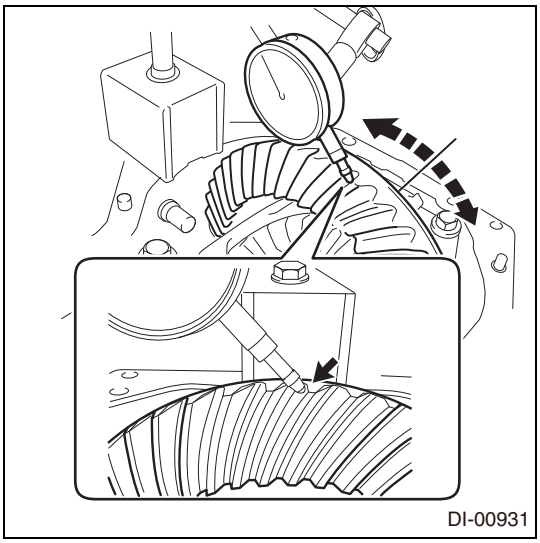

(7) Contact a dial gauge at a right angle to the tooth surface end of the ring gear.
(8) Secure the companion flange RR by hand, and inspect the backlash by moving the ring gear.
Standard value: 0.13 to 0.18mm {0.005 to 0.007in}
NOTE:
- Measure at 3 points or more on the ring gear circumference.
- If any small backlash is found, replace the side gear shaft washer on the tooth face side of the ring gear with a thicker one.
- Record the measured value for reference when selecting the side gear shaft washer.
- For reference when selecting the side gear shaft washer, inspect the tooth contact between the differential ring gear and the drive pinion.
- When adjusting the backlash, bring the average value close to 0.1 mm {0.004 in}.

11. Inspection and adjustment of overall preload
(1) Using a socket wrench (30 mm) and a torque wrench, check overall preload with the drive pinion contacting the ring gear tooth surface.

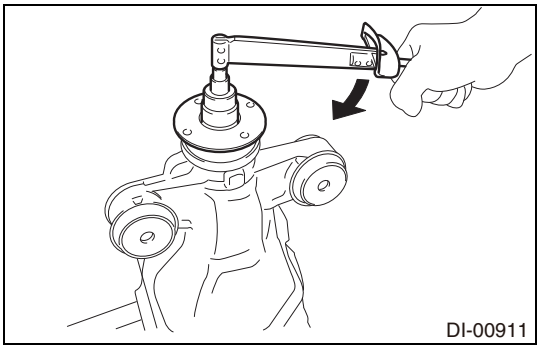

Preload for new drive pinion tapered roller bearing

Standard value	When the differential case bearing is new	T = 2.17 to 2.77 N·m {22.1 to 28.2 kgf·cm} {1.60 to 2.04 ft·lbf}
	When the differential case bearing is reused	T = 2.09 to 2.67N·m {21.3 to 27.2 kgf·cm} {1.54 to 1.97ft·lbf}

AD

Preload with reused drive pinion tapered roller bearing

Standard value	When the differential case bearing is new	T = 2.17 to 2.70N·m {22.1 to 27.5 kgf·cm} {1.60 to 1.99 ft·lbf}
	When the differential case bearing is reused	T = 2.09 to 2.60N·m {21.3 to 26.5 kgf·cm} {1.54 to 1.92ft·lbf}

NOTE:
- If out of the standard, perform the adjustment using the side gear shaft washer on the tooth face side of the ring gear.
- If the measured preload is less than standard, replace the side gear shaft washer with a thicker one.
- If the measured preload is more than standard, replace the side gear shaft washer with a thinner one.
- Record the measured value for reference when reassembling.

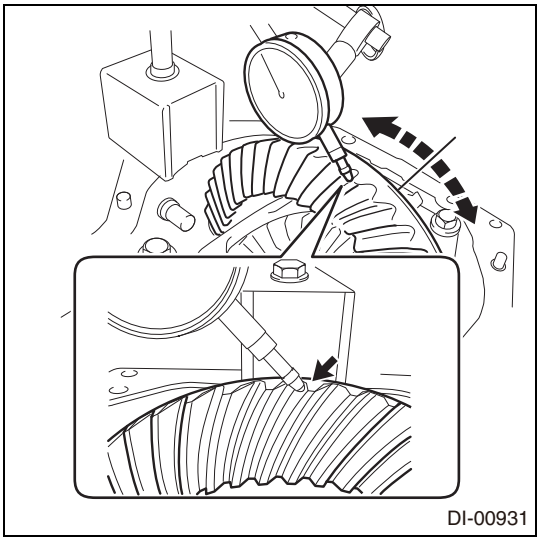
DI-00931

(2) Contact a dial gauge at a right angle to the tooth surface end of the ring gear.
(3) Secure the companion flange RR by hand, and inspect the backlash by moving the ring gear.
Standard value: 0.13 to 0.18mm {0.005 to 0.007in}
NOTE:
- Measure at 3 points or more on the ring gear circumference.
- If the backlash is out of the standard, adjust the thickness of the right and left side gear shaft washers, increasing or decreasing by the same amount.
- When adjusting the backlash, bring the average value close to 0.1 mm {0.004 in}.
- If any small backlash is found, replace the side gear shaft washer on the tooth face side of the ring gear with a thicker one.
- Record the measured value for reference when selecting the side gear shaft washer.
- For reference when selecting the side gear shaft washer, inspect the tooth contact between the differential ring gear and the drive pinion.

(4) Recheck the overall preload.

12. Inspection of tooth contact between differential ring gear and differential drive pinion
(1) Apply a thin uniform coat of red lead on both teeth surfaces of the ring gear.
(2) Rotate the companion flange forward and backward several times.
(3) Check the tooth contact between the drive pinion and the ring gear.

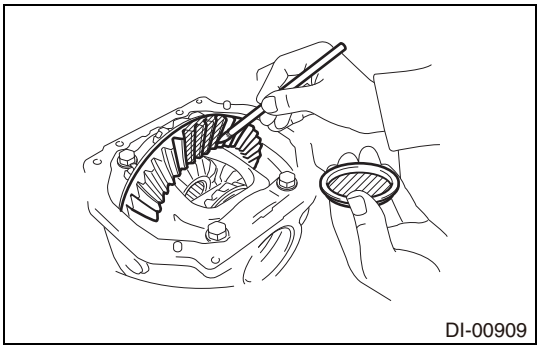
DI-00909

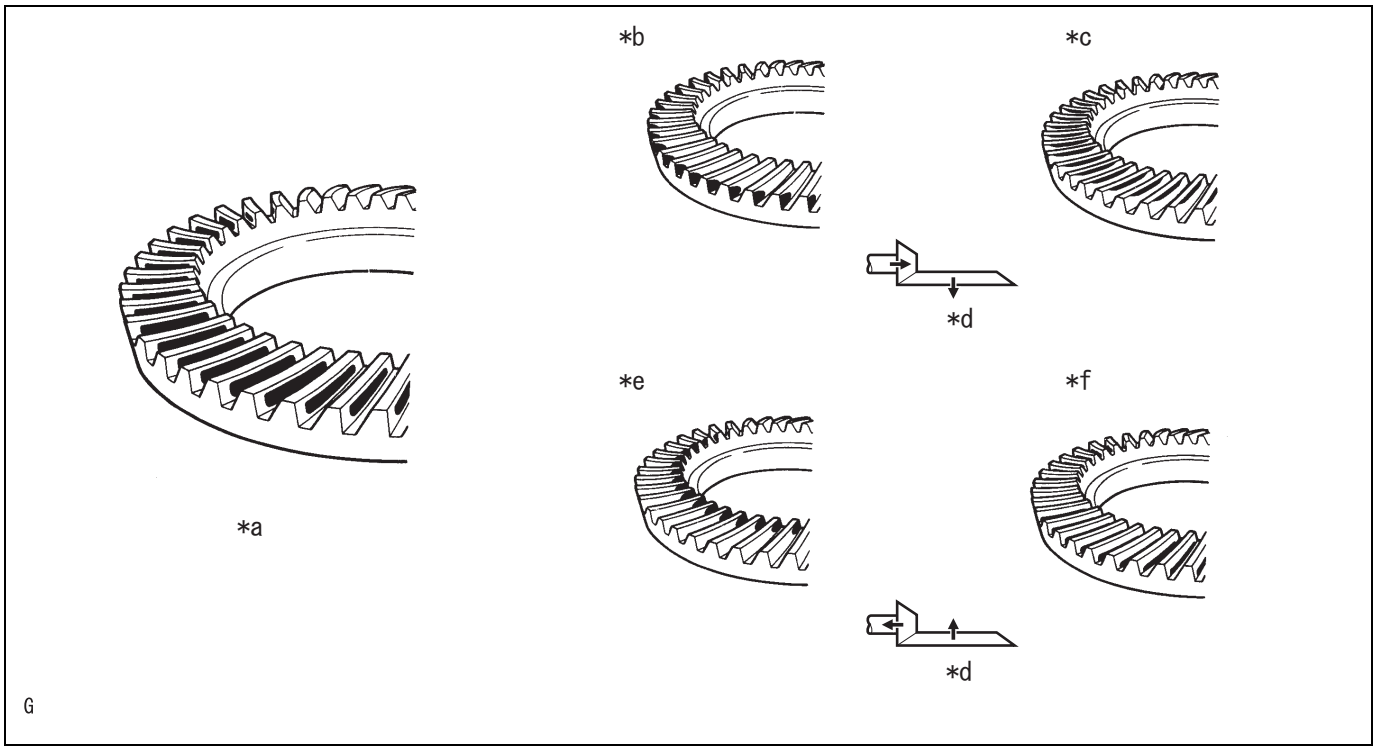

Captions in illustration

*a	Correct tooth contact	*b	Heel contact
*c	Face contact	*d	Adjust the drive pinion and the ring gear in the direction of arrow.
*e	Toe contact	*f	Flank contact

NOTE:
- Check the contact condition at 4 points on the ring gear circumference.
- The pattern shown on red lead is the position of tooth contact.

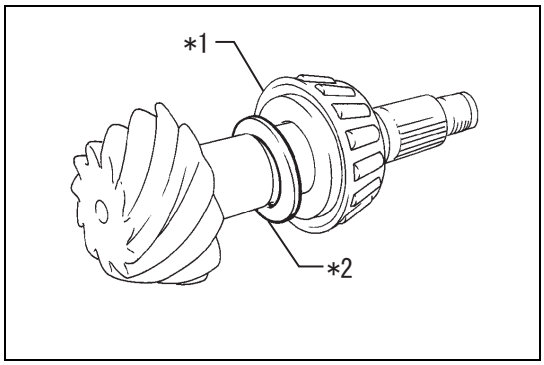

(4) If an improper tooth contact occurs, select a drive pinion washer from the table, remove the tapered roller bearing RR, and then reinstall it.

Captions in illustration

*1	Inner race
*2	Drive pinion washer

CAUTION:
If the thickness of the drive pinion washer is changed, adjust the backlash and perform the general preload inspection.

Type of rear differential drive pinion washer

Thickness (mm {in})	Thickness (mm {in})
1.69 to 1.71 {0.0665 to 0.0673}	2.02 to 2.04 {0.0795 to 0.0803}
1.72 to 1.74 {0.0677 to 0.0685}	2.05 to 2.07 {0.0807 to 0.0815}
1.75 to 1.77 {0.0689 to 0.0697}	2.08 to 2.10 {0.0819 to 0.0827}
1.78 to 1.80 {0.0701 to 0.0709}	2.11 to 2.13 {0.0831 to 0.0839}
1.81 to 1.83 {0.0713 to 0.0720}	2.14 to 2.16 {0.0843 to 0.0850}
1.84 to 1.86 {0.0724 to 0.0732}	2.17 to 2.19 {0.0854 to 0.0862}
1.87 to 1.89 {0.0736 to 0.0744}	2.20 to 2.22 {0.0866 to 0.0874}
1.90 to 1.92 {0.0748 to 0.0756}	2.23 to 2.25 {0.0878 to 0.0886}
1.93 to 1.95 {0.0760 to 0.0768}	2.26 to 2.28 {0.0890 to 0.0898}
1.96 to 1.98 {0.0772 to 0.0780}	2.29 to 2.31 {0.0902 to 0.0909}
1.99 to 2.01 {0.0783 to 0.0791}	2.32 to 2.34 {0.0913 to 0.0921}

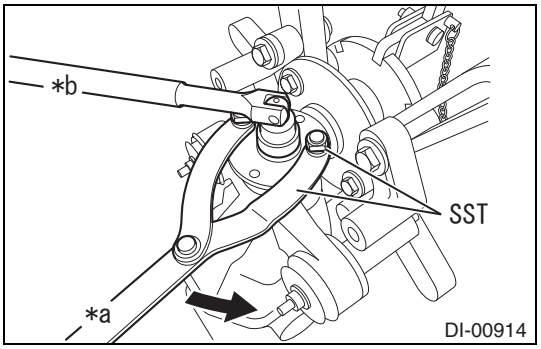

13. Removal of rear drive pinion nut
    (1) Using the SST, secure the flange and remove the drive pinion nut from the differential carrier.
    SST 18355AA000, 18334AA000

Captions in illustration

*a	Drive
*b	Hold

WARNING:
During operation, support the overhaul stand.
NOTE:
The bolts and nuts used for securing the SST and the companion flange RR are recommended to be M8 ×P1.25 with a bolt length of approx. 45 mm {1.8 in}.

14. Removal of rear drive pinion companion flange RR (Refer to AD - 41)
15. Removal of rear differential drive pinion oil slinger (Refer to AD - 42)
16. Removal of rear drive pinion tapered roller bearing FR (Refer to AD - 42)

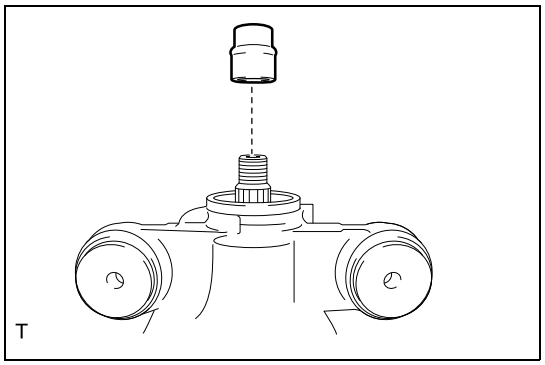

17. Installation of rear differential drive pinion bearing spacer
    (1) Install a new bearing spacer to the drive pinion.
    CAUTION:
    Install the part with a larger inner diameter to the drive pinion side, and the part with a smaller to the companion flange RR side.

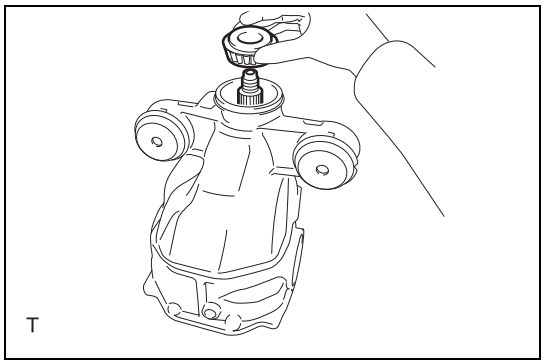

18. Installation of rear drive pinion tapered roller bearing FR
    (1) Install the tapered roller bearing FR (inner race) to the differential carrier.

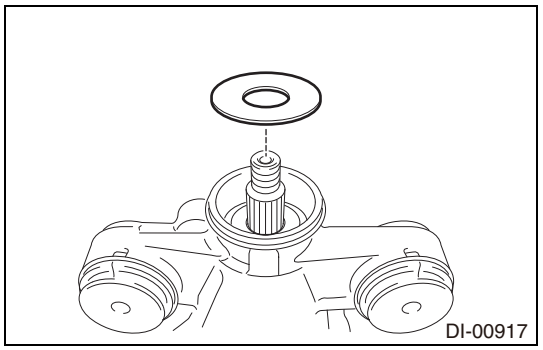

19. Installation of rear differential drive pinion oil slinger
    (1) Install the oil slinger to the differential carrier.

AD

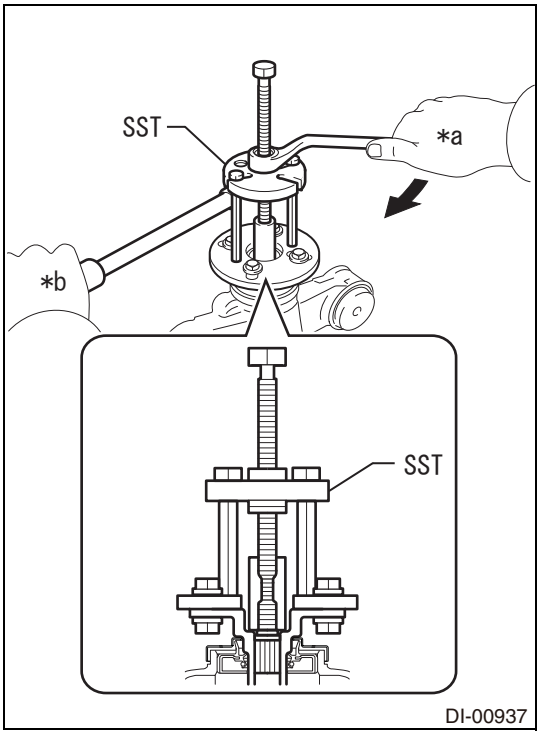

20. Installation of rear drive pinion companion flange RR
    (1) Using the SST and the companion flange RR, press-fit the tapered roller bearing RR (inner race) into the differential carrier.
    SST 09950-30012 (09951-03010, 09953-03010, 09954-03010, 09955-03030, 09956-03030)

Captions in illustration

*a	Drive
*b	Hold

NOTE:
- Apply grease to the thread and end portions of the SST center bolt (09953-03010) before using it.
- The bolts and nuts used for securing the SST and the companion flange RR are recommended to be M8 ×P1.25 with a bolt length of approx. 40 mm {1.6 in}.

21. Removal of rear drive pinion companion flange RR (Refer to AD - 41)
22. Installation of rear differential carrier oil seal (Refer to AD - 28)

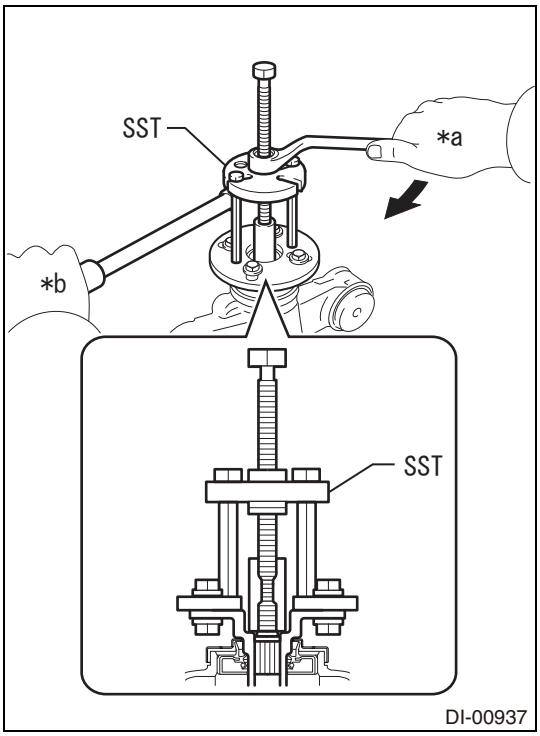

23. Installation of rear drive pinion companion flange RR
    (1) Using the SST, install the companion flange RR to the differential carrier.
    SST 09950-30012 (09951-03010, 09953-03010, 09954-03010, 09955-03030, 09956-03030)

Captions in illustration

*a	Drive
*b	Hold

NOTE:
- Apply grease to the thread and end portions of the SST center bolt (09953-03010) before using it.
- The bolts and nuts used for securing the SST and the companion flange RR are recommended to be M8 ×P1.25 with a bolt length of approx. 40 mm {1.6 in}.

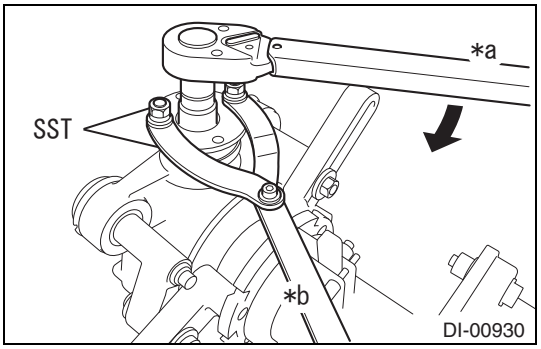

(2) Using the SST, secure the companion flange RR.
SST 18355AA000, 18334AA000

Captions in illustration

*a	Drive
*b	Hold

(3) Using a socket wrench (30 mm) and a torque wrench, tighten the drive pinion nut while checking the preload.
Limit: T = 338 N·m {3447 kgf·cm} {249.3 ft·lbf}
WARNING:
During operation, support the overhaul stand.
CAUTION:
Do not tighten excessively, or the thread portion may be damaged if it exceeds the limit.
NOTE:
- Tighten to approx. 100 N·m {1020 kgf·cm} {73.8 ft·lbf} while checking the preload.
- Apply differential gear oil to the thread portions of the nut and the drive pinion.

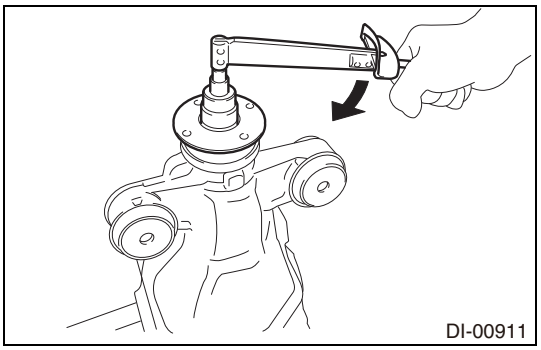

24. Adjustment of differential drive pinion preload
(1) Using a socket wrench (30 mm) and a torque wrench, check preload within the backlash of the drive pinion and ring gear.

Standard value	When the bearing is new	T = 1.87 to 2.24N·m {19.1 to 22.8 kgf·cm} {1.38 to 1.65ft·lbf}
	When the bearing is reused	T = 1.87 to 2.17 N·m {19.1 to 22.1 kgf·cm} {1.38 to 1.60ft·lbf}

NOTE:
- In order to seat the bearing properly, rotate the companion flange forward and backward several times.
- For inspection of general preload, record the preload of the drive pinion.

(2) Replace the bearing spacer if preload is excessive.
CAUTION:
The bearing spacer is used in plastic deformation, therefore, always replace it with a new part if excessively high preload is set to the drive pinion by mistake.
(3) If the preload is insufficient, check the preload after further tightening the drive pinion nut by 5 to 10°, and repeat the adjustment to be within the standard.
Limit: T = 338 N·m {3447 kgf·cm} {249.3 ft·lbf}
(4) If the preload is still insufficient after the tightening torque of the drive pinion nut exceeds the limit, loosen the drive pinion nut, and then check that the drive pinion nut and drive pinion thread are not and broken.
(5) If there is no malfunction, replace the bearing spacer, apply differential gear oil to the thread of the drive pinion, and repeat the operation.

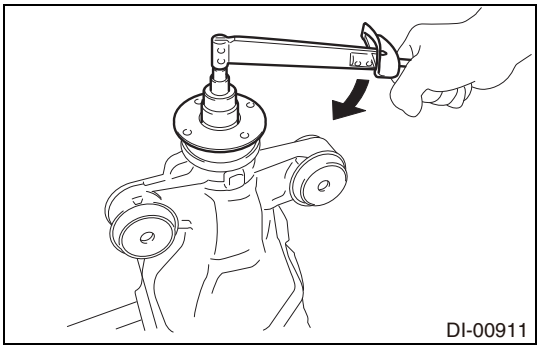

25. Inspection of overall preload
    (1) Using a socket wrench (30 mm) and a torque wrench, check preload with the drive pinion contacting the ring gear tooth surface.

Preload for new drive pinion tapered roller bearing

Standard value	When the differential case bearing is new	T = 2.27 to 2.87N·m {23.1 to 29.3 kgf·cm} {1.67 to 2.12ft·lbf}
	When the differential case bearing is reused	T = 2.19 to 2.77 N·m {22.3 to 28.2 kgf·cm} {1.62 to 2.04 ft·lbf}

Preload with reused drive pinion tapered roller bearing

Standard value	When the differential case bearing is new	T = 2.27 to 2.80N·m {23.1 to 28.6 kgf·cm} {1.67 to 2.07ft·lbf}
	When the differential case bearing is reused	T = 2.19 to 2.70N·m {22.3 to 27.5 kgf·cm} {1.62 to 1.99ft·lbf}

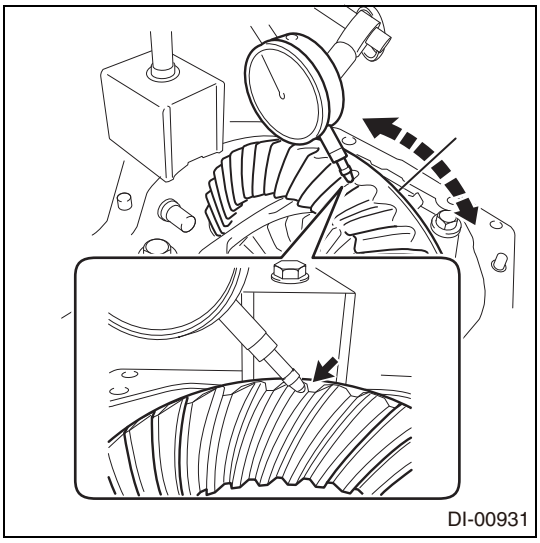

26. Inspection of backlash between differential ring gear and differential drive pinion
    (1) Contact a dial gauge at a right angle to the tooth surface end of the ring gear.
    (2) Secure the companion flange RR by hand, and inspect the ring gear backlash.
    Standard value: 0.13 to 0.18mm {0.005 to 0.007in}
    NOTE:
    Measure at 3 points or more on the ring gear circumference.

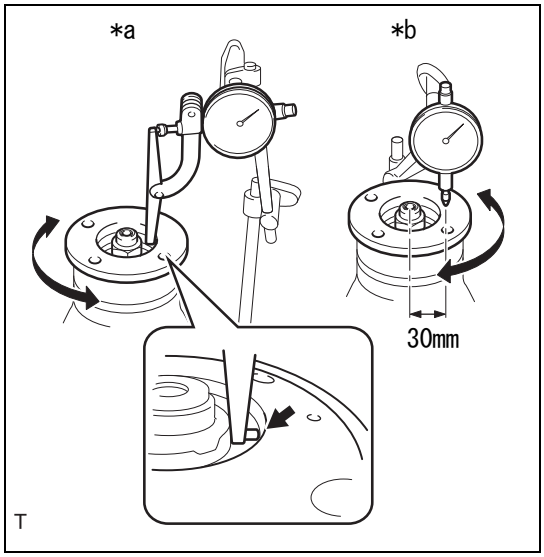

27. Inspection of rear drive pinion companion flange RR runout
    (1) Wipe off the inner surface of the companion flange RR with a cloth to remove dust or foreign matter.

Captions in illustration

*a	Inspection of radial runout
*b	Inspection of lateral runout

    (2) Inspection of companion flange RR radial runout
        (a)Contact the lever type probe of a dial gauge at a right angle to the inner circumference of the companion flange RR.
        (b)Inspect radial runout of the companion flange RR.
        Limit: 0.09mm {0.004in}
    (3) Inspection of companion flange RR lateral runout
        (a)Contact a dial gauge at a right angle to the surface of the companion flange RR as shown in the figure.
        (b)Inspect lateral runout of the companion flange RR.
        Limit: 0.09mm {0.004in}

AD

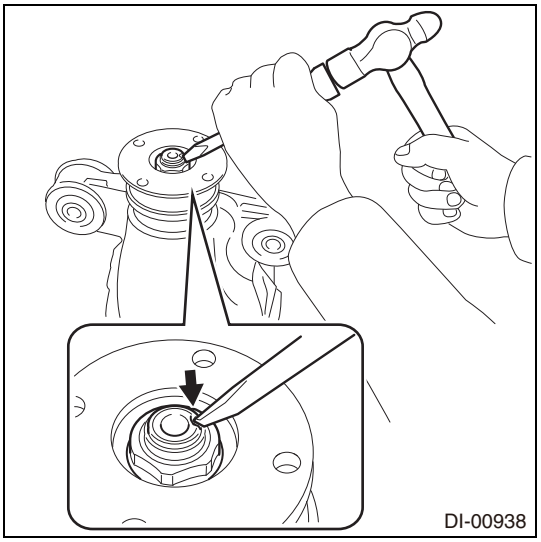

28. Fixation of rear drive pinion nut
    (1) Crimp the drive pinion nut using a chisel and a hammer.
29. Installation of rear differential side gear shaft oil seal (Refer to AD - 31)
30. Installation of rear differential drain plug
    (1) Install the drain plug to the differential carrier through a new gasket using a socket hexagon wrench 10.
    Standard value:T=49N·m {500kgf·cm} {36.1ft·lbf}
31. Installation of rear differential breather plug oil deflector
    (1) Using a scraper and a wire brush, clean the seal gasket that is attached to the differential carrier and the carrier cover, and then degrease it with a cleaning solvent, etc.
    CAUTION:
    Be careful not to damage the mating surface of the differential carrier.

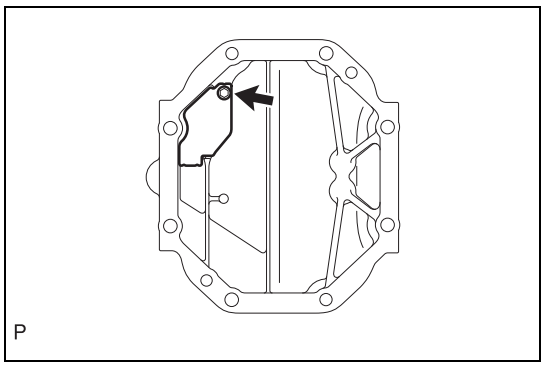

    (2) Using bolts, install the breather plug oil deflector to the differential carrier cover.
    Standard value:T=8.0N·m {82kgf·cm} {5.9ft·lbf}

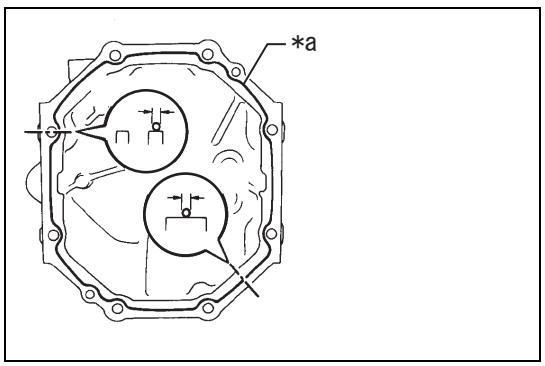

32. Installation of rear differential carrier cover
    (1) Apply Three Bond 1281 or equivalent to the position of the differential carrier cover as shown in the figure.

Captions in illustration

*a	Applying position of Three Bond 1281 or equivalent

CAUTION:
- Apply seal gasket in a diameter of 2 to 3 mm {0.08 to 0.12 in} seamlessly.
- There must be 10 mm {0.4 in} or more overlapped portion between the starting and ending sections.
- Install within 3 minutes after applying seal gasket.

AD

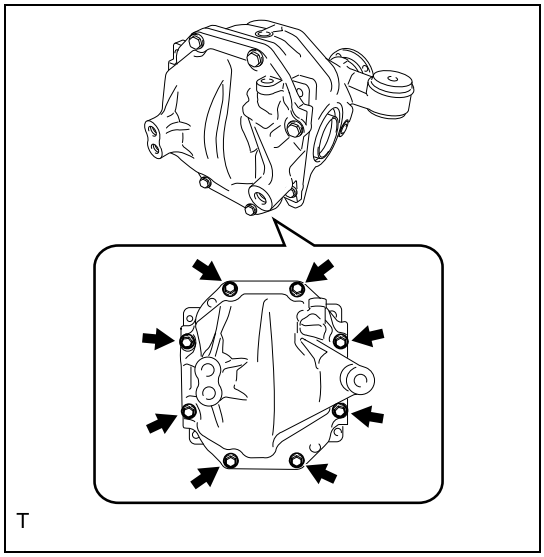

(2) Install the differential carrier cover to the differential carrier with 8 bolts.
Standard value:T=47N·m {479kgf·cm} {34.7 ft·lbf}
CAUTION:
Do not fill with oil or drive the vehicle immediately after installing the differential carrier cover. Leave the vehicle unattended for one hour or more. Also, avoid abrupt acceleration and deceleration for 12 hours or more.

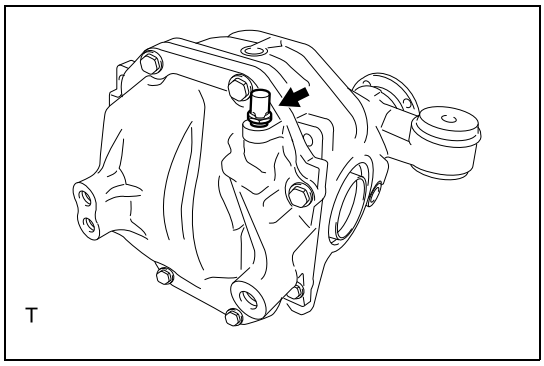

33. Installation of rear differential breather plug
(1) Install the differential breather plug to the differential carrier.
Standard value:T=21N·m {214kgf·cm} {15.5ft·lbf}

34. Removal of rear differential carrier ASSY RR
(1) Remove the rear differential carrier ASSY RR from the overhaul stand.

Installation

1. Installation of differential carrier ASSY RR
(1) Using a tall transmission jack, support the differential carrier ASSY RR.
(2) Install a new snap ring to the rear drive shaft ASSY.
(3) Apply differential gear oil to the spline of the inboard joint ASSY.
(4) Align the spline of the rear drive shaft inboard joint, and then press-fit the rear drive shaft ASSY using a brass bar and a hammer.

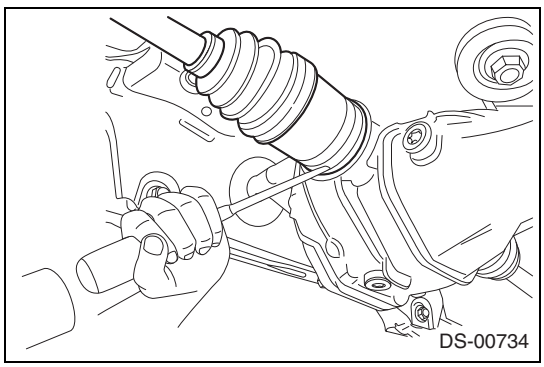

CAUTION:
- Place the snap ring with its cut end facing downward.
- Do not damage the oil seal during insertion.
- Be careful not to strike the tip of the outboard joint with a hammer.
- If there is a malfunction, such as dislocation, etc., in the inboard joint of the drive shaft, replace it with a new part.

NOTE:
Check that the drive shaft is completely press-fit by feeling the change of reaction force or sound quality.

AD

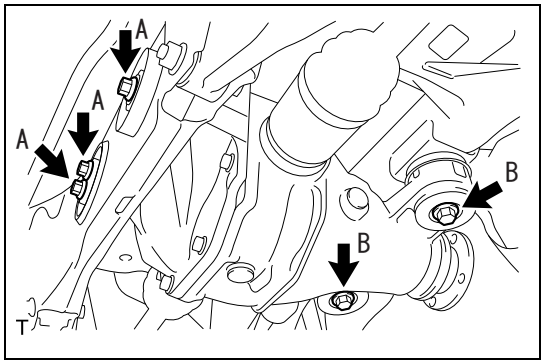

(5) Gradually lift the tall transmission jack, and install the differential carrier ASSY RR through the rear differential mount stopper UPR and the rear differential mount stopper LWR with 5 bolts
SST 41399CA170
CAUTION:
When tightening the bolt B, use the SST.
Standard value:T=62N·m {632kgf·cm} {45.7 ft·lbf} (bolt A)
T=95N·m {969kgf·cm} {70.1 ft·lbf} (bolt B)

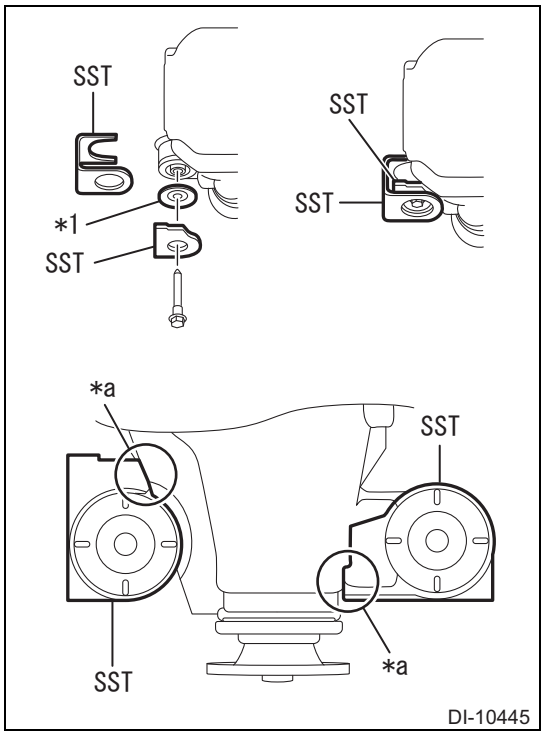

Captions in illustration

*1	Rear differential mount stopper LWR
*a	Apply the SST to the rear differential carrier.

AD

2. Installation of propeller shaft with center bearing ASSY (Refer to DP - 16)
3. Filling of differential oil (Refer to AD - 26)

Rear differential mount cushion

Exploded view

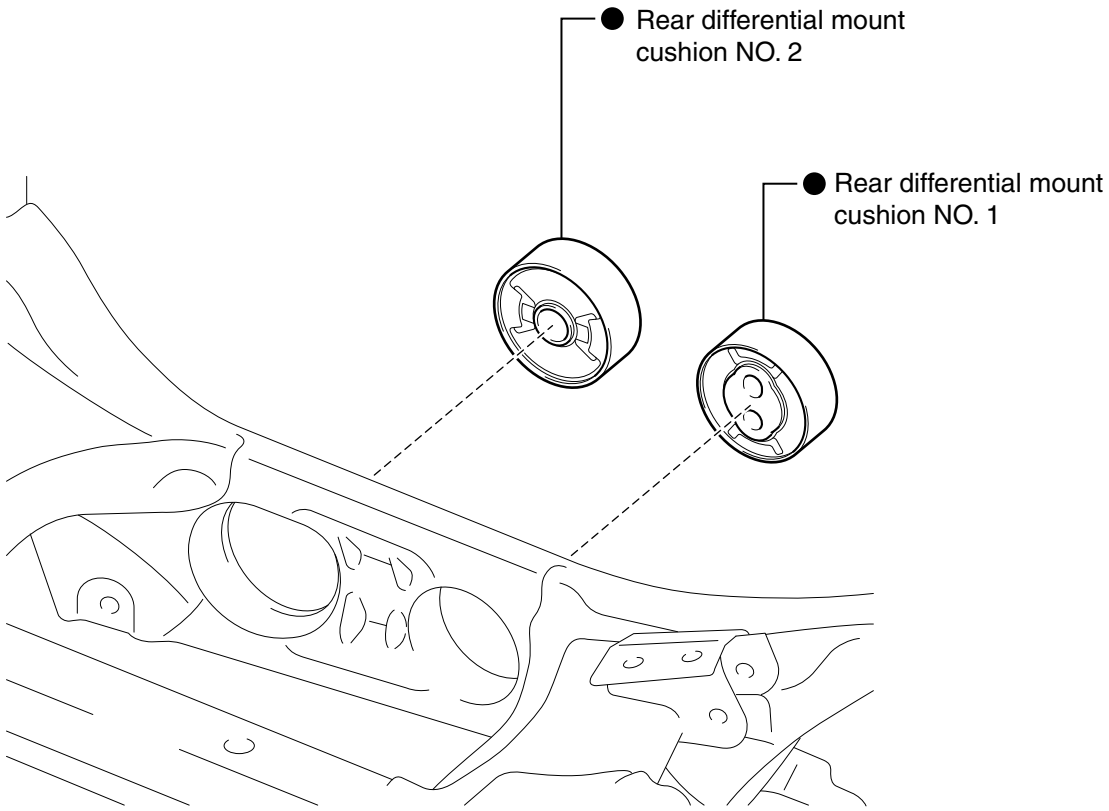

● Non-reusable parts

DI-00950

Removal

1. Removal of rear differential carrier ASSY (Refer to AD - 35)

2. Removal of exhaust tail pipe ASSY (Refer to IE - 39)
3. Removal of stabilizer bar RR (Refer to RP - 25)

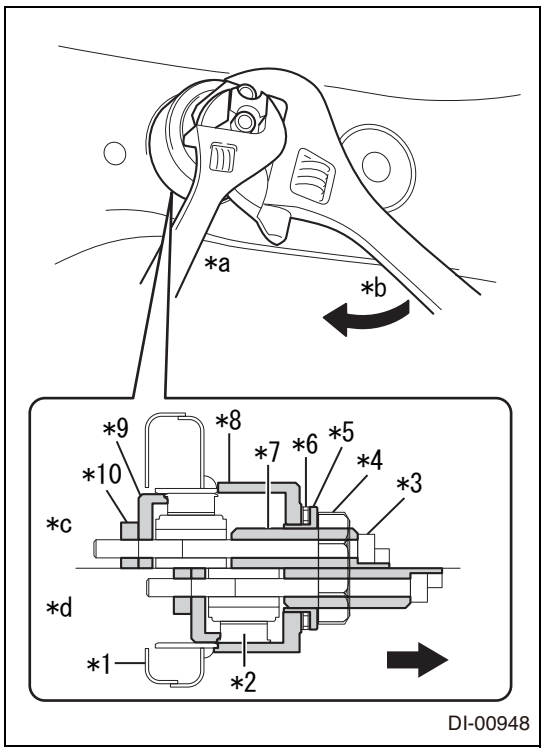

4. Removal of rear differential mount cushion NO. 1
   (1) Using the SST, remove the rear differential mount cushion NO. 1.
   SST 41399CA050 (41399CA060, 41399CA070, 41399CA100, 41399CA110, 41399CA120, 41399CA130, 41399CA140, 41399CA150)
   CAUTION:
   - Always make sure that the SST fits the periphery of the rear suspension member cylinder and is not tilted.
   - Do not allow the SST to ride on the weld beads on the cylinder's outer periphery.

Captions in illustration

*1	Rear suspension member
*2	Rear differential mount cushion NO. 1
*3	SST(41399CA140)
*4	SST(41399CA120)
*5	SST(41399CA100)
*6	SST(41399CA130)
*7	SST(41399CA150)
*8	SST(41399CA070)
*9	SST(41399CA060)
*10	SST(41399CA110)
*a	Hold
*b	Drive
*c	Start.
*d	Complete
➡	Rear side of vehicle

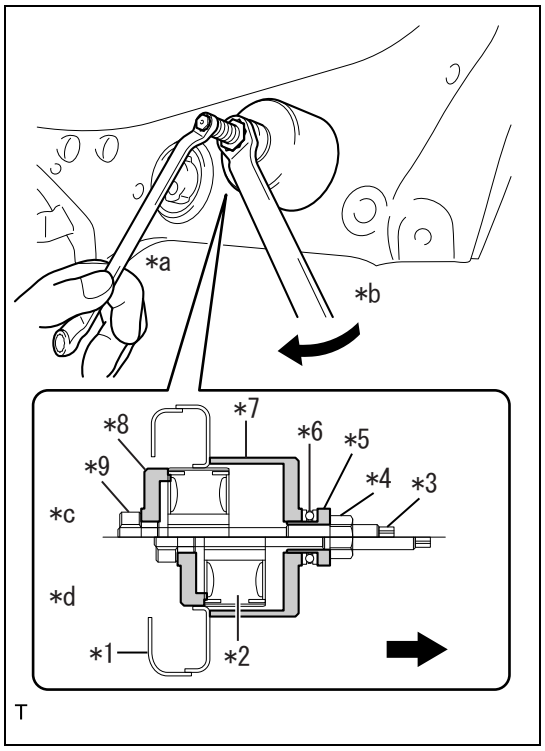

T

5. Removal of rear differential mount cushion NO. 2
   (1) Using the SST, remove the rear differential mount cushion NO. 2.
   SST 41399CA000 (41399CA010, 41399CA020, 41399FG050, 41399FG061, 41399FG070, 41399FG080, 41399FG091)

Captions in illustration

*1	Rear suspension member
*2	Rear differential mount cushion NO. 2
*3	SST(41399FG091)
*4	SST(41399FG070)
*5	SST(41399FG050)
*6	SST(41399FG080)
*7	SST(41399CA020)
*8	SST(41399CA010)
*9	SST(41399FG061)
*a	Hold
*b	Drive
*c	Start.
*d	Complete
➡	Rear side of vehicle

AD

Installation

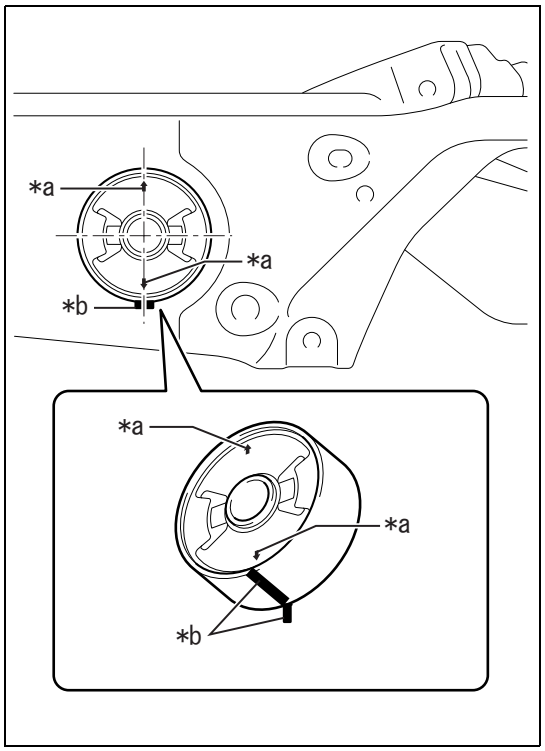

1. Installation of rear differential mount cushion NO. 2
   (1) Place alignment marks on the new rear differential mount cushion NO. 2 and the rear suspension member as shown in the figure.
   CAUTION:
   Install the rear differential mount cushion NO. 2 with the arrow marks facing upward and downward.
   NOTE:
   Before installation, place alignment marks on the rear suspension member and the rear differential mount cushion NO. 2.

Captions in illustration

*a	Arrow mark
*b	Alignment marks

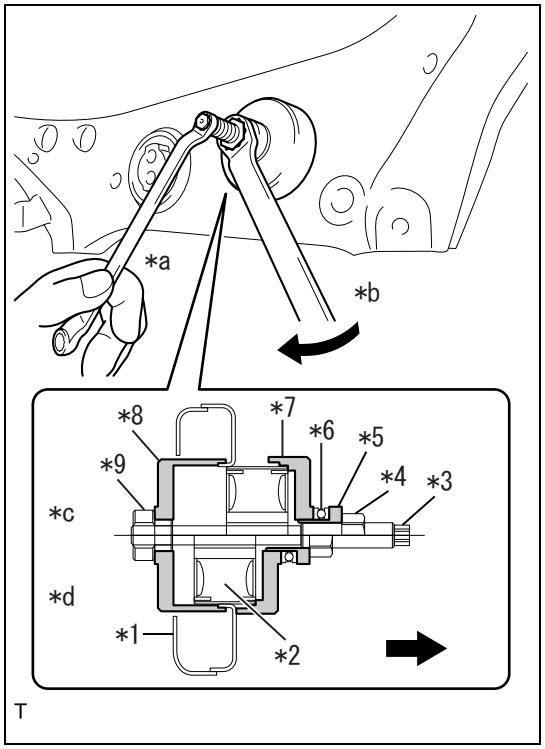

   (2) Using the SST, install the rear differential mount cushion NO. 2.
   SST 41399CA000 (41399CA030, 41399CA040, 41399FG050, 41399FG061, 41399FG070, 41399FG080, 41399FG091)

Captions in illustration

*1	Rear suspension member
*2	Rear differential mount cushion NO. 2
*3	SST(41399FG091)
*4	SST(41399FG070)
*5	SST(41399FG050)
*6	SST(41399FG080)
*7	SST(41399CA040)
*8	SST(41399CA030)
*9	SST(41399FG061)
*a	Hold
*b	Drive
*c	Start.
*d	Complete
➡	Rear side of vehicle

NOTE:
- Align the alignment marks on the rear differential mount cushion NO. 2 and the rear suspension member, and install it while checking how it is off-centered.
- The allowable range of the rear differential mount cushion NO. 2 installation angle should be within 5°.

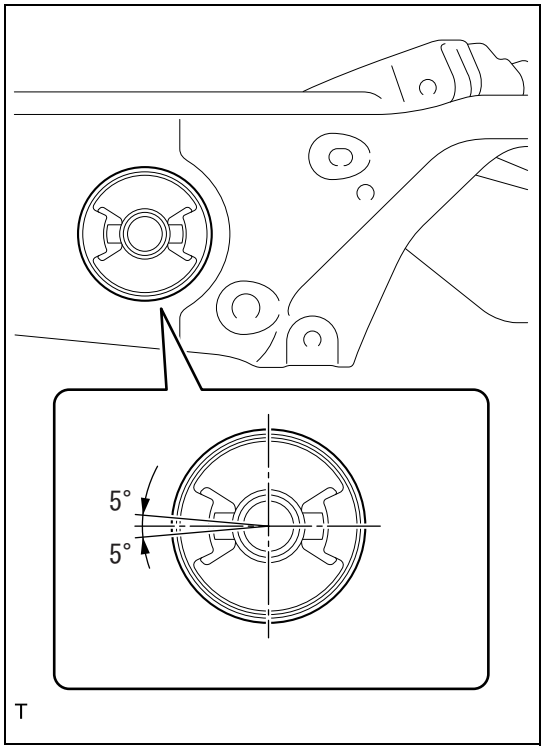

- Insert the rear differential mount cushion NO. 2 until *7 (SST) contacts the rear suspension member.

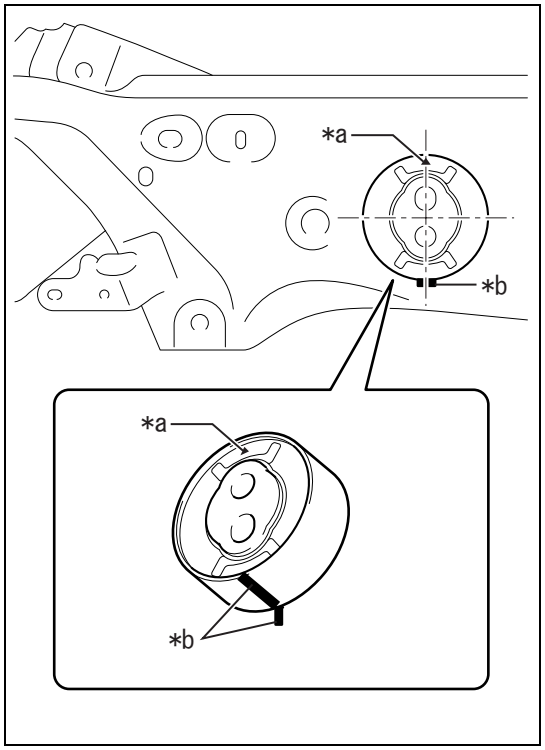

2. Installation of rear differential mount cushion NO. 1
   (1) Place alignment marks on the new rear differential mount cushion NO. 1 and the rear suspension member as shown in the figure.
   CAUTION:
   Install the rear differential mount cushion NO. 1 with the triangle mark facing upward.
   NOTE:
   Before installation, place alignment marks on the rear suspension member and the rear differential mount cushion NO. 1.

Captions in illustration

*a	Triangle mark
*b	Alignment marks

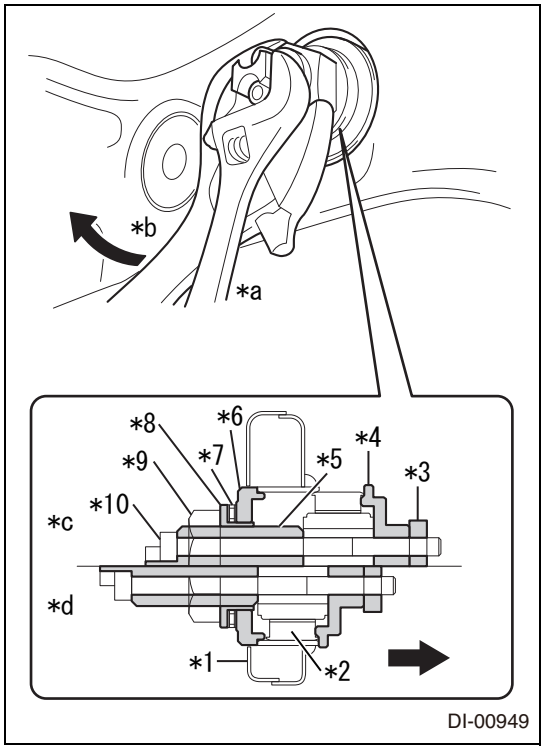

(2) Using the SST, install the rear differential mount cushion NO. 1.
SST 41399CA050 (41399CA080, 41399CA090, 41399CA100, 41399CA110, 41399CA120, 41399CA130, 41399CA140, 41399CA150)

Captions in illustration

*1	Rear suspension member
*2	Rear differential mount cushion NO. 1
*3	SST(41399CA110)
*4	SST(41399CA090)
*5	SST(41399CA150)
*6	SST(41399CA080)
*7	SST(41399CA130)
*8	SST(41399CA100)
*9	SST(41399CA120)
*10	SST(41399CA140)
*a	Hold
*b	Drive
*c	Start.
*d	Complete
➡	Rear side of vehicle

CAUTION:
- Perform installation while checking the SST and the rear differential mount cushion NO. 1 are not tilted.
- If the rear differential mount cushion NO. 1 is tilted, the operation becomes less efficient. When setting the rear differential mount cushion NO. 1 in the rear suspension member, make sure there are no gaps between the SST and the rear differential mount cushion NO. 1.

NOTE:
- Align the alignment marks on the rear differential mount cushion NO. 1 and the rear suspension member, and install it while checking how it is off-centered.
- The allowable range of the rear differential mount cushion NO. 1 installation angle should be within 3°.

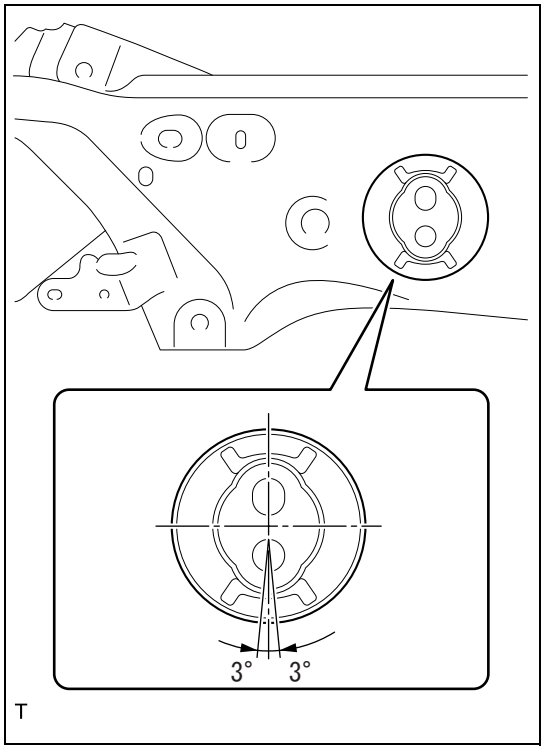

- Insert the rear differential mount cushion until *4 (SST) contacts the rear suspension member.

3. Installation of stabilizer bar RR (Refer to RP - 27)
4. Installation of exhaust tail pipe ASSY (Refer to IE - 44)
5. Installation of rear differential carrier ASSY (Refer to AD - 65)

Wheel alignment

Front wheel alignment
Adjustment AL-2
Rear wheel alignment
Adjustment AL-7

Front wheel alignment

Adjustment

CAUTION:

To ensure proper functioning of the brake system, be sure to perform the neutral position setting of the VDC sensor as initialization after alignment adjustment or removal ·replacement of suspension or underbody parts. (Refer to BC - 15)

1. Tire inspection (Refer to TW - 2)

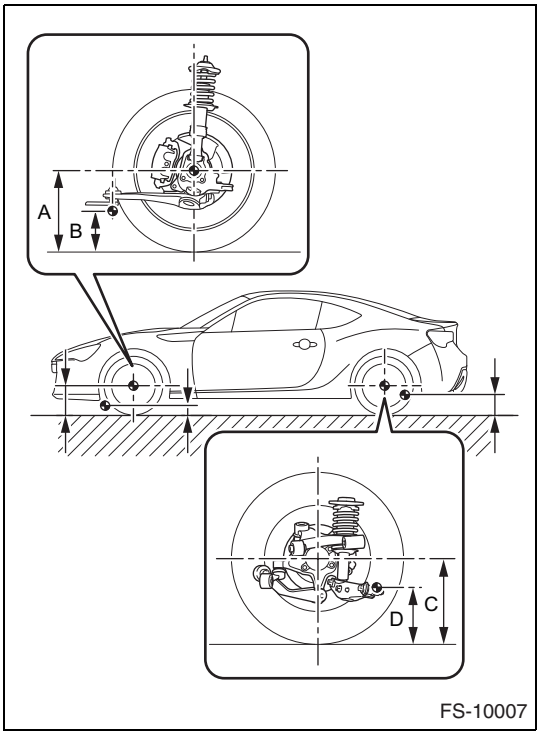

2. Vehicle height inspection
   (1) Perform vehicle height inspection after bouncing the vehicle at the corners by large amounts to stabilize the suspension.
   Standard value

Dimension A - Dimension B (mm {in})	Dimension C - Dimension D (mm {in})
146 {5.75}	110 {4.33}

   CAUTION:
   - Perform the inspection while the vehicle is at curb weight (with no spare tire and no service tool loaded).
   - These values are for adjusting the wheel alignment and do not indicate the actual vehicle height.

   NOTE:
   - Dimension A ···Center of the front wheel
   - Dimension B ···Center of the tip of the front arm ASSY front side bushing mounting bolt
   - Dimension C ···Center of the rear wheel
   - Dimension D ···Center of the rear end of the rear lower arm No. 2 bushing mounting bolt threaded portion

3. Inspection of camber, caster, and kingpin angle
   CAUTION:
   Perform the inspection while the vehicle is at curb weight (with the spare tire, jack, and service tools loaded and with a full fuel tank).
   (1) Place the front wheel on the turning radius gauge.

Standard value

AL

Tire size	Camber	Caster	Kingpin angle
215/45R17 215/40R18	0°00±0°45'	5°55' (Reference)	15°30' (Reference)

NOTE:
Make sure the ground contact surfaces of the front and rear wheels are at the same height.

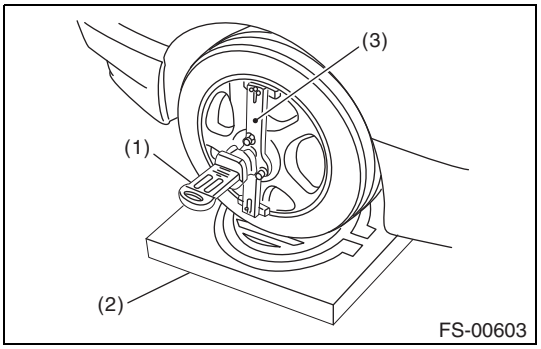

   (2) Set the adapter into the center of wheel, and then set the wheel alignment gauge.

Captions in illustration

(1)	Wheel alignment gauge
(2)	Turning radius gauge
(3)	Adapter

   (3) Measure the camber angle in accordance with the operation manual for wheel alignment gauge.
   (4) Check whether the measured value is within standard value.
   (5) Measure the caster angle in accordance with the operation manual for wheel alignment gauge.
   (6) Check whether the measured value is within standard value.

4. Camber adjustment
   CAUTION:
   Perform the inspection while the vehicle is at curb weight (with the spare tire, jack, and service tools loaded and with a full fuel tank).
   (1) Jack up the vehicle, and then remove the front tires.

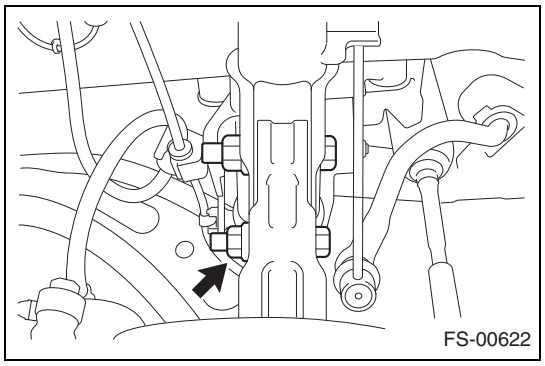

(2) Loosen the lower mounting bolt and nut of the shock absorber ASSY FR and knuckle.

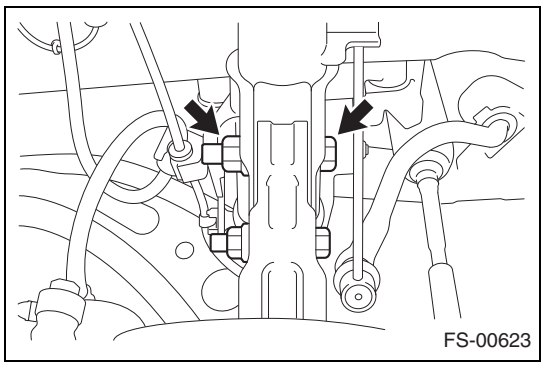

(3) Replace the upper mounting bolt of the shock absorber ASSY FR and knuckle with a replacement bolt. (Part No.: Flange bolt 14×60 (901000394))
CAUTION:
Insert the bolts from the rear of the vehicle.

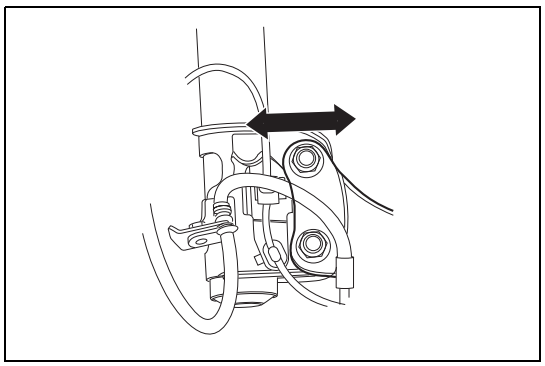

(4) Using the lower mounting bolt of the shock absorber ASSY FR and knuckle as a supporting point, adjust the camber with the play in the bolt, steering knuckle bolt hole, and shock absorber ASSY FR bolt hole.
CAUTION:
The limit of difference between the left and right camber values is 0° 30'.
NOTE:
The range adjustable by replacing the bolts is 0°±45'.

AL

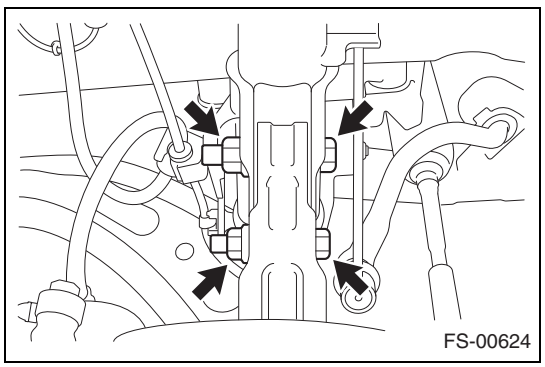

(5) Tighten the two bolts using two new nuts.
Standard value:T=155N·m {1581kgf·cm} {114.3ft·lbf}

(6) Install the front tires.
Standard value:T=120N·m {1224kgf·cm} {88.5ft·lbf}
(7) Lower and remove the jack, and bounce the vehicle several times to stabilize the front suspension.
(8) Check the camber again.
(9) Check the toe-in.

5. Side slip inspection
   (1) Check the side slip using a side slip tester.
   Standard value: 0±5 mm {0±0.197in} (per 1 m {3.28ft})
   CAUTION:
   - Enter onto the side slip tester in the straight ahead position at a speed equal to or less than the walking speed (approx. 4 km/h {2.5 MPH}), and perform the inspection while in neutral.
   - Do not depress the brake pedal on the side slip tester.
   - Do not turn the steering wheel on the side slip tester.

   (2) If it is out of standard value, check the wheel alignment.
6. Toe-in inspection
   (1) Bounce the vehicle to stabilize the suspension.
   (2) Move the vehicle straight 5 m {16.4 ft} forward by manually pushing it.
   CAUTION:
   If the vehicle has been moved backward, be sure to move it forward by the same distance.

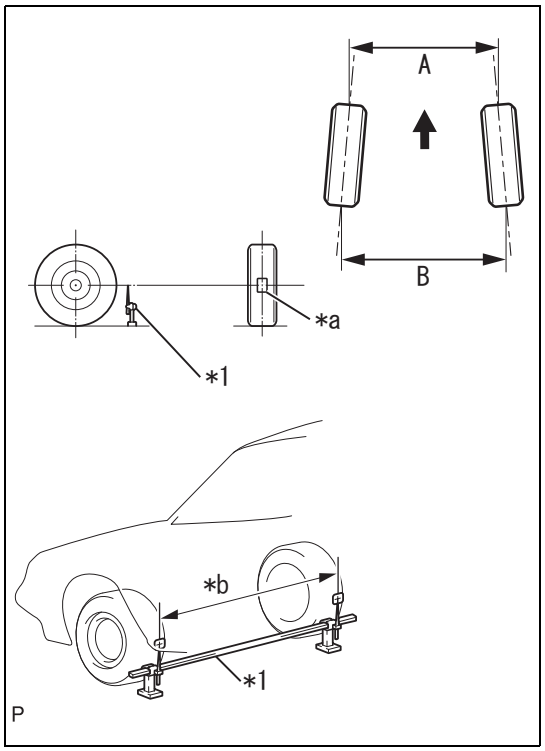

   (3) Adjust the height of the toe-in gauge pointer so that it is at the same height as the center of the front wheel axis, and set it behind the tire.

Captions in illustration

*1	Toe-in gauge
*a	Tread center
*b	Dimension B
➡	Front of vehicle

   (4) Place a tread center mark on the back of both front tires, and measure the distance between the marks (dimension B).
   (5) Move the vehicle forward by pushing it slowly to rotate the front wheels 180°.
   CAUTION:
   Be sure not to rotate more than 180°, and if the wheels have been over-rotated, repeat from the setting up of the toe-in gauge.

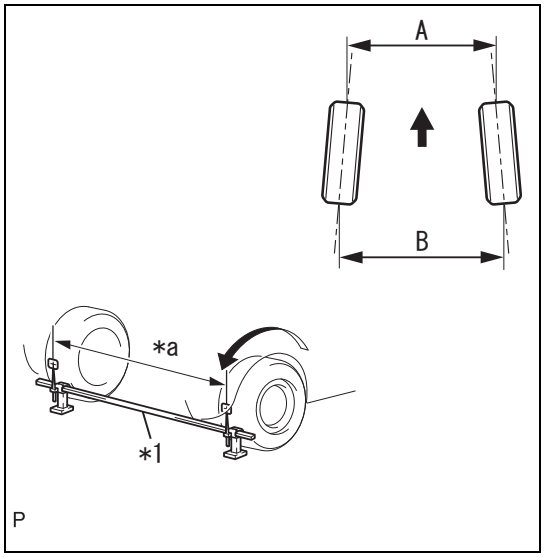

(6) Measure the distance between the marks at the front of the vehicle (dimension A).

Captions in illustration

*1	Toe-in gauge
*a	Dimension A
➡	Front of vehicle

(7) Calculate the toe-in.

Standard value

Toe-in (mm {in})
0±3 {0±0.12} (at curb weight)

NOTE:

Toe-in = Dimension B - Dimension A

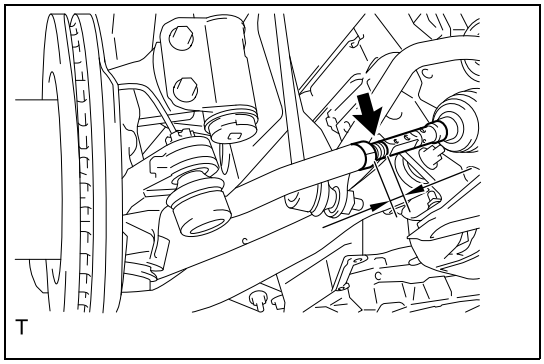

7. Toe-in adjustment
   (1) Measure the length of the threaded portion of the left and right tie-rods.
   Criteria: Difference between left and right is 2.0 mm {0.079 in} or less
   (2) Remove the rack boot clips.
   (3) Loosen the tie-rod end lock nuts.
   (4) If the difference between the threaded portion of the left and right tie-rods is out of standard value, adjust them.
   (a) If the measured toe-in deviates toward the outer side, extend the shorter tie-rod.
   (b) If the measured toe-in deviates toward the inner side, shorten the longer tie-rod.
   (c) Check the toe-in again.
   (5) Turn the left tie-rod to right and turn the right tie-rod to left by an equal amount to adjust the toe-in so that it is within standard value.

Standard value

Toe-in (mm {in})
0±2 {0±0.08}

   (6) Tighten the tie-rod end lock nuts.
   Standard value: T=85N·m {867kgf·cm} {62.7ft·lbf}
   CAUTION:
   Temporarily tighten the lock nut while holding the hexagonal part of the tie-rod so that the lock nut and the steering rack end do not turn together, and then tighten the lock nut while holding the width across flat of the tie-rod end.
   (7) Install the clips on the rack boots.
   CAUTION:
   Make sure that there is no abnormal protrusion or dent on the boot and that it is installed correctly.

AL

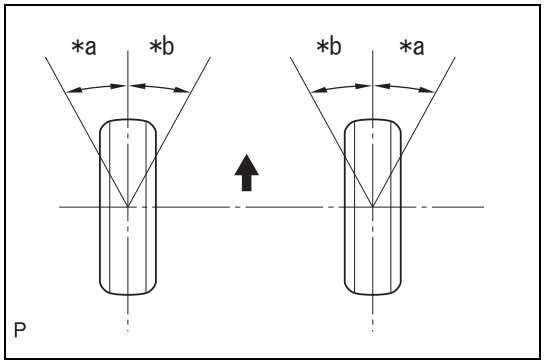

8. Wheel turning angle inspection
   (1) Set the turning radius gauge.
   (2) Check the wheel turning angle.

Standard value

Inside	Outside
36°54' (Reference)	31°12' (Reference)

CAUTION:
- Perform the inspection while the vehicle is at curb weight (with the spare tire, jack, and service tools loaded and with a full fuel tank).
- While the vehicle is at curb weight, apply the foot brake using a brake pedal depressor, etc. to prevent the front wheels from rotating during the inspection.
- Remove the stop light fuse to prevent the stop light from illuminating during the inspection.

Captions in illustration

*a	Inside
*b	Outside
➡	Front

9. Confirmation of front tires in the straight-ahead position
10. VDC sensor mid point setting (Refer to BC - 15)

Rear wheel alignment

Adjustment

CAUTION:

To ensure proper functioning of the brake system, be sure to perform the neutral position setting of the VDC sensor as initialization after alignment adjustment or removal ·replacement of suspension or underbody parts. (Refer to BC - 15)

1. Tire inspection (Refer to TW - 2)
2. Vehicle height inspection (Refer to AL - 2)
3. Side slip inspection
   (1) Check the side slip using a side slip tester.
   Standard value: 0±5 mm {0±0.20in} (per 1 m {3.3ft})
   CAUTION:
   - Enter onto the side slip tester in the straight ahead position at a speed equal to or less than the walking speed (4 km/h {2.5 MPH}), and perform the inspection while in neutral.
   - Do not depress the brake pedal on the tester.
   - Do not turn the steering wheel on the tester.

   (2) If it is out of standard value, check the wheel alignment.
4. Toe-in inspection
   (1) Bounce the vehicle to stabilize it.
   (2) Move the vehicle straight 5 m {16.4 ft} forward by manually pushing it.
   CAUTION:
   If the vehicle has been moved backward, be sure to move it forward by the same distance.

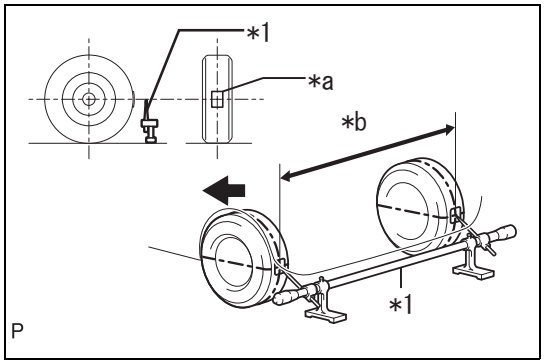

(3) Adjust the height of the toe-in gauge pointer so that it is at the same height as the center of the rear wheel axis, and set it behind the tire.

Captions in illustration

*1	Toe-in gauge
*a	Tread center
*b	Dimension B
➡	Front of vehicle

(4) Place a tread center mark on the back of both rear tires, and measure the distance between the marks (dimension B).

(5) Move the vehicle forward by pushing it slowly to rotate the rear wheels 180°.
CAUTION:
Be sure not to rotate the tires more than 180°. If the wheels have been over-rotated, repeat from the setting up of the toe-in gauge.

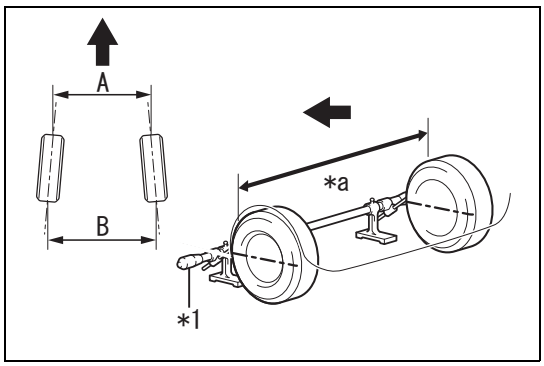

(6) Measure the distance between the marks at the front of the tires (dimension A).

Captions in illustration

*1	Toe-in gauge
*a	Dimension A
➡	Front of vehicle

(7) Calculate the toe-in.
Standard value: 2±3mm {0.08±0.12in}
NOTE:
Toe-in = Dimension B - Dimension A

AL

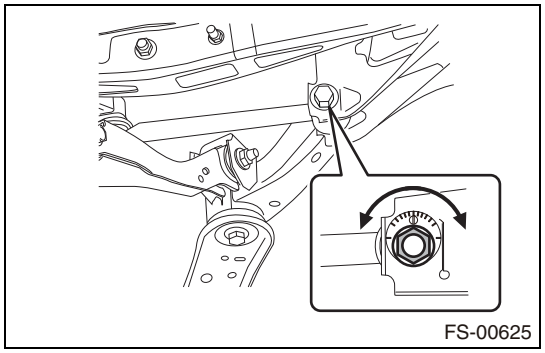
FS-00625

5. Toe-in adjustment
   (1) Loosen the toe adjust cam nut.
   (2) When adjusting the toe-in of the left and right wheels at the same time, adjust the toe-in by turning the toe adjust plate No. 2.
   Standard value: 2±2 mm {0.08±0.08 in}
   NOTE:
   When the left and right toe adjust plate No.2 are turned by one graduation, the toe will change approx. 5.2mm {0.20in}.
   (3) Tighten the toe adjust cam nut.
   Standard value:T=100N·m {1020kgf·cm} {73.8ft·lbf}

6. Camber inspection
   (1) Lift up the vehicle on a level surface.
   (2) Set the wheel alignment gauge. (Refer to AL - 2)
   (3) Calibrate the wheel alignment gauge. (Refer to AL - 2)
   (4) Lower the vehicle and check the camber.

Standard value

Camber
-1°10' ±45'

CAUTION:
- Perform the inspection while the vehicle is at curb weight (with the spare tire, jack, and service tools loaded and with a full fuel tank).
- The limit of difference between the left and right camber values is 45'.
- Remove foreign matter from the axle hub end surface before performing the inspection.

NOTE:
The rear camber is not adjustable. When the value is not within the left and right difference range, check the suspension parts and the joint for deformation, and replace the faulty parts, if any.

(5) Remove the wheel alignment gauge.

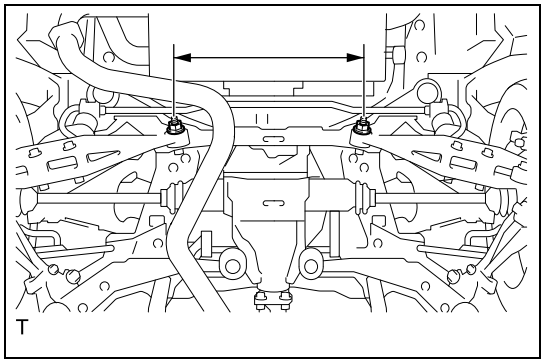
T

7. Rear suspension inspection
   (1) Inspection of rear suspension member
      (a) Check the distance between the center of rear suspension arm ASSY No. 2 LH and RH mounting bolts.
      Standard value: 457.5±3mm {18.01±0.12in}
      NOTE:
      If it is out of standard value, replace with a new rear suspension member.

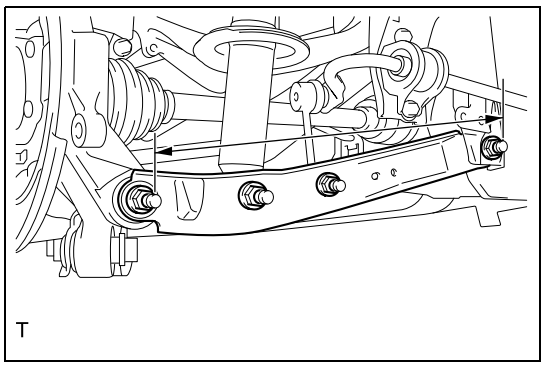
T

   (2) Inspection of rear suspension arm ASSY No. 2
      (a) Check the distance between the center of rear suspension arm ASSY No. 2 mounting bolts.
      Standard value: 450.9±2 mm {17.75±0.08 in}
      NOTE:
      If it is out of standard value, replace with a new rear suspension arm ASSY No. 2.
   (3) Inspection and adjustment of toe-in and camber
      (a) Check the toe-in and camber, and if they are out of standard value, adjust them with the play in the mounting portion of the rear suspension member or that of the upper control arm and rear suspension arm.

8. Confirmation of front tires in the straight-ahead position
9. VDC sensor mid point setting (Refer to BC - 15)

AL

Front suspension

Front suspension system
Symptom table FP-2

Front strut tower bar
Exploded view FP-3
Removal FP-4
Installation FP-5

Front shock absorber
Exploded view FP-6
Removal FP-8
Disassembly FP-9
Inspection FP-11
Assembly FP-11
Installation FP-13
Disposal FP-13

Front suspension lower arm
Exploded view FP-14
Removal FP-15
Disassembly FP-16
Inspection FP-17
Assembly FP-17
Installation FP-18

Front stabilizer bar
Exploded view FP-20
Removal FP-21
Inspection FP-23
Installation FP-23

Front suspension member
Exploded view FP-25
Removal FP-27
Installation FP-29

Flexible draw stiffener (tS model)
Exploded view FP-30
Removal FP-31
Disassembly FP-32
Assembly FP-33
Installation FP-33

Front suspension system

Symptom table

Front suspension

Symptoms	Inspection items	Reference pages
Poor stability of vehicle	Tires (improper pressure, uneven wear)	TW - 2
	Front wheel alignment	AL - 2
	Rear wheel alignment	AL - 7
	Hub bearings	AD - 8
	Front shock absorber w/ coil spring	FP - 11
	Rear shock absorber w/ coil spring	RP - 8
Vehicle bottoms out	Vehicle (excessive weight)	-
	Front shock absorber w/ coil spring	FP - 11
	Rear shock absorber w/ coil spring	RP - 8
Vehicle experiences abnormal vibration or tilting	Tires (improper pressure, uneven wear)	TW - 2
	Front shock absorber w/ coil spring	FP - 11
	Rear shock absorber w/ coil spring	RP - 8
Abnormal vibration of front wheel	Tires (improper pressure, uneven wear)	TW - 2
	Wheels (out of balance)	TW - 2
	Front wheel alignment	AL - 2
	Front suspension lower arm	FP - 17
	Front shock absorber w/ coil spring	FP - 11
	Hub bearings	AD - 8
Abnormal tire wear	Tires (improper pressure, uneven wear)	TW - 2
	Wheels (out of balance)	TW - 2
	Front wheel alignment	AL - 2
	Rear wheel alignment	AL - 7

Front strut tower bar

Exploded view

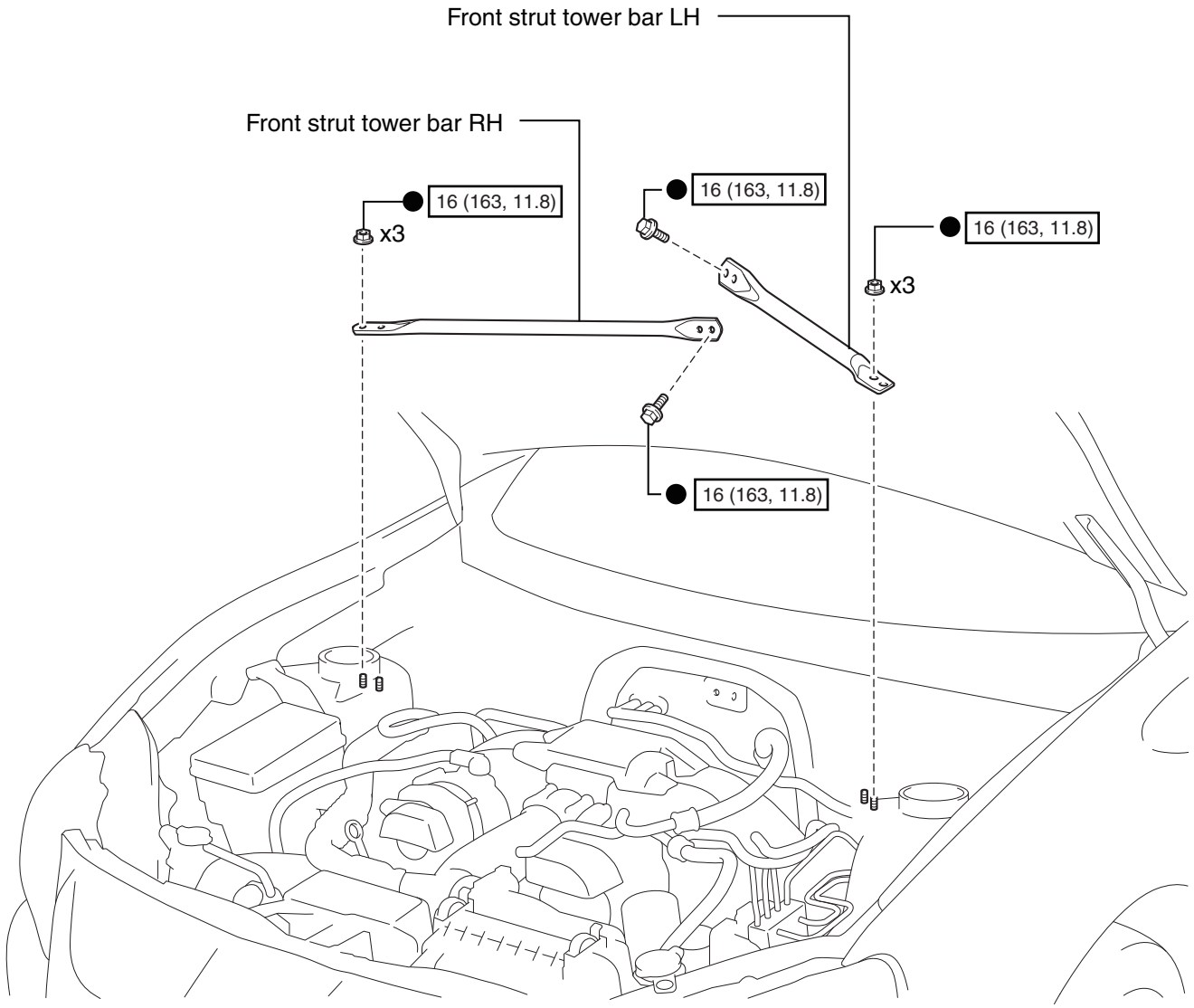

N•m {kgf•cm, ft•lbf} : Tightening torque

● Non-reusable parts

FS-00555

FP

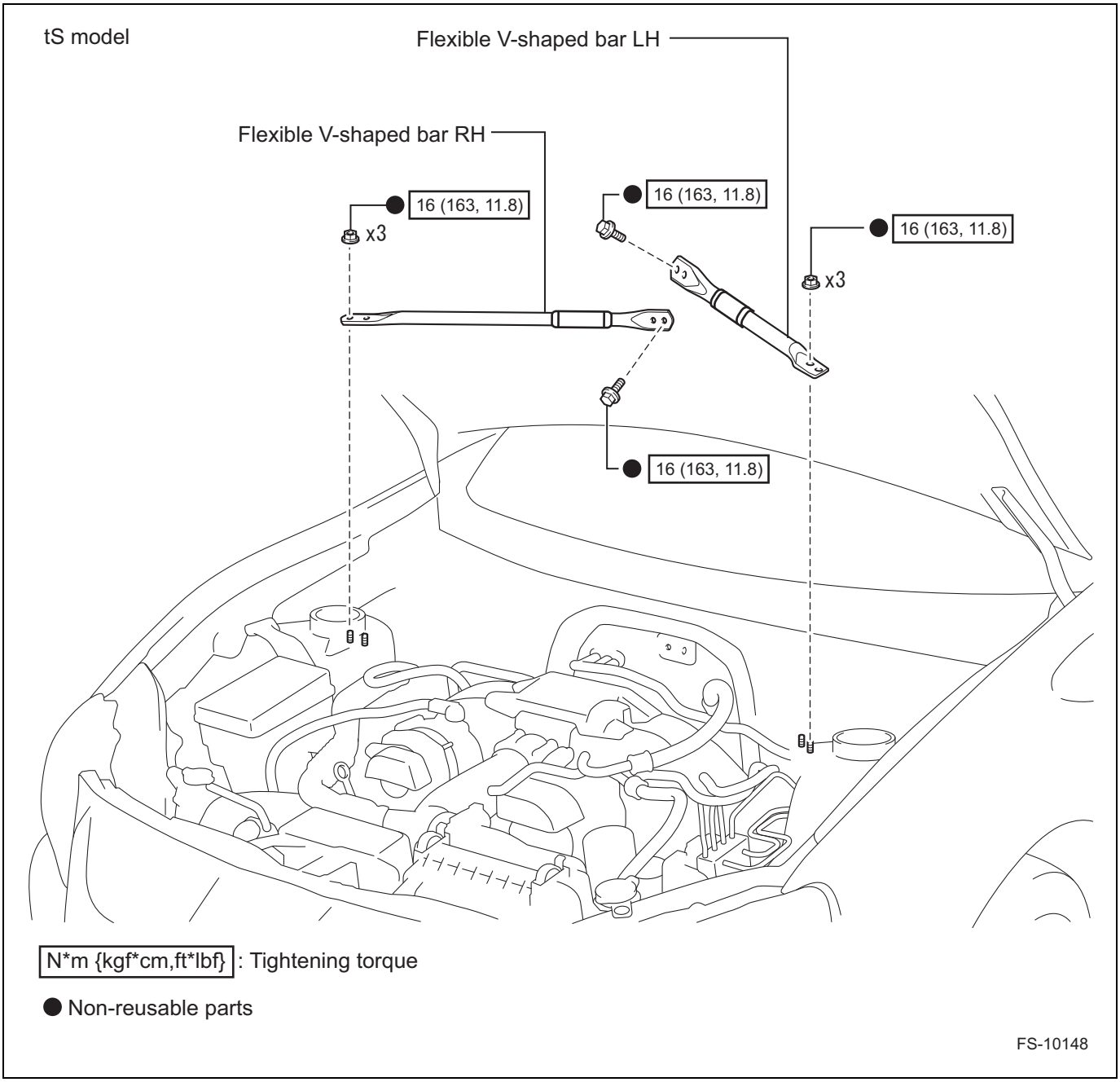

FP

Removal

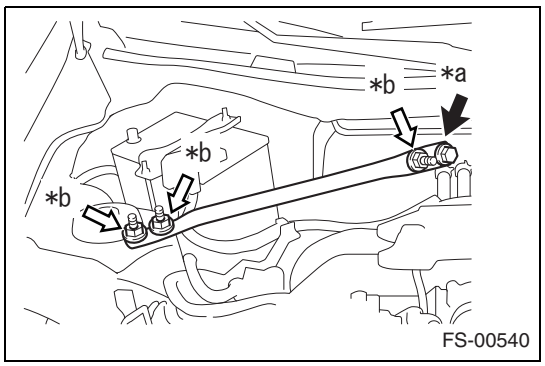

1. Removal of front strut tower bar RH
   (1) Remove the bolt and three nuts, and remove the front strut tower bar RH.

Captions in illustration

*a	Bolt
*b	Nut

2. Removal of flexible V-shaped bar RH (tS model)

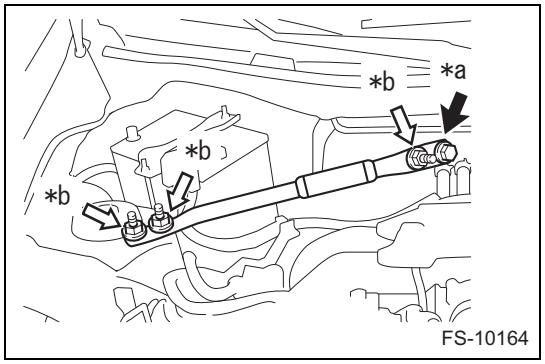

(1) Remove the bolt and 3 nuts, and then remove the flexible V-shaped bar RH.

Captions in illustration

*a	Bolt
*b	Nut

3. Removal of front strut tower bar LH
   NOTE:
   Service the LH side in the same procedure as the RH side.
4. Removal of flexible V-shaped bar LH (tS model)
   NOTE:
   Service the LH side in the same procedure as the RH side.

Installation

1. Installation of front strut tower bar LH
   (1) Using a new bolt and three new nuts, install the front strut tower bar LH.
   Standard value:T=16N·m {163kgf·cm} {11.8ft·lbf}
2. Installation of flexible V-shaped bar LH (tS model)
   (1) Using a new bolt and three new nuts, install the flexible V-shaped bar LH.
   Standard value:T=16N·m {163kgf·cm} {11.8ft·lbf}
   CAUTION:
   When installing the flexible V-shaped bar, face the boot to the center of the vehicle and adjust the direction so that the "STI" mark is visible.
3. Installation of front strut tower bar RH
   NOTE:
   Service the RH side in the same procedure as the LH side.
4. Installation of flexible V-shaped bar RH (tS model)
   NOTE:
   Service the RH side in the same procedure as the LH side.

Front shock absorber

Exploded view

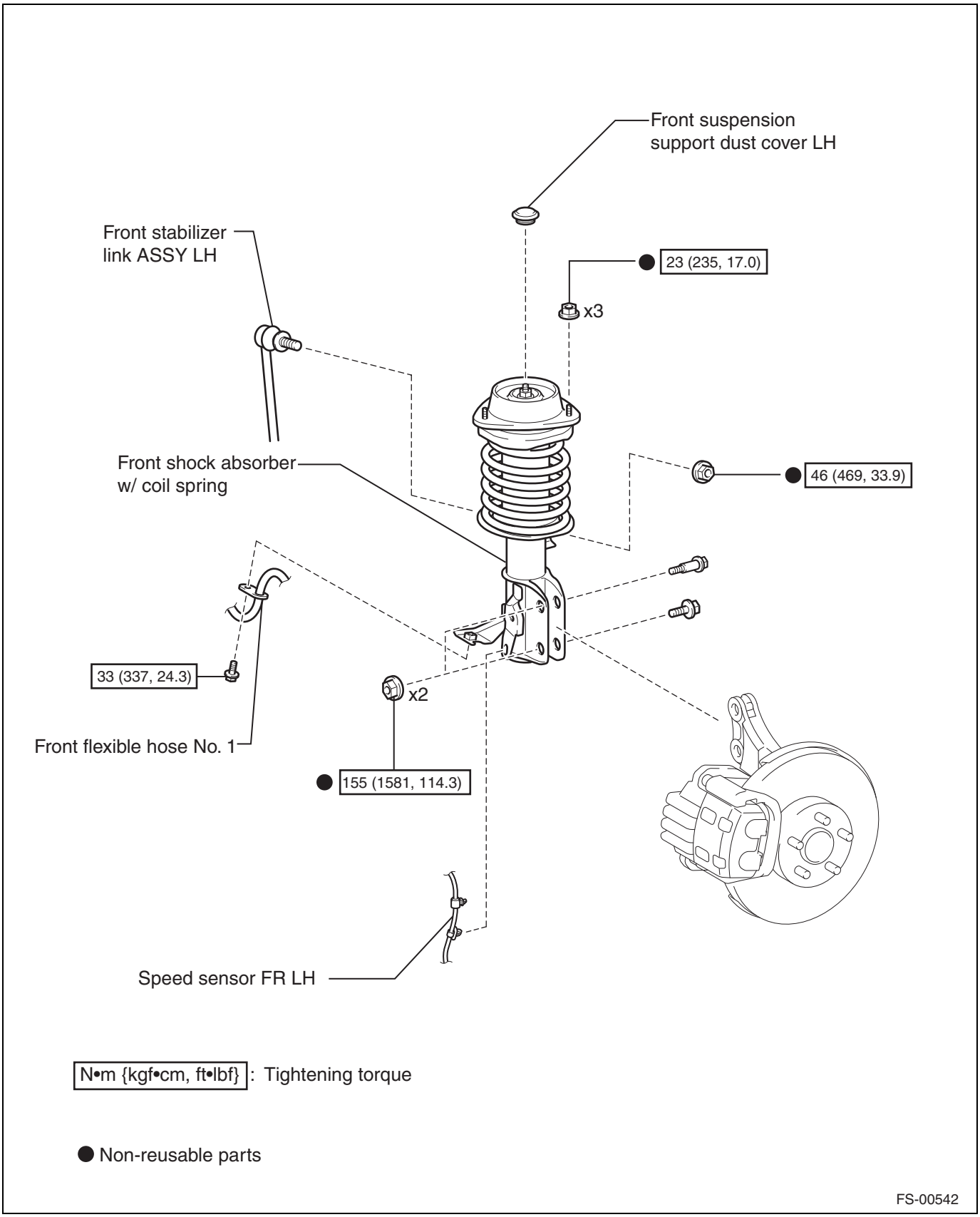

FP

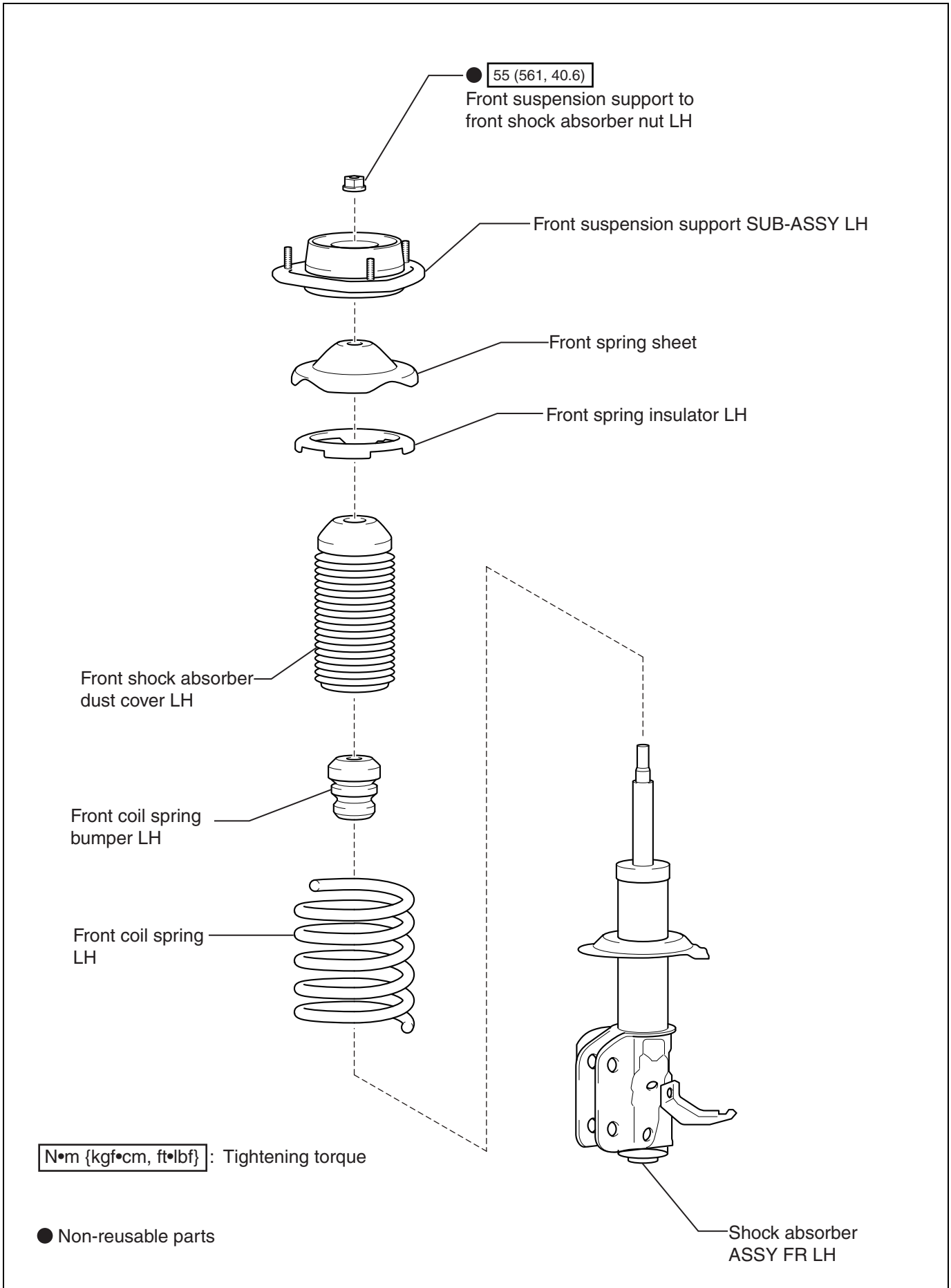
● 55 (561, 40.6)
Front suspension support to front shock absorber nut LH
Front suspension support SUB-ASSY LH
Front spring sheet
Front spring insulator LH
Front shock absorber dust cover LH
Front coil spring bumper LH
Front coil spring LH
Shock absorber ASSY FR LH
N•m {kgf•cm, ft•lbf}: Tightening torque
● Non-reusable parts
FS-00543

FP

Removal

NOTE:

- The following servicing procedures are for the RH side.
- Service the LH side in the same procedure as the RH side.

1. Removal of front tire

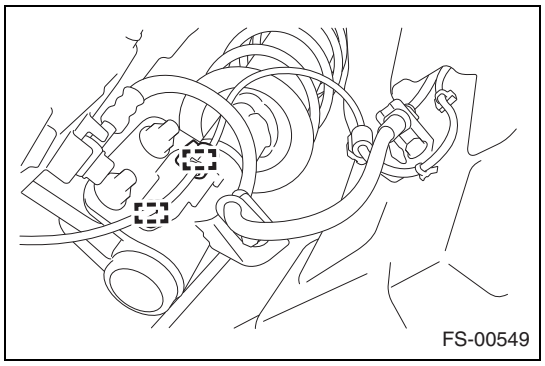

2. Disconnection of speed sensor FR RH
   (1) Remove the two clamps, and remove the speed sensor FR RH.

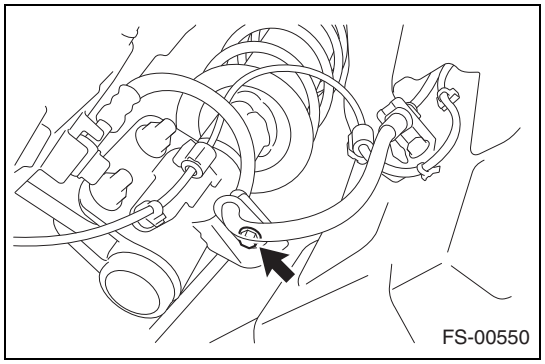

3. Disconnection of front flexible hose No.1
   (1) Remove the bolt, and disconnect the front flexible hose No. 1 from the front shock absorber w/ coil spring.

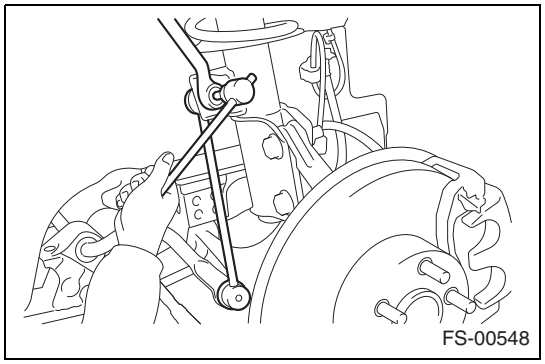

4. Disconnection of front stabilizer link ASSY RH
   (1) Secure the stud bolt and remove the nut.
   (2) Disconnect the front stabilizer link ASSY RH from the front shock absorber w/ coil spring.

5. Removal of front suspension support dust cover RH
   NOTE:
   If the front shock absorber w/ coil spring must be disassembled, remove the front suspension support dust cover RH.

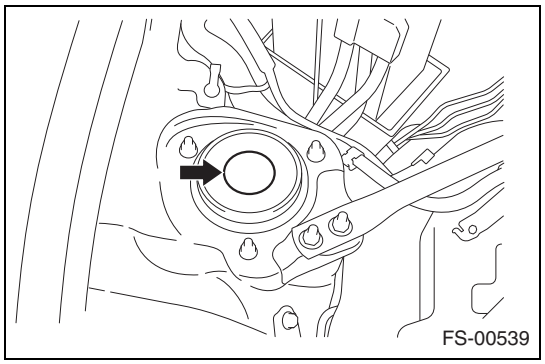

   (1) Remove the front suspension support dust cover RH.

FP

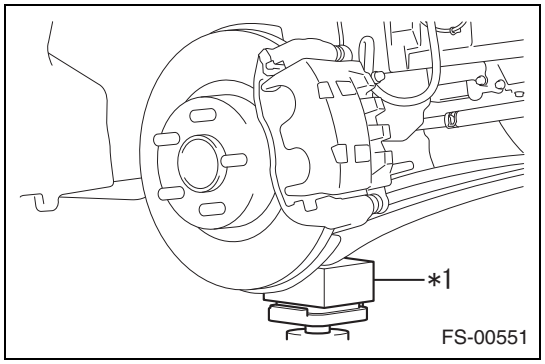

6. Removal of front shock absorber w/ coil spring
   (1) Support the front suspension lower arm ASSY RH with a garage jack.

Captions in illustration

*1	Wooden block

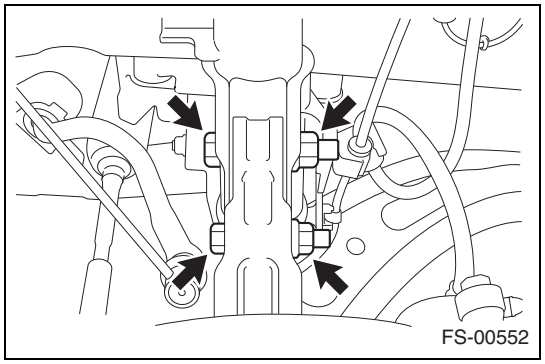

(2) Remove the two bolts and two nuts, and disconnect the front shock absorber w/ coil spring from the steering knuckle RH.

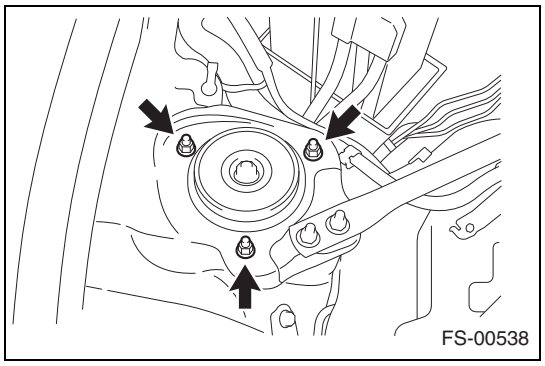

(3) Remove the three nuts of the front suspension support SUB-ASSY RH.
(4) Remove the front shock absorber w/ coil spring from the vehicle.

Disassembly

NOTE:

- The following procedure is for LH side.
- Service the LH side and the RH side using the same procedure.

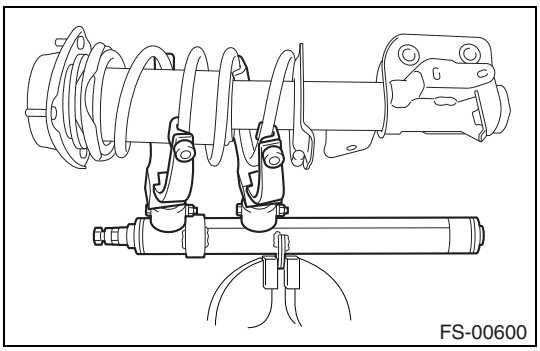

1. Removal of front suspension support to front shock absorber nut LH
   (1) Secure a spring compressor in a vise.

FP

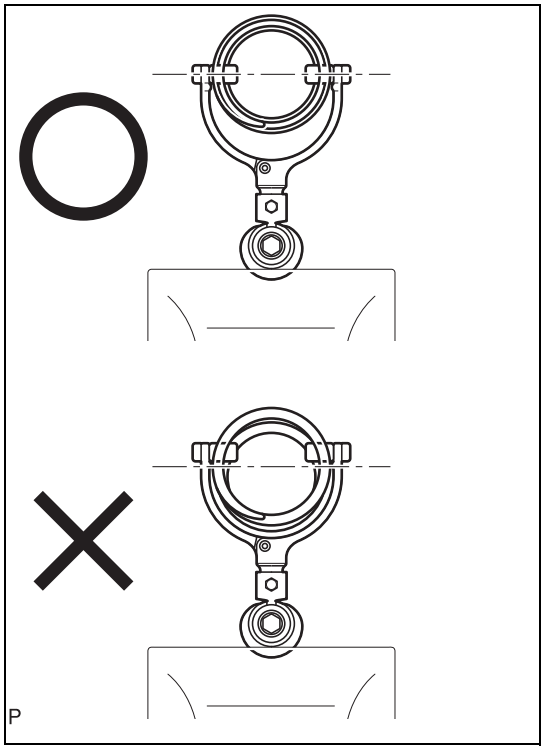

(2) Place the hooks of the spring compressor arms across the diameter of the front coil spring LH.
WARNING:
- Make sure that the upper and lower hooks of the spring compressor are placed as far from each other as possible on the front coil spring LH.
- Make sure that the claws of the hooks are securely in place.

(3) Using a spring compressor, compress the front coil spring LH.
WARNING:
- If the front coil spring LH becomes curved like a bow during the compression process, stop the procedure immediately, and remove and reconnect the spring compressor.
- Do not compress to the point where parts of the coil spring touch each other.
- Do not use an impact wrench.

(4) Prevent the piston rod from turning using a deep socket hexagon.

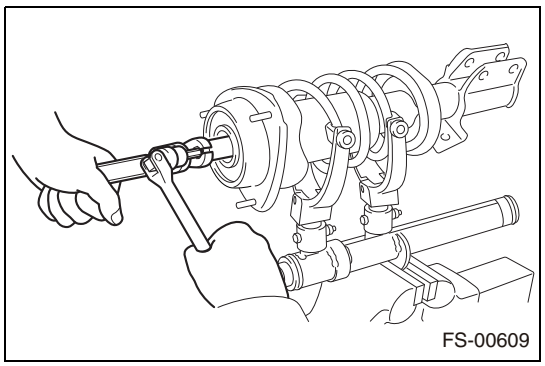

(5) After making sure that the front coil spring LH is free, remove the front suspension support to front shock absorber nut LH from the shock absorber ASSY FR LH using the SST.
SST 20399AG000
WARNING:
Do not remove the front suspension support to front shock absorber nut LH without the front coil spring LH being free.
CAUTION:
- Be careful not to damage or deform the threaded portion.
- Fully insert the deep socket hexagon.

2. Removal of front suspension support SUB-ASSY LH
   (1) Remove the front suspension support SUB-ASSY LH.
3. Removal of front spring seat
   (1) Remove the front spring seat.
4. Removal of front spring insulator LH
   (1) Remove the front spring insulator LH.
5. Removal of front shock absorber dust cover LH
   (1) Remove the front shock absorber dust cover LH.
6. Removal of front spring bumper LH
   (1) Remove the front spring bumper LH.
7. Removal of front coil spring LH
   (1) Release the spring compressor and remove the front coil spring LH.

Inspection

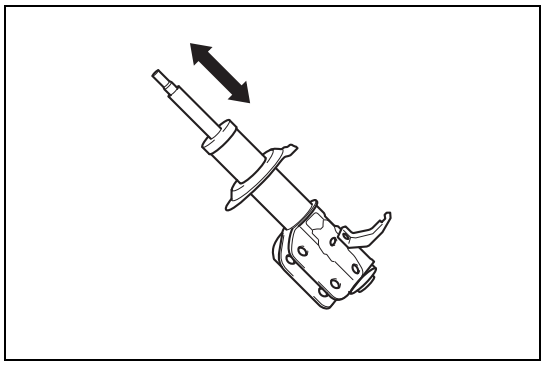

1. Inspection of shock absorber ASSY FR LH
   (1) Operation inspection of shock absorber ASSY FR LH
      (a) Press the shock absorber ASSY FR LH to the lowest position while holding it up and let it extend on its own. Repeat the process four times or more.
      (b) Inspect the shock absorber ASSY FR LH.
         Criteria: When it is compressed at a certain speed, the heaviness of each stroke is consistent, and it does not make any abnormal movement or sound. Also, when it extends, it returns to its original length at a consistent speed without any abnormal sound.

         NOTE:

         If defective, replace the shock absorber ASSY FR LH with a new part.

Assembly

NOTE:

- The following procedure is for LH side.
- Service the LH side and the RH side using the same procedure.

1. Installation of front spring bumper LH
   (1) Install the front spring bumper LH on the shock absorber ASSY FR LH.
2. Installation of front shock absorber dust cover LH
   (1) Install the front shock absorber dust cover LH on the shock absorber ASSY FR LH.

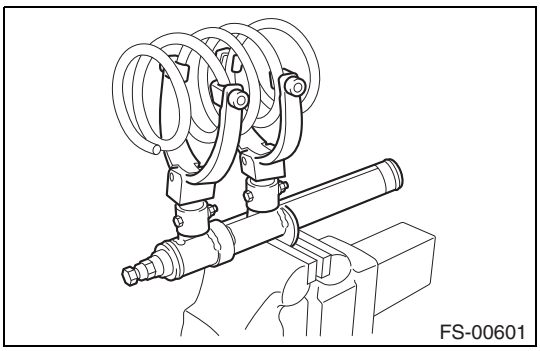

3. Installation of front coil spring LH
   (1) Secure a spring compressor in a vise.

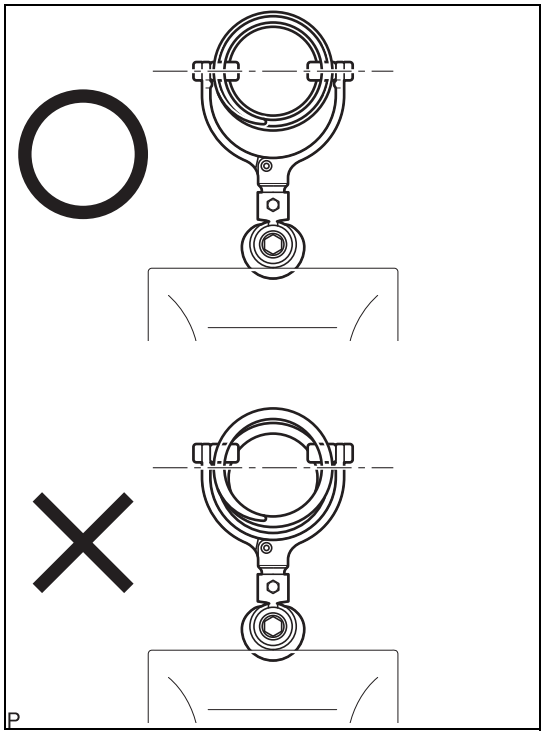

(2) Place the hooks of the spring compressor arms across the diameter of the front coil spring LH.
WARNING:
- Make sure that the upper and lower hooks of the spring compressor are placed as far from each other as possible on the front coil spring LH.
- Make sure that the claws of the hooks are securely in place.

(3) Using the spring compressor, compress the front coil spring LH.
WARNING:
- If the front coil spring LH becomes curved like a bow during the compression process, stop the procedure immediately, and remove and reconnect the spring compressor.
- Do not compress to the point where parts of the coil spring touch each other.
- Do not use an impact wrench.

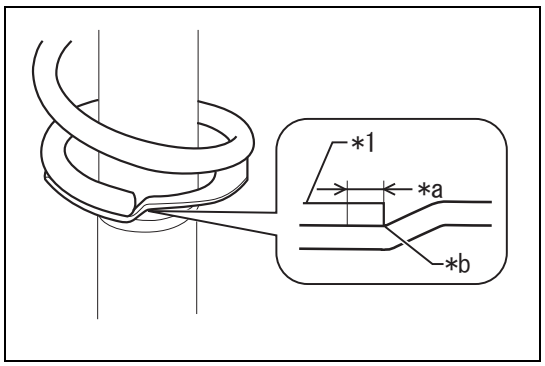

(4) Set the front coil spring LH so that the end surface of the spring seats well in the stopper section of the lower spring seat.

Captions in illustration

*1	Front coil spring LH
*a	0 to 10mm {0 to 0.394in}
*b	Stopper section of spring seat

4. Installation of front spring insulator LH
   (1) Install the front spring insulator LH on the shock absorber ASSY FR LH.
5. Installation of front spring seat
   (1) Install the front spring seat on the shock absorber ASSY FR LH.
6. Installation of front suspension support SUB-ASSY LH
7. Installation of front suspension support to front shock absorber nut LH
   (1) Prevent the piston rod from turning using a deep socket hexagon.

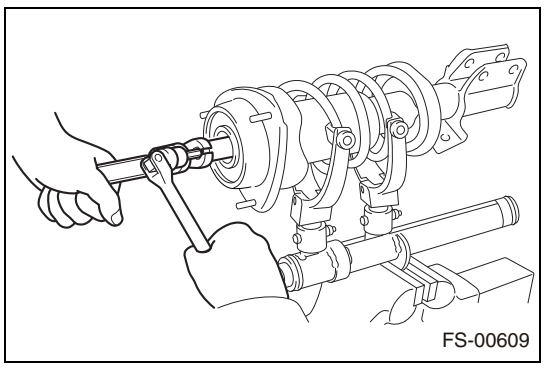

(2) Using the SST and a new front suspension support to front shock absorber nut LH, install the front suspension support on the shock absorber ASSY FR LH.
SST 20399AG000
Standard value:T=55N·m {561kgf·cm} {40.6ft·lbf}
CAUTION:
- When extending the overall tool length by combining a torque wrench with the SST during tightening, tightening to the point where the value on the torque wrench reaches the specified tightening torque will cause the actual tightening torque to be excessive. (Refer to IN - 6)
- Be careful not to damage or deform the threaded portion.
- Fully insert the deep socket hexagon.

FP

Installation

NOTE:

- The following procedure is for LH side.
- Service the LH side and the RH side using the same procedure.

1. Installation of front shock absorber w/ coil spring
   (1) Using three new nuts, install the front shock absorber w/ coil spring (upper side).
   Standard value:T=23N·m {235kgf·cm} {17.0ft·lbf}
   (2) Using the two bolts and two new nuts, install the shock absorber w/ coil spring to the steering knuckle LH.
   CAUTION:
   Insert the bolts from the rear of the vehicle.
   Standard value:T=155N·m {1581kgf·cm} {114.3ft·lbf}
2. Installation of front stabilizer link ASSY LH
   (1) Install the front stabilizer link ASSY LH to the shock absorber w/ coil spring.
   (2) Secure the stud bolt and install the part with a new nut.
   Standard value:T=46N·m {469kgf·cm} {33.9ft·lbf}
3. Installation of front flexible hose No.1
   (1) Using a bolt, install the front flexible hose No. 1 to the shock absorber w/ coil spring.
   Standard value:T=33N·m {337kgf·cm} {24.3ft·lbf}
4. Installation of front suspension support dust cover LH
   (1) Install the front suspension support dust cover LH on the shock absorber w/ coil spring.
5. Installation of speed sensor FR LH
   (1) Install the two clamps of the wiring harness for the speed sensor FR LH on the shock absorber w/ coil spring.
6. Installation of front tire
   Standard value:T=120N·m {1224kgf·cm} {88.5ft·lbf}
7. Stabilization of vehicle
   (1) Lower and remove the jack, and bounce the vehicle several times to stabilize the front suspension.
8. Inspection and adjustment of front wheel alignment (refer to AL - 2)
9. Initialization of head light leveling computer (refer to LE - 38)
10. Headlight beam adjustment (refer to LE - 51)
11. VDC sensor mid point setting (refer to BC - 15)

Disposal

1. Disposal of shock absorber ASSY FR LH
   (1) Secure the shock absorber ASSY FR LH in a vertical position.
   (2) Press down on the piston rod with hands by approximately 70mm {2.756in}.

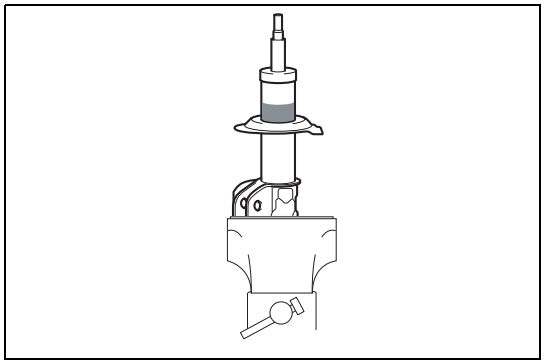

   (3) Using a saw, etc., slowly make a hole in the section shown in the figure to purge the gas.

Captions in illustration

▭	Range to be bored

CAUTION:

- Wear protective eye wear.
- Since the gas pressure may spray metal chips, perform the procedure by covering the saw with a piece of cloth, etc.

NOTE:

Gas to be released is colorless, odorless, and harmless.

FP

Front suspension lower arm

Exploded view

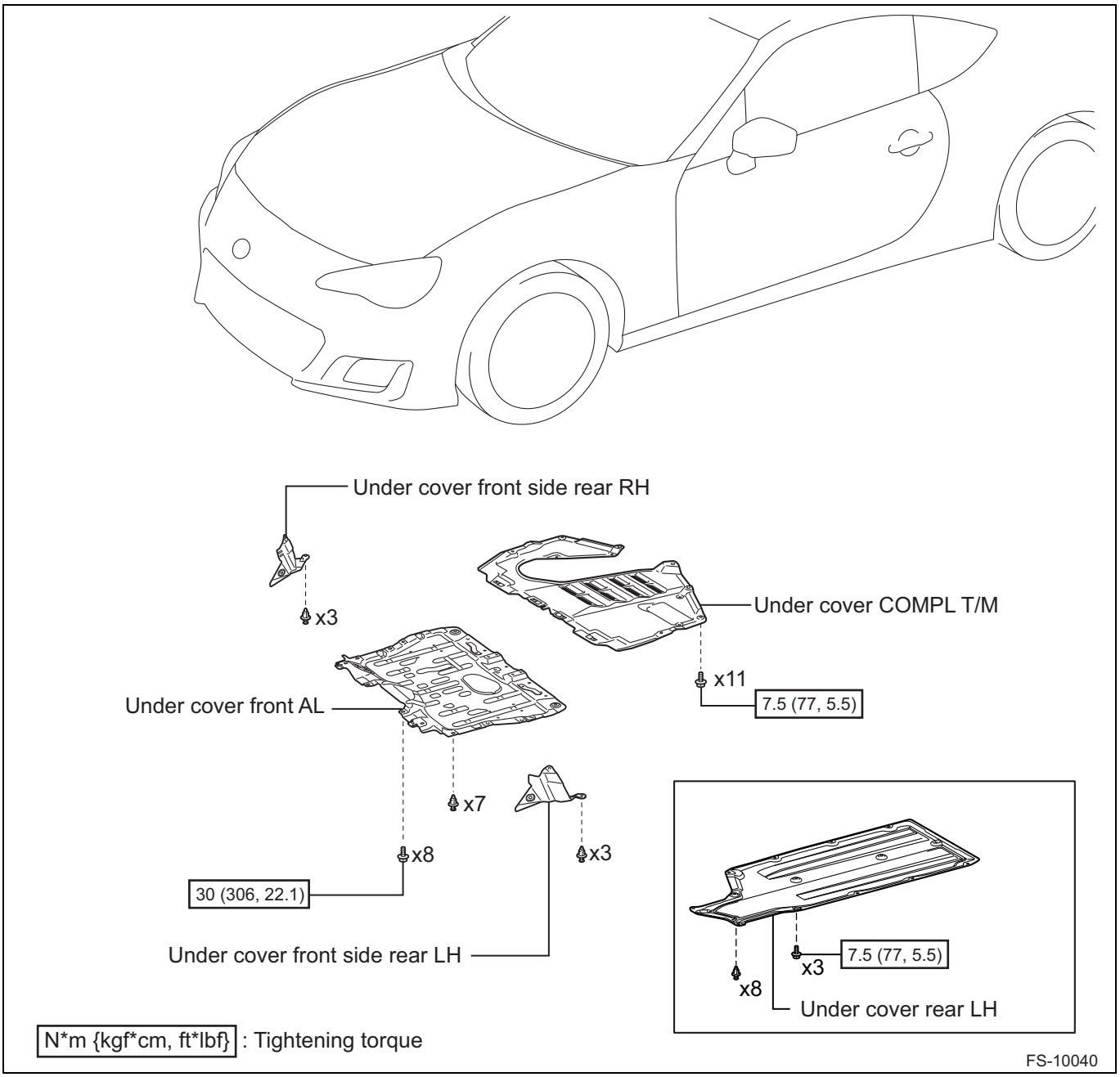

FP

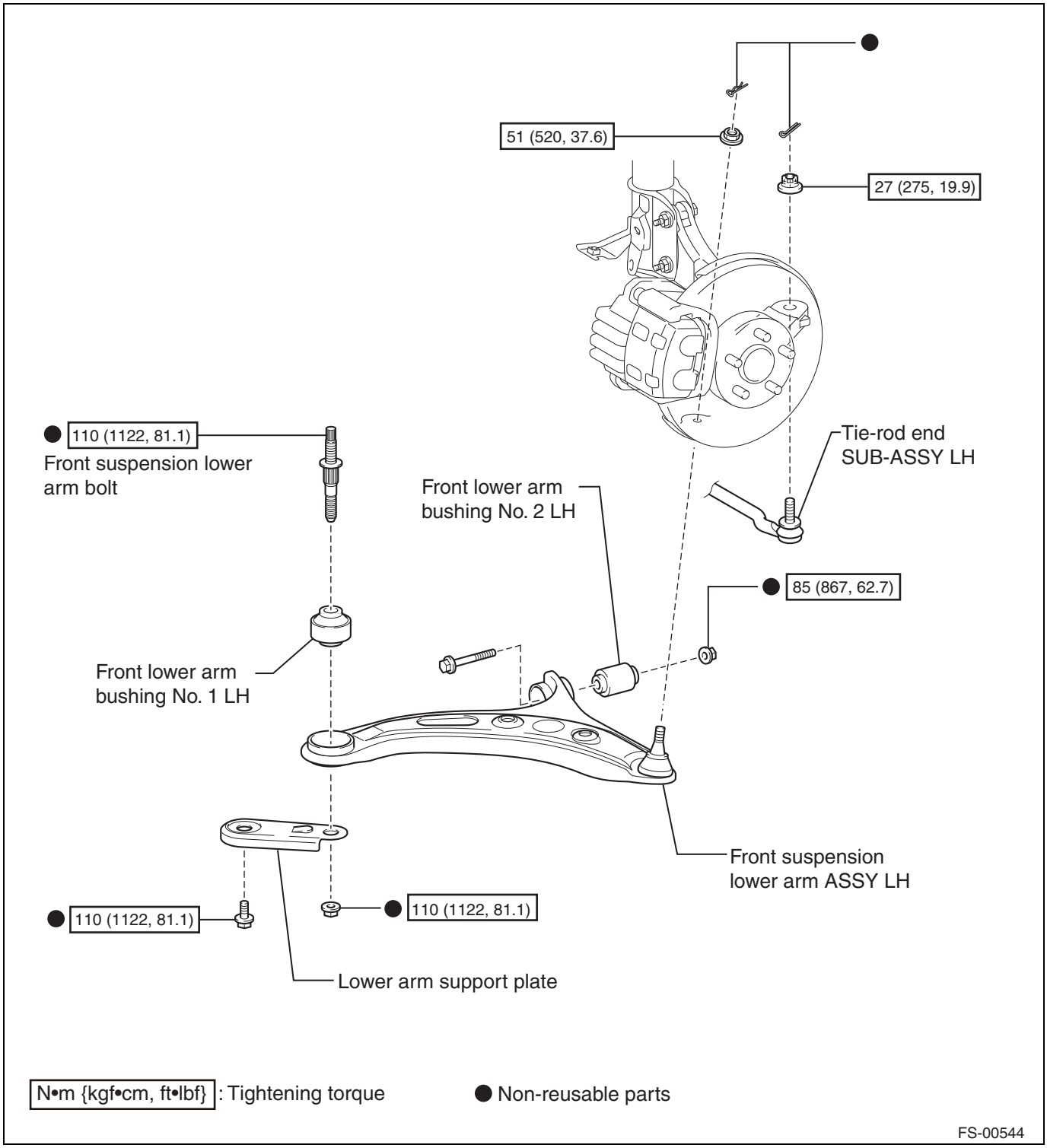

Removal

NOTE:

- The following procedure is for LH side.
- Service the RH side in the same procedure as the LH side.

1. Removal of front tire
2. Removal of undercover front AL (Refer to IE - 39)
3. Removal of undercover COMPL T/M (Refer to IE - 40)

FP

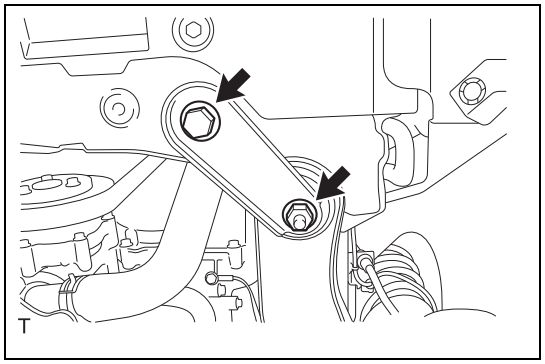

4. Removal of lower arm support plate
   (1) Remove the bolt and nut, and remove the lower arm support plate.
5. Disconnection of tie-rod end SUB-ASSY LH (Refer to AD - 10)
6. Disconnection of steering knuckle LH (Refer to AD - 11)
7. Removal of stabilizer link ASSY LH (Refer to FP - 22)

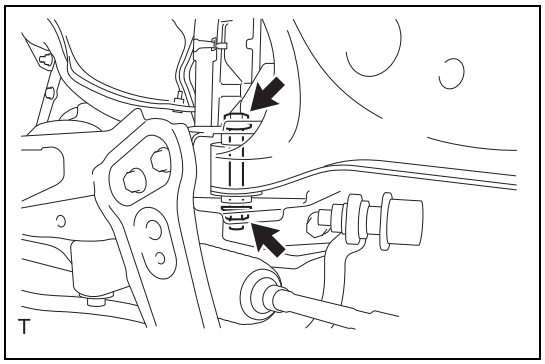

8. Removal of front suspension lower arm ASSY LH
   (1) Remove the bolt and nut, and remove the front suspension lower arm ASSY LH.

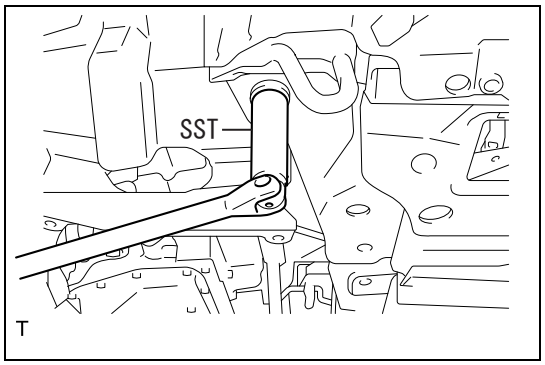

9. Removal of front suspension lower arm bolt
   (1) Using the SST, remove the front suspension lower arm bolt.
   SST 20299AG020

FP

Disassembly

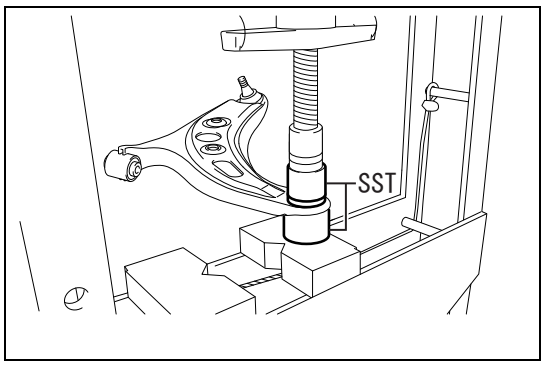

1. Removal of front lower arm bushing No. 1 LH
   (1) Using the SST, remove the front lower arm bushing No. 1 LH.
   SST 20299AG000, 20299AG010

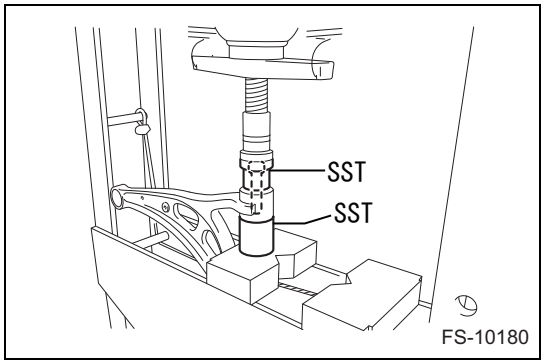

2. Removal of front lower arm bushing No. 2 LH
   (1) Using the SST, remove the front lower arm bushing No. 2 LH.
   SST 927680000

Inspection

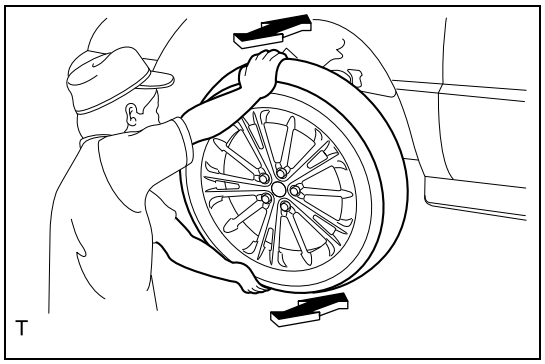

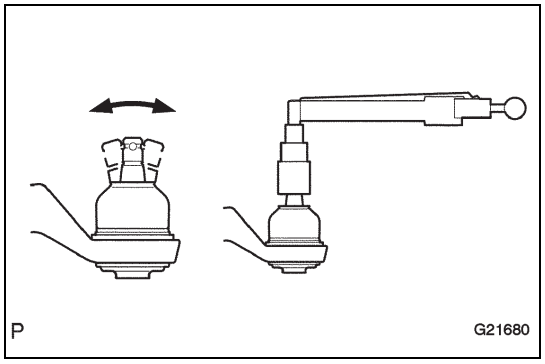

1. Inspection of front suspension lower arm ASSY LH
   (1) Rotation inspection of ball joint
      (a) Check that there is no play by moving the upper and lower portions of front tire in an axial direction with the brake pedal depressed.
      (b) If there is play, replace the front suspension lower arm ASSY LH.
      (c) Check that there is no play by moving the upper and lower portions of front tire in an axial direction with the brake pedal released.
      (d) If there is play, replace the front axle hub.
      (e) Place the nut on the stud of the lower arm.
      (f) Vibrate and turn the stud.
      Criteria: There is no abnormal interference or play during vibration and turning.
      (g) If there is abnormal interference or play during vibration and turning, replace the front suspension lower arm ASSY LH.
   (2) Dust cover inspection
      (a) Check the dust cover for cracks or grease leakage.
      (b) If there are cracks or grease leakage on the dust cover, replace the front suspension lower arm ASSY LH.

FP

Assembly

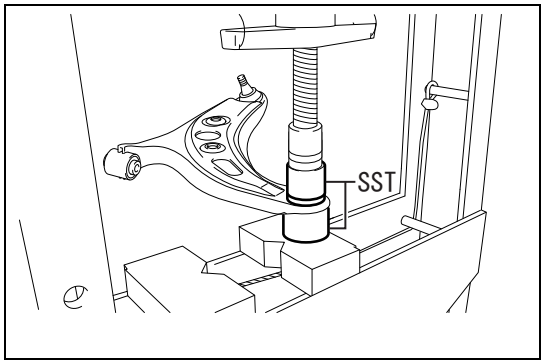

1. Installation of front lower arm bushing No. 1 LH
   (1) Using the SST, install the front lower arm bushing No. 1 LH in the front suspension lower arm ASSY LH so that the dimensions are within the range shown in the figure.
   SST 20299AG000, 20299AG010

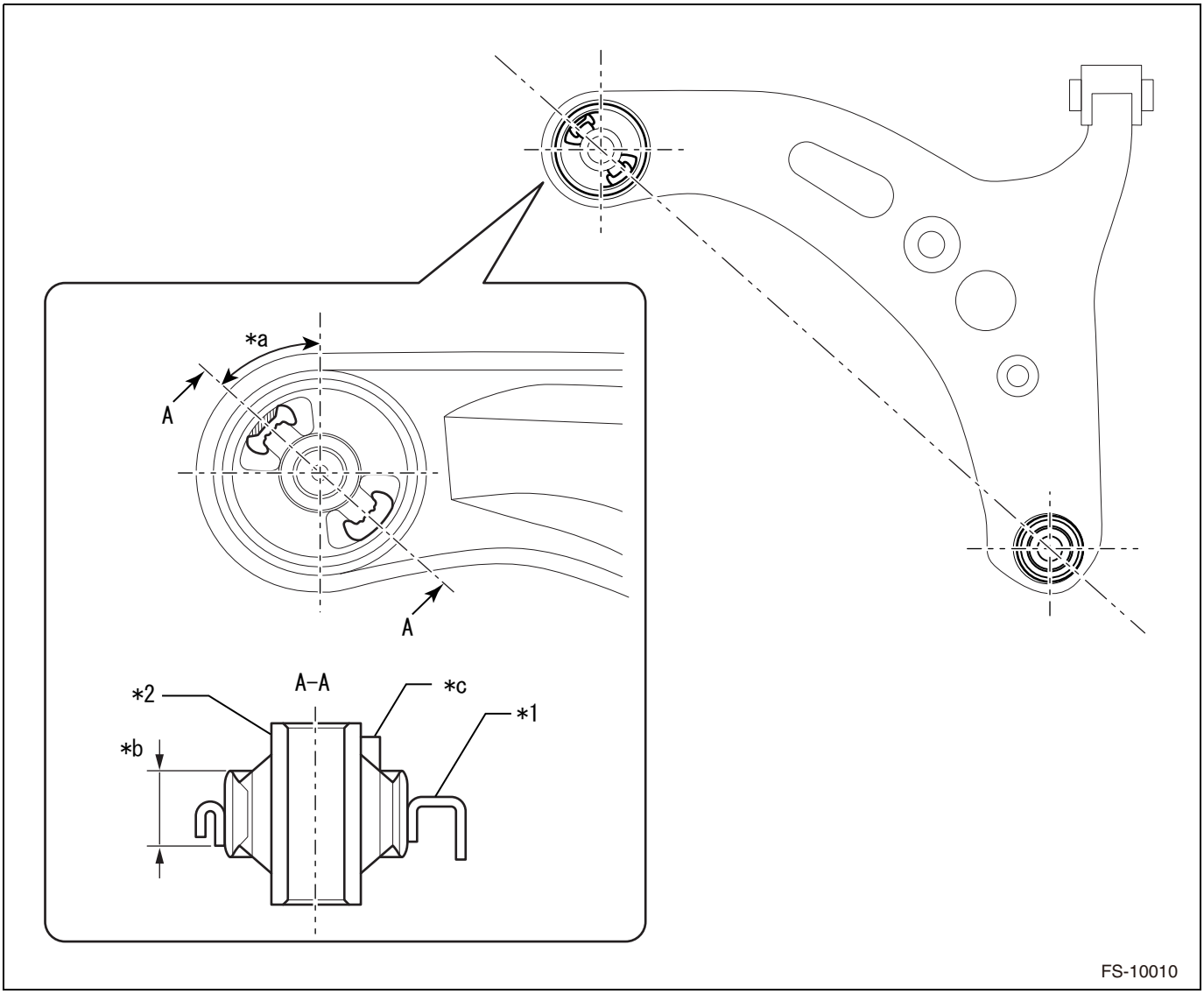

Captions in illustration

*1	Front suspension lower arm ASSY LH	*2	Front lower arm bushing No. 1 LH
*a	44 to 50°	*b	25.0 to 26.0 mm {0.984 to 1.024 in}
*c	Rubber protrusion	—	—

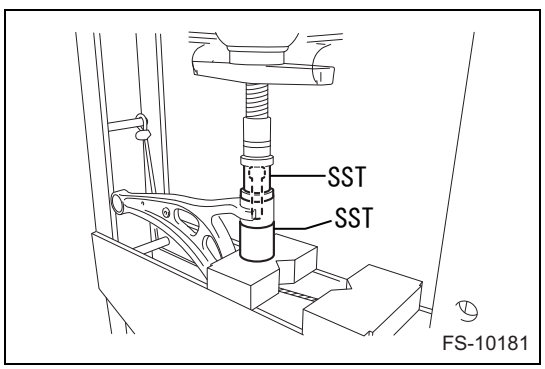

2. Installation of front lower arm bushing No. 2 LH
   (1) Using the SST, install the front lower arm bushing No. 2 LH in the front suspension lower arm ASSY LH.
   SST 927680000

Installation

NOTE:

- The following procedure is for LH side.
- Service the RH side in the same procedure as the LH side.

1. Installation of front suspension lower arm bolt
   (1) Using the SST, install a new front suspension lower arm bolt.
   SST 20299AG020
   Standard value:T=110N·m {1122kgf·cm} {81.1ft·lbf}
2. Temporary tightening of front suspension lower arm ASSY LH
   (1) Temporarily tighten the part using the bolt and a new nut.
   CAUTION:
   Insert the bolt from the front of the vehicle.
3. Installation of steering knuckle LH
   With a nut, install the front suspension lower arm ASSY LH to the steering knuckle LH.
   Standard value:T=51N·m {520kgf·cm} {37.6ft·lbf}
4. Installation of tie-rod end SUB-ASSY LH (Refer to AD - 12)
5. Temporary tightening of lower arm support plate
   (1) Using a new bolt and nut, install the lower arm support plate.
   Standard value:T=110N·m {1122kgf·cm} {81.1ft·lbf}
6. Installation of stabilizer link ASSY LH (Refer to FP - 24)
7. Installation of front tire
   Standard value:T=120N·m {1224kgf·cm} {88.5ft·lbf}
8. Stabilization of vehicle (Refer to FP - 13)
9. Final tightening of front suspension lower arm ASSY LH
   (1) Fully tighten the bolts and nuts.
   Standard value:T=85N·m {867kgf·cm} {62.7ft·lbf}
10. Installation of undercover COMPL T/M (Refer to IE - 46)
11. Installation of undercover front AL (Refer to IE - 46)
12. Inspection and adjustment of front wheel alignment (Refer to AL - 2)
13. Initialization of head light leveling computer (refer to LE - 38)
14. Headlight beam adjustment (Refer to LE - 51)
15. VDC sensor mid point setting (Refer to BC - 15)

Front stabilizer bar

Exploded view

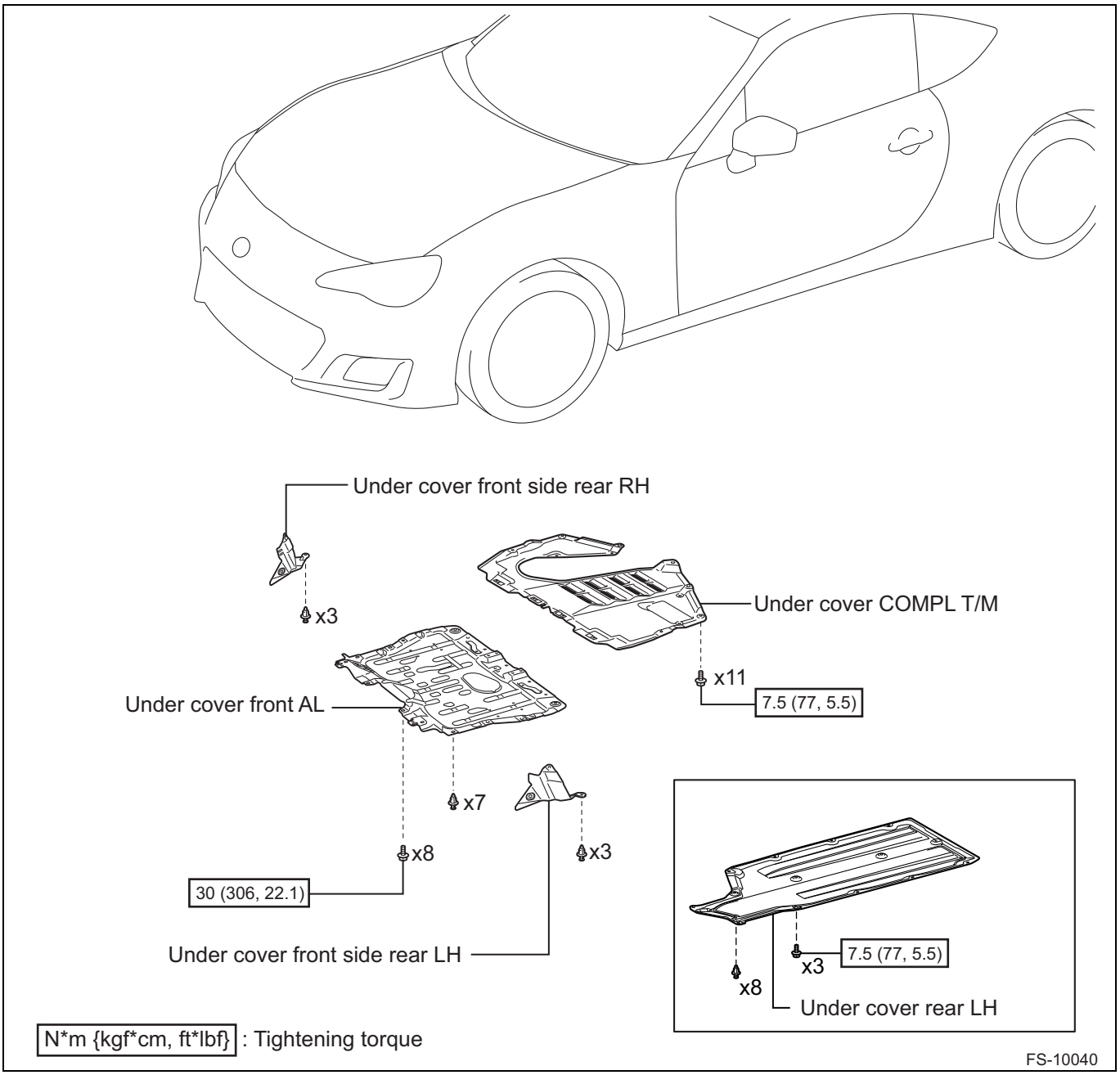

FP

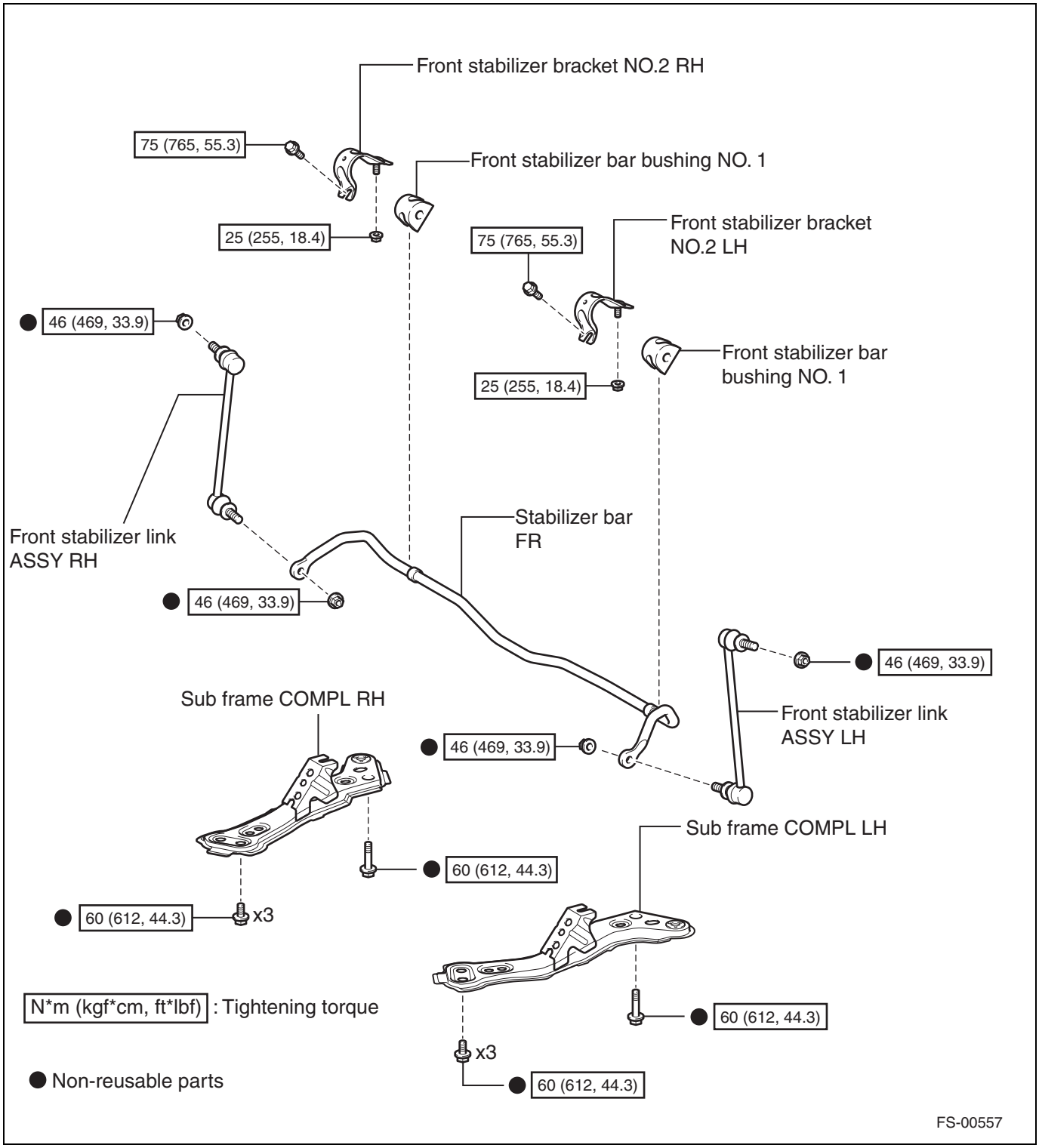

Removal

1. Removal of front tire
2. Removal of undercover front AL (Refer to IE - 39)
3. Removal of undercover COMPL T/M (Refer to IE - 40)
4. Removal of under cover rear LH (Refer to EM - 83)

5. Removal of undercover front side rear LH

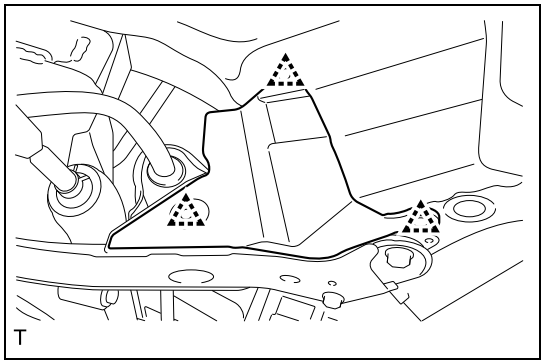

(1) Remove the three clips and remove the undercover front side rear.

6. Removal of undercover front side rear RH
NOTE:
Remove the part in the same manner as LH side.

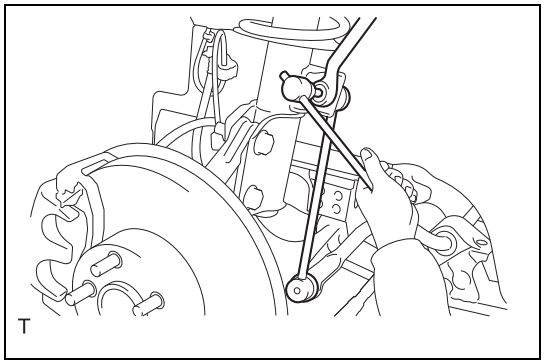

7. Removal of front stabilizer link ASSY LH
(1) Secure the stud bolt and remove the nut.
(2) Remove the front stabilizer link ASSY LH from the front shock absorber w/ coil spring.

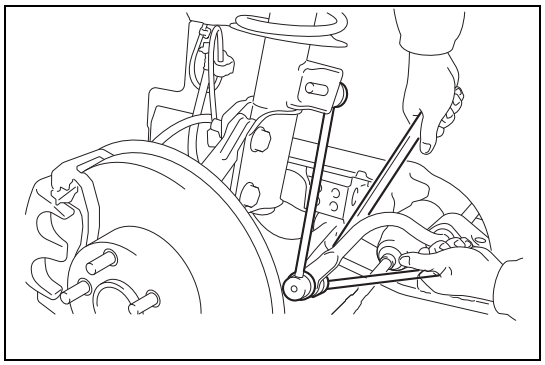

(3) Secure the stud bolt and remove the nut.
(4) Remove the front stabilizer link ASSY LH from the stabilizer bar FR.

8. Removal of front stabilizer link ASSY RH
NOTE:
Service the RH side in the same procedure as the LH side.

9. Removal of flexible draw stiffener ASSY (tS model) (Refer to FP - 32)

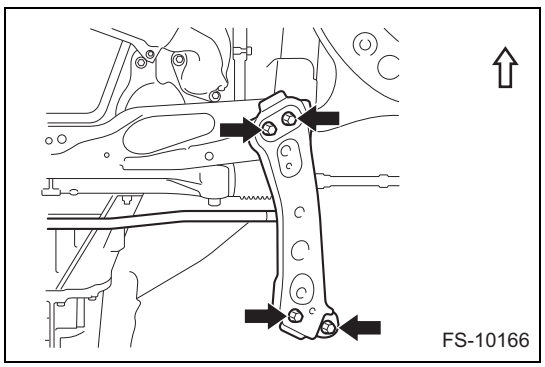

10. Removal of sub frame COMPL LH
(1) Remove the four bolts, and remove the sub frame COMPL LH with the stabilizer bar FR.

Captions in illustration

➡	Bolt
⇨	Front of vehicle

FP

11. Removal of sub frame COMPL RH
    NOTE:
    Service the RH side in the same procedure as the LH side.

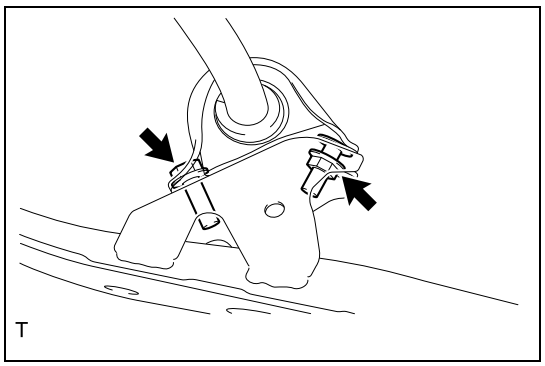

12. Removal of front stabilizer bracket No. 2 LH
    (1) Remove the bolt and nut, and remove the front stabilizer bracket No. 2 LH.
13. Removal of front stabilizer bracket No. 2 RH
    NOTE:
    Service the RH side in the same procedure as the LH side.
14. Removal of stabilizer bar FR
    (1) Remove the stabilizer bar FR.
15. Removal of front stabilizer bar bushing No. 1 (installed on LH side)
    (1) Remove the front stabilizer bar bushing No. 1 (installed on LH side) from the stabilizer bar FR.
16. Removal of front stabilizer bar bushing No. 1 (installed on RH side)
    NOTE:
    Service the RH side in the same procedure as the LH side.

Inspection

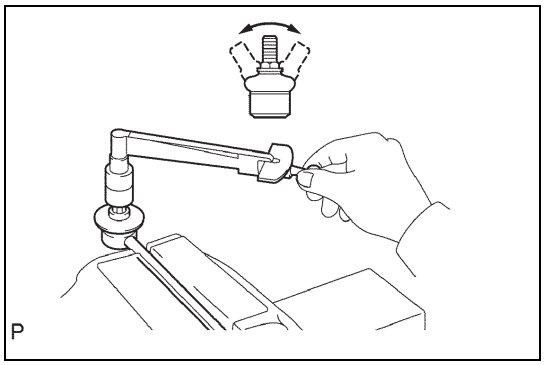

1. Inspection of front stabilizer link ASSY LH
   (1) Inspection of ball joint
      (a) Using aluminum plate, secure the front stabilizer link ASSY LH in a vise.
      (b) Install the mounting nut on the stud of the front stabilizer link ASSY LH.
      (c) Vibrate and turn the stud.
         Criteria: There is no abnormal interference or play during vibration and turning.
      (d) If there is abnormal interference or play during vibration and turning, replace the front stabilizer link ASSY LH.
   (2) Dust cover inspection
      (a) Check the dust cover for cracks or grease leakage.
      (b) If there are cracks or grease leakage on the dust cover, replace the front stabilizer link ASSY LH.

Installation

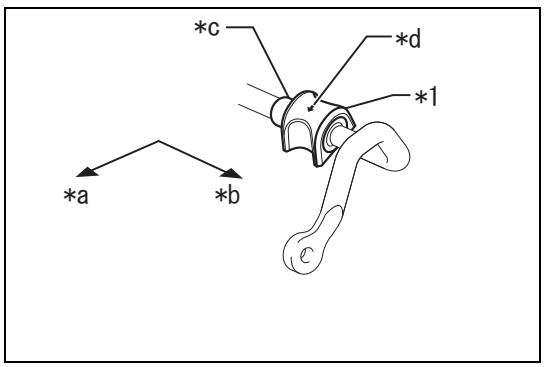

1. Installation of front stabilizer bar bushing No. 1 (installed on LH side)
   (1) Install the front stabilizer bar bushing No. 1 on the outer side of the vehicle than the ring section of the stabilizer bar FR.
      CAUTION:
      Install the front stabilizer bar bushing No. 1 with the arrow mark facing the front of the vehicle.

Captions in illustration

*a	Front of vehicle
*b	Vehicle outside
*c	Ring section
*d	Arrow mark

FP

*1	Front stabilizer bar bushing No. 1

2. Installation of front stabilizer bar bushing No. 1 (installed on RH side)
   NOTE:
   Service the RH side in the same procedure as the LH side.

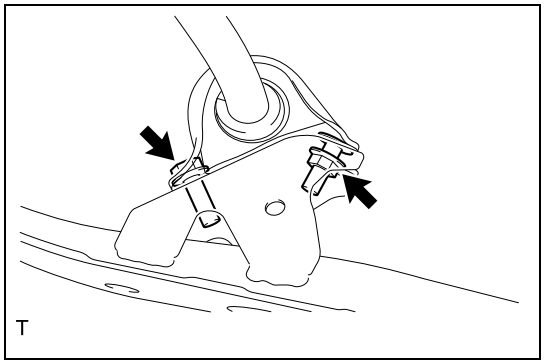

3. Installation of front stabilizer bracket No. 2 LH
   (1) Using the bolt and nut, install the front stabilizer bracket No. 2 LH on the sub frame COMPL LH.
   Standard value:Bolt
   T=75N·m {765kgf·cm} {55.3ft·lbf}
   Nut
   T=25N·m {255kgf·cm} {18.4ft·lbf}
4. Installation of front stabilizer bracket No. 2 RH
   NOTE:
   Service the RH side in the same procedure as the LH side.
5. Installation of sub frame COMPL LH
   (1) Using four new bolts, install the stabilizer bar FR with the sub frame COMPL LH.
   Standard value:T=60N·m {612kgf·cm} {44.3ft·lbf}
6. Installation of sub frame COMPL RH
   NOTE:
   Service the RH side in the same procedure as the LH side.
7. Installation of flexible draw stiffener ASSY (tS model) (Refer to FP - 33)
8. Installation of front stabilizer link ASSY LH
   (1) Secure the stud bolt, and install the front stabilizer link ASSY LH to the stabilizer bar FR with a new nut.
   Standard value:T=46N·m {469kgf·cm} {33.9ft·lbf}
   (2) Secure the stud bolt, and install the front stabilizer link ASSY LH to the front shock absorber w/ coil spring with a new nut.
   Standard value:T=46N·m {469kgf·cm} {33.9ft·lbf}
9. Installation of front stabilizer link ASSY RH
   NOTE:
   Service the RH side in the same procedure as the LH side.
10. Installation of undercover front side rear LH
    (1) Install the undercover front side rear LH with the three clips.
11. Installation of undercover front side rear RH
    NOTE:
    Service the RH side in the same procedure as the LH side.
12. Installation of under cover rear LH (Refer to EM - 111)
13. Installation of undercover COMPL T/M (Refer to IE - 46)
14. Installation of undercover front AL (Refer to IE - 46)
15. Installation of front tire
    Standard value:T=120N·m {1224kgf·cm} {88.5ft·lbf}
16. Stabilization of vehicle (Refer to FP - 13)
17. Inspection of front tires in straight-ahead position
18. Inspection and adjustment of front wheel alignment (Refer to AL - 2)
19. Initialization of head light leveling computer (refer to LE - 38)
20. Headlight beam adjustment (Refer to LE - 51)
21. VDC sensor mid point setting (Refer to BC - 15)

Front suspension member

Exploded view

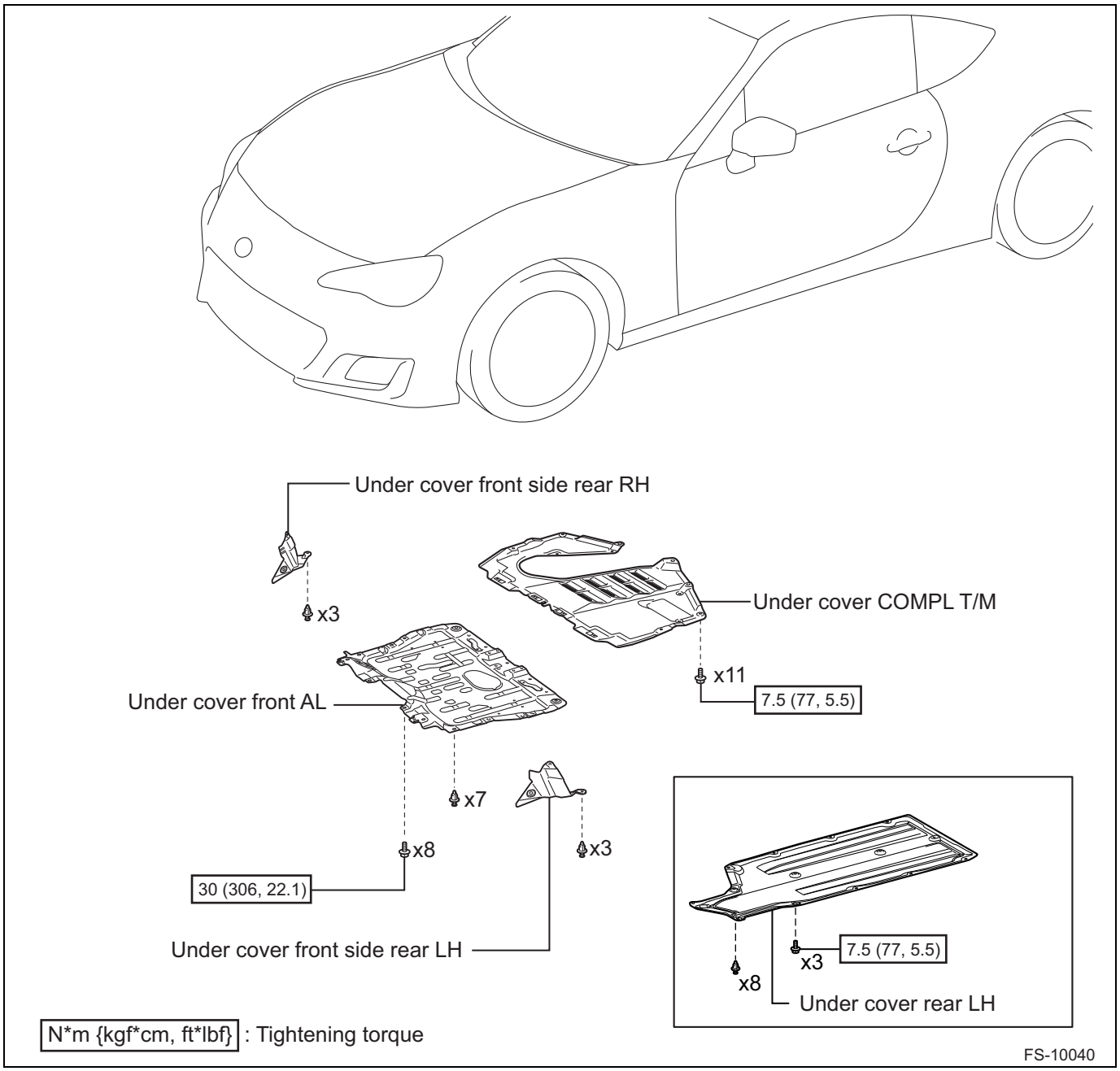

FP

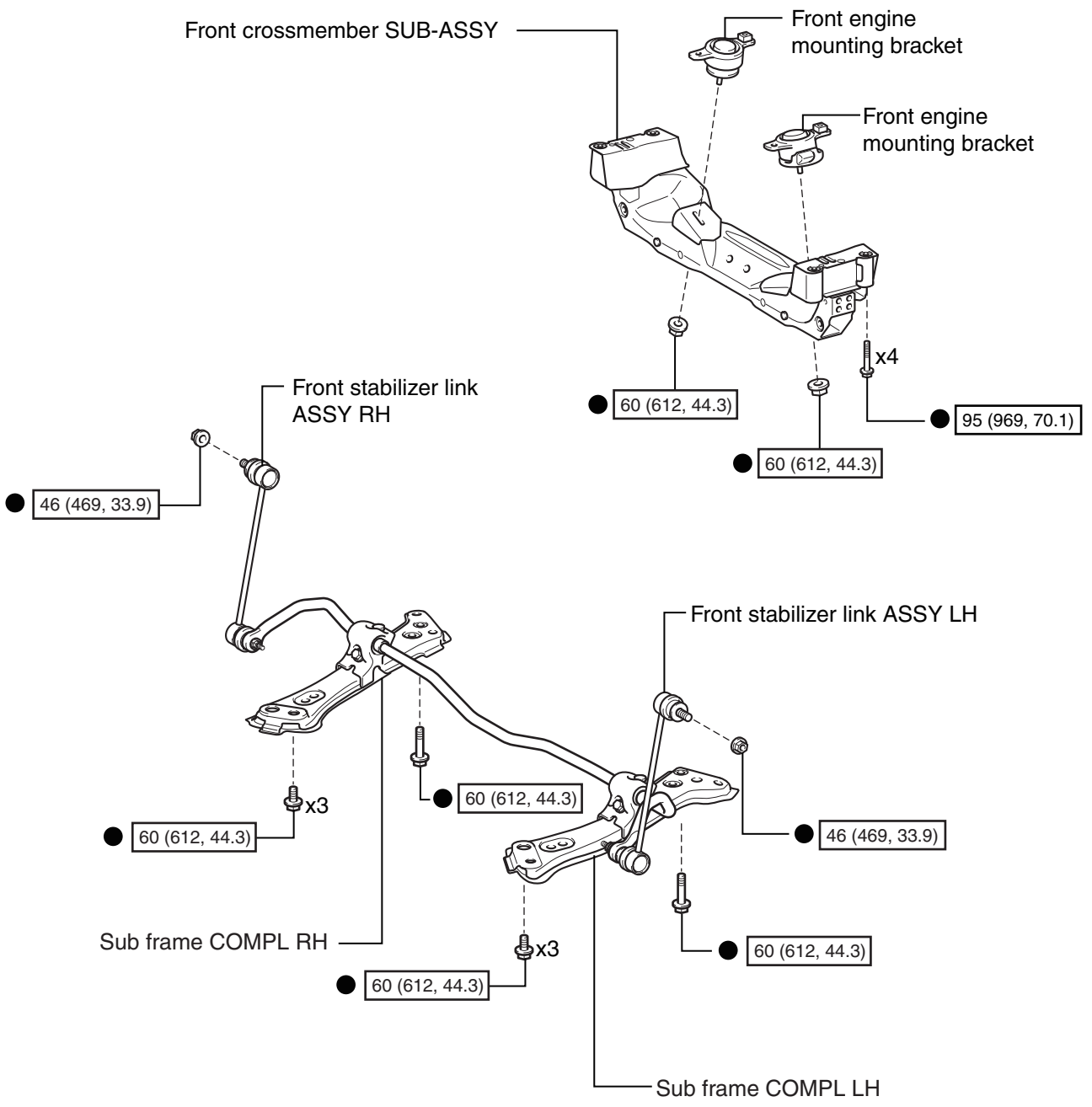

FP

N*m {kgf*cm,ft*lbf} : Tightening torque

● Non-reusable parts

FS-00722

tS model

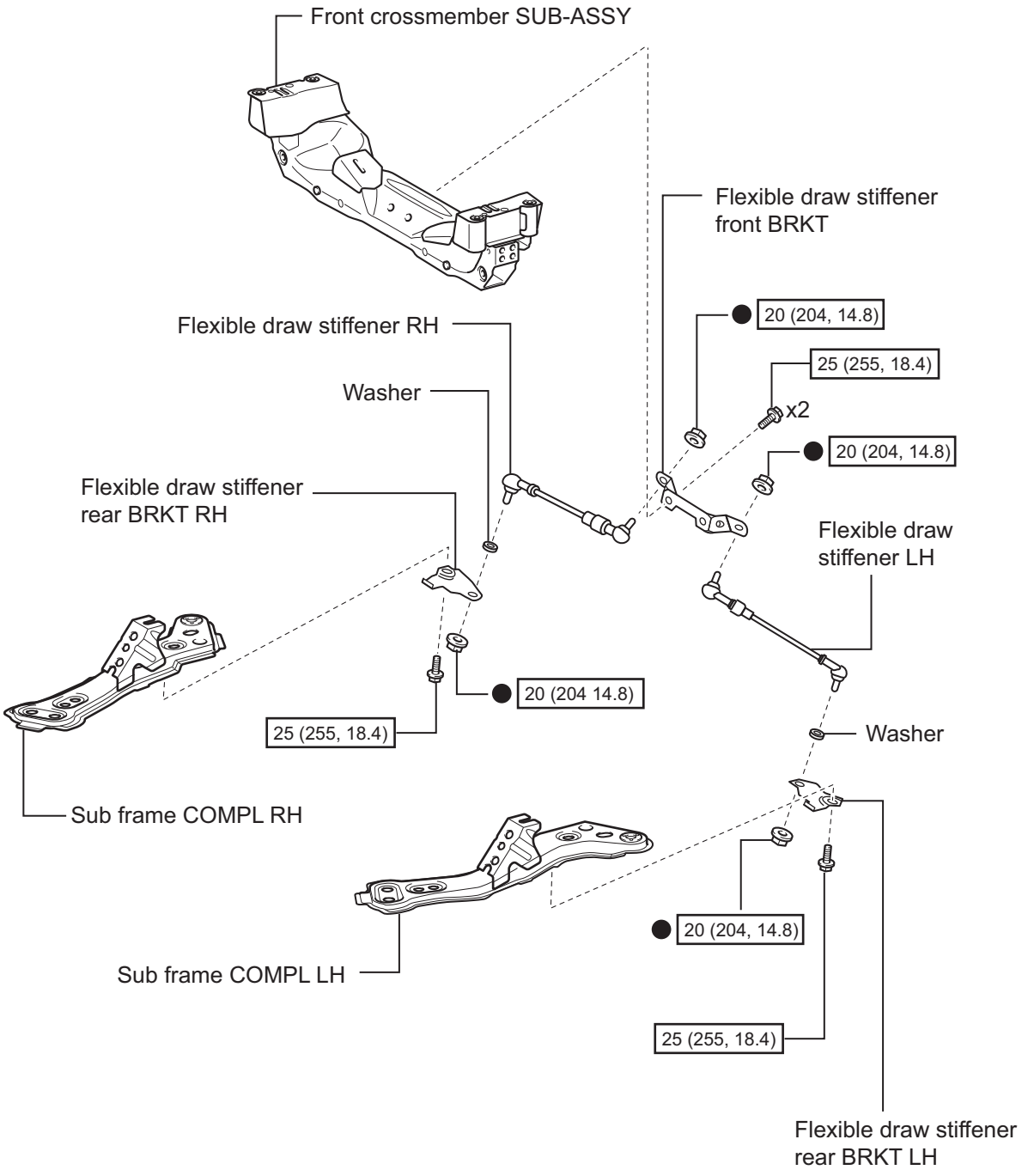

N*m {kgf*cm,ft*lbf} : Tightening torque

● Non-reusable parts

FS-10139

Removal

1. Removal of undercover front AL (Refer to IE - 39)
2. Removal of undercover COMPL T/M (Refer to IE - 40)
3. Removal of under cover rear LH (Refer to EM - 83)

4. Removal of undercover front side rear LH

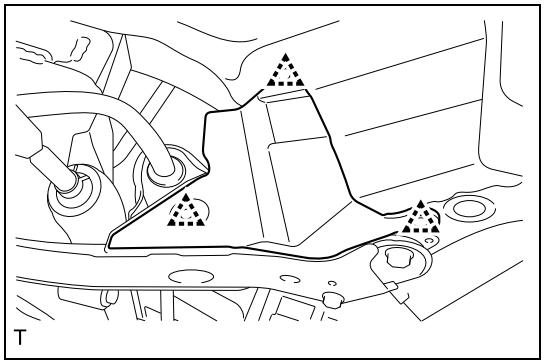

(1) Remove the three clips and remove the undercover front side rear.

5. Removal of undercover front side rear RH
   NOTE:
   Remove the part in the same manner as LH side.
6. Installation of engine hanger (Refer to EM - 85)
7. Removal of front suspension lower arm ASSY LH (Refer to FP - 15)
8. Removal of front suspension lower arm ASSY RH
   NOTE:
   Service the RH side in the same procedure as the LH side.
9. Disconnection of front stabilizer link ASSY LH (Refer to FP - 8)
10. Disconnection of front stabilizer link ASSY RH
    NOTE:
    Service the RH side in the same procedure as the LH side.
11. Removal of flexible draw stiffener ASSY (tS model) (Refer to FP - 32)
12. Removal of sub frame COMPL LH (Refer to FP - 22)
13. Removal of sub frame COMPL RH
    NOTE:
    Service the RH side in the same procedure as the LH side.
14. Removal of steering gear ASSY (Refer to SL - 6)

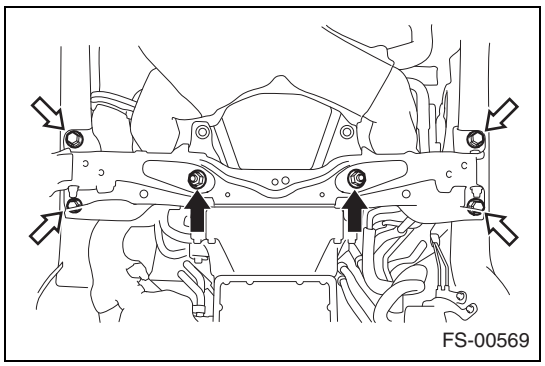

15. Removal of front crossmember SUB-ASSY
    (1) Remove the 2 nuts from the front crossmember SUB-ASSY.
    (2) Remove the four bolts, and remove the front crossmember SUB-ASSY.

Captions in illustration

➡	Nut
⇨	Bolt

FP

Installation

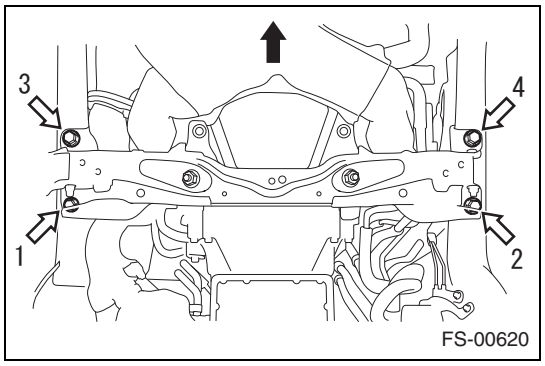

1. Installation of front crossmember SUB-ASSY
   (1) Install four new bolts in the order shown in the figure to temporarily install the front crossmember SUB-ASSY.

Captions in illustration

➡	Front of vehicle
⇨	Bolt

   (2) Temporarily attach two new nuts to the front crossmember SUB-ASSY.
   (3) Fully tighten the four bolts.
   Standard value:T=95N·m {969kgf·cm} {70.1 ft·lbf}
   (4) Fully tighten the two nuts.
   Standard value:T=60N·m {612kgf·cm} {44.3ft·lbf}

2. Adjustment of shift lever position (automatic transmission)
   CAUTION:
   If the mounting bolts of the front crossmember SUB-ASSY have become even slightly loose, check the adjustment of the shift lever. (Refer to AT - 208)
3. Installation of steering gear ASSY (Refer to SL - 14)
4. Installation of sub frame COMPL LH (Refer to FP - 24)
5. Installation of sub frame COMPL RH
   NOTE:
   Service the RH side in the same procedure as the LH side.
6. Installation of flexible draw stiffener ASSY (tS model) (Refer to FP - 33)
7. Installation of front stabilizer link ASSY LH (Refer to FP - 24)
8. Installation of front stabilizer link ASSY RH
   NOTE:
   Service the RH side in the same procedure as the LH side.
9. Installation of front suspension lower arm ASSY LH (Refer to FP - 18)
10. Installation of front suspension lower arm ASSY RH
    NOTE:
    Service the RH side in the same procedure as the LH side.
11. Installation of undercover front side rear LH
    (1) Install the undercover front side rear LH with the three clips.
12. Installation of undercover front side rear RH
    NOTE:
    Service the RH side in the same procedure as the LH side.
13. Installation of under cover rear LH (Refer to EM - 87)
14. Installation of under cover COMPL T/M (Refer to IE - 46)
15. Installation of undercover front AL (Refer to IE - 46)
16. Removal of engine hanger (Refer to EM - 87)
17. Inspection and adjustment of front wheel alignment (Refer to AL - 2)
18. Initialization of head light leveling computer (refer to LE - 38)
19. Headlight beam adjustment (Refer to LE - 51)
20. VDC sensor mid point setting (Refer to BC - 15)

Flexible draw stiffener (tS model)

Exploded view

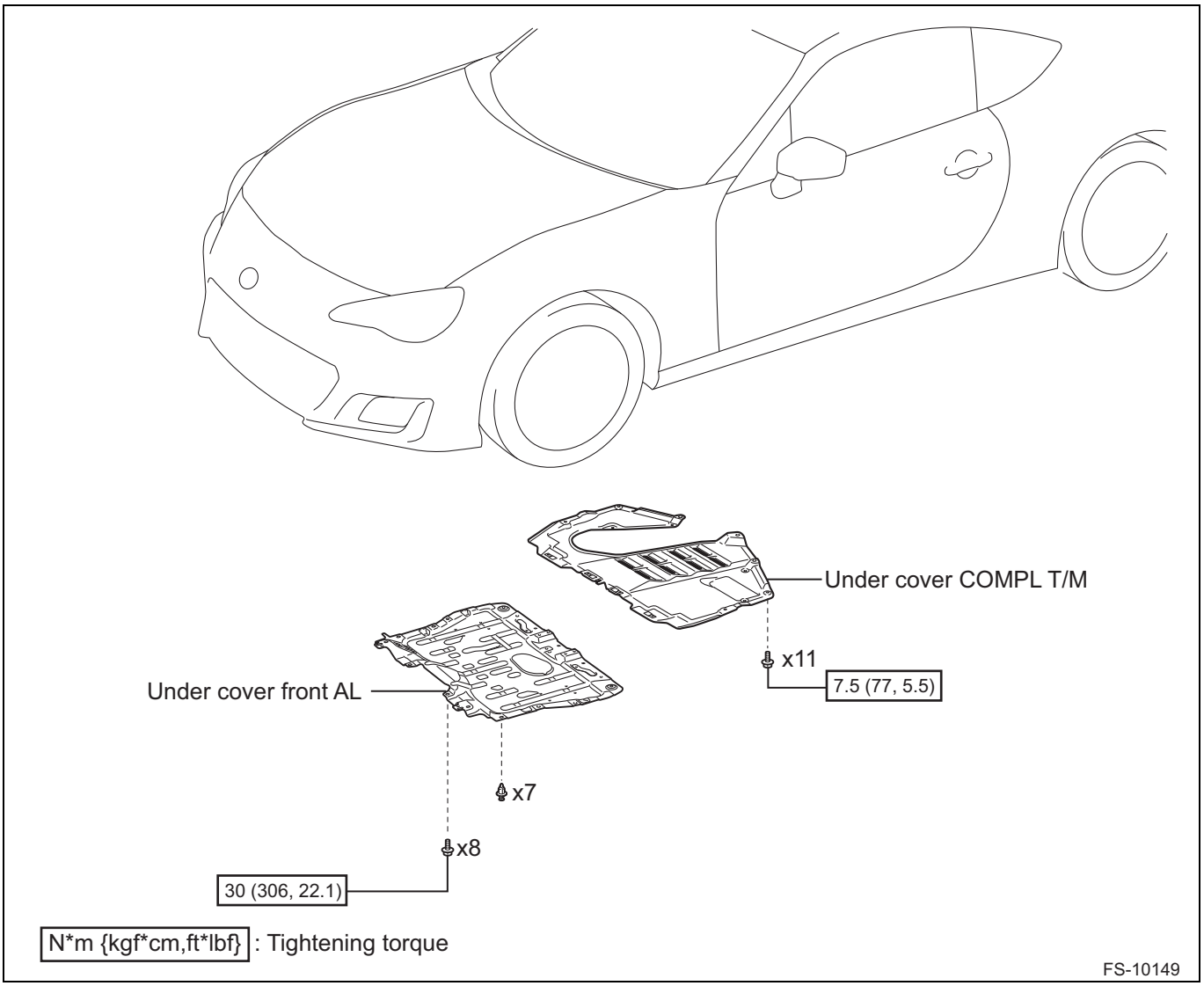

tS model

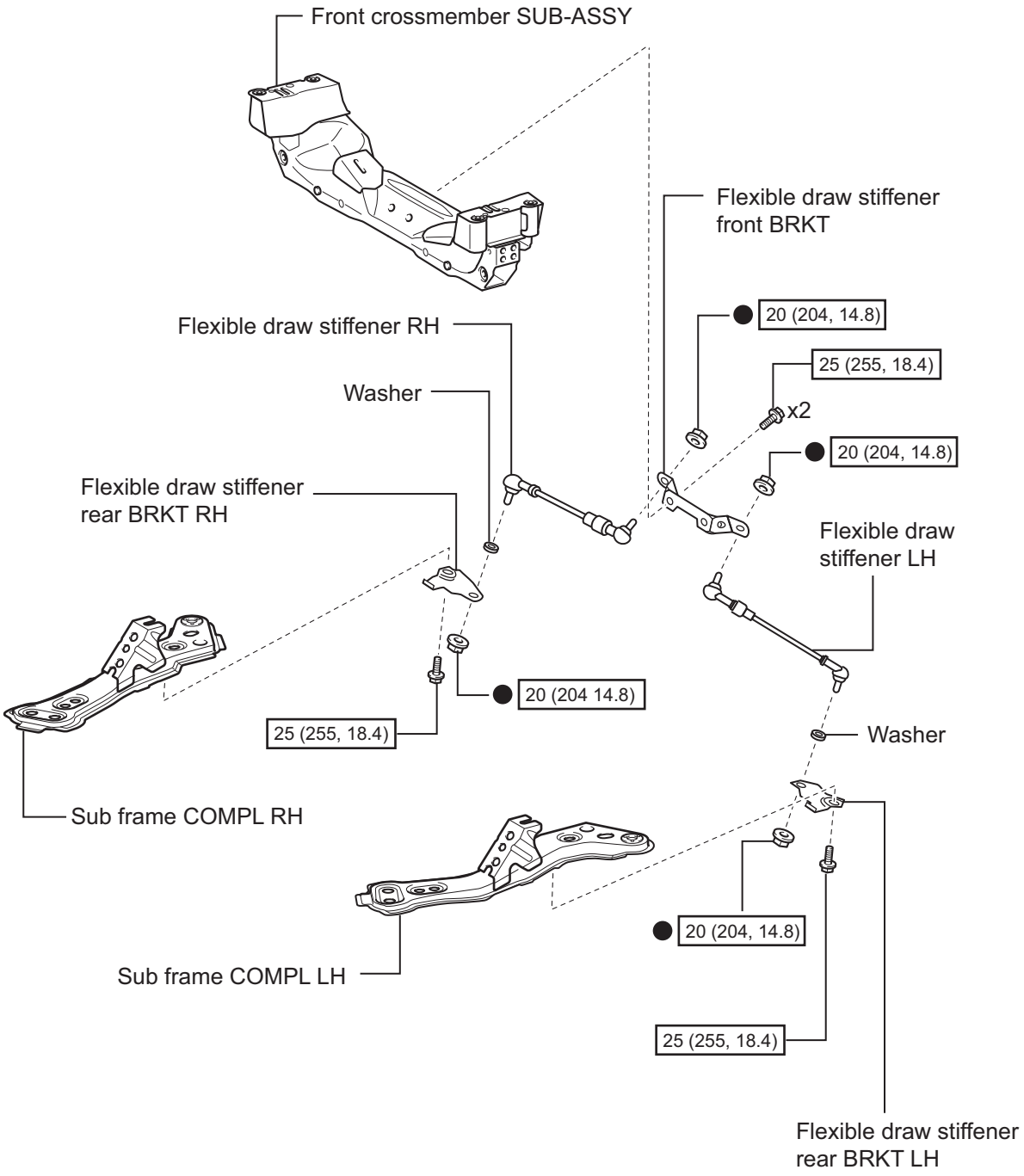

N*m {kgf*cm,ft*lbf} : Tightening torque

● Non-reusable parts

FS-10139

Removal

1. Removal of undercover front AL (Refer to IE - 39)
2. Removal of undercover COMPL T/M (Refer to IE - 40)

FP

3. Removal of flexible draw stiffener ASSY

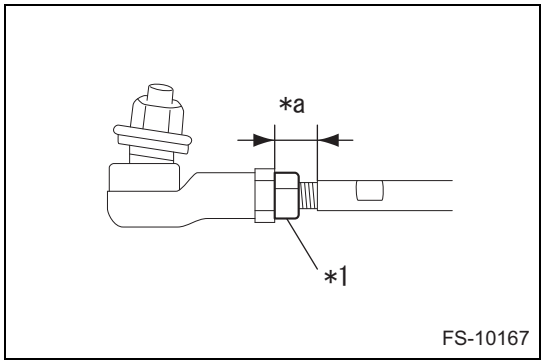

(1) Loosen the lock nut, rotate the rod so that the rod enters into the housing body, and adjust the threaded part to the dimension shown in the figure.

Captions in illustration

*1	Lock nut
*a	14±1.0mm {0.5512±0.0394in}

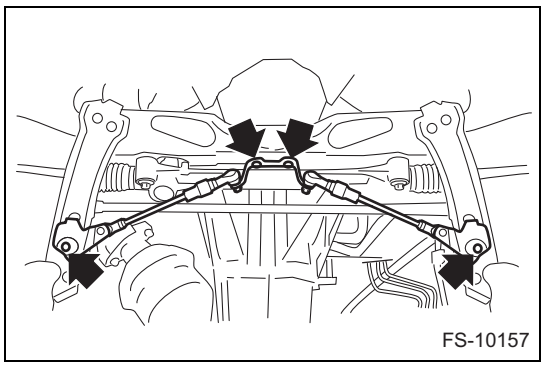

(2) Remove the bolts and then remove the flexible draw stiffener ASSY.

Disassembly

1. Removal of flexible draw stiffener LH

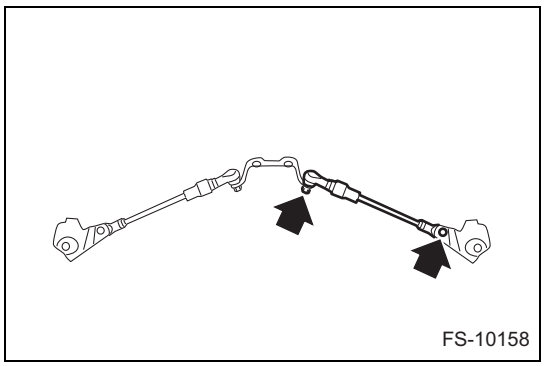

(1) Remove the nuts and then remove the flexible draw stiffener LH.
CAUTION:
Be careful not to damage the boot portion of the ball joint. When the boot portion is damaged, replace the flexible draw stiffener LH with a new part.

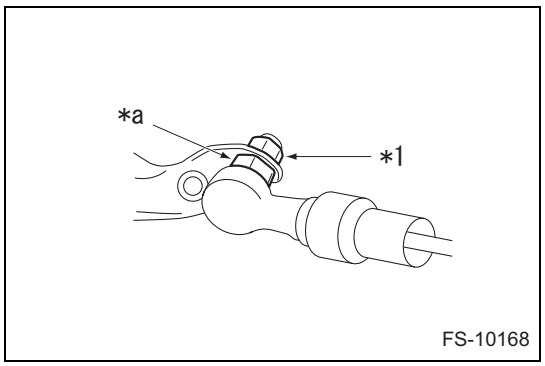

Captions in illustration

*1	Nut
*a	Hold

2. Removal of flexible draw stiffener RH
NOTE:
Perform the same removal procedures for the RH side.

Assembly

1. Adjustment of flexible draw stiffener total-length
   (1) Rotate the rod, and adjust the distance between the ball studs to the dimension shown in the figure.

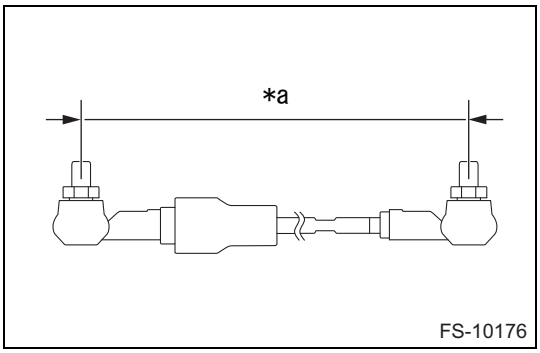

Captions in illustration

*a	293±1.0 mm {11.5354±0.0394 in}

2. Assembly of flexible draw stiffener LH
   (1) Prepare a new nut, and install the flexible draw stiffener.
   CAUTION:
   When installing a new flexible draw stiffener, do not remove the βpin until the new flexible draw stiffener is installed on the vehicle body. Always remove the βpin after installing the flexible draw stiffener on the vehicle body.
   Standard value:T=20N·m {204kgf·cm} {14.8 ft·lbf}

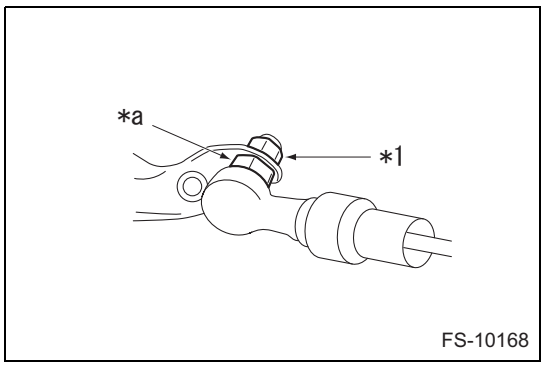

Captions in illustration

*1	Nut
*a	Hold

3. Assembly of flexible draw stiffener RH
   NOTE:
   Perform the same installation procedures for the RH side.

Installation

1. Installation of flexible draw stiffener ASSY
   (1) Install the flexible draw stiffener ASSY with the bolts.
   Standard value:T=25N·m {255kgf·cm} {18.4 ft·lbf}
   (2) When using a new flexible draw stiffener.
   (a)Remove the βpin.
   NOTE:
   Dispose the removed βpin.
   (3) When reusing the flexible draw stiffener.
   (a)Rotate the rod so that the rod hole aligns with the housing end surface.

FP

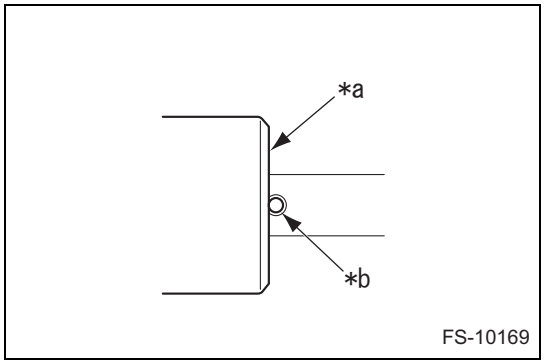

Captions in illustration

*a	Housing end face
*b	Rod hole end

(4) Tighten the lock nut.
Standard value:T=10N·m {102kgf·cm} {7.4 ft·lbf}

2. Installation of undercover COMPL T/M (Refer to IE - 46)
3. Installation of undercover front AL (Refer to IE - 46)

Rear suspension

Rear suspension system
Symptom table RP-2

Rear shock absorber
Exploded view RP-3
Removal RP-6
Disassembly RP-7
Inspection RP-8
Assembly RP-8
Installation RP-10
Disposal RP-11

Rear upper arm
Exploded view RP-13
Removal RP-13
Inspection RP-14
Installation RP-14

Rear lower arm
Exploded view RP-15
Removal RP-16
Disassembly RP-17
Assembly RP-17
Installation RP-18

Toe control link
Exploded view RP-20
Removal RP-20
Disassembly RP-22
Inspection RP-22
Assembly RP-23
Installation RP-23

Rear stabilizer bar
Exploded view RP-25
Removal RP-25
Inspection RP-26
Installation RP-27

Rear suspension member
Exploded view RP-29
Removal RP-33
Installation RP-37

Rear suspension system

Symptom table

NOTE:

Use the following table to identify the trouble cause. Check each part, and repair or replace it if necessary.

Rear suspension system

Symptoms	Inspection items	Reference pages
Poor stability of vehicle	Tires (improper pressure, uneven wear)	TW - 2
	Rear wheel alignment	AL - 7
	Hub bearings	AD - 17
	Rear shock absorber w/ coil spring	RP - 8
Vehicle bottoms out	Vehicle (excessive weight)	-
	Rear shock absorber w/ coil spring	RP - 8
Vehicle experiences abnormal vibration or tilting	Tires (improper pressure, uneven wear)	TW - 2
	Stabilizer bar	RP - 26
	Rear shock absorber w/ coil spring	RP - 8
Abnormal rear wheel vibration	Tires (improper pressure, uneven wear)	TW - 2
	Wheels (out of balance)	TW - 2
	Rear wheel alignment	AL - 7
	Rear suspension arm ASSY No. 1	RP - 16
	Rear suspension arm ASSY No. 2	RP - 16
	Upper control arm ASSY No. 1	RP - 14
	Rear shock absorber w/ coil spring	RP - 8
	Hub bearings	AD - 17
Abnormal tire wear	Tires (improper pressure, uneven wear)	TW - 2
	Wheels (out of balance)	TW - 2
	Rear wheel alignment	AL - 7

Rear shock absorber

Exploded view

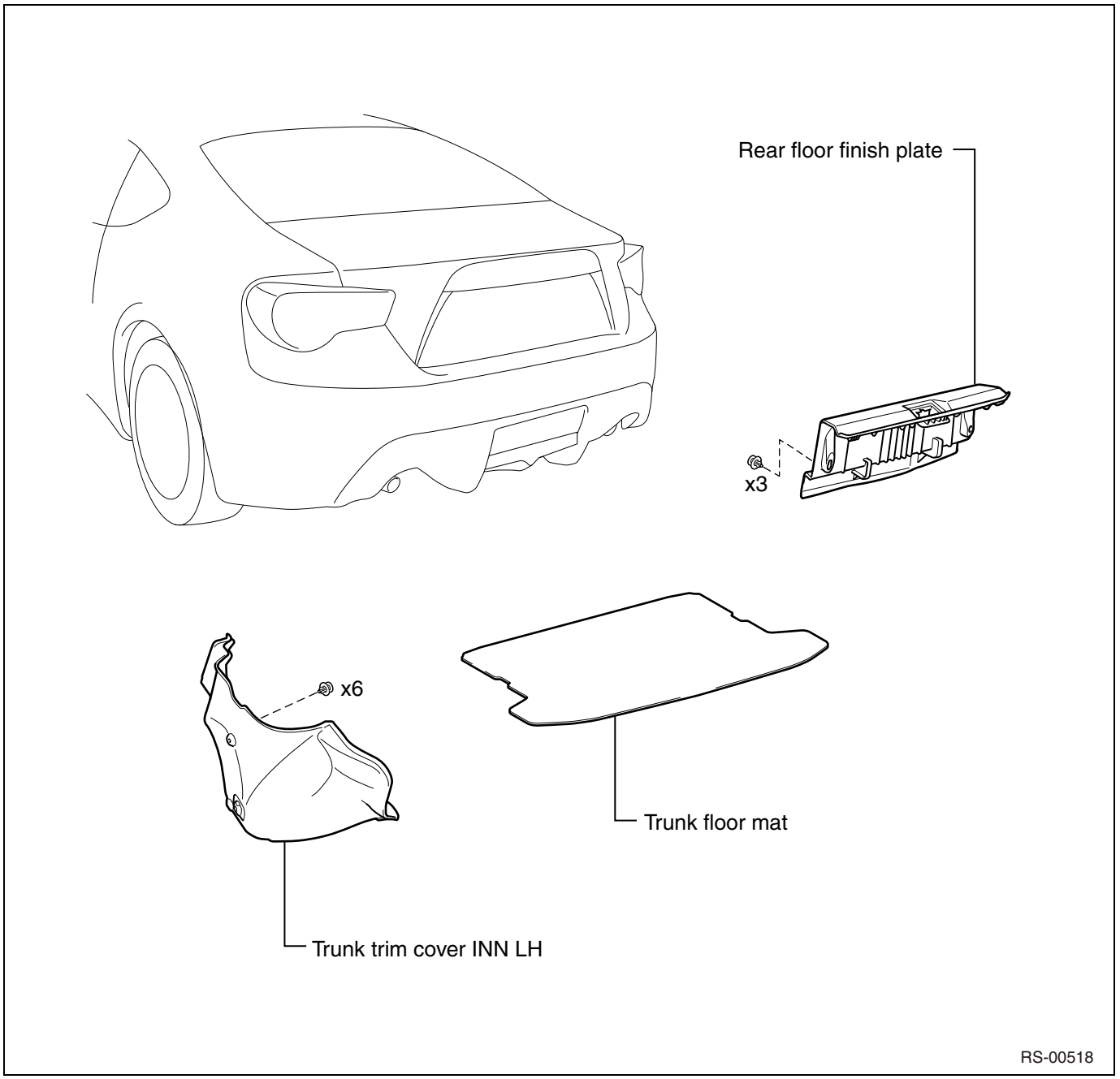

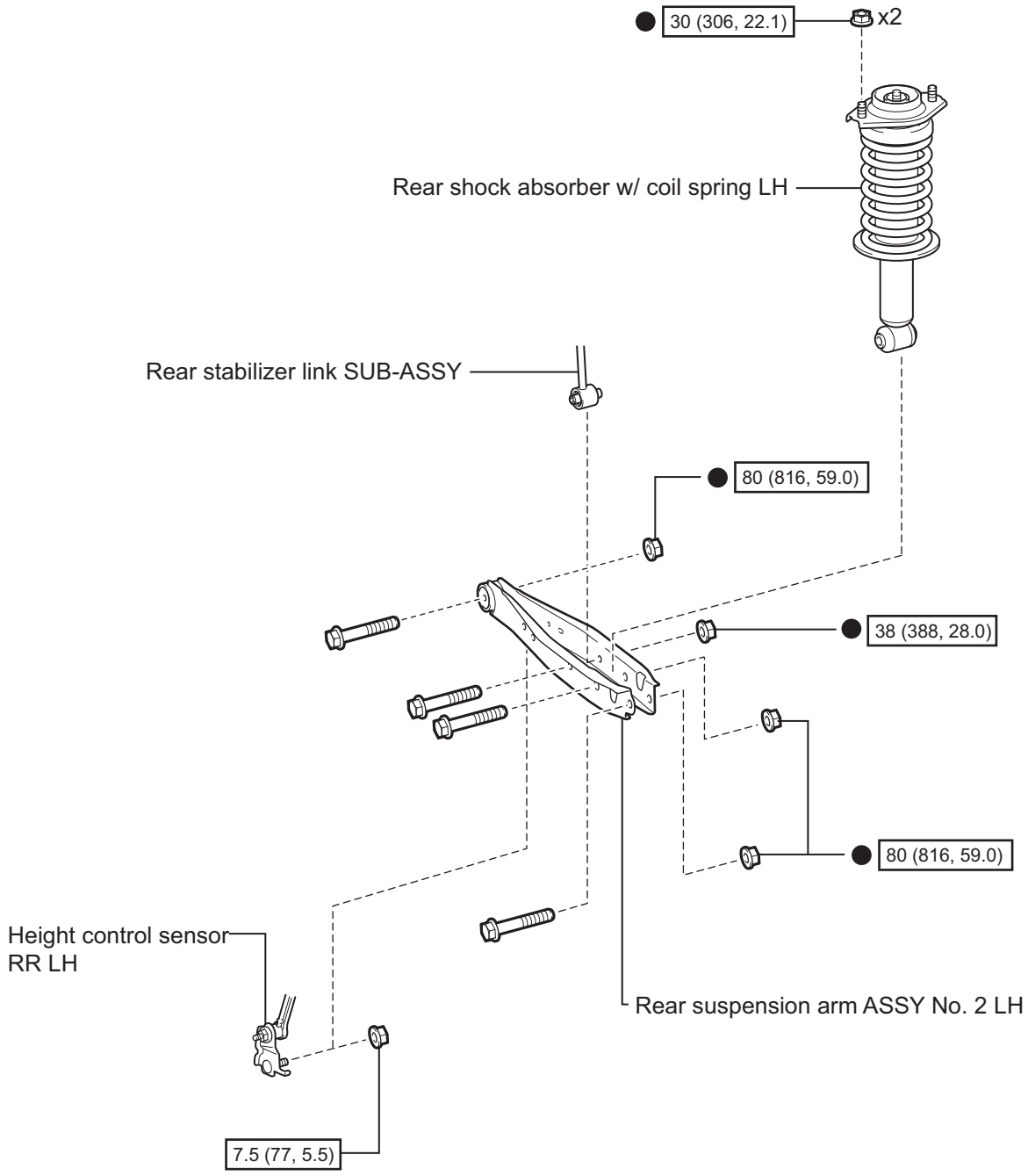

N*m {kgf*cm, ft*lbf} : Tightening torque ● Non-reusable part

RS-10019

RP

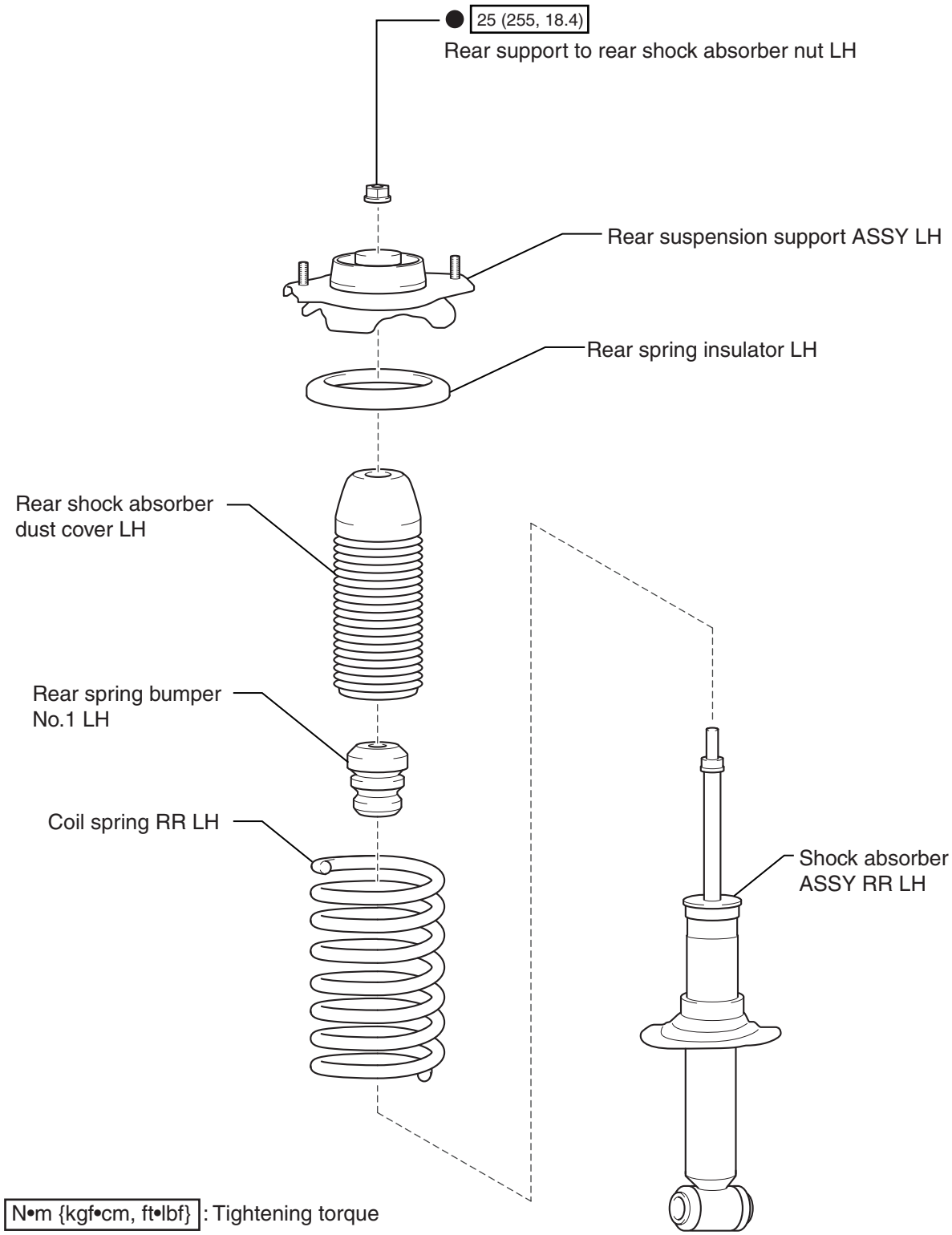
● 25 (255, 18.4)
Rear support to rear shock absorber nut LH
Rear suspension support ASSY LH
Rear spring insulator LH
Rear shock absorber dust cover LH
Rear spring bumper No.1 LH
Coil spring RR LH
Shock absorber ASSY RR LH
N•m {kgf•cm, ft•lbf} : Tightening torque
● Non-reusable parts

RS-00504

RP

Removal

NOTE:

- The following procedure is for LH side.
- Service the LH side and the RH side using the same procedure.

1. Removal of the trunk floor mat
2. Removal of the rear floor finish plate (Refer to LE - 61)
3. Removal of the trunk trim cover INN LH (Refer to LE - 62)
4. Removal of rear tire
5. Removal of height control sensor RR LH (Refer to LE - 83)

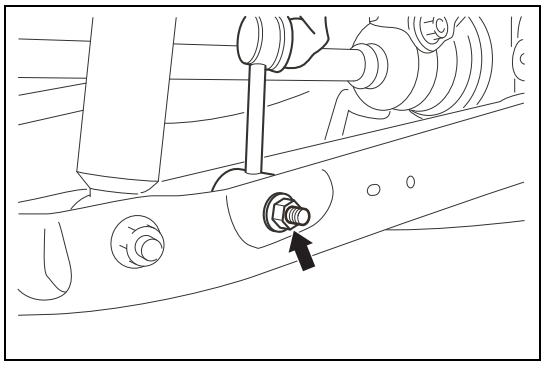

6. Disconnection of rear stabilizer link SUB-ASSY (installed on LH side)
   (1) Remove the bolt and nut, and disconnect the rear stabilizer link SUB-ASSY from the rear suspension arm ASSY No. 2 LH.

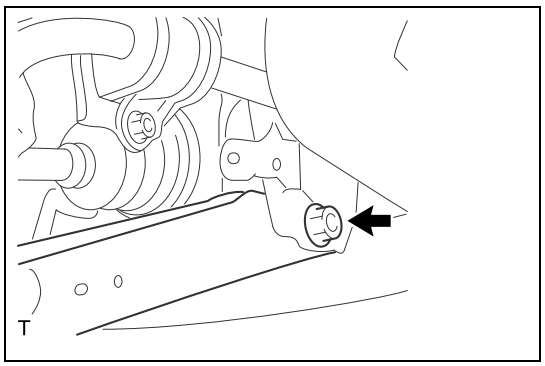

7. Disconnection of rear suspension arm ASSY No. 2 LH
   (1) Loosen the mounting nut of the rear suspension arm ASSY No. 2 LH and the rear suspension member SUB-ASSY.
   CAUTION:
   Loosen, but do not remove the nut.

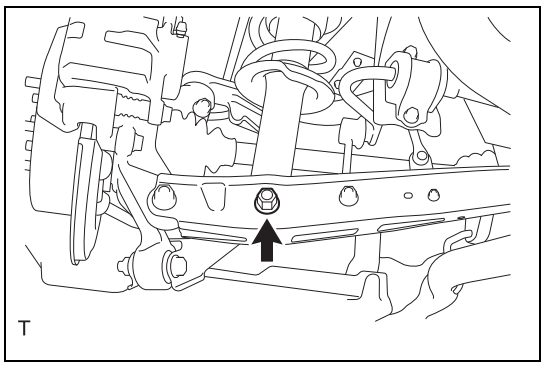

   (2) Remove the bolt and nut, and disconnect the rear shock absorber w/ coil spring LH from the rear suspension arm ASSY No. 2 LH.

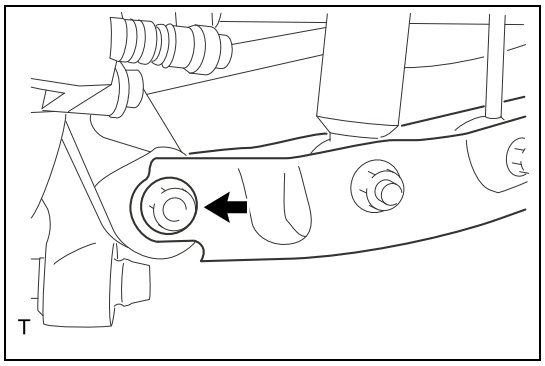

   (3) Remove the bolt and nut, and disconnect the rear axle carrier LH from the rear suspension arm ASSY No. 2 LH.

RP

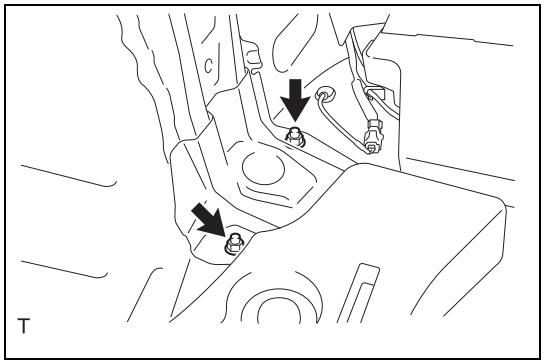

8. Removal of rear shock absorber w/ coil spring LH
   (1) Remove the two nuts, and remove the rear shock absorber w/ coil spring LH from the vehicle.
   CAUTION:
   Hold the rear shock absorber w/ coil spring LH to prevent it from falling.

Disassembly

NOTE:

- The following procedure is for LH side.
- Service the LH side and the RH side using the same procedure.

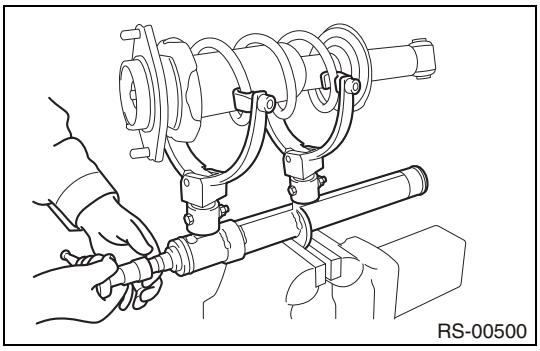

1. Removal of rear support to rear shock absorber nut LH
   (1) Secure a spring compressor in a vise.
   (2) Place the hooks of the spring compressor arms across the diameter of the coil spring RR LH.
   WARNING:
   - Make sure that the upper and lower hooks of the spring compressor are placed as far from each other as possible on the coil spring RR LH.
   - Make sure that the claws of the hooks are securely in place.

   (3) Using the spring compressor, compress the coil spring RR LH.
   WARNING:
   - If the coil spring RR LH becomes curved like a bow during the compression process, stop the procedure immediately, and remove and reconnect the spring compressor.
   - Do not compress to the point where parts of the coil spring touch each other.
   - Do not use an impact wrench.

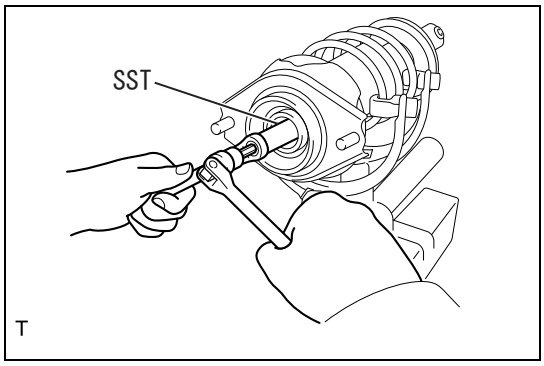

   (4) After making sure that the coil spring RR LH is free, place the SST on the rear support to rear shock absorber nut LH. Secure the piston rod of the rear shock absorber ASSY using a deep socket hexagon, and remove the rear support to rear shock absorber nut LH.
   WARNING:
   Do not remove the rear support to rear shock absorber nut LH without the coil spring RR LH being free.
   CAUTION:
   - Be careful not to damage or deform the threaded portion.
   - Fully insert the deep socket hexagon.

   SST 20399FG000

2. Removal of rear suspension support ASSY LH
   (1) Remove the rear suspension support ASSY LH from the shock absorber ASSY RR LH.
3. Removal of rear spring insulator LH
   (1) Remove the rear spring insulator LH from the rear suspension support ASSY LH.
4. Removal of coil spring RR LH
   (1) After removing the coil spring RR LH from the shock absorber ASSY RR LH, release the spring compressor and remove the coil spring RR LH.
   CAUTION:
   Do not use an impact wrench.
5. Removal of rear shock absorber dust cover LH
   (1) Remove the rear shock absorber dust cover LH from the shock absorber ASSY RR LH.

6. Removal of rear spring bumper No. 1 LH
   (1) Remove the rear spring bumper No. 1 LH from the shock absorber ASSY RR LH.

Inspection

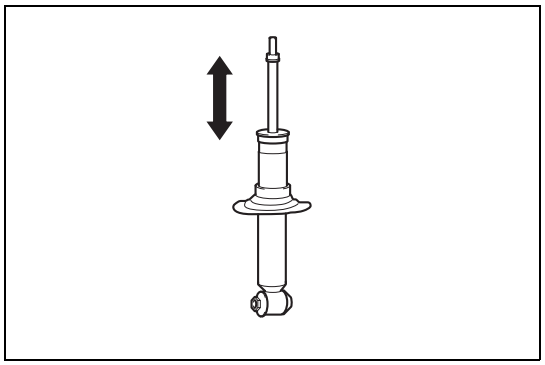

1. Inspection of shock absorber ASSY RR LH
   (1) Operation inspection of shock absorber ASSY RR LH
      (a) Inspect the shock absorber ASSY RR LH by compressing it.
         Criteria: When it is compressed at a certain speed, the heaviness of each stroke is consistent, and it does not make any abnormal movement or sound. Also, when it extends, it returns to its original length at a consistent speed.

Assembly

NOTE:

- The following procedure is for LH side.
- Service the LH side and the RH side using the same procedure.

1. Installation of rear spring bumper No. 1 LH
   (1) Install the rear spring bumper No. 1 LH on the shock absorber ASSY RR LH.
2. Installation of rear shock absorber dust cover LH
   (1) Install the rear shock absorber dust cover LH on the shock absorber ASSY RR.

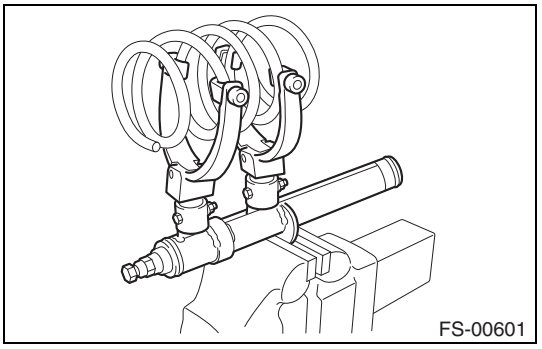

3. Installation of coil spring RR LH
   (1) Secure a spring compressor in a vise.

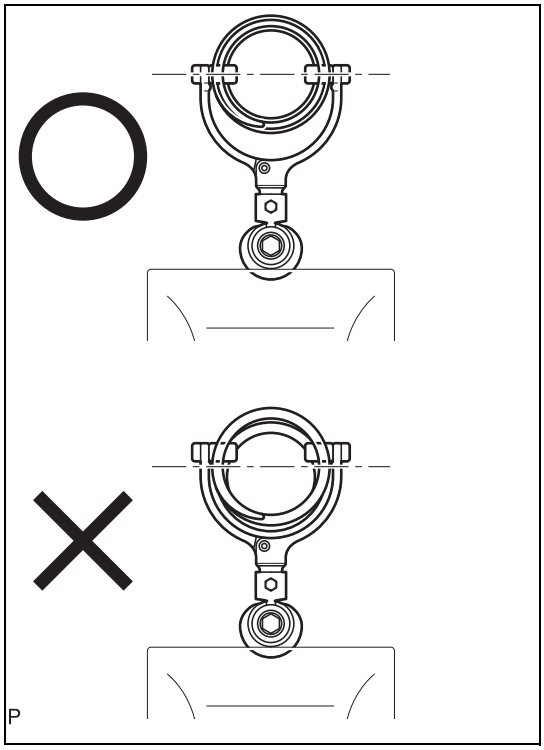

(2) Place the hooks of the spring compressor across the diameter of the coil spring RR LH.
WARNING:
- Make sure that the upper and lower hooks of the spring compressor are placed as far from each other as possible on the coil spring RR LH.
- Make sure that the claws of the hooks are securely in place.

(3) Using the spring compressor, compress the coil spring RR LH.
WARNING:
- If the coil spring RR LH becomes curved like a bow during the compression process, stop the procedure immediately, and remove and reconnect the spring compressor.
- Do not compress to the point where parts of the coil spring touch each other.
- Do not use an impact wrench.

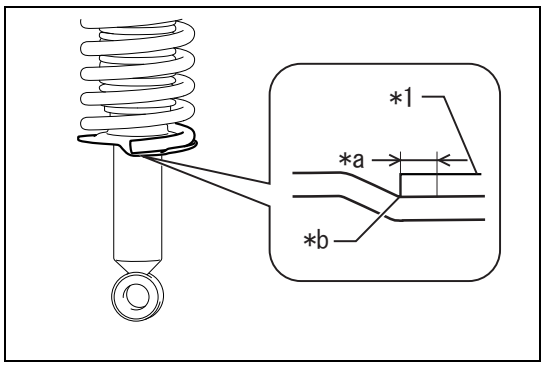

(4) Set the coil spring RR LH so that the end surface of the spring seats well in the stopper section of the lower spring seat.

Captions in illustration

*1	Coil spring RR LH
*a	0 to 10mm {0 to 0.394in}
*b	Stopper section of spring seat

4. Installation of rear spring insulator LH
   (1) Install the rear spring insulator LH on the coil spring RR LH.
5. Installation of rear suspension support ASSY LH
   (1) Install the rear suspension support ASSY LH on the shock absorber ASSY RR LH.

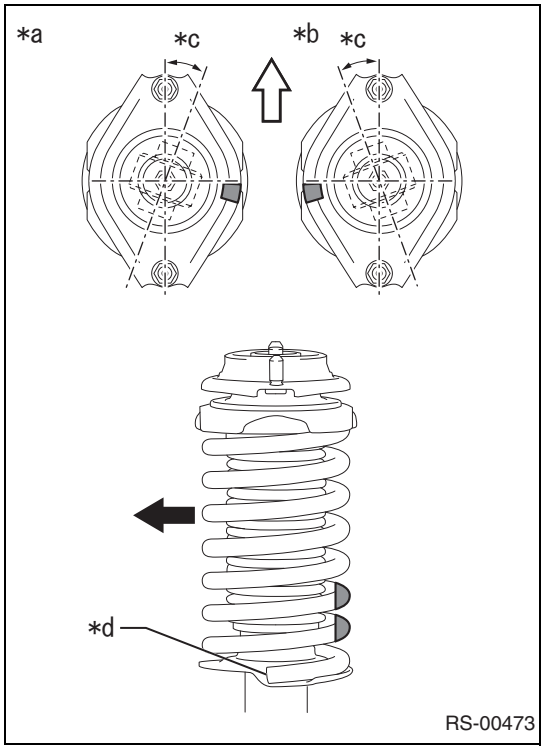

6. Installation of rear support to rear shock absorber nut LH
   (1) Temporarily tighten the new rear support to rear shock absorber nut LH.

Captions in illustration

*a	LH side
*b	RH side
*c	10±5°
*d	End section of coil spring RR LH
➡	Vehicle outside
⇨	Front of vehicle

   (2) Adjust the rear suspension support ASSY LH so that the position of the stud is as shown in the figure.
   CAUTION:
   Adjust the coil spring RR LH and RH with the end section facing the rear of the vehicle on the LH side and the front of the vehicle on the RH side.
   (3) Remove the spring compressor from the coil spring RR LH.
   CAUTION:
   - Do not use an impact wrench.
   - While checking the position of the rear suspension support ASSY LH, remove the spring compressor.

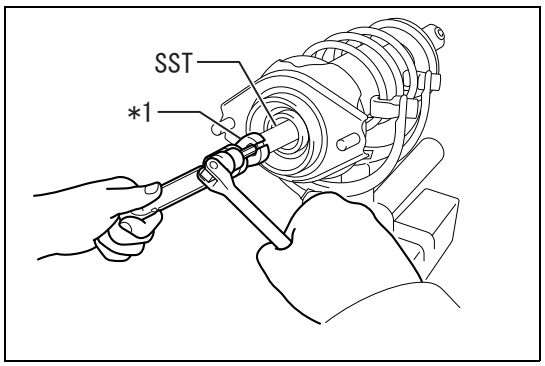

   (4) Set the SST on the rear support to rear shock absorber nut LH. Secure the piston rod of the rear shock absorber ASSY using a deep socket hexagon, and fully tighten the rear support to rear shock absorber nut LH with a crow foot wrench.

Captions in illustration

*1	Crowfoot wrench

   SST 20399FG000
   Standard value:T=25N·m {255kgf·cm} {18.4ft·lbf}
   CAUTION:
   - When extending the overall tool length by combining a torque wrench with the crow foot wrench during tightening, tightening to the point where the value on the torque wrench reaches the specified tightening torque will cause the actual tightening torque to be excessive. (Refer to IN - 6)
   - Be careful not to damage or deform the threaded portion.
   - Fully insert the deep socket hexagon.

RP

Installation

NOTE:
- The following procedure is for LH side.
- Service the LH side and the RH side using the same procedure.

1. Installation of rear shock absorber w/ coil spring LH
   (1) Insert the rear shock absorber w/ coil spring LH into the vehicle.
   (2) Using two new nuts, install the rear shock absorber w/ coil spring LH.
   Standard value:T=30N·m {306kgf·cm} {22.1ft·lbf}
2. Temporary tightening of rear suspension arm ASSY No. 2 LH
   (1) Replace the mounting nut of the rear suspension arm ASSY No. 2 LH and the rear suspension member ASSY with a new nut and temporarily tighten it.
   (2) Install the rear suspension arm ASSY No. 2 LH to the axle carrier, and temporarily tighten it with the bolt and a new nut.

CAUTION:
Insert the bolt from the front of the vehicle.

(3) Install the rear shock absorber w/ coil spring LH to the rear suspension arm ASSY No. 2 LH, and temporarily tighten it with the bolt and a new nut.
NOTE:
The bolt may be inserted from either side.

3. Temporary tightening of rear stabilizer link SUB-ASSY (installed on LH side)
   (1) Install the rear stabilizer link SUB-ASSY to the rear suspension arm ASSY No. 2 LH, and temporarily tighten it with the bolt and a new nut.

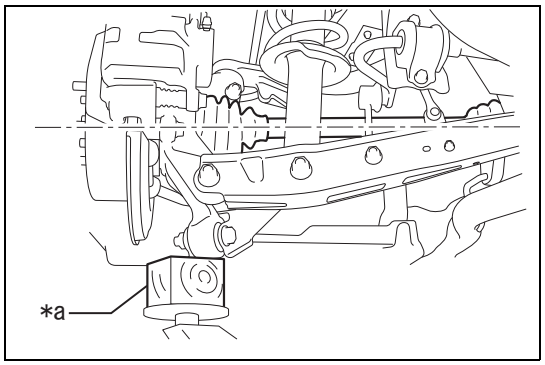

4. Stabilization of vehicle
   (1) Jack up the axle carrier by placing a wooden block between them, and apply a load to the suspension so that the rear drive shaft ASSY LH becomes level.

Captions in illustration

*a	Wooden block

5. Final tightening of rear suspension arm ASSY No. 2 LH
   (1) Fully tighten the mounting nut of the rear suspension arm ASSY No. 2 LH and the rear axle carrier LH.
   Standard value:T=80N·m {816kgf·cm} {59.0ft·lbf}
   (2) Fully tighten the mounting nut of the rear shock absorber w/ coil spring LH and the rear suspension arm ASSY No. 2 LH.
   Standard value:T=80N·m {816kgf·cm} {59.0ft·lbf}
   (3) Fully tighten the mounting nut of the rear suspension arm ASSY No. 2 LH and the rear suspension member ASSY.
   Standard value:T=80N·m {816kgf·cm} {59.0ft·lbf}
6. Final tightening of rear stabilizer link SUB-ASSY (installed on LH side)
   (1) Fully tighten the mounting nut of the rear stabilizer link SUB-ASSY and the rear suspension arm ASSY No. 2 LH.
   Standard value:T=38N·m {388kgf·cm} {28.0ft·lbf}
7. Installation of height control sensor RR LH (Refer to LE - 83)
8. Installation of rear tire
   Standard value:T=120N·m {1224kgf·cm} {88.5ft·lbf}
9. Installation of the trunk trim cover INN LH (Refer to LE - 63)
10. Installation of the rear floor finish plate (Refer to LE - 63)
11. Installation of the trunk floor mat
12. Inspection and adjustment of rear wheel alignment (Refer to AL - 7)
13. Initialization of head light leveling computer (refer to LE - 38)
14. Headlight beam adjustment (Refer to LE - 51)
15. VDC sensor mid point setting (Refer to BC - 15)

RP

Disposal

1. Disposal of shock absorber ASSY RR LH
   (1) Secure the shock absorber ASSY RR LH in a vertical position.
   (2) Press down on the piston rod with hands by approximately 60 mm {2.362 in}.

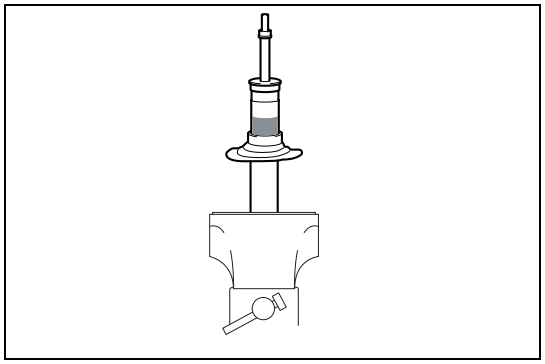

(3) Using a saw, etc., slowly make a hole in the section shown in the figure to purge the gas.

Captions in illustration

	Range to be bored

CAUTION:
- Wear protective eye wear.
- Since the gas pressure may spray metal chips, perform the procedure by covering the saw with a piece of cloth, etc.

NOTE:
Gas to be released is colorless, odorless, and harmless.

Rear upper arm

Exploded view

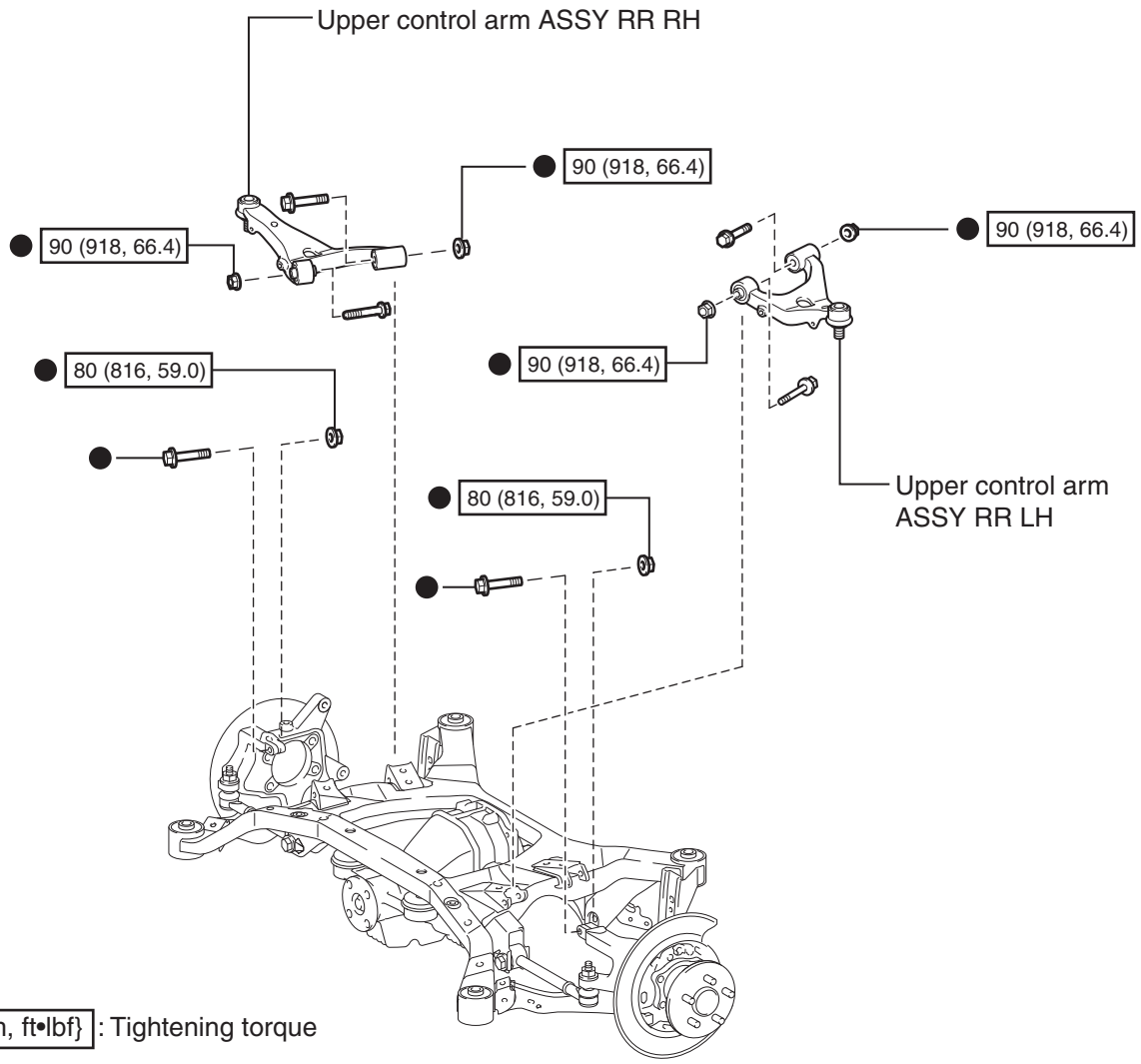

Removal

1. Removal of rear suspension member SUB-ASSY (Refer to RP - 33)

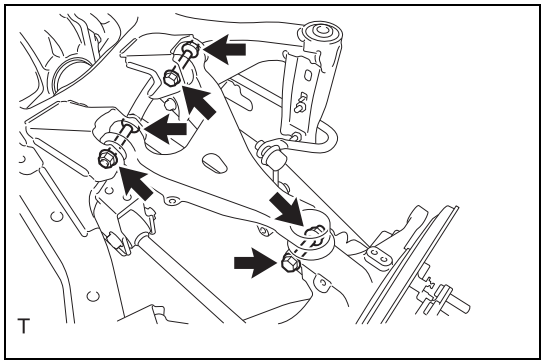

2. Removal of upper control arm ASSY RR LH
   (1) Remove the three bolts and three nuts, and remove the upper control arm ASSY RR LH.

3. Removal of upper control arm ASSY RR RH
   NOTE:
   Service the RH side in the same procedure as the LH side.

Inspection

1. Inspection of upper control arm ASSY RR LH
   (1) Inspection of ball joint
      (a)Vibrate and turn the stud.
         Criteria: There is no abnormal interference or play during vibration and turning.
      (b)If there is abnormal interference or play during vibration and turning, replace the upper control arm ASSY RR LH.
   (2) Dust cover inspection
      (a)Check the dust cover for cracks or grease leakage.
      (b)If there are cracks or grease leakage on the dust cover, replace the upper control arm ASSY RR LH.

Installation

1. Temporary tightening of upper control arm ASSY RR LH
   (1) Install the upper control arm ASSY RR LH to the rear suspension member SUB-ASSY, and temporarily tighten it with the two bolts and two new nuts.
      CAUTION:
      - Insert the front bolt from the rear of the vehicle.
      - Insert the rear bolt from the front of the vehicle.
   (2) Insert the stud of the upper control arm ASSY RR LH to the rear axle carrier LH, and temporarily tighten it with a new bolt and nut.
      CAUTION:
      Insert the bolt from the front of the vehicle.
2. Temporary tightening of upper control arm ASSY RR RH
   NOTE:
   Service the RH side in the same procedure as the LH side.
3. Installation of rear suspension member SUB-ASSY (Refer to RP - 37)
4. Stabilization of vehicle (Refer to RP - 11)
5. Final tightening of upper control arm ASSY RR LH
   (1) Fully tighten the mounting nut and bolt of the upper control arm ASSY RR LH and the rear axle carrier LH.
      Standard value:T=80N·m {816kgf·cm} {59.0ft·lbf}
   (2) Fully tighten the two mounting nuts and two bolts of the upper control arm ASSY RR LH and the rear suspension member SUB-ASSY.
      Standard value:T=90N·m {918kgf·cm} {66.4ft·lbf}
6. Final tightening of upper control arm ASSY RR RH
   NOTE:
   Service the RH side in the same procedure as the LH side.

Rear lower arm

Exploded view

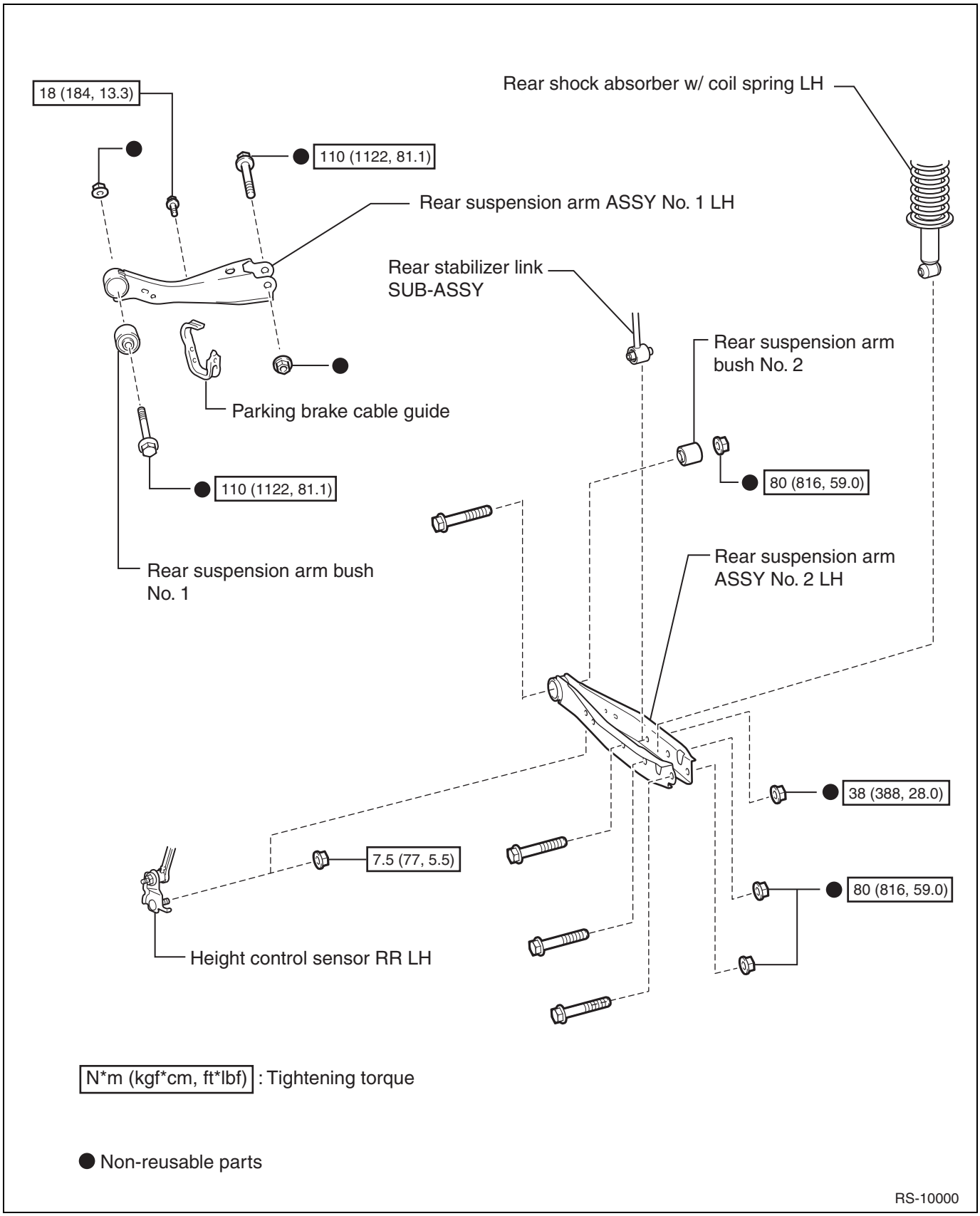

RP

Removal

NOTE:

- The following procedure is for LH side.
- Service the LH side and the RH side using the same procedure.

1. Removal of rear tire

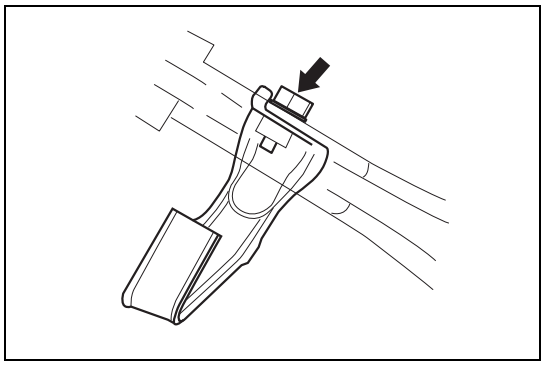

2. Removal of parking brake cable guide
   (1) Remove the bolt, and remove the parking brake cable guide.

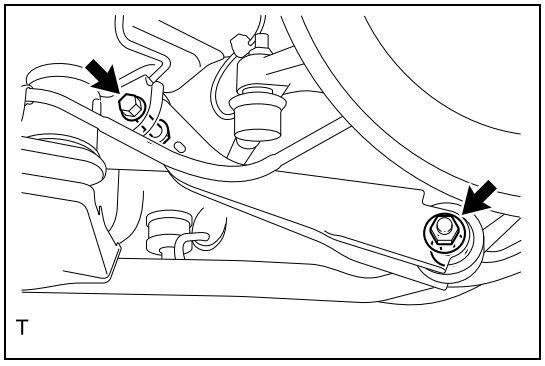

3. Removal of rear suspension arm ASSY No. 1 LH
   (1) Remove the two bolts and two nuts, and remove the rear suspension arm ASSY No. 1 LH.

4. Removal of height control sensor RR LH (Refer to LE - 83)
5. Disconnection of rear stabilizer link SUB-ASSY (installed on LH side) (Refer to RP - 6)

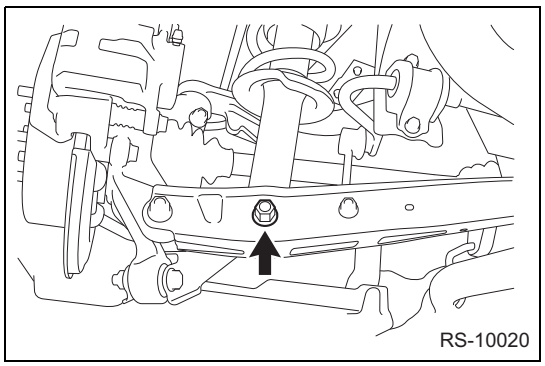

6. Disconnection of rear shock absorber w/ coil spring LH
   (1) Remove the bolt and nut, and disconnect the rear shock absorber w/ coil spring LH from the rear suspension arm ASSY No. 2 LH.

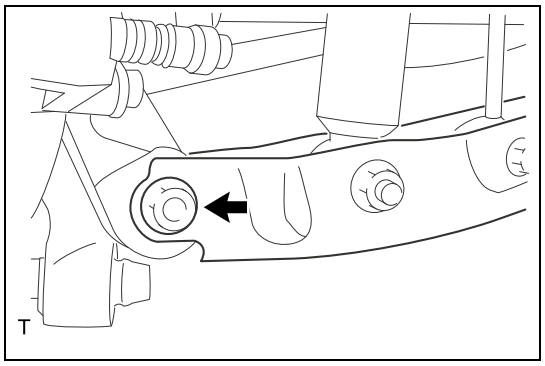

7. Removal of rear suspension arm ASSY No. 2 LH
   (1) Remove the bolt and nut, and disconnect the rear axle carrier LH from the rear suspension arm ASSY No. 2 LH.

RP

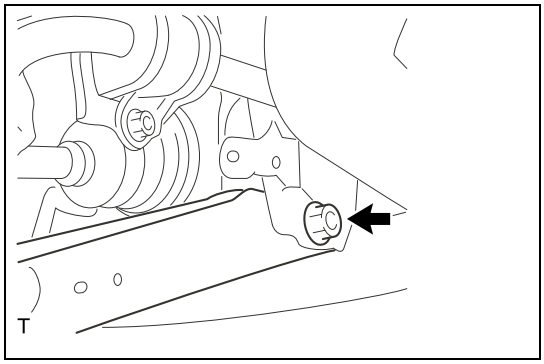

(2) Remove the bolt and nut, and remove the rear suspension arm ASSY No. 2 LH from the rear suspension member SUB-ASSY.

Disassembly

NOTE:

- The following procedure is for LH side.
- Service the LH side and the RH side using the same procedure.

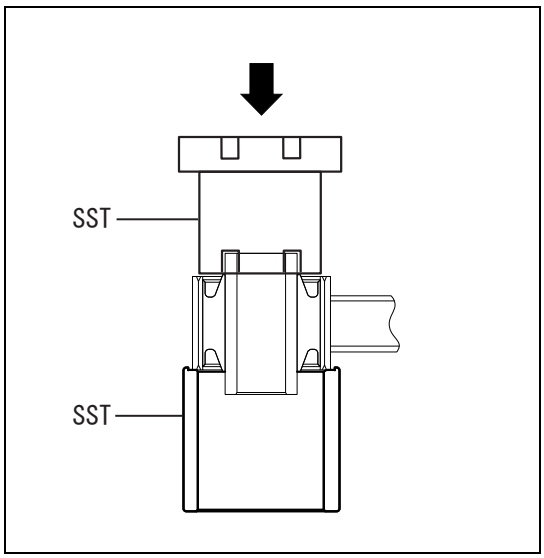

1. Removal of rear suspension arm bushing No. 1
   (1) Using the SSTs and a press, remove the rear suspension arm bushing No. 1 from the rear suspension arm ASSY No. 1 LH.
   SST 20099PA010, 20099FG000

Captions in illustration

➡	Pressing direction

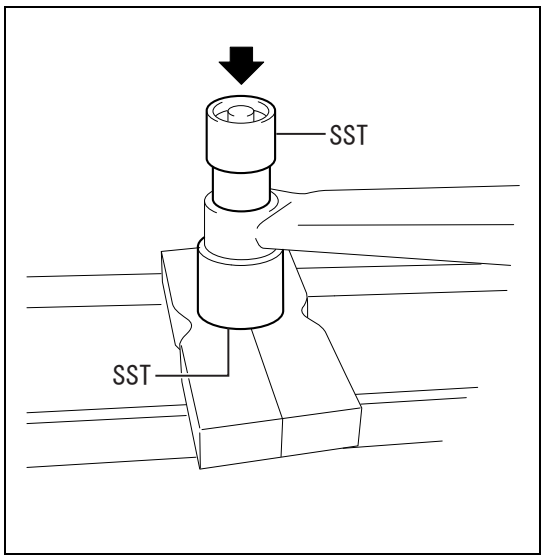

2. Removal of rear suspension arm bushing No. 2
   (1) Using the SSTs and a press, remove the rear suspension arm bushing No. 2 from the rear suspension arm ASSY No. 2 LH.
   SST 20099AE010

Captions in illustration

➡	Pressing direction

RP

Assembly

NOTE:

- The following procedure is for LH side.
- Service the LH side and the RH side using the same procedure.

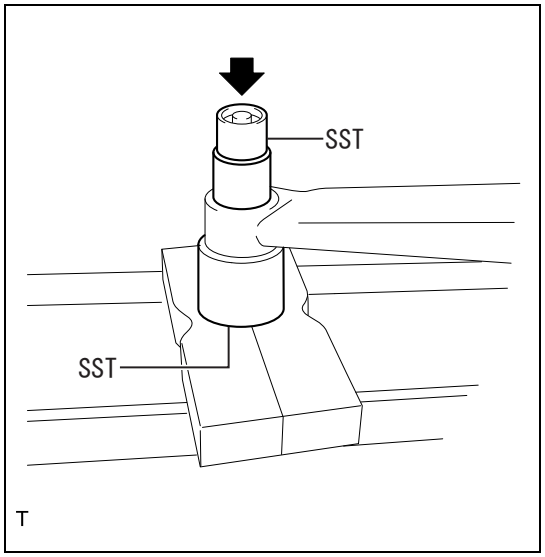

1. Installation of rear suspension arm bushing No. 2
   (1) Using the SSTs and a press, install the rear suspension arm bushing No. 2 into the rear suspension arm ASSY No. 2 LH.
   SST 20099AE010

Captions in illustration

➡	Pressing direction

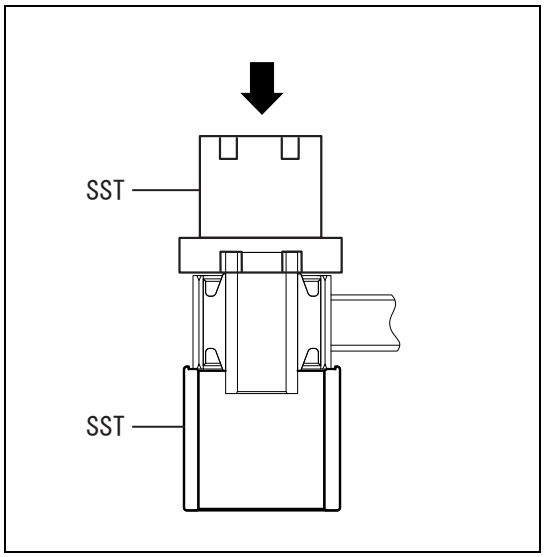

2. Installation of rear suspension arm bushing No. 1
   (1) Using the SSTs and a press, install the rear suspension arm bushing No. 1 into the rear suspension arm ASSY No. 1 LH.
   SST 20099PA010, 20099FG000

Captions in illustration

➡	Pressing direction

Installation

NOTE:

- The following procedure is for LH side.
- Service the LH side and the RH side using the same procedure.

RP

1. Temporary tightening of rear suspension arm ASSY No. 2 LH
   (1) Using the bolt and a new nut, temporarily tighten the rear suspension arm ASSY No. 2 LH to the axle carrier.
   CAUTION:
   Insert the bolt from the front of the vehicle.
   (2) Using the bolt and a new nut, temporarily tighten the rear suspension arm ASSY No. 2 LH to the rear suspension member.
   CAUTION:
   Insert the bolt from the front of the vehicle.
2. Temporary tightening of rear shock absorber w/ coil spring LH
   (1) Using the bolt and a new nut, temporarily tighten the rear suspension arm ASSY No. 2 LH to the rear shock absorber w/ coil spring LH.
   NOTE:
   The bolt may be inserted from either side.
3. Installation of rear stabilizer link SUB-ASSY (installed on LH side) (Refer to RP - 11)
4. Installation of height control sensor RR LH (Refer to LE - 83)

5. Temporary tightening of rear suspension arm ASSY No. 1 LH
   (1) Using a new bolt and nut, temporarily tighten the rear suspension arm ASSY No. 1 LH to the axle carrier.
   CAUTION:
   Insert the bolt from the inner side of the vehicle.
   (2) Using a new bolt and nut, temporarily tighten the rear suspension arm ASSY No. 1 LH to the rear suspension member.
   CAUTION:
   Insert the bolt from the outer side of the vehicle.
6. Stabilization of vehicle (Refer to RP - 11)
7. Final tightening of rear suspension arm ASSY No. 2 LH (Refer to RP - 11)
8. Final tightening of rear suspension arm ASSY No. 1 LH
   (1) Using the two bolts and two nuts, fully tighten the rear suspension arm ASSY No. 1 LH.
   CAUTION:
   Secure the nut and turn the bolt.
   Standard value:T=110N·m {1122kgf·cm} {81.1ft·lbf}
9. Installation of parking brake cable guide
   (1) Using the bolt, install the parking brake cable guide.
   Standard value:T=18N·m {184kgf·cm} {13.3ft·lbf}
10. Installation of rear tire
    Standard value:T=120N·m {1224kgf·cm} {88.5ft·lbf}
11. Inspection and adjustment of rear wheel alignment (Refer to AL - 7)
12. Initialization of head light leveling computer (refer to LE - 38)
13. Headlight beam adjustment (Refer to LE - 51)
14. VDC sensor mid point setting (Refer to BC - 15)

Toe control link

Exploded view

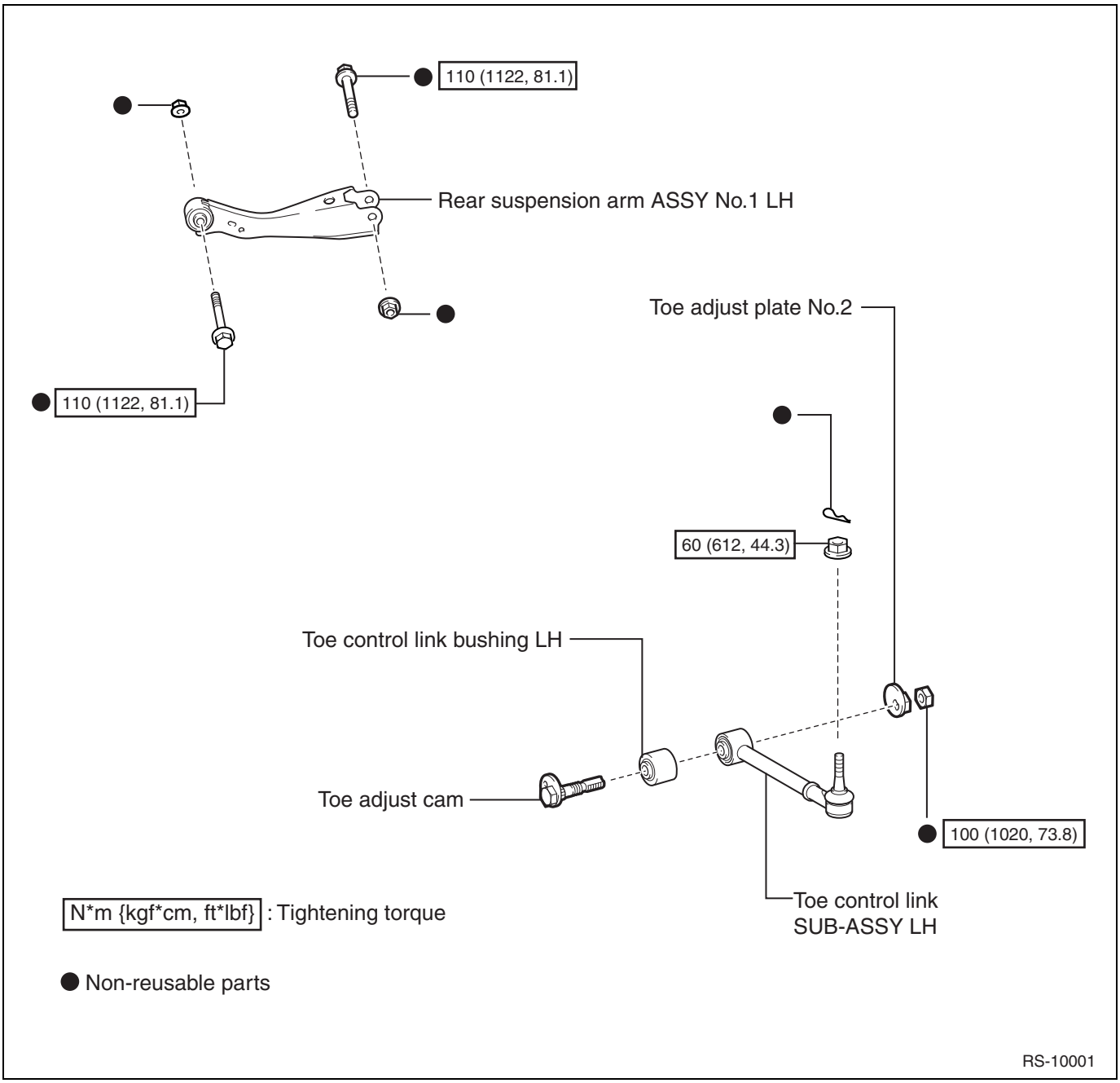

RP

Removal

NOTE:

- The following procedure is for LH side.
- Service the LH side and the RH side using the same procedure.

1. Removal of rear tire
2. Removal of rear suspension arm ASSY No. 1 LH (Refer to RP - 16)

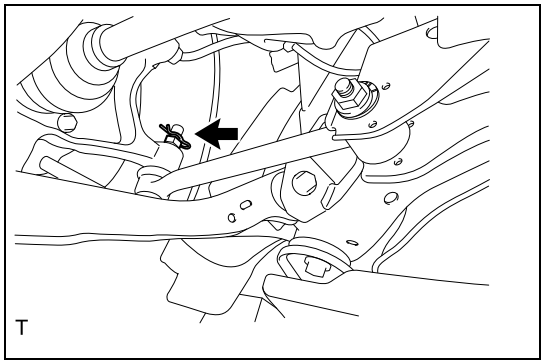

3. Removal of toe control link SUB-ASSY LH
   (1) Remove the snap pin.
   (2) Remove the nut on the axle carrier side.
   (3) Using a tie-rod ball joint puller, disconnect the toe control link SUB-ASSY LH from the rear axle carrier LH.

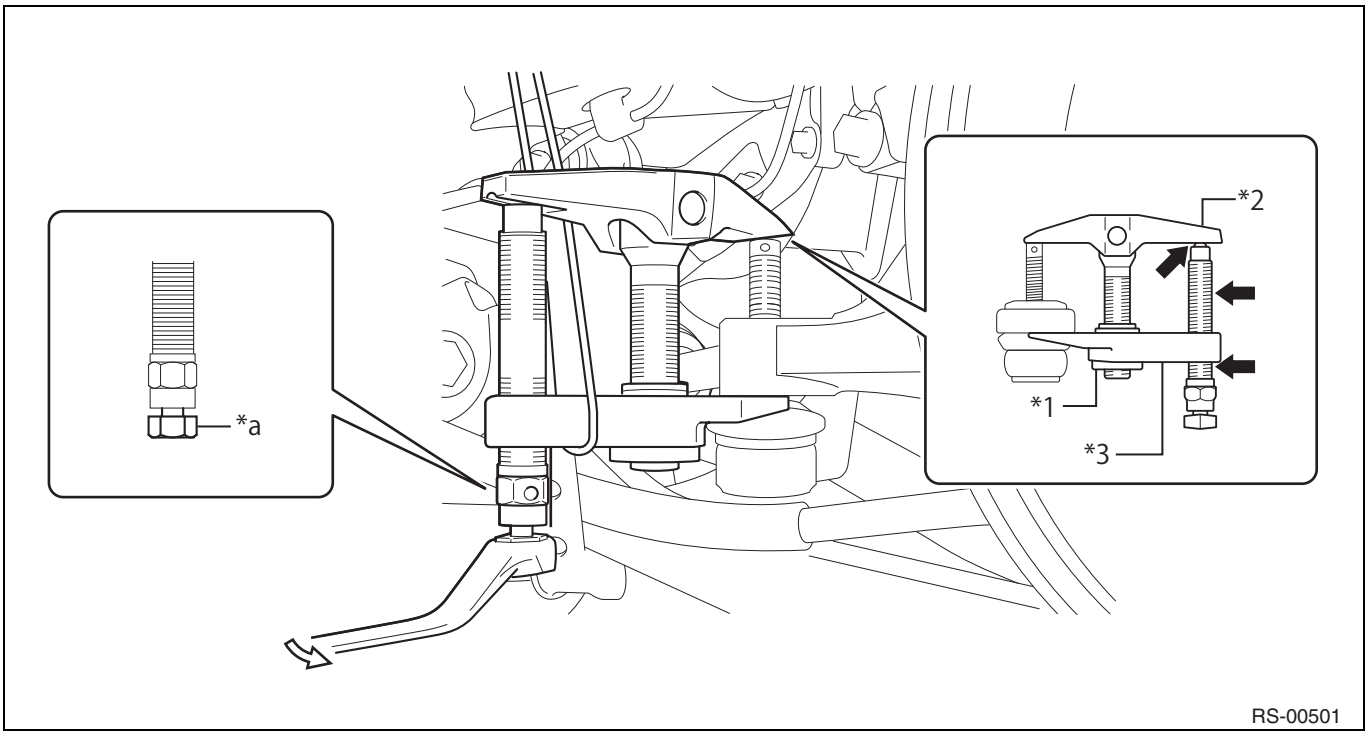

Captions in illustration

*1	Nut	*2	Body
*3	Claw		
*a	Place the wrench here.		
➡	Application area for lubricant	⇨	Direction of rotation

WARNING:
Before starting the work, apply lubricant on the bolt thread and tip of the tie-rod ball joint puller.
CAUTION:
- To prevent damage of the dust cover portion of the toe control link SUB-ASSY, install the tie-rod ball joint puller by adjusting the nut in the center so that the body and the claw become parallel to each other.
- To prevent the tie-rod ball joint puller from falling, be sure to tie its string to the vehicle tightly.
- Do not damage the dust cover portion of the toe control link SUB-ASSY.
- Do not damage the toe control link SUB-ASSY.
- Do not damage the parking brake plate SUB-ASSY.
- Do not damage the rear axle carrier.

(4) Mark an alignment mark on the toe adjust plate No. 2 and the rear suspension member SUB-ASSY.

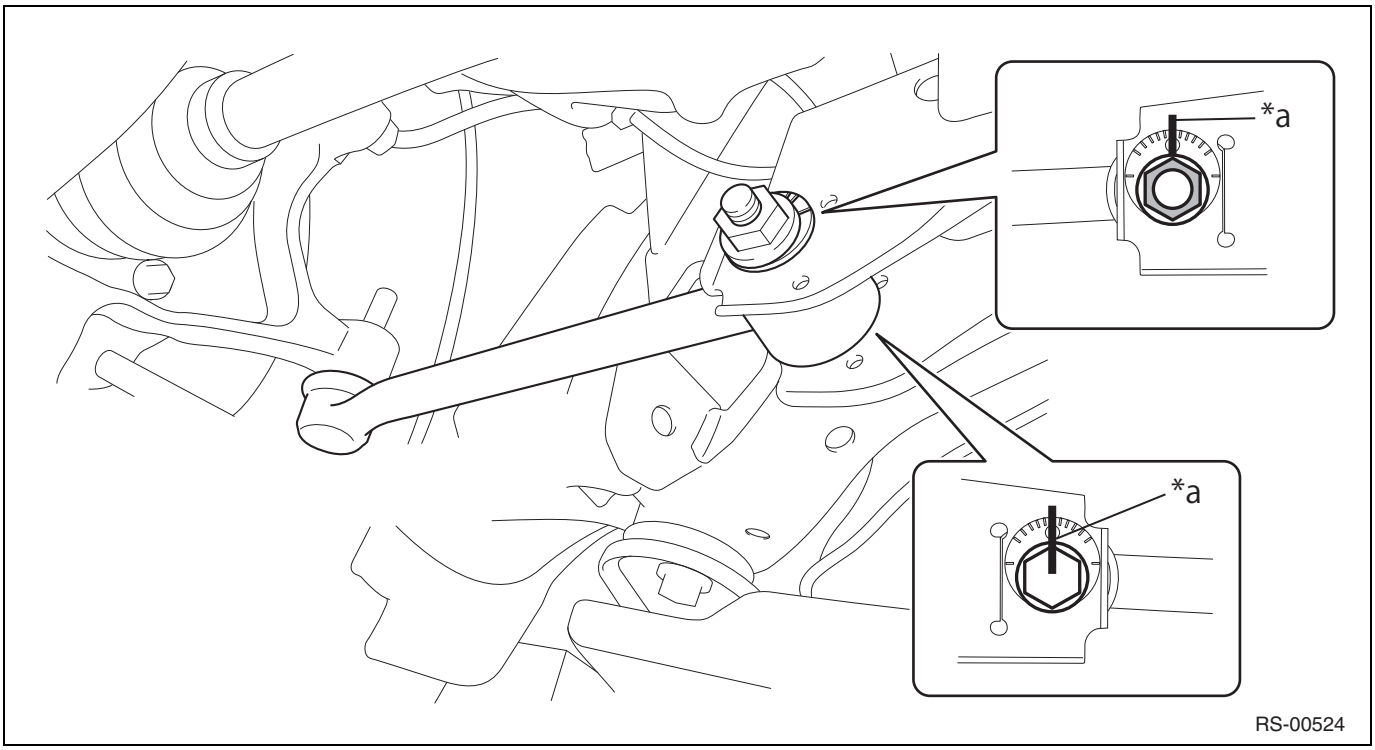

(5) Remove the nut, toe adjust cam, and toe adjust plate No. 2, and remove the toe control link SUB-ASSY LH.

Captions in illustration

*a	Alignment marks	-	-

Disassembly

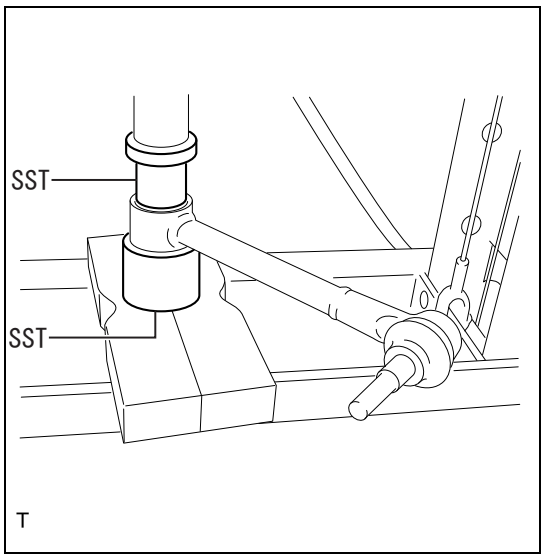

1. Removal of toe control link bushing LH
   (1) Using the SST, remove the toe control link bushing LH from the toe control link SUB-ASSY LH.
   SST 20099AE000

RP

Inspection

1. Inspection of toe control link SUB-ASSY LH
   (1) Inspection of ball joint
      (a)Install the mounting nut on the stud of the toe control link SUB-ASSY LH.

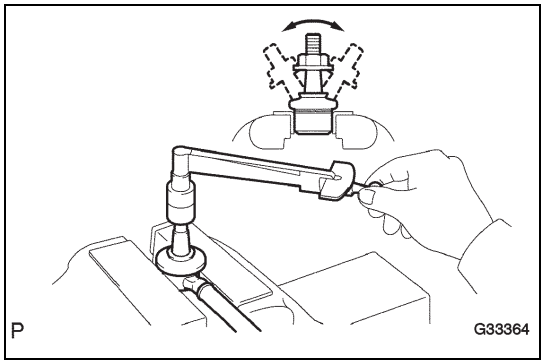

(b)Vibrate and turn the stud.
Criteria: There is no abnormal interference or play during vibration and turning.

(c)If there is abnormal interference or play during vibration and turning, replace the toe control link SUB-ASSY LH.

(2) Dust cover inspection
(a)Check the dust cover for cracks or grease leakage.
(b)If there are cracks or grease leakage on the dust cover, replace the toe control link SUB-ASSY LH.

Assembly

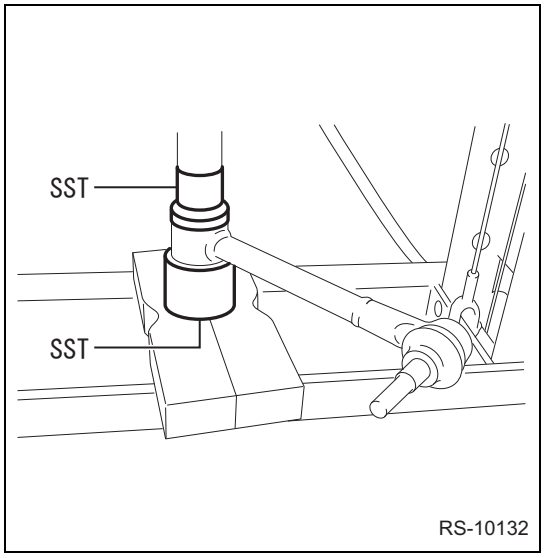

1. Installation of toe control link bushing LH
(1) Using the SST, install the toe control link bushing LH into the toe control link SUB-ASSY LH.
SST 20099AE000

Installation

NOTE:
- The following procedure is for LH side.
- Service the LH side and the RH side using the same procedure.

1. Temporary tightening of toe control link SUB-ASSY LH
(1) After inserting the toe adjust cam from the front of the vehicle, install the toe control link SUB-ASSY LH and temporarily tighten it with the toe adjust plate No. 2 using a new nut.
CAUTION:
Align the alignment marks of the rear suspension member SUB-ASSY and the toe adjust plate No. 2.
(2) Install the toe control link to the axle carrier, and tighten it with the nut.
Standard value:T=60N·m {612kgf·cm} {44.3ft·lbf}
(3) Install a new snap pin.
2. Temporary tightening of rear suspension arm ASSY No. 1 LH (Refer to RP - 19)
3. Stabilization of vehicle (Refer to RP - 11)
4. Final tightening of toe control link SUB-ASSY LH
(1) Fully tighten the nut on the side of the rear suspension member SUB-ASSY.
Standard value:T=100N·m {1020kgf·cm} {73.8ft·lbf}
CAUTION:
Make sure that the alignment marks of the rear suspension member SUB-ASSY and the toe adjust plate No. 2 are aligned.
5. Final tightening of rear suspension arm ASSY No. 1 LH (Refer to RP - 19)

6. Installation of rear tire
   Standard value:T=120N·m {1224kgf·cm} {88.5ft·lbf}
7. Inspection and adjustment of rear wheel alignment (Refer to AL - 7)
8. Initialization of head light leveling computer (refer to LE - 38)
9. Headlight beam adjustment (Refer to LE - 51)
10. VDC sensor mid point setting (Refer to BC - 15)

Rear stabilizer bar

Exploded view

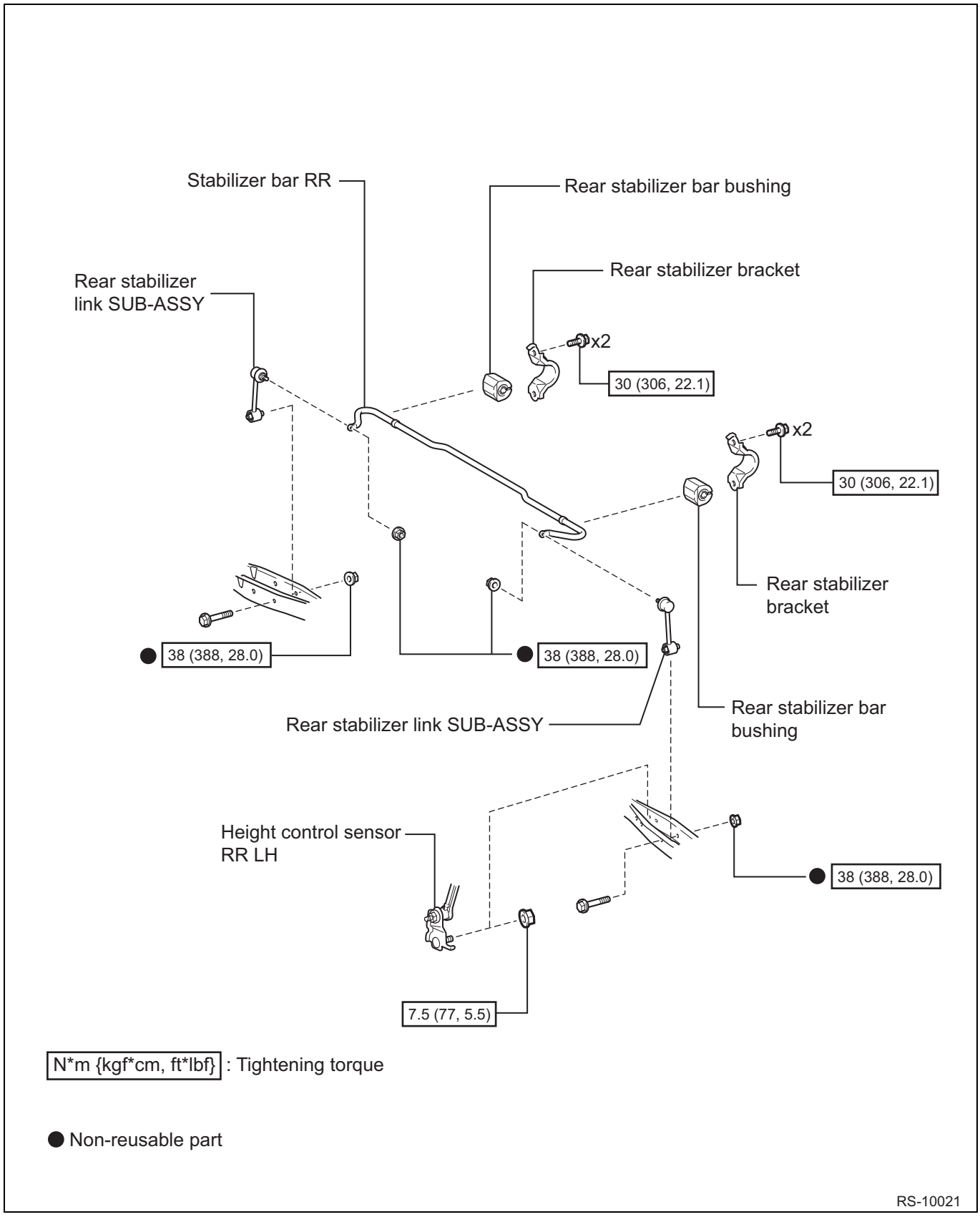

Removal

1. Removal of rear tire

2. Removal of height control sensor RR LH (Refer to LE - 83)

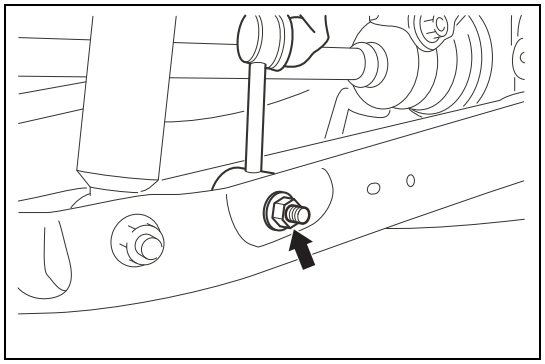

3. Removal of rear stabilizer link SUB-ASSY (installed on LH side)
   (1) Remove the bolt and nut, and disconnect the rear stabilizer link SUB-ASSY from the rear suspension arm ASSY No. 2 LH.

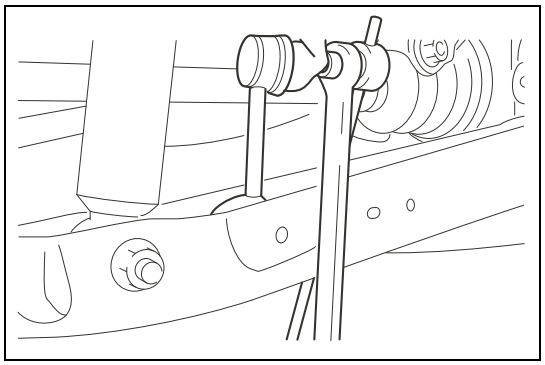

   (2) Secure the stud bolt and remove the nut. Then remove the rear stabilizer link SUB-ASSY from the stabilizer bar RR.

4. Removal of rear stabilizer link SUB-ASSY (installed on RH side)
   NOTE:
   Service the RH side in the same procedure as the LH side.

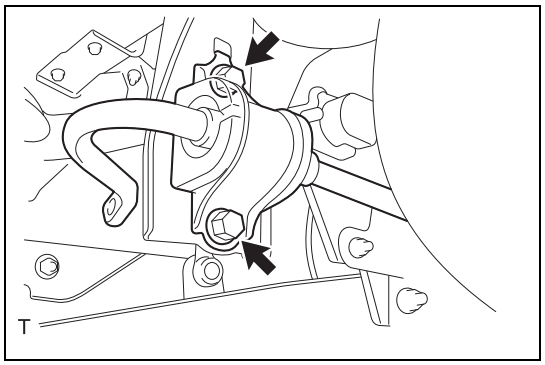

5. Removal of rear stabilizer bracket (installed on LH side)
   (1) Remove the two bolts, and remove the rear stabilizer bracket.

RP

6. Removal of rear stabilizer bracket (installed on RH side)
   NOTE:
   Service the RH side in the same procedure as the LH side.
7. Removal of stabilizer bar RR
   (1) Remove the stabilizer bar RR with the rear stabilizer bar bushing.
8. Removal of rear stabilizer bar bushing (installed on LH side)
   (1) Remove the rear stabilizer bar bushing from the stabilizer bar RR.
9. Removal of rear stabilizer bar bushing (installed on RH side)
   NOTE:
   Service the RH side in the same procedure as the LH side.

Inspection

1. Inspection of rear stabilizer link SUB-ASSY
   (1) Inspection of ball joint
      (a)Install the mounting nut on the stud of the rear stabilizer link SUB-ASSY.

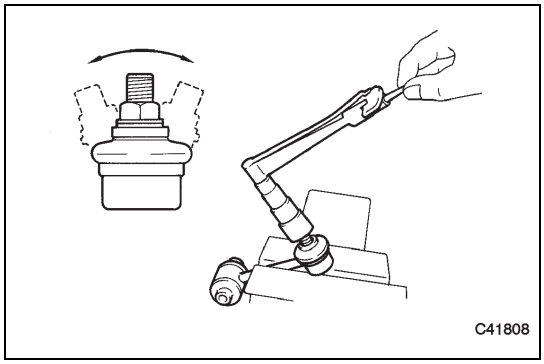

(b)Vibrate and turn the stud.
Criteria: There is no abnormal interference or play during vibration and turning.

(c)If there is abnormal interference or play during vibration and turning, replace the rear stabilizer link SUB-ASSY.

(2) Dust cover inspection
(a)Check the dust cover for cracks or grease leakage.
(b)If there are cracks or grease leakage on the dust cover, replace the rear stabilizer link SUB-ASSY.

Installation

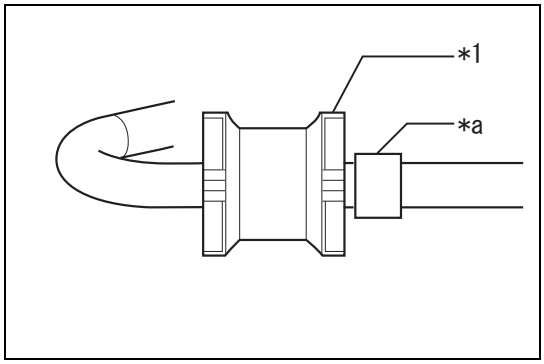

1. Installation of rear stabilizer bar bushing
   (1) Install the rear stabilizer bar bushing on the outer side of the vehicle than the ring section of the stabilizer bar RR.

Captions in illustration

*1	Rear stabilizer bar bushing
*a	Ring section

2. Installation of stabilizer bar RR
   (1) Install the stabilizer bar RR to the rear suspension member SUB-ASSY.

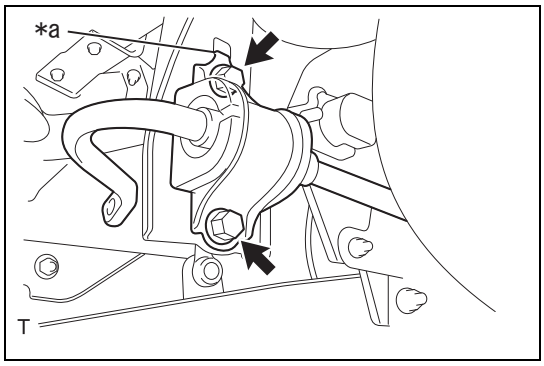

3. Installation of rear stabilizer bracket (installed on LH side)
   (1) Using the two bolts, install the rear stabilizer bracket.
   CAUTION:
   Install so that the claw section of the rear stabilizer bracket faces the top of the vehicle.

Captions in illustration

*a	Claw section

Standard value:T=30N·m {306kgf·cm} {22.1ft·lbf}

4. Installation of rear stabilizer bracket (installed on RH side)
   NOTE:
   Service the RH side in the same procedure as the LH side.
5. Installation of rear stabilizer link SUB-ASSY (installed on LH side)
   (1) Install the rear stabilizer link SUB-ASSY to the stabilizer bar RR.
   (2) Secure the stud bolt and tighten the nut.
   Standard value:T=38N·m {388kgf·cm} {28.0ft·lbf}
   (3) Using the bolt and a new nut, temporarily tighten the rear stabilizer link SUB-ASSY to the rear suspension arm ASSY No. 2 LH.
6. Installation of rear stabilizer link SUB-ASSY (installed on RH side)
   NOTE:
   Service the RH side in the same procedure as the LH side.

RP

7. Final tightening of rear stabilizer link SUB-ASSY (installed on LH side)
   (1) Using the bolt and nut, fully tighten the rear stabilizer link SUB-ASSY to the rear suspension arm ASSY No. 2 LH.
   Standard value:T=38N·m {388kgf·cm} {28.0ft·lbf}
8. Final tightening of rear stabilizer link SUB-ASSY (installed on RH side)
   NOTE:
   Service the RH side in the same procedure as the LH side.
9. Installation of height control sensor RR LH (Refer to LE - 83)
10. Installation of rear tire
    Standard value:T=120N·m {1224kgf·cm} {88.5ft·lbf}
11. Initialization of head light leveling computer (refer to LE - 38)
12. Headlight beam adjustment (Refer to LE - 51)
13. VDC sensor mid point setting (Refer to BC - 15)

Rear suspension member

Exploded view

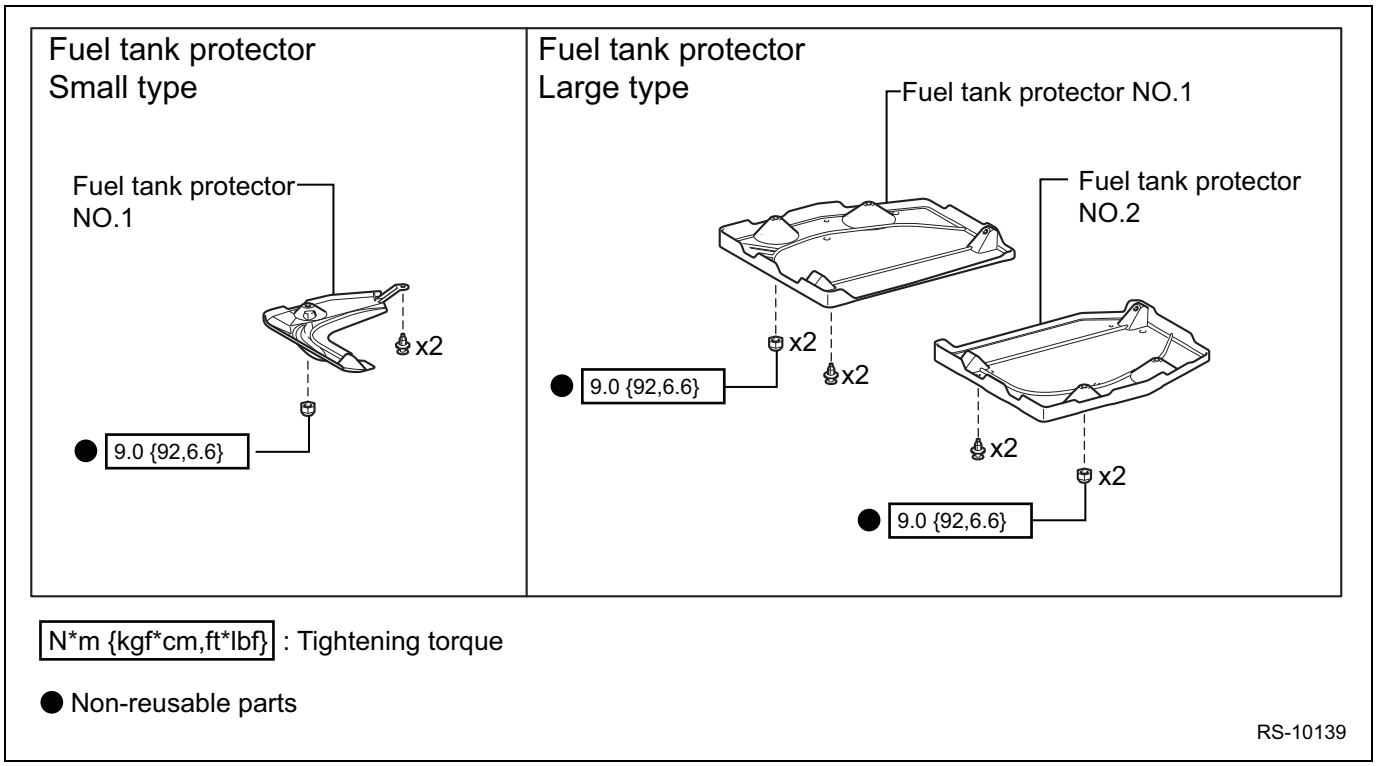

N*m {kgf*cm,ft*lbf} : Tightening torque

● Non-reusable parts

RS-10139

RP

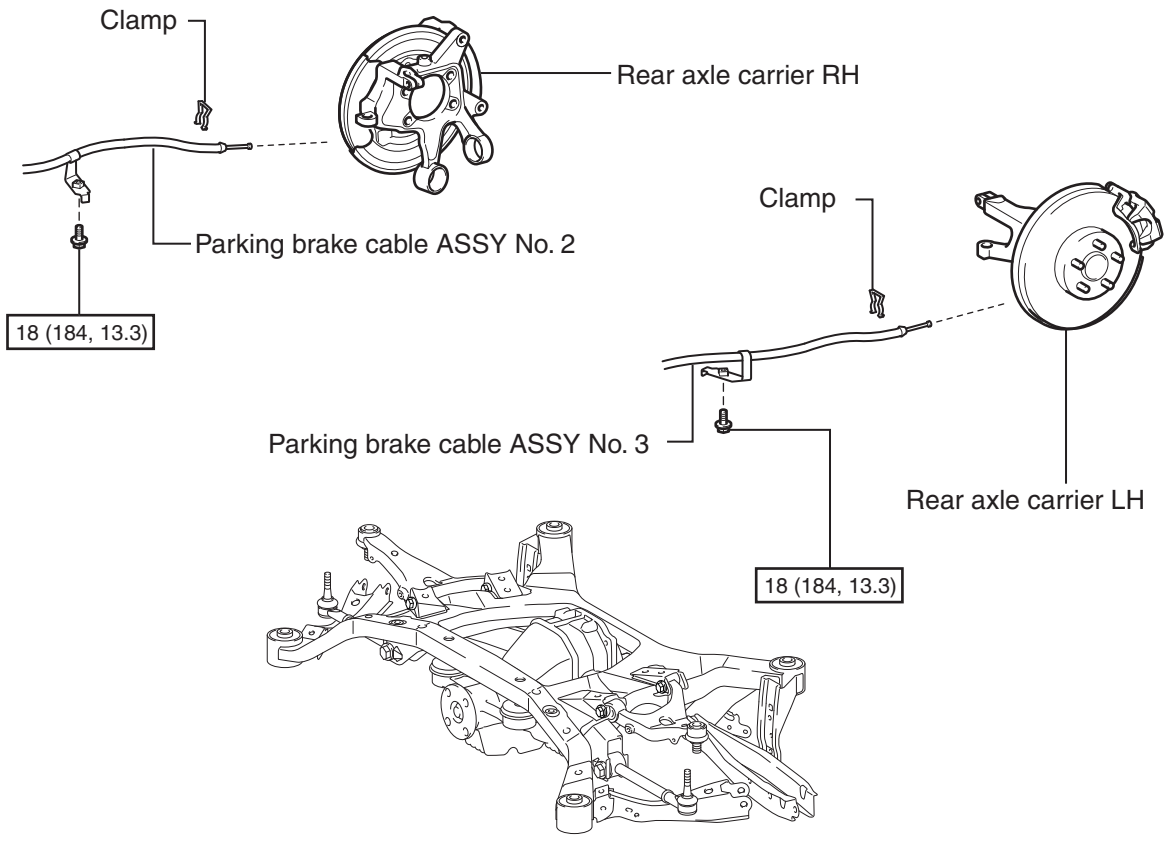

N•m {kgf•cm, ft•lbf} : Tightening torque

RS-00508

RP

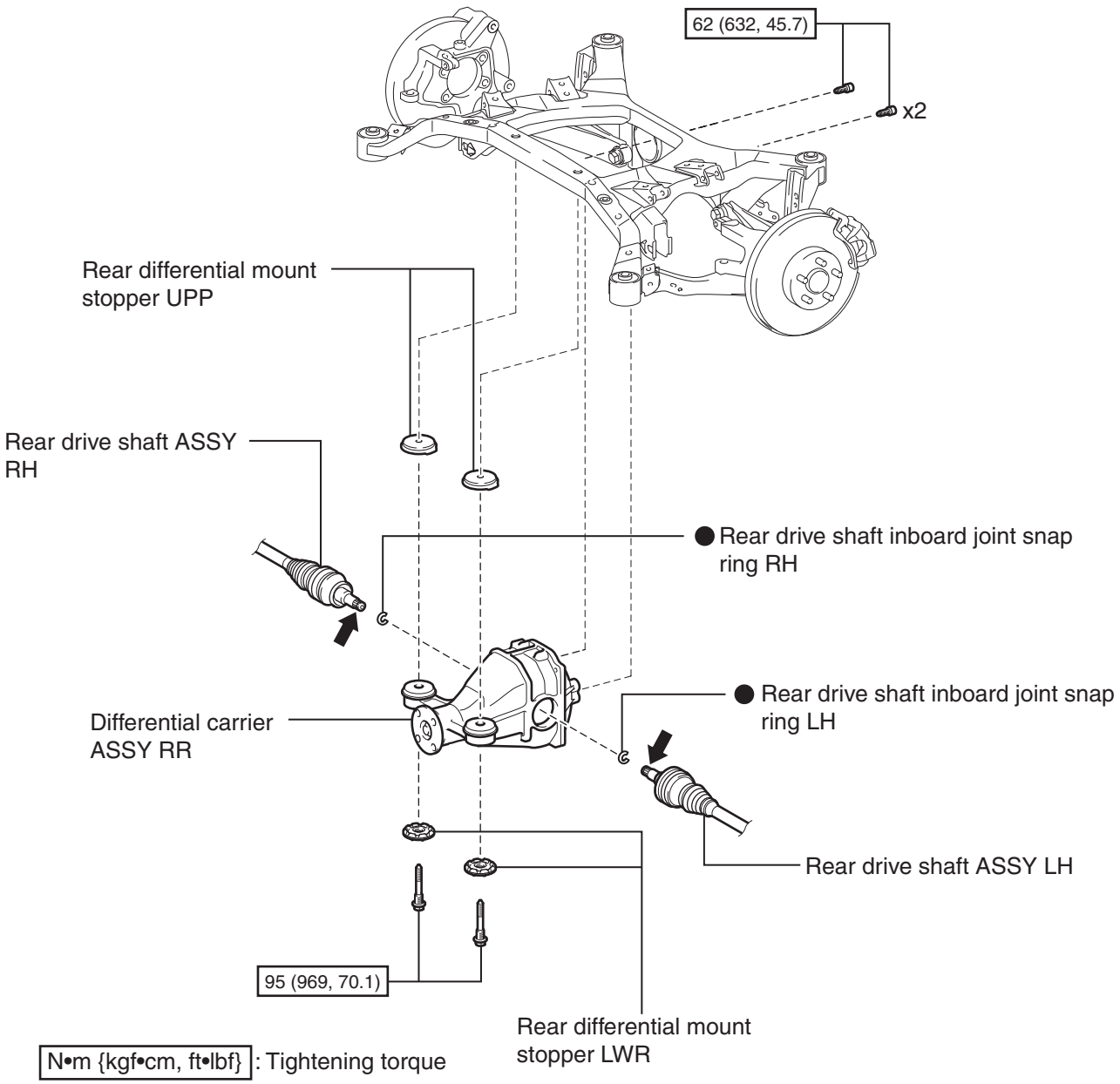

N•m {kgf•cm, ft•lbf} : Tightening torque

● Non-reusable parts

⬅ Differential gear oil

RS-00510

RP

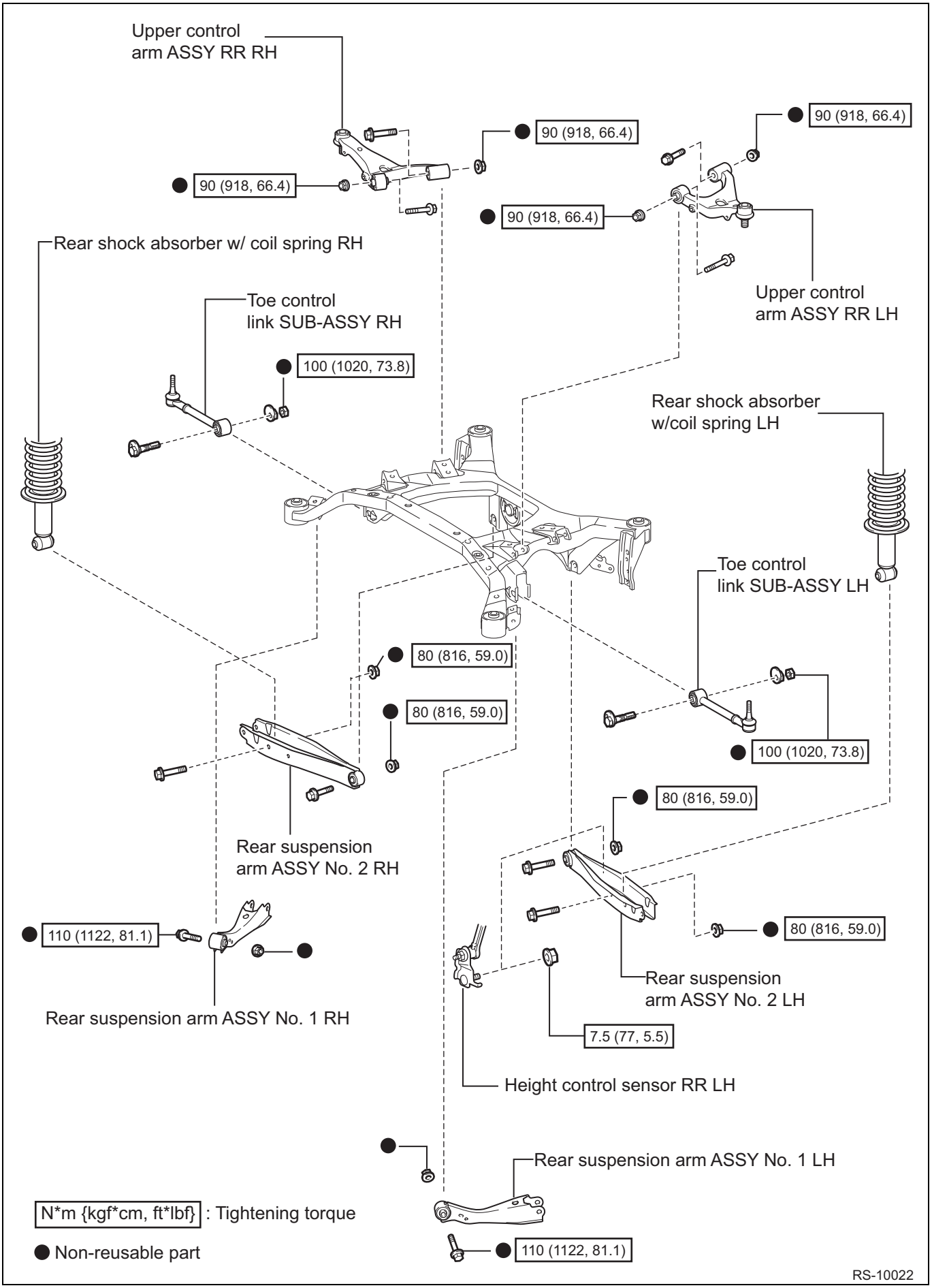
Upper control arm ASSY RR RH
90 (918, 66.4)
90 (918, 66.4)
90 (918, 66.4)
90 (918, 66.4)
Rear shock absorber w/ coil spring RH
Upper control arm ASSY RR LH
Toe control link SUB-ASSY RH
100 (1020, 73.8)
Rear shock absorber w/coil spring LH
Toe control link SUB-ASSY LH
80 (816, 59.0)
80 (816, 59.0)
100 (1020, 73.8)
80 (816, 59.0)
Rear suspension arm ASSY No. 2 RH
110 (1122, 81.1)
80 (816, 59.0)
Rear suspension arm ASSY No. 2 LH
Rear suspension arm ASSY No. 1 RH
7.5 (77, 5.5)
Height control sensor RR LH
Rear suspension arm ASSY No. 1 LH
N*m {kgf*cm, ft*lbf} : Tightening torque
Non-reusable part
110 (1122, 81.1)
RS-10022

RP

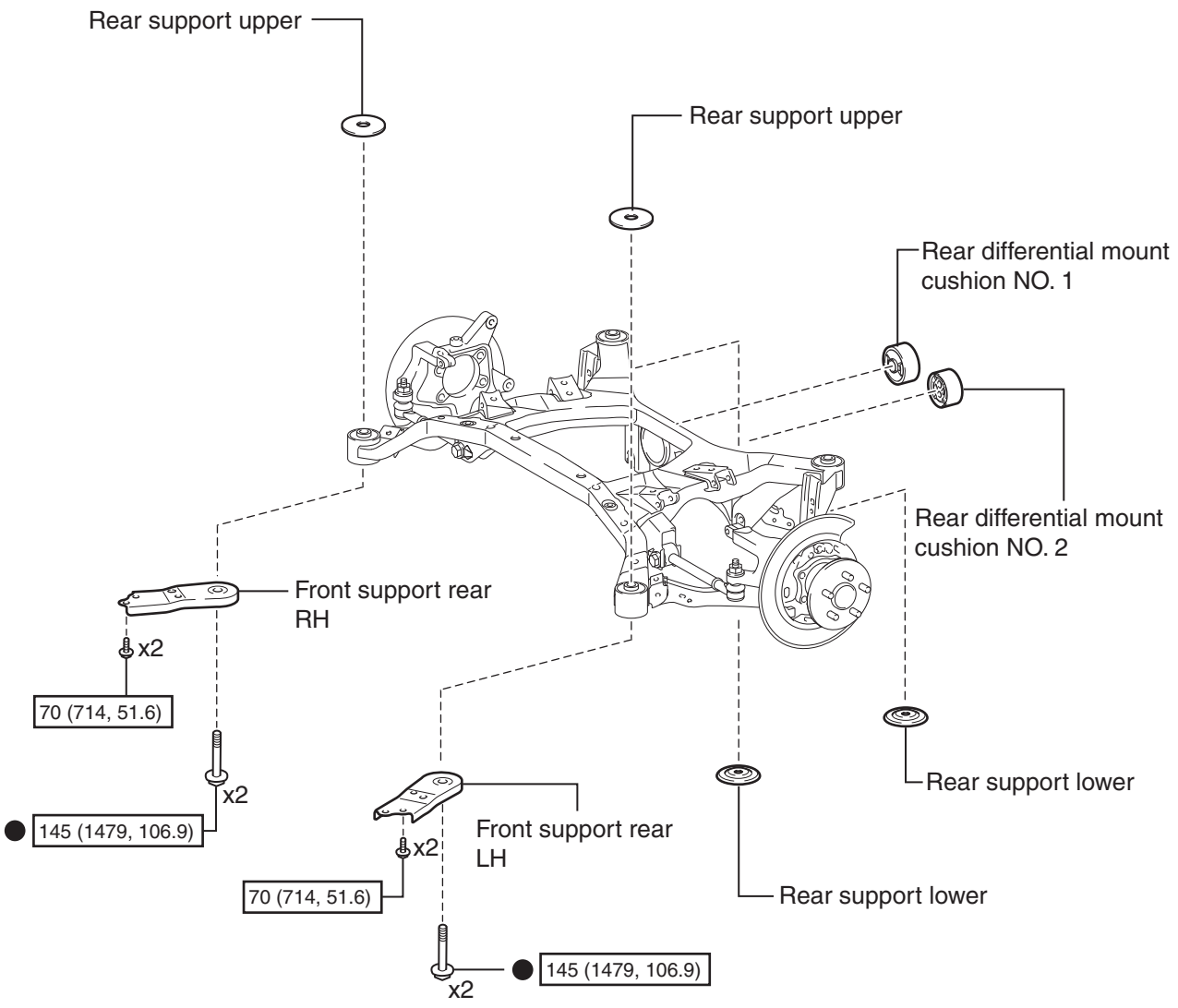

Removal

1. Removal of rear tire
2. Removal of height control sensor RR LH (Refer to LE - 83)
3. Removal of propeller shaft with center bearing ASSY (Refer to DP - 14)
4. Removal of exhaust pipe ASSY CTR (Refer to IE - 41)
5. Removal of fuel tank protector (Refer to FU - 68)

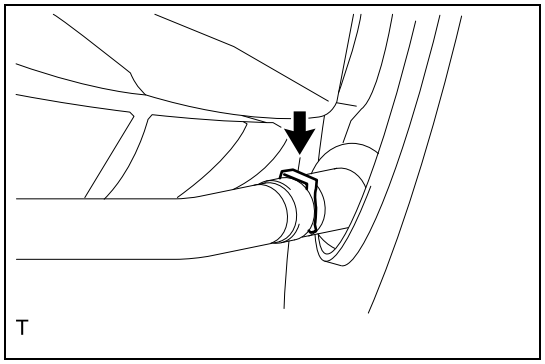

6. Disconnection of parking brake cable ASSY No.3
   (1) Remove the clamp, and then remove the parking brake cable ASSY No.3.

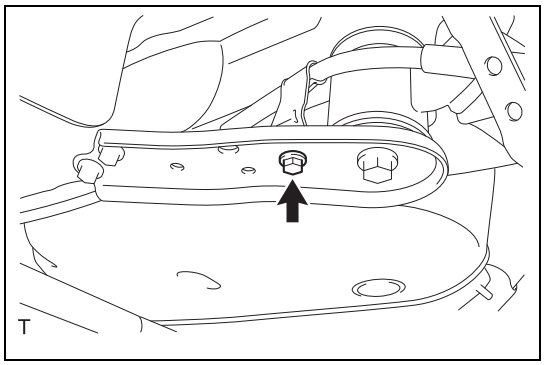

   (2) Remove the bolt, and disconnect the parking brake cable ASSY No. 3 from the rear front support LH.

7. Disconnection of parking brake cable ASSY No.2
   NOTE:
   Perform the same procedure as the LH side.
8. Removal of parking brake cable guide (installed on LH side) (Refer to RP - 16)
9. Removal of parking brake cable guide (installed on RH side)
   NOTE:
   Perform the same procedure as the LH side.
10. Disconnection of rear shock absorber w/coil spring LH (Refer to RP - 16)
11. Disconnection of rear shock absorber w/ coil spring RH
    NOTE:
    Perform the same procedure as the LH side.

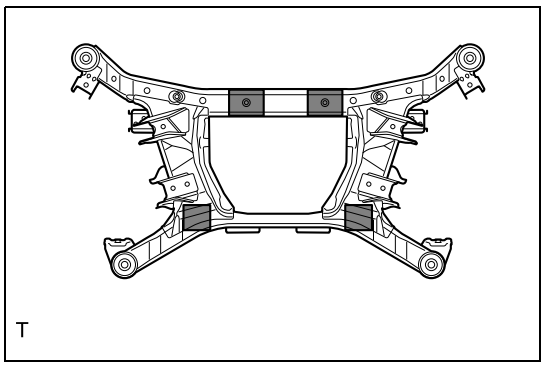

12. Removal of rear suspension member SUB-ASSY
    (1) Set a height adjustable attachment, plate lift attachment, etc. on a universal engine lifter, and support the rear suspension member SUB-ASSY.
    CAUTION:
    - Using the height adjustable attachment, plate lift attachment, etc., set the rear suspension member SUB-ASSY so that it becomes level.
    - Securely support the rear suspension member SUB-ASSY since it is heavy.

Captions in illustration

■	Setting position of height adjustable attachment

    (2) Remove the eight bolts, and remove the rear suspension member SUB-ASSY with the front support rear LH, front support rear RH, rear support upper, and rear support lower.
    (3) Gradually lower the universal engine lifter, and remove the rear suspension member SUB-ASSY.

RP

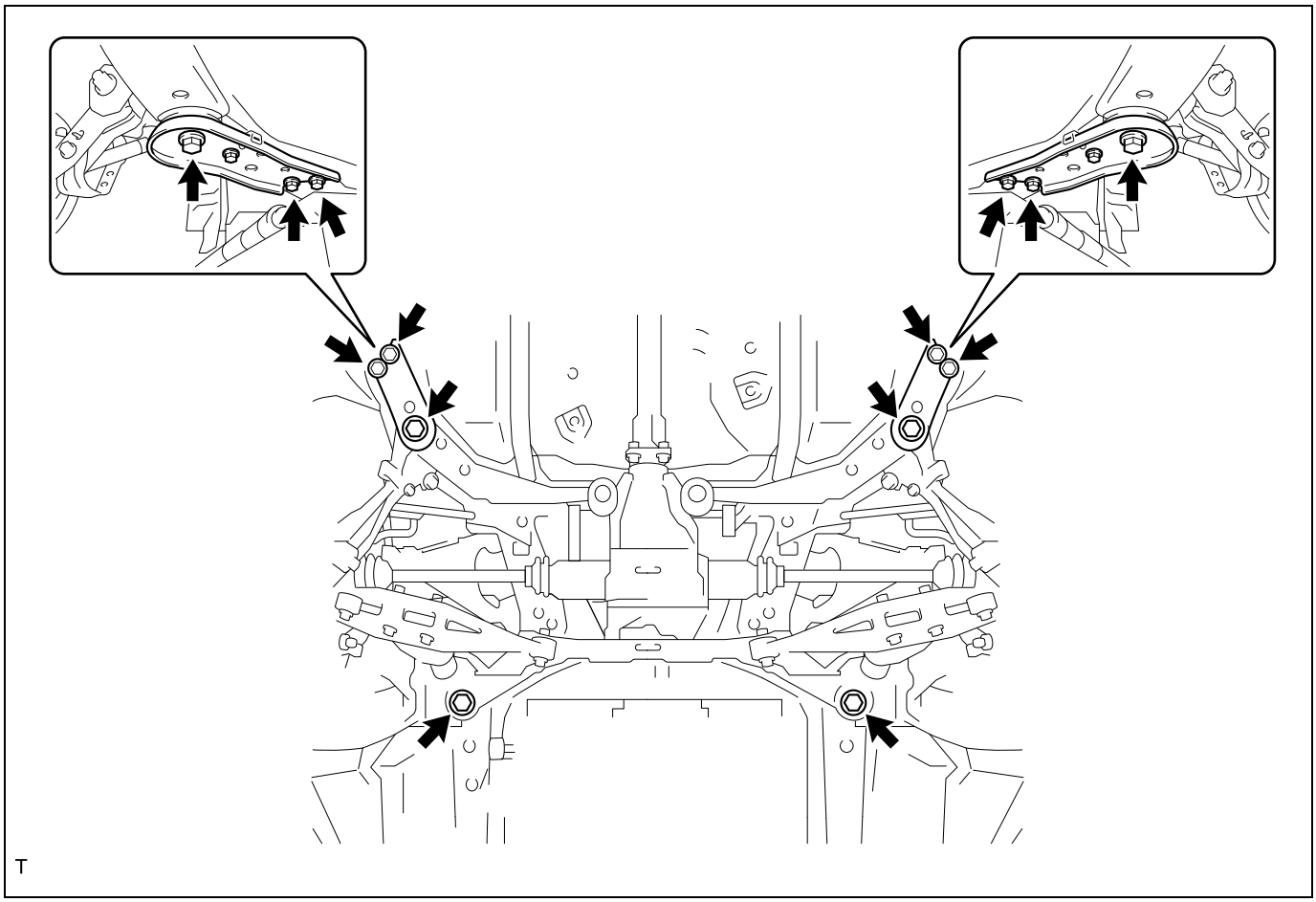

T

CAUTION:
To prevent the rear suspension member SUB-ASSY from tilting greatly or falling, a few operators must support the part when performing the procedure.

13. Removal of differential carrier ASSY RR (Refer to AD - 35)
14. Removal of rear drive shaft ASSY LH (Refer to DP - 5)
15. Removal of rear drive shaft ASSY RH
    NOTE:
    Perform the same procedure as the LH side.
16. Removal of rear axle carrier LH (Refer to AD - 19)
17. Removal of rear axle carrier RH
    NOTE:
    Perform the same procedure as the LH side.
18. Removal of stabilizer bar RR (Refer to RP - 25)

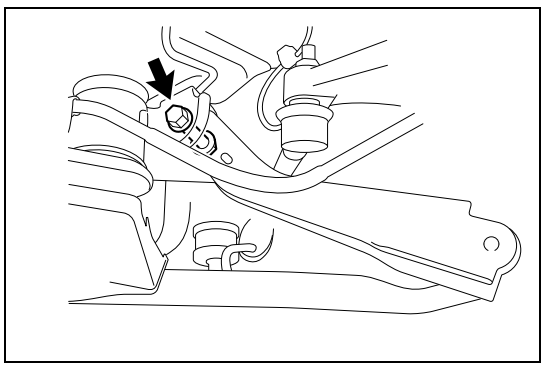

19. Removal of rear suspension arm ASSY No. 1 LH
    (1) Remove the bolt and nut, and remove the rear suspension arm ASSY No. 1 LH.

RP

20. Removal of rear suspension arm ASSY No. 1 RH
    NOTE:
    Perform the same procedure as the LH side.

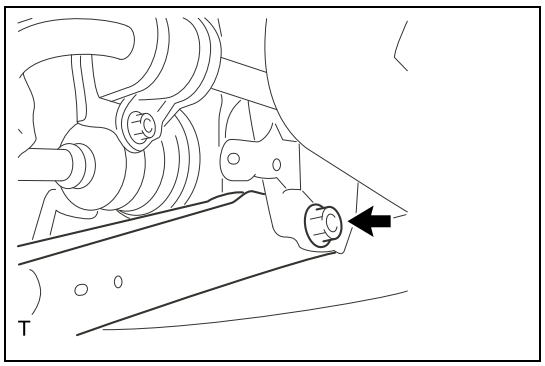

21. Removal of rear suspension arm ASSY No. 2 LH
    (1) Remove the bolt and nut, and remove the rear suspension arm ASSY No. 2 LH from the rear suspension member SUB-ASSY.

22. Removal of rear suspension arm ASSY No. 2 RH
    NOTE:
    Perform the same procedure as the LH side.
23. Removal of toe control link SUB-ASSY LH
    (1) Mark an alignment mark on the toe adjust plate No. 2 and the rear suspension member.

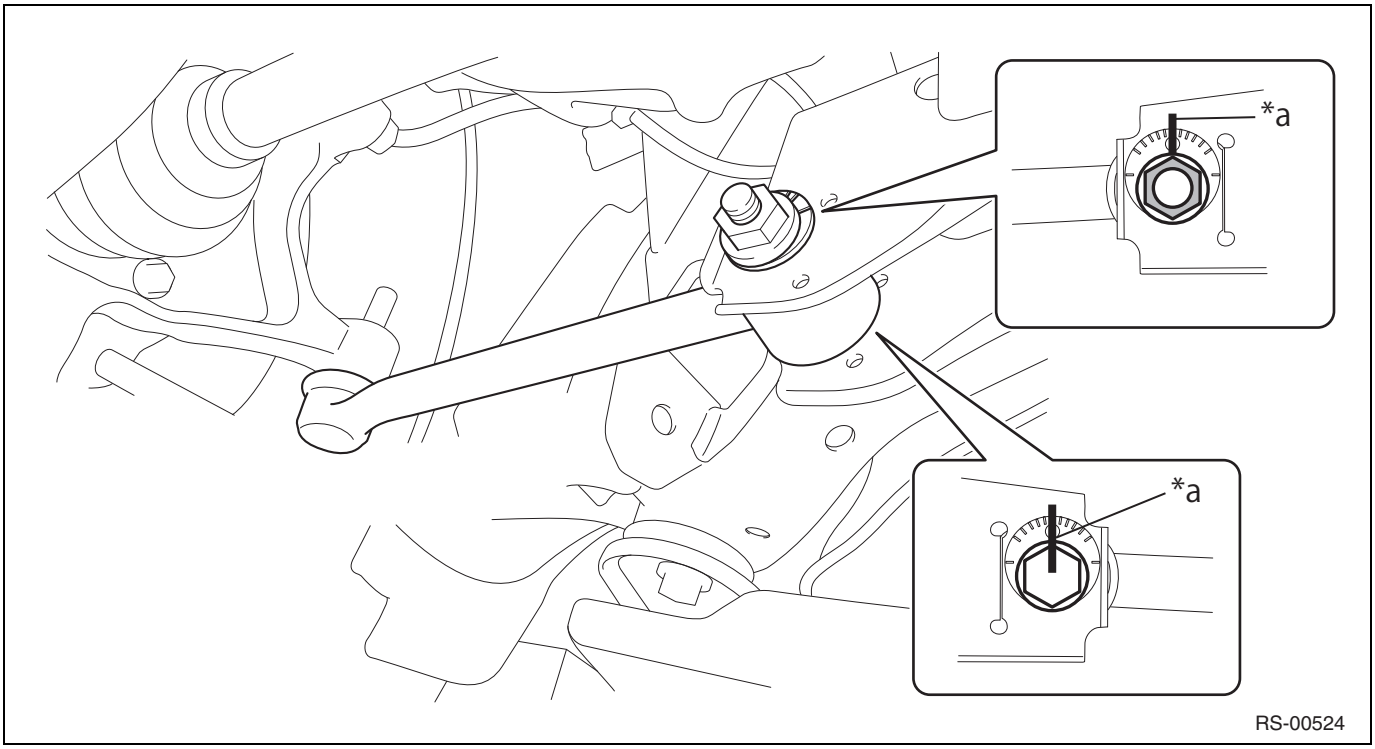

Captions in illustration

*a	Alignment marks	-	-

    (2) Remove the nut, toe adjust cam, and toe adjust plate No. 2, and remove the toe control link SUB-ASSY LH.
24. Removal of toe control link SUB-ASSY RH
    NOTE:
    Perform the same procedure as the LH side.
25. Removal of upper control arm ASSY RR LH (Refer to RP - 13)
26. Removal of upper control arm ASSY RR RH
    NOTE:
    Perform the same procedure as the LH side.
27. Removal of rear differential mount cushion No. 1 (Refer to AD - 68)
28. Removal of rear differential mount cushion No. 2 (Refer to AD - 68)

RP

Installation

1. Installation of rear differential mount cushion No. 1 (Refer to AD - 70)
2. Installation of rear differential mount cushion No. 2 (Refer to AD - 69)
3. Temporary tightening of upper control arm ASSY RR LH (Refer to RP - 14)
4. Temporary tightening of upper control arm ASSY RR RH
   NOTE:
   Perform the same procedure as the LH side.
5. Temporary tightening of toe control link SUB-ASSY LH
   (1) After inserting the toe adjust cam from the front of the vehicle, install the toe control link SUB-ASSY LH and temporarily tighten it with the toe adjust plate No. 2 using a new nut.
   CAUTION:
   Align the alignment marks of the rear suspension member SUB-ASSY and the toe adjust plate No. 2.
6. Temporary tightening of toe control link SUB-ASSY RH
   NOTE:
   Perform the same procedure as the LH side.
7. Temporary tightening of rear suspension arm ASSY No. 2 LH
   (1) Using the bolt and a new nut, temporarily tighten the rear suspension arm ASSY No. 2 LH to the rear suspension member SUB-ASSY.
   CAUTION:
   Insert the bolt from the front of the vehicle.
8. Temporary tightening of rear suspension arm ASSY No. 2 RH
   NOTE:
   Perform the same procedure as the LH side.
9. Temporary tightening of rear suspension arm ASSY No. 1 LH
   (1) Using a new bolt and nut, temporarily tighten the rear suspension arm ASSY No. 1 LH to the rear suspension member SUB-ASSY.
   CAUTION:
   Insert the bolt from the outer side of the vehicle.
10. Temporary tightening of rear suspension arm ASSY No. 1 RH
    NOTE:
    Perform the same procedure as the LH side.
11. Final tightening of upper control arm ASSY RR LH (Refer to RP - 14)
12. Final tightening of upper control arm ASSY RR RH
    NOTE:
    Perform the same procedure as the LH side.
13. Final tightening of toe control link SUB-ASSY LH (Refer to RP - 23)
14. Final tightening of toe control link SUB-ASSY RH
    NOTE:
    Perform the same procedure as the LH side.
15. Final tightening of rear suspension arm ASSY No. 2 LH
    (1) Fully tighten the mounting nut of the rear shock absorber w/ coil spring LH and the rear suspension arm ASSY No. 2 LH.
    Standard value:T=80N·m {816kgf·cm} {59.0ft·lbf}
    (2) Fully tighten the nut of the rear suspension arm ASSY No. 2 LH and the rear suspension member SUB-ASSY.
    Standard value:T=80N·m {816kgf·cm} {59.0ft·lbf}
16. Final tightening of rear suspension arm ASSY No. 2 RH
    NOTE:
    Perform the same procedure as the LH side.
17. Final tightening of rear suspension arm ASSY No. 1 LH
    (1) Using the bolt and nut, fully tighten the rear suspension arm ASSY No. 1 LH.
    Standard value:T=110N·m {1122kgf·cm} {81.1ft·lbf}
    CAUTION:
    Secure the nut and turn the bolt.

18. Final tightening of rear suspension arm ASSY No. 1 RH
    NOTE:
    Perform the same procedure as the LH side.
19. Installation of differential carrier ASSY RR (Refer to AD - 65)
20. Installation of rear drive shaft ASSY LH (Refer to DP - 11)
21. Installation of rear drive shaft ASSY RH
    NOTE:
    Perform the same procedure as the LH side.
22. Installation of rear axle carrier LH (Refer to AD - 23)
23. Installation of rear axle carrier RH
    NOTE:
    Perform the same procedure as the LH side.
24. Installation of rear suspension member SUB-ASSY
    (1) Set a height adjustable attachment, plate lift attachment, etc. on a universal engine lifter, and support the rear suspension member SUB-ASSY.
        CAUTION:
        - Using the height adjustable attachment, plate lift attachment, etc., set the rear suspension member SUB-ASSY so that it becomes level.
        - Securely support the rear suspension member SUB-ASSY since it is heavy.
    (2) Gradually raise the universal engine lifter until there is no space between the rear suspension member SUB-ASSY and the vehicle.
        CAUTION:
        To prevent the rear suspension member SUB-ASSY from tilting greatly or falling, a few operators must support the part when performing the procedure.
    (3) While supporting the rear suspension member SUB-ASSY with a high transmission jack, install the rear suspension member SUB-ASSY with the front support rear LH, front support rear RH, rear support upper, and rear support lower using four new bolts (bolt A) and four bolts (bolt B).
        CAUTION:
        After temporarily tightening the bolts A in the numerical order shown in the figure, fully tighten them.

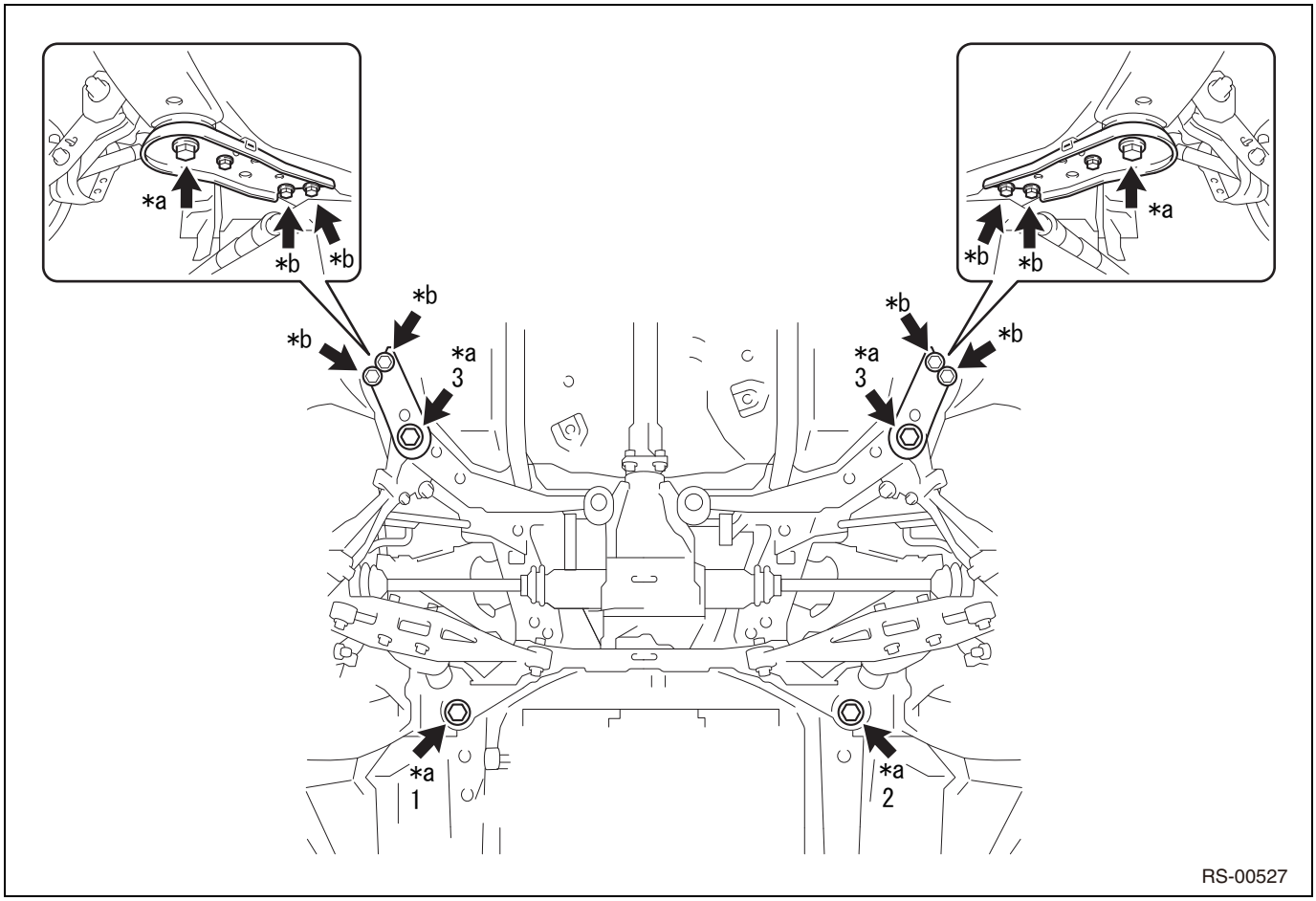

Captions in illustration

*a	Bolt A (new)	*b	Bolt B

Standard value:Bolt A

T=145N·m {1479kgf·cm} {106.9ft·lbf}

Bolt B

T=70N·m {714kgf·cm} {51.6ft·lbf}

25. Temporary tightening of rear shock absorber w/ coil spring LH
    (1) Using the bolt and a new nut, temporarily tighten the rear suspension arm ASSY No. 2 LH to the rear shock absorber w/ coil spring LH.
    NOTE:
    The bolt may be inserted from either side.
26. Temporary tightening of rear shock absorber w/ coil spring RH
    NOTE:
    Perform the same procedure as the LH side.
27. Installation of stabilizer bar RR (Refer to RP - 27)
28. Installation of parking brake cable guide (installed on LH side)
    (1) Using the bolt, install the parking brake cable guide.
    Standard value:T=18N·m {184kgf·cm} {13.3ft·lbf}
29. Installation of parking brake cable guide (installed on RH side)
    NOTE:
    Perform the same procedure as the LH side.
30. Installation of parking brake cable ASSY No.3
    (1) Using the clamp, install the parking brake cable ASSY No.3 to the rear axle carrier.
    (2) Using the bolt, install the parking brake cable ASSY No.3 to the rear front support member LH.
    Standard value:T=18N·m {184kgf·cm} {13.3ft·lbf}

31. Installation of parking brake cable ASSY No.2
    NOTE:
    Perform the same procedure as the LH side.
32. Installation of fuel tank protector (Refer to FU - 71)
33. Installation of propeller shaft with center bearing ASSY (Refer to DP - 16)
34. Installation of exhaust pipe ASSY CTR (Refer to IE - 46)
35. Installation of height control sensor RR LH (Refer to LE - 83)
36. Final tightening of rear stabilizer link SUB-ASSY (installed on LH side)
37. Final tightening of rear stabilizer link SUB-ASSY (installed on RH side)
38. Installation of rear tire
    Standard value:T=120N·m {1224kgf·cm} {88.5ft·lbf}
39. Inspection and adjustment of rear wheel alignment (Refer to AL - 7)
40. Initialization of head light leveling computer (refer to LE - 38)
41. Headlight beam adjustment (Refer to LE - 51)
42. VDC sensor mid point setting (Refer to BC - 15)

Tire pressure monitoring

Tire pressure warning system

Precautions TM-2
Parts location TM-3
System diagram TM-4
Description of functions TM-5
How to troubleshoot TM-6
Check list for interview TM-9
Registration settings TM-10
Symptom table TM-11
ECM terminal arrangement TM-11
Diagnosis system TM-12
Checking / clearing diagnostic codes TM-13
Data monitor / active test TM-14
List of diagnostic codes TM-17
B1247 . . . . . TM-17
C2111 . . . . . TM-20
C2112 . . . . . TM-20
C2113 . . . . . TM-20
C2114 . . . . . TM-20
C2121 . . . . . TM-23
C2122 . . . . . TM-23
C2123 . . . . . TM-23
C2124 . . . . . TM-23
C2181 . . . . . TM-23
C2182 . . . . . TM-23
C2183 . . . . . TM-23
C2184 . . . . . TM-23
C2126 . . . . . TM-30
C2141 . . . . . TM-36
C2142 . . . . . TM-36
C2143 . . . . . TM-36
C2144 . . . . . TM-36
C2171 . . . . . TM-39
C2176 . . . . . TM-42
C2179 . . . . . TM-42
Tire pressure warning light circuit TM-44
ECM power supply circuit TM-46

TIRE PRESSURE WARNING RECEIVER

Components TM-48
Removal TM-50
Installation TM-50

Tire pressure warning valve

Components TM-52
Removal TM-53
Installation TM-53
Disposal TM-55

Tire pressure warning system

Precautions

1. Tire pressure warning system precautions
   (1) Periodical adjustment is necessary because the tire pressure decreases as time passes.
   (2) In winter, the tire pressure decreases due to a decrease in ambient temperature (every 10°C decrease in ambient temperature, the tire pressure decreases 10 kPa {0.1 kgf/cm^2, 1.5 psi}). Tire pressure warning light may illuminate if the tire pressure is not adjusted properly. If the temperature change in a day is large, increase the pressure to fit the low temperature condition. Doing so will decrease the unnecessary work.
   (3) Depending on the tire type, the system may not operate properly even though the genuine wheels are used.
   (4) During tire removal/installation, be careful not to damage the tire pressure warning valve/transmitter by the interference between tire pressure warning valve/transmitter and tire bead.
   (5) Before detaching tire bead or removing the tire from wheel, be careful not to damage the tire pressure warning valve/transmitter by dropping the tire pressure warning valve/transmitter to inside the tire.
   (6) When installing the tire pressure warning valve/transmitter, be sure to use the new grommet, washer, nut in order to seal tightly.
   (7) If any one of the tire pressure warning valve/transmitter is replaced, it is necessary to register the ID code of respective tire pressure warning valve/transmitter to the tire pressure warning ECM/receiver. If the tire pressure warning valve/transmitter is replaced, it is necessary to re-register the ID code of all tire pressure warning valve/transmitter. Before starting the ID code registration, record the current ID code.
   (8) Do not use non-genuine cap. Use of non-genuine cap may cause adhering to the tire pressure warning valve/transmitter.
   (9) The system may not operate properly in the following conditions. (If the normal condition returns, operation comes back.)
      (a) If not all of the tire pressure warning valve/transmitter registered to the tire pressure warning ECM/receiver are installed on the tire & wheel.
      (b) If the ID codes of all tire pressure warning valve/transmitter are not registered to the tire pressure warning ECM/receiver.
      (c) If tire pressure is excessively high (absolute pressure: 480 kPa {4.9 kgf/cm^2, 70 psi} or more, relative pressure: 380 kPa {3.9 kgf/cm^2, 55 psi} or more)
      (d) If the tire pressure warning valve/transmitter battery is deteriorated.
   (10) The system may not operate properly in the following conditions. (If the normal condition returns, operation comes back.)
      (a) If the electronic device with close frequency band is used.
      (b) If the radio device or other system with close frequency band is working inside the vehicle.
      (c) If the window film with effect of blocking radio wave is used.
      (d) If the snow or ice is adhering especially near the wheel or wheel housing.
      (e) If the non-genuine wheel is used.
      (f) If the tire chain is used.

Parts location

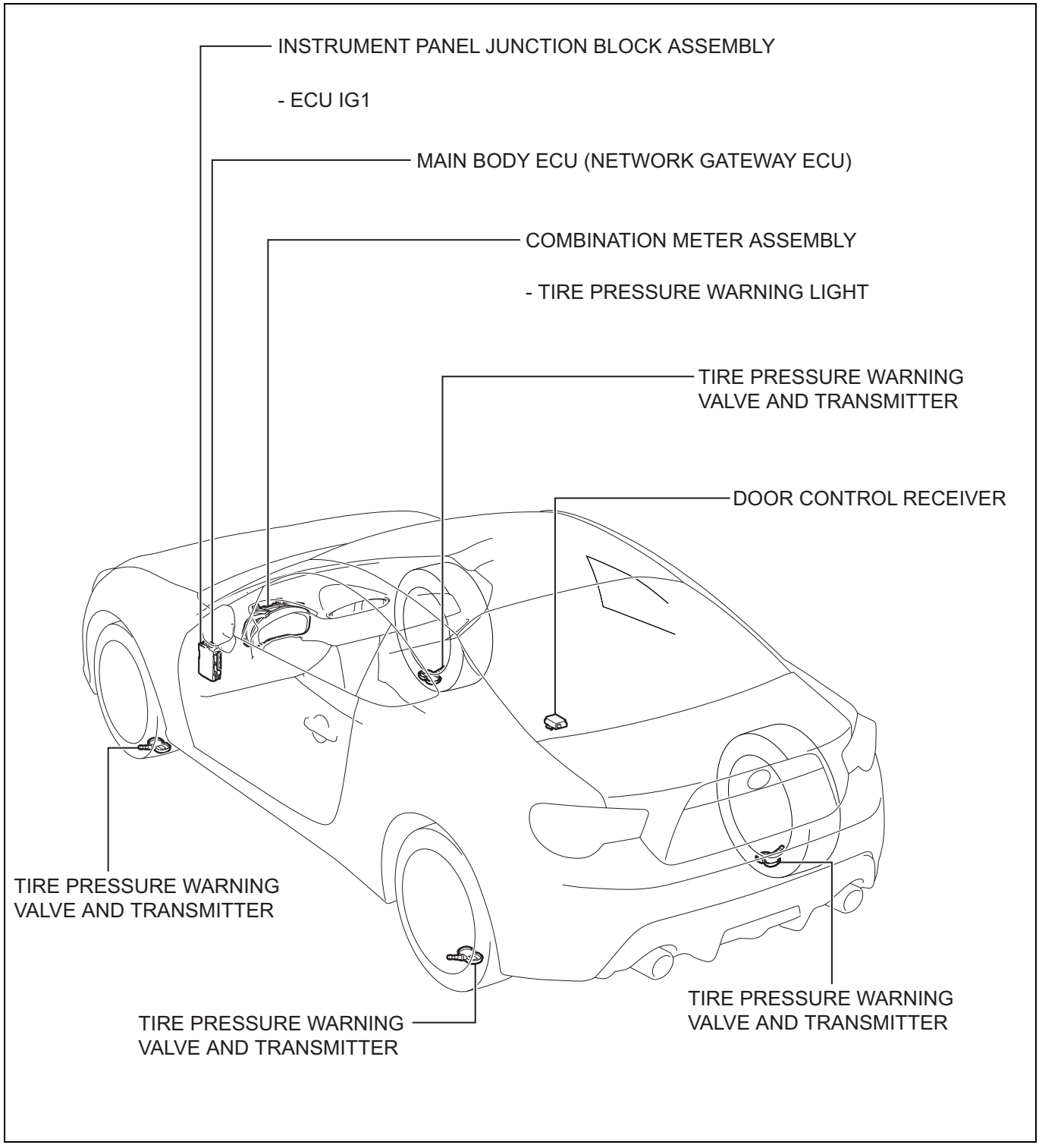

System diagram

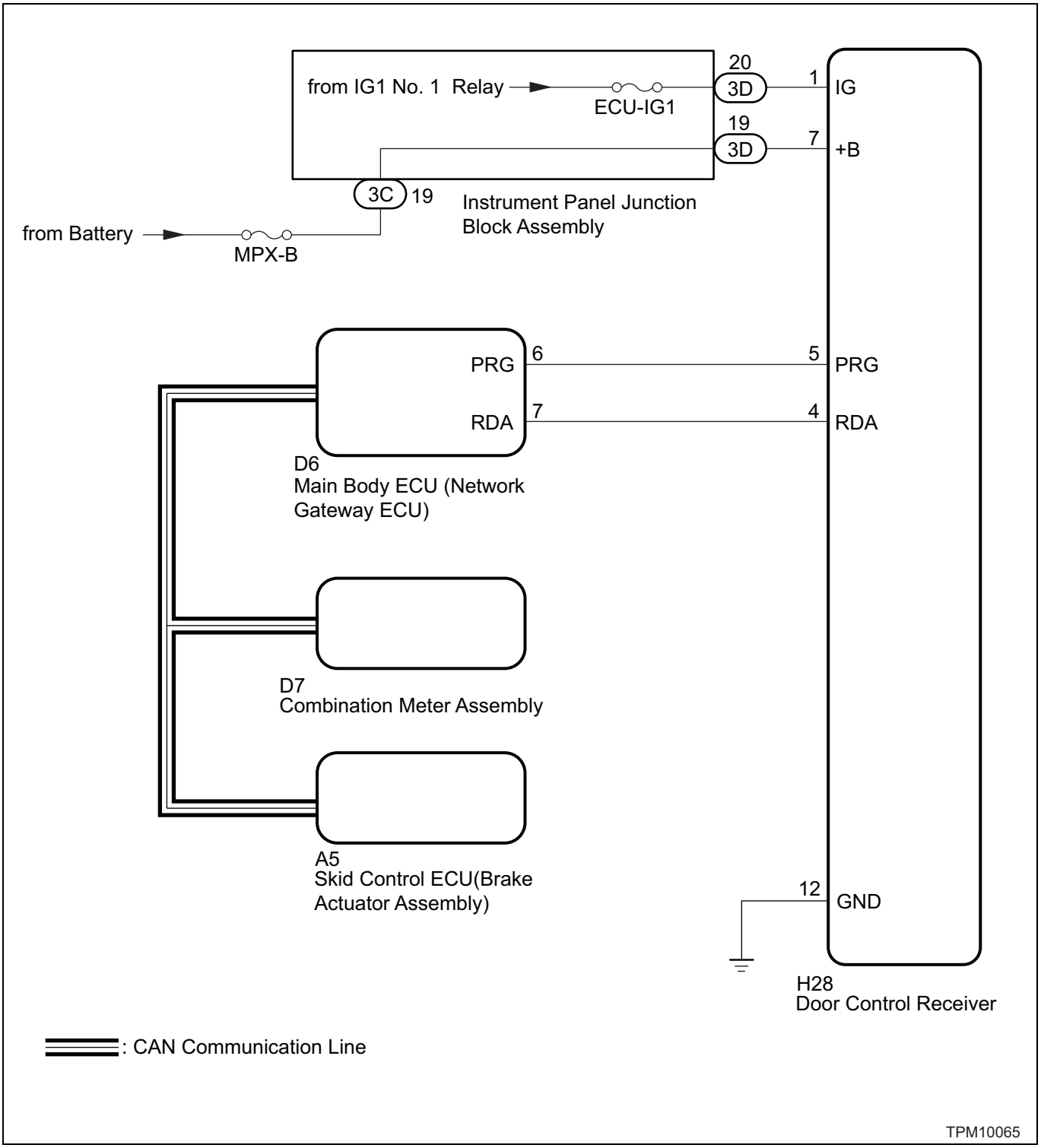

NOTE:

Each tire pressure warning valve/transmitter sends information of ID, temperature and tire pressure to the tire pressure warning ECM/receiver.

ECM transmission (transmitter)	ECM receive	Signal	Communication method
Skid control ECM (brake actuator ASSY)	Main body ECM (multiplex network body ECM)	Vehicle speed signal	CAN communication line
Main body ECM (multiplex network body ECM)	Combination meter ASSY	Tire pressure warning light signal	CAN communication line

TM

Description of functions

1. System description
   (1) The tire pressure warning system sends warnings to the driver by illuminating the tire pressure warning light when the tire pressure decreases below threshold.
   (2) As the following illustration shows, the tire pressure warning ECM/receiver receives the information of tire pressure, temperature, ID code, sent from the tire pressure warning valve/transmitter. It detects the low tire pressure based on this information.

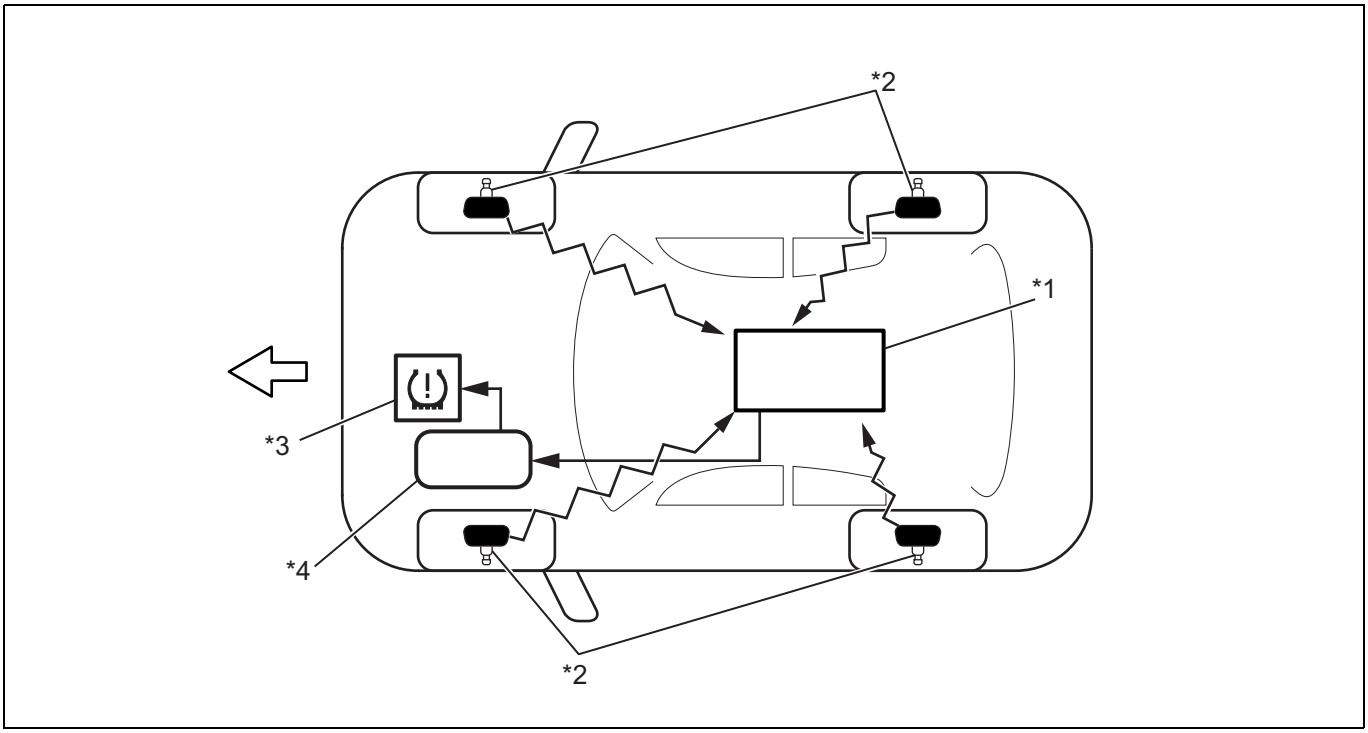

Captions in illustration

*1	Tire pressure warning ECM/receiver	*2	Tire pressure warning valve/transmitter
*3	Combination meter ASSY - tire pressure warning light	*4	Main body ECM (multiplex network body ECM)

2. Summary of ID registration
   (1) If the tire pressure warning valve/transmitter is replaced, it is necessary to register the ID code of respective tire pressure warning valve/transmitter to the tire pressure warning ECM/receiver.
   (2) If any one of the tire pressure warning valve/transmitter is replaced, it is necessary to register the ID code of respective tire pressure warning valve/transmitter to the tire pressure warning ECM/receiver. If the tire pressure warning valve/transmitter is replaced, it is necessary to re-register the ID code of all tire pressure warning valve/transmitter. Before starting the ID code registration, record the current ID code.
3. Function of major component

Parts	Function
Tire pressure warning ECM/receiver	• Receives the information from the tire pressure warning valve/transmitter to monitor the tire pressure. • Outputs the various signals to the meter when the tire pressure warning ECM/receiver detects the low tire pressure, system malfunction and transition to initialization. • Use the signal strength change from the tire pressure warning valve/transmitter as judgement criteria when the tire pressure warning ECM/receiver detects the defects in vehicle speed signal. It is judged that the vehicle is driven when ECM detects the signal strength change from the tire pressure warning valve/transmitter.
Tire pressure warning valve/transmitter	Measures the tire pressure and temperature, and send the measured value and ID code to the tire pressure warning ECM/receiver.
Combination meter ASSY	Sends the tire pressure warning light signal to the tire pressure warning ECM/receiver.
Tire pressure warning light	• Illuminates after 1 minute blinking and sends warning to the driver based on the signal from the tire pressure warning ECM/receiver. • 2 digits diagnostic code (DTC) is displayed.
Main body ECM (multiplex network body ECM)	• Main body ECM (multiplex network body computer) and tire pressure warning ECM/receiver communicates via direct wiring. • Main body ECM (multiplex network body computer) is connected to the combination meter ASSY via CAN communication line.

How to troubleshoot

NOTE:

- Use the following procedure to troubleshoot the tire pressure warning system.
- Make sure that the wireless door lock control system diagnosis mode has been finished before performing the following procedure.

1	Bring in the car

Next

2	Interview and phenomenon check

(1) Interview the customer using the check list for interview to understand the problems.

NOTE:

It is important to collect many useful information from the customer in order to perform the quick service.

Next

3	Adjust the tire pressure.

(1) Turn the ignition switch to OFF.
(2) Adjust tire pressures to the standard value. (Refer to TM - 2)
(3) Connect the SSM4 to the DLC3.
(4) Turn the ignition switch to ON.
(5) Enter the following menu. [Each System] / [Tire Pressure Monitor] / [Data monitor]
(6) Read the value of the Tire Pressure.
(7) Check data list. (Refer to TM - 14)

NOTE:

- It may need several minutes until the updated tire pressure data is displayed.
- If the tire pressure warning light illuminates because of the low tire pressure, after adjustment of the tire pressure, the tire pressure warning light goes off when the data from all tire pressure warning valve/transmitter are received by the tire pressure warning ECM/ receiver.

Result

Condition	Go to
The tire pressure warning light remains ON.	A
The tire pressure warning light goes OFF.	B

B → Go to Step 10.

A

4	Check CAN communication system.

(1) Check CAN communication system.

TM

Result

Result	Go to
Functioning properly	A
Not functioning properly	B

B → Go to CAN communication system.

A

5	Check DTC

(1) Check diagnostic codes. (Refer to TM - 13)

Result

Result	Go to
Diagnostic codes are output.	A
Diagnostic codes are not output.	B

B → Go to Step 7.

A

6	Diagnostic code chart

(1) Refer to list of diagnostic codes. (Refer to TM - 17)

Next

Go to Step 9.

7	Symptom table

(1) Refer to symptom table. (Refer to TM - 11)

Next

8	Circuit inspection

(1) Refer to the electric circuit inspection procedure. (Refer to IN - 27)

Next

9	Repair or replace.

(1) Repair or replace the part according to the diagnostic code.

Next

10	Confirmation test

(1) Confirm the ECM data list to confirm the tire pressure is received properly. (Refer to TM - 14)

Next

Complete

Check List for Interview

Tire Pressure Monitoring Checklist for Interview

Inspector:

Name		Registration No.	
		First registration	
		Frame No.	
Year/month/date of vehicle bring-in	／ ／	Odometer reading	
Date when trouble occurred	／ ／		
Frequency of occurrence	☐ Continuous ☐ Intermittent (times/day)		
Weather	☐ Fine ☐ Cloudy ☐ Rainy ☐ Other ( )		
Outside temperature	°C (°F)		
Trouble symptom			

TPM00108

Registration settings

1. Before registration

   CAUTION:

   Transmitter ID is written in the tire pressure warning valve/transmitter. It is impossible to read the transmitter ID after tire is installed to the wheel. Because of this, be sure to record the transmitter ID before tire installation.

   (1) When replacing the tire pressure warning ECM/receiver:

   (a)Check the registered ID of transmitter that is recorded in the former ECM using SSM4, and record it.

   (b)If the recorded transmitter ID is not read out because of a part failure in the tire pressure warning valve/transmitter etc., remove the tire from wheel and check the ID in the tire pressure warning valve/transmitter.

   (2) When replacing the tire pressure warning valve/transmitter:

   (a)Record the 7 digits number (transmitter ID) in the tire pressure warning valve/transmitter.

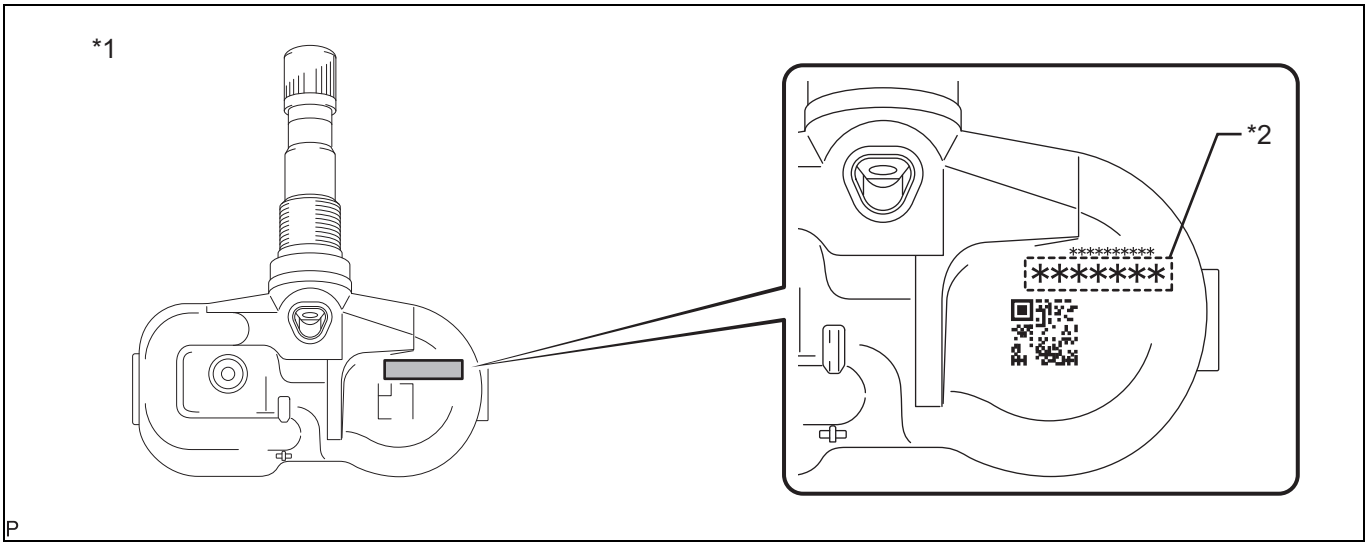

P

Captions in illustration

*1	Tire pressure warning valve/transmitter	*2	Transmitter ID (7 digits number)

2. Register the transmitter ID.

   NOTE:

   - If the registration has finished, all ID registered previously are cleared.
   - If the registration of the tire pressure warning valve/transmitter ID is not finished within 300 seconds, the registration will be cancelled.

   (1) Adjust all tire pressures to the specified pressure. (Refer to TM - 2)
   (2) Turn the ignition switch to OFF.
   (3) Connect the SSM4 to the DLC3.
   (4) Turn the IG and SSM4 to ON.
   (5) Enter the following menu. [Each System] / [Tire Pressure Monitor] / [Work Support] / [Transmitter ID regist]
   (6) Perform the procedure displayed in the SSM4.

3. Confirmation of transmitter ID registration

   CAUTION:

   - It takes several minutes in order to update the tire pressure data. If the data is not displayed, perform troubleshooting according to the procedures from diagnostic code C2121 to C2124. (Refer to TM - 23)
   - If the ID is not registered, and 3 minutes or more passes, diagnostic code C2171 is recorded in the tire pressure warning ECM/receiver.
   - If the normal tire pressure is displayed, ID registration has been finished properly.
   - If the normal tire pressure is not displayed after several minutes, ID is wrong or system is malfunctioning.
   - After registration of all ID, diagnostic code C2126 is registered in the tire pressure warning ECM/receiver, and the tire pressure warning light illuminates after 1 minute blinking. If the data is sent to the tire pressure warning ECM/receiver from all tire pressure warning valve/transmitter registered to the tire pressure warning ECM/receiver, diagnostic code C2126 is cleared and the tire pressure warning light goes off.

   (1) Enter the following menu. [Each System] / [Tire Pressure Monitor] / [Data monitor]
   (2) Read the value of the Tire Pressure.
   (3) Confirm that data of all transmitters are displayed in SSM4 display screen.

Symptom table

NOTE:

- Determine the cause of symptom using the following table. If the several areas are listed as a cause, the cause is listed in the column of the <suspected area> in the order of high possibility that becomes symptom cause. Confirm each symptom by checking the suspected area in the order of the list. If necessary, replace part.
- Before checking the following suspected area, check the fuse and relay relating this system.

Tire pressure warning system

Symptoms	Inspection items	Reference pages
Tire pressure is dropping but the tire pressure warning light does not illuminate.	Data list confirmation (ID tire pressure)	TM - 14
	ID code confirmation (registration)	TM - 10
Tire pressure warning light illuminates (goes off during initial check)	Tire pressure warning light circuit	TM - 44
Tire pressure warning light illuminates (illuminates during initial check)	Data list confirmation (ID tire pressure)	TM - 14
	Adjust the tire pressure.	-
	ID code confirmation (registration)	TM - 10

ECM terminal arrangement

1. Check tire pressure warning ECM/receiver.
   NOTE:
   Check from the back side of the connector, with the connector connected.

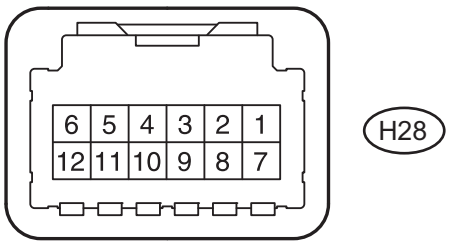

P

(1) Measure the voltage and resistance according to the following table. If it is out of standard value, it is possible that the ECM is faulty.

Terminal No. (terminal symbol)	Terminal description	Condition	Specific condition
H28-1 (IG) - H28-12 (GND)	IG power supply	IG SW ON	11 to 14 V
H28-4 (RDA) - H28-12 (GND)	Output signal	IG SW ON	Pulse generation (refer to waveform 1)
H28-5 (PRG) - H28-12 (GND)	Input signal	IG SW ON	Pulse generation (refer to waveform 1)
H28-7 (+B) - H28-12 (GND)	Power supply	Always	11 to 14 V
H28-12 (GND) - chassis ground	Ground	Always	1 Ωor less

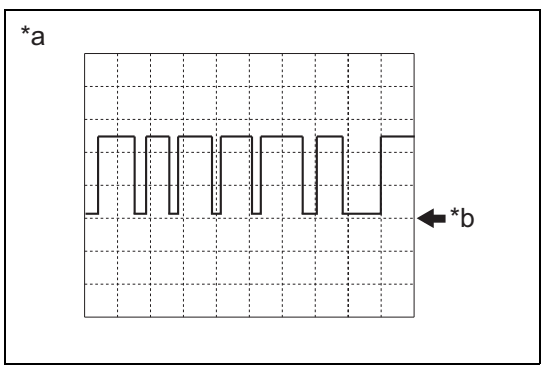

(2) Check the waveform 1 using oscilloscope.

Captions in illustration

*a	Note
*b	GND

Waveform 1

Item	Contents
Terminals	H28-4 (RDA) - H28-12 (GND) H28-5 (PRG) - H28-12 (GND)
Equipment setting	5 V/DIV, 50 µs./DIV.
Inspection conditions	IG SW ON

NOTE:
Waveform shown in the figure is for reference. If the waveform changing HIGH and LOW alternately is shown, it is judged that the tire pressure warning ECM/receiver is normal (HIGH indicates the voltage between IG power supply voltage and the voltage that is

TM

2.2 V lower than A, and LOW indicates the voltage between 0 and 1.2V).

Diagnosis system

1. Check warning light.
   CAUTION:
   - If the malfunction occurs in the tire pressure warning system, the tire pressure warning light blinks at 0.5 seconds interval, and illuminates after 1 minute.
   - If the malfunction returns to normal, the tire pressure warning light goes off.
   - If the tire pressure warning light illuminates, check the tire pressure immediately and adjust to the recommended pressure.
   - After IG is ON, the tire pressure warning light illuminates for 3 seconds and then goes off. If the tire pressure warning light does not illuminate for 3 seconds, perform the troubleshooting of the tire pressure warning light circuit. (Refer to TM - 44)

   (1) Turn the ignition switch to ON.

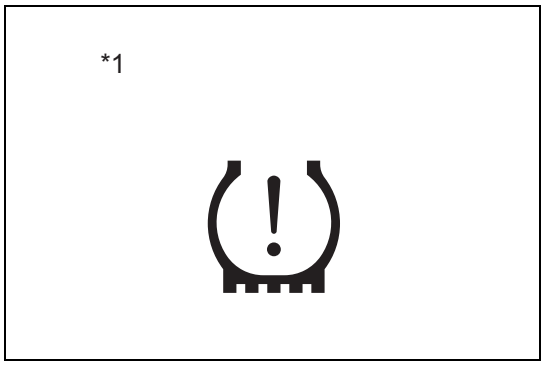

   (2) Confirm that the tire pressure warning light illuminates for 3 seconds.

Captions in illustration

*1	Tire pressure warning light

2. Precautions when the tire pressure warning light illuminates
   (1) Check the tire pressure if the tire pressure warning light does not illuminate after IG ON or if the warning light illuminates during driving. If the tire pressure warning light illuminates within several hours after tire pressure adjustment, air is leaking little by little from the tire.
   (2) The system may not operate properly in the following conditions. (If the normal condition returns, operation comes back.)
      (a) If not all of the tire pressure warning valve/transmitter registered to the tire pressure warning ECM/receiver are installed on the tire & wheel.
      (b) If the ID codes of all tire pressure warning valve/transmitter are not registered to the tire pressure warning ECM/receiver.
      (c) If tire pressure is excessively high (absolute pressure: 480 kPa {4.9 kgf/cm^2, 70 psi} or more, relative pressure: 380 kPa {3.9 kgf/cm^2, 55 psi} or more)
      (d) If the tire pressure warning valve/transmitter battery is deteriorated.
   (3) The system may not operate properly in the following conditions. (If the normal condition returns, operation comes back.)
      (a) If the electronic device with close frequency band is used.
      (b) If the radio device or other system with close frequency band is working inside the vehicle.
      (c) If the window film with effect of blocking radio wave is used.
      (d) If the snow or ice is adhering especially near the wheel or wheel housing.
      (e) If the non-genuine wheel is used.
      (f) If the tire chain is used.

3. Tire pressure warning light indication chart
   NOTE:
   The following table indicates the illumination condition of tire pressure warning light and the system condition after IG ON.

	Immediately after IG ON	Always					
		Tire pressure warning light condition					
	Illuminates for 3 seconds	Light OFF	Light ON	Blink *1	Blink *2	Blink *3	Blink *4
Normal	0	0	-	-	-	-	-
When tire pressure is low	0	-	0	-	-	-	-
During system malfunction	0	-	-	0	-	-	-

	Immediately after IG ON	Always					
		Tire pressure warning light condition					
	Illuminates for 3 seconds	Light OFF	Light ON	Blink *1	Blink *2	Blink *3	Blink *4
When shifting to the test mode	0	-	-	-	0	-	-
When poor contact in ECM connector occurs	-	-	-	0	-	-	-

*1: Blinks for 1 minute at 0.5 seconds interval and then illuminates

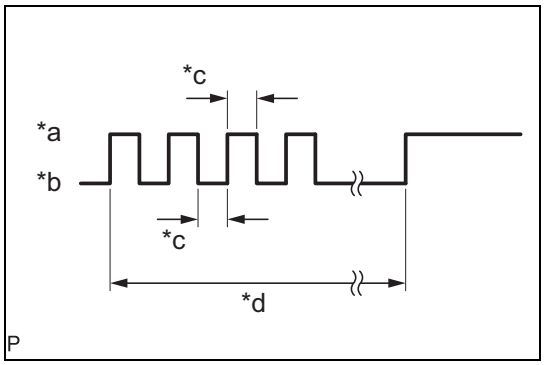

Captions in illustration

*a	ON	*b	OFF
*c	0.5 seconds	*d	1 min.

*2: Blinks at interval of 0.125 seconds

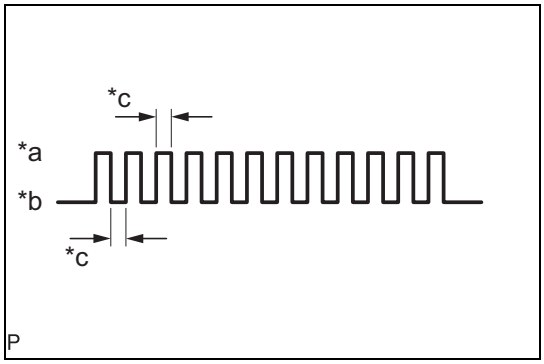

Captions in illustration

*a	ON	*b	OFF
*c	0.125 seconds	-	-

4. Diagnostic codes
   (1) The diagnostic code is recorded in the tire pressure warning ECM/receiver, and output by means of the tire pressure warning light blinking, or SSM4. (Refer to TM - 13)
5. Failsafe function
   (1) If the system malfunction occurs, the tire pressure warning light blinks for 1 minute and then illuminates to warn the driver the system malfunction.
   (2) The result of the diagnostic code is recorded in the tire pressure warning ECM/receiver.

Checking / clearing diagnostic codes

1. Check tire pressure warning ECM/receiver.
   (1) Turn the ignition switch to OFF.
   (2) Connect the SSM4 to the DLC3.
   (3) Turn the ignition switch to ON.
   (4) Turn on the SSM4.
   (5) Enter the following menu. [Each System] / [Tire Pressure Monitor] / [DTC]
   (6) Read diagnostic codes.

2. Checking diagnostic codes (for main body ECM (multiplex network body ECM))
   (1) Turn the ignition switch to OFF.
   (2) Connect the SSM4 to the DLC3.
   (3) Turn the ignition switch to ON.
   (4) Turn on the SSM4.
   (5) Enter the following menu. [Each System] / [Body Control] / [DTC]
   (6) Read diagnostic codes.
3. Clearing diagnostic codes (for the tire pressure warning ECM/receiver)
   NOTE:
   Clear diagnostic codes after resolving the problems.
   (1) Turn the ignition switch to OFF.
   (2) Connect the SSM4 to the DLC3.
   (3) Turn the ignition switch to ON.
   (4) Turn on the SSM4.
   (5) Enter the following menu. [Each System] / [Tire Pressure Monitor] / [DTC] / [Clear Memory]
   (6) Clear diagnostic codes according to the prompt shown in SSM4 display.
4. Clearing diagnostic codes (for main body ECM (multiplex network body ECM))
   NOTE:
   Clear diagnostic codes after resolving the problems.
   (1) Turn the ignition switch to OFF.
   (2) Connect the SSM4 to the DLC3.
   (3) Turn the ignition switch to ON.
   (4) Turn on the SSM4.
   (5) Enter the following menu. [Each System] / [Body Control] / [DTC] / [Clear Memory]
   (6) Clear diagnostic codes according to the prompt shown in SSM4 display.

Data monitor / active test

1. Data monitor
   NOTE:
   By using the SSM4 for reading the data list, it is able to read the values and the status of the switches, sensors, or actuators without removing these parts. The un-invading type check is very useful because it can read an intermittent condition or a signal, without interference with parts or wiring. Diagnostic time can be saved by reading the ECM data monitor information at the initial stage of the troubleshooting.
   CAUTION:
   In the following table, the value listed in the "normal condition" is a reference value. Do not depend too much on reference value when judging if the part is faulty.
   (1) Turn the ignition switch to OFF.
   (2) Connect the SSM4 to the DLC3.
   (3) Turn the ignition switch to ON.
   (4) Turn on the SSM4.
   (5) Enter the following menu. [Each System] / [Tire Pressure Monitor] / [Data monitor]
   (6) Read a data list according to SSM4 display.

TM

Tire pressure monitoring

Tester display	Measured item/Range	Normal condition	Notes for diagnosis
[Check Mode]	Tire pressure warning system mode/ Normal operation mode or test	Normal operation mode: normal mode Test: test mode	-
[Main tire]	Number of main tire ID to be registered/ 4 or 5	Displays 4 or 5.	-
[Initialization Switch] *3	Tire pressure warning reset switch/ ON, OFF	ON: Switch ON OFF: Switch OFF	-
[vehicle speed]	Reading of vehicle speed/ Minimum: 0 km/h {0 MPH}, Maximum: 255 km/h {158 MPH}	Actual vehicle speed	Speed shown in the combination meter ASSY
[ID1 registration code]	Registered ID1 code/ Minimum: 0, Maximum: FFFFFFF*1	Displays the registered ID No. of transmitter ID1	-

Tester display	Measured item/Range	Normal condition	Notes for diagnosis
[ID2 registration code]	Registered ID2 code/ Minimum: 0, Maximum: FFFFFFF*1	Displays the registered ID No. of transmitter ID2	-
[ID3 registration code]	Registered ID3 code/ Minimum: 0, Maximum: FFFFFFF*1	Displays the registered ID No. of transmitter ID3	-
[ID4 registration code]	Registered ID4 code/ Minimum: 0, Maximum: FFFFFFF*1	Displays the registered ID No. of transmitter ID4	-
[ID5 registration code]	Registered ID5 code/ Minimum: 0, Maximum: FFFFFFF*1	Displays the registered ID No. of transmitter ID5	-
[ID1 tire internal temperature]	Temperature of ID1 inside the tire Minimum: -40°C {-40°F}, Maximum: 120°C {248°F}	Actual tire temperature	When -40°C {-40°F} is displayed, data is not received.
[ID2 tire internal temperature]	Temperature of ID2 inside the tire Minimum: -40°C {-40°F}, Maximum: 120°C {248°F}	Actual tire temperature	When -40°C {-40°F} is displayed, data is not received.
[ID3 tire internal temperature]	Temperature of ID3 inside the tire Minimum: -40°C {-40°F}, Maximum: 120°C {248°F}	Actual tire temperature	When -40°C {-40°F} is displayed, data is not received.
[ID4 tire internal temperature]	Temperature of ID4 inside the tire Minimum: -40°C {-40°F}, Maximum: 120°C {248°F}	Actual tire temperature	When -40°C {-40°F} is displayed, data is not received.
[ID5 tire internal temperature]	Temperature of ID5 inside the tire Minimum: -40°C {-40°F}, Maximum: 120°C {248°F}	Actual tire temperature	When -40°C {-40°F} is displayed, data is not received.
[ID1 battery voltage]	ID1 battery voltage/ 1.6 V or more, or less than 1.6 V	1.6 V or more (normal)	-
[ID2 battery voltage]	ID2 battery voltage/ 1.6 V or more, or less than 1.6 V	1.6 V or more (normal)	-
[ID3 battery voltage]	ID3 battery voltage/ 1.6 V or more, or less than 1.6 V	1.6 V or more (normal)	-
[ID4 battery voltage]	ID4 battery voltage/ 1.6 V or more, or less than 1.6 V	1.6 V or more (normal)	-
[ID5 battery voltage] *3	ID5 battery voltage/ 1.6 V or more, or less than 1.6 V	1.6 V or more (normal)	-
[Initialization SW setting information] *3	Tire pressure warning reset switch/setting information/ (with or without)	None	-
[ID1 tire pressure]	ID1 tire pressure/ Minimum: absolute pressure / 50 kPa {0.5 kgf/cm^2, 7 psi}, relative pressure / -50 kPa {-0.5 kgf/cm^2, -7 psi} Maximum: absolute pressure / 480 kPa {4.9 kgf/cm^2, 70 psi}, relative pressure / 380 kPa {3.9 kgf/cm^2, 55 psi}	Actual tire pressure	If 50 kPa {0.5 kgf/cm^2, 7 psi} is shown as the absolute pressure, or -50 kPa {-0.5 kgf/cm^2, -7 psi} is shown as a relative pressure, data is not received. * 2
[ID2 tire pressure]	ID2 tire pressure/ Minimum: absolute pressure / 50 kPa {0.5 kgf/cm^2, 7 psi}, relative pressure / -50 kPa {-0.5 kgf/cm^2, -7 psi} Maximum: absolute pressure / 480 kPa {4.9 kgf/cm^2, 70 psi}, relative pressure / 380 kPa {3.9 kgf/cm^2, 55 psi}	Actual tire pressure	If 50 kPa {0.5 kgf/cm^2, 7 psi} is shown as the absolute pressure, or -50 kPa {-0.5 kgf/cm^2, -7 psi} is shown as a relative pressure, data is not received. * 2
[ID3 tire pressure]	ID3 tire pressure/ Minimum: absolute pressure / 50 kPa {0.5 kgf/cm^2, 7 psi}, relative pressure / -50 kPa {-0.5 kgf/cm^2, -7 psi} Maximum: absolute pressure / 480 kPa {4.9 kgf/cm^2, 70 psi}, relative pressure / 380 kPa {3.9 kgf/cm^2, 55 psi}	Actual tire pressure	If 50 kPa {0.5 kgf/cm^2, 7 psi} is shown as the absolute pressure, or -50 kPa {-0.5 kgf/cm^2, -7 psi} is shown as a relative pressure, data is not received. * 2

Tester display	Measured item/Range	Normal condition	Notes for diagnosis
[ID4 tire pressure]	ID4 tire pressure/ Minimum: absolute pressure / 50 kPa {0.5 kgf/cm^2, 7 psi}, relative pressure / -50 kPa {-0.5 kgf/cm^2, -7 psi} Maximum: absolute pressure / 480 kPa {4.9 kgf/cm^2, 70 psi}, relative pressure / 380 kPa {3.9 kgf/cm^2, 55 psi}	Actual tire pressure	If 50 kPa {0.5 kgf/cm^2, 7 psi} is shown as the absolute pressure, or -50 kPa {-0.5 kgf/cm^2, -7 psi} is shown as a relative pressure, data is not received. * 2
[ID5 tire pressure] *3	ID5 tire pressure/ Minimum: absolute pressure / 50 kPa {0.5 kgf/cm^2, 7 psi}, relative pressure / -50 kPa {-0.5 kgf/cm^2, -7 psi} Maximum: absolute pressure / 480 kPa {4.9 kgf/cm^2, 70 psi}, relative pressure / 380 kPa {3.9 kgf/cm^2, 55 psi}	Actual tire pressure	If 50 kPa {0.5 kgf/cm^2, 7 psi} is shown as the absolute pressure, or -50 kPa {-0.5 kgf/cm^2, -7 psi} is shown as a relative pressure, data is not received. * 2
[ID1 low air pressure warning pressure threshold (initialization processing value)]	Low air pressure ID1 initial threshold/ Minimum: absolute pressure / 50 kPa {0.5 kgf/cm^2, 7 psi}, relative pressure / -50 kPa {-0.5 kgf/cm^2, -7 psi} Maximum: absolute pressure / 480 kPa {4.9 kgf/cm^2, 70 psi}, relative pressure / 380 kPa {3.9 kgf/cm^2, 55 psi}	Tire pressure after initialization	-
[ID2 low air pressure warning pressure threshold (initialization processing value)]	Low air pressure ID2 initial threshold/ Minimum: absolute pressure / 50 kPa {0.5 kgf/cm^2, 7 psi}, relative pressure / -50 kPa {-0.5 kgf/cm^2, -7 psi} Maximum: absolute pressure / 480 kPa {4.9 kgf/cm^2, 70 psi}, relative pressure / 380 kPa {3.9 kgf/cm^2, 55 psi}	Tire pressure after initialization	-
[ID3 low air pressure warning pressure threshold (initialization processing value)]	Low air pressure ID3 initial threshold/ Minimum: absolute pressure / 50 kPa {0.5 kgf/cm^2, 7 psi}, relative pressure / -50 kPa {-0.5 kgf/cm^2, -7 psi} Maximum: absolute pressure / 480 kPa {4.9 kgf/cm^2, 70 psi}, relative pressure / 380 kPa {3.9 kgf/cm^2, 55 psi}	Tire pressure after initialization	-
[ID4 low air pressure warning pressure threshold (initialization processing value)]	Low air pressure ID4 initial threshold/ Minimum: absolute pressure / 50 kPa {0.5 kgf/cm^2, 7 psi}, relative pressure / -50 kPa {-0.5 kgf/cm^2, -7 psi} Maximum: absolute pressure / 480 kPa {4.9 kgf/cm^2, 70 psi}, relative pressure / 380 kPa {3.9 kgf/cm^2, 55 psi}	Tire pressure after initialization	-
[ID5 low air pressure warning pressure threshold (initialization processing value)] *3	Low air pressure ID5 initial threshold/ Minimum: absolute pressure / 50 kPa {0.5 kgf/cm^2, 7 psi}, relative pressure / -50 kPa {-0.5 kgf/cm^2, -7 psi} Maximum: absolute pressure / 480 kPa {4.9 kgf/cm^2, 70 psi}, relative pressure / 380 kPa {3.9 kgf/cm^2, 55 psi}	Tire pressure after initialization	-
[Number of Diag.Code(0-255)]	Number of diagnostic code, record/ minutes: 0, Maximum: 255	Minimum: 0, Maximum: -	-

*1: Displayed only when ID No. is not registered.

*2: It takes several minutes until the data is displayed. If the data is not displayed, perform troubleshooting according to the procedures from diagnostic code C2121 to C2124. (Refer to TM - 23)

*3: This item is displayed in SSM4, but it is not used in this vehicle.

2. Active test

NOTE:

If SSM4 is used when performing active test, the relay, VSV, actuator etc. can be operated without removing parts. This functional inspection method is very useful because this can confirm the signal related to the condition or can find the malfunction

part without removing the parts or wiring. Performing the active test in the first stage of the troubleshooting, the diagnosis time can be shortened. The information for ECM data monitor can be displayed during active test.

(1) Turn the ignition switch to OFF.
(2) Connect the SSM4 to the DLC3.
(3) Turn the ignition switch to ON.
(4) Turn on the SSM4.
(5) Enter the following menu. [Each System] / [Combination Meter] / [Active Test] / [Lamp check]
(6) Check the operation by referring to the following table.

Combination meter

Tester display	Test part	Control range	Notes for diagnosis
[TPMS warning]	Tire pressure warning light	Tire pressure warning light OFF or ON	Confirm the vehicle is parked, and engine is idling.

List of diagnostic codes

NOTE:

If diagnostic codes are displayed while checking the DTC, check the circuit indicated by that code. For details concerning each code, refer to "Diagnostic codes" in the list for diagnostic codes.

Tire pressure warning ECM/receiver

Diagnostic codes	Diagnostic items	Reference pages
C2111	[Transmitter ID1 Operation Stop]	TM - 20
C2112	[Transmitter ID2 Operation Stop]	TM - 20
C2113	[Transmitter ID3 Operation Stop]	TM - 20
C2114	[Transmitter ID3 Operation Stop]	TM - 20
C2121	[No Signal from Transmitter ID1 in Main Mode]	TM - 23
C2122	[No Signal from Transmitter ID2 in Main Mode]	TM - 23
C2123	[No Signal from Transmitter ID3 in Main Mode]	TM - 23
C2124	[No Signal from Transmitter ID4 in Main Mode]	TM - 23
C2126	[Transmitter ID Check]	TM - 30
C2141	[Transmitter ID1 Error]	TM - 36
C2142	[Transmitter ID2 Error]	TM - 36
C2143	[Transmitter ID3 Error]	TM - 36
C2144	[Transmitter ID4 Error]	TM - 36
C2171	[Transmitter ID not Registered]	TM - 39
C2176	[Receiver Error]	TM - 42
C2179	[Lost Communication (BERKES Communication)]	TM - 42
C2181	[Transmitter ID1 not Received (Test Mode DTC(s))]	TM - 23
C2182	[Transmitter ID2 not Received (Test Mode DTC(s))]	TM - 23
C2183	[Transmitter ID3 not Received (Test Mode DTC(s))]	TM - 23
C2184	[Transmitter ID4 not Received (Test Mode DTC(s))]	TM - 23

Main body ECM (multiplex network body ECM)

Diagnostic codes	Diagnostic items	Reference pages
B1247	[Tire pressure ECU communication suspension]	TM - 17

TM

DTC B1247 Tire pressure ECU communication suspension

Circuit description

Main body ECM (multiplex network body computer) and tire pressure warning ECM/receiver communicates via direct wiring.

DTC No.	DTC detecting condition	Faulty part
B1247	When the suitable RDA signal is not received within 10 seconds after PRG signal is sent from the main body ECM (multiplex network body computer)	• Tire pressure warning ECM/receiver • Wiring harness or connector • Main body ECM (multiplex network body ECM)

Circuit figure

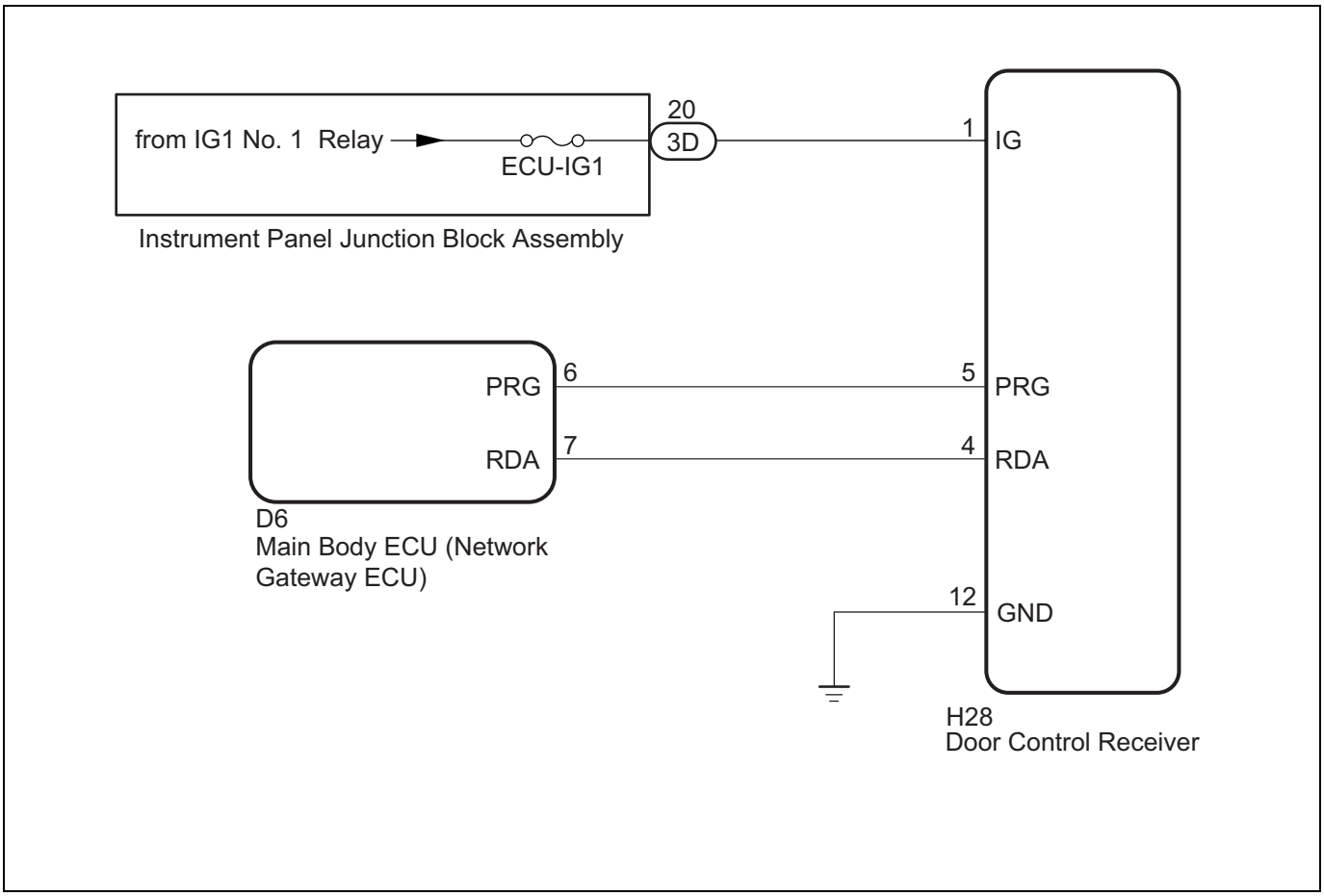

Inspection steps

CAUTION:

- If the tire pressure warning ECM/receiver is replaced, record all ID of the tire pressure warning valve/transmitter using SSM4 in advance.
- If the tire pressure warning ECM is replaced, be sure to register the transmitter ID to the tire pressure warning ECM. (Refer to TM - 10)
- If the tire pressure warning ECM/receiver is replaced, register the recognition code after work (refer to TM - 10) and register the transmitter ID.

NOTE:

Before performing the following inspection steps, check the fuses related to this system.

TM

1	Check wire harness and connector (main body ECM (multiplex network body ECM) - tire pressure warning ECM/receiver).

(1) Disconnect the tire pressure warning ECM/receiver H28 connector and the main body ECM (multiplex network body ECM) D6 connector.

(2) Measure the resistance according to the following table.

Normal resistance

Tester connection	Condition	Specific condition
H28-4 (RDA) - D6-7	Always	1 Ωor less
H28-5 (RPG) - D6-6	Always	1 Ωor less
D6-7 - chassis ground	Always	10 k Ωor more
D6-6 - chassis ground	Always	10 k Ωor more

NG → Repair or replacement of wiring harness or connector

OK

2	Check harness and connector (power supply of tire pressure warning ECM/receiver).

(1) Measure the resistance according to the following table.
Normal resistance

Tester connection	Condition	Specific condition
H28-12 (GND) - chassis ground	Always	1 Ωor less

(2) Measure the voltage according to the following table.
Standard voltage

Tester connection	Condition	Specific condition
H28-1 (IG) - chassis ground	Always	11 to 14 V

NG → Repair or replacement of wiring harness or connector

OK

3	Replace tire pressure warning ECM/receiver.

(1) Replace the tire pressure warning ECM/receiver.

Next

4	Check diagnostic code output (B1247).

(1) Clear diagnostic codes. (Refer to TM - 13)
(2) Turn the ignition switch to OFF.
(3) Turn the ignition switch to ON.
(4) Check diagnostic codes. (Refer to TM - 13)
Criteria: DTC B1247 is not output.

NG → Replace the main body ECM (multiplex network body ECM).

OK

Complete

DTC	C2111	Transmitter ID1 Operation Stop

DTC	C2112	Transmitter ID2 Operation Stop

DTC	C2113	Transmitter ID3 Operation Stop

DTC	C2114	Transmitter ID4 Operation Stop

Circuit description

The tire pressure warning valve/transmitter installed on the tire & wheel measures the tire pressure. The measured value is sent to the tire pressure warning ECM/receiver as the form of radio wave. Tire pressure warning ECM/receiver compares the measured air pressure with the threshold of air pressure. If the measured value of the air pressure is less than threshold, the tire pressure warning light in the combination meter illuminates. If diagnostic codes are output, the tire pressure warning valve/transmitter of the tire pressure warning system is in stop condition temporarily. In this case, decrease the tire pressure rapidly to make the tire pressure warning valve/transmitter output the signal to the tire pressure warning ECM/receiver. This cancels the stop condition and clears diagnostic codes.

DTC No.	DTC detecting condition	Faulty part
C2111 C2112 C2113 C2114	When tire pressure warning valve/transmitter does not send signal	• Tire pressure warning valve/transmitter • Tire pressure warning ECM/receiver

NOTE:

Faulty tire pressure warning valve/transmitter can not be identified by output of diagnostic codes. Perform this procedure to identify the faulty part.

Circuit figure

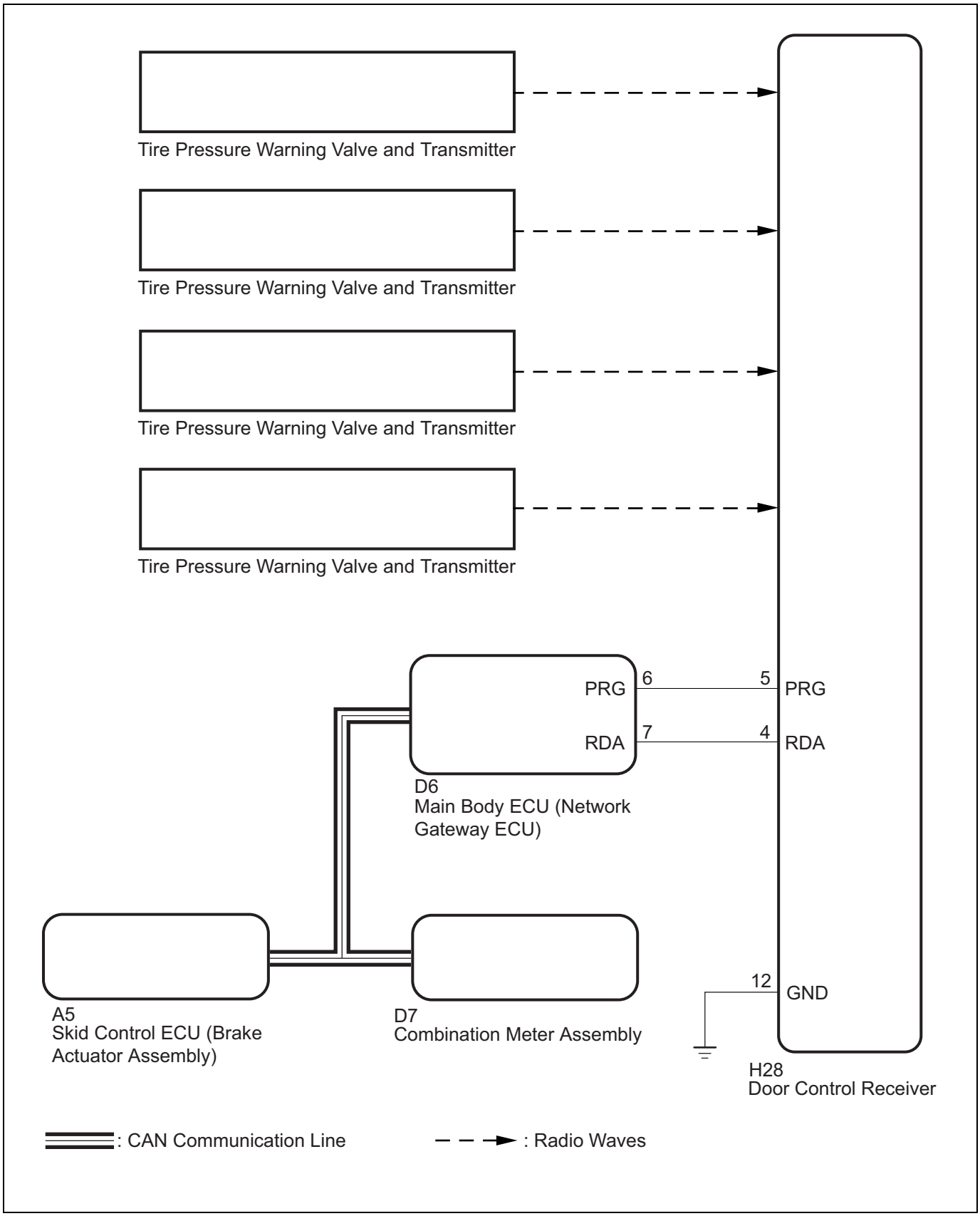

Inspection steps

1	Compulsorily send the transmitter ID of all the wheels.

(1) Adjust tire pressures to the specified pressure.
(2) Turn the ignition switch to OFF.
(3) Connect the SSM4 to the DLC3.
(4) Turn the ignition switch to ON.
(5) Turn on the SSM4.
(6) Enter the following menu. [Each System] / [Tire Pressure Monitor] / [Data monitor]
(7) Check the value by referring to the following table.

Tire pressure monitoring

Tester display	Measured item/Range	Normal condition	Notes for diagnosis
[ID1 tire pressure]	ID1 tire pressure/ Minimum: absolute pressure / 50 kPa {0.5 kgf/cm^2, 7 psi}, relative pressure / -50 kPa {-0.5 kgf/cm^2, -7 psi} Maximum: absolute pressure / 480 kPa {4.9 kgf/cm^2, 70 psi}, relative pressure / 380 kPa {3.9 kgf/cm^2, 55 psi}	Actual tire pressure	If 50 kPa {0.5 kgf/cm^2, 7 psi} is shown as the absolute pressure, or -50 kPa {-0.5 kgf/cm^2, -7 psi} is shown as a relative pressure, data is not received. *
[ID2 tire pressure]	ID2 tire pressure/ Minimum: absolute pressure / 50 kPa {0.5 kgf/cm^2, 7 psi}, relative pressure / -50 kPa {-0.5 kgf/cm^2, -7 psi} Maximum: absolute pressure / 480 kPa {4.9 kgf/cm^2, 70 psi}, relative pressure / 380 kPa {3.9 kgf/cm^2, 55 psi}	Actual tire pressure	If 50 kPa {0.5 kgf/cm^2, 7 psi} is shown as the absolute pressure, or -50 kPa {-0.5 kgf/cm^2, -7 psi} is shown as a relative pressure, data is not received. *
[ID3 tire pressure]	ID3 tire pressure/ Minimum: absolute pressure / 50 kPa {0.5 kgf/cm^2, 7 psi}, relative pressure / -50 kPa {-0.5 kgf/cm^2, -7 psi} Maximum: absolute pressure / 480 kPa {4.9 kgf/cm^2, 70 psi}, relative pressure / 380 kPa {3.9 kgf/cm^2, 55 psi}	Actual tire pressure	If 50 kPa {0.5 kgf/cm^2, 7 psi} is shown as the absolute pressure, or -50 kPa {-0.5 kgf/cm^2, -7 psi} is shown as a relative pressure, data is not received. *
[ID4 tire pressure]	ID4 tire pressure/ Minimum: absolute pressure / 50 kPa {0.5 kgf/cm^2, 7 psi}, relative pressure / -50 kPa {-0.5 kgf/cm^2, -7 psi} Maximum: absolute pressure / 480 kPa {4.9 kgf/cm^2, 70 psi}, relative pressure / 380 kPa {3.9 kgf/cm^2, 55 psi}	Actual tire pressure	If 50 kPa {0.5 kgf/cm^2, 7 psi} is shown as the absolute pressure, or -50 kPa {-0.5 kgf/cm^2, -7 psi} is shown as a relative pressure, data is not received. *

*: It takes several minutes until the data is displayed. If the data is not displayed, perform troubleshooting according to the procedures from diagnostic code C2121 to C2124. (Refer to TM - 23)

(8) Deflate air pressure in each tire at least 40 kPa {0.4 kgf/cm^2, 5.8 psi} within 30 seconds.

(a) Confirm that the air pressure of each tire displayed in SSM4 has been changed.

Criteria: The air pressure of each tire displayed in SSM4 has been changed to tire pressure value.

CAUTION:

- It may take approximately 2 to 3 minutes for updating the tire pressure data.
- If the "Transmitter tire pressure" data does not change, rotate the tire by 90° to 270° and re-confirm. Then decrease the tire pressure rapidly and re-confirm data.

(b) Adjust the tire pressure to the specified pressure after confirming that all tire pressure data in SSM4 are updated.

NOTE:

If the tire pressure data displayed in SSM4 has not been updated after re-confirmation, check to find the other problems. (Refer to TM - 23)

NG → Go to the transmitter/receiver check procedure. (refer to TM - 23)

OK

Complete

DTC	C2121	No Signal from Transmitter ID1 in Main Mode
DTC	C2122	No Signal from Transmitter ID2 in Main Mode
DTC	C2123	No Signal from Transmitter ID3 in Main Mode
DTC	C2124	No Signal from Transmitter ID4 in Main Mode
DTC	C2181	ID1 transmission data not received (test diagnosis)
DTC	C2182	ID2 transmission data not received (test diagnosis)
DTC	C2183	ID3 transmission data not received (test diagnosis)
DTC	C2184	ID4 transmission data not received (test diagnosis)

Circuit description

The tire pressure warning valve/transmitter installed on the tire & wheel measures the tire pressure. The measured value is sent to the tire pressure warning ECM/receiver as the form of radio wave. Tire pressure warning ECM/receiver compares the measured air pressure with the threshold of air pressure. If the measured value of the air pressure is less than threshold, the tire pressure warning light in the combination meter illuminates.

The tire pressure warning valve/transmitter sends a radio wave continuously to the tire pressure warning ECM/receiver. In the following situation, diagnostic codes may be output because the tire pressure warning ECM/receiver cannot receive the signal from the tire pressure warning valve/transmitter.

- There are devices or facilities that use the radio wave with close frequency band, near the vehicle.
- There are devices that use the radio wave with close frequency band, inside the vehicle.
- The tire pressure warning valve/transmitter ID that is registered is wrong.
- The wheel (with a tire) from other vehicles is attached.

NOTE:
These diagnostic codes are detected when the tire pressure warning ECM/receiver can not receive the radio wave from the tire pressure warning valve/transmitter and for 20 minutes or longer while the vehicle speed is 37 km/h {23 MPH} or more.
To clear DTC from C2121 to C2124, use SSM4. To clear DTC from C2181 to C2184, the tire pressure warning valve/transmitter needs to send the compulsory signal, or the test mode side operation is necessary. DTC from C2181 to C2184 are output only during test mode.

DTC No.	DTC detecting condition	Faulty part
C2121 C2122 C2123 C2124	Following conditions are applied: 1. When all following conditions are applied: – When the tire pressure warning valve/transmitter does not enter stop mode. – When the transmitter ID is not received from the tire pressure warning valve/transmitter. – When the vehicle speed is 37 km/h {23 MPH} or more for 20 minutes or more, or when the vehicle speed signal is not received. 2. When both conditions are applied: – When the tire pressure warning valve/transmitter does not enter stop mode. – When the transmitter ID is not received from the tire pressure warning valve/transmitter for 20 minutes or more.	• Tire pressure warning valve/transmitter • Tire pressure warning ECM/receiver
C2181 C2182 C2183 C2184	Perform the test mode.	• Tire pressure warning valve/transmitter • Tire pressure warning ECM/receiver

CAUTION:
DTC C2179 has also been set at the same time when DTC from C2121 to C2124 have been set. In this case, first troubleshoot the DTC from C2121 to C2124, and then C2179.
NOTE:
Faulty tire pressure warning valve/transmitter can not be identified by output of diagnostic codes. Perform this procedure to identify the faulty part.

Circuit figure

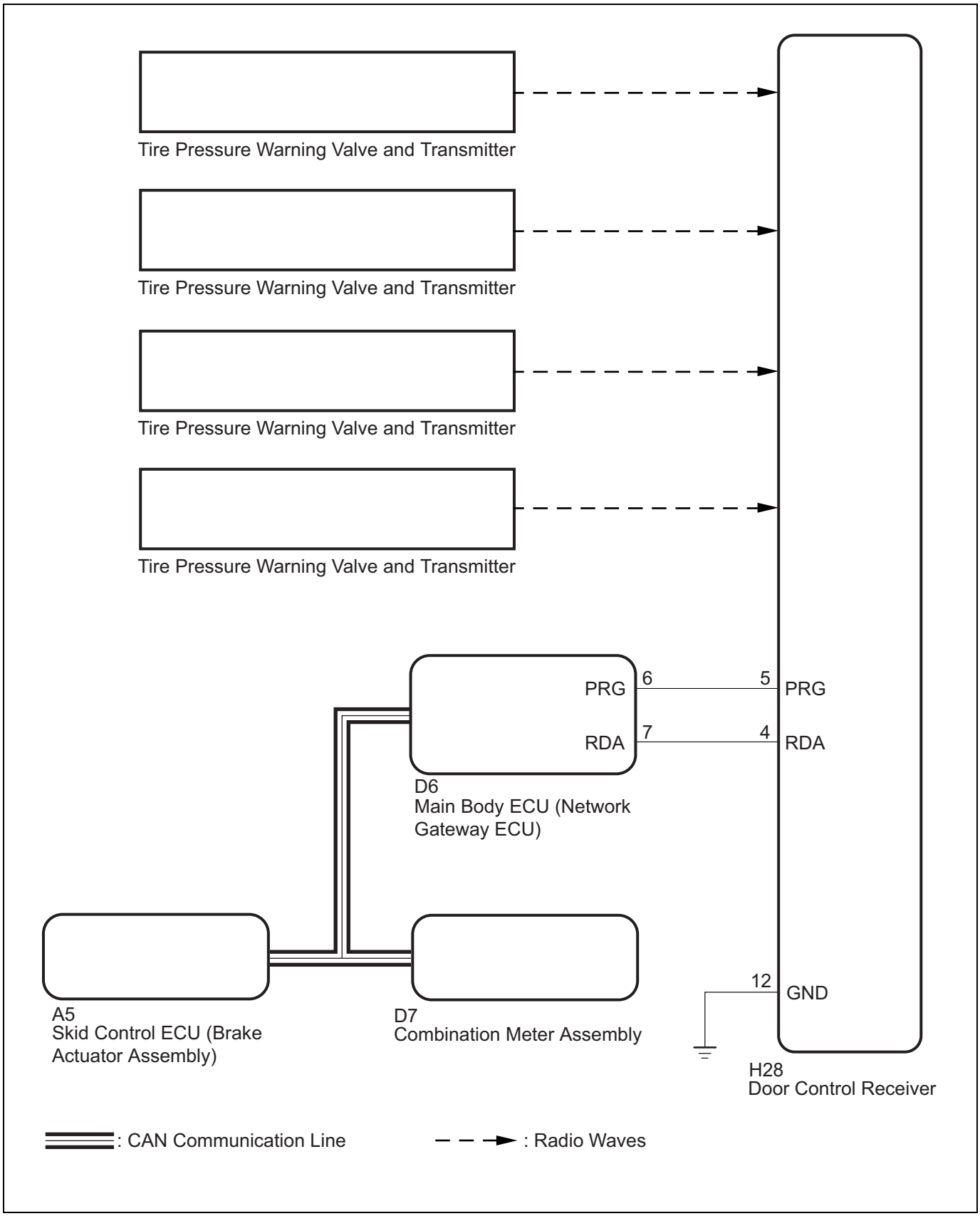

Inspection steps

CAUTION:

- If the tire pressure warning ECM is replaced, record all ID of the tire pressure warning valve/transmitter using SSM4 in advance.

- If the tire pressure warning ECM/valve/transmitter is replaced, be sure to register the transmitter ID to the tire pressure warning ECM. (Refer to TM - 10)
- If the tire pressure warning ECM/receiver is replaced, register the recognition code after work (refer to TM - 10) and register the transmitter ID.

1	Check frequency receive condition.

(1) Check whether the vehicle is parked at the area of the following conditions.
  (a) There are devices or facilities that use the radio wave with close frequency band, near the vehicle.
  NOTE:
  The tire pressure warning light illuminates only in a certain specific area, when the vehicle is parking at the area described above.
  (b) There are devices that use the radio wave with close frequency band, inside the vehicle.
  Criteria: There are not devices or facilities that use the radio wave with close frequency band, near the vehicle.
  NOTE:
  The radio wave may be interfered with by the surrounding environment or the devices that the user attached.

NG → Check that user installed such device.

OK

2	Identify transmitter corresponding to DTC.

(1) Adjust tire pressures to the specified pressure.
(2) Turn the ignition switch to OFF.
(3) Connect the SSM4 to the DLC3.
(4) Turn the ignition switch to ON.
(5) Turn on the SSM4.
(6) Enter the following menu. [Each System] / [Tire Pressure Monitor] / [Data monitor]
(7) Check the value by referring to the following table.

Tire pressure monitoring

Tester display	Measured item/Range	Normal condition	Notes for diagnosis
[ID1 tire pressure]	ID1 tire pressure/ Minimum: absolute pressure / 50 kPa {0.5 kgf/cm^2, 7 psi}, relative pressure / -50 kPa {-0.5 kgf/cm^2, -7 psi} Maximum: absolute pressure / 480 kPa {4.9 kgf/cm^2, 70 psi}, relative pressure / 380 kPa {3.9 kgf/cm^2, 55 psi}	Actual tire pressure	If 50 kPa {0.5 kgf/cm^2, 7 psi} is shown as the absolute pressure, or -50 kPa {-0.5 kgf/cm^2, -7 psi} is shown as a relative pressure, data is not received. *
[ID2 tire pressure]	ID2 tire pressure/ Minimum: absolute pressure / 50 kPa {0.5 kgf/cm^2, 7 psi}, relative pressure / -50 kPa {-0.5 kgf/cm^2, -7 psi} Maximum: absolute pressure / 480 kPa {4.9 kgf/cm^2, 70 psi}, relative pressure / 380 kPa {3.9 kgf/cm^2, 55 psi}	Actual tire pressure	If 50 kPa {0.5 kgf/cm^2, 7 psi} is shown as the absolute pressure, or -50 kPa {-0.5 kgf/cm^2, -7 psi} is shown as a relative pressure, data is not received. *

Tester display	Measured item/Range	Normal condition	Notes for diagnosis
[ID3 tire pressure]	ID3 tire pressure/ Minimum: absolute pressure / 50 kPa {0.5 kgf/cm^2, 7 psi}, relative pressure / -50 kPa {-0.5 kgf/cm^2, -7 psi} Maximum: absolute pressure / 480 kPa {4.9 kgf/cm^2, 70 psi}, relative pressure / 380 kPa {3.9 kgf/cm^2, 55 psi}	Actual tire pressure	If 50 kPa {0.5 kgf/cm^2, 7 psi} is shown as the absolute pressure, or -50 kPa {-0.5 kgf/cm^2, -7 psi} is shown as a relative pressure, data is not received. *
[ID4 tire pressure]	ID4 tire pressure/ Minimum: absolute pressure / 50 kPa {0.5 kgf/cm^2, 7 psi}, relative pressure / -50 kPa {-0.5 kgf/cm^2, -7 psi} Maximum: absolute pressure / 480 kPa {4.9 kgf/cm^2, 70 psi}, relative pressure / 380 kPa {3.9 kgf/cm^2, 55 psi}	Actual tire pressure	If 50 kPa {0.5 kgf/cm^2, 7 psi} is shown as the absolute pressure, or -50 kPa {-0.5 kgf/cm^2, -7 psi} is shown as a relative pressure, data is not received. *

*: It takes several minutes until the data is displayed.

(8) Deflate air pressure in each tire at least 40 kPa {0.4 kgf/cm^2, 5.8 psi} within 30 seconds.
(9) Confirm data list.
CAUTION:
- It may take approximately 2 to 3 minutes for updating the tire pressure data.
- If the "Transmitter tire pressure" data does not change, rotate the tire by 90° to 270° and re-confirm. Then decrease the tire pressure rapidly and re-confirm data.
- Record the transmitter ID of "ID tire pressure" data corresponding to each tire.

(10) Once the "ID tire pressure" data of the tire (from ID1 to ID4) is updated, repeat these steps one by one. Identify transmitter corresponding to DTC.

Result

Result	Proceed to
One or more transmitters are abnormal.	A
All normal	B

B → Complete

A

3	Confirm transmitter ID.

(1) Turn the ignition switch to OFF.
(2) Connect the SSM4 to the DLC3.
(3) Turn the ignition switch to ON.
(4) Turn on the SSM4.
(5) Enter the following menu. [Each System] / [Tire Pressure Monitor] / [Data monitor]
(6) Check the value by referring to the following table.

TM

Tire pressure monitoring

Tester display	Measured item/Range	Normal condition	Notes for diagnosis
[ID1 registration code]	Registered ID1 code/ Minimum: 0, Maximum: FFFFFFF*	Displays the registered ID No. of transmitter ID1	-
[ID2 registration code]	Registered ID2 code/ Minimum: 0, Maximum: FFFFFFF*	Displays the registered ID No. of transmitter ID2	-
[ID3 registration code]	Registered ID3 code/ Minimum: 0, Maximum: FFFFFFF*	Displays the registered ID No. of transmitter ID3	-
[ID4 registration code]	Registered ID4 code/ Minimum: 0, Maximum: FFFFFFF*	Displays the registered ID No. of transmitter ID4	-

*: Displayed only when ID No. is not registered.

(7) Confirm that the entered ID matches with the displayed ID.

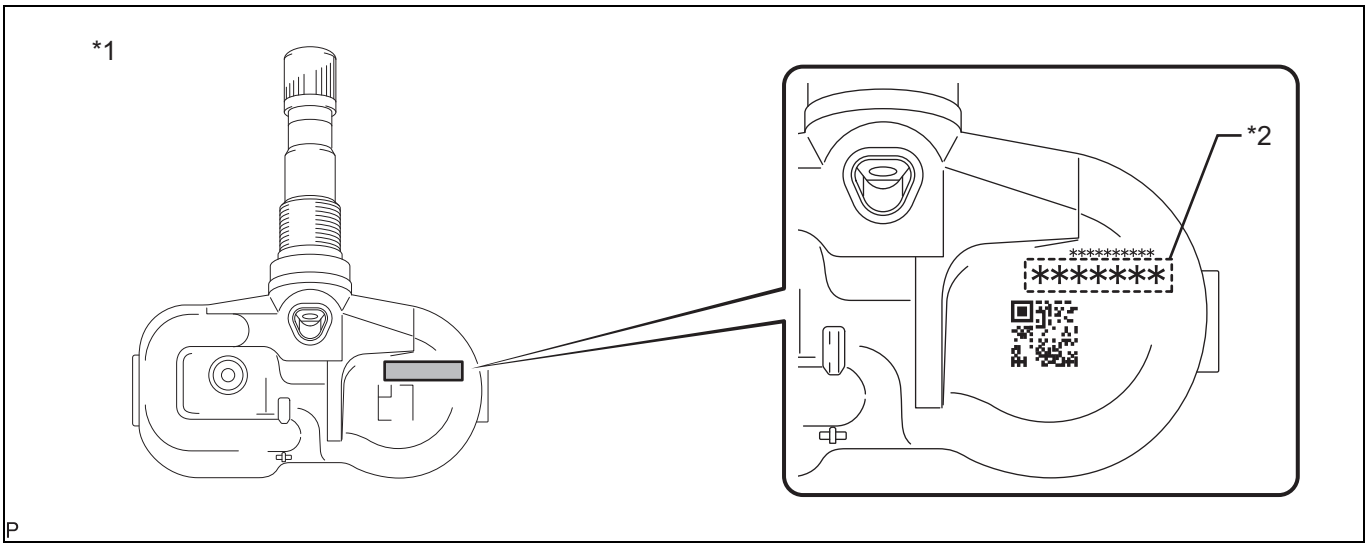

Captions in illustration

*1	Tire pressure warning valve/transmitter	*2	Transmitter ID (7 digits number)

(8) Confirm that the transmitter ID number matches with recorded transmitter ID.

Result

Result	Proceed to
ID matches.	A
ID does not match.	B

B → Go to Step 5.

A

4	Replace tire pressure warning valve/transmitter.

(1) Replace the tire pressure warning valve/transmitter.

Next

5	Register the transmitter ID.

(1) Register the ID. (Refer to TM - 10)

Next

6	Confirm tire pressure (data list).

(1) Turn the ignition switch to OFF.
(2) Connect the SSM4 to the DLC3.
(3) Turn the ignition switch to ON.
(4) Turn on the SSM4.
(5) Enter the following menu. [Each System] / [Tire Pressure Monitor] / [Data monitor]
(6) Check the value by referring to the following table.

Tire pressure monitoring

Tester display	Measured item/Range	Normal condition	Notes for diagnosis
[ID1 tire pressure]	ID1 tire pressure/ Minimum: absolute pressure / 50 kPa {0.5 kgf/cm^2, 7 psi}, relative pressure / -50 kPa {-0.5 kgf/cm^2, -7 psi} Maximum: absolute pressure / 480 kPa {4.9 kgf/cm^2, 70 psi}, relative pressure / 380 kPa {3.9 kgf/cm^2, 55 psi}	Actual tire pressure	If 50 kPa {0.5 kgf/cm^2, 7 psi} is shown as the absolute pressure, or -50 kPa {-0.5 kgf/cm^2, -7 psi} is shown as a relative pressure, data is not received. *
[ID2 tire pressure]	ID2 tire pressure/ Minimum: absolute pressure / 50 kPa {0.5 kgf/cm^2, 7 psi}, relative pressure / -50 kPa {-0.5 kgf/cm^2, -7 psi} Maximum: absolute pressure / 480 kPa {4.9 kgf/cm^2, 70 psi}, relative pressure / 380 kPa {3.9 kgf/cm^2, 55 psi}	Actual tire pressure	If 50 kPa {0.5 kgf/cm^2, 7 psi} is shown as the absolute pressure, or -50 kPa {-0.5 kgf/cm^2, -7 psi} is shown as a relative pressure, data is not received. *
[ID3 tire pressure]	ID3 tire pressure/ Minimum: absolute pressure / 50 kPa {0.5 kgf/cm^2, 7 psi}, relative pressure / -50 kPa {-0.5 kgf/cm^2, -7 psi} Maximum: absolute pressure / 480 kPa {4.9 kgf/cm^2, 70 psi}, relative pressure / 380 kPa {3.9 kgf/cm^2, 55 psi}	Actual tire pressure	If 50 kPa {0.5 kgf/cm^2, 7 psi} is shown as the absolute pressure, or -50 kPa {-0.5 kgf/cm^2, -7 psi} is shown as a relative pressure, data is not received. *
[ID4 tire pressure]	ID4 tire pressure/ Minimum: absolute pressure / 50 kPa {0.5 kgf/cm^2, 7 psi}, relative pressure / -50 kPa {-0.5 kgf/cm^2, -7 psi} Maximum: absolute pressure / 480 kPa {4.9 kgf/cm^2, 70 psi}, relative pressure / 380 kPa {3.9 kgf/cm^2, 55 psi}	Actual tire pressure	If 50 kPa {0.5 kgf/cm^2, 7 psi} is shown as the absolute pressure, or -50 kPa {-0.5 kgf/cm^2, -7 psi} is shown as a relative pressure, data is not received. *

*: It takes several minutes until the data is displayed.

NOTE:
If the "Transmitter tire pressure" data does not change, rotate the tire by 90° to 270° and re-confirm. Then decrease the tire pressure rapidly and re-confirm data.

TM

Result

Result	Proceed to
The tire pressure data is not displayed.	A
The tire pressures data matches with the specified value.	B

B → Complete

A

Replace tire pressure warning ECM/receiver.

DTC	C2126	Transmitter ID Check

Circuit description

After registration of the tire pressure warning valve/transmitter ID is finished, the tire pressure warning ECM/receiver detects diagnostic code C2126 and blinks the tire pressure warning light for 1 minute, and then illuminates it.

When the tire pressure warning ECM/receiver receives the data from all tire pressure warning valve/transmitter which ID has been registered to, it judges as normal, and then turn off the tire pressure warning light.

DTC No.	DTC detecting condition	Faulty part
C2126	After ID registration, when the radio wave is not received from the transmitter whose ID is stored in the ECM	• ID that is registered is wrong • Tire pressure warning valve/transmitter • Tire pressure warning ECM/receiver

NOTE:

Diagnostic code C2126 is output to prevent delivery to the user of the vehicle with the wrong ID registration. After ID registration of the tire pressure warning valve/transmitter has been finished, the wrong ID registration may be the cause when the tire pressure warning light does not go off after a while.

Circuit figure

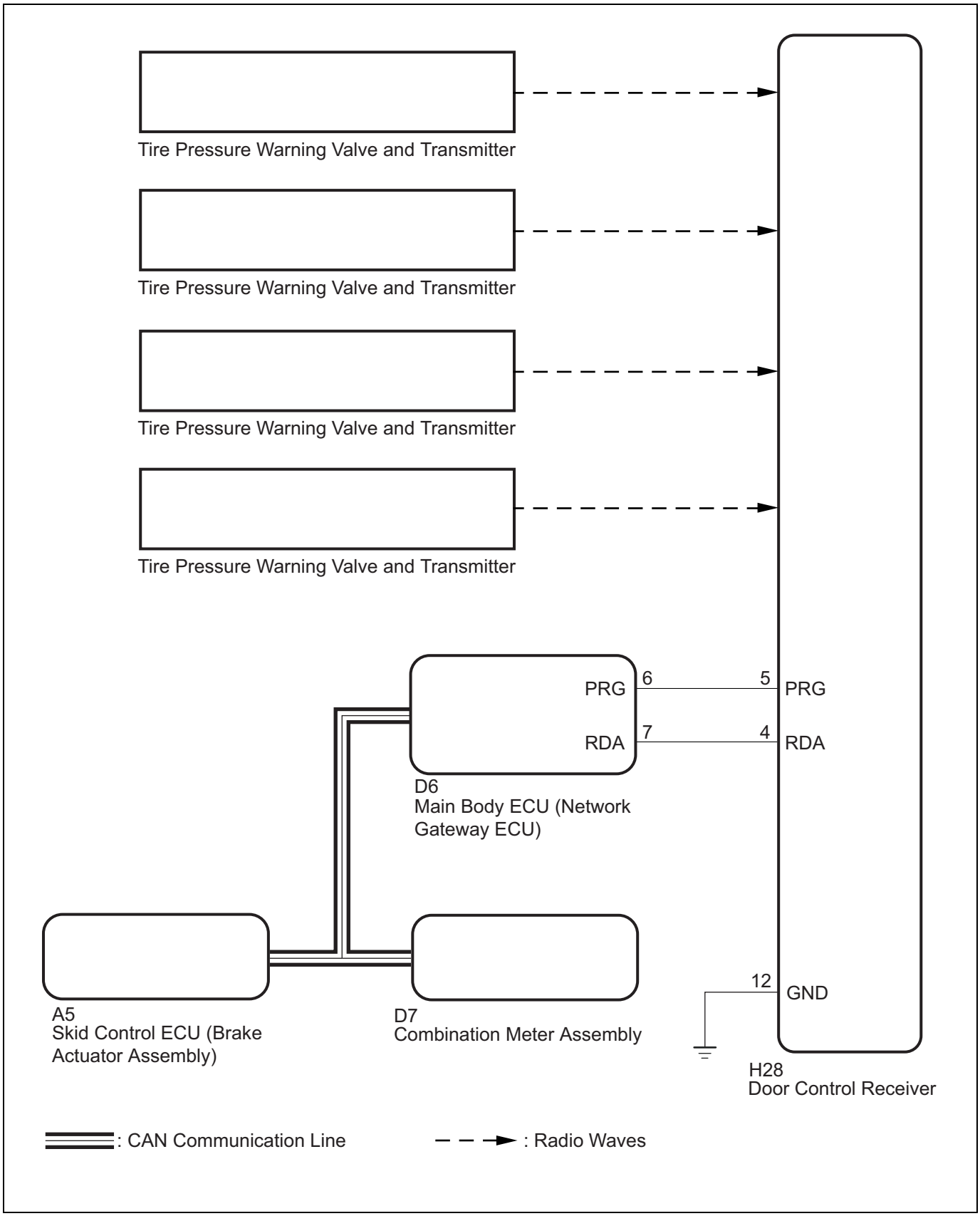

Inspection steps

CAUTION:

- If the tire pressure warning ECM is replaced, record all ID of the tire pressure warning valve/transmitter using SSM4 in advance.

- If the tire pressure warning ECM/valve/transmitter is replaced, be sure to register the transmitter ID to the tire pressure warning ECM. (Refer to TM - 10)
- If the tire pressure warning ECM/receiver is replaced, register the recognition code after work (refer to TM - 10) and register the transmitter ID.

1	Identify transmitter corresponding to DTC.

(1) Adjust tire pressures to the specified pressure.
(2) Turn the ignition switch to OFF.
(3) Connect the SSM4 to the DLC3.
(4) Turn the ignition switch to ON.
(5) Turn on the SSM4.
(6) Enter the following menu. [Each System] / [Tire Pressure Monitor] / [Data monitor]
(7) Check the value by referring to the following table.

Tire pressure monitoring

Tester display	Measured item/Range	Normal condition	Notes for diagnosis
[ID1 tire pressure]	ID1 tire pressure/ Minimum: absolute pressure / 50 kPa {0.5 kgf/cm^2, 7 psi}, relative pressure / -50 kPa {-0.5 kgf/cm^2, -7 psi} Maximum: absolute pressure / 480 kPa {4.9 kgf/cm^2, 70 psi}, relative pressure / 380 kPa {3.9 kgf/cm^2, 55 psi}	Actual tire pressure	If 50 kPa {0.5 kgf/cm^2, 7 psi} is shown as the absolute pressure, or -50 kPa {-0.5 kgf/cm^2, -7 psi} is shown as a relative pressure, data is not received. *
[ID2 tire pressure]	ID2 tire pressure/ Minimum: absolute pressure / 50 kPa {0.5 kgf/cm^2, 7 psi}, relative pressure / -50 kPa {-0.5 kgf/cm^2, -7 psi} Maximum: absolute pressure / 480 kPa {4.9 kgf/cm^2, 70 psi}, relative pressure / 380 kPa {3.9 kgf/cm^2, 55 psi}	Actual tire pressure	If 50 kPa {0.5 kgf/cm^2, 7 psi} is shown as the absolute pressure, or -50 kPa {-0.5 kgf/cm^2, -7 psi} is shown as a relative pressure, data is not received. *
[ID3 tire pressure]	ID3 tire pressure/ Minimum: absolute pressure / 50 kPa {0.5 kgf/cm^2, 7 psi}, relative pressure / -50 kPa {-0.5 kgf/cm^2, -7 psi} Maximum: absolute pressure / 480 kPa {4.9 kgf/cm^2, 70 psi}, relative pressure / 380 kPa {3.9 kgf/cm^2, 55 psi}	Actual tire pressure	If 50 kPa {0.5 kgf/cm^2, 7 psi} is shown as the absolute pressure, or -50 kPa {-0.5 kgf/cm^2, -7 psi} is shown as a relative pressure, data is not received. *
[ID4 tire pressure]	ID4 tire pressure/ Minimum: absolute pressure / 50 kPa {0.5 kgf/cm^2, 7 psi}, relative pressure / -50 kPa {-0.5 kgf/cm^2, -7 psi} Maximum: absolute pressure / 480 kPa {4.9 kgf/cm^2, 70 psi}, relative pressure / 380 kPa {3.9 kgf/cm^2, 55 psi}	Actual tire pressure	If 50 kPa {0.5 kgf/cm^2, 7 psi} is shown as the absolute pressure, or -50 kPa {-0.5 kgf/cm^2, -7 psi} is shown as a relative pressure, data is not received. *

*: It takes several minutes until the data is displayed.

(8) Deflate air pressure in each tire at least 40 kPa {0.4 kgf/cm^2, 5.8 psi} within 30 seconds.
(9) Confirm data list.

TM

CAUTION:
- It may take approximately 2 to 3 minutes for updating the tire pressure data.
- If the "Transmitter tire pressure" data does not change, rotate the tire by 90° to 270° and re-confirm. Then decrease the tire pressure rapidly and re-confirm data.
- Record the transmitter ID of "ID tire pressure" data corresponding to each tire.

(10) Once the "ID tire pressure" data of the tire (from ID1 to ID4) is updated, repeat these steps one by one. Identify transmitter corresponding to DTC.

Result

Result	Proceed to
One or more transmitters are abnormal.	A
All normal	B

B → Complete

A

2	Confirm transmitter ID.

(1) Turn the ignition switch to OFF.
(2) Connect the SSM4 to the DLC3.
(3) Turn the ignition switch to ON.
(4) Turn on the SSM4.
(5) Enter the following menu. [Each System] / [Tire Pressure Monitor] / [Data monitor]
(6) Check the value by referring to the following table.

Tire pressure monitoring

Tester display	Measured item/Range	Normal condition	Notes for diagnosis
[ID1 registration code]	Registered ID1 code/ Minimum: 0, Maximum: FFFFFFF*	Displays the registered ID No. of transmitter ID1	-
[ID2 registration code]	Registered ID2 code/ Minimum: 0, Maximum: FFFFFFF*	Displays the registered ID No. of transmitter ID2	-
[ID3 registration code]	Registered ID3 code/ Minimum: 0, Maximum: FFFFFFF*	Displays the registered ID No. of transmitter ID3	-
[ID4 registration code]	Registered ID4 code/ Minimum: 0, Maximum: FFFFFFF*	Displays the registered ID No. of transmitter ID4	-

*: Displayed only when ID No. is not registered.

(7) Confirm that the entered ID matches with the displayed ID.

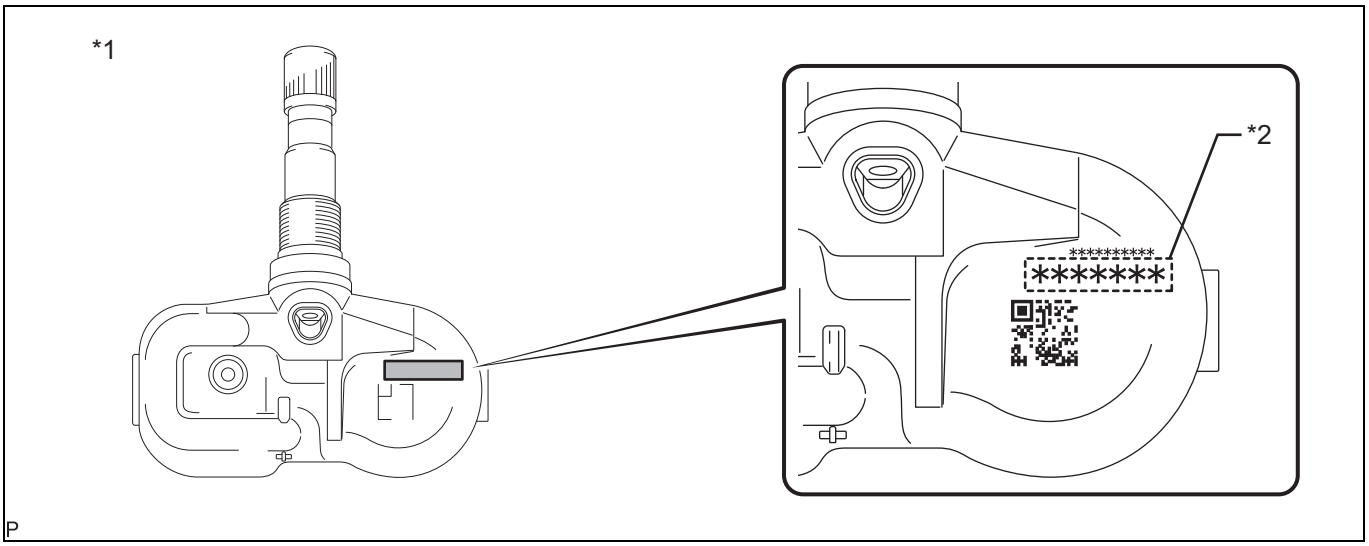

Captions in illustration

*1	Tire pressure warning valve/transmitter	*2	Transmitter ID (7 digits number)

(8) Confirm that the transmitter ID number matches with recorded transmitter ID.

Result

Result	Proceed to
ID matches.	A
ID does not match.	B

B → Go to Step 4.

A

3	Replace tire pressure warning valve/transmitter.

(1) Replace the tire pressure warning valve/transmitter.

Next

4	Register the transmitter ID.

(1) Register the ID. (Refer to TM - 10)

Next

5	Confirm tire pressure (data list).

(1) Turn the ignition switch to OFF.
(2) Connect the SSM4 to the DLC3.
(3) Turn the ignition switch to ON.
(4) Turn on the SSM4.
(5) Enter the following menu. [Each System] / [Tire Pressure Monitor] / [Data monitor]
(6) Check the value by referring to the following table.

TM

Tire pressure monitoring

Tester display	Measured item/Range	Normal condition	Notes for diagnosis
[ID1 tire pressure]	ID1 tire pressure/ Minimum: absolute pressure / 50 kPa {0.5 kgf/cm^2, 7 psi}, relative pressure / -50 kPa {-0.5 kgf/cm^2, -7 psi} Maximum: absolute pressure / 480 kPa {4.9 kgf/cm^2, 70 psi}, relative pressure / 380 kPa {3.9 kgf/cm^2, 55 psi}	Actual tire pressure	If 50 kPa {0.5 kgf/cm^2, 7 psi} is shown as the absolute pressure, or -50 kPa {-0.5 kgf/cm^2, -7 psi} is shown as a relative pressure, data is not received. *
[ID2 tire pressure]	ID2 tire pressure/ Minimum: absolute pressure / 50 kPa {0.5 kgf/cm^2, 7 psi}, relative pressure / -50 kPa {-0.5 kgf/cm^2, -7 psi} Maximum: absolute pressure / 480 kPa {4.9 kgf/cm^2, 70 psi}, relative pressure / 380 kPa {3.9 kgf/cm^2, 55 psi}	Actual tire pressure	If 50 kPa {0.5 kgf/cm^2, 7 psi} is shown as the absolute pressure, or -50 kPa {-0.5 kgf/cm^2, -7 psi} is shown as a relative pressure, data is not received. *
[ID3 tire pressure]	ID3 tire pressure/ Minimum: absolute pressure / 50 kPa {0.5 kgf/cm^2, 7 psi}, relative pressure / -50 kPa {-0.5 kgf/cm^2, -7 psi} Maximum: absolute pressure / 480 kPa {4.9 kgf/cm^2, 70 psi}, relative pressure / 380 kPa {3.9 kgf/cm^2, 55 psi}	Actual tire pressure	If 50 kPa {0.5 kgf/cm^2, 7 psi} is shown as the absolute pressure, or -50 kPa {-0.5 kgf/cm^2, -7 psi} is shown as a relative pressure, data is not received. *
[ID4 tire pressure]	ID4 tire pressure/ Minimum: absolute pressure / 50 kPa {0.5 kgf/cm^2, 7 psi}, relative pressure / -50 kPa {-0.5 kgf/cm^2, -7 psi} Maximum: absolute pressure / 480 kPa {4.9 kgf/cm^2, 70 psi}, relative pressure / 380 kPa {3.9 kgf/cm^2, 55 psi}	Actual tire pressure	If 50 kPa {0.5 kgf/cm^2, 7 psi} is shown as the absolute pressure, or -50 kPa {-0.5 kgf/cm^2, -7 psi} is shown as a relative pressure, data is not received. *

*: It takes several minutes until the data is displayed.

NOTE:

If the "Transmitter tire pressure" data does not change, rotate the tire by 90° to 270° and re-confirm. Then decrease the tire pressure rapidly and re-confirm data.

TM

Result

Result	Proceed to
The tire pressure data is not displayed.	A
The tire pressures data matches with the specified value.	B

B → Complete

A

Replace tire pressure warning ECM/receiver.

DTC	C2141	Transmitter ID1 Error

DTC	C2142	Transmitter ID2 Error

DTC	C2143	Transmitter ID3 Error

DTC	C2144	Transmitter ID4 Error

Circuit description

The tire pressure warning valve/transmitter installed on the tire & wheel measures the tire pressure. The measured value is sent to the tire pressure warning ECM/receiver as the form of radio wave. Tire pressure warning ECM/receiver compares the measured air pressure with the threshold of air pressure. If the measured value of the air pressure is less than threshold, the tire pressure warning light in the combination meter illuminates. These diagnostic codes are output, when the malfunction occurred in the inner circuit of the tire pressure warning valve/transmitter.

DTC No.	DTC detecting condition	Faulty part
C2141 C2142 C2143 C2144	When the malfunction of inner circuit is received consecutively 3 times, the tire pressure warning valve/transmitter is judged as faulty and diagnostic codes are output. This type of malfunction occurs when the pressure falls out of -50 to 380 kPa {-0.5 to 3.9 kgf/cm^2, -7 to 55 psi} range and the tire internal temperature falls out of -40 to 120°C {-40 to 248°F} range. Or the error occurs at the tire pressure warning valve/transmitter, and near it.	• Tire pressure warning valve/transmitter • Tire pressure warning ECM/receiver

NOTE:

Faulty tire pressure warning valve/transmitter can not be identified by output of diagnostic codes. Perform this procedure to identify the faulty part.

Inspection steps

CAUTION:

- If the tire pressure warning ECM is replaced, record all ID of the tire pressure warning valve/transmitter using SSM4 in advance.
- If the tire pressure warning ECM/valve/transmitter is replaced, be sure to register the transmitter ID to the tire pressure warning ECM. (Refer to TM - 10)
- If the tire pressure warning ECM/receiver is replaced, register the recognition code after work (refer to TM - 10) and register the transmitter ID.

TM

1	Identify transmitter corresponding to DTC.

(1) Adjust tire pressures to the specified pressure.
(2) Turn the ignition switch to OFF.
(3) Connect the SSM4 to the DLC3.
(4) Turn the ignition switch to ON.
(5) Turn on the SSM4.
(6) Enter the following menu. [Each System] / [Tire Pressure Monitor] / [Data monitor]
(7) Display the "ID tire pressure" data of each wheel using the SSM4.
(8) Within 30 seconds, decrease the air pressure from each tire by 40 kPa {0.4 kg/cm2, 5.8 psi} or more. If the "ID tire pressure" displayed in SSM4 (from ID1 to ID4) is not updated, the cause of the trouble of the tire pressure warning valve/transmitter corresponding to non-updated "ID tire pressure" data is found in output diagnostic codes.

NOTE:
- Decrease the tire pressure of each tire repeatedly to identify the tire pressure warning valve/transmitter that is faulty.
- Record the "ID tire pressure" data (from ID1 to ID4) corresponding to each tire.

Tire pressure monitoring

Tester display	Measured item/Range	Normal condition	Notes for diagnosis
[ID1 tire pressure]	ID1 tire pressure/ Minimum: absolute pressure / 50 kPa {0.5 kgf/cm^2, 7 psi}, relative pressure / -50 kPa {-0.5 kgf/cm^2, -7 psi} Maximum: absolute pressure / 480 kPa {4.9 kgf/cm^2, 70 psi}, relative pressure / 380 kPa {3.9 kgf/cm^2, 55 psi}	Actual tire pressure	If 50 kPa {0.5 kgf/cm^2, 7 psi} is shown as the absolute pressure, or -50 kPa {-0.5 kgf/cm^2, -7 psi} is shown as a relative pressure, data is not received. *
[ID2 tire pressure]	ID2 tire pressure/ Minimum: absolute pressure / 50 kPa {0.5 kgf/cm^2, 7 psi}, relative pressure / -50 kPa {-0.5 kgf/cm^2, -7 psi} Maximum: absolute pressure / 480 kPa {4.9 kgf/cm^2, 70 psi}, relative pressure / 380 kPa {3.9 kgf/cm^2, 55 psi}	Actual tire pressure	If 50 kPa {0.5 kgf/cm^2, 7 psi} is shown as the absolute pressure, or -50 kPa {-0.5 kgf/cm^2, -7 psi} is shown as a relative pressure, data is not received. *
[ID3 tire pressure]	ID3 tire pressure/ Minimum: absolute pressure / 50 kPa {0.5 kgf/cm^2, 7 psi}, relative pressure / -50 kPa {-0.5 kgf/cm^2, -7 psi} Maximum: absolute pressure / 480 kPa {4.9 kgf/cm^2, 70 psi}, relative pressure / 380 kPa {3.9 kgf/cm^2, 55 psi}	Actual tire pressure	If 50 kPa {0.5 kgf/cm^2, 7 psi} is shown as the absolute pressure, or -50 kPa {-0.5 kgf/cm^2, -7 psi} is shown as a relative pressure, data is not received. *
[ID4 tire pressure]	ID4 tire pressure/ Minimum: absolute pressure / 50 kPa {0.5 kgf/cm^2, 7 psi}, relative pressure / -50 kPa {-0.5 kgf/cm^2, -7 psi} Maximum: absolute pressure / 480 kPa {4.9 kgf/cm^2, 70 psi}, relative pressure / 380 kPa {3.9 kgf/cm^2, 55 psi}	Actual tire pressure	If 50 kPa {0.5 kgf/cm^2, 7 psi} is shown as the absolute pressure, or -50 kPa {-0.5 kgf/cm^2, -7 psi} is shown as a relative pressure, data is not received. *

*: It takes several minutes until the data is displayed. If the data is not displayed, perform troubleshooting according to the procedures from diagnostic code C2121 to C2124. (Refer to TM - 23)

(9) Confirm data list.

Result

Result	Malfunction type
One of the "ID tire pressure" data (from ID1 to ID4) is updated.	Normal
"ID tire pressure" data is not changed.	Transmitter corresponding to diagnostic codes

CAUTION:
- It may take approximately 2 to 3 minutes for updating the tire pressure data.
- If the "Transmitter tire pressure" data does not change, rotate the tire by 90° to 270° and re-confirm. Then decrease the tire pressure rapidly and re-confirm data.
- Record the position of the transmitter ID and the transmitter at normal condition.

(10) If the "Transmitter tire pressure" data is changed, perform the above procedure repeatedly for each wheel, and identify the tire pressure warning valve/transmitter corresponding to the diagnostic code.

(11) If the "Transmitter tire pressure" data (from ID1 to ID4) of 4 wheels are changed, identify the faulty wheel by output diagnostic codes and recorded transmitter ID.

Next

2	Replace tire pressure warning valve/transmitter.

(1) Replace the identified tire pressure warning valve/transmitter with new one.

NOTE:
- Be sure to record the transmitter ID before installing the new tire pressure warning valve/transmitter.
- Use SSM4 to check and record the ID of the tire pressure warning valve/transmitter not to be replaced.

Next

3	Register the transmitter ID.

(1) Register all wheel transmitter ID. (Refer to TM - 10)

Next

4	Confirm tire pressure (data list).

(1) Turn the ignition switch to OFF.
(2) Connect the SSM4 to the DLC3.
(3) Turn the ignition switch to ON.
(4) Turn on the SSM4.
(5) Enter the following menu. [Each System] / [Tire Pressure Monitor] / [Data monitor]
(6) Check the value by referring to the following table.

TM

Tire pressure monitoring

Tester display	Measured item/Range	Normal condition	Notes for diagnosis
[ID1 tire pressure]	ID1 tire pressure/ Minimum: absolute pressure / 50 kPa {0.5 kgf/cm^2, 7 psi}, relative pressure / -50 kPa {-0.5 kgf/cm^2, -7 psi} Maximum: absolute pressure / 480 kPa {4.9 kgf/cm^2, 70 psi}, relative pressure / 380 kPa {3.9 kgf/cm^2, 55 psi}	Actual tire pressure	If 50 kPa {0.5 kgf/cm^2, 7 psi} is shown as the absolute pressure, or -50 kPa {-0.5 kgf/cm^2, -7 psi} is shown as a relative pressure, data is not received. *

Tester display	Measured item/Range	Normal condition	Notes for diagnosis
[ID2 tire pressure]	ID2 tire pressure/ Minimum: absolute pressure / 50 kPa {0.5 kgf/cm^2, 7 psi}, relative pressure / -50 kPa {-0.5 kgf/cm^2, -7 psi} Maximum: absolute pressure / 480 kPa {4.9 kgf/cm^2, 70 psi}, relative pressure / 380 kPa {3.9 kgf/cm^2, 55 psi}	Actual tire pressure	If 50 kPa {0.5 kgf/cm^2, 7 psi} is shown as the absolute pressure, or -50 kPa {-0.5 kgf/cm^2, -7 psi} is shown as a relative pressure, data is not received. *
[ID3 tire pressure]	ID3 tire pressure/ Minimum: absolute pressure / 50 kPa {0.5 kgf/cm^2, 7 psi}, relative pressure / -50 kPa {-0.5 kgf/cm^2, -7 psi} Maximum: absolute pressure / 480 kPa {4.9 kgf/cm^2, 70 psi}, relative pressure / 380 kPa {3.9 kgf/cm^2, 55 psi}	Actual tire pressure	If 50 kPa {0.5 kgf/cm^2, 7 psi} is shown as the absolute pressure, or -50 kPa {-0.5 kgf/cm^2, -7 psi} is shown as a relative pressure, data is not received. *
[ID4 tire pressure]	ID4 tire pressure/ Minimum: absolute pressure / 50 kPa {0.5 kgf/cm^2, 7 psi}, relative pressure / -50 kPa {-0.5 kgf/cm^2, -7 psi} Maximum: absolute pressure / 480 kPa {4.9 kgf/cm^2, 70 psi}, relative pressure / 380 kPa {3.9 kgf/cm^2, 55 psi}	Actual tire pressure	If 50 kPa {0.5 kgf/cm^2, 7 psi} is shown as the absolute pressure, or -50 kPa {-0.5 kgf/cm^2, -7 psi} is shown as a relative pressure, data is not received. *

*: It takes several minutes until the data is displayed.

NOTE:

If the "Transmitter tire pressure" data does not change, rotate the tire by 90° to 270° and re-confirm. Then decrease the tire pressure rapidly and re-confirm data.

Result

Result	Proceed to
The tire pressure data is not displayed.	A
The tire pressures data matches with the specified value.	B

B → Complete

A → Replace tire pressure warning ECM/receiver.

TM

DTC	C2171	Transmitter ID not Registered

Circuit description

The ID of the tire pressure warning valve/transmitter installed on each wheel is registered in the tire pressure warning ECM/receiver.

If the ECM detects the ID code that is not registered, diagnostic code is recorded.

DTC No.	DTC detecting condition	Faulty part
C2171	When the transmitter ID code is not registered (while the ID code is not registered, 3 minutes or more have passed)	Tire pressure warning ECM/receiver

Inspection steps

CAUTION:

- If the tire pressure warning ECM is replaced, record all ID of the tire pressure warning valve/transmitter using SSM4 in advance.
- If the tire pressure warning ECM/valve/transmitter is replaced, be sure to register the transmitter ID to the tire pressure warning ECM. (Refer to TM - 10)
- If the tire pressure warning ECM/receiver is replaced, register the recognition code after work (refer to TM - 10) and register the transmitter ID.

1	Confirm condition for registration (registered ID code).

(1) Turn the ignition switch to OFF.
(2) Connect the SSM4 to the DLC3.
(3) Turn the ignition switch to ON.
(4) Turn on the SSM4.
(5) Enter the following menu. [Each System] / [Tire Pressure Monitor] / [Data monitor]
(6) Check the value by referring to the following table.

Tire pressure monitoring

Tester display	Measured item/Range	Normal condition	Notes for diagnosis
[ID1 registration code]	Registered ID1 code/ Minimum: 0, Maximum: FFFFFFF*	Displays the registered ID No. of transmitter ID1	-
[ID2 registration code]	Registered ID2 code/ Minimum: 0, Maximum: FFFFFFF*	Displays the registered ID No. of transmitter ID2	-
[ID3 registration code]	Registered ID3 code/ Minimum: 0, Maximum: FFFFFFF*	Displays the registered ID No. of transmitter ID3	-
[ID4 registration code]	Registered ID4 code/ Minimum: 0, Maximum: FFFFFFF*	Displays the registered ID No. of transmitter ID4	-

*: Displayed only when ID No. is not registered.
Criteria: The transmitter ID code that has been registered in SSM4 is displayed.

NG → Go to Step 2.

OK

Replace tire pressure warning ECM/receiver.

2	Register the transmitter ID.

(1) Register all wheel transmitter ID. (Refer to TM - 10)

Next

3	Confirm tire pressure (data list).

(1) Turn the ignition switch to OFF.
(2) Connect the SSM4 to the DLC3.

(3) Turn the ignition switch to ON.
(4) Turn on the SSM4.
(5) Enter the following menu. [Each System] / [Tire Pressure Monitor] / [Data monitor]
(6) Check the value by referring to the following table.

Tire pressure monitoring

Tester display	Measured item/Range	Normal condition	Notes for diagnosis
[ID1 tire pressure]	ID1 tire pressure/ Minimum: absolute pressure / 50 kPa {0.5 kgf/cm^2, 7 psi}, relative pressure / -50 kPa {-0.5 kgf/cm^2, -7 psi} Maximum: absolute pressure / 480 kPa {4.9 kgf/cm^2, 70 psi}, relative pressure / 380 kPa {3.9 kgf/cm^2, 55 psi}	Actual tire pressure	If 50 kPa {0.5 kgf/cm^2, 7 psi} is shown as the absolute pressure, or -50 kPa {-0.5 kgf/cm^2, -7 psi} is shown as a relative pressure, data is not received. *
[ID2 tire pressure]	ID2 tire pressure/ Minimum: absolute pressure / 50 kPa {0.5 kgf/cm^2, 7 psi}, relative pressure / -50 kPa {-0.5 kgf/cm^2, -7 psi} Maximum: absolute pressure / 480 kPa {4.9 kgf/cm^2, 70 psi}, relative pressure / 380 kPa {3.9 kgf/cm^2, 55 psi}	Actual tire pressure	If 50 kPa {0.5 kgf/cm^2, 7 psi} is shown as the absolute pressure, or -50 kPa {-0.5 kgf/cm^2, -7 psi} is shown as a relative pressure, data is not received. *
[ID3 tire pressure]	ID3 tire pressure/ Minimum: absolute pressure / 50 kPa {0.5 kgf/cm^2, 7 psi}, relative pressure / -50 kPa {-0.5 kgf/cm^2, -7 psi} Maximum: absolute pressure / 480 kPa {4.9 kgf/cm^2, 70 psi}, relative pressure / 380 kPa {3.9 kgf/cm^2, 55 psi}	Actual tire pressure	If 50 kPa {0.5 kgf/cm^2, 7 psi} is shown as the absolute pressure, or -50 kPa {-0.5 kgf/cm^2, -7 psi} is shown as a relative pressure, data is not received. *
[ID4 tire pressure]	ID4 tire pressure/ Minimum: absolute pressure / 50 kPa {0.5 kgf/cm^2, 7 psi}, relative pressure / -50 kPa {-0.5 kgf/cm^2, -7 psi} Maximum: absolute pressure / 480 kPa {4.9 kgf/cm^2, 70 psi}, relative pressure / 380 kPa {3.9 kgf/cm^2, 55 psi}	Actual tire pressure	If 50 kPa {0.5 kgf/cm^2, 7 psi} is shown as the absolute pressure, or -50 kPa {-0.5 kgf/cm^2, -7 psi} is shown as a relative pressure, data is not received. *

*: It takes several minutes until the data is displayed.

NOTE:
If the "Transmitter tire pressure" data does not change, rotate the tire by 90° to 270° and re-confirm. Then decrease the tire pressure rapidly and re-confirm data.

Result

Result	Proceed to
The tire pressures data matches with the specified value.	A
The tire pressure data is not displayed.	B

B → Replace tire pressure warning ECM/receiver.

TM

A

Complete

DTC	C2176	Receiver Error

Circuit description

The signal is sent to the tire pressure warning ECM/receiver as the form of radio wave.

DTC No.	DTC detecting condition	Faulty part
C2176	Malfunction in inner circuit of tire pressure warning ECM/receiver	Tire pressure warning ECM/receiver

Inspection steps

CAUTION:

- If the tire pressure warning ECM is replaced, record all ID of the tire pressure warning valve/transmitter using SSM4 in advance.
- If the tire pressure warning ECM/valve/transmitter is replaced, be sure to register the transmitter ID to the tire pressure warning ECM. (Refer to TM - 10)
- If the tire pressure warning ECM/receiver is replaced, register the recognition code after work (refer to TM - 10) and register the transmitter ID.

1	Check diagnostic code output (C2176).

(1) Clear diagnostic codes. (Refer to TM - 13)
(2) Turn the ignition switch to OFF.
(3) Turn IG to ON and check diagnostic codes. (Refer to TM - 13)
Criteria: DTC C2176 is not output.

NG → Replace tire pressure warning ECM/receiver.

OK

Complete

DTC	C2179	Lost Communication (BERKES Communication)

TM

Circuit description

Main body ECM (multiplex network body computer) and tire pressure warning ECM/receiver communicates via direct wiring.

DTC No.	DTC detecting condition	Faulty part
C2179	When the communication data between the tire pressure warning ECM/receiver and the main body ECM (multiplex network body computer) breaks for 10 seconds or more	• Main body ECM (multiplex network body ECM) • Wiring harness or connector • Tire pressure warning ECM/receiver

Circuit figure

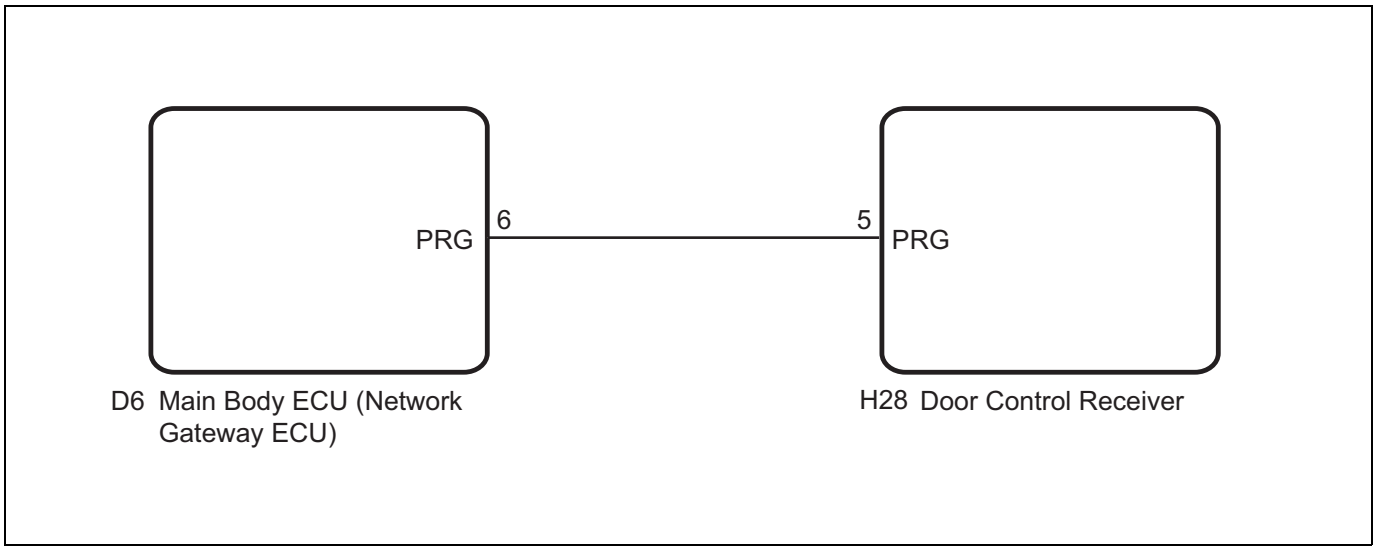

Inspection steps

CAUTION:

- If the tire pressure warning ECM/receiver is replaced, record all ID of the tire pressure warning valve/transmitter using SSM4 in advance.
- If the tire pressure warning ECM is replaced, be sure to register the transmitter ID to the tire pressure warning ECM. (Refer to TM - 10)
- If the tire pressure warning ECM/receiver is replaced, register the recognition code after work (refer to TM - 10) and register the transmitter ID.

1	Check wire harness and connector (tire pressure warning ECM/receiver - main body ECM (multiplex network body ECM)).

(1) Disconnect the tire pressure warning ECM/receiver H28 connector and the main body ECM (multiplex network body ECM) D6 connector.
(2) Measure the resistance according to the following table.

Normal resistance

Tester connection	Condition	Specific condition
H28-5 (PRG) - D6-6	Always	1 Ωor less
H28-5 (PRG) - chassis ground	Always	10 k Ωor more

NG → Repair or replacement of wiring harness or connector

OK

2	Replace tire pressure warning ECM/receiver.

(1) Replace the tire pressure warning ECM/receiver.

Next

3	Check diagnostic codes output.

(1) Clear diagnostic codes. (Refer to TM - 13)
(2) Turn the ignition switch to OFF.
(3) Turn the ignition switch to ON.

(4) Check diagnostic codes. (Refer to TM - 13)
Criteria: DTC C2179 is not output.

NG → Replace the main body ECM (multiplex network body ECM).

OK

Complete

Tire pressure warning light circuit

Circuit description

If the tire pressure warning ECM/receiver detects a malfunction, the tire pressure warning light illuminates after 1 minute blinking. At the same time, the tire pressure warning system stops. At this time, the tire pressure warning ECM/receiver records diagnostic codes. By connecting the TC terminal and CG terminal of DLC3, the tire pressure warning light blinks and diagnostic codes are output.

The tire pressure warning ECM/receiver sends the tire pressure warning light ON signal to the main body ECM (multiplex network body computer)via direct wiring. Main body ECM (multiplex network body computer) sends the signal to the combination meter ASSY via CAN communication line.

Circuit figure

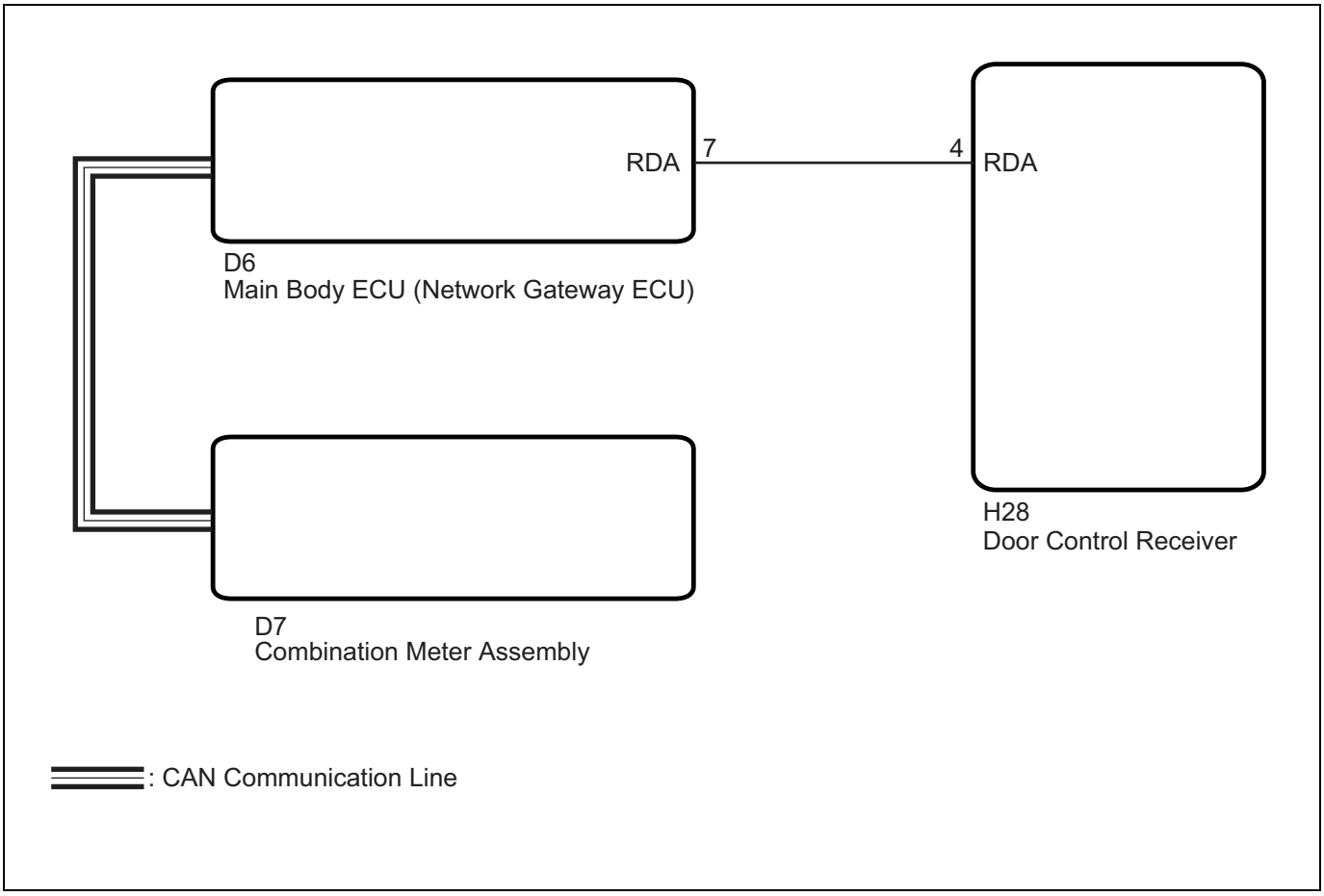

Inspection steps

CAUTION:

- If the tire pressure warning ECM is replaced, record all ID of the tire pressure warning valve/transmitter using SSM4 in advance.

- If the tire pressure warning ECM/valve/transmitter is replaced, be sure to register the transmitter ID to the tire pressure warning ECM. (Refer to TM - 10)
- If the tire pressure warning ECM/receiver is replaced, register the recognition code after work (refer to TM - 10) and register the transmitter ID.

1	Checking diagnostic codes (CAN communication system).

(1) Check DTC display in the CAN communication system. (Refer to NW - 30)

Result

Result	Proceed to
Diagnostic codes are not output.	A
Diagnostic codes are output.	B

B → Go to CAN communication system.

A

2	Check diagnostic code output (B1247).

(1) Clear diagnostic codes. (Refer to TM - 13)
(2) Turn the ignition switch to OFF.
(3) Turn the ignition switch to ON.
(4) Check diagnostic codes. (Refer to TM - 13)
Criteria: DTC B1247 is not output.

NG → Go to diagnostic code B1247 (refer to TM - 17)

OK

3	Check tire pressure warning light operation (active test).

(1) Turn the ignition switch to OFF.
(2) Connect the SSM4 to the DLC3.
(3) Turn the ignition switch to ON.
(4) Turn on the SSM4.
(5) Enter the following menu. [Each System] / [Combination Meter] / [Active Test] / [Lamp check]
(6) Using the SSM4, check the tire pressure warning light condition.

TM

Combination meter

Tester display	Measured item/Range	Normal condition	Notes for diagnosis
[TPMS warning]	Tire pressure warning light	Tire pressure warning light OFF or ON	Confirm the vehicle is parked, and engine is idling.

Criteria: The tire pressure warning light changes between ON and OFF according to the SSM4 operation.

B → Go to meter & gauge system.

A

Replace tire pressure warning ECM/receiver.

ECM power supply circuit

Circuit description

This is the power supply for the tire pressure warning ECM/receiver.

Circuit figure

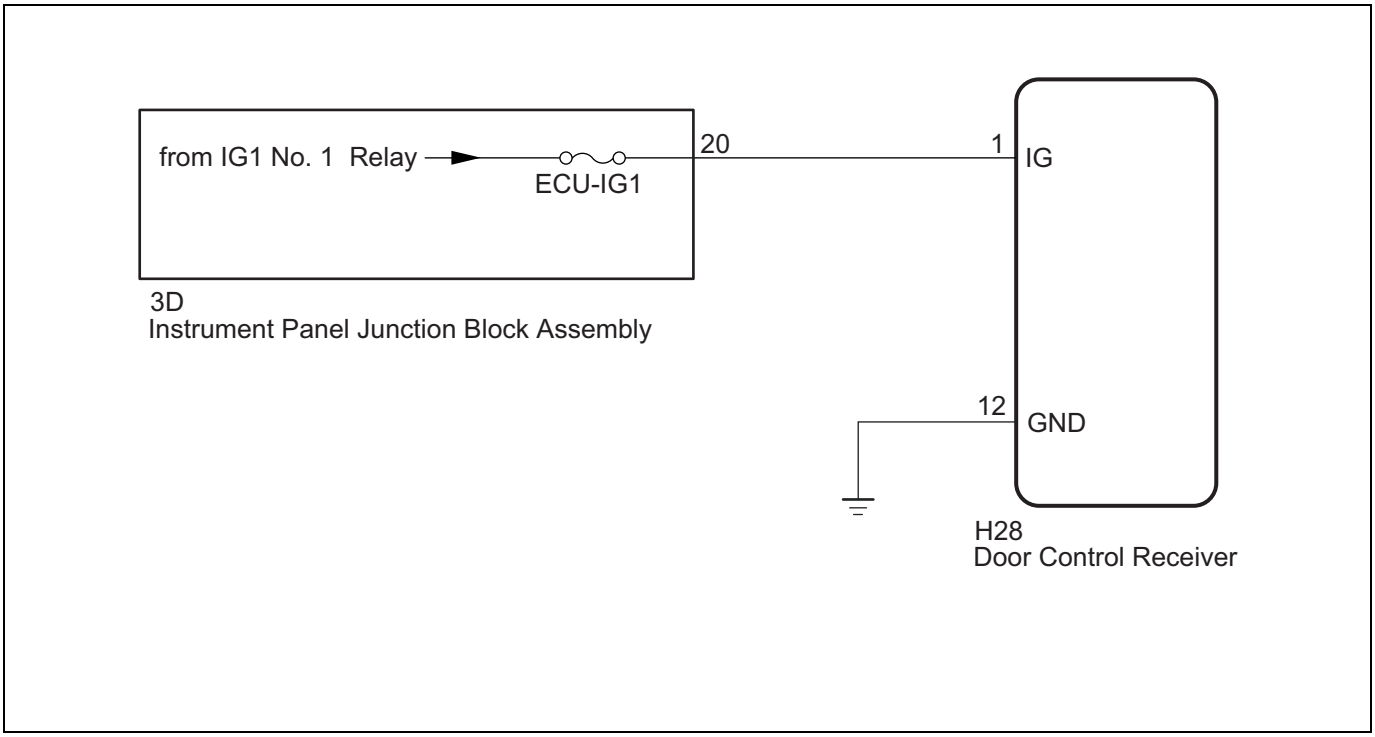

Inspection steps

CAUTION:

- If the tire pressure warning ECM/receiver is replaced, record all ID of the tire pressure warning valve/transmitter using SSM4 in advance.
- If the tire pressure warning ECM is replaced, be sure to register the transmitter ID to the tire pressure warning ECM. (Refer to TM - 10)
- If the tire pressure warning ECM/receiver is replaced, register the recognition code after work (refer to TM - 10) and register the transmitter ID.

NOTE:

Before performing the following inspection steps, check the fuses related to this system.

1	Check harness and connector (ECM - battery - chassis ground).

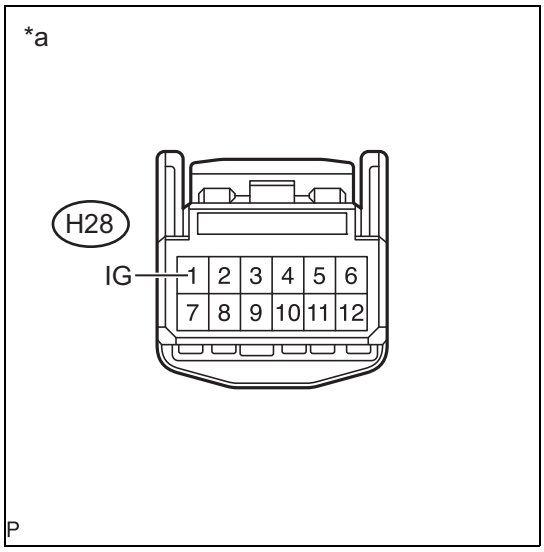

(1) Disconnect the H28 ECM connector.
(2) Measure the voltage according to the following table.
Standard voltage

Tester connection	Condition	Specific condition
H28-1 (IG) - chassis ground	IG SW ON	11 to 14 V
	IG SW OFF	1V or less

(3) Measure the resistance according to the following table.
Normal resistance

Tester connection	Condition	Specific condition
H28-12 (GND) - chassis ground	Always	1 Ωor less

Captions in illustration

*a	Vehicle wire harness connector front side (tire pressure warning ECM/receiver)

NG → Repair or replacement of wiring harness or connector

OK

Replace tire pressure warning ECM/receiver.

TM

TIRE PRESSURE WARNING RECEIVER

COMPONENTS

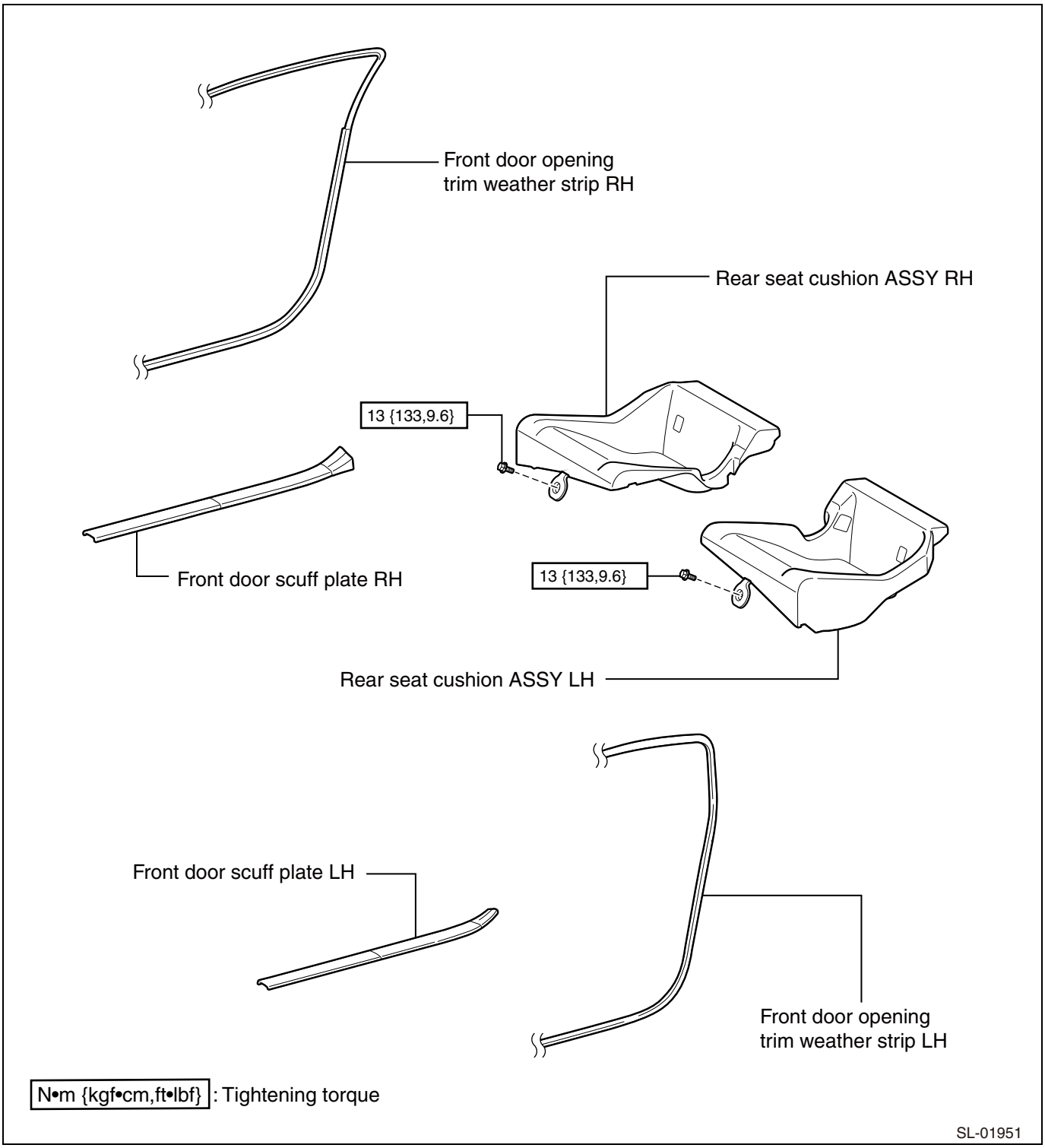

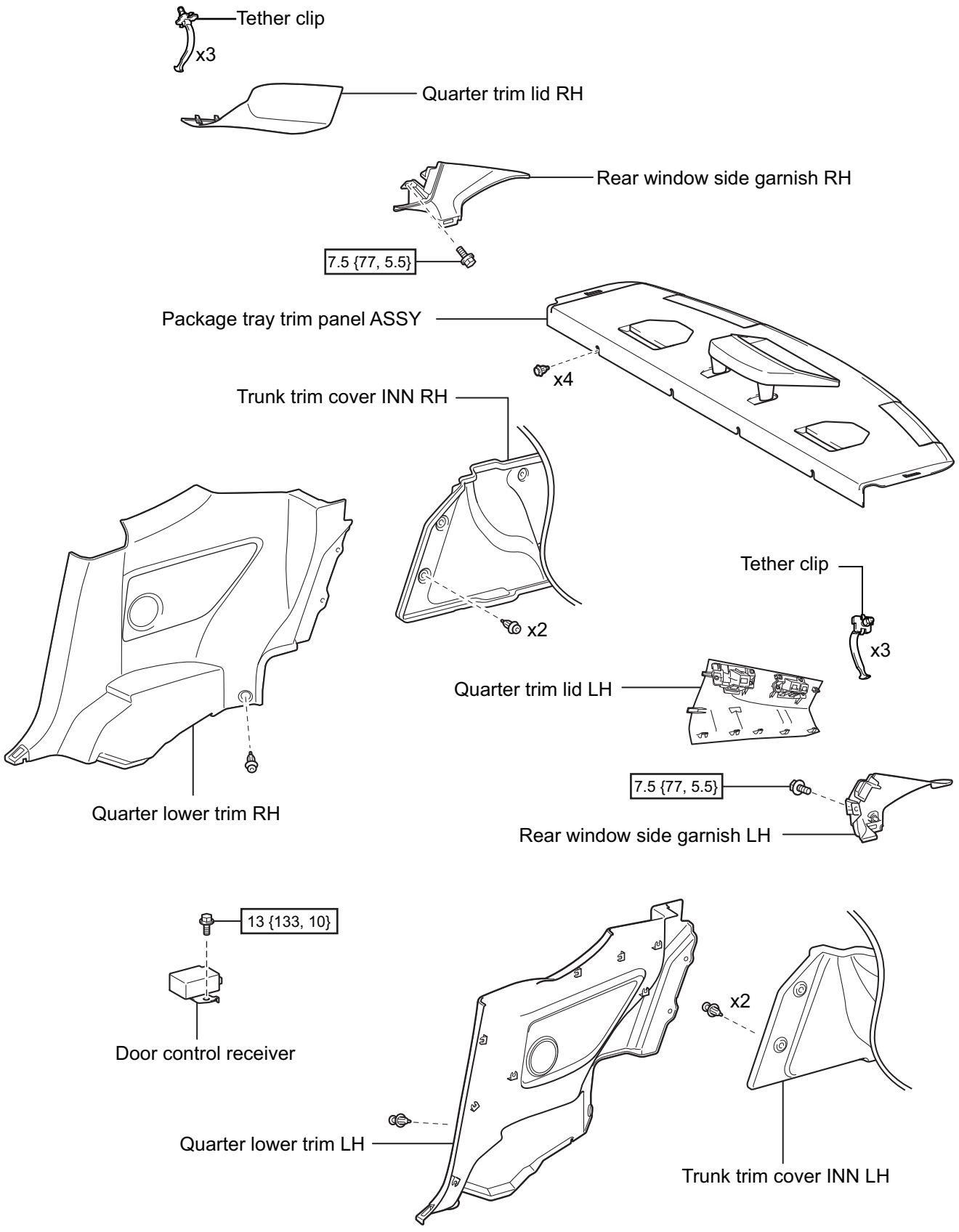

N*m {kgf*cm, ft*lbf}: Tightening torque

EI-10379

TM

REMOVAL

NOTE:

The tire pressure warning receiver is integrated in the door control receiver.

1. REMOVE SEPARATE TYPE REAR SEAT CUSHION ASSEMBLY LH (See page SE - 31)
2. REMOVE SEPARATE TYPE REAR SEAT CUSHION ASSEMBLY RH
   NOTE:
   Use the same procedure described for the LH side.
3. REMOVE FRONT DOOR SCUFF PLATE LH (See page IT - 48)
4. REMOVE FRONT DOOR SCUFF PLATE RH
   NOTE:
   Use the same procedure described for the LH side.
5. REMOVE FRONT DOOR OPENING TRIM WEATHERSTRIP LH (See page IT - 48)
6. REMOVE FRONT DOOR OPENING TRIM WEATHERSTRIP RH
   NOTE:
   Use the same procedure described for the LH side.
7. SEPARATE TRUNK TRIM COVER INN LH (See page IT - 49)
8. SEPARATE TRUNK TRIM COVER INN RH
   NOTE:
   Use the same procedure described for the LH side.
9. REMOVE QUARTER LOWER TRIM LH (See page IT - 49)
10. REMOVE QUARTER LOWER TRIM RH
    NOTE:
    Use the same procedure described for the LH side.
11. REMOVE QUARTER TRIM LID SUB-ASSEMBLY LH (See page IT - 49)
12. REMOVE QUARTER TRIM LID SUB-ASSEMBLY RH
    NOTE:
    Use the same procedure described for the LH side.
13. REMOVE REAR WINDOW SIDE GARNISH LH (See page IT - 50)
14. REMOVE REAR WINDOW SIDE GARNISH RH
    NOTE:
    Use the same procedure described for the LH side.
15. REMOVE PACKAGE TRAY TRIM PANEL ASSEMBLY (See page DL - 111)

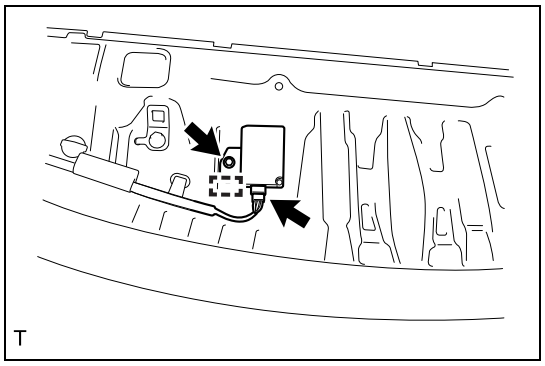

16. REMOVE DOOR CONTROL RECEIVER
    (1) Disconnect the connector.
    (2) Remove the bolt.
    (3) Disengage the guide and remove the door control receiver.
    CAUTION:
    - Do not drop the door control receiver or apply impact on it.
    - When replacing or inspecting the door control receiver, do not change the wiring route or the length of the harness around the receiver.

TM

INSTALLATION

NOTE:

The tire pressure warning receiver is integrated in the door control receiver.

1. INSTALL DOOR CONTROL RECEIVER
   CAUTION:
   - Do not drop the door control receiver or apply impact on it.
   - When replacing or inspecting the door control receiver, do not change the wiring route or the length of the harness around the receiver.
   (1) Engage the guide and install the door control receiver.

(2) Install the bolt.
Standard value:T=13N·m {133kgf·cm} {9.6ft·lbf}
(3) Connect the connector.

2. INSTALL PACKAGE TRAY TRIM PANEL ASSEMBLY (See page DL - 112)
3. INSTALL REAR WINDOW SIDE GARNISH LH (See page IT - 57)
4. INSTALL REAR WINDOW SIDE GARNISH RH
NOTE:
Use the same procedure described for the LH side.
5. INSTALL QUARTER TRIM LID SUB-ASSEMBLY LH (See page IT - 57)
6. INSTALL QUARTER TRIM LID SUB-ASSEMBLY RH
NOTE:
Use the same procedure described for the LH side.
7. INSTALL QUARTER LOWER TRIM LH (See page IT - 58)
8. INSTALL QUARTER LOWER TRIM RH
NOTE:
Use the same procedure described for the LH side.
9. CONNECT TRUNK TRIM COVER INN LH (See page IT - 58)
10. CONNECT TRUNK TRIM COVER INN RH
NOTE:
Use the same procedure described for the LH side.
11. INSTALL FRONT DOOR OPENING TRIM WEATHERSTRIP LH (See page IT-IT - 58)
12. INSTALL FRONT DOOR OPENING TRIM WEATHERSTRIP RH
NOTE:
Use the same procedure described for the LH side.
13. INSTALL FRONT DOOR SCUFF PLATE LH (See page IT - 58)
14. INSTALL FRONT DOOR SCUFF PLATE RH
NOTE:
Use the same procedure described for the LH side.
15. INSTALL SEPARATE TYPE REAR SEAT CUSHION ASSEMBLY LH (See page SE - 39)
16. INSTALL SEPARATE TYPE REAR SEAT CUSHION ASSEMBLY RH
NOTE:
Use the same procedure described for the LH side.

TIRE PRESSURE WARNING VALVE

COMPONENTS

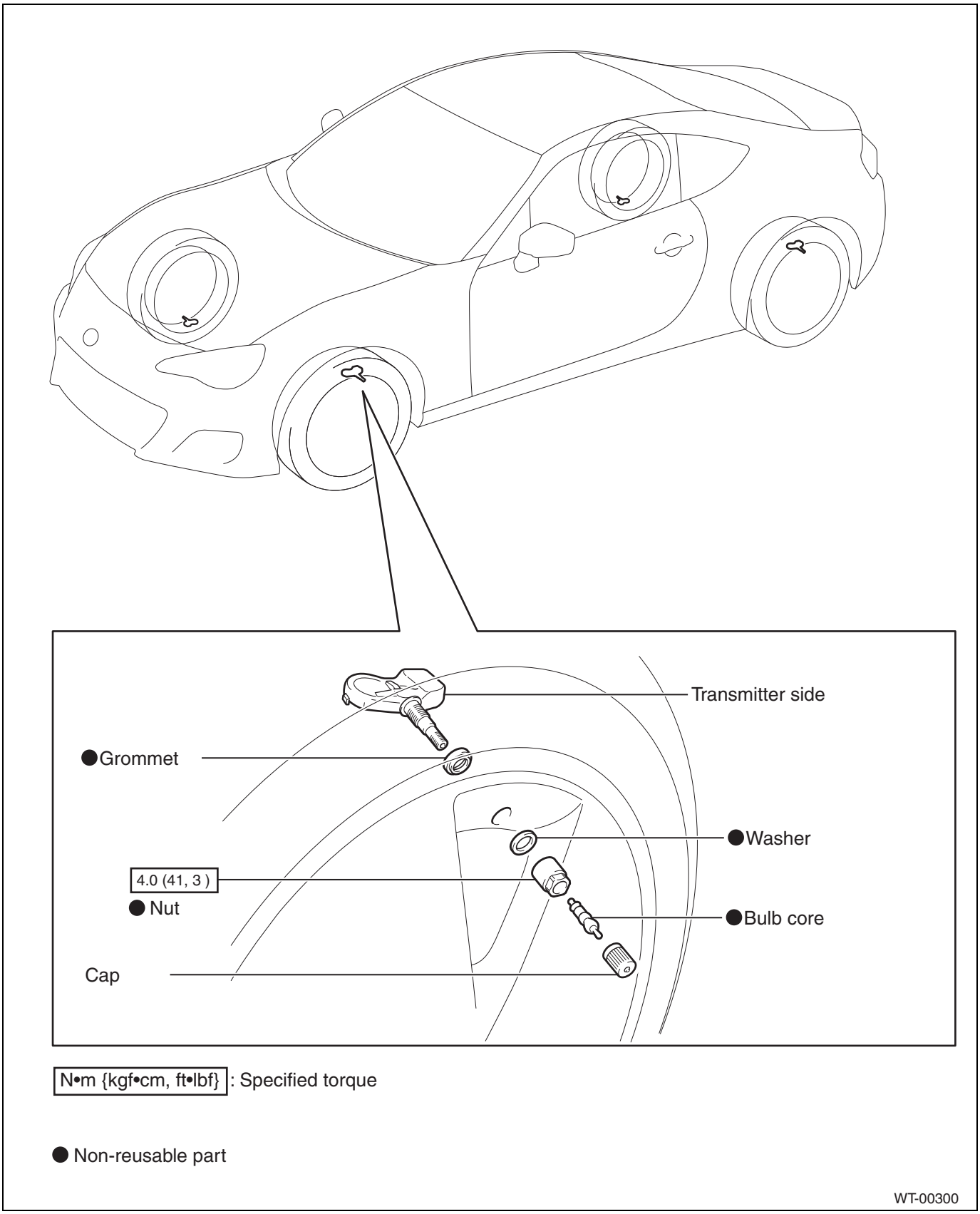

N•m {kgf•cm, ft•lbf} : Specified torque

● Non-reusable part

WT-00300

TM

REMOVAL

1. REMOVE FRONT WHEEL
2. REMOVE REAR WHEEL
3. REMOVE TIRE PRESSURE WARNING VALVE AND TRANSMITTER
   (1) Remove the cap and valve core to release the air from the tire.
   NOTE:
   Keep the removed cap.
   (2) After ensuring that a sufficient amount of air has been released, remove the nut and washer used to secure the tire pressure warning valve and transmitter. Drop the tire pressure warning valve and transmitter with the grommet into the tire.

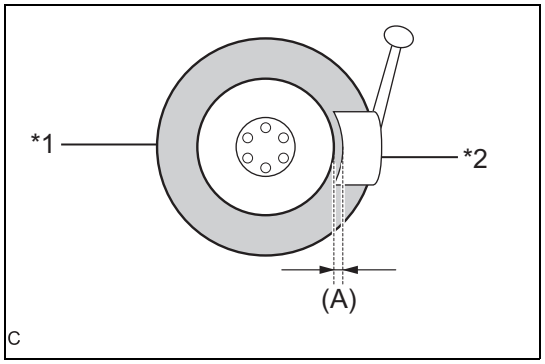

NOTE:
The grommet may remain attached to the rim.

   (3) After dropping the tire pressure warning valve and transmitter into the tire, disengage the bead using the shoe of a tire remover.

Text in Illustration

*1	Tire
*2	Shoe

CAUTION:
- Be careful not to damage the tire pressure warning valve and transmitter due to interference between the valve and the tire bead.
- Set the tire remover shoe as shown in the illustration.
  Width(A): 10 to 20 mm{0.394 to 0.787 in.}

   (4) Separate the upper bead.
   (5) Take out the tire pressure warning valve and transmitter with the grommet from the tire and separate the lower bead.
   (6) Remove the grommet from the tire pressure warning valve and transmitter.

INSTALLATION

CAUTION:
- Always use a new grommet, washer, nut and valve core when installing the tire pressure warning valve and transmitter.
- Make sure not to damage the urethane covered backside of the tire pressure warning valve and transmitter (the surface opposite to the side with the ID code) with anything sharp.
- If installing a new tire pressure warning valve and transmitter, write down the ID number before installation.
- Check that there is no oil, water or lubricant around the rim hole, tire pressure warning valve and transmitter, washer and nut. Failing to do so may result in improper installation.
- Use only a specified cap. If an unspecified cap is used, it may seize to the tire pressure warning valve and transmitter.

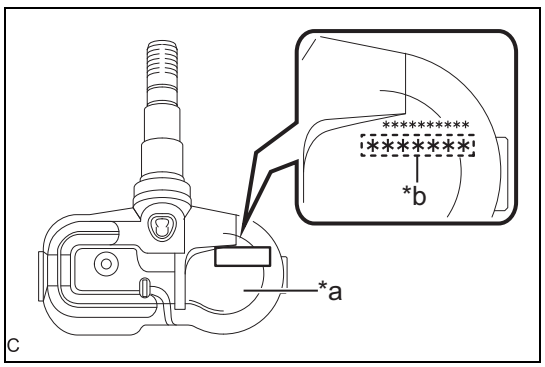

1. INSTALL TIRE PRESSURE WARNING VALVE AND TRANSMITTER
   (1) Install a new grommet to the tire pressure warning valve and transmitter.
   (2) Insert the tire pressure warning valve and transmitter into the valve installation hole from the inside of the rim so that the printed surface can be seen.

Text in Illustration

*a	Printed Surface
*b	7-digit Number Transmitter ID

CAUTION:
- Check that there is no visible deformation, damage, or other abnormalities on the tire pressure warning valve and transmitter.

TM

- Check that there is no foreign matter on the grommet and around the rim hole.
- If the tire pressure warning valve and transmitter is installed upside down, it may be damaged or fail to transmit signals when driving at high speeds.

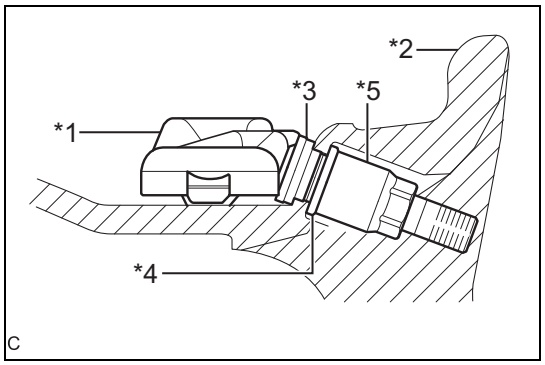

(3) From the outside of the rim, install a new washer onto the tire pressure warning valve and transmitter, and tighten a new nut.

Text in Illustration

*1	Tire Pressure Warning Valve and Transmitter
*2	Rim
*3	Grommet
*4	Washer
*5	Nut

Standard value:T=4.0N·m {41kgf·cm} {3.0ft·lbf}

CAUTION:
- After blowing air in, check the tightening torque again.
- Check that there is no foreign matter on the washer and nut.

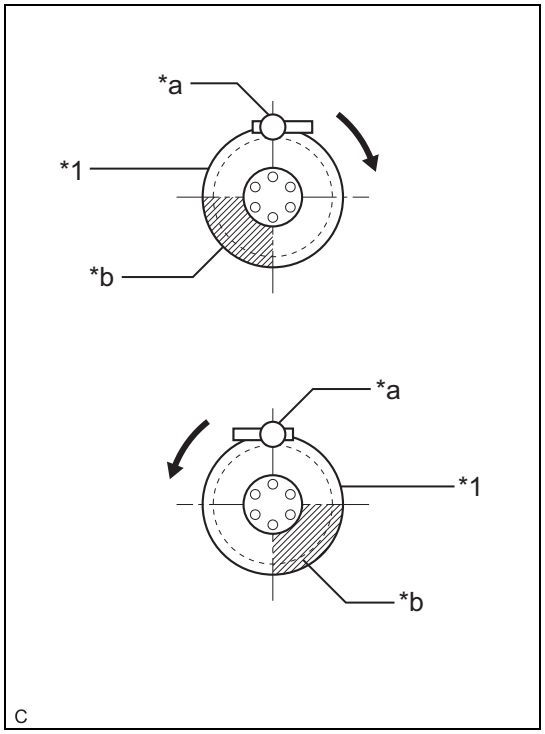

(4) Set the wheel onto the mounting machine and install the lower bead. Position the main body of the tire pressure warning valve and transmitter in the shaded area shown in the illustration.

Text in Illustration

*1	Rim
*a	Mount Tool of the Mounting Machine
*b	Area for Tire Pressure Warning Valve and Transmitter
➡	Rim Rotating Direction

CAUTION:
- If the tire pressure warning valve and transmitter is positioned outside this area, it will interfere with the tire bead and may be damaged.
- If the use of lubricant is required when installing the bead, do not apply lubricant directly to the tire pressure warning valve and transmitter.

(5) Install the upper bead.
CAUTION:
Make sure that the tire bead and tool do not interfere with the main body of the tire pressure warning valve and transmitter and that it is not clamped by the bead.

(6) Install the new valve core.

(7) After the tire is inflated, the valve nut may be loose. Retighten the nut to the specified torque.
Standard value:T=4.0N·m {41kgf·cm} {3.0ft·lbf}
CAUTION:
No further tightening is required once the nut is tightened to the specified torque.

(8) Check for air leaks with soapy water. If there is air leakage, push the valve core 2 or 3 times to remove any dirt attached to the valve core. If air continues to leak, replace the grommet, washer and nut.

(9) Install the cap.

2. INSTALL FRONT WHEEL
Standard value:T=120N·m {1224kgf·cm} {88.5ft·lbf}

3. INSTALL REAR WHEEL
Standard value:T=120N·m {1224kgf·cm} {88.5ft·lbf}

TM

4. INSPECT TIRES (refer to TW - 2).
5. REGISTER TRANSMITTER ID (refer to TM - 10).
6. REGISTER TRANSMITTER ID (refer to TM - 10).
7. INSPECT TIRE PRESSURE WARNING SYSTEM (refer to TM - 12).

DISPOSAL

CAUTION:

The tire pressure warning valve and transmitter is powered by a lithium battery. When disposing of the tire pressure warning valve and transmitter, remove the battery and dispose of it correctly.

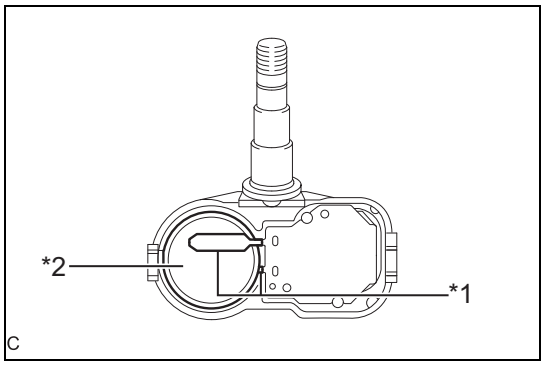

1. DISPOSE OF TIRE PRESSURE WARNING VALVE AND TRANSMITTER
   (1) Cut the 2 terminals that connect the battery to the base board to remove the battery.

Text in Illustration

*1	Terminal
*2	Lithium Battery

NOTE:

The battery and base board are covered with urethane.

Wheel & tire

Wheel and tire system

Inspection. TW-2

Temporary tire

Exploded view TW-3
Note TW-3
Replacement TW-3
Inspection. TW-4

Wheel and tire system

Inspection

1. Tire inspection
   (1) Check the tires for wear. Replace the tires if wear exceeds service limits.
   (2) Check the tire air pressure.

Cold air pressure

Tire size	Air pressure (front tire) (kPa {kgf/cm^2, psi})	Air pressure (rear tire) (kPa {kgf/cm^2, psi})
215/45R17 87W	240 {2.4, 35}	240 {2.4, 35}
215/40R18 85Y	240 {2.4, 35}	240 {2.4, 35}

Temporary tire

Tire size	Air pressure (front tire) (kPa {kgf/cm^2, psi})	Air pressure (rear tire) (kPa {kgf/cm^2, psi})
T135/80D 16 101M	420 {4.2, 60}	No
T145/70D 17 106M	420 {4.2, 60}	No

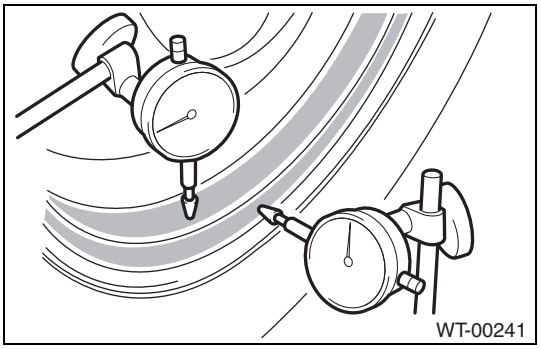

(3) Using a dial gauge, slowly rotate the wheel to check rim "runout".
- Aluminum wheel

Axial runout limit	Radial runout limit
1.0mm (0.039in)	

- Steel wheel

Axial runout limit	Radial runout limit
1.5 mm (0.059 in)	

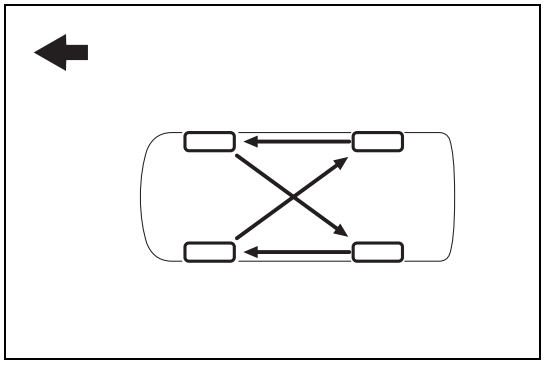

2. Tire rotation
   (1) Perform tire rotation as shown in the figure.

Captions in illustration

➡	Front of vehicle

3. Wheel balance inspection
   (1) Inspect the wheel balance (off-the-car balance) and adjust as necessary.
   Unbalance after inspection: 10 g {0.35 oz} or less
   (2) If symptoms such as tire vibration occur even after performing off-the-car balance adjustment, perform on-the-car adjustment as necessary.
4. Axial play inspection of front axle hub bearing (Refer to AD - 8)
5. Runout inspection of front axle hub bearing (Refer to AD - 8)
6. Axial play inspection of rear axle hub bearing (Refer to AD - 17)
7. Runout inspection and adjustment of rear axle hub bearing (Refer to AD - 18)

Temporary tire

Exploded view

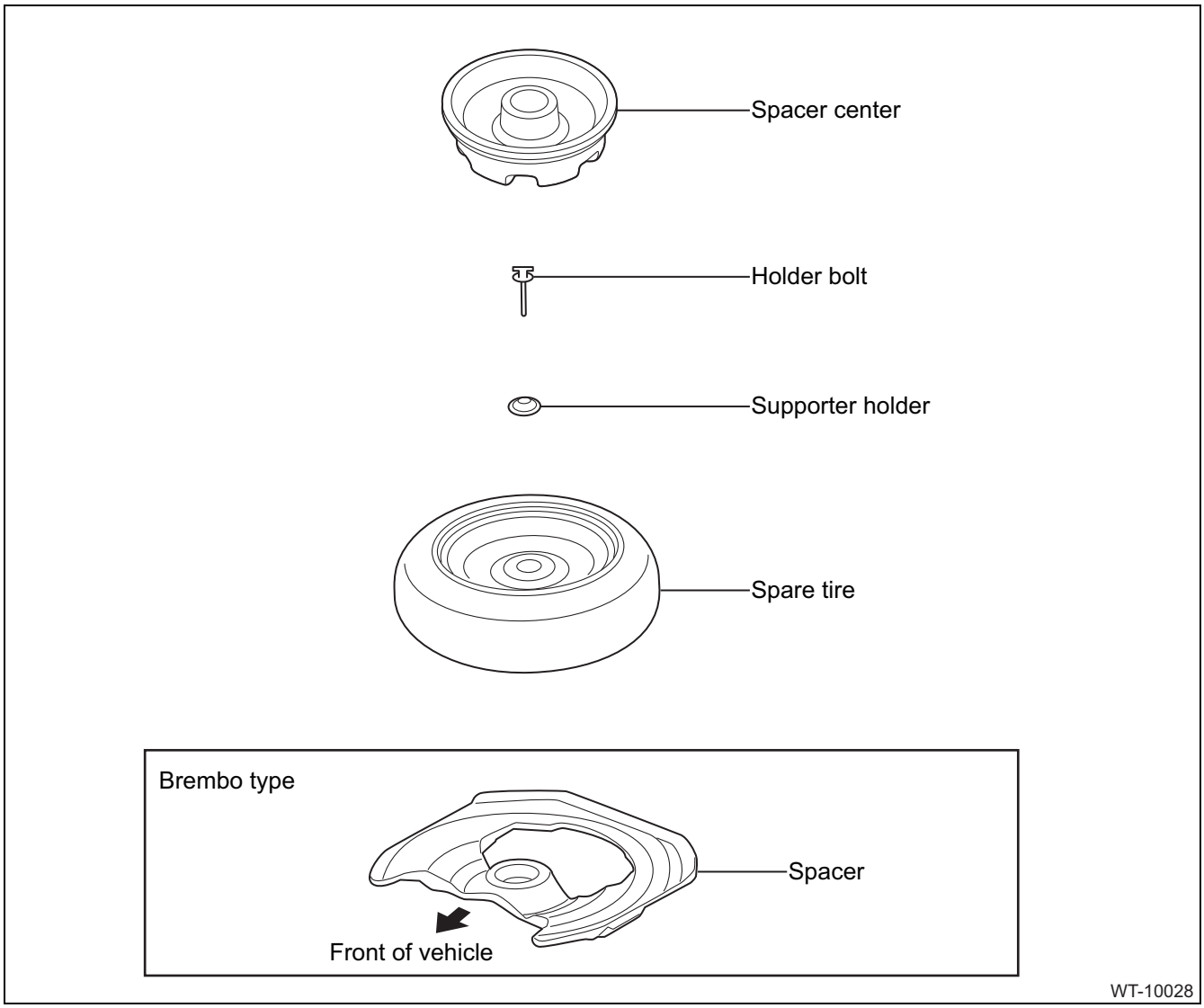

Note

"T-type" or "Temporary" tire for temporary use is equipped as a temporary tire.

CAUTION:

- The "T-type" or "Temporary" tire is only for temporary use. Replace with a standard equipment sized tire as soon as possible.
- Do not use standard sized tire chains for "T-type" or "Temporary" tires. Because tire size is small, tire chains can not be installed properly and will damage the vehicle and tires if they are detached while driving.
- Do not drive at a speed greater than 80 km/h (50 MPH).
- Drive the vehicle as slowly as possible and avoid bumps on the road.

TW

Replacement

When placing T145/70 D17 temporary tire back to the spare tire storage, make sure to install the spacer.

CAUTION:

- Install the spacer with "FT↑" mark facing the front of the vehicle and the rear end coming in contact with the vehicle.

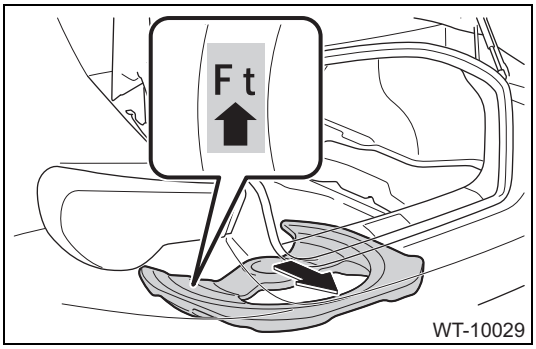

- When securing T145/70 D17 temporary tire, install the supporter holder as shown in the figure.

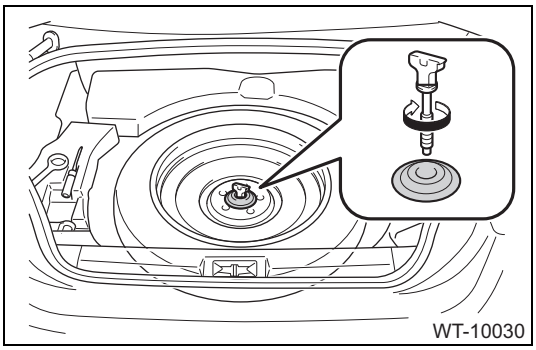

Inspection

Refer to "Inspection" in "Wheel and tire system" for inspection of the "T-type" or "Temporary" tire.

Brake control

Vehicle stability control system

Precautions BC-3
Function inspection BC-4
Parts location BC-5
List of diagnostic codes BC-6
Symptom table BC-7
Description of functions BC-8
How to troubleshoot BC-9
Check list for interview BC-11
Checking / clearing diagnostic codes BC-13
Freeze frame data BC-13
Failsafe list BC-14
Work support BC-15
Circuit figure BC-16
ECM terminal arrangement BC-19
Data monitor BC-20
C1201 . . . . . BC-22
C1225 . . . . . BC-23
C1226 . . . . . BC-23
C1227 . . . . . BC-23
C1228 . . . . . BC-23
C1468 . . . . . BC-23
C1469 . . . . . BC-23
C146A BC-23
C146B BC-23
C1231 . . . . . BC-24
C1234 . . . . . BC-27
C1419 . . . . . BC-27
C1472 . . . . . BC-27
C1474 . . . . . BC-27
C1237 . . . . . BC-28
C1241 . . . . . BC-34
C1246 . . . . . BC-36
C1249 . . . . . BC-40
C1288 . . . . . BC-45
C1294 . . . . . BC-46
C1300 . . . . . BC-46
C1330 . . . . . BC-47
C1331 . . . . . BC-47
C1464 . . . . . BC-47
C1465 . . . . . BC-47
C1332 . . . . . BC-52
C1333 . . . . . BC-52
C1466 . . . . . BC-52
C1467 . . . . . BC-52
C146C BC-57
C146E BC-60
C1492 . . . . . BC-62
C1493 . . . . . BC-62

C1494 . . . . . BC-64
C1495 . . . . . BC-64
U0073 . . . . . BC-66
U0100 . . . . . BC-66
U0101 . . . . . BC-66
U0126 . . . . . BC-66
U0140 . . . . . BC-66
ABS warning light remains ON BC-67
The ABS warning light does not illuminate BC-70
Brake warning light remains ON BC-71
The brake warning light does not illuminate BC-75
TRC OFF indicator light remains ON. BC-76
TRC OFF indicator light does not illuminate BC-76
Hill start assist ON indicator light remains ON. BC-79
Hill start assist ON indicator light does not illuminate BC-79
Vehicle stability control OFF indicator light remains ON BC-82
Vehicle stability control OFF indicator light does not illuminate. BC-82
TRACK indicator light remains ON BC-85
TRACK indicator light does not illuminate BC-85
Slip indicator light remains ON BC-88
The slip indicator light does not illuminate. BC-90

Brake actuator ASSY

Exploded view BC-92
Removal BC-93
Disassembly BC-96
Assembly BC-97
Installation BC-98

Front speed sensor

Exploded view BC-100
Removal BC-101
Installation BC-102

Rear speed sensor

Exploded view BC-104
Removal BC-104
Installation BC-106

Steering sensor

Exploded view BC-107
Removal BC-108
Installation BC-108

VSC (VDC) OFF switch

Exploded view BC-110
Removal BC-110
Installation BC-111
Unit inspection BC-111

Vehicle stability control system

Precautions

1. Cautions for troubleshooting
   (1) For malfunctions caused by a poor connection of terminals or parts, try reconnecting the relevant connector or parts. In some cases, this may temporarily or completely solve the problem.
   (2) To locate the malfunctioning part, check the operational status, including the diagnostic code output and freeze frame data output at the time the malfunction occurred and record them before disconnecting each connector or removing/attaching the relevant parts Also, if a circuit open error code for instantaneous interruption monitoring is output, monitor instantaneous interruption before disconnecting connectors. (Refer to BC - 20)
   (3) Considering a possibility that system other than the brake control system is affecting the malfunction, check diagnostic codes for other systems.
2. Precautions for handling and procedures
   (1) Unless otherwise specified for the check procedures, make sure that IG is OFF before removing or attaching actuators and sensors.
   (2) When the actuators and sensors have been removed or installed, perform a test mode check and diagnostic code output check to make sure that the normal display is output after all parts have been installed.
   (3) Vehicle stability control-related parts adjustment may become faulty after removal or installation. Do not remove or install them unless necessary.
   (4) When performing work related to Vehicle stability control, follow the instructions in this manual and make sure to perform all preparation work and confirm completion of the work.
3. Failsafe function
   (1) If an error occurred in a part of ABS/TRC/Vehicle stability control/brake assist system, relevant warning light and indicator light illuminate. At the same time, ABS, TRC, Vehicle stability control, and brake assist system stop the operations.
   NOTE:
   EBD control continues as long as possible even when ABS control stops. If EBD control stops, the brake warning light illuminates.
4. Precautions for diagnostic codes
   (1) As for some of the diagnostic codes, the warnings cannot be cleared only by repairing faulty parts.
   (2) To clear the warning, diagnostic codes must be cleared or the procedures below must be followed.

Warning clearance procedures

Diagnostic codes	Procedures
C1464 C1465 C1466 C1467 C146C	1. Replacement with new one or repair 2. IG ON 3. Drive (20 km/h or more for 30 seconds) →ABS warning light goes OFF
C1246	1. Replacement with new one or repair 2. Stop the vehicle for 5 seconds or longer with IG turned ON and lightly depress the brake pedal several times. 3. Strongly depress the brake pedal 3 times for 3 seconds while driving at the speed of 50 km/h or more →ABS warning light goes OFF

CAUTION:
- Be careful to drive and stop the vehicle while the warning is being issued because the system does not have a fail-safe function.
- Currently issued diagnostic codes are stored in memory again.

5. Precautions for CAN communication
   (1) Data communication in skid control computer (brake actuator ASSY) uses CAN communication. If CAN communication line has a problem, a diagnostic code of communication line error is output.
   (2) If a CAN communication error code is output, repair the cause of fault in the communication line and troubleshoot the Vehicle stability control system under normal data communication conditions.
   (3) The length and route of each CAN communication line is specified. Therefore they cannot be fixed or repaired using bypass wire harness for a temporal fix or repair.

Function inspection

1. Initial check of brake system indicator light
   (1) Turn the ignition switch to ON.
   (2) Check that the ABS warning light, the brake warning light, the TRC OFF indicator light, the vehicle stability control OFF indicator light, the TRACK indicator light and the slip indicator light illuminate and that they go off in approx. 3 seconds.
   NOTE:
   When any one of the lights does not illuminate, check the combination meter ASSY.
2. Brake actuator operation check
   (1) Preparation for inspection
   (a)Connect SSM4 to DLC3 with IG turned OFF, and start the engine.
   (b)Turn SSM4 ON, and select [Brake Control System] →[Work Support] →[Function Check Sequence].

Parts location

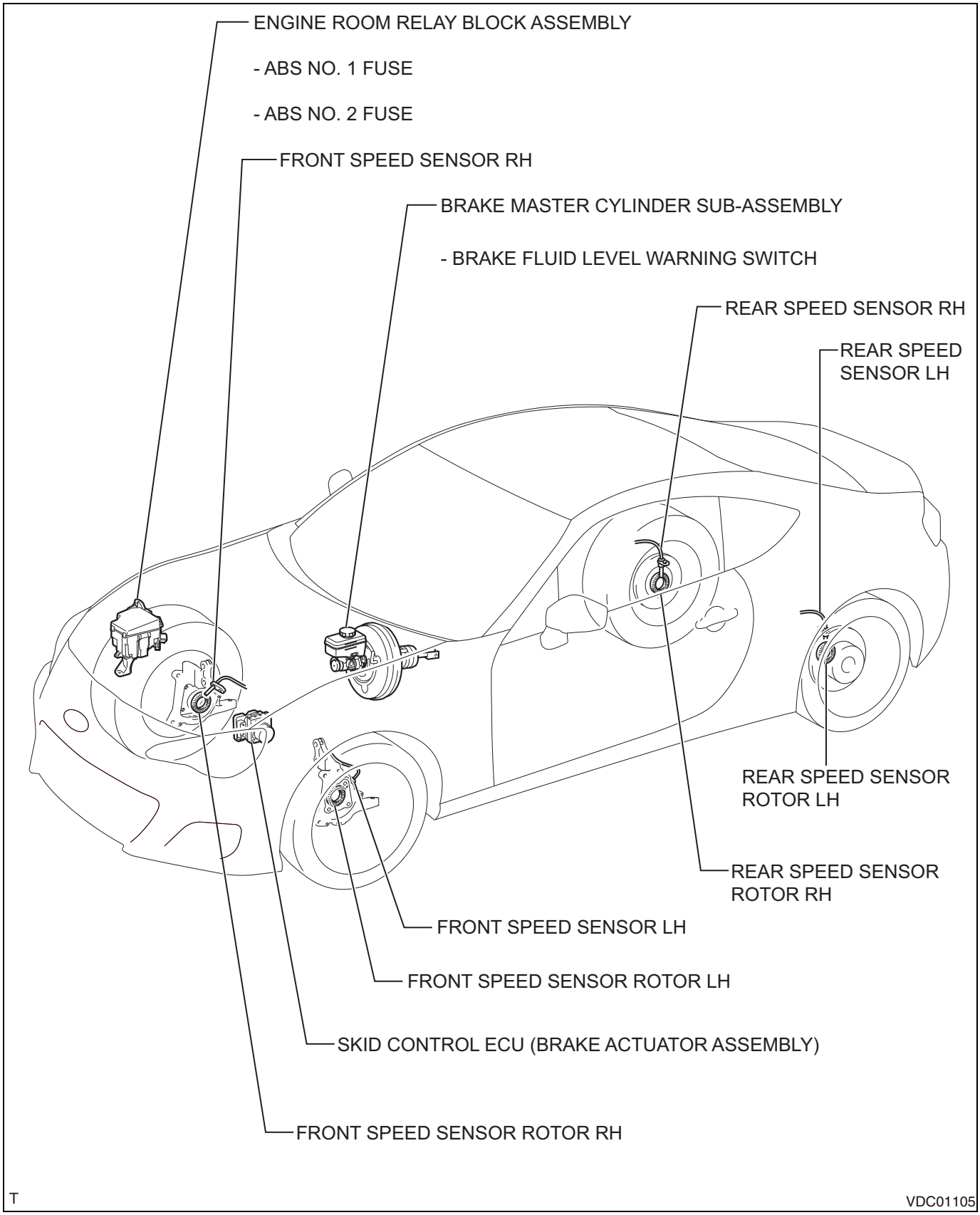

BC

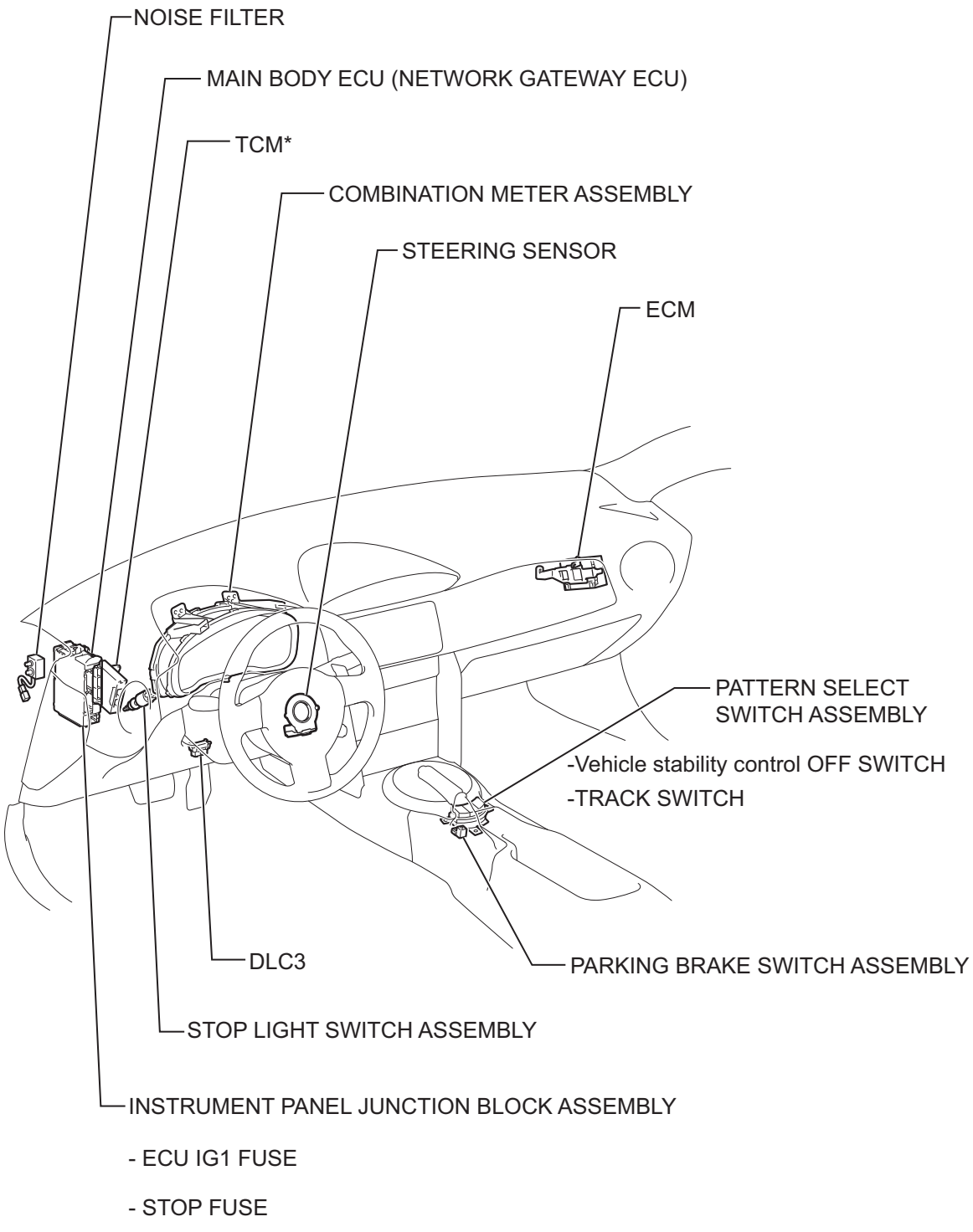

*: for Automatic Transmission

VDC10127

BC

List of diagnostic codes

Diagnostic code list

Diagnostic codes	Diagnostic items	Code, stored in memory	Reference pages
C1201	[EGI abnormal]	0	BC - 22

Diagnostic codes	Diagnostic items	Code, stored in memory	Reference pages
C1225	[Normal Opening Valve 1 malfunction]	0	BC - 23
C1226	[Normal Opening Valve 2 malfunction]	0	BC - 23
C1227	[Normal Closing Valve 1 malfunction]	0	BC - 23
C1228	[Normal Closing Valve 2 malfunction]	0	BC - 23
C1231	[Steering Angle Sensor abnormal]	0	BC - 24
C1234	[Yaw rate sensor abnormal]	0	BC - 27
C1237	[System Failure]	0	BC - 28
C1241	[Power Supply Voltage Failure]	0	BC - 34
C1246	[Pressure Sensor]	0	BC - 36
C1249	[BLS Malfunction]	0	BC - 40
C1288	[Incorrect VDC Control Module specifications]	0	BC - 45
C1294	[AT abnormal]	0	BC - 46
C1300	[Electrical Control Module]	0	BC - 46
C1330	[Front Right ABS Sensor Circuit Open or Shorted Battery]	0	BC - 47
C1331	[Front Left ABS Sensor Circuit Open or Shorted Battery]	0	BC - 47
C1332	[Rear Right ABS Sensor Circuit Open or Shorted Battery]	0	BC - 52
C1333	[Rear Left ABS Sensor Circuit Open or Shorted Battery]	0	BC - 52
C1419	[G Sensor Failure]	0	BC - 27
C1464	[Front Right ABS Sensor Signal]	0	BC - 47
C1465	[Front Left ABS Sensor Signal]	0	BC - 47
C1466	[Rear Right ABS Sensor Signal]	0	BC - 52
C1467	[Rear Left ABS Sensor Signal]	0	BC - 52
C1468	[FR Valve]	0	BC - 23
C1469	[FL Valve]	0	BC - 23
C146A	[RR Valve]	0	BC - 23
C146B	[RL Valve]	0	BC - 23
C146C	[Motor Relay]	0	BC - 57
C146E	[Valve Relay]	0	BC - 60
C1472	[Lateral G Sensor abnormal]	0	BC - 27
C1474	[Longitudinal G Sensor abnormal]	0	BC - 27
C1492	[Clutch Switch OFF Malfunction]	0	BC - 62
C1493	[Clutch Switch ON Malfunction]	0	BC - 62
C1494	[Reverse Switch OFF Stuck]	0	BC - 64
C1495	[Reverse Switch ON Stuck]	0	BC - 64
U0073	[Control Module Communication Bus "A" Off]	0	BC - 66
U0100	[Lost Communication With ECM/PCM "A"]	0	BC - 66
U0101	[Lost Communication With TCM]	0	BC - 66
U0126	[Lost Communication With Steering Angle Sensor Module]	0	BC - 66
U0140	[Lost Communication With Body Control Module]	0	BC - 66

Symptom table

1. Symptom table

   (1) If normal diagnostic codes are output, but a malfunction occurs, follow the table below and check the relevant circuit for each symptom.

   NOTE:

   Refer to the flow chart for maintenance parts.

Symptom table for VSC system

Symptoms	Inspection items	Reference pages
ABS warning light remains ON	Refer to the flow chart "ABS warning light remains ON".	BC - 67
The ABS warning light does not illuminate	Refer to the flow chart "The ABS warning light does not illuminate".	BC - 70
Brake warning light remains ON	Refer to the flow chart "brake warning light remains ON".	BC - 71
The brake warning light does not illuminate	Refer to the flow chart "The brake warning light does not illuminate".	BC - 75
TRC OFF indicator light remains ON	Refer to the flow chart "TRC OFF indicator light remains ON".	BC - 76
TRC OFF indicator light does not illuminate	Refer to the flow chart "TRC OFF indicator light does not illuminate".	BC - 76

Symptoms	Inspection items	Reference pages
Hill start assist ON indicator light remains ON	Refer to the flow chart “Hill start assist ON indicator light remains ON”.	BC - 79
Hill start assist ON indicator light does not illuminate	Refer to the flow chart “Hill start assist ON indicator light does not illuminate”.	BC - 79
Vehicle stability control OFF indicator light remains ON	Refer to the flow chart "Vehicle stability control OFF indicator light remains ON".	BC - 82
Vehicle stability control OFF indicator light does not illuminate	Refer to the flow chart "Vehicle stability control OFF indicator light does not illuminate".	BC - 82
TRACK indicator light remains ON	Refer to the flow chart “TRACK indicator light remains ON”.	BC - 85
TRACK indicator light does not illuminate	Refer to the flow chart “TRACK indicator light does not illuminate”.	BC - 85
Slip indicator light remains ON	Refer to the flow chart "Slip indicator light remains ON".	BC - 88
The slip indicator light does not illuminate	Refer to the flow chart "Slip indicator light does not illuminate".	BC - 90

Description of functions

1. Anti-lock brake system (ABS)
   (1) Helps prevent wheel lock when the brakes are applied quickly or on a slippery road surface.
2. Electronic brake distribution control (EBD)
   (1) The EBD control uses the ABS to control distribution of brake force to front and rear wheels depending on driving conditions. Also, the system controls application of braking force to right and left wheels to stabilize vehicle motion while cornering.
3. Brake assist (BA)
   (1) The main purpose of brake assist is to provide additional braking force for a driver who cannot depress the brake pedal hard when hard braking is needed. With this assist, braking performance of the vehicle is assured.
4. Traction control (TRC)
   (1) Controls slipping of driving wheels when the driver depress the accelerator pedal too far to starts or accelerates the vehicle on a slippery surface.
5. Vehicle stability control
   (1) Controls vehicle skidding sideways when vehicle is apt to understeer or oversteer excessively while cornering.
6. Parts function

Parts		Function
Brake actuator ASSY	Skid control ECM	Based on signals from sensors and switches, identifies driving conditions and sends brake control signal to the brake actuator ASSY.
	Master cylinder pressure sensor	Detects master cylinder pressure.
	Pump motor	Activates the pump in the brake actuator ASSY.
	Solenoid valve	• The hydraulic circuit has two master cylinder cut solenoid valves, two intake solenoid valves, four retaining solenoid valves, and four relief solenoid valves. • To control a hydraulic pressure applied to the wheel cylinder, switches the hydraulic circuits based on the signal from the skid control during operation of the brake control system.
	Yaw rate and acceleration sensors	• The yaw rate sensor detects the vehicle yaw rate. • The acceleration sensor detects longitudinal acceleration and lateral acceleration of the vehicle.
Skid control ECM	ABS motor relay	Provides power supply to the pump motor.
	ABS solenoid relay	Provides power supply to the solenoid valve.
Speed sensor		Detects four wheels and speed of each wheel.
Console switch ASSY	Vehicle stability control OFF switch	Normal mode, TRC OFF mode, or Vehicle stability control OFF mode is selectable.
	TRACK switch	Either normal mode or TRACK mode is selectable.
Stop light switch ASSY		Detects the brake pedal signal issued when the pedal is depressed.
Main body ECM (multiplex network body ECM)		Sends parking brake switch signal to the skid control ECM.

Parts	Function
Parking brake switch ASSY	Detect the condition of the parking brake pedal.
ECM	• Sends signals including the accelerator pedal opening angle signal and the engine speed signal to the skid control ECM. • Controls the engine output based on the signal received from the skid control ECM.
TCM	Sends gear position signal to the skid control ECM.
Steering angle sensor	Detects the steering direction of a steering wheel and the steering wheel angle.

Parts		Function
Combination meter ASSY	ABS warning light	When the skid control ECM detects an ABS malfunction, it illuminates to let the driver know the malfunction occurrence.
	Brake warning light	• When the skid control ECM detects an EBD malfunction or a brake system malfunction, it illuminates to let the driver know the malfunction occurrence. • When the brake fluid level is low, it illuminates to let the driver know the condition. • When the parking brake is operated, it illuminates to let the driver know the operation.
	TRC OFF indicator light	When the TRC OFF mode is selected, it illuminates to let the driver know the selection.
	Vehicle stability control OFF indicator light V	When the Vehicle stability control OFF mode or Vehicle stability control SPORT mode is selected, it illuminates to inform the driver of the selection.
	TRACK indicator light	When the TRACK mode is selected, it illuminates to inform the driver of the selection.
	Slip indicator light	• When TRC control or Vehicle stability control is taking place, it flashes to inform the driver that the control is active. • When the skid control ECM detects a TRC malfunction and/or a Vehicle stability control malfunction, it illuminates to inform the driver of the malfunction occurrence.

How to troubleshoot

1	Bring in the car

Next

2	Interview and phenomenon check

Next

3	Battery voltage check

(1) Check the battery voltage.
Voltage: 11 to 14V
NOTE:
If the battery voltage is less than 11 V, recharge or replace the battery before starting the diagnostic procedures.

Next

BC

4	Diagnostic code and freeze frame data check (Refer to BC - 13)

(1) Check and record the diagnostic code and the freeze frame data.
(2) Clear the diagnostic code and the freeze frame data.
(3) Diagnostic code list recheck
  (a) Based on the recorded diagnostic code and the freeze frame data, reproduce the malfunction and check the diagnosis code again.
  NOTE:
  - When a diagnostic code is output, refer to “List of diagnostic codes (BC - 6)”.
  - If an error code for CAN communication system is output, first troubleshoot CAN communication and repair it. (Refer to BC - 66)
  - If SSM4 cannot communicate with skid control computer (brake actuator ASSY), check CAN communication. (Refer to NW - 30)
  - If there is no respond from the skid control computer (brake actuator ASSY), check the power and voltage input circuit for the skid control computer (brake actuator ASSY). (Refer to BC - 34)

Result

Result	Go to
Diagnostic code is not output. Malfunction can be checked and reproduced.	A
Diagnostic code is output.	B
Diagnostic code is not output. Malfunction cannot be checked and reproduced.	C

B → Refer to "List of diagnostic codes (BC - 6)" and perform troubleshooting for each code. Then go to step 7.

C → Go to "Malfunction simulation (IN - 32)".

A

5	Symptom table (Refer to BC - 7)

Result

Result	Go to
Not applicable to the symptom table.	A
Applicable to the symptom table.	B

BC

B → Perform troubleshooting for relevant symptom and go to step 8.

A

6	Perform troubleshooting in the following procedures according to the trouble phenomenon.

(1) Data monitor (Refer to BC - 20)
(2) Function inspection (Refer to BC - 4)
(3) ECM terminal arrangement (Refer to BC - 19)

Next

7	Adjustment, repair, or replacement

Next

8	Confirmation test

Next

Complete

Check List for Interview

Details of vehicle			
Customer's name		Registration year and date	
		Vehicle bring-in date	
		Vehicle delivery (planned) date	
Registration No.		Odometer reading	
Frame No.		-	

Result of interview	
Date trouble occurred	
Frequency of trouble occurrence	□ Continuous □ Sometimes occurs (times per day/week/month)
Location where the vehicle is used mainly	□ Inner city □ Suburbs □ Mountain side □ Other ( )
Frequency of usage	□ Almost everyday □ Sometimes occurs (times per day/week/month)
Contents of interview	Conditions before the trouble occurred (Was there an unusual phenomenon or operation?)
	Conditions when the trouble occurred (When, where, what, how/as detailed as possible)
	Conditions after the trouble occurred (What kind of operations?/ Warning indicator/Engine could be started or not?/How was the vehicle?/etc.)
Driving condition	Vehicle speed ( ) □ At starting □ When accelerating □ When driving at a steady speed □ When decelerating □ When braking □ When stopped □ When parking □ When turning □ Other ( )
Road condition	□ Flat (level) road □ Slope (uphill and downhill) □ Dry paved road □ Wet paved road □ Rugged paved road □ Unpaved road □ Snow-covered/hardened snow-covered/icy road □ Bump/curbstone □ Other ( )

Result of interview	
Operational conditions	Brake pedal operation: □ Moderate brake □ Sudden brake □ Operation with left foot □ Condition when brake is not applied. Acceleration operation: □ When depressing the brake pedal □ Keep depressing the brake pedal □ When depressing the brake pedal less □ When releasing the brake pedal
Vehicle's condition	Vehicle's usage condition: □ While leaving the vehicle (Time/day) □ Before starting the ignition (when IG is turned ON) □ At starting/right after starting □ After starting (minutes later) □ After starting (minutes later) Engine Condition: □ While engine is stopping □ While engine is running Shift position (display) condition: □ Shift position ( ) □ Shift position (→when operating) □ No display □ Unknown Warning light illumination status: □ ABS □ Brake □ TRC OFF □ Vehicle stability control OFF □ TRACK □ Slip □ Other ( ) Other (Electric load, remaining fuel level, etc.): □ ( ) □ ( ) □ ( )

Diagnostic codes

ABS/Vehicle stability control system	Output code
1st	
2nd	
th time	
Diagnostic code except for ABS/Vehicle stability control system	

Freeze frame data

Item name	Recorded value	Unit
Time elapsed after the system froze		msec
Number of turning IG ON after the system froze		-
Stop light switch	OFF/ON	-
Gear position information*	Unknown/Lo/2nd/3rd/4th/5th/6th/P, N/R	-
System in operation	ABS / VSC / TRC / HBA / HAC	-
Yaw rate sensor		°/s
Lateral G sensor		m/s^2
Longitudinal G sensor		m/s^2
Wheel speed FR		km/h
Wheel speed FL		km/h
Wheel speed RR		km/h
Wheel speed RL		km/h
Accelerator pedal opening rate		%
Steering angle sensor		°
TRC/VSC OFF mode	Normal / TRC OFF / VSC OFF	-

Item name	Recorded value	Unit
VSC SPORT mode	Normal/SPORT mode	-

*: Transmission A/T

Checking / clearing diagnostic codes

1. Diagnostic code output check
   (1) Diagnostic code reading by SSM4
      (a)Turn the ignition switch to OFF and connect the SSM4 to the DLC3.
      (b)Turn IG ON and follow SSM4's display to read the diagnostic code.
         CAUTION:
         If there is an error, clear the diagnostic code memory after repairing.
2. Clear the diagnostic code and the freeze frame data.
   (1) Diagnostic code clearance by SSM4
      (a)Turn the ignition switch to OFF and connect the SSM4 to the DLC3.
      (b)Turn IG ON and follow SSM4's display to clear the diagnostic code.

Freeze frame data

1. Check freeze frame data output
   (1) Using SSM4, you can check the vehicle (sensor) conditions when an abnormal diagnostic code is stored in memory.
2. Freeze frame data check when a diagnostic code is stored in memory
   (1) If a diagnostic code is output, the freeze frame data at the time of error code occurrence is stored in memory.
   (2) When the freeze frame data at the time of diagnostic code occurrence is stored in memory, the data will not be updated or cleared until the memory data is cleared (until the diagnostic code is cleared).
   (3) It saves and displays the record, which is up to 31 times of turning IG OFF →ON since the error code has been stored in memory.
      NOTE:
      The number of turning IG ON exceeds 31, "31" is displayed.
   (4) Freeze frame data check when a diagnostic error code is stored in memory
      (a)Connect the SSM4 to the DLC3 and turn the ignition to IG ON.
      (b)Display the error code on the diagnostic code confirmation screen. (Refer to BC - 13)

List of freeze frame data

Item name	Description/display range	Normal value	Remarks
Stop light switch	Indicates the stop light switch's status. Display range: OFF/ON	OFF: Brake pedal, released ON: Brake pedal, depressed	-
Gear position information*	Indicates the gear position of the transmission. Display range: Unknown/Lo/2nd/3rd/4th/5th/6th/P, N/R	Indicates the gear position (speed) of the transmission.	-
System in operation	Indicates operation status of each system. Display range: ABS / VSC / TRC / HBA	-	Indicates operation status of each system.
Yaw rate sensor	Indicates yaw rate. Display range: -128 to 127°/s	When stopping: 0°/s When making right turn: -128 to 0°/s When making left turn: 0 to 127°/s	-
Lateral G sensor	Indicates lateral G. Display range: -25.10 to 24.90m/s^2	When turning: Varies in proportion to the generated G.	-
Longitudinal G sensor	Indicates longitudinal G. Display range: -25.10 to 24.90m/s^2	While accelerating: Varies in proportion to the generated G.	-
Wheel speed FR	Indicates the front right wheel speed. Display range: 0.0 to 326.4km/h	When stopping: 0km/h While driving at a stable speed: No significant fluctuation	-
Wheel speed FL	Indicates the front left wheel speed. Display range: 0.0 to 326.4km/h	When stopping: 0km/h While driving at a stable speed: No large changes.	-

Item name	Description/display range	Normal value	Remarks
Wheel speed RR	Indicates the rear right wheel speed. Display range: 0.0 to 326.4km/h	When stopping: 0km/h While driving at a stable speed: No large changes.	-
Wheel speed RL	Indicates the rear left wheel speed. Display range: 0.0 to 326.4km/h	When stopping: 0km/h While driving at a stable speed: No large changes.	-
Accelerator pedal opening rate	Indicates the accelerator pedal opening rate. Display range: 0.0 to 100.0%	While the accelerator pedal is being operated: Varies in proportion to the amount the pedal is depressed. When the accelerator pedal is not operated: Approximately 0 %	-
Steering angle sensor	Indicates the steering angle (plus value when steering to left). Display range: -719.9 to 719.9°	While steering to left: Continuously varying positive values While steering to right: Continuously varying negative values	-
TRC/VSC OFF mode	Indicates the status for TRC/Vehicle stability control OFF mode. Display range: Normal / TRC OFF / VSC OFF	Normal mode: When TRC, Vehicle stability control permitted TRC OFF mode: When TRC prohibited VSC OFF mode: When Vehicle stability control, TRC prohibited	-
VSC SPORT mode	Indicates the status for Vehicle stability control SPORT mode. Display range: Normal/SPORT mode	Normal: In normal mode SPORT: In Vehicle stability control SPORT mode	-

*: Transmission A/T

Failsafe list

1. Fail safe operation
   NOTE:
   - If there is a malfunction in the sensor signal or the actuator system, the skid control ECM prohibits the power supply to the brake actuator ASSY.
   - In response to the signal received from the skid control ECM, the brake actuator turns the solenoid off. Under this condition, the vehicle operates in the same way as those vehicles without ABS, TRC, and Vehicle stability control systems.
   - The EBD control continues to function in a range where the control is possible, although ABS control is prohibited. When the EBD control becomes impossible, the brake warning light illuminates and the driver is warned of the condition.
   - When a malfunction occurs in the Vehicle stability control system components before the Vehicle stability control takes place, the Vehicle stability control will be prohibited. When a malfunction occurs in the system components while the Vehicle stability control is active, the system will be disabled.
   - When its steady control becomes impossible, the warning light illuminates and the driver is warned of the cancellation of system control. (Refer to BC-24)

ABS, EBD, and BA systems

Item	Operation
ABS system malfunction	ABS, BA, TRC, and Vehicle stability control are prohibited.
BA system malfunction	ABS, BA, TRC, and Vehicle stability control are prohibited.
EBD system malfunction	ABS, EBD, BA, TRC, and Vehicle stability control are prohibited.

BC

TRC and Vehicle stability control system

Item	Operation
Malfunction of engine control system (TRC and Vehicle stability control system)	Before control takes place: Disables the control. Control ON: Control with brake only
Malfunction of automatic transmission control system (TRC and Vehicle stability control system)	Disables the control.
Malfunction of brake control system (Vehicle stability control system)	Disables the control.
Brake control system malfunction (TRC system)	Before control takes place: Disables the control. Control ON: The control is disabled.

Work support

1. VSC(VDC) Centering Mode

   CAUTION:

   - When the skid control computer (brake actuator ASSY) or the brake actuator ECM has been replaced, make sure to perform VDC sensor midpoint setting.
   - Make sure to perform [VSC(VDC) Centering Mode] on a level surface (grade of 1 % or less). While centering, do not shake the vehicle or open/close a door.

   NOTE:

   When performing [VSC(VDC) Centering Mode], make sure to set zero point of yaw rate sensor & G sensor (brake actuator ASSY is integrated) and steering sensor.

   (1) Turn the ignition switch to OFF.
   (2) Shift into neutral and apply the parking brake.
   (3) Connect the SSM4 to the DLC3.
   (4) Turn the ignition switch to ON.
   (5) Set the steering wheel in a straight position.
   (6) On the SSM4 screen, select [Brake Control System] →[Work Support] →[VSC(VDC) Centering Mode].
   (7) Following the SSM4 screen, perform [VSC(VDC) Centering Mode].

2. Changing modes

   - When it is necessary to temporarily stop the control while operating the vehicle on a device such as free rollers, enter into the check mode. While in the check mode, DTCs listed in the list may be stored.
   - If any DTCs are stored, clear the DTCs using SSM4. After turning IG OFF→ON, the conditions are normal if speed sensor related DTCs are not stored.

Code list

Code no. [SAE]	Content of diagnosis
C1271	FR wheel speed sensor signal, lost
C1272	FL wheel speed sensor signal, lost
C1273	RR wheel speed sensor signal, lost
C1274	RL wheel speed sensor signal, lost
C1275	FR wheel speed sensor signal error
C1276	FL wheel speed sensor signal error
C1277	RR wheel speed sensor signal error
C1278	RL wheel speed sensor signal error

Circuit figure

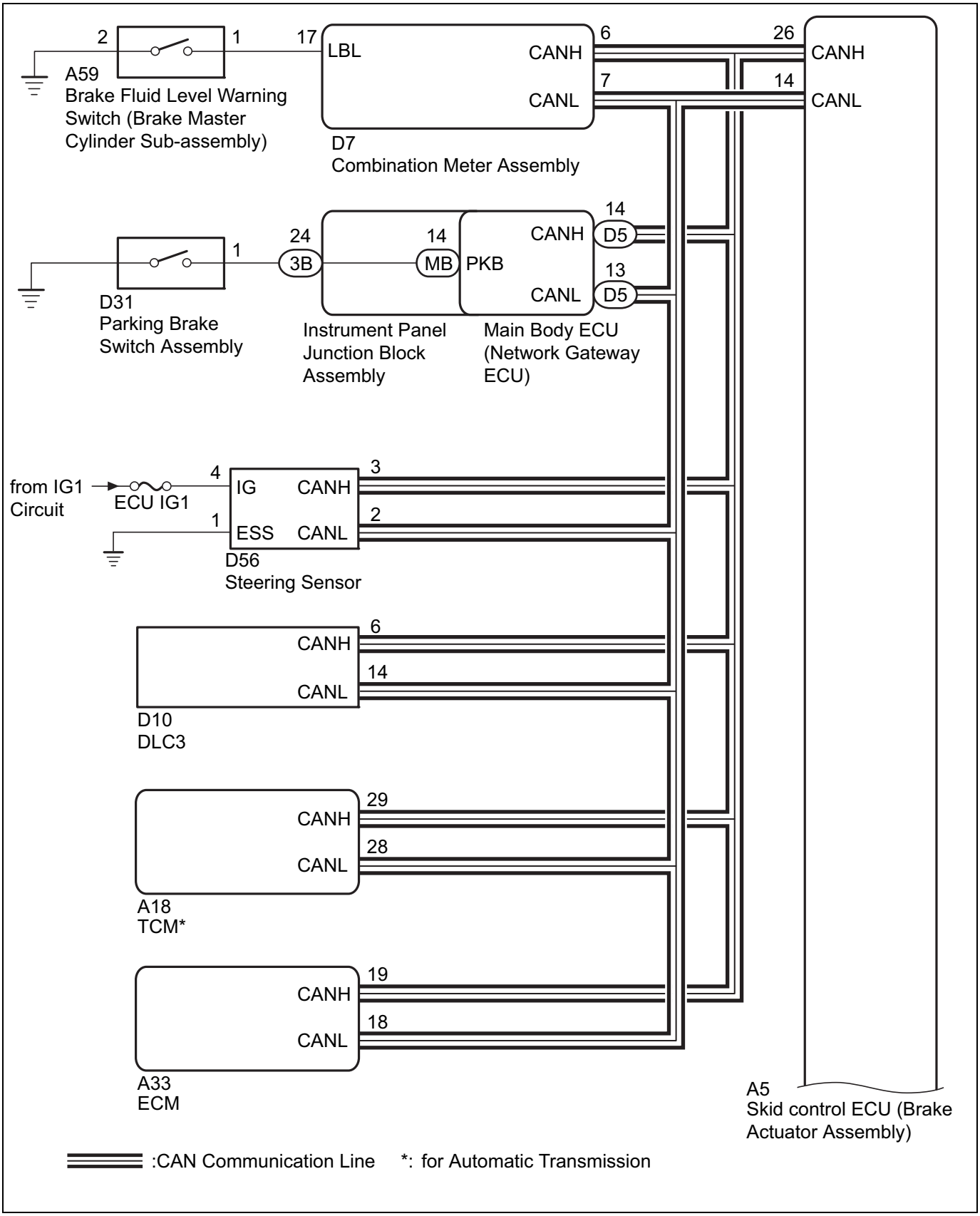

BC

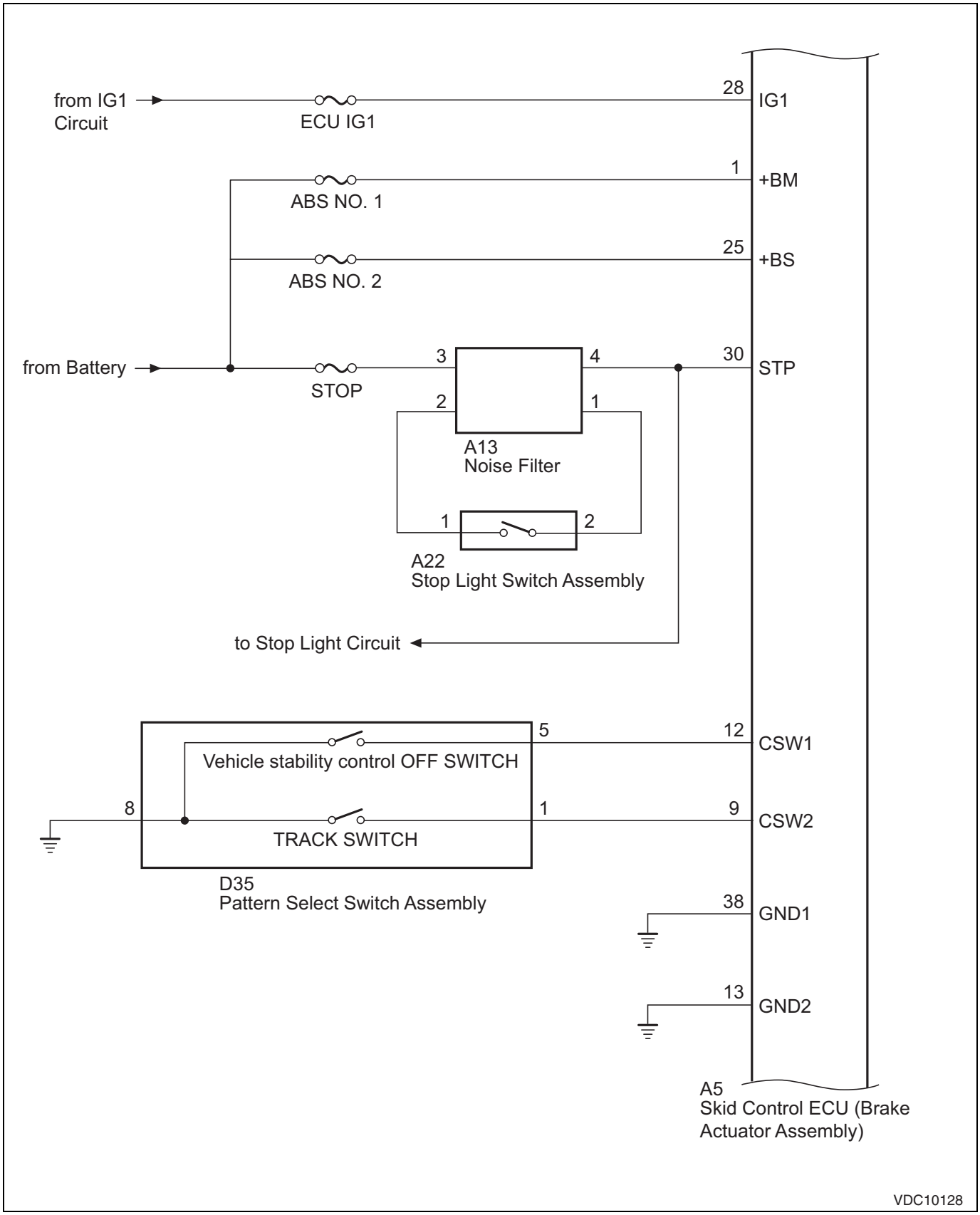
from IG1
Circuit
ECU IG1
28
IG1
1
+BM
ABS NO. 1
25
+BS
ABS NO. 2
from Battery
STOP
3
4
30
STP
2
1
A13
Noise Filter
1
2
A22
Stop Light Switch Assembly
to Stop Light Circuit
5
12
CSW1
Vehicle stability control OFF SWITCH
8
1
9
CSW2
TRACK SWITCH
D35
Pattern Select Switch Assembly
38
GND1
13
GND2
A5
Skid Control ECU (Brake
Actuator Assembly)
VDC10128

BC

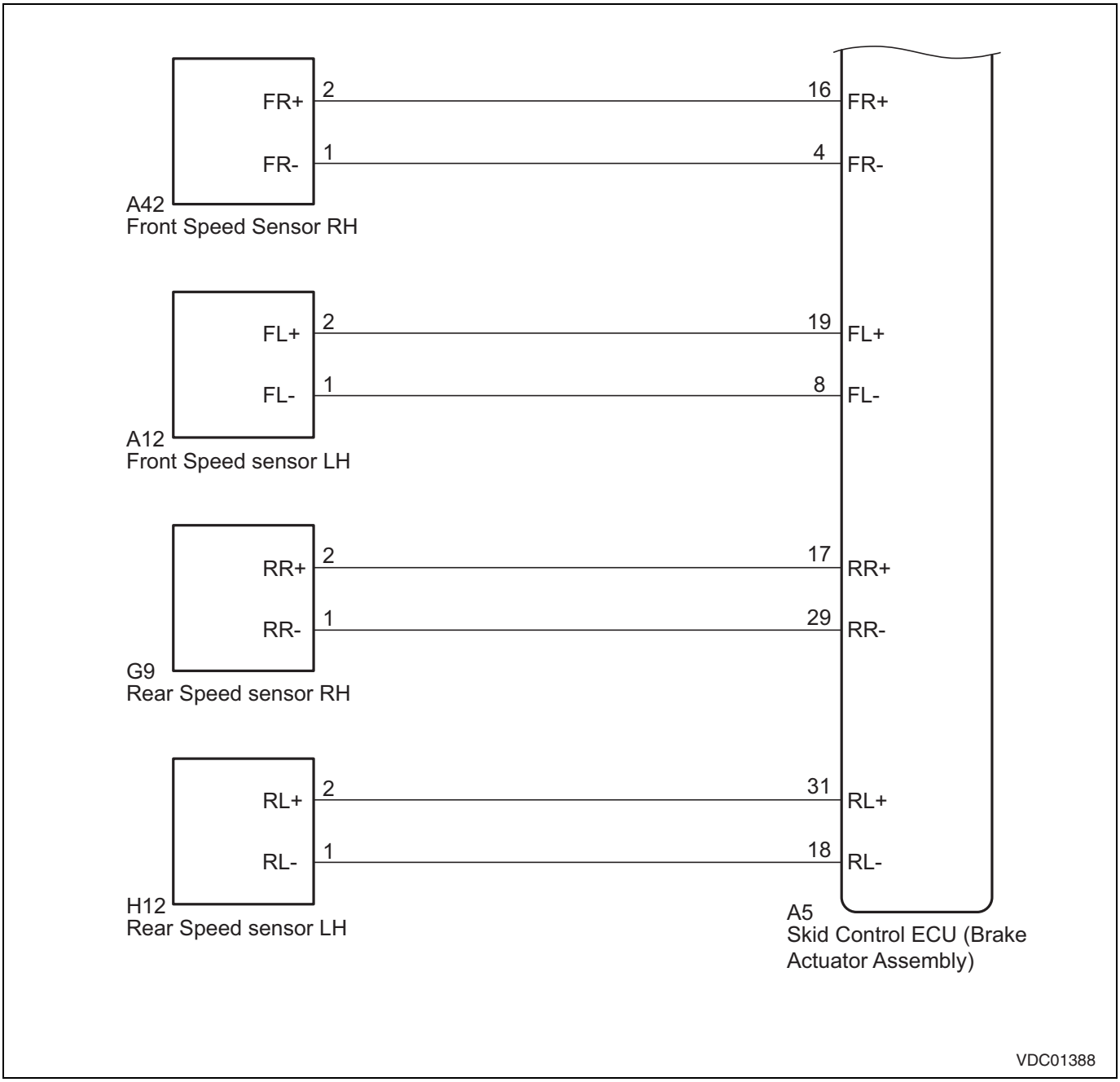

ECM transmission (transmitter)	ECM transmission	Signal	Communication method
Steering sensor	Skid control ECM	Steering sensor signal CAN	CAN communication line
Skid control ECM	ECM	• Wheel speed signal • Vehicle stability control data signal	CAN communication line
ECM	Skid control ECM	• Accelerator opening angle signal • Engine speed signal • Diagnostic signal	CAN communication line
TCM	Skid control ECM	Gear position signal	CAN communication line
Skid control ECM	Power steering ECM ASSY	Vehicle stability control data signal	CAN communication line
Main body ECM	Skid control ECM	Parking brake switch signal	CAN communication line

BC

ECM transmission (transmitter)	ECM transmission	Signal	Communication method
Skid control ECM	Combination meter ASSY	• ABS warning light signal • Brake warning light signal • TRC OFF indicator light signal • Hill start assist ON indicator light signal • Vehicle stability control OFF indicator light signal • TRACK indicator light signal • Slip indicator light signal • Wheel speed signal	CAN communication line

ECM terminal arrangement

1. Skid control computer (brake actuator ASSY) terminal arrangement

*a

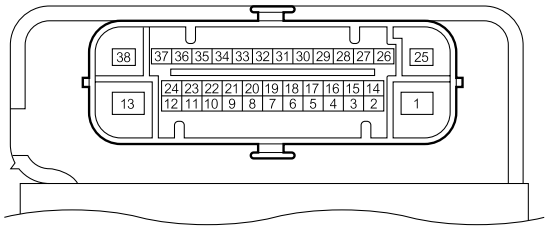

Captions in illustration

*a	Connector not connected (Skid control computer (brake actuator ASSY))	-	-

NOTE:

- The skid control computer is integrated into the brake actuator ASSY and uses water-proof connectors. Therefore, voltage check and oscilloscope waveform checks for each terminal cannot be performed with the computer installed in the vehicle.
- For the operation check and communication check of the skid control computer (brake actuator ASSY), use the data monitor and active test in the SSM4. (Refer to BC - 20)

Skid control computer (brake actuator ASSY) terminal arrangement

Terminal No.	terminal symbol	Terminal name
1	+BM	Motor relay drive power supply
2	SPD	Vehicle speed signal output
4	FR-	Speed sensor FR RH signal input
8	FL-	Speed sensor FR LH signal input
9	CSW2	TRACK switch input
12	CSW1	Vehicle stability control OFF switch input
13	GND2	Actuator pump motor GND
14	CANL	CAN communication input/output
16	FR+	Speed sensor FR RH power supply output
17	RR+	Speed sensor RR RH power supply output
18	RL-	Speed sensor RR LH signal input
19	FL+	Speed sensor FR LH power supply output
25	+BS	Solenoid relay drive power supply
26	CANH	CAN communication input/output
28	IG1	IG power supply (ECM power supply) input
29	RR-	Speed sensor RR RH signal input
30	STP	Stop light switch input
31	RL+	Speed sensor RR LH power supply output
38	GND1	Skid control computer GND

2. Skid control computer (brake actuator ASSY), wiring harness side connector check

*a

A5

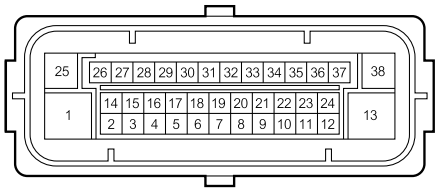

Captions in illustration

*a	Front side of vehicle wiring harness connector (Skid control computer (brake actuator ASSY)- connector)	-	-

(1) Disconnect the connector from the skid control computer (brake actuator ASSY).
(2) Check the voltage and resistance between chassis ground and each terminal of the connector on the wiring harness side of the skid control computer (brake actuator ASSY).

Criteria

Terminal No. (terminal symbol)	Terminal description	Measuring condition	Standard value
A5-1 (+BM) ←→chassis ground	Motor relay drive power supply	Always	11 to 14V
A5-12 (CSW1) ←→chassis ground	Vehicle stability control OFF switch input	Press and hold Vehicle stability control OFF switch.	Less than 1 Ω
		Release Vehicle stability control OFF.	10 k Ωor more
A5-13 (GND2) ←→chassis ground	Actuator pump motor GND	Always	Less than 1 Ω
A5-25 (+BS) ←→chassis ground	Solenoid relay drive power supply	Always	11 to 14V
A5-9 (CSW2) ←→chassis ground	TRACK switch input	Press and hold TRACK switch.	Less than 1 Ω
		Release TRACK switch.	10 kΩ or more
A5-28 (IG1) ←→chassis ground	IG power supply (ECM power supply) input	IG ON	11 to 14V
A5-30 (STP) ←→chassis ground	Stop light switch input	Brake pedal, depressed	8 to 14V
		Brake pedal, released	Less than 1.5 V
A5-38 (GND1) ←→chassis ground	Skid control computer GND	Always	Less than 1 Ω

Data monitor

1. Data monitor list
(1) Turn the ignition switch to OFF and connect the SSM4 to the DLC3.
(2) With IG ON, follow the SSM4 on-screen instructions to check the data monitor.
CAUTION:
Factors including slight margins of error in measurement, differences in measurement environments, and vehicle's time-dependent change may significantly affect the computer data values. Thus it is difficult for the computer data to show reliable standard values (judgment values). Therefore, even if the value is within the standard range, an error may occur.

SSM4 screen: [Brake Control System] →[Data monitor]

BC

Item name	Description/display range	Normal value	Remarks
Wheel speed FR	Indicates the front right wheel speed. Display range: 0.0 to 326.4km/h	When stopping: 0km/h While driving at a stable speed: No large changes.	-
Wheel speed FL	Indicates the front left wheel speed. Display range: 0.0 to 326.4km/h	When stopping: 0km/h While driving at a stable speed: No large changes.	-
Wheel speed RR	Indicates the rear right wheel speed. Display range: 0.0 to 326.4km/h	When stopping: 0km/h While driving at a stable speed: No large changes.	-
Wheel speed RL	Indicates the rear left wheel speed. Display range: 0.0 to 326.4km/h	When stopping: 0km/h While driving at a stable speed: No large changes.	-

Item name	Description/display range	Normal value	Remarks
Lateral G Sensor	Indicates lateral G. Display range: -25.10 to 24.90m/s^2	When turning: Varies in proportion to the generated G.	-
Longitudinal G Sensor	Indicates longitudinal G. Display range: -25.10 to 24.90m/s^2	While accelerating: Varies in proportion to the generated G.	-
Yaw Rate Sensor	Indicates yaw rate. Display range: -128 to 127°/s	When turning: Varies in proportion to the generated yaw.	-
Steering angle sensor	Indicates the steering angle (plus value when steering to left). Display range: -3276.8 to 3276.7°	While steering: Varies in proportion to the steering rotation.	-
IGN Voltage	Indicates the IGN voltage. Display range: 0.0 to 20V	-	-
Motor relay voltage	Indicates the motor relay voltage. Display range: 0.0 to 20 V	-	-
Stop light switch	Indicates the stop light switch operation. Display range: OFF/ON	OFF: Brake pedal, released ON: Brake pedal, depressed	-
ABS Warning Lamp	Indicates the ABS warning light condition. Display range: OFF/ON	OFF: ABS warning light OFF ON: ABS warning light ON	-
EBD Warning Light	Indicates the brake warning light condition. Display range: OFF/ON	OFF: Brake warning light OFF ON: Brake warning light ON	-
Slip Indicator	Indicates the slip indicator light condition. Display range: OFF/ON	OFF: Slip indicator light OFF ON: Slip indicator light ON	-
Solenoid Relay	Indicates the solenoid relay operation. Display range: OFF/ON	OFF: Solenoid not operating ON: Solenoid operating	-
Motor Relay	Indicates the motor relay operation. Display range: OFF/ON	OFF: Motor system, not operating ON: Motor, operating	-
Master cylinder pressure	Indicates values on the master cylinder pressure sensor Display range: -1.00 to 23.99 Mpa	The value is proportional to depressing force: While the pedal is being operated Approx. -1 to 0 MPa: Pedal, released	-
TRC Active	Indicates whether the traction control is operating or not. Display range: Out of Controlling/During control	Out of Control: Traction control is not applied. During control: Traction control is applied.	-
TRC/VSC OFF mode	Indicates the status for TRC/Vehicle stability control OFF mode. Display range: Normal / TRC OFF / VSC OFF	Normal mode: When TRC, Vehicle stability control permitted TRC OFF mode: When TRC prohibited VSC OFF mode: When Vehicle stability control, TRC prohibited	-
FR brake control (VSC)	Indicates whether the front right wheel is controlled by Vehicle stability control or not. Display range: OFF/ON	OFF: Out of Controlling ON: During control	-
FL brake control (VSC)	Indicates whether the front left wheel is controlled by Vehicle stability control or not. Display range: OFF/ON	OFF: Out of Controlling ON: During control	-
RR brake control (VSC)	Indicates whether the rear right wheel is controlled by Vehicle stability control or not. Display range: OFF/ON	OFF: Out of Controlling ON: During control	-
RL brake control (VSC)	Indicates whether the rear left wheel is controlled by Vehicle stability control or not. Display range: OFF/ON	OFF: Out of Controlling ON: During control	-
Throttle shut demand (VSC)	Indicates the demand to close the throttle from the skid control computer (brake actuator ASSY). Display range: OFF/ON	OFF: Throttle closing, not demanded ON: Throttle shut demand	-
Throttle open demand (VSC)	Indicates the demand to open the throttle from the skid control computer (brake actuator ASSY). Display range: OFF/ON	OFF: Throttle open, not demanded ON: Throttle open demand	-
VSC SPORT mode	Indicates the status for Vehicle stability control SPORT mode. Display range: Normal/SPORT mode	Normal: In normal mode SPORT: In Vehicle stability control SPORT mode	-
TRACK mode	Indicates the status for TRACK mode. Display range: Normal mode / TRACK mode	Normal: In normal mode TRACK mode: In TRACK mode	-
Under Control of ABS (FR)	Indicates whether the front right wheel is controlled by ABS or not. Display range: Out of Control/During control	Out of Control: ABS control is not applied. During control: ABS control is applied.	-

Item name	Description/display range	Normal value	Remarks
Under Control of ABS (FL)	Indicates whether the front left wheel is controlled by ABS or not. Display range: Out of Control/During control	Out of Control: ABS control is not applied. During control: ABS control is applied.	-
Under Control of ABS (RR)	Indicates whether the rear right wheel is controlled by ABS or not. Display range: Out of Control/During control	Out of Control: ABS control is not applied. During control: ABS control is applied.	-
Under Control of ABS (RL)	Indicates whether the rear left wheel is controlled by ABS or not. Display range: Out of Control/During control	Out of Control: ABS control is not applied. During control: ABS control is applied.	-
Under Control of EBD (FR)	Indicates the EBD control condition on front right wheel. Display range: Out of Control/During control	Out of Control: EBD control is not applied. During control: EBD control is applied.	-
Under Control of EBD (FL)	Indicates the EBD control condition on front left wheel. Display range: Out of Control/During control	Out of Control: EBD control is not applied. During control: EBD control is applied.	-
Under Control of EBD (RR)	Indicates the EBD control condition on rear right wheel. Display range: Out of Control/During control	Out of Control: EBD control is not applied. During control: EBD control is applied.	-
Under Control of EBD (RL)	Indicates the EBD control condition on rear left wheel. Display range: Out of Control/During control	Out of Control: EBD control is not applied. During control: EBD control is applied.	-

DTC	C1201	EGI error

Description of functions

When an EFI system error is input, this code will be output to illuminate the slip indicator light. (Vehicle stability control system is normal.)

Under the EFI system error, TRC and Vehicle stability controls are prohibited for fail safe.

Diagnostic codes	DTC detecting conditions	Faulty part
C1201	When receiving engine error signal while driving.	Engine control computer

Inspection steps

1	Diagnostic code check (EFI system)

(1) Using SSM4, check the diagnostic code of EFI system. (Refer to ES - 28)

Result

Result	Go to
No output	A
Output exists	B

B → To EFI system (diagnostic code list) (Refer to ES - 12)

A

Replacement of the engine control computer (Refer to ES - 670)

DTC	C1225	VDC switching valve 1 (P)
DTC	C1226	VDC switching valve 1 (S)
DTC	C1227	VDC switching valve 2 (P)
DTC	C1228	VDC switching valve 2 (S)
DTC	C1468	FR solenoid valve system
DTC	C1469	FL solenoid valve system
DTC	C146A	RR solenoid valve system
DTC	C146B	RL solenoid valve system

Description of functions

Each solenoid adjusts the pressure applied to each wheel cylinder to control the vehicle.

While an abnormal diagnostic code is being output, the fail safe function turns OFF the solenoid relay forcibly. Therefore the solenoid will not be turned ON.

The solenoid relay and the solenoid are integrated into the brake actuator ASSY.

Diagnostic codes	DTC detecting conditions	Faulty part
C1225 C1226 C1227 C1228 C1468 C1469 C146A C146B	When the solenoid signal does not match the check result	Brake actuator ASSY (Internal error)

NOTE:

Diagnostic codes	Relevant solenoid
C1225	[Normal Opening Valve 1 malfunction]
C1226	[Normal Opening Valve 2 malfunction]
C1227	[Normal Closing Valve 1 malfunction]
C1228	[Normal Closing Valve 2 malfunction]
C1468	[FR Valve]
C1469	[FL Valve]
C146A	[RR Valve]
C146B	[RL Valve]

BC

Inspection steps

CAUTION:

When the skid control computer (brake actuator ASSY) has been replaced, make sure to perform [VSC(VDC) Centering Mode]. (Refer to BC - 15)

1	Diagnostic code output check

(1) Using SSM4, clear the diagnostic code. (Refer to BC - 13)

(2) Perform a driving test.

(3) Using SSM4, check the diagnostic code output. (Refer to BC - 13)

Result

Result	Go to
Normal	A
Error code	B

B → Replacement of skid control computer (brake actuator ASSY) (Refer to BC - 93)

A

Malfunction reproduction test (Refer to IN - 32)

DTC	C1231	Steering angle sensor malfunction

Description of functions

The skid control computer (brake actuator ASSY) inputs the steering sensor signal through CAN communication.

If there is a trouble in the communication line connected to the steering sensor, the diagnostic code "U0126(Nonarrival of H-CAN data(Steering angle sensor))" is output.

Diagnostic codes	DTC detecting conditions	Faulty part
C1231	When the voltage at +BS terminal is between 9.6 to 16.5 V, a steering sensor error signal is received.	• ECM IG1 fuse • Wiring harness or connector • Steering sensor

Circuit figure

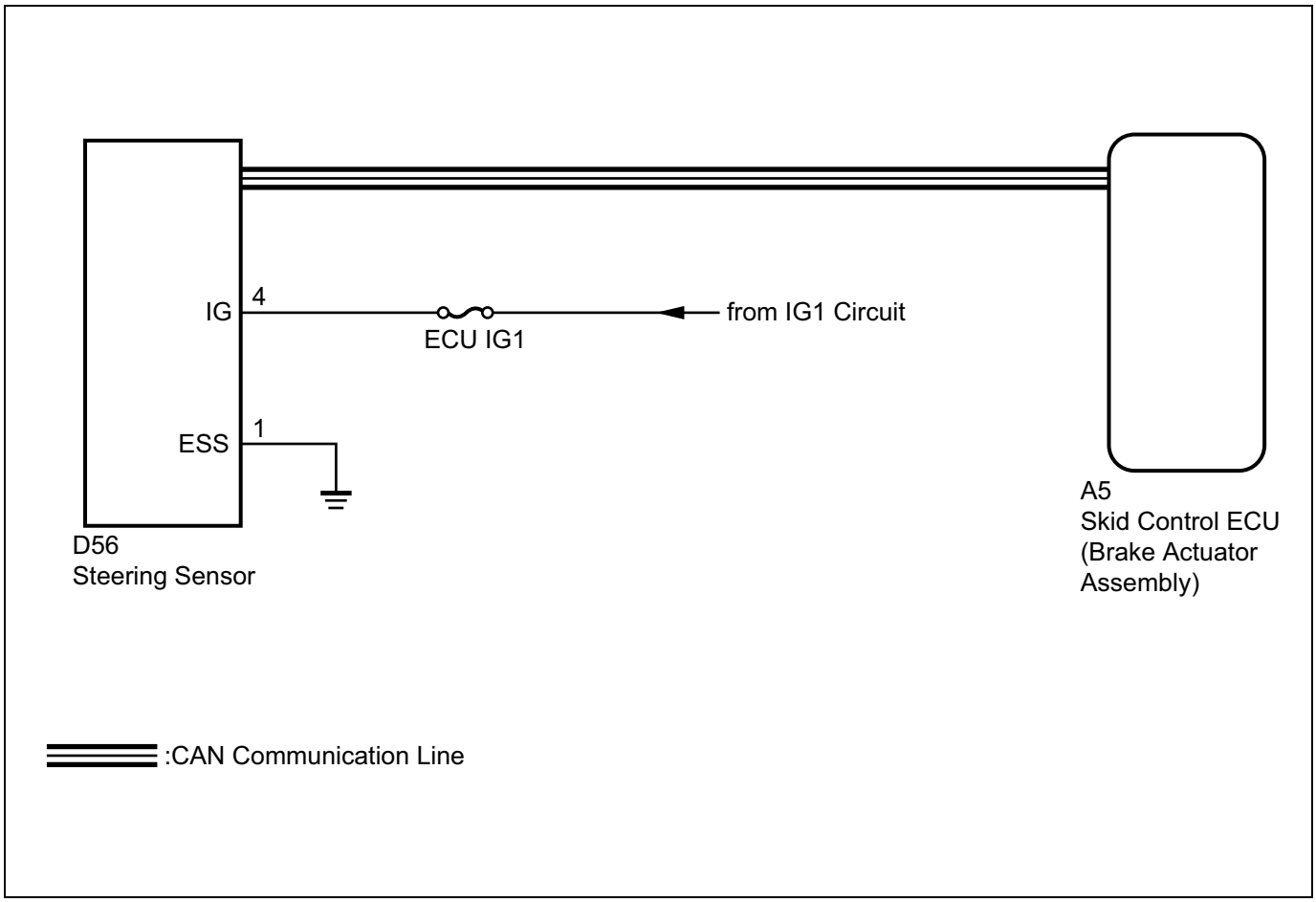

Inspection steps

CAUTION:

- When the steering sensor has been replaced, make sure to perform [VSC(VDC) Centering Mode]. (Refer to BC - 15)
- Before performing troubleshooting, check the fuse for this circuit.

1	Check the diagnosis codes

(1) Clear the diagnostic code. (Refer to BC - 13)
(2) Turn the ignition switch to OFF.
(3) Turn IG ON again and check that no diagnostic code for CAN communication error is output. (Refer to BC - 13)
(4) Driving at 35 km/h or more and operating the steering wheel, make sure that no diagnostic code for speed sensor error and yaw rate sensor error is output. (Refer to BC - 13)

Result

Result	Go to
None of CAN communication error code, speed sensor error code, or yaw rate sensor error code is output.	A
CAN communication error code is output.	B
Speed sensor error code or yaw rate sensor error code is output	C

NOTE:
- When there is a trouble in the speed sensor or the yaw rate sensor, even if the steering sensor is normal, abnormal value may be issued.
- If both speed sensor error code and yaw rate sensor error code are output at the same time, repair them and then check the steering sensor.

B → Go to "CAN communication system (How to troubleshoot)" (Refer to NW - 30)

C → Progress to the appropriate diagnosis code (Refer to BC - 6)

A

2	Check wiring harness and connector (steering sensor power supply)

(1) Check the steering sensor connector for poor engagement or disconnection.
Criteria: No trouble
(2) Disconnect the connector D56 for the steering sensor.
(3) Check the case and terminal of the connector for deformation and/or corrosion.
Criteria: No deformation or corrosion.

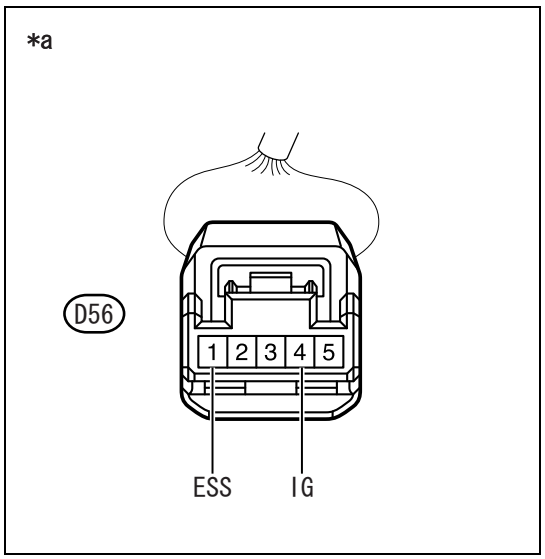

(4) Check the voltage and resistance between terminals.
Voltage

Inspection terminals	Inspection conditions	Standard value
D56-4(IG) - chassis ground	IG ON	11 to 14V

Resistance

Inspection terminals	Inspection conditions	Standard value
D56-1(ESS) - chassis ground	Always	Less than 1 Ω

Captions in illustration

*a	Front side of vehicle wiring harness connector (Steering sensor connector)

NG → Repair or replacement of wiring harness or connector

BC

OK

Replacement of steering sensor (Refer to BC - 108)

DTC	C1234	Yaw rate sensor error

DTC	C1419	G sensor error

DTC	C1472	Lateral G sensor error

DTC	C1474	Longitudinal G sensor error

Description of functions

If there is a malfunction in the yaw rate sensor which is integrated into the skid control computer (brake actuator ASSY), the skid control computer (brake actuator ASSY) outputs a diagnostic code and prohibits the Vehicle stability control operation for fail safe.

Diagnostic codes	DTC detecting conditions	Faulty part
C1234	Skid control computer (brake actuator ASSY) internal error (yaw rate sensor)	Skid control computer (brake actuator ASSY)
C1419	Skid control computer (brake actuator ASSY) internal error (G sensor)	
C1472	Skid control computer (brake actuator ASSY) internal error (lateral G sensor)	
C1474	Skid control computer (brake actuator ASSY) internal error (longitudinal G sensor)	

Inspection steps

CAUTION:

When the brake actuator ECM has been replaced, make sure to perform [VSC(VDC) Centering Mode]. (Refer to BC - 15)

1	Skid control computer (brake actuator ASSY) installation condition check

(1) Check the installation condition of the skid control computer (brake actuator ASSY). (Refer to BC - 98)

NG → Install it correctly (Refer to BC - 98)

OK

2	Replacement of the brake actuator ECM

(1) Replace the brake actuator ECM only. (Refer to BC - 93)

Next

Complete

DTC	C1237	System error

Description of functions

Diagnostic codes	DTC detecting conditions	Faulty part
C1237	• Outputs from the speed sensors at 4 wheels are all different. • Speed sensor signal pulse error for 3 wheels or more. • ABS control continues for long time • Vehicle stability control continues for a long time	• Tire size error • Speed sensor • Speed sensor rotor • Wiring harness or connector • Skid control computer (brake actuator ASSY)

Circuit figure

For circuit figure, refer to BC - 48and BC - 53

Inspection steps

CAUTION:

When the brake actuator ECM has been replaced, make sure to perform [VSC(VDC) Centering Mode]. (Refer to BC - 15)

1	Tire size check

(1) Check the 4 wheel tire size.

Criteria: Specified size

NG → Replace with the tire of specified size.

OK

2	Data monitor check (wheel speed)

(1) Using SSM4, check [Data monitor] of [Wheel speed] while driving straight at a speed of 10 km/h or more. (Refer to BC - 20)

SSM4 screen: [Brake Control System] →[Data monitor]

Item name	Description/display range	Normal value	Remarks
[Wheel Speed FR]	Indicates the front right wheel speed. Display range: 0 to 326.4km/h	When stopping: 0km/h While driving at a stable speed: No large changes.	-
[Wheel Speed FL]	Indicates the front left wheel speed. Display range: 0 to 326.4km/h	When stopping: 0km/h While driving at a stable speed: No large changes.	-
[Wheel Speed RR]	Indicates the rear right wheel speed. Display range: 0 to 326.4km/h	When stopping: 0km/h While driving at a stable speed: No large changes.	-
[Wheel Speed RL]	Indicates the rear left wheel speed. Display range: 0 to 326.4km/h	When stopping: 0km/h While driving at a stable speed: No large changes.	-

Criteria: There is no big difference from the speed meter.

Result

Result	Go to
OK	A
NG (front side)	B
NG (rear side)	C

BC

B → Go to Step 4.

C → Go to Step 12.

A

3	Diagnostic code list recheck

(1) Using SSM4, clear the diagnostic code. (Refer to BC - 13)
(2) Perform a driving test.
(3) Using SSM4 again, check the diagnostic code output. (Refer to BC - 13)

Result

Result	Go to
Normal	A
Error code (front side)	B
Error code (rear side)	C

B → Go to Step 4.

C → Go to Step 12.

A

Malfunction reproduction test (Refer to IN - 32)

4	Speed sensor installation condition check

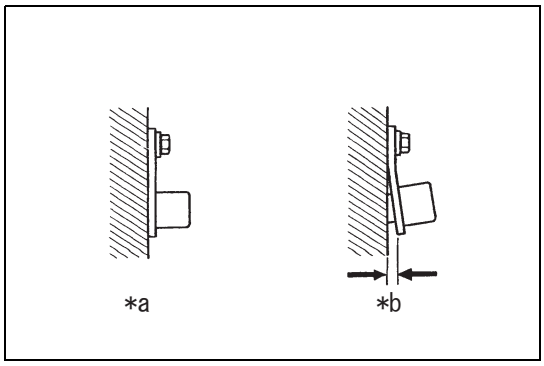

(1) Check installation condition of the speed sensor.
Criteria: Properly installed.

Captions in illustration

*a	Normal
*b	Malfunction

NG → Properly install the speed sensor or replace it.

OK

5	Speed sensor check

(1) Remove the speed sensor from the relevant wheel and check it for foreign matter adhesion or damage at the tip. (Refer to BC - 101)
Criteria: There is no foreign particles or damage.
CAUTION:
If there is no damage in the speed sensor through this check, do not replace the speed sensor.

NG → Clean or replace the speed sensor.

BC

OK

6	Check wiring harness and connector (speed sensor brake actuator ASSY)

(1) Check the connector of the skid control computer (brake actuator ASSY) for a trouble such as poor engagement or disconnection.
Criteria: No trouble
(2) Turn IG OFF and disconnect the connector A5 from the skid control computer (brake actuator ASSY).
(3) Disconnect the connector, A12 or A42 of the front speed sensor.
(4) Check the case and terminal of the connector for deformation and/or corrosion.
Criteria: No deformation or corrosion.
(5) Measure the resistance between the terminals.

Resistance

RH

Inspection terminals	Inspection conditions	Standard value
A5-16(FR+) - A42-2(FR+)	Always	Less than 1 Ω
A5-16(FR+) - chassis ground	Always	10 k Ωor more
A5-4(FR-) - A42-1(FR-)	Always	Less than 1 Ω
A5-4(FR-) - chassis ground	Always	10 k Ωor more

LH

Inspection terminals	Inspection conditions	Standard value
A5-19(FL+) - A12-2(FL+)	Always	Less than 1 Ω
A5-19(FL+) - chassis ground	Always	10 k Ωor more
A5-8(FL-) - A12-1(FL-)	Always	Less than 1 Ω
A5-8(FL-) - chassis ground	Always	10 k Ωor more

NG → Repair or replacement of wiring harness or connector

OK

7	Diagnostic code list recheck

(1) Using SSM4, clear the diagnostic code. (Refer to BC - 13)
(2) Perform a driving test.
(3) Using SSM4 again, check the diagnostic code output. (Refer to BC - 13)

Result

Result	Go to
Error code	A
Normal	B

B → Malfunction reproduction test (Refer to IN - 32)

A

BC

8	Replacement of front speed sensor

(1) Replace the relevant front speed sensor with error code. (Refer to BC - 101)

Next

9	Diagnostic code list recheck

(1) Using SSM4, clear the diagnostic code. (Refer to BC - 13)
(2) Perform a driving test.
(3) Using SSM4 again, check the diagnostic code output. (Refer to BC - 13)

Result

Result	Go to
Error code	A
Normal	B

B → Completed

A

10	Replacement of speed sensor rotor

(1) Replace the relevant speed sensor rotor with error code. (Refer to AD - 6)
NOTE:
The speed sensor rotor is assembled in the front axle hub. Therefore, replace the front axle hub.

Next

11	Diagnostic code list recheck

(1) Using SSM4, clear the diagnostic code. (Refer to BC - 13)
(2) Perform a driving test.
(3) Using SSM4 again, check the diagnostic code output. (Refer to BC - 13)

Result

Result	Go to
Normal	A
Error code	B

B → Replacement of skid control computer (brake actuator ASSY) (Refer to BC - 93)

A

Completed

12	Speed sensor installation condition check

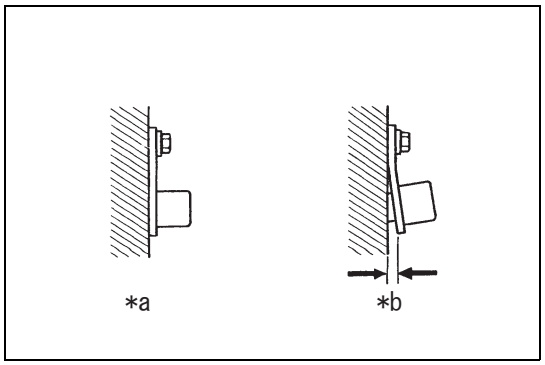

(1) Check installation condition of the speed sensor.
Criteria: Properly installed.

Captions in illustration

*a	Normal
*b	Malfunction

NG → Properly install the speed sensor or replace it.

OK

13	Speed sensor check

(1) Remove the speed sensor from the relevant wheel and check it for foreign matter adhesion or damage at the tip. (Refer to BC - 104)
Criteria: There is no foreign particles or damage.
CAUTION:
If there is no damage in the speed sensor through this check, do not replace the speed sensor.

NG → Clean or replace the speed sensor.

OK

14	Check wiring harness and connector (speed sensor brake actuator ASSY)

(1) Check the connector of the skid control computer (brake actuator ASSY) for a trouble such as poor engagement or disconnection.
Criteria: No trouble
(2) Turn IG OFF and disconnect the connector A5 from the skid control computer (brake actuator ASSY).
(3) Disconnect the connector, G9 or H12 for the rear speed sensor.
(4) Check the case and terminal of the connector for deformation and/or corrosion.
Criteria: No deformation or corrosion.
(5) Measure the resistance between the terminals.

Resistance

RH

Inspection terminals	Inspection conditions	Standard value
A5-17(RR+) - G9-2(RR+)	Always	Less than 1 Ω
A5-17(RR+) - chassis ground	Always	10 k Ωor more
A5-29(RR-) - G9-1(RR-)	Always	Less than 1 Ω
A5-29(RR-) - chassis ground	Always	10 k Ωor more

LH

Inspection terminals	Inspection conditions	Standard value
A5-31(RL+) - H12-2(RL+)	Always	Less than 1 Ω

Inspection terminals	Inspection conditions	Standard value
A5-31(RL+) - chassis ground	Always	10 k Ωor more
A5-18(RL-) - H12-1(RL-)	Always	Less than 1 Ω
A5-18(RL-) - chassis ground	Always	10 k Ωor more

NG → Repair or replacement of wiring harness or connector

OK

15 Diagnostic code list recheck

(1) Using SSM4, clear the diagnostic code. (Refer to BC - 13)
(2) Perform a driving test.
(3) Using SSM4 again, check the diagnostic code output. (Refer to BC - 13)

Result

Result	Go to
Error code	A
Normal	B

B → Malfunction reproduction test (Refer to IN - 32)

A

16 Replacement of rear speed sensor

(1) Replace the relevant rear speed sensor with error code. (Refer to BC - 104)

Next

17 Diagnostic code list recheck

(1) Using SSM4, clear the diagnostic code. (Refer to BC - 13)
(2) Perform a driving test.
(3) Using SSM4 again, check the diagnostic code output. (Refer to BC - 13)

Result

Result	Go to
Error code	A
Normal	B

B → Completed

A

18 Replacement of speed sensor rotor

(1) Replace the relevant speed sensor rotor with error code. (Refer to AD - 15)

NOTE:
The speed sensor rotor is assembled in the rear axle hub. Therefore, replace the rear axle hub.

Next

19	Diagnostic code list recheck

(1) Using SSM4, clear the diagnostic code. (Refer to BC - 13)
(2) Perform a driving test.
(3) Using SSM4 again, check the diagnostic code output. (Refer to BC - 13)

Result

Result	Go to
Normal	A
Error code	B

B → Replacement of brake actuator ECM only (Refer to BC - 93)

A

Completed

DTC	C1241	Power supply voltage error

Description of functions
If there is a malfunction in the power supply circuit, the skid control computer (brake actuator ASSY) outputs a diagnostic code and prohibits the operation by fail safe function.
If the voltage to the +BS terminal is not within the range of DTC detecting conditions due to a malfunctioning power supply or charging circuit (including battery and alternator circuits), this code will be stored in memory.
When the voltage to the +BS terminal returns to normal, this diagnostic code will be cleared.

Diagnostic codes	DTC detecting conditions	Faulty part
C1241	• The voltage applied to the +BS terminal continues 9.6V or less for 1 second or more, at the vehicle speed of 6 km/h or more. • The voltage applied to the +BS terminal continues 6.9 V or less for 1 second or more, at the vehicle speed of 6 km/h or more. • When the voltage of the +BS terminal is 9.6 V or more at the vehicle speed of 15 km/h or more and the skid control computer (brake actuator ASSY) starts the solenoid, the voltage of the solenoid relay has dropped significantly.	• ABS No.2 fuse • ECM IG1 fuse • Battery • Charging system • Wiring harness or connector • Skid control computer (brake actuator ASSY)

Circuit figure

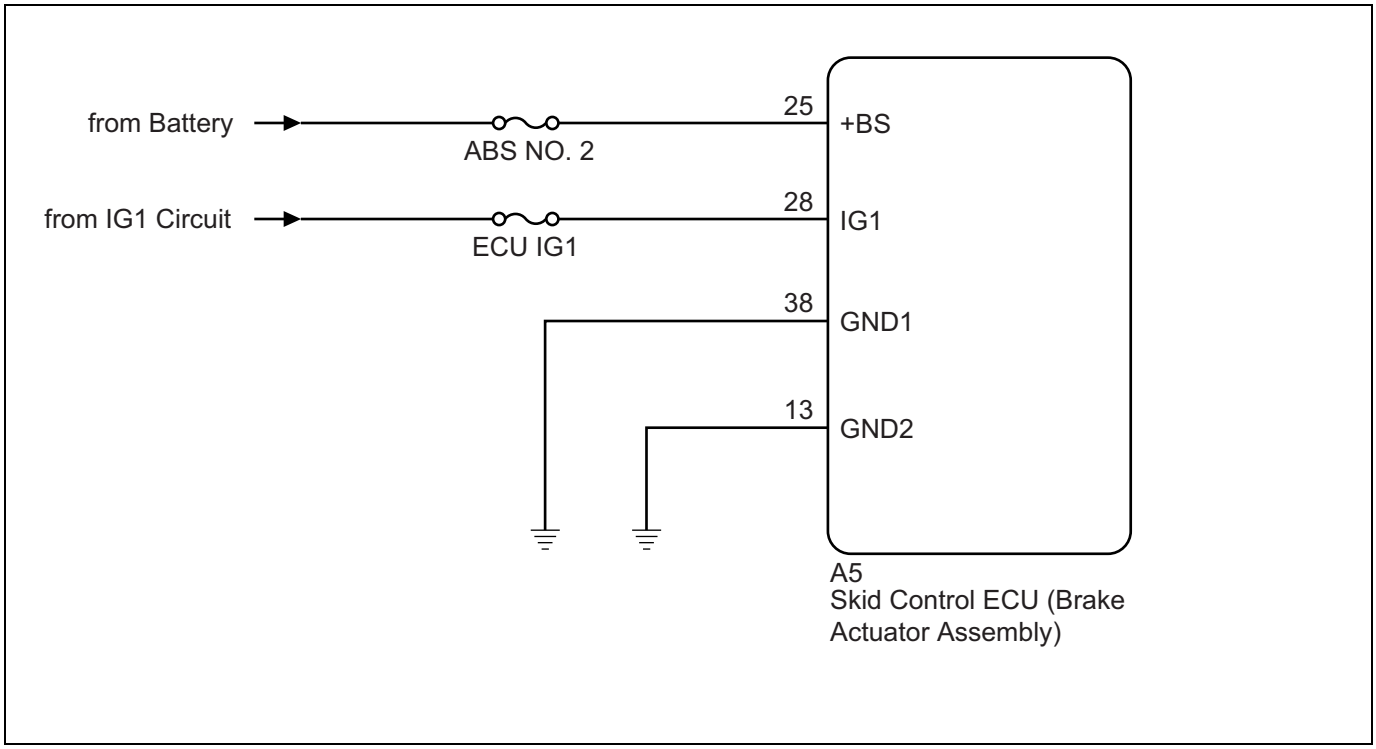

Inspection steps

CAUTION:

- When the brake actuator ECM has been replaced, make sure to perform [VSC(VDC) Centering Mode]. (Refer to BC - 15)
- Before performing troubleshooting, check the fuse for this circuit.

1	Battery check

(1) Check the battery voltage.
Voltage: 11 to 14V

NG → Check or replacement of battery or charging system (Refer to BH - 6)

OK

2	Check wiring harness and connector (+BS, IG1, GND1, GND2 terminals)

(1) Check the connector of the skid control computer (brake actuator ASSY) for a trouble such as poor engagement or disconnection.
Criteria: No trouble

(2) Turn IG OFF and disconnect the connector A5 from the skid control computer (brake actuator ASSY).

(3) Check the case and terminal of the connector for deformation and/or corrosion.
Criteria: No deformation or corrosion.

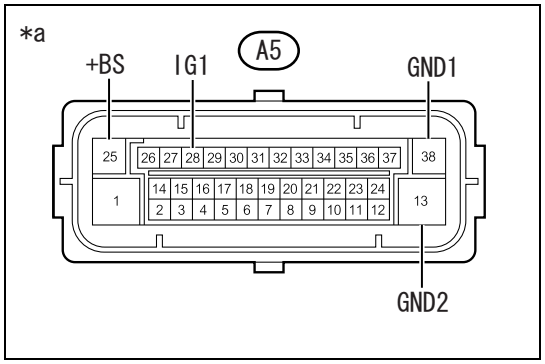

(4) Check the voltage and resistance between terminals.
Voltage

Inspection terminals	Inspection conditions	Standard value
A5-25(+BS) - chassis ground	Always	11 to 14V
A5-28(IG1) - chassis ground	IG ON	11 to 14V

Resistance

Inspection terminals	Inspection conditions	Standard value
A5-38(GND1) - chassis ground	Always	Less than 1 Ω
A5-13(GND2) - chassis ground	Always	Less than 1 Ω

Captions in illustration

*a	Front side of vehicle wiring harness connector (Skid control computer (brake actuator ASSY)- connector)

NOTE:
If there is a malfunction in GND1 and GND2 terminals, check the ground point for looseness.

NG → Repair or replacement of wiring harness or connector

OK ↓

3	Diagnostic code list recheck

(1) Using SSM4, clear the diagnostic code. (Refer to BC - 13)
(2) Perform a driving test.
(3) Using SSM4 again, check the diagnostic code output. (Refer to BC - 13)

Result

Result	Go to
Normal	A
Error code	B

B → Replacement of brake actuator ECM only (Refer to BC - 93)

A ↓

Malfunction reproduction test (Refer to IN - 32)

DTC	C1246	Pressure sensor system

Description of functions
The master cylinder pressure sensor is integrated into the brake actuator ASSY and connected to the skid control computer.

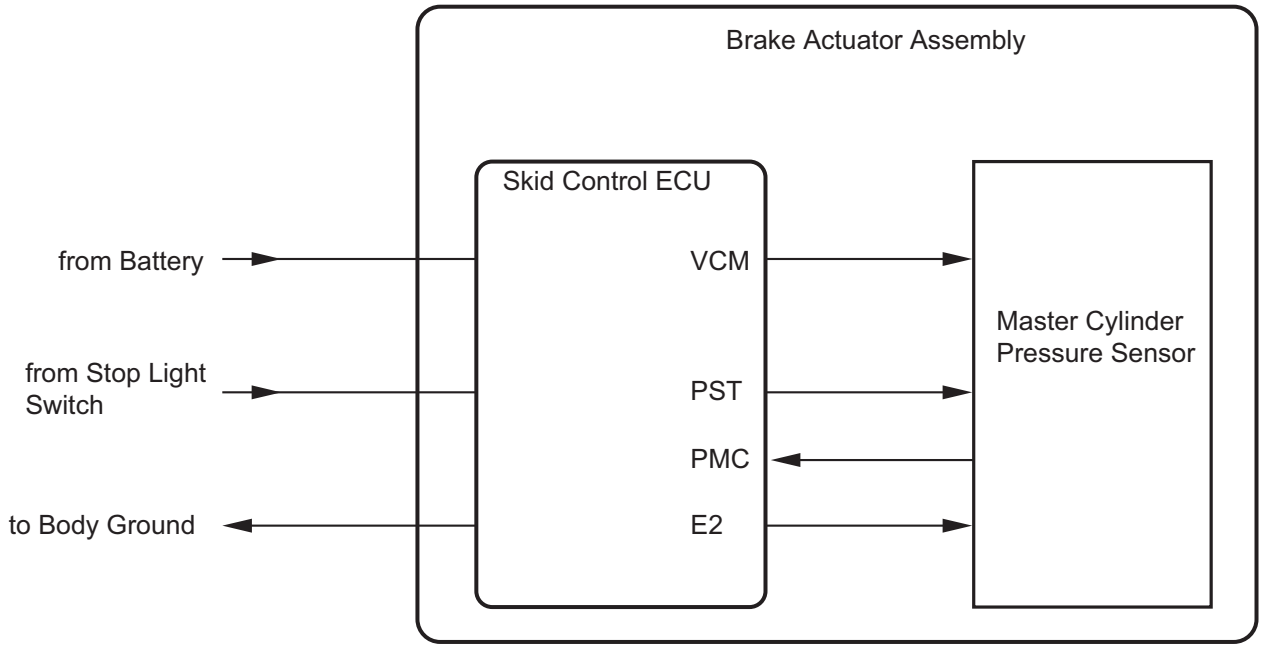

VCM: Power Supply for Master Cylinder Pressure Sensor

PMC: Master Cylinder Pressure Sensor Input

E2: Master Cylinder Pressure Sensor Ground

PST: Master Cylinder Pressure Sensor Test Signal

N

Diagnostic codes	DTC detecting conditions	Faulty part
C1246	• Voltage of the sensor signal is outside the specified range. • The offset value of the sensor signal is outside the specified range.	• STOP fuse • Stop light switch circuit • Wiring harness and connector • Brake actuator ASSY (master cylinder pressure sensor circuit) • Skid control computer (brake actuator ASSY)

Circuit figure

For a circuit figure, refer to BC - 41.

Inspection steps

CAUTION:

- When the skid control computer (brake actuator ASSY) has been replaced, make sure to perform [VSC(VDC) Centering Mode]. (Refer to BC - 15)
- Before performing troubleshooting, check the fuse for this circuit.

BC

1	Stop light illumination check

(1) Turn IG ON and depress the brake pedal to check that the stop light illuminates.
Criteria: The stop light illuminates.

NG → Stop light circuit check (Refer to LE - 7)

OK ↓

2	Data monitor check (master cylinder pressure)

(1) Using SSM4, check [Data monitor] of [Master cylinder pressure]. (Refer to BC - 20)

SSM4 screen: [Brake Control System] →[Data monitor]

Item name	Description/display range	Normal value	Remarks
[Master cylinder pressure]	Indicates the output value on the master pressure sensor. Display range: -1 to 23.99MPa	While the brake pedal is being operated: Varies in proportion to the depressing force. When the brake pedal is not operated: -1 to 0.5 MPa	-

Criteria: Output value varies in proportion to the brake pedal depressing force.

NG → Replacement of skid control computer (brake actuator ASSY) (Refer to BC - 93)

OK ↓

3	Data monitor check (stop light switch)

(1) Using SSM4, check [Data monitor] of [Stop Lamp Switch]. (Refer to BC - 20)

SSM4 screen: [Brake Control System] →[Data monitor]

Item name	Description/display range	Normal value	Remarks
[Stop Lamp Switch]	Indicates the stop light switch operation. Display range: OFF/ON	OFF: Brake pedal, released ON: Brake pedal, depressed	-

Criteria: According to the brake pedal operation, the display switches ON/OFF.

NG → Go to Step 5.

OK ↓

4	Diagnostic code list recheck

(1) Using SSM4, clear the diagnostic code. (Refer to BC - 13)
(2) Perform a driving test.
(3) Using SSM4 again, check the diagnostic code output. (Refer to BC - 13)

Result

Result	Go to
Normal	A
Error code	B

B → Replacement of skid control computer (brake actuator ASSY) (Refer to BC - 93)

A

Malfunction reproduction test (Refer to IN - 32)

5 Check wiring harness and connector (noise filter - battery)

(1) Disconnect the connector, A13 of the noise filter.

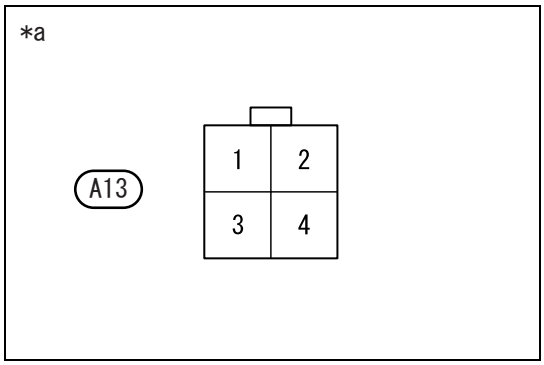

(2) Measure the voltage between the terminals.
Voltage

Inspection terminals	Inspection conditions	Standard value
A13-3 - chassis ground	Always	11 to 14V

Captions in illustration

*a	Front side of vehicle wiring harness connector (Noise filter connector)

NG → Repair or replacement of wiring harness or connector

OK

6 Noise filter check

(1) Check the noise filter. (Refer to AV - 40)

NG → Repair or replacement of noise filter (Refer to AV - 39)

OK

7 Check wiring harness and connector (noise filter - stop light switch ASSY)

(1) Disconnect the connector, A22 for the stop light switch ASSY.
(2) Measure the resistance between the terminals.
Resistance

Inspection terminals	Inspection conditions	Standard value
A13-2 - A22-1	Always	Less than 1 Ω
A13-1 - A22-2	Always	Less than 1 Ω

NG → Repair or replacement of wiring harness or connector

OK

BC

8	Stop light switch ASSY check

(1) Check the stop light switch ASSY. (Refer to LE - 80)

NG → Repair or replacement of stop light switch ASSY (Refer to LE - 78)

OK

9	Check wiring harness and connector (STP terminal)

(1) Check the connector of the skid control computer (brake actuator ASSY) for a trouble such as poor engagement or disconnection.
Criteria: No trouble

(2) Turn IG OFF and disconnect the connector A5 from the skid control computer (brake actuator ASSY).

(3) Check the case and terminal of the connector for deformation and/or corrosion.
Criteria: No deformation or corrosion.

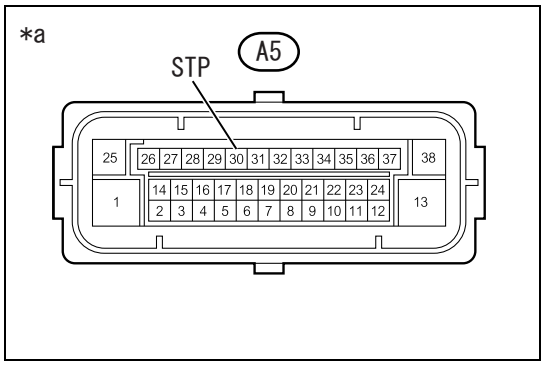

(4) Measure the voltage between the terminals.
Voltage

Inspection terminals	Inspection conditions	Standard value
A5-30(STP) - chassis ground	Brake pedal, depressed	11 to 14V
A5-30(STP) - chassis ground	Brake pedal, released	Less than 1.5 V

Captions in illustration

*a	Front side of vehicle wiring harness connector (Skid control computer (brake actuator ASSY)- connector)

NG → Repair or replacement of wiring harness or connector

OK

Replacement of skid control computer (brake actuator ASSY) (Refer to BC - 93)

DTC	C1249	BLS malfunction

BC

Description of functions

The skid control computer (brake actuator ASSY) inputs the stop light switch signal to input the brake operation conditions.
When the skid control computer (brake actuator ASSY) judges one of the followings, this diagnostic code will be stored in memory.

- Stop light switch ON/OFF, stuck
- Accelerator pedal and brake pedal, depressed simultaneously (*)

NOTE:

*: If the accelerator pedal and the brake pedal are depressed simultaneously, the skid control computer (brake actuator ASSY) judges that the stop light switch is stuck to ON and the diagnostic code may be stored in memory. However, this is not a malfunction.

Diagnostic codes	DTC detecting conditions	Faulty part
C1249	• The accelerator pedal has been ON and the brake has been ON for 60 seconds at the vehicle speed of 10 km/h or more. • When the pressure inside the master cylinder increases with the stop light switch OFF.	• STOP fuse • Stop light switch ASSY • Noise filter • Wiring harness and connector • Skid control computer (brake actuator ASSY)

Circuit figure

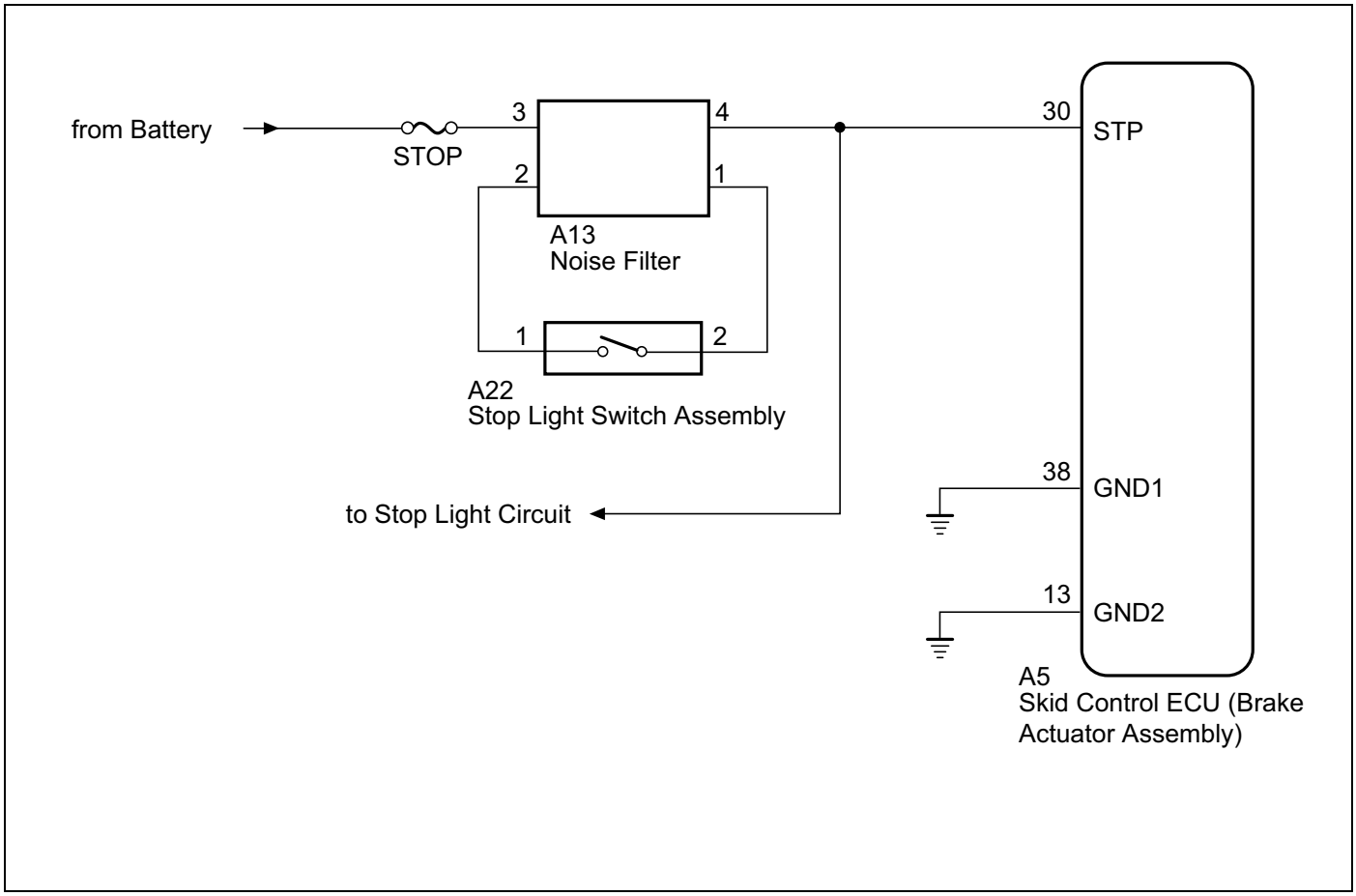

Inspection steps

CAUTION:

- When the brake actuator ECM has been replaced, make sure to perform [VSC(VDC) Centering Mode]. (Refer to BC - 15)
- Before performing troubleshooting, check the fuse for this circuit.

1	Interview

(1) Interview the customer if the accelerator pedal and the brake pedal have been depressed simultaneously while driving and braking.

Criteria: The acceleration pedal and the brake pedal were not depressed simultaneously.

NOTE:

- If the accelerator pedal and the brake pedal are depressed simultaneously, the skid control computer (brake actuator ASSY) judges that the stop light switch is stuck to ON and the diagnostic code may be stored in memory.
- If the accelerator pedal and the brake pedal have been depressed simultaneously, it is not a malfunction. Clear the diagnostic code.

BC

(Refer to BC - 13)

NG → Complete

OK

2	Stop light illumination check

(1) Check the stop light illumination status when the brake pedal is depressed.

Criteria

Inspection conditions	Illumination status
Brake pedal, depressed	Light ON
Brake pedal, released	Light OFF

NG → Go to Step 5.

OK

3	Data monitor check (stop light switch)

(1) Using SSM4, check [Data monitor] of [Stop Lamp Switch]. (Refer to BC - 13)

SSM4 screen: [Brake Control System] →[Data monitor]

Item name	Description/display range	Normal value	Remarks
[Stop Lamp Switch]	Indicates the stop light switch operation. Display range: OFF/ON	OFF: Brake pedal, released ON: Brake pedal, depressed	-

Criteria: According to the brake pedal operation, the display switches ON/OFF.

NG → Go to Step 11.

OK

4	Diagnostic code list recheck

(1) Drive at the speed of 10 km/h or more and stop the vehicle by depressing the brake pedal.

(2) Use the SSM4 to check the diagnosis codes. (Refer to BC - 13)

Result

Result	Go to
No output	A
Output exists	B

B → Replacement of skid control computer (brake actuator ASSY) (Refer to BC - 93)

A

Malfunction reproduction test (Refer to IN - 32)

BC

5	Check wiring harness and connector (noise filter - battery)

(1) Disconnect the noise filter connector (A13).

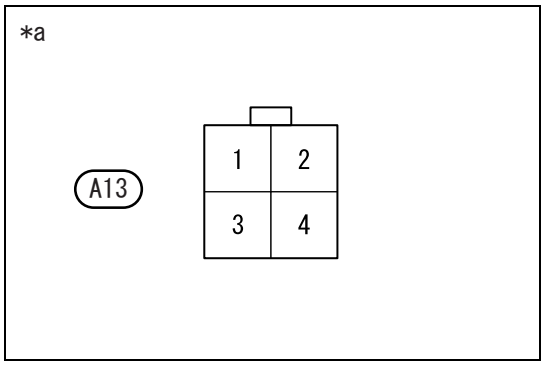

(2) Measure the voltage between the terminals.
Voltage

Inspection terminals	Inspection conditions	Standard value
A13-3 - chassis ground	Always	11 to 14V

Captions in illustration

*a	Front side of vehicle wiring harness connector (Noise filter connector)

NG → Repair or replacement of wiring harness or connector

OK

6	Noise filter check

(1) Check the noise filter. (Refer to AV - 40)

NG → Repair or replacement of noise filter (Refer to AV - 39)

OK

7	Check wiring harness and connector (noise filter - stop light switch ASSY)

(1) Disconnect the connector, A22 for the stop light switch ASSY.
(2) Measure the resistance between the terminals.
Resistance

Inspection terminals	Inspection conditions	Standard value
A13-2 - A22-1	Always	Less than 1 Ω
A13-1 - A22-2	Always	Less than 1 Ω

NG → Repair or replacement of wiring harness or connector

OK

8	Stop light switch ASSY check

(1) Check the stop light switch ASSY. (Refer to LE - 80)

NG → Repair or replacement of stop light switch ASSY (Refer to LE - 78)

OK

9	Check wiring harness and connector (STP terminal)

(1) Check the connector of the skid control computer (brake actuator ASSY) for a trouble such as poor engagement or disconnection.
Criteria: No trouble

BC

(2) Turn IG OFF and disconnect the connector A5 from the skid control computer (brake actuator ASSY).
(3) Check the case and terminal of the connector for deformation and/or corrosion.
Criteria: No deformation or corrosion.

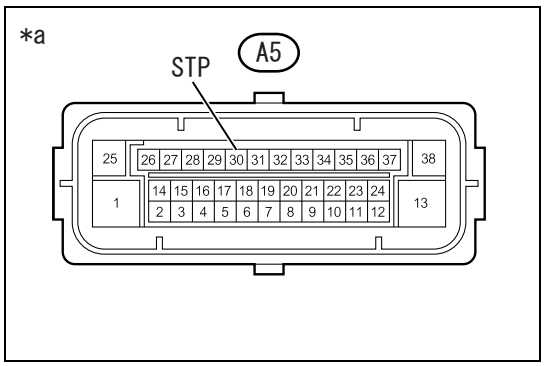

(4) Measure the voltage between the terminals.
Voltage

Inspection terminals	Inspection conditions	Standard value
A5-30(STP) - chassis ground	Brake pedal, depressed	11 to 14V
A5-30(STP) - chassis ground	Brake pedal, released	Less than 1.5 V

Captions in illustration

*a	Front side of vehicle wiring harness connector (Skid control computer (brake actuator ASSY)- connector)

NG → Repair or replacement of wiring harness or connector

OK

10	Diagnostic code list recheck

(1) Drive at the speed of 10 km/h or more and stop the vehicle by depressing the brake pedal.
(2) Use the SSM4 to check the diagnosis codes. (Refer to BC - 13)
Result

Result	Go to
No output	A
Output exists	B

B → Malfunction reproduction test (Refer to IN - 32)

A

To lighting system (How to troubleshoot) (Refer to LE - 10)

11	Check wiring harness and connector (STP terminal)

BC

(1) Check the connector of the skid control computer (brake actuator ASSY) for a trouble such as poor engagement or disconnection.
Criteria: No trouble
(2) Turn IG OFF and disconnect the connector A5 from the skid control computer (brake actuator ASSY).
(3) Check the case and terminal of the connector for deformation and/or corrosion.
Criteria: No deformation or corrosion.

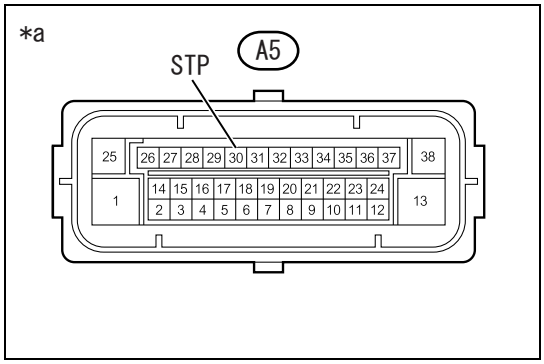

(4) Measure the voltage between the terminals.
Voltage

Inspection terminals	Inspection conditions	Standard value
A5-30(STP) - chassis ground	Brake pedal, depressed	11 to 14V
A5-30(STP) - chassis ground	Brake pedal, released	Less than 1.5 V

Captions in illustration

*a	Front side of vehicle wiring harness connector (Skid control computer (brake actuator ASSY)- connector)

NG → Repair or replacement of wiring harness or connector

OK

Replacement of brake actuator ECM only (Refer to BC - 93)

DTC C1288 Different ECM specification

Description of functions

Diagnostic codes	DTC detecting conditions	Faulty part
C1288	The engine variation information which is stored in the skid control computer (brake actuator ASSY) and the engine control computer's variations do not match.	• Engine control computer • Skid control computer (brake actuator ASSY)

Inspection steps

CAUTION:

When the skid control computer (brake actuator ASSY) has been replaced, make sure to perform [VSC(VDC) Centering Mode]. (Refer to BC - 15)

1	Diagnostic code check (CAN communication system)

(1) Using SSM4, check whether the diagnostic code for CAN communication error has been output or not. (Refer to BC - 13)

Result

Result	Go to
No output	A
Output exists	B

B → Go to "CAN communication system (How to troubleshoot)" (Refer to NW - 30)

A

2	Diagnostic code list recheck

(1) Use the SSM4 to check the diagnosis codes. (Refer to BC - 13)

Result

Result	Go to
No output	A
Output exists	B

B → Check and replacement of engine control computer (Refer to ES - 670)

A

Completed

DTC	C1294	AT error

Description of functions

When an automatic transmission system error is input, this code will be output to illuminate the slip indicator light. (VSC system is normal)

Under the automatic transmission system error, TRC and Vehicle stability controls are prohibited for fail safe.

Diagnostic codes	DTC detecting conditions	Faulty part
C1294	Transmission error signal is received	Transmission control computer

Inspection steps

1	Diagnostic code check (automatic transmission system)

(1) Using SSM4, check the diagnostic code for the automatic transmission system. (Refer to AT - 17)

Result

Result	Go to
No output	A
Output exists	B

B → To automatic transmission system (diagnostic code list) (Refer to AT - 11)

A

Check and replacement of transmission control computer (Refer to AT - 322)

BC

DTC	C1300	ECU

Description of functions

Diagnostic codes	DTC detecting conditions	Faulty part
C1300	ECM internal error	Skid control computer (brake actuator ASSY)

Inspection steps

CAUTION:

When the brake actuator ECM has been replaced, make sure to perform [VSC(VDC) Centering Mode]. (Refer to BC - 15)

1	Replacement of brake actuator ECM only

(1) Replace the brake actuator ECM only. (Refer to BC - 93)

Next

Complete

DTC	C1330	FR wheel speed sensor system open circuit/excessive input
DTC	C1331	FL wheel speed sensor system open circuit/excessive input
DTC	C1464	FR wheel speed sensor signal
DTC	C1465	FL wheel speed sensor signal

Description of functions

The speed sensor detects the wheel speed and sends the signal to the skid control computer (brake actuator ASSY). These signals are used for ABS control.

The speed sensor detects magnetic field changes in the magnetic rotor, where the N and S poles are evenly allocated in a circumferential direction, and generates a vehicle speed pulse.

With this vehicle speed pulse, the skid control computer (brake actuator ASSY) detects each wheel's speed.

NOTE:

The following voltage outputs are the values when the vehicle harness connectors are connected to the skid control computer (brake actuator ASSY) and the speed sensor.

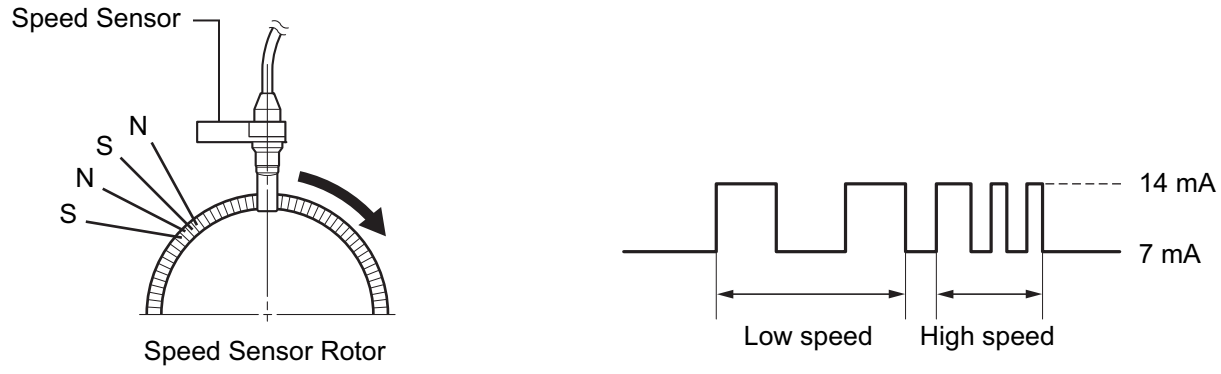

P

Diagnostic codes	DTC detecting conditions	Faulty part
C1330 C1331	Short circuit occurs in the power supply or the signal line of the speed sensor.	• Front speed sensor • Wiring harness or connector • Skid control computer (brake actuator ASSY)

BC

Diagnostic codes	DTC detecting conditions	Faulty part
C1464 C1465	• Signal values are outside the specified range when signals of the four speed sensors are compared. • An abnormal wheel speed is detected.	• Front speed sensor • Front speed sensor, poor installation • Wiring harness or connector • Speed sensor rotor • Skid control computer (brake actuator ASSY)

Circuit figure

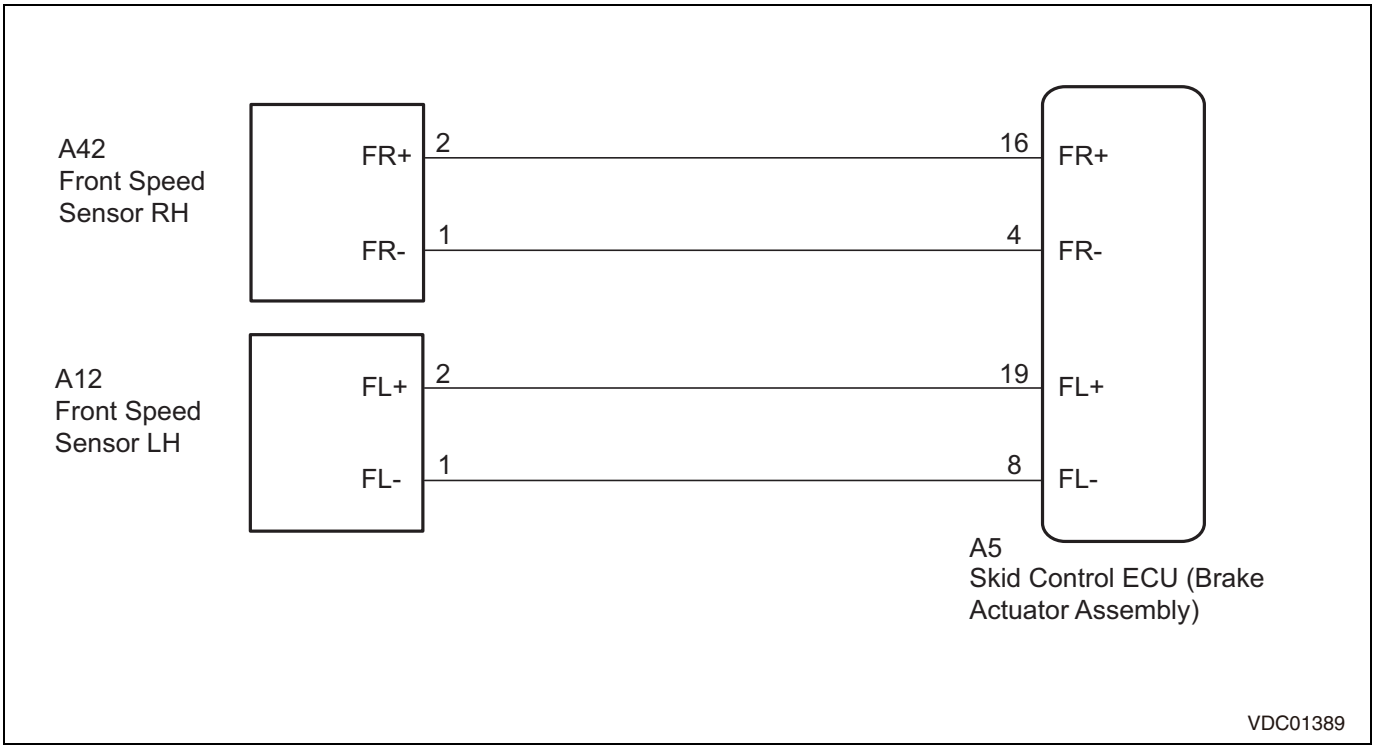

Inspection steps

CAUTION:

When the brake actuator ECM has been replaced, make sure to perform [VSC(VDC) Centering Mode]. (Refer to BC - 15)

1	Data monitor check (wheel speed)

(1) Using SSM4, check [Data monitor] of [Wheel speed] while driving straight at a speed of 10 km/h or more. (Refer to BC - 20)

SSM4 screen: [Brake Control System] →[Data monitor]

Item name	Description/display range	Normal value	Remarks
[Wheel Speed FR]	Indicates the front right wheel speed. Display range: 0 to 326.4km/h	When stopping: 0km/h While driving at a stable speed: No large changes.	-
[Wheel Speed FL]	Indicates the front left wheel speed. Display range: 0 to 326.4km/h	When stopping: 0km/h While driving at a stable speed: No large changes.	-

Criteria: There is no big difference from the speed meter.

NG → Go to Step 3.

OK

BC

2	Diagnostic code list recheck

(1) Using SSM4, clear the diagnostic code. (Refer to BC - 13)
(2) Perform a driving test.
(3) Using SSM4 again, check the diagnostic code output. (Refer to BC - 13)

Result

Result	Go to
Normal	A
Error code	B

B → Go to Step 3.

A

Malfunction reproduction test (Refer to IN - 32)

3	Speed sensor installation condition check

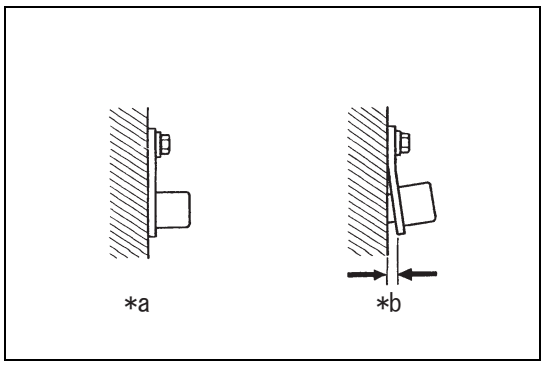

(1) Check installation condition of the speed sensor.
Criteria: Properly installed.

Captions in illustration

*a	Normal
*b	Malfunction

NG → Properly install the speed sensor or replace it.

OK

4	Speed sensor check (foreign matter adhesion)

(1) Remove the speed sensor from the relevant wheel and check it for foreign matter adhesion or damage at the tip. (Refer to BC - 101)
Criteria: There is no foreign particles or damage.
CAUTION:
If there is no damage in the speed sensor through this check, do not replace the speed sensor.

NG → Clean or replace the speed sensor.

OK

5	Check wiring harness and connector (front speed sensor - brake actuator ASSY)

(1) Check the connector of the skid control computer (brake actuator ASSY) for a trouble such as poor engagement or disconnection.
Criteria: No trouble
(2) Turn IG OFF and disconnect the connector A5 from the skid control computer (brake actuator ASSY).

BC

(3) Disconnect the connector, A12 or A42 of the front speed sensor.
(4) Check the case and terminal of the connector for deformation and/or corrosion.
Criteria: No deformation or corrosion.
(5) Measure the resistance between the terminals.

Resistance

RH

Inspection terminals	Inspection conditions	Standard value
A5-16(FR+) - A42-2(FR+)	Always	Less than 1 Ω
A5-16(FR+) - chassis ground	Always	10 k Ωor more
A5-4(FR-) - A42-1(FR-)	Always	Less than 1 Ω
A5-4(FR-) - chassis ground	Always	10 k Ωor more

LH

Inspection terminals	Inspection conditions	Standard value
A5-19(FL+) - A12-2(FL+)	Always	Less than 1 Ω
A5-19(FL+) - chassis ground	Always	10 k Ωor more
A5-8(FL-) - A12-1(FL-)	Always	Less than 1 Ω
A5-8(FL-) - chassis ground	Always	10 k Ωor more

NG → Repair or replacement of wiring harness or connector

OK

6	Skid control computer check (speed sensor power supply)

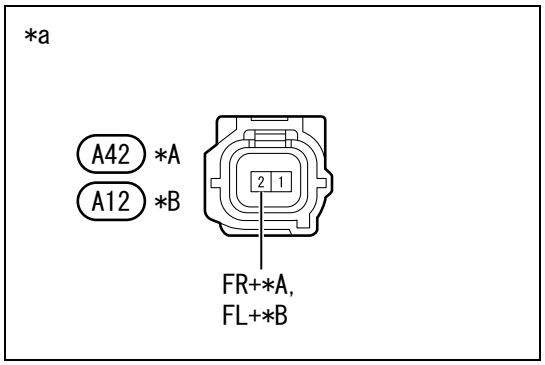

CAUTION:
Check voltage with front speed sensor connector connected and IG OFF→ON.
(1) Measure the voltage between the terminal and chassis ground.

Voltage

RH

Inspection terminals	Inspection conditions	Standard value
A42-2(FR+) - chassis ground	IG ON	8 to 14V

LH

Inspection terminals	Inspection conditions	Standard value
A12-2(FL+) - chassis ground	IG ON	8 to 14V

Captions in illustration

*A	RH
*B	LH
*a	Front side of vehicle wiring harness connector (Front speed sensor connector)

NG → Replacement of skid control computer (brake actuator ASSY) (Refer to BC - 93)

OK

BC

7	Diagnostic code list recheck

(1) Using SSM4, clear the diagnostic code. (Refer to BC - 13)
(2) Perform a driving test.
(3) Using SSM4 again, check the diagnostic code output. (Refer to BC - 13)

Result

Result	Go to
Normal	A
Error code	B

B → Go to Step 8.

A

Malfunction reproduction test (Refer to IN - 32)

8	Replacement of front speed sensor

(1) Replace the relevant front speed sensor with error code. (Refer to BC - 101)

Next

9	Diagnostic code list recheck

(1) Using SSM4, clear the diagnostic code. (Refer to BC - 13)
(2) Perform a driving test.
(3) Using SSM4 again, check the diagnostic code output. (Refer to BC - 13)

Result

Result	Go to
Normal	A
Error code	B

B → Go to Step 10.

A

Completed

10	Replacement of speed sensor rotor

(1) Replace the relevant speed sensor rotor with error code. (Refer to AD - 6)
NOTE:
The speed sensor rotor is assembled in the front axle hub. Therefore, replace the front axle hub.

Next

11	Diagnostic code list recheck

(1) Using SSM4, clear the diagnostic code. (Refer to BC - 13)
(2) Perform a driving test.
(3) Using SSM4 again, check the diagnostic code output. (Refer to BC - 13)

Result

Result	Go to
Normal	A
Error code	B

B → Replacement of brake actuator ECM only (Refer to BC - 93)

A

Completed

DTC	C1332	Rear Right ABS Sensor Circuit Open or Shorted Battery
DTC	C1333	RL wheel speed sensor system open circuit/excessive input
DTC	C1466	RR wheel speed sensor signal
DTC	C1467	RL wheel speed sensor signal

Description of functions

The speed sensor detects the wheel speed and sends the signal to the skid control computer. These signals are used for ABS control.

The speed sensor detects magnetic field changes in the magnetic rotor, where the N and S poles are evenly allocated in a circumferential direction, and generates a vehicle speed pulse.

With this vehicle speed pulse, the skid control computer detects the speed for each wheel.

NOTE:

The following voltage outputs are the values when the vehicle harness connectors are connected to the skid control computer (brake actuator ASSY) and the speed sensor.

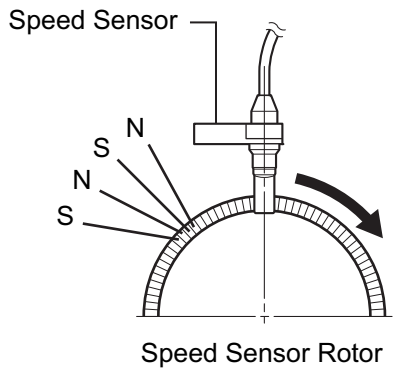

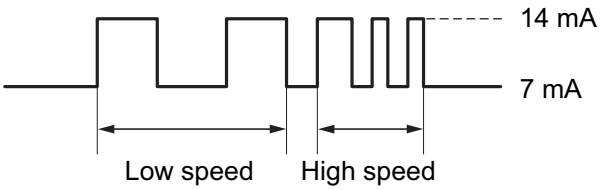

P

Diagnostic codes	DTC detecting conditions	Faulty part
C1332 C1333	Short circuit occurs in the power supply or the signal line of the speed sensor.	• Rear speed sensor • Wiring harness or connector • Skid control computer (brake actuator ASSY)
C1466 C1467	• Signal values are outside the specified range when signals of the four speed sensors are compared. • An abnormal wheel speed is detected.	• Rear speed sensor • Rear speed sensor, poor installation • Wiring harness or connector • Speed sensor rotor • Skid control computer (brake actuator ASSY)

Circuit figure

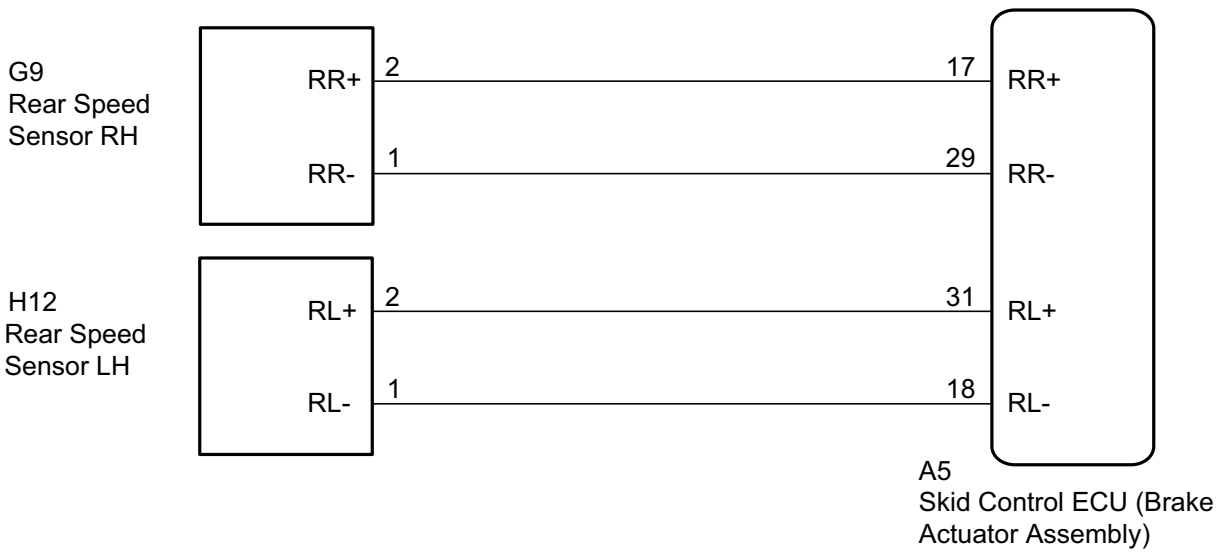

BC

Inspection steps
CAUTION:
When the brake actuator ECM has been replaced, make sure to perform [VSC(VDC) Centering Mode]. (Refer to BC - 15)

1	Data monitor check (wheel speed)

(1) Using SSM4, check [Data monitor] of [Wheel speed] while driving straight at a speed of 10 km/h or more. (Refer to BC - 20)

SSM4 screen: [Brake Control System] →[Data monitor]

Item name	Description/display range	Normal value	Remarks
Wheel speed RR	Indicates the rear right wheel speed. Display range: 0 to 326.4km/h	When stopping: 0km/h While driving at a stable speed: No large changes.	-
Wheel speed RL	Indicates the rear left wheel speed. Display range: 0 to 326.4km/h	When stopping: 0km/h While driving at a stable speed: No large changes.	-

Criteria: There is no big difference from the speed meter.

NG → Go to Step 3.

OK

2	Diagnostic code list recheck

(1) Using SSM4, clear the diagnostic code. (Refer to BC - 13)
(2) Perform a driving test.
(3) Using SSM4 again, check the diagnostic code output. (Refer to BC - 13)

Result

Result	Go to
Normal	A
Error code	B

B → Go to Step 3.

A

Malfunction reproduction test (Refer to IN - 32)

3	Speed sensor installation condition check

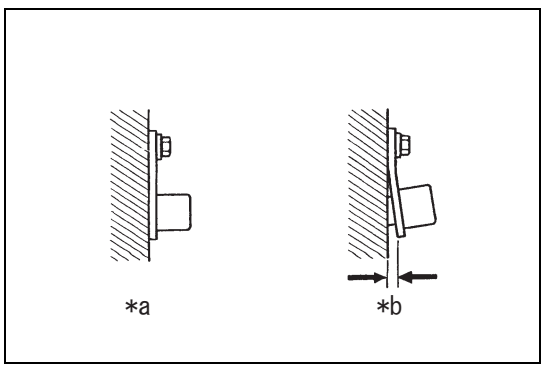

(1) Check installation condition of the speed sensor.
Criteria: Properly installed.

Captions in illustration

*a	Normal
*b	Malfunction

NG → Properly install the speed sensor or replace it.

BC

OK

4	Speed sensor check (foreign matter adhesion)

(1) Remove the speed sensor from the relevant wheel and check it for foreign matter adhesion or damage at the tip. (Refer to BC - 104)
Criteria: There is no foreign particles or damage.
CAUTION:
If there is no damage in the speed sensor through this check, do not replace the speed sensor.

NG → Clean or replace the speed sensor.

OK

5	Check wiring harness and connector (rear speed sensor brake actuator ASSY)

(1) Check the connector of the skid control computer (brake actuator ASSY) for a trouble such as poor engagement or disconnection.
Criteria: No trouble
(2) Turn IG OFF and disconnect the connector A5 from the skid control computer (brake actuator ASSY).
(3) Disconnect the connector, G9 or H12 for the rear speed sensor.
(4) Check the case and terminal of the connector for deformation and/or corrosion.
Criteria: No deformation or corrosion.
(5) Measure the resistance between the terminals.

Resistance

RH

Inspection terminals	Inspection conditions	Standard value
A5-17(RR+) - G9-2(RR+)	Always	Less than 1 Ω
A5-17(RR+) - chassis ground	Always	10 k Ωor more
A5-29(RR-) - G9-1(RR-)	Always	Less than 1 Ω
A5-29(RR-) - chassis ground	Always	10 k Ωor more

LH

Inspection terminals	Inspection conditions	Standard value
A5-31(RL+) - H12-2(RL+)	Always	Less than 1 Ω
A5-31(RL+) - chassis ground	Always	10 k Ωor more
A5-18(RL-) - H12-1(RL-)	Always	Less than 1 Ω
A5-18(RL-) - chassis ground	Always	10 k Ωor more

NG → Repair or replacement of wiring harness or connector

OK

BC

6	Skid control computer check (speed sensor power supply)

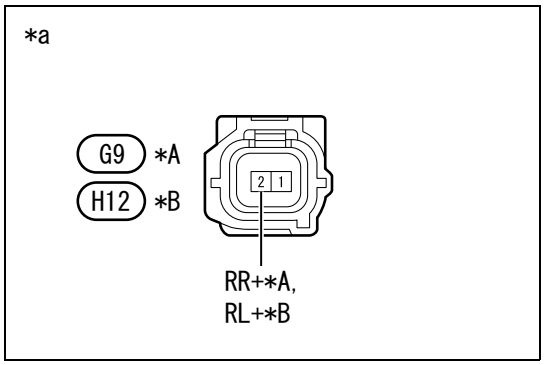

CAUTION:
With the rear speed sensor connector connected, turn the ignition switch from OFF to ON, and then check the voltage.

(1) Measure the voltage between the terminal and chassis ground.

Voltage

RH

Inspection terminals	Inspection conditions	Standard value
G9-2(RR+) - chassis ground	IG ON	8 to 14V

LH

Inspection terminals	Inspection conditions	Standard value
H12-2(RL+) - chassis ground	IG ON	8 to 14V

Captions in illustration

*A	RH
*B	LH
*a	Front side of vehicle wiring harness connector (Rear speed sensor connector)

NG → Replacement of skid control computer (brake actuator ASSY) (Refer to BC - 93)

OK

7	Diagnostic code list recheck

(1) Using SSM4, clear the diagnostic code. (Refer to BC - 13)
(2) Perform a driving test.
(3) Using SSM4 again, check the diagnostic code output. (Refer to BC - 13)

Result

Result	Go to
Normal	A
Error code	B

B → Go to Step 8.

A

BC

Malfunction reproduction test (Refer to IN - 32)

8	Replacement of rear speed sensor

(1) Replace the relevant rear speed sensor with error code. (Refer to BC - 104)

Next

9	Diagnostic code list recheck

(1) Using SSM4, clear the diagnostic code. (Refer to BC - 13)
(2) Perform a driving test.
(3) Using SSM4 again, check the diagnostic code output. (Refer to BC - 13)

Result

Result	Go to
Normal	A
Error code	B

B → Go to Step 10.

A

Completed

10	Replacement of speed sensor rotor

(1) Replace the relevant speed sensor rotor with error code. (Refer to AD - 15)
NOTE:
The speed sensor rotor is assembled in the rear axle hub. Therefore, replace the rear axle hub.

Next

11	Diagnostic code list recheck

(1) Using SSM4, clear the diagnostic code. (Refer to BC - 13)
(2) Perform a driving test.
(3) Using SSM4 again, check the diagnostic code output. (Refer to BC - 13)

Result

Result	Go to
Normal	A
Error code	B

B → Replacement of brake actuator ECM only (Refer to BC - 93)

A

Completed

DTC	C146C	Motor relay system

Description of functions
The ABS motor relay is integrated into the brake actuator ASSY.

The skid control computer (brake actuator ASSY) turns on the ABS motor relay to operate the pump motor in the brake actuator ASSY while ABS, TRC, Vehicle stability control, or brake assist is operating.
If the power supply voltage for the ABS motor relay drops due to insufficient output of the battery or alternator, this code may be stored in memory.

Diagnostic codes	DTC detecting conditions	Faulty part
C146C	• When the motor relay is started, power is not supplied to the pump motor. • When the motor relay is not operating, voltage inside the pump motor increases. • Skid control computer (brake actuator ASSY) detects improper operation of the pump motor.	• ABS No.1 fuse • Wiring harness or connector • Skid control computer (brake actuator ASSY)

Circuit figure

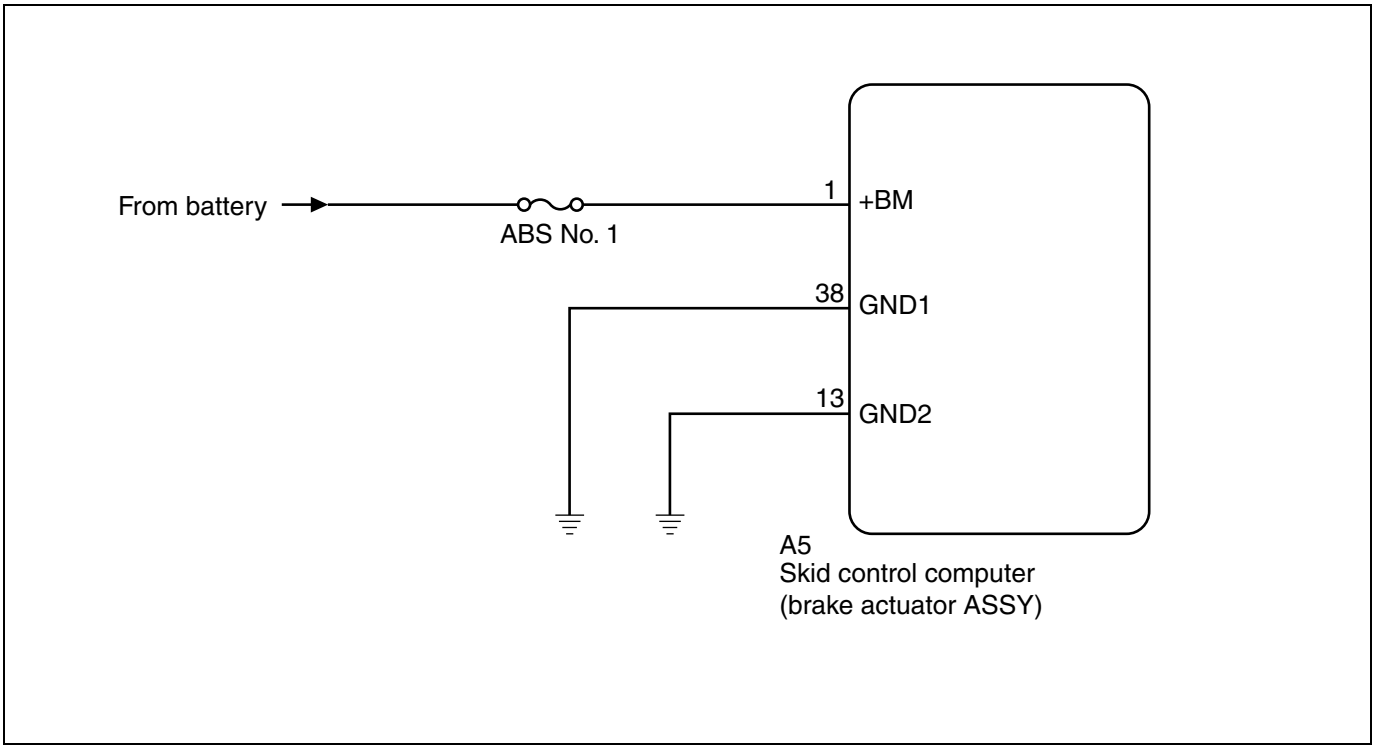

Inspection steps
CAUTION:
- When the skid control computer (brake actuator ASSY) has been replaced, make sure to perform [VSC(VDC) Centering Mode]. (Refer to BC - 15)
- Before performing troubleshooting, check the fuse for this circuit.

BC

1	Check wiring harness and connector (motor relay power supply)

(1) Check the connector of the skid control computer (brake actuator ASSY) for a trouble such as poor engagement or disconnection.
Criteria: No trouble
(2) Turn IG OFF and disconnect the connector A5 from the skid control computer (brake actuator ASSY).
(3) Check the case and terminal of the connector for deformation and/or corrosion.
Criteria: No deformation or corrosion.

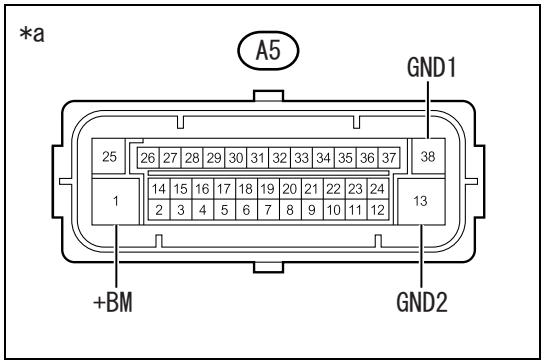

(4) Check the voltage and resistance between terminals.
Voltage

Inspection terminals	Inspection conditions	Standard value
A5-1(+BM) - chassis ground	Always	11 to 14V

Resistance

Inspection terminals	Inspection conditions	Standard value
A5-38(GND1) - chassis ground	Always	Less than 1 Ω
A5-13(GND2) - chassis ground	Always	Less than 1 Ω

Captions in illustration

*a	Front side of vehicle wiring harness connector (Skid control computer (brake actuator ASSY)- connector)

NG → Repair or replacement of wiring harness or connector

OK

2	Diagnostic code list recheck

(1) Using SSM4, clear the diagnostic code. (Refer to BC - 13)
(2) Turn IG OFF→ON, and drive for 30 seconds or more at the speed of 40km/h or more.
(3) If the ABS warning light illuminates, check the diagnostic code, using SSM4. (Refer to BC - 13)

Result

Result	Go to
No output	A
Output exists	B

NOTE:
- The skid control computer (brake actuator ASSY) self-diagnoses the motor relay circuit when IG is turned ON and the vehicle speed, 40 km/h has been input with the stop light switch turned OFF.
- If the normal diagnostic code is output, lightly shake the connector, wiring harness, and fuse related to the skid control computer (brake actuator ASSY) to make sure that no error code is output.
- If an error code has been output by shaking them, check or repair the relevant connector or wiring harness.

B → Replacement of skid control computer (brake actuator ASSY) (Refer to BC - 93)

A

Malfunction reproduction test (Refer to IN - 32)

DTC	C146E	Valve relay system

Description of functions

The ABS solenoid relay is integrated into the brake actuator ASSY and supply power to the ABS solenoid.

After turning IG ON, if the solenoid has been judged as normal by self-diagnosis during initial check, turn the relay ON. If open or short circuit has been detected, turn the relay OFF.

If the power supply voltage for the ABS solenoid relay drops due to insufficient output of the battery or alternator, this code may be stored in memory.

Diagnostic codes	DTC detecting conditions	Faulty part
C146E	• The ABS solenoid relay driving circuit in the skid control computer (brake actuator ASSY) does not operate normally. • The ABS solenoid relay cannot be turned ON/OFF.	• ABS No.2 fuse • Wiring harness or connector • Skid control computer (brake actuator ASSY)

Circuit figure

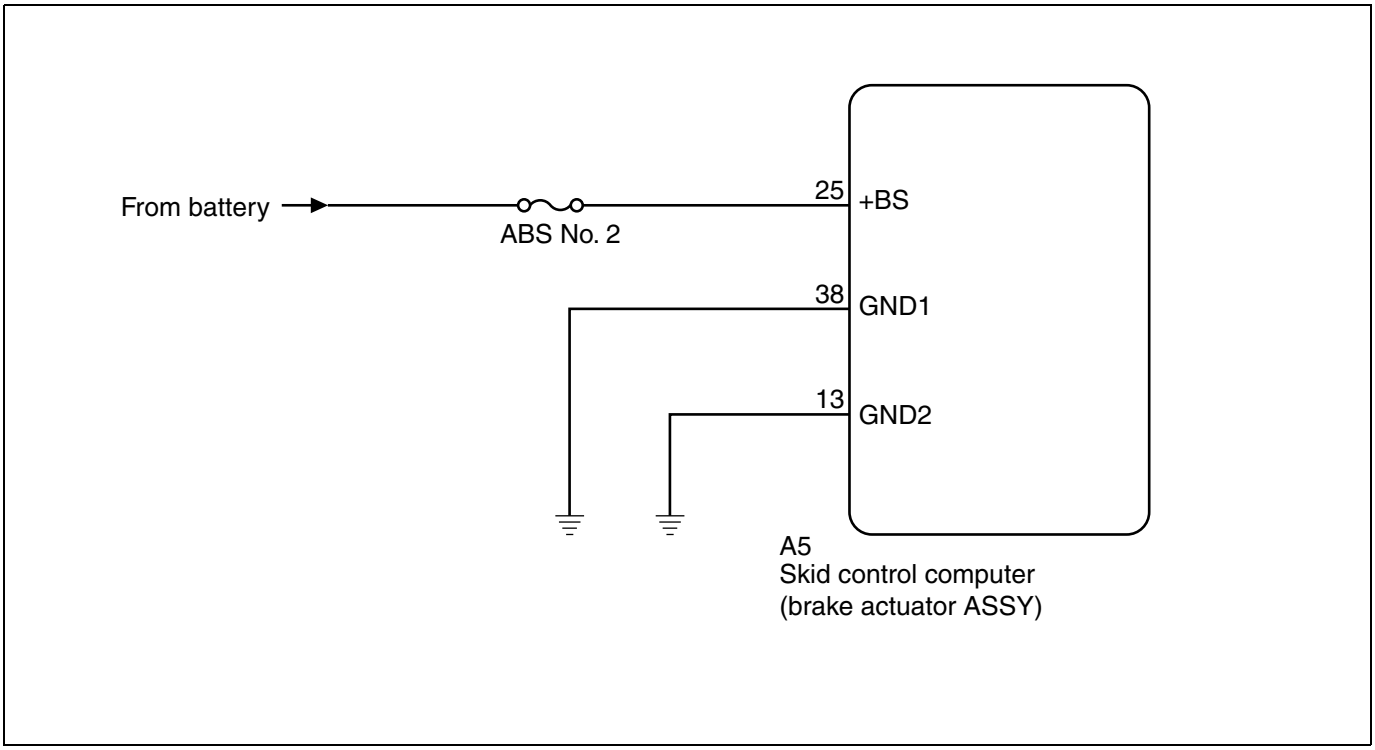

Inspection steps

CAUTION:

- When the brake actuator ECM has been replaced, make sure to perform [VSC(VDC) Centering Mode]. (Refer to BC - 15)
- Before performing troubleshooting, check the fuse for this circuit.

BC

1	Check wiring harness and connector (solenoid relay power supply)

(1) Check the connector of the skid control computer (brake actuator ASSY) for a trouble such as poor engagement or disconnection.
Criteria: No trouble

(2) Turn IG OFF and disconnect the connector A5 from the skid control computer (brake actuator ASSY).

(3) Check the case and terminal of the connector for deformation and/or corrosion.

Criteria: No deformation or corrosion.

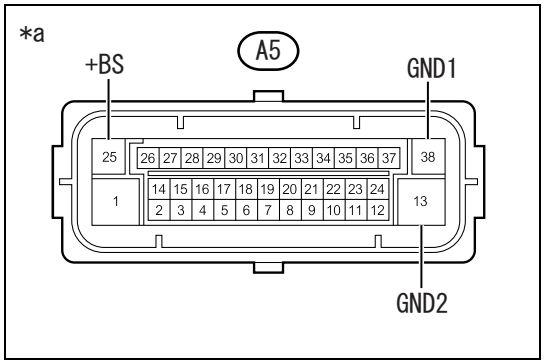

(4) Check the voltage and resistance between terminals.
Voltage

Inspection terminals	Inspection conditions	Standard value
A5-25(+BS) - chassis ground	Always	11 to 14V

Resistance

Inspection terminals	Inspection conditions	Standard value
A5-38(GND1) - chassis ground	Always	Less than 1 Ω
A5-13(GND2) - chassis ground	Always	Less than 1 Ω

Captions in illustration

*a	Front side of vehicle wiring harness connector (Skid control computer (brake actuator ASSY)- connector)

NG → Repair or replacement of wiring harness or connector

OK

2	Diagnostic code list recheck

(1) Using SSM4, clear the diagnostic code. (Refer to BC - 13)
(2) Turn IG OFF→ON, and drive for 30 seconds or more at the speed of 40km/h or more.
(3) If the ABS warning light illuminates, check the diagnostic code, using SSM4. (Refer to BC - 13)

Result

Result	Go to
No output	A
Output exists	B

NOTE:
- The skid control computer (brake actuator ASSY) self-diagnose the solenoid relay circuit when IG is turned ON and the vehicle speed, 15 km/h has been input with the stop light switch turned OFF.
- If the normal diagnostic code is output, lightly shake the connector, wiring harness, and fuse related to the skid control computer (brake actuator ASSY) to make sure that no error code is output.
- If an error code has been output by shaking them, check or repair the relevant connector or wiring harness.

B → Replacement of brake actuator ECM only (Refer to BC - 93)

A

Malfunction reproduction test (Refer to IN - 32)

BC

DTC	C1492	Clutch switch OFF malfunction

DTC	C1493	Clutch switch ON malfunction

Circuit figure

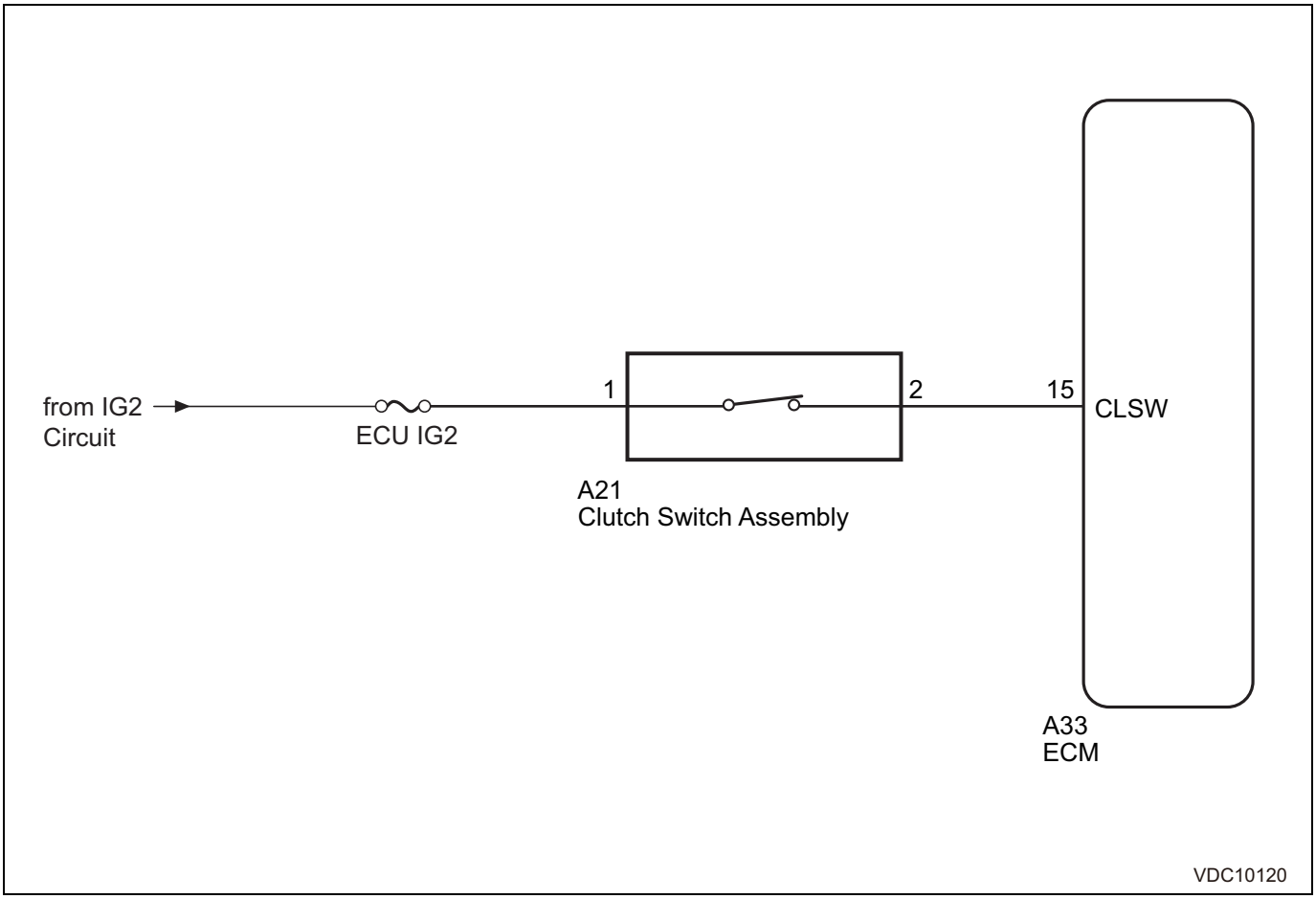

Diagnostic codes	DTC detecting conditions	Faulty part
C1492 C1493	Clutch switch signal abnormal	• CAN communication system • Clutch switch ASSY • Wiring harness and connector • Engine control computer • Skid control computer (brake actuator ASSY)

Inspection steps

CAUTION:

- When the brake actuator ECM has been replaced, make sure to perform [VSC(VDC) Centering Mode]. (Refer to BC - 15)
- Before performing troubleshooting, check the fuse for this circuit.

1	Diagnostic code check (CAN communication system)

(1) Using SSM4, check whether the diagnostic code for CAN communication error has been output or not. (Refer to BC - 13)

Result

Result	Go to
No output	A
Output exists	B

B → Go to "CAN communication system (How to troubleshoot)" (Refer to NW - 5)

A

2	Data monitor check (clutch switch)

(1) Using SSM4, check [Data monitor] of [Clutch Switch]. (Refer to ES - 43)

SSM4 screen: [Engine Control System] →[Data monitor]

Item name	Description/display range	Normal value	Remarks
[Clutch Switch]	Indicates clutch switch operation. Display range: OFF/ON	OFF: Clutch pedal released ON: Clutch pedal depressed	-

NG → Go to Step 4.

OK

3	Diagnostic code list recheck

(1) Using SSM4, clear the diagnostic code. (Refer to BC - 13)
(2) Perform a driving test.
(3) Using SSM4 again, check the diagnostic code output. (Refer to BC - 13)

Result

Result	Go to
Normal	A
Error code	B

B → Replacement of brake actuator ECM only (Refer to BC - 93)

A

Completed

4	Inspection of wiring harness and connector (clutch switch - engine control computer)

(1) Check the connectors of the engine control computer and clutch switch for a trouble such as poor engagement or disconnection.
(2) Disconnect the connector for the engine control computer.
(3) Disconnect the clutch switch connector.
(4) Measure the resistance between the terminals. (For terminal arrangement, refer to ES - 36.)

Resistance

Inspection terminals	Inspection conditions	Standard value
A21-2 - A33-15	Always	Less than 1 Ω

NG → Repair or replacement of wiring harness or connector

OK

Replacement of clutch switch (Refer to CL - 28)

DTC	C1494	Reverse switch OFF malfunction

DTC	C1495	Reverse switch ON malfunction

Circuit figure

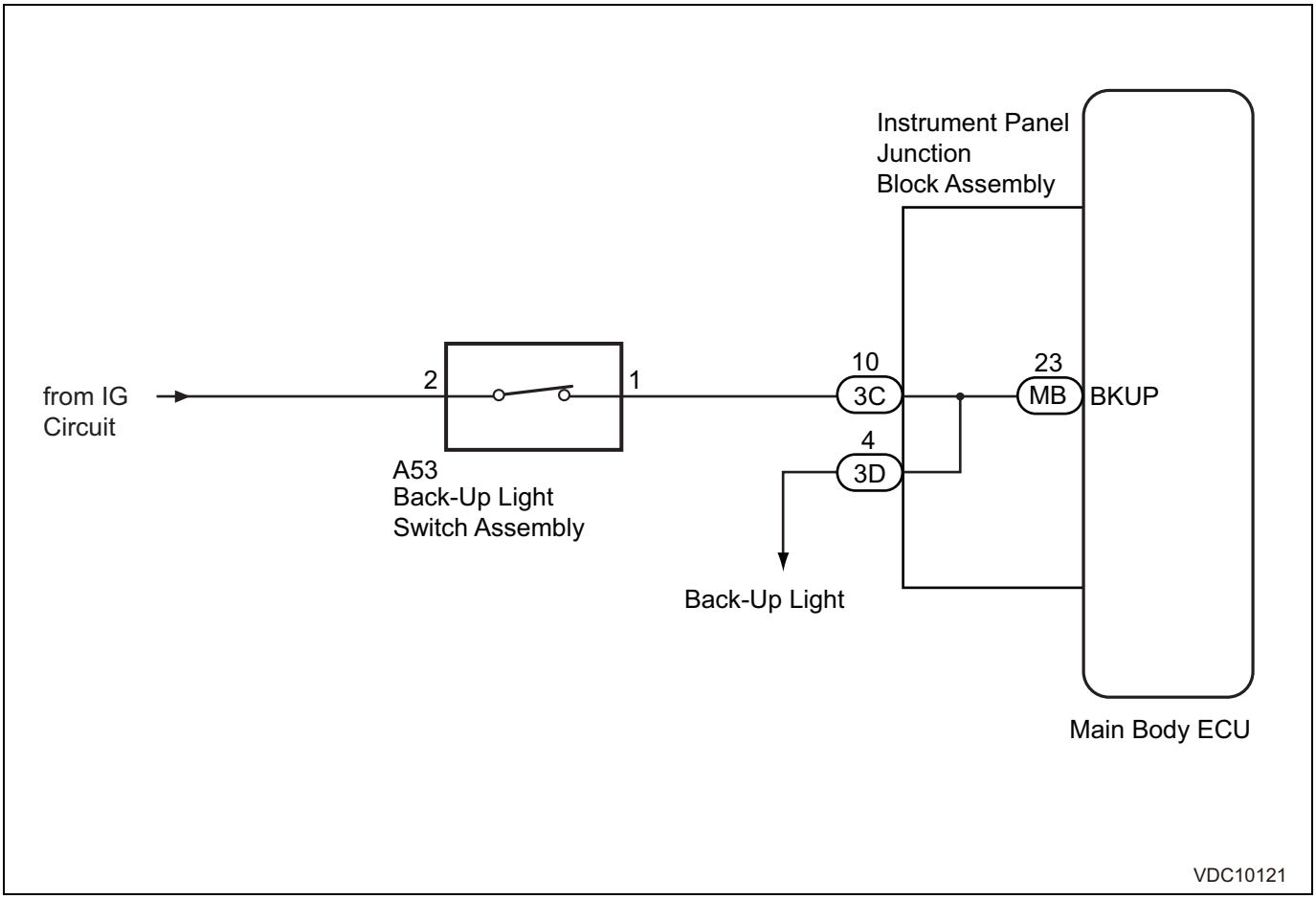

Diagnostic codes	DTC detecting conditions	Faulty part
C1494 C1495	Reverse signal abnormal	• CAN communication system • Back-up light switch ASSY • Wiring harness and connector • Main body ECM • Skid control computer (brake actuator ASSY)

BC

Inspection steps

CAUTION:

- When the brake actuator ECM has been replaced, make sure to perform [VSC(VDC) Centering Mode]. (Refer to BC - 15)
- Before performing troubleshooting, check the fuse for this circuit.

1	Diagnostic code check (CAN communication system)

(1) Using SSM4, check whether the diagnostic code for CAN communication error has been output or not. (Refer to BC - 13)

Result

Result	Go to
No output	A
Output exists	B

B → Go to "CAN communication system (How to troubleshoot)" (Refer to NW - 30)

A

2	Data monitor check (MT reverse switch)

(1) Using SSM4, check [Data monitor] of [MT Reverse SW]. (Refer to LE - 22)

SSM4 screen: [Body Control] →[Data monitor]

Item name	Description/display range	Normal value	Remarks
[MT Reverse SW]	Indicates back-up light switch operation. Display range: OFF/ON	OFF: Shift lever in a position other than reverse ON: Shift lever in reverse	-

NG → Go to Step 4.

OK

3	Diagnostic code list recheck

(1) Using SSM4, clear the diagnostic code. (Refer to BC - 13)
(2) Perform a driving test.
(3) Using SSM4 again, check the diagnostic code output. (Refer to BC - 13)

Result

Result	Go to
Normal	A
Error code	B

B → Replacement of brake actuator ECM only (Refer to BC - 93)

A

4	Back-up light inspection

(1) Turn IG ON and move the shift lever to reverse to check that the back-up light illuminates.
Criteria: The back-up light turns on.

NG → Inspection of the back-up light circuit

BC

OK

5	Inspection of the wiring harnesses and connectors (back-up light switch - instrument junction block ASSY)

(1) Check the connectors of instrument panel junction block ASSY, back-up light switch for poor engagement or disconnection.
(2) Disconnect the connector of the instrument panel junction block ASSY.
(3) Disconnect the connector of the back-up light switch.
(4) Measure the resistance between the terminals. (For terminal arrangement, refer to LE - 20.)

Resistance

Inspection terminals	Inspection conditions	Standard value
A53-1 - 3C-10	Always	Less than 1 Ω

NG → Repair or replacement of wiring harness or connector

OK

Replacement of the back-up light switch (Refer to MT - 10)

DTC	U0073	Control Module Communication Bus "A" Off
DTC	U0100	Engine data, not received
DTC	U0101	Transmission data, not received
DTC	U0126	Lost Communication With Steering Angle Sensor Module
DTC	U0140	Missing data for body integrated unit

Description of functions

The skid control computer (brake actuator ASSY) inputs signals of the engine control computer, the transmission control computer, and the steering sensor through CAN communication.

Diagnostic codes	DTC detecting conditions	Faulty part
U0073	The voltage at +BS terminal is between 9.6 to 16.5 V and bus off status continues for 0.1 second or more.	CAN communication system
U0100	The vehicle is running and the voltage at +BS terminal is between 9.6 to 16.5 V, and the data transmission or reception to the engine control computer is impossible for 0.5 seconds or more.	• CAN communication line • Skid control computer (brake actuator ASSY) • Engine control computer
U0101	The vehicle is running and the voltage at +BS terminal is between 9.6 to 16.5 V, and the data transmission or reception to the transmission control computer is impossible for 0.5 seconds or more.	• CAN communication line • Skid control computer (brake actuator ASSY) • Transmission control computer
U0126	The vehicle is running and the voltage at +BS terminal is between 9.6 to 16.5 V, and the data reception from the steering sensor is impossible for 0.1 second or more.	• CAN communication line • Skid control computer (brake actuator ASSY) • Steering sensor

Diagnostic codes	DTC detecting conditions	Faulty part
U0140	The vehicle is running and the voltage at +BS terminal is between 9.6 to 16.5 V, and the data transmission or reception to the main body ECM is impossible for 0.5 seconds or more.	• CAN communication line • Skid control computer (brake actuator ASSY) • Main body ECM

Inspection steps

1	Diagnostic code list recheck

(1) Using SSM4, clear the diagnostic code. (Refer to BC - 13)
(2) Perform a driving test.
(3) Using SSM4 again, check the diagnostic code output. (Refer to BC - 13)

Result

Result	Go to
Error code	A
Normal	B

B → Malfunction reproduction test (Refer to IN - 32)

A → Go to "CAN communication system (How to troubleshoot)" (Refer to NW - 30)

ABS warning light remains ON

Description of functions

The skid control ECM is connected to the combination meter ASSY through the CAN communication.

When one of the following conditions is detected, the ABS warning light illuminates.

- The skid control ECM connector is disconnected from the skid control ECM.
- The skid control ECM has trouble in its internal circuit.
- Wiring harness between the combination meter ASSY and the skid control ECM are open.
- ABS control system is defective.

NOTE:

When the skid control ECM has trouble, in some cases the SSM4 may not be useful.

Circuit figure

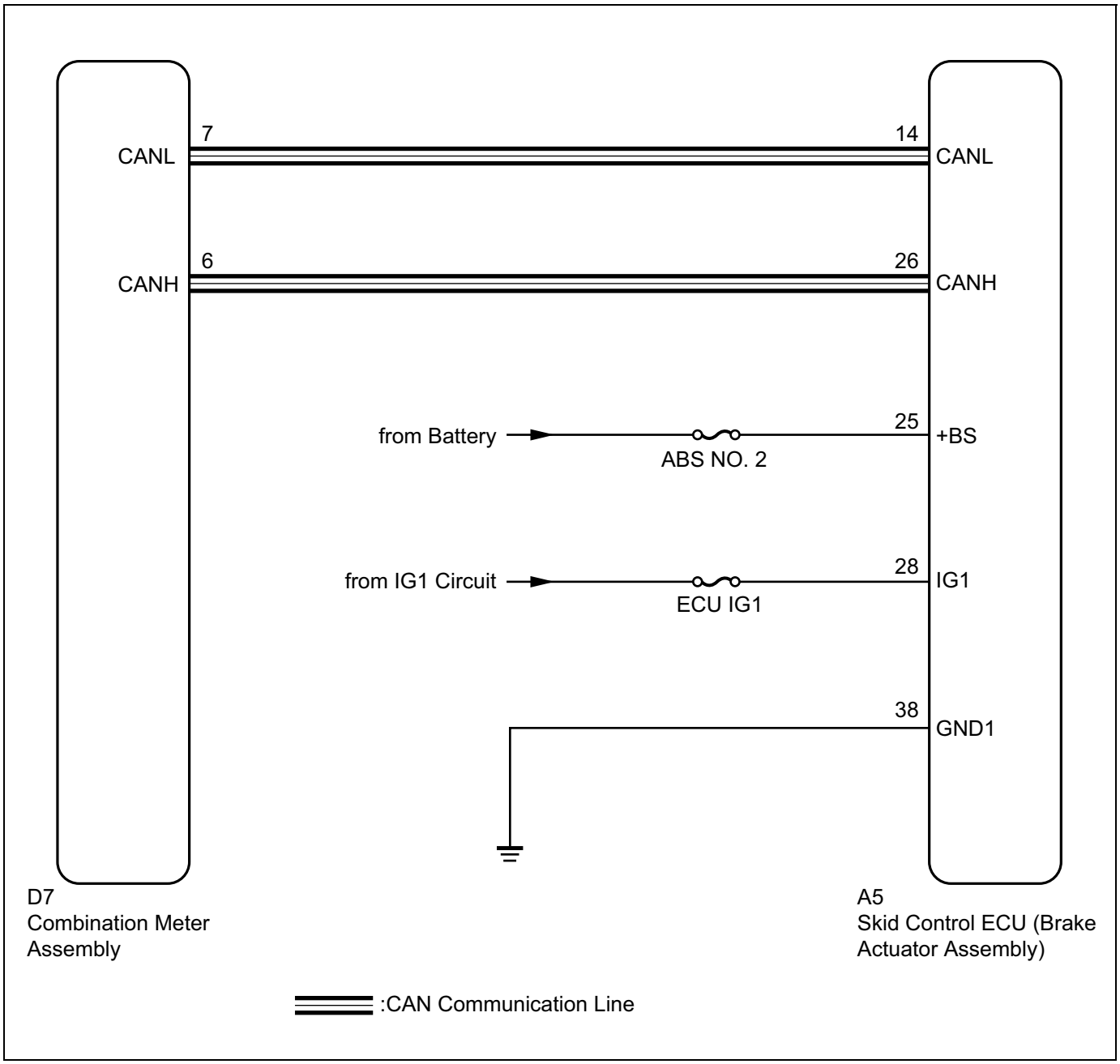

Inspection steps

CAUTION:

- When the skid control computer (brake actuator ASSY) has been replaced, make sure to perform [VSC(VDC) Centering Mode]. (Refer to BC - 15)
- Before performing troubleshooting, check the fuse for this circuit.

1	Inspection of connection for each part

(1) Lightly shake the connectors and the wiring harness of the skid control computer (brake actuator ASSY) up/down/left/right, and check the illumination status for the ABS warning light.

Criteria: The ABS warning light status does not change.

NG	Repair or replacement of wiring harness or connector

OK

2	Diagnostic code check (CAN communication system)

(1) Check CAN communication system. (Refer to NW - 30)

Result

Result	Go to
No output	A
Output exists	B

B → Go to "CAN communication system (How to troubleshoot)" (Refer to NW - 30)

A

3	Check wiring harness and connector (+BS, IG1, GND1, GND2 terminals)

(1) Check the connector of the skid control computer (brake actuator ASSY) for a trouble such as poor engagement or disconnection.
Criteria: No trouble

(2) Turn IG OFF and disconnect the connector A5 from the skid control computer (brake actuator ASSY).

(3) Check the case and terminal of the connector for deformation and/or corrosion.
Criteria: No deformation or corrosion.

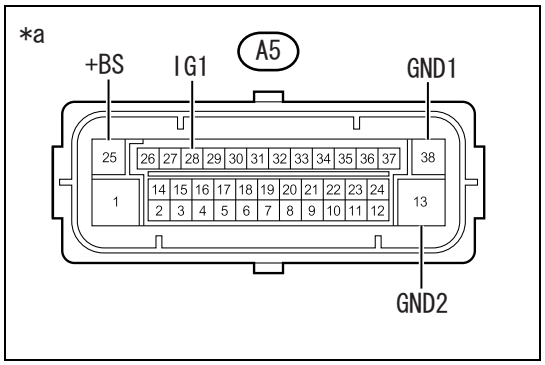

(4) Check the voltage and resistance between terminals.

Voltage

Inspection terminals	Inspection conditions	Standard value
A5-25(+BS) - chassis ground	Always	11 to 14V
A5-28(IG1) - chassis ground	IG ON	11 to 14V

Resistance

Inspection terminals	Inspection conditions	Standard value
A5-38(GND1) - chassis ground	Always	Less than 1 Ω
A5-13(GND2) - chassis ground	Always	Less than 1 Ω

Captions in illustration

*a	Front side of vehicle wiring harness connector (Skid control computer (brake actuator ASSY)- connector)

NOTE:
If there is a malfunction in GND1 and GND2 terminals, check the ground point for looseness.

NG → Repair or replacement of wiring harness or connector

BC

OK

To meter & gauge system (How to troubleshoot) (Refer to ME - 19)

The ABS warning light does not illuminate

Description of functions

The skid control ECM is connected to the combination meter ASSY through the CAN communication.

Inspection steps

CAUTION:

When the skid control ECM (brake actuator ASSY) has been replaced, make sure to perform [VSC(VDC) Centering Mode]. (Refer to BC - 19)

1	Diagnostic code check (CAN communication system)

(1) Check CAN communication system. (Refer to NW - 30)

Result

Result	Go to
No output	A
Output exists	B

B → Go to "CAN communication system (How to troubleshoot)" (Refer to NW - 30)

A

2	ABS warning light check

(1) Disconnect the skid control ECM connector.
(2) Turn the ignition switch to ON.
(3) Check that the ABS warning light illuminates.
Criteria: The ABS warning light illuminates.

NOTE:

If this page is referenced while performing troubleshooting described in the symptom table, go back to the table and go to the next step before replacing parts. (Refer to BC - 7)

NG → Go to Step 3.

OK

Currently normal

3	Combination meter ASSY check

(1) Turn the ignition switch to OFF.
(2) Reconnect the skid control ECM connector.
(3) Start the engine.
(4) Using SSM4, display [Active Test] of the combination meter ASSY (meter CPU). (Refer to ME - 27)

BC

(5) Check the combination meter ASSY.

Criteria: In response to SSM4 operation, the ABS warning light turns ON/OFF.

NOTE:

If this page is referenced while performing troubleshooting described in the symptom table, go back to the table and go to the next step before replacing parts. (Refer to BC - 7)

NG → Replacement of combination meter ASSY (Refer to ME - 3)

OK

Replacement of brake actuator ASSY

Brake warning light remains ON

Description of functions

The skid control ECM is connected to the combination meter ASSY through the CAN communication.

When one of the following conditions is detected, the brake warning light illuminates.

- The skid control ECM connector is disconnected from the skid control ECM.
- The brake fluid level is insufficient.
- The parking brake is being applied.
- EBD control is not allowed.

Circuit figure

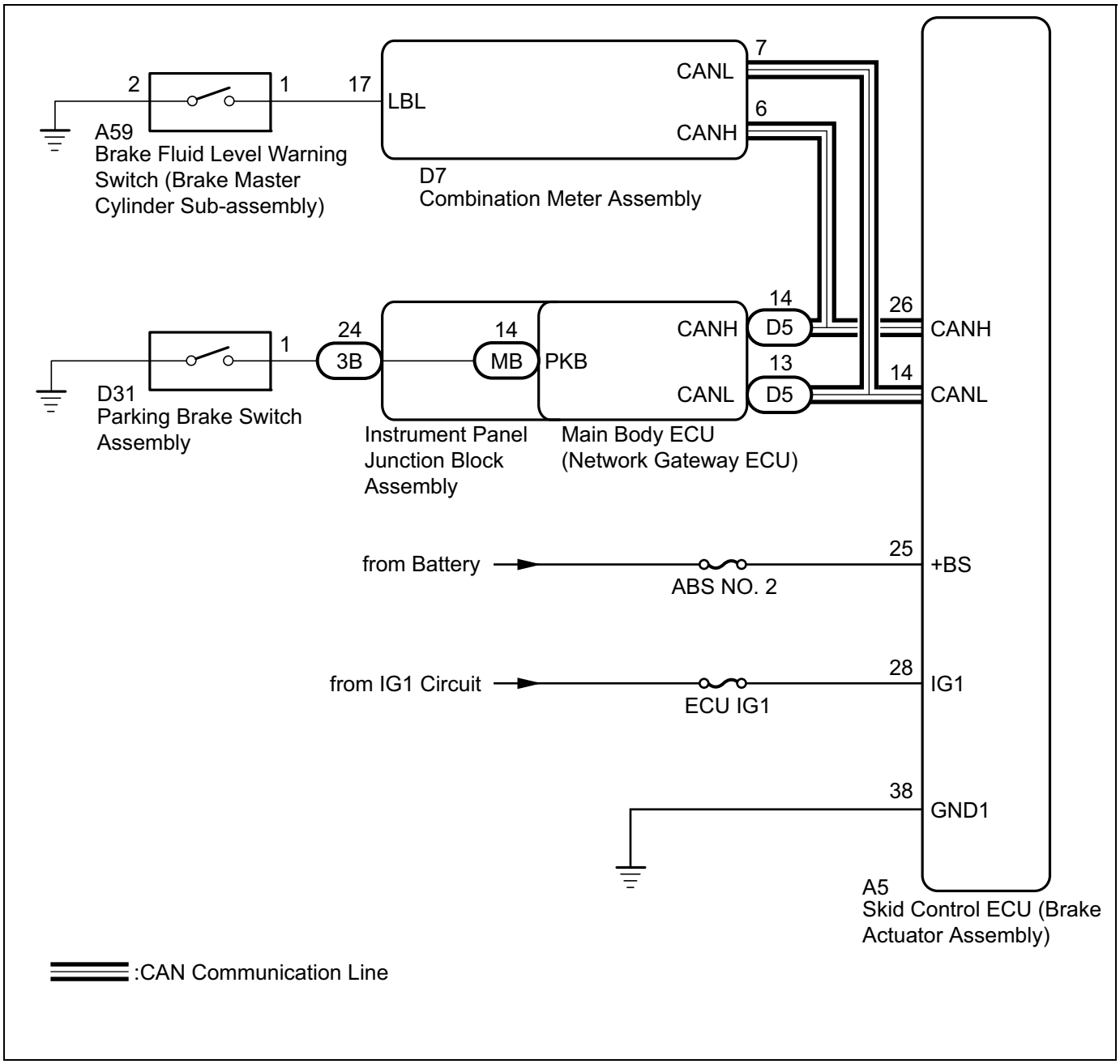

Inspection steps

CAUTION:

- When the skid control computer (brake actuator ASSY) has been replaced, make sure to perform [VSC(VDC) Centering Mode]. (Refer to BC - 15)
- Before performing troubleshooting, check the fuse for this circuit.

1	Preliminary inspection

(1) Make sure that the following conditions for turning off the brake warning light are met.
  (a) The ABS warning light is OFF.
  (b) The brake fluid is sufficient in the brake master cylinder reservoir.
  (c) The parking brake is completely released.

Next

2	Inspection of connection for each part

(1) Lightly shake the connectors and the wiring harness at eat part up/down/left/right, to check the illumination status for the brake warning light.

Criteria: The brake warning light status does not change.

NOTE:

If the warning light illumination status changes when shaking the connectors and the wires of the skid control computer (brake actuator ASSY), check the terminals for poor connections.

NG → Repair or replacement of wiring harness or connector

OK

3	Diagnostic code check (CAN communication system)

(1) Check CAN communication system. (Refer to NW - 30)

Result

Result	Go to
No output	A
Output exists	B

B → Go to "CAN communication system (How to troubleshoot)" (Refer to NW - 30)

A

4	Check wiring harness and connector (+BS, IG1, GND1, GND2 terminals)

(1) Check the connector of the skid control computer (brake actuator ASSY) for a trouble such as poor engagement or disconnection.

Criteria: No trouble

(2) Turn IG OFF and disconnect the connector A5 from the skid control computer (brake actuator ASSY).

(3) Check the case and terminal of the connector for deformation and/or corrosion.

Criteria: No deformation or corrosion.

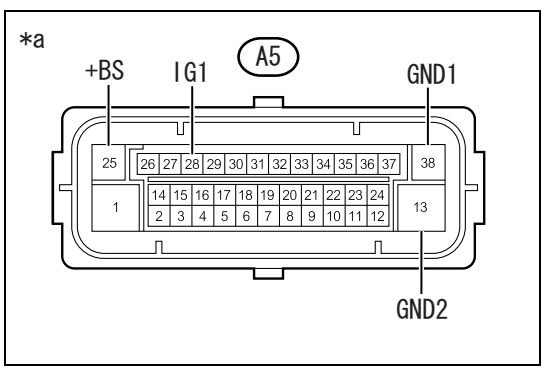

(4) Check the voltage and resistance between terminals.

Voltage

Inspection terminals	Inspection conditions	Standard value
A5-25(+BS) - chassis ground	Always	11 to 14V
A5-28(IG1) - chassis ground	IG ON	11 to 14V

Resistance

Inspection terminals	Inspection conditions	Standard value
A5-38(GND1) - chassis ground	Always	Less than 1 Ω

BC

Inspection terminals	Inspection conditions	Standard value
A5-13(GND2) - chassis ground	Always	Less than 1 Ω

Captions in illustration

*a	Front side of vehicle wiring harness connector (Skid control computer (brake actuator ASSY)- connector)

NOTE:
If there is a malfunction in GND1 and GND2 terminals, check the ground point for looseness.

NG → Repair or replacement of wiring harness or connector

OK

5 Parking brake switch ASSY check

(1) Check the parking brake switch ASSY. (Refer to PB - 27)

NG → Replacement of parking brake switch ASSY (Refer to PB - 26)

OK

6 Check wiring harness and connector (Main body ECM (network gateway computer) - parking brake switch ASSY)

(1) Turn IG OFF and disconnect the connector (3B) for the main body ECM (network gateway computer).
(2) Disconnect the connector, D31 for the parking brake switch ASSY.
(3) Measure the resistance between the terminals.

Resistance

Inspection terminals	Inspection conditions	Standard value
3B-24 - D31-1	Always	Less than 1 Ω
3B-24 - chassis ground	Always	10 k Ωor more

NG → Repair or replacement of wiring harness or connector

OK

BC

7 Brake master cylinder SUB-ASSY check (fluid level warning switch)

(1) With the brake fluid at a specified level, disconnect the connector (A59) for the fluid level warning switch (brake master cylinder reservoir SUB-ASSY), and check the brake warning light status.

Result

Result	Go to
The brake warning light does not go off.	A
The brake warning light goes off.	B

NOTE:
If the warning light goes off, the fluid level warning switch (brake master cylinder reservoir SUB-ASSY) is internally shorted.

B → Replacement of brake master cylinder SUB-ASSY (Refer to BR - 24)

A

8	Check wiring harness and connector (fluid level warning switch - combination meter ASSY and chassis ground)

(1) Turn the ignition switch to OFF, and then disconnect the connector (D7) for the combination meter ASSY.
(2) Measure the resistance between the terminals.
Resistance

Inspection terminals	Inspection conditions	Standard value
A59-1 - D7-17(LBL)	Always	Less than 1 Ω
A59-1 - chassis ground	Always	10 k Ωor more
A59-2 - chassis ground	Always	Less than 1 Ω

NG → Repair or replacement of wiring harness or connector

OK

To meter & gauge system (How to troubleshoot) (Refer to ME - 19)

The brake warning light does not illuminate

Description of functions
The skid control ECM is connected to the combination meter ASSY through the CAN communication.

Inspection steps
CAUTION:
When the skid control ECM (brake actuator ASSY) has been replaced, make sure to perform [VSC(VDC) Centering Mode]. (Refer to BC - 19)

1	Diagnostic code check (CAN communication system)

(1) Check CAN communication system. (Refer to NW - 30)
Result

Result	Go to
No output	A
Output exists	B

B → CAN communication system check (Refer to NW - 30)

A

BC

2	Brake warning light check

(1) Disconnect the skid control ECM connector.
(2) Turn the ignition switch to ON.
(3) Check that the brake warning light illuminates.
Criteria: Check that the brake warning light illuminates (for 3 seconds).

NOTE:
If this page is referenced while performing troubleshooting described in the symptom table, go back to the table and go to the next step before replacing parts. (Refer to BC - 7)

NG → Go to Step 3.

OK

Currently normal

3	Combination meter ASSY check

(1) Turn the ignition switch to OFF.
(2) Reconnect the skid control ECM connector.
(3) Start the engine.
(4) Using SSM4, display [Active Test] of the combination meter ASSY (meter CPU). (Refer to ME - 27)
(5) Check the combination meter ASSY.
Criteria: In response to the SSM4 operation, the brake warning light turns ON/OFF.

NOTE:
If this page is referenced while performing troubleshooting described in the symptom table, go back to the table and go to the next step before replacing parts. (Refer to BC - 7)

NG → Replacement of combination meter ASSY (Refer to ME - 63)

OK

Replacement of brake actuator ASSY (Refer to BC - 93)

BC

TRC OFF indicator light remains ON / TRC OFF indicator light does not illuminate

Description of functions

The skid control ECM is connected to the combination meter ASSY through the CAN communication. When the Vehicle stability control OFF switch is pressed, TRC is turned to OFF. When this switch is kept pressed, TRC and Vehicle stability control are turned to OFF. When TRC switches to OFF, the TRC OFF indicator light illuminates.

Wiring diagram

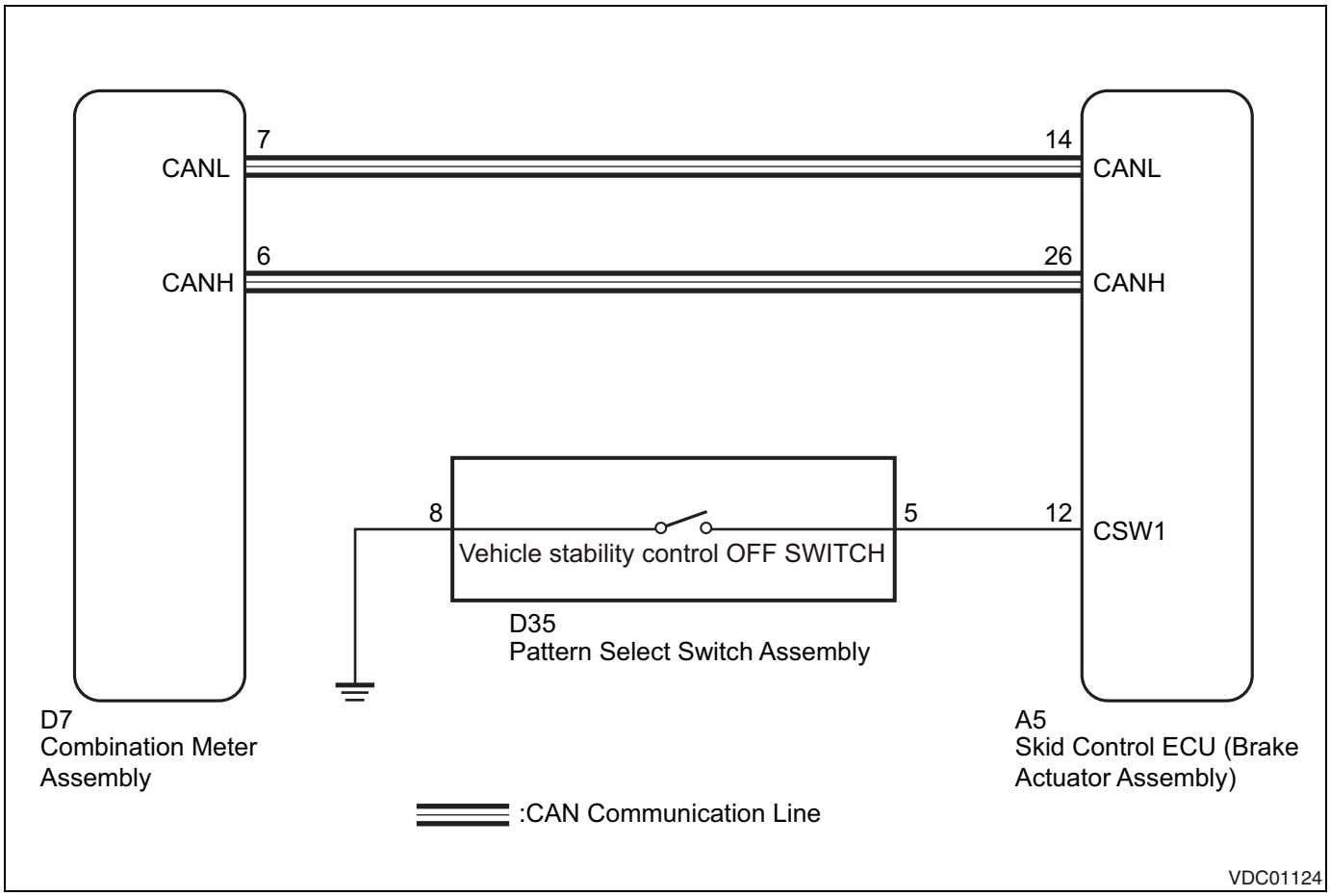

Inspection steps

CAUTION:

When the skid control ECM (brake actuator ASSY) has been replaced, make sure to perform [VSC(VDC) Centering Mode]. (Refer to BC - 15)

1	Diagnostic code check (CAN communication system)

(1) Check CAN communication system. (Refer to NW - 30)

Result

Result	Go to
No output	A
Output exists	B

B → Go to "CAN communication system (How to troubleshoot)" (Refer to NW - 30)

A

2	Inspection of skid control ECM connector connection

(1) Check if the skid control ECM connector is properly connected.

Criteria: The connector is properly connected.

NG → Properly connect the connector to the ECM.

OK

3	Check the battery.

(1) Check the battery voltage.
Standard voltage: 11 to 14 V

NG → Check or replace charging system components or battery (Refer to BH - 3)

OK

4	Data monitor inspection (TRC/VSC OFF mode)

(1) Connect the SSM4 to the DLC3.
(2) Start the engine.
(3) Using SSM4, check [Data monitor] of [TRC/VSC OFF Mode]. (Refer to BC - 20)

SSM4 screen: [Brake Control System] →[Data monitor]

Tester display	Measured item/Range	Normal condition	Notes for diagnosis
[TRC/VSC OFF Mode]	TRC/Vehicle stability control OFF Mode/Normal mode, TRC OFF mode, VSC OFF mode	Normal mode: Normal mode TRC OFF mode: TRC OFF mode VSC OFF mode: Vehicle stability control OFF mode	-

(4) Using SSM4, make sure that the state of the switch displayed in SSM4 changes depending on the vehicle stability control OFF switch operation.
Criteria: The display of the SSM4 changes depending on the operation of the vehicle stability control OFF switch.

NG → Go to Step 6.

OK

5	Combination meter ASSY check

(1) Using SSM4, display [Active Test] of the combination meter ASSY (meter CPU). (Refer to ME - 27)
(2) Check the combination meter ASSY.
Criteria: TRC OFF indicator light turns ON/OFF in response to SSM4 operation.

NOTE:
If this page is referred while performing troubleshooting described in the symptom table, go back to the table and go to the next step before replacing parts. (Refer to BC - 7)

NG → Replacement of combination meter ASSY (Refer to ME - 63)

OK

Replacement of brake actuator ASSY (Refer to BC - 93)

BC

6	Vehicle stability control OFF switch check

(1) Check the Vehicle stability control OFF switch. (Refer to BC - 111)

NG → Replacement of Vehicle stability control OFF switch (Refer to BC - 110)

OK

7	Harness and connector check (skid control ECM - Vehicle stability control OFF switch)

(1) Disconnect the skid control ECM connector.
(2) Measure the resistance according to the following table.

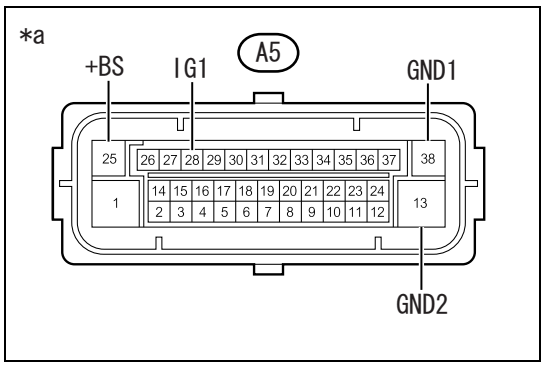

Normal resistance

Tester connection	Condition	Specific condition
A5-12 (CSW) - D35-5	Always	1 Ωor less
A5-12(CSW) - chassis ground	Always	10 kΩ or more
D35-8 - chassis ground	Always	1 Ωor less

Captions in illustration

*a	Front side of vehicle wiring harness connector (Skid control computer (brake actuator ASSY)- connector)

NOTE:
If this page is referenced while performing troubleshooting described in the symptom table, go back to the table and go to the next step before replacing parts. (Refer to BC - 7)

NG → Repair or replacement of wiring harness or connector

OK

Replacement of brake actuator ASSY (Refer to BC - 93)

Hill start assist ON indicator light remains ON / Hill start assist ON indicator light does not illuminate

Description of functions
The skid control ECM is connected to the combination meter ASSY through the CAN communication.
The default setting of the hill start assist function is OFF. This function is switched between ON and OFF by operating as follows. (The following is an example of switching from OFF to ON)

1. Park the vehicle on level and firm ground so that it becomes stable.
2. Make sure that the parking brake is securely applied.
3. Turn the ignition switch to LOCK (OFF).
4. Start the engine and make sure that the ABS warning light and VDC warning light are off.
5. Press and hold the vehicle stability control OFF switch. (Press and hold this switch until the vehicle stability control OFF indicator light illuminates and goes off (approx. 30 seconds).)
6. After the indicator light goes off, release the switch within 5 seconds.
7. Press the vehicle stability control OFF switch again within 2 seconds after releasing it.

8. Turn the ignition switch to LOCK (OFF). When the engine is restarted, the hill start assist indicator light illuminates and the hill start assist function is turned ON.
   NOTE:
   When the hill start assist function is turned from ON to OFF, the hill start assist indicator light remains ON after engine startup described in 4. After operation in 7, the hill start assist indicator light goes off first and is then turned on again. After operation in 8, the function is turned OFF.

Wiring diagram

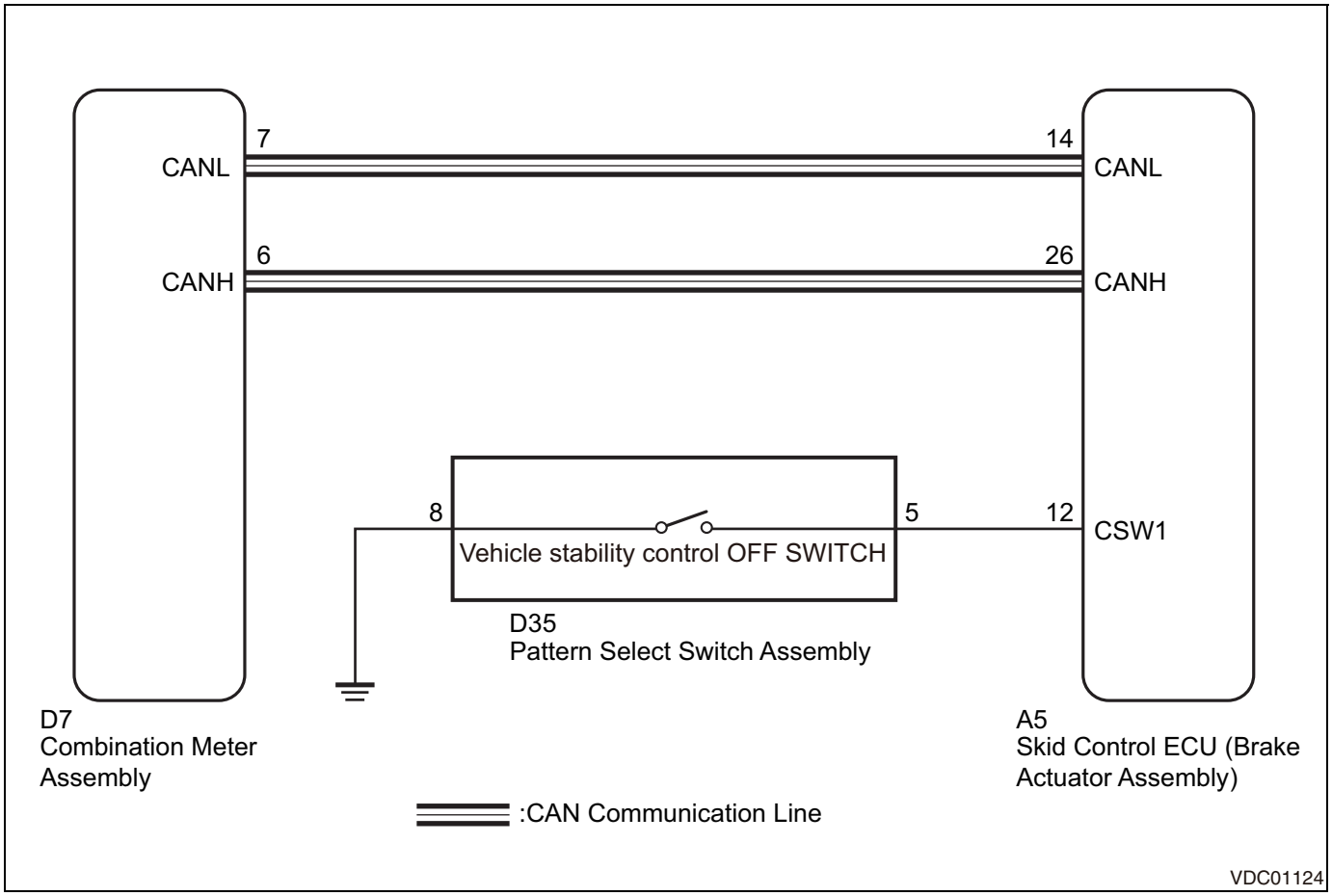

Inspection steps

CAUTION:

When the skid control ECM (brake actuator ASSY) has been replaced, make sure to perform [VSC(VDC) Centering Mode]. (Refer to BC - 15)

1	Diagnostic code output check (CAN communication system)

BC

(1) Check CAN communication system. (Refer to NW - 30)

Result

Result	Go to
No output	A
Output exists	B

B → Go to "CAN communication system (How to troubleshoot)" (Refer to NW - 30)

A

2	Inspection of skid control ECM connector connection

(1) Check if the skid control ECM connector is properly connected.
Criteria: The connector is properly connected.

NG → Properly connect the connector to the ECM.

OK ↓

3	Check the battery.

(1) Check the battery voltage.
Standard voltage: 11 to 14 V

NG → Check or replace charging system components or battery (Refer to BH - 3)

OK ↓

4	Data monitor inspection (TRC/VSC OFF mode)

(1) Connect the SSM4 to the DLC3.
(2) Start the engine.
(3) Using SSM4, check [Data monitor] of [TRC/VSC OFF Mode]. (Refer to BC - 20)

SSM4 screen: [Brake Control System] →[Data monitor]

Tester display	Measured item/Range	Normal condition	Notes for diagnosis
[TRC/VSC OFF Mode]	TRC/Vehicle stability control OFF Mode/Normal mode, TRC OFF mode, VSC OFF mode	Normal: Normal mode TRC OFF: TRC OFF mode VSC OFF: Vehicle stability control OFF mode	-

(4) Using SSM4, make sure that the state of the switch displayed in SSM4 changes depending on the vehicle stability control OFF switch operation. Furthermore, in the diagnosis of the hill start assist ON indicator light, make sure that TRC/VSC OFF mode has been changed by operating the switch.
Criteria: The display of the SSM4 changes depending on the operation of the vehicle stability control OFF switch.

NG → Go to Step 6.

OK ↓

5	Combination meter ASSY check

(1) Using SSM4, display [Active Test] of the combination meter ASSY (meter CPU). (Refer to ME - 27)
(2) Check the combination meter ASSY.
Criteria: The hill start assist ON indicator light turns ON/OFF in response to SSM4 operation.

NOTE:
If this page is referred while performing troubleshooting described in the symptom table, go back to the table and go to the next step before replacing parts. (Refer to BC - 7)

BC

NG → Replacement of combination meter ASSY (Refer to ME - 63)

OK

Replacement of brake actuator ASSY (Refer to BC - 93)

6	Vehicle stability control OFF switch check

(1) Check the Vehicle stability control OFF switch. (Refer to BC - 111)

NG → Replacement of Vehicle stability control OFF switch (Refer to BC - 110)

OK

7	Harness and connector check (skid control ECM - Vehicle stability control OFF switch)

(1) Disconnect the skid control ECM connector.
(2) Measure the resistance according to the following table.

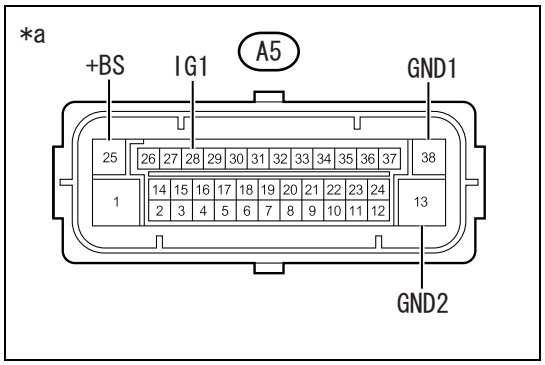

Normal resistance

Tester connection	Condition	Specific condition
A5-12 (CSW) - D35-5	Always	1 Ωor less
A5-12(CSW) - chassis ground	Always	10 kΩ or more
D35-8 - chassis ground	Always	1 Ωor less

Captions in illustration

*a	Front side of vehicle wiring harness connector (Skid control computer (brake actuator ASSY)- connector)

NOTE:
If this page is referenced while performing troubleshooting described in the symptom table, go back to the table and go to the next step before replacing parts. (Refer to BC - 7)

NG → Repair or replacement of wiring harness or connector

OK

Replacement of brake actuator ASSY (Refer to BC - 93)

Vehicle stability control OFF indicator light remains ON / Vehicle stability control OFF indicator light does not illuminate

Description of functions
The skid control ECM is connected to the combination meter ASSY through the CAN communication. When the Vehicle stability control OFF switch is pressed, TRC is turned to OFF. When this switch is kept pressed, TRC and Vehicle stability control are turned to OFF. When the vehicle stability control switches to OFF, the vehicle stability control OFF indicator light illuminates.

Wiring diagram

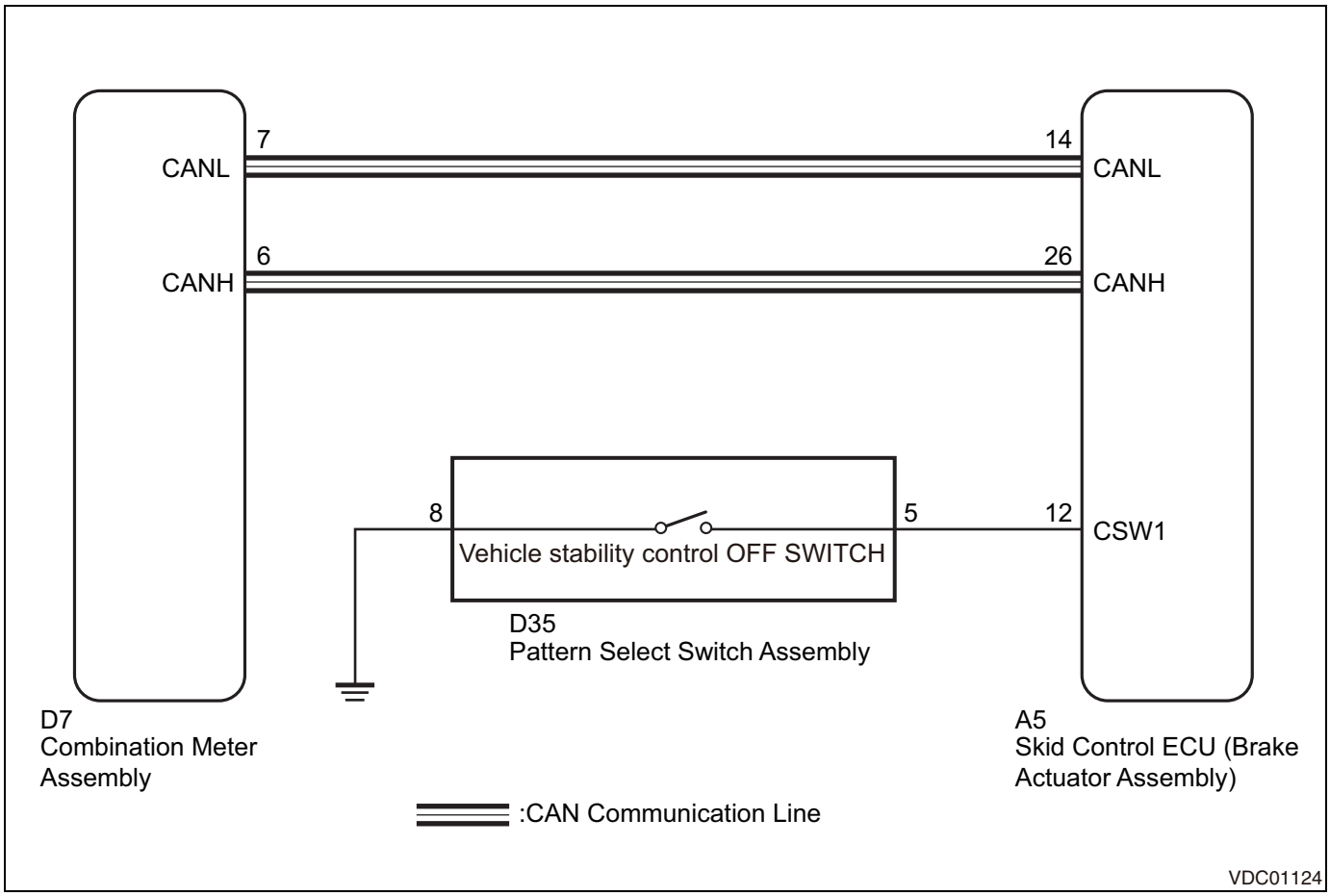

Inspection steps

CAUTION:

When the skid control ECM (brake actuator ASSY) has been replaced, make sure to perform [VSC(VDC) Centering Mode]. (Refer to BC - 15)

1	Diagnostic code output check (CAN communication system)

(1) Check CAN communication system. (Refer to NW - 30)

Result

Result	Go to
No output	A
Output exists	B

B → Go to "CAN communication system (How to troubleshoot)" (Refer to NW - 30)

A

2	Inspection of skid control ECM connector connection

(1) Check if the skid control ECM connector is properly connected.

Criteria: The connector is properly connected.

NG → Properly connect the connector to the ECM.

OK

3	Check the battery.

(1) Check the battery voltage.
Standard voltage: 11 to 14 V

NG → Check or replace charging system components or battery (Refer to BH - 3)

OK

4	Data monitor inspection (TRC/VSC OFF mode)

(1) Connect the SSM4 to the DLC3.
(2) Start the engine.
(3) Using SSM4, check [Data monitor] of [TRC/VSC OFF Mode]. (Refer to BC - 20)

SSM4 screen: [Brake Control System] →[Data monitor]

Tester display	Measured item/Range	Normal condition	Notes for diagnosis
[TRC/VSC OFF Mode]	TRC/Vehicle stability control OFF Mode/Normal mode, TRC OFF mode, VSC OFF mode	Normal: Normal mode TRC OFF: TRC OFF mode VSC OFF: Vehicle stability control OFF mode	-

(4) Using SSM4, make sure that the state of the switch displayed in SSM4 changes depending on the vehicle stability control OFF switch operation.
Criteria: The display of the SSM4 changes depending on the operation of the vehicle stability control OFF switch.

NG → Go to Step 6.

OK

5	Combination meter ASSY check

(1) Using SSM4, display [Active Test] of the combination meter ASSY (meter CPU). (Refer to ME - 27)
(2) Check the combination meter ASSY.
Criteria: Vehicle stability control OFF indicator light is turned ON or OFF depending on the SSM4 operation.

NOTE:
If this page is referred while performing troubleshooting described in the symptom table, go back to the table and go to the next step before replacing parts. (Refer to BC - 7)

NG → Replacement of combination meter ASSY (Refer to ME - 63)

OK

Replacement of brake actuator ASSY (Refer to BC - 93)

BC

6	Vehicle stability control OFF switch check

(1) Check the Vehicle stability control OFF switch. (Refer to BC - 111)

NG → Replacement of Vehicle stability control OFF switch (Refer to BC - 110)

OK

7	Harness and connector check (skid control ECM - Vehicle stability control OFF switch)

(1) Disconnect the skid control ECM connector.
(2) Measure the resistance according to the following table.

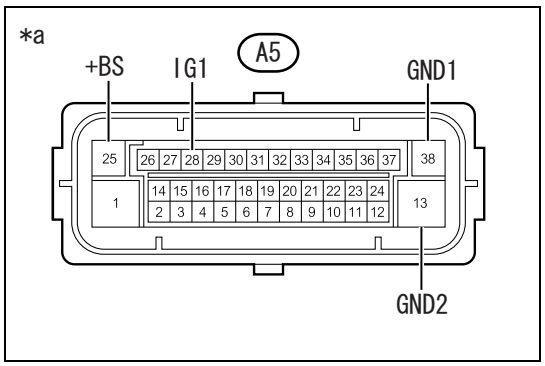

Normal resistance

Tester connection	Condition	Specific condition
A5-12 (CSW) - D35-5	Always	1 Ωor less
A5-12(CSW) - chassis ground	Always	10 kΩ or more
D35-8 - chassis ground	Always	1 Ωor less

Captions in illustration

*a	Front side of vehicle wiring harness connector (Skid control computer (brake actuator ASSY)- connector)

NOTE:
If this page is referenced while performing troubleshooting described in the symptom table, go back to the table and go to the next step before replacing parts. (Refer to BC - 7)

NG → Repair or replacement of wiring harness or connector

OK

Replacement of brake actuator ASSY (Refer to BC - 93)

TRACK indicator light remains ON / TRACK indicator light does not illuminate

Description of functions

The skid control ECM is connected to the combination meter ASSY through the CAN communication. When TRACK switch is pressed for 1 second or more, the system is switched from normal mode to truck mode. When the TRACK switch is pressed in truck mode, the system switches to normal mode.

Wiring diagram

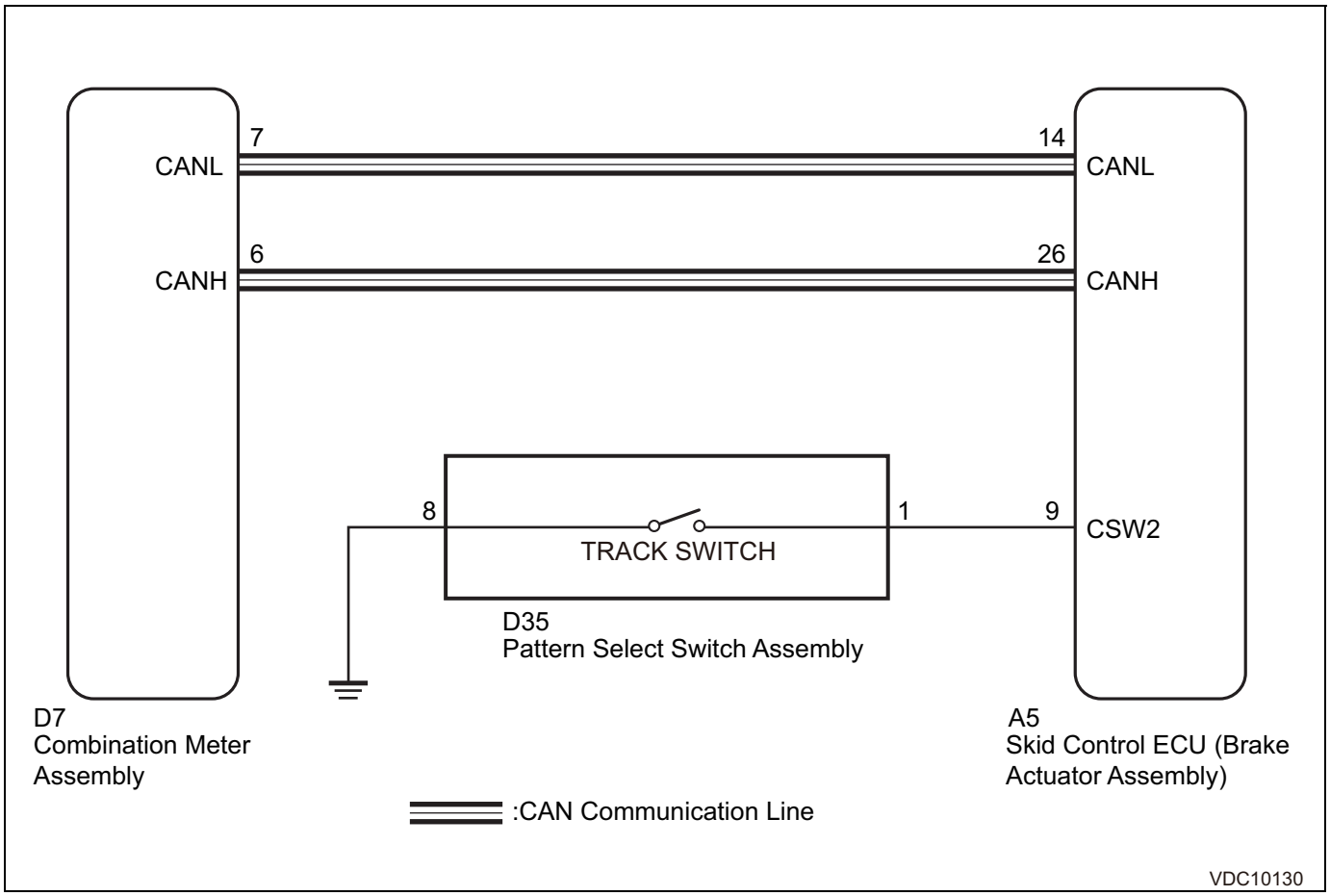

Inspection steps

CAUTION:

When the skid control ECM (brake actuator ASSY) has been replaced, make sure to perform [VSC(VDC) Centering Mode]. (Refer to BC - 15)

1	Diagnostic code output check (CAN communication system)

(1) Check CAN communication system. (Refer to NW - 30)

Result

Result	Go to
No output	A
Output exists	B

B → Go to "CAN communication system (How to troubleshoot)" (Refer to NW - 30)

A

2	Inspection of skid control ECM connector connection

(1) Check if the skid control ECM connector is properly connected.

Criteria: The connector is properly connected.

NG → Properly connect the connector to the ECM.

OK

3	Check the battery.

(1) Check the battery voltage.
Standard voltage: 11 to 14 V

NG → Check or replace charging system components or battery (Refer to BH - 3)

OK

4	Data monitor check (TRACK mode)

(1) Connect the SSM4 to the DLC3.
(2) Start the engine.
(3) Using SSM4, check [Data monitor] of [TRACK Mode]. (Refer to BC - 20)

SSM4 screen: [Brake Control System] →[Data monitor]

Tester display	Measured item/Range	Normal condition	Notes for diagnosis
TRACK mode	TRACK mode / Normal or TRACK	Normal: Normal mode TRACK: TRACK mode	-

(4) Using SSM4, make sure that the state of the switch displayed in SSM4 changes depending on the TRACK switch operation.
Criteria: The display of the SSM4 changes depending on the operation of TRACK switch.

NG → Go to Step 6.

OK

5	Combination meter ASSY check

(1) Using SSM4, display [Active Test] of the combination meter ASSY (meter CPU). (Refer to ME - 27)
(2) Check the combination meter ASSY.
Criteria: TRACK indicator light turns ON/OFF in response to SSM4 operation.

NOTE:
If this page is referenced while performing troubleshooting described in the symptom table, go back to the table and go to the next step before replacing parts. (Refer to BC - 7)

NG → Replacement of combination meter ASSY (Refer to ME - 63)

OK

Replacement of brake actuator ASSY (Refer to BC - 93)

BC

6	TRACK switch check

(1) Check the TRACK switch. (Refer to BC - 111)

NG → Replacement of TRACK switch (Refer to BC - 110)

OK

7	Harness and connector check (skid control ECM - TRACK switch)

(1) Disconnect the skid control ECM connector.

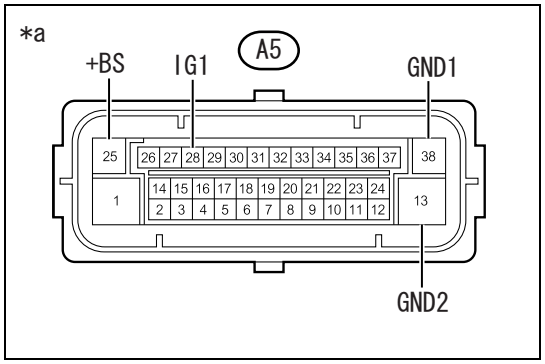

(2) Measure the resistance according to the following table.
Normal resistance

Tester connection	Condition	Specific condition
A5-9 (CSW) - D35-1	Always	1 Ωor less
A5-9(CSW) - chassis ground	Always	10 kΩ or more
D35-8 - chassis ground	Always	1 Ωor less

Captions in illustration

*a	Front side of vehicle wiring harness connector (Skid control computer (brake actuator ASSY)- connector)

NOTE:
If this page is referenced while performing troubleshooting described in the symptom table, go back to the table and go to the next step before replacing parts. (Refer to BC - 7)

NG → Repair or replacement of wiring harness or connector

OK

Replacement of brake actuator ASSY (Refer to BC - 93)

Slip indicator light remains ON

Description of functions

The skid control ECM is connected to the combination meter ASSY through the CAN communication. When Vehicle stability control and/or TRC is active, the slip indicator light flashes. When a malfunction is detected, the slip indicator light illuminates and the driver is warned of the condition.

BC

Wiring diagram

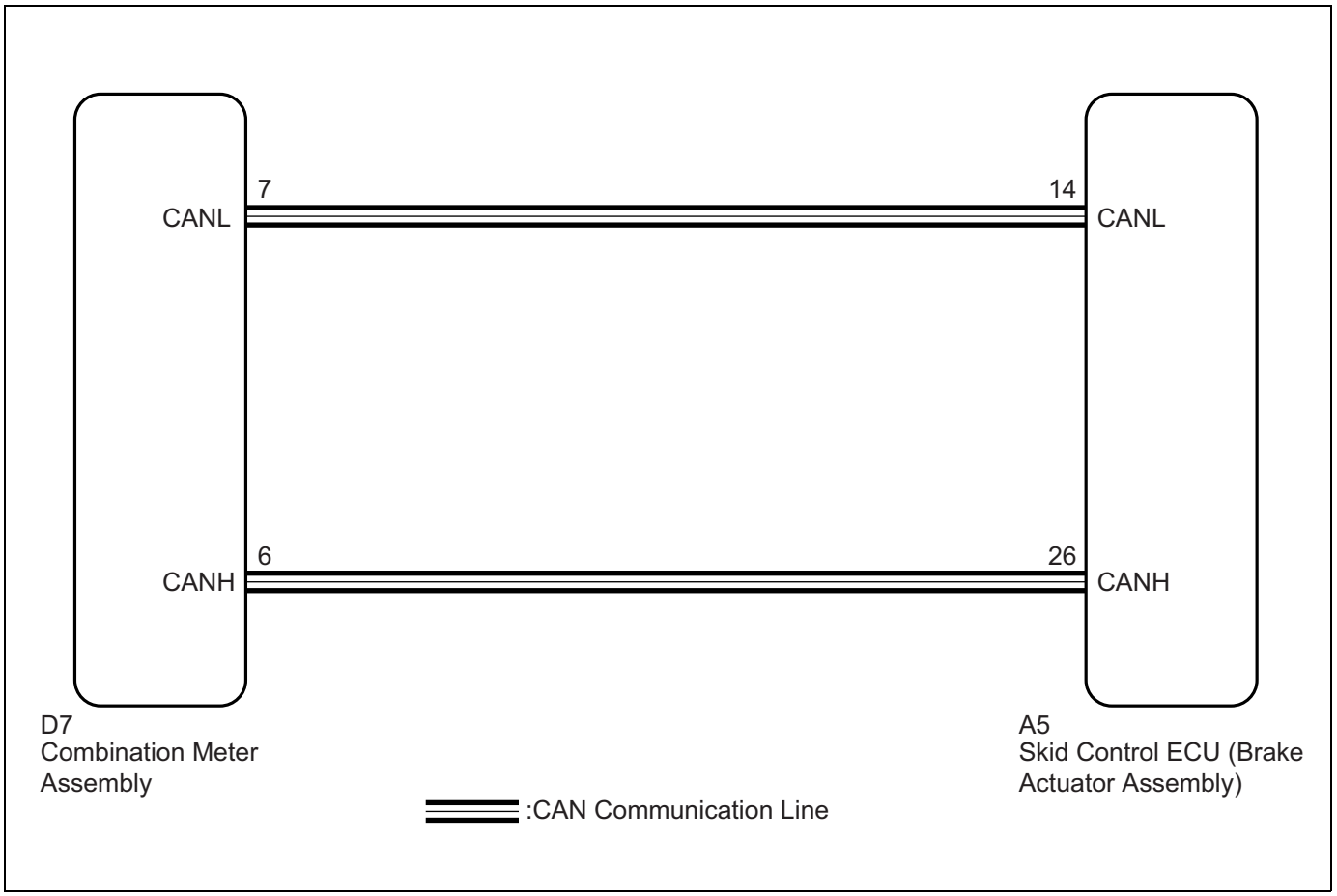

Inspection steps

CAUTION:

When the skid control ECM (brake actuator ASSY) has been replaced, make sure to perform [VSC(VDC) Centering Mode]. (Refer to BC - 15)

1	Diagnostic code output check (CAN communication system)

(1) Check CAN communication system. (Refer to NW - 30)

Result

Result	Go to
No output	A
Output exists	B

B → Go to "CAN communication system (How to troubleshoot)" (Refer to NW - 30)

A

2	Inspection of skid control ECM connector connection

(1) Check if the skid control ECM connector is properly connected.

Criteria: The connector is properly connected.

NG → Properly connect the connector to the ECM.

OK

3	Check the battery.

(1) Check the battery voltage.
Standard voltage: 11 to 14 V

NG → Check or replace charging system components or battery (Refer to BH - 3)

OK

4	Combination meter ASSY check

(1) Start the engine.
(2) Using SSM4, display [Active Test] of the combination meter ASSY (meter CPU). (Refer to ME - 27)
(3) Check the combination meter ASSY.
Criteria: In response to the SSM4 operation, the slip indicator light turns ON/OFF.

NOTE:
If this page is referenced while performing troubleshooting described in the symptom table, go back to the table and go to the next step before replacing parts. (Refer to BC - 7)

NG → Replacement of combination meter ASSY (Refer to ME - 63)

OK

Replacement of brake actuator ASSY (Refer to BC - 93)

The slip indicator light does not illuminate

Description of functions
The skid control ECM is connected to the combination meter ASSY through the CAN communication.

Inspection steps
CAUTION:
When the skid control ECM (brake actuator ASSY) has been replaced, make sure to perform [VSC(VDC) Centering Mode]. (Refer to BC - 15)

BC

1	Diagnostic code output check (CAN communication system)

(1) Check CAN communication system. (Refer to NW - 30)
Result

Result	Go to
No output	A
Output exists	B

B → Go to "CAN communication system (How to troubleshoot)" (Refer to NW - 30)

A

2	Combination meter ASSY check

(1) Turn the ignition switch to OFF.
(2) Using SSM4, display [Active Test] of the combination meter ASSY (meter CPU). (Refer to ME - 27)
(3) Check the combination meter ASSY.
Criteria: In response to the SSM4 operation, the slip indicator light turns ON/OFF.

NOTE:
If this page is referenced while performing troubleshooting described in the symptom table, go back to the table and go to the next step before replacing parts. (Refer to BC - 7)

NG → Replacement of combination meter ASSY (Refer to ME - 63)

OK

Replacement of brake actuator ASSY (Refer to BC - 93)

Brake actuator ASSY

Exploded view

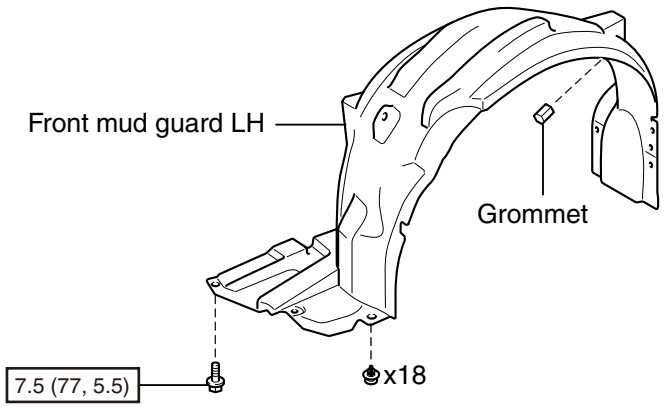

N•m {kgf•cm, ft•lbf} : Tightening torque

VDC01118

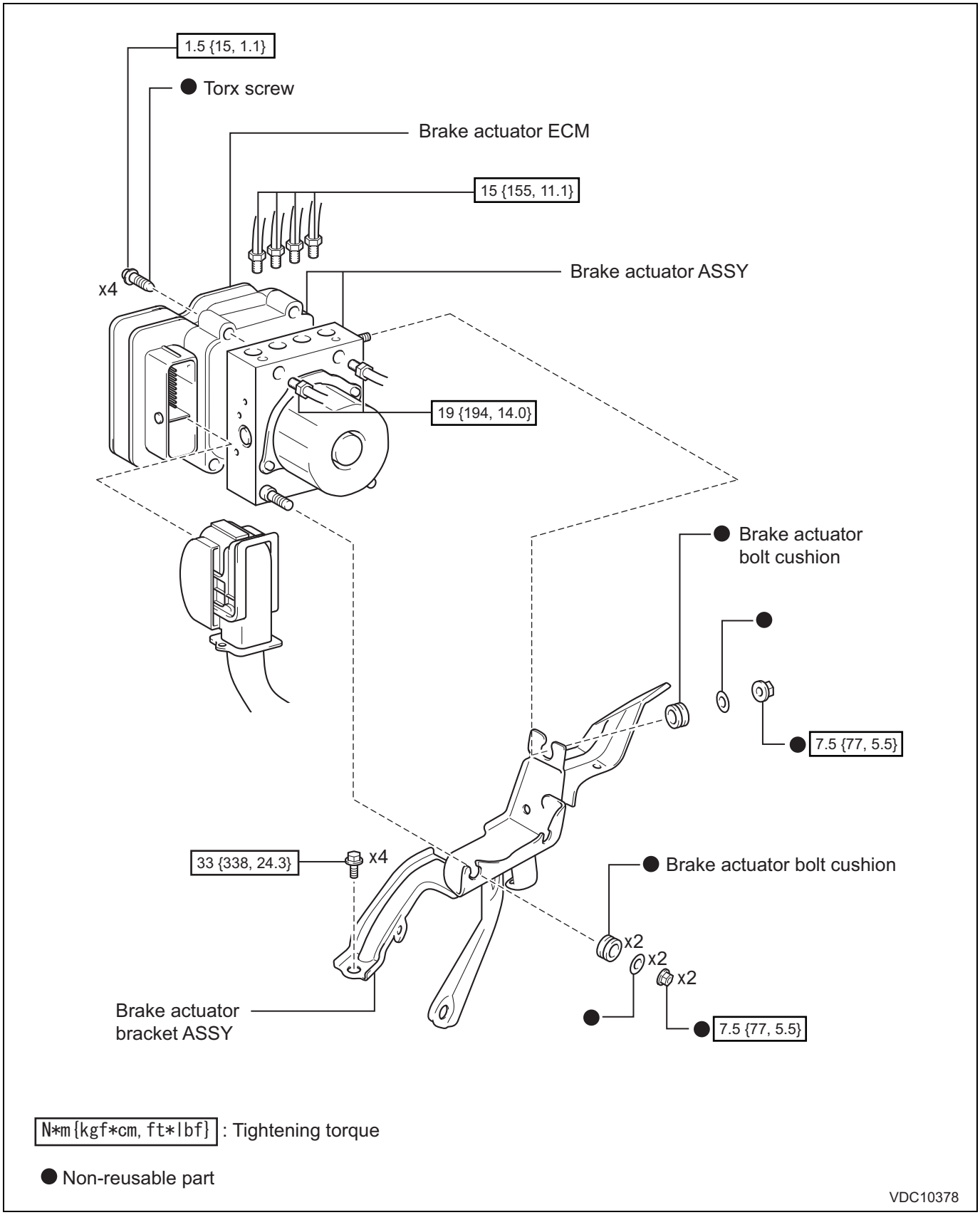

BC

Removal

1. Precautions for brake pipe work
   (Refer to BR - 5)

2. Draining of brake fluid
   CAUTION:
   Do not let brake fluid come into contact with the painted surface. If it happens, wash it out immediately.
3. Removal of front tire LH
4. Removal of front mud guard LH (Refer to WW - 26)

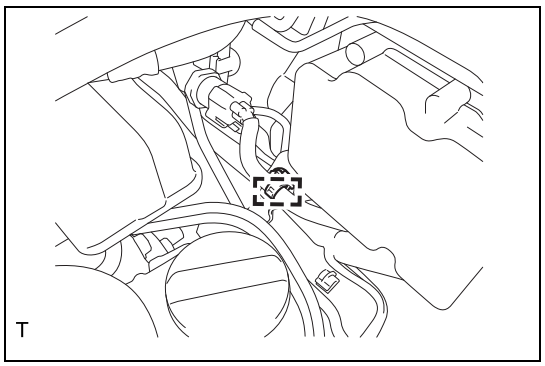

5. Removal of brake actuator ASSY W/bracket
   (1) Disconnect the harness clamp from the bracket.

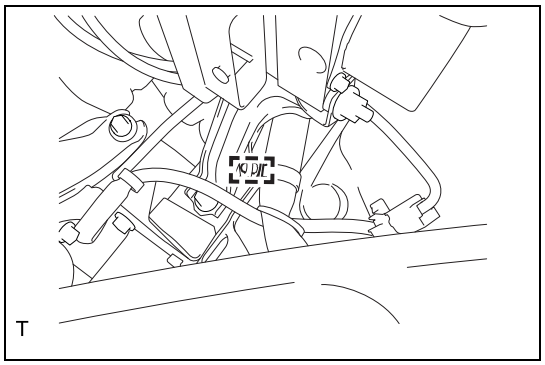

(2) Disconnect the harness clamp from the bracket.

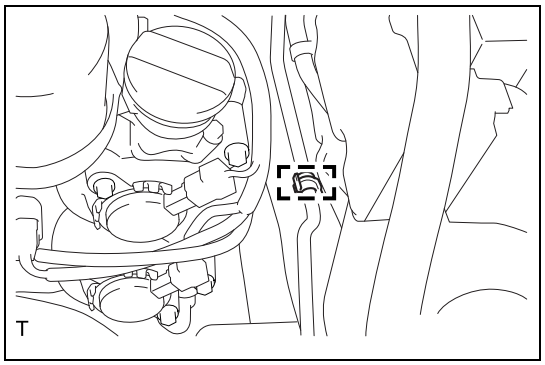

(3) Disconnect the cooler pipe from the clamp.

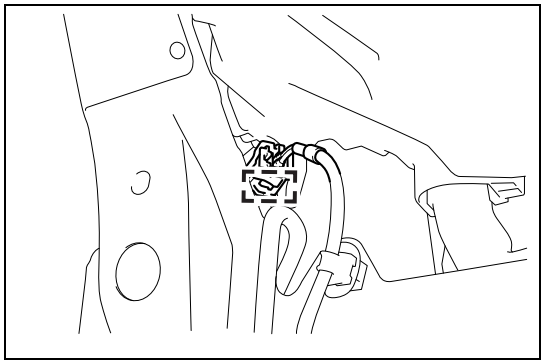

(4) Disconnect the clamp from the wiring harness of the speed sensor FR LH.

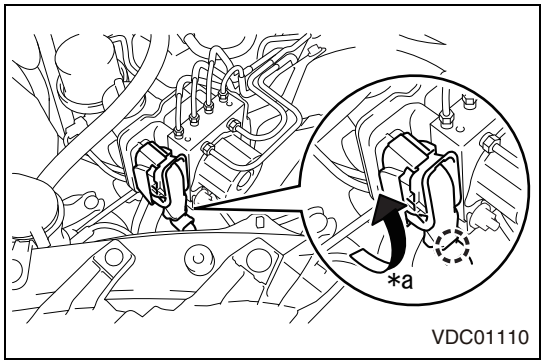

(5) Press the claw on the vehicle wiring harness connector to remove the engaging part, and then rotate the lock lever upward to unlock.

Captions in illustration

*a	Rotate it.

(6) Disconnect the vehicle wiring harness connector from the brake actuator ASSY.

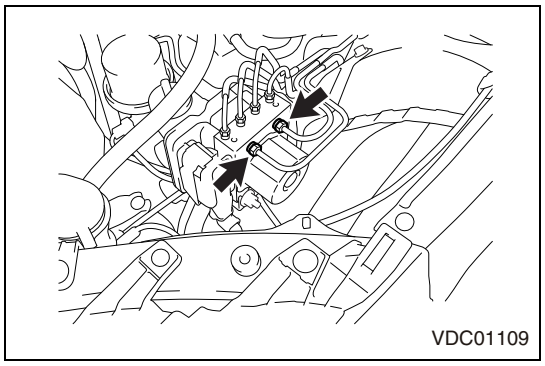

(7) Using a flare-nut wrench, disconnect 2 brake tubes.
CAUTION:
Protect the connector surface from contact with brake fluid.

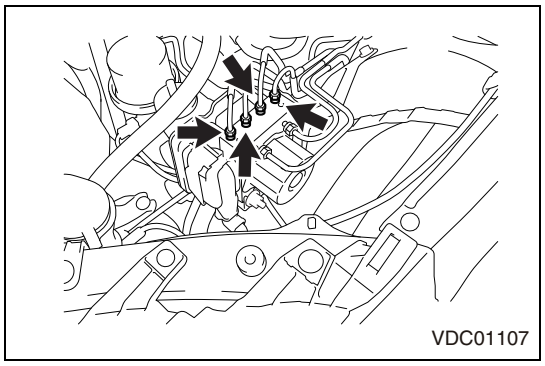

(8) Using a flare-nut wrench, disconnect 4 brake tubes.
CAUTION:
Protect the connector surface from contact with brake fluid.

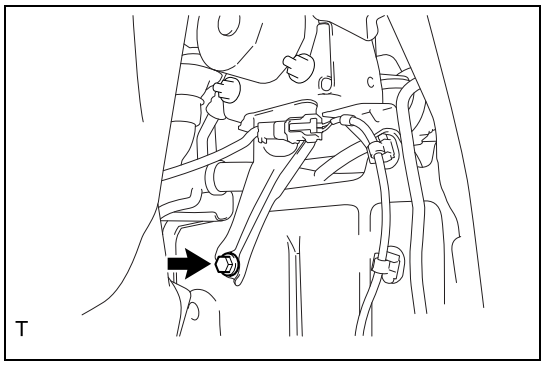

(9) Remove the bolt from the brake actuator ASSY W/bracket.

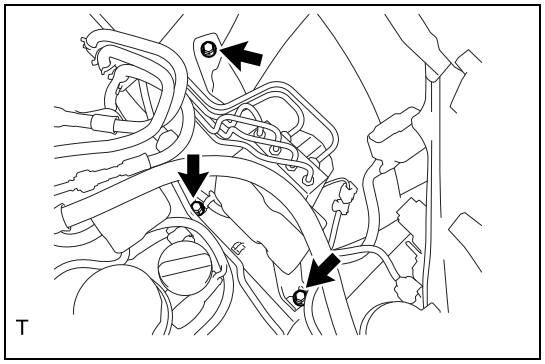

(10) Remove 3 bolts from the brake actuator ASSY W/bracket.
(11) Remove the brake actuator ASSY W/bracket from the body.
CAUTION:
Do not bend or damage the brake tubes.

Disassembly

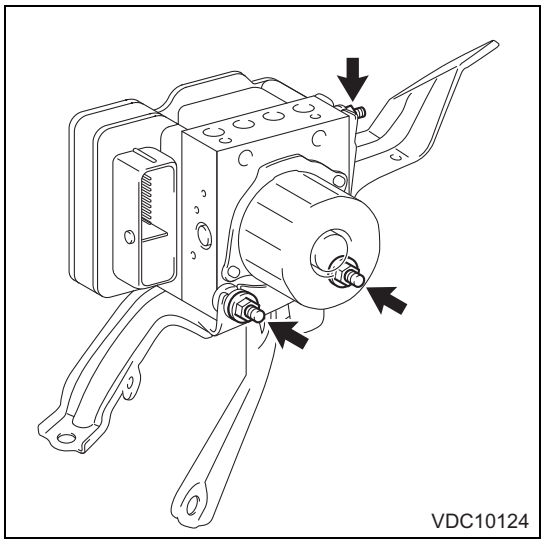

1. Removal of brake actuator bracket ASSY
   (1) Remove 3 nuts and washers and then remove the brake actuator bracket ASSY from the brake actuator ASSY.

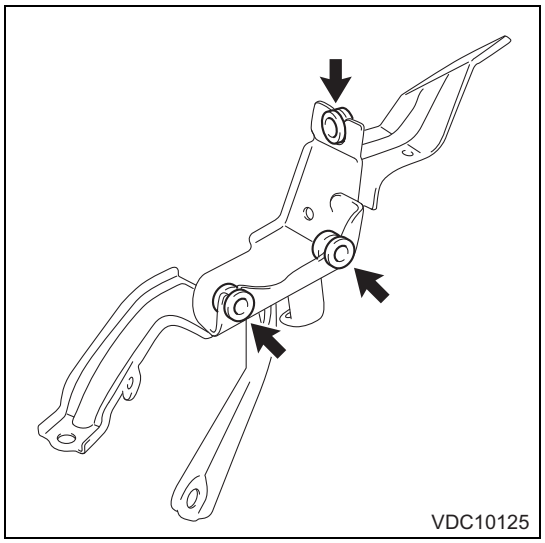

2. Removal of brake actuator bolt cushion
   (1) Remove 3 brake actuator bolt cushions from the brake actuator bracket ASSY.

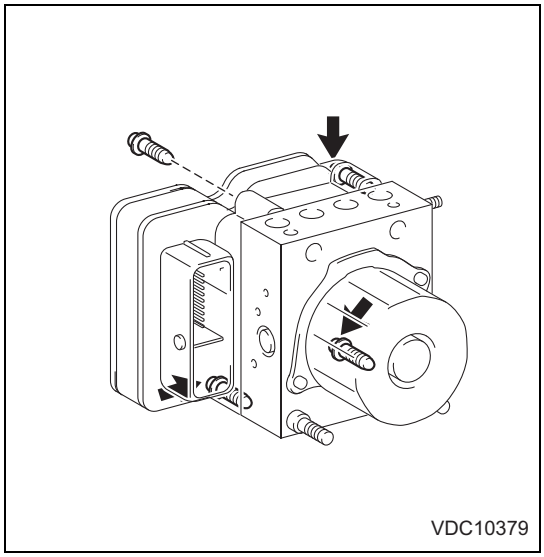

3. Removal of brake actuator ECM
   (1) Remove the torque screw.
   (2) Remove the brake actuator ECM from the brake actuator ASSY.

Assembly

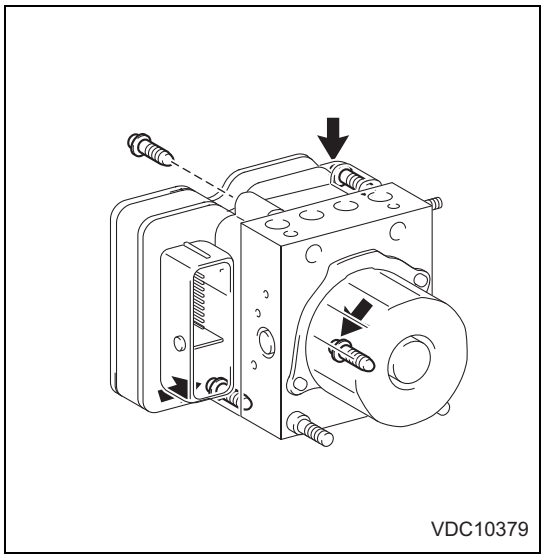

1. Installation of brake actuator ECM
   (1) Using 4 new torque screws, install the brake actuator ECM to the brake actuator ASSY.
   Standard value:T=1.5N·m {15kgf·cm} {1.1 ft·lbf}

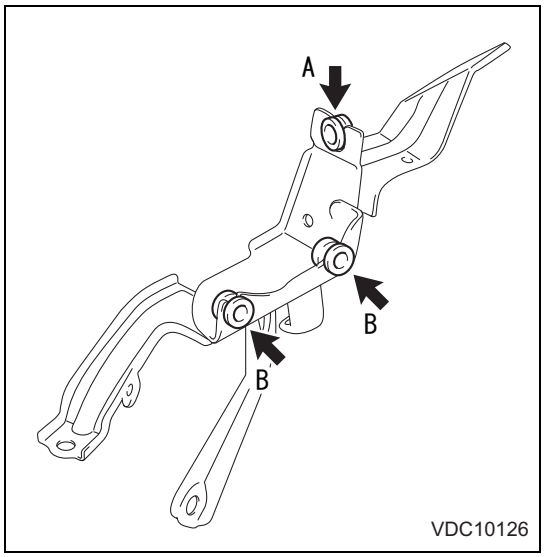

2. Installation of brake actuator bolt cushion
   (1) Install 3 new brake actuator bolt cushions (A and B) to the actuator ASSY.

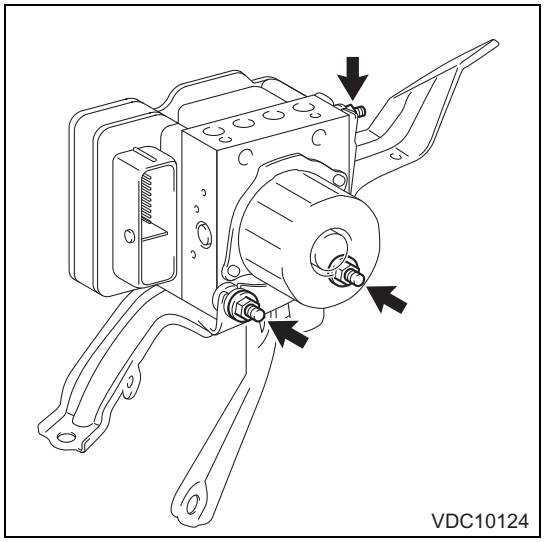
VDC10124

3. Installation of brake actuator bracket ASSY
   (1) With 3 new nuts and 3 new washers, install the brake actuator bracket ASSY to the brake actuator ASSY.
   Standard value:T=7.5N·m {77kgf·cm} {5.5ft·lbf}
   CAUTION:
   New brake actuator ASSY is filled with brake fluid. Therefore, do not remove the hole plug until the brake tube is connected.

Installation

1. Installation of brake actuator ASSY W/bracket
   (1) With 4 bolts, install the brake actuator ASSY W/bracket to the body.
   CAUTION:
   Do not bend or damage the brake tubes.
   Standard value:T=33N·m {338kgf·cm} {24.3ft·lbf}
   (2) Connect the vehicle wiring harness to the brake actuator ASSY.

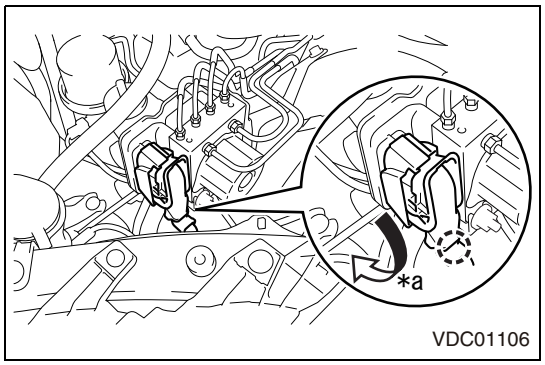

VDC01106

   (3) Rotate the lock lever for the vehicle wiring harness downward, and engage the claw of the vehicle wiring harness connector to lock it.
   CAUTION:
   - Before connecting the vehicle wiring harness, make sure there is no foreign matter is on the connector surface.
   - After connecting the vehicle wiring harness, make sure that the lock lever is securely locked.

*a	Rotate it.

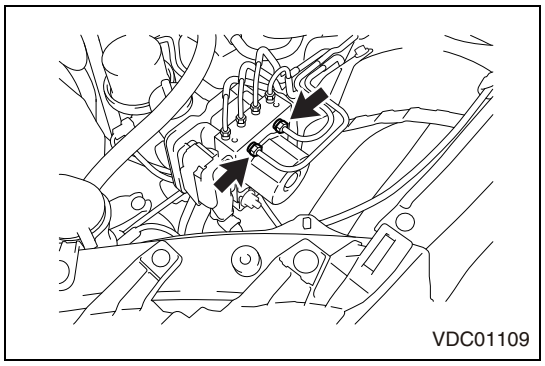
VDC01109

   (4) Using a flare-nut wrench, connect 2 brake tubes to the brake actuator ASSY.
   Standard value:T=19N·m {194kgf·cm} {14.0ft·lbf}

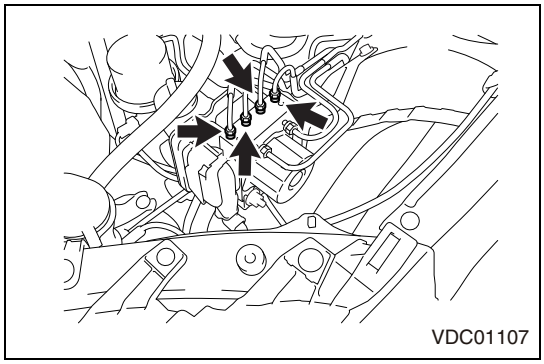
VDC01107

(5) Using a flare-nut wrench, connect 4 brake tubes to the brake actuator ASSY.
Standard value:T=15N·m {155kgf·cm} {11.1ft·lbf}

(6) Attach the clamp to the wiring harness of the speed sensor FR LH.
(7) Install the cooler pipe to the clamp.
(8) Attach 2 harness clamps.

2. Brake fluid refill (Refer to BR - 8)
3. Air bleeding of brake system (Refer to BR - 8)
4. Brake fluid leak check
5. Brake fluid level check (Refer to BR - 12)
6. Installation of front mud guard LH (Refer to WW - 28)
7. Installation of front tire LH
Standard value:T=120N·m {1224kgf·cm} {88.5ft·lbf}
8. VDC sensor mid point setting (Refer to BC - 15)

Front speed sensor

Exploded view

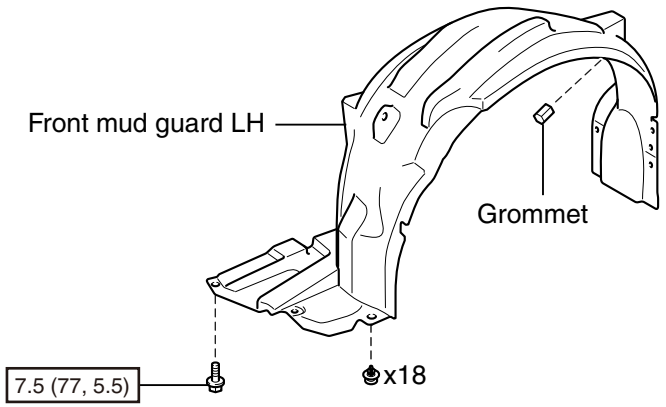

N•m {kgf•cm, ft•lbf} : Tightening torque

VDC01118

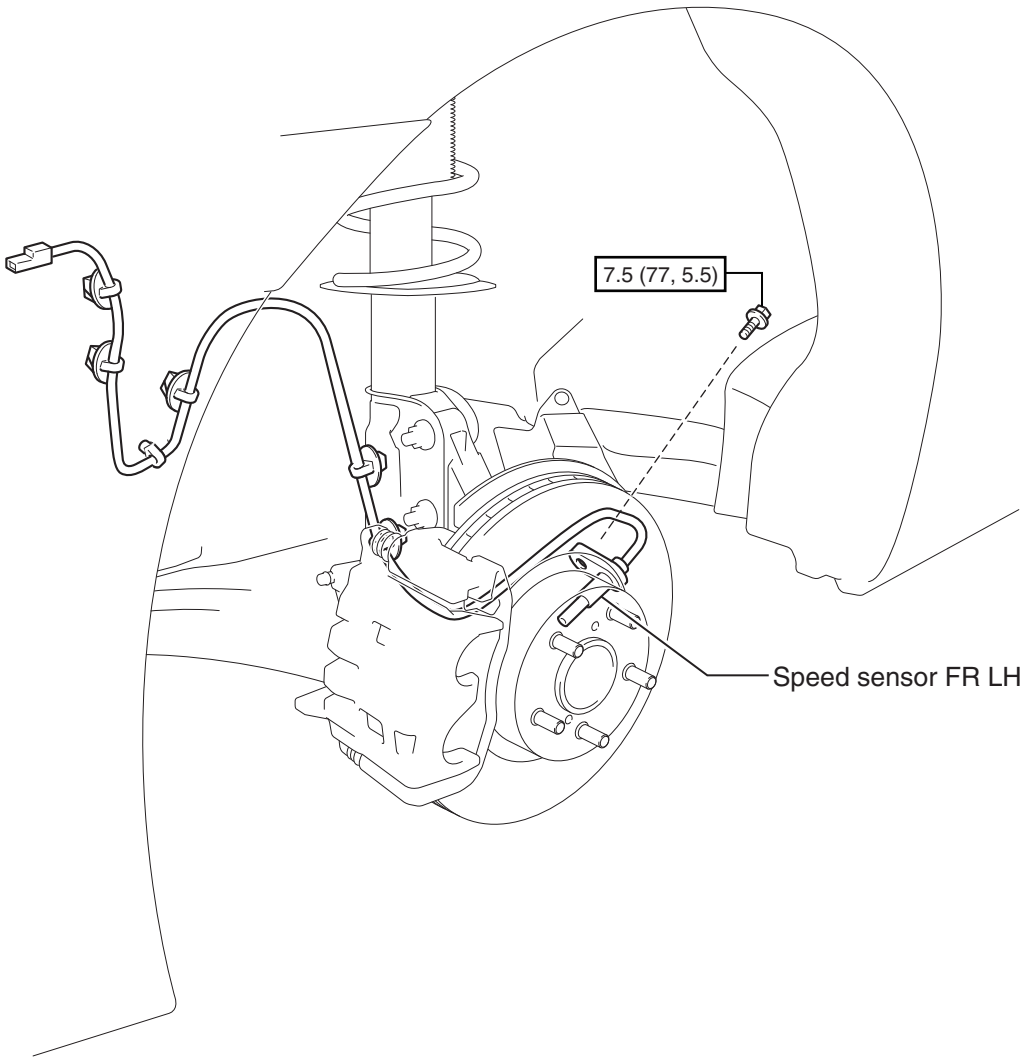

N•m {kgf•cm, ft•lbf} : Tightening torque

VDC01103

BC

Removal

NOTE:

The following procedure is for LH side. Perform the same procedures both for the LH side and RH side, unless otherwise specified.

1. Removal of front tire
2. Removal of front mud guard LH (Refer to WW - 26)

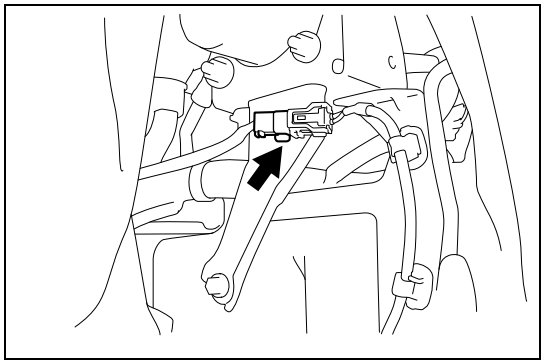

3. Removal of speed sensor FR LH
   (1) Disconnect the connector.
   (2) Disconnect 6 clamps.

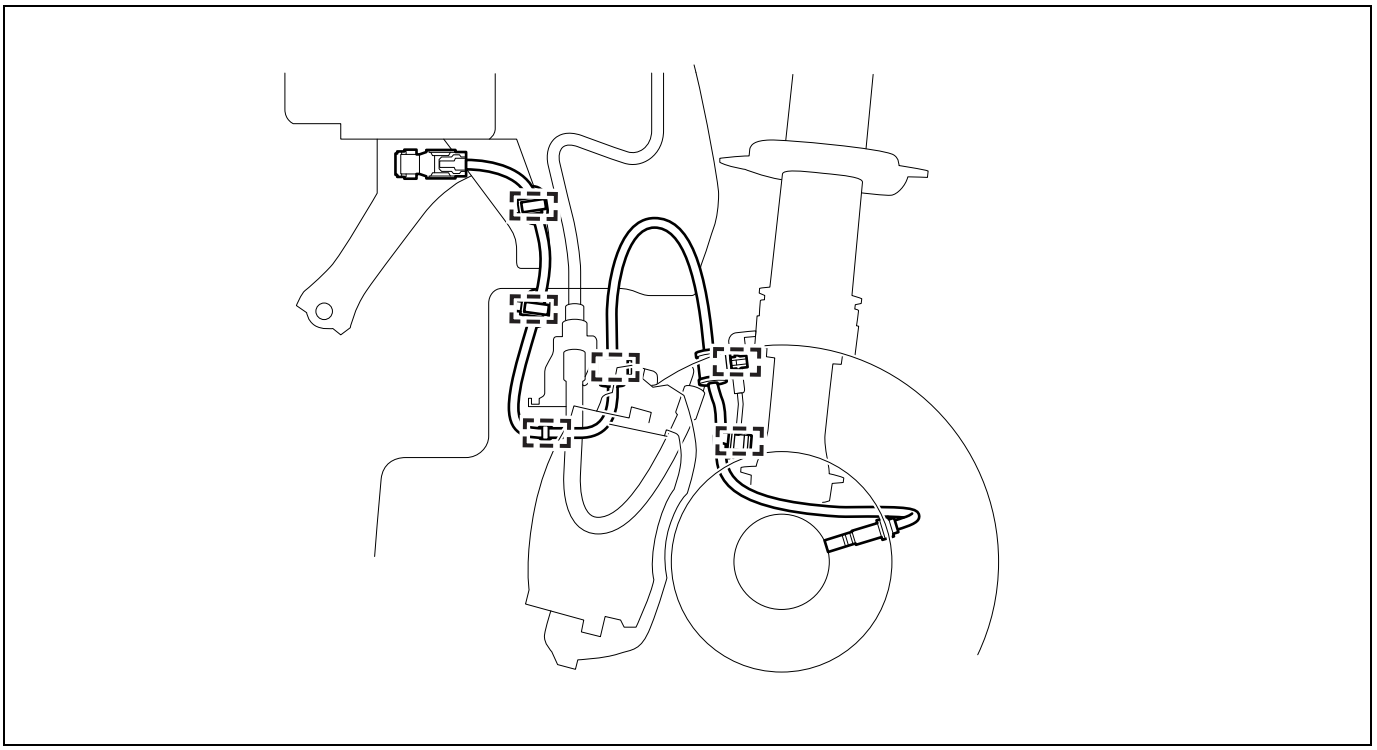

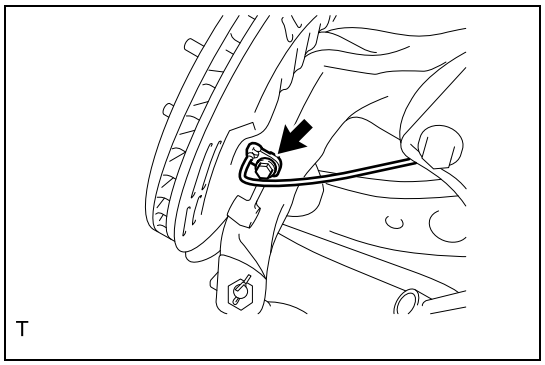

(3) Remove the bolt and the speed sensor FR LH.
CAUTION:
Do not let foreign matter stick to the installation part and the tip of the speed sensor FR LH.

BC

Installation

NOTE:

The following procedure is for LH side. Perform the same procedures both for the LH side and RH side, unless otherwise specified.

1. Installation of speed sensor FR LH
   (1) Install the speed sensor FR LH with bolt.
   CAUTION:
   Do not let foreign matter stick to the installation part and the tip of the speed sensor FR LH.
   Standard value:T=7.5N·m {77kgf·cm} {5.5ft·lbf}
   (2) Attach 6 clamps.

CAUTION:
Do not attach the speed sensor FR LH with the sensor twisted.

(3) Connect the connector for the speed sensor FR LH.

2. Installation of front mud guard LH (Refer to WW - 28)
3. Installation of front tire
   Standard value:T=120N·m {1224kgf·cm} {88.5ft·lbf}

Rear speed sensor

Exploded view

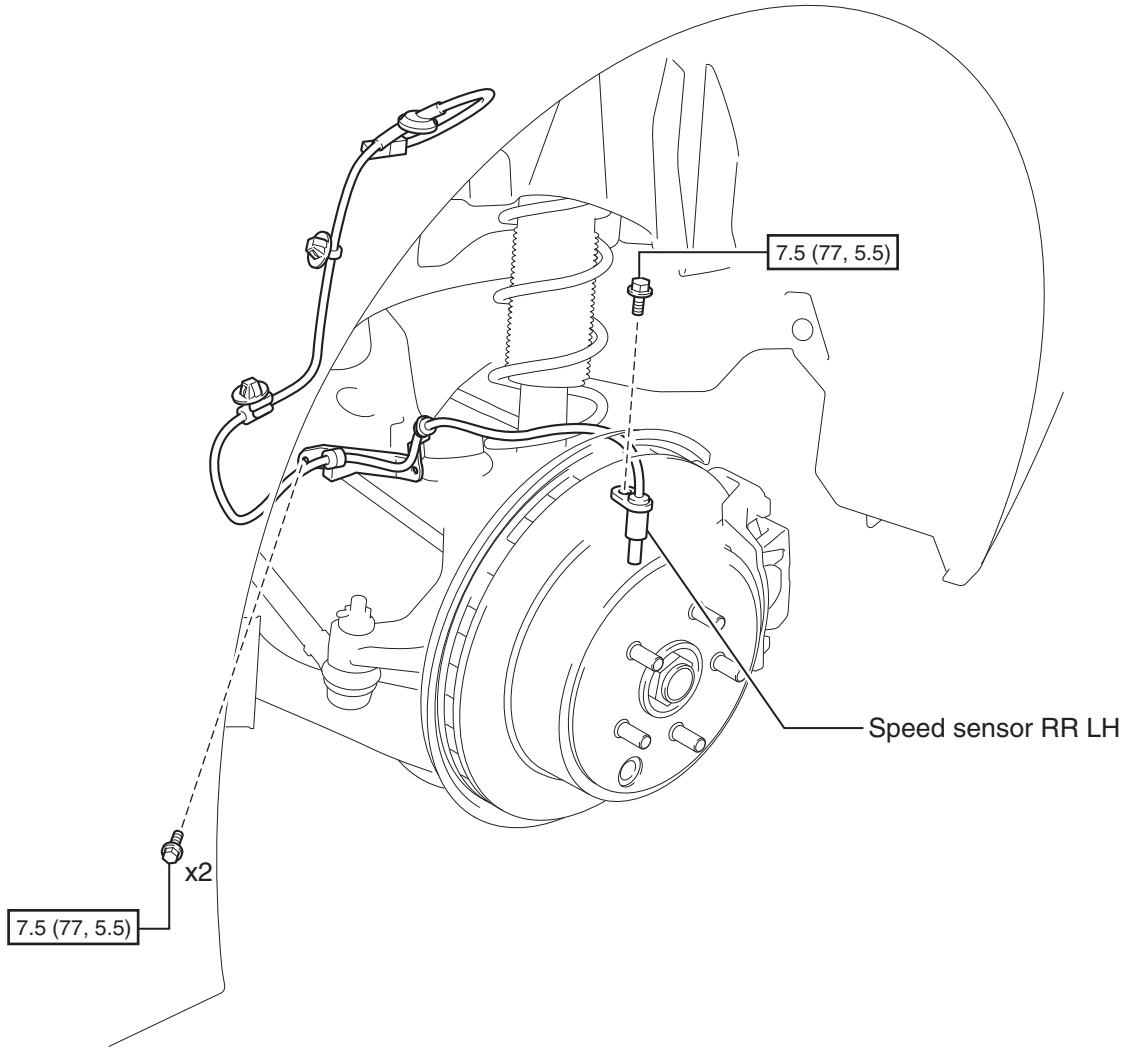

BC

Removal

NOTE:

The following procedure is for LH side. Perform the same procedures for the RH and LH side.

1. Removal of rear tire
2. Removal of speed sensor RR LH
   (1) Remove the trunk floor mat.

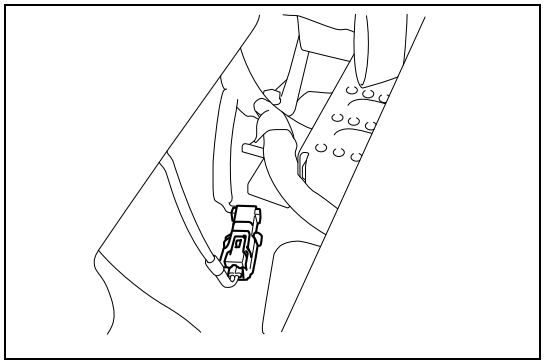

(2) Disconnect the speed sensor RR LH connectors in the vehicle.

(3) Disconnect the grommet and 2 harness clamps from the rear wheel housing.

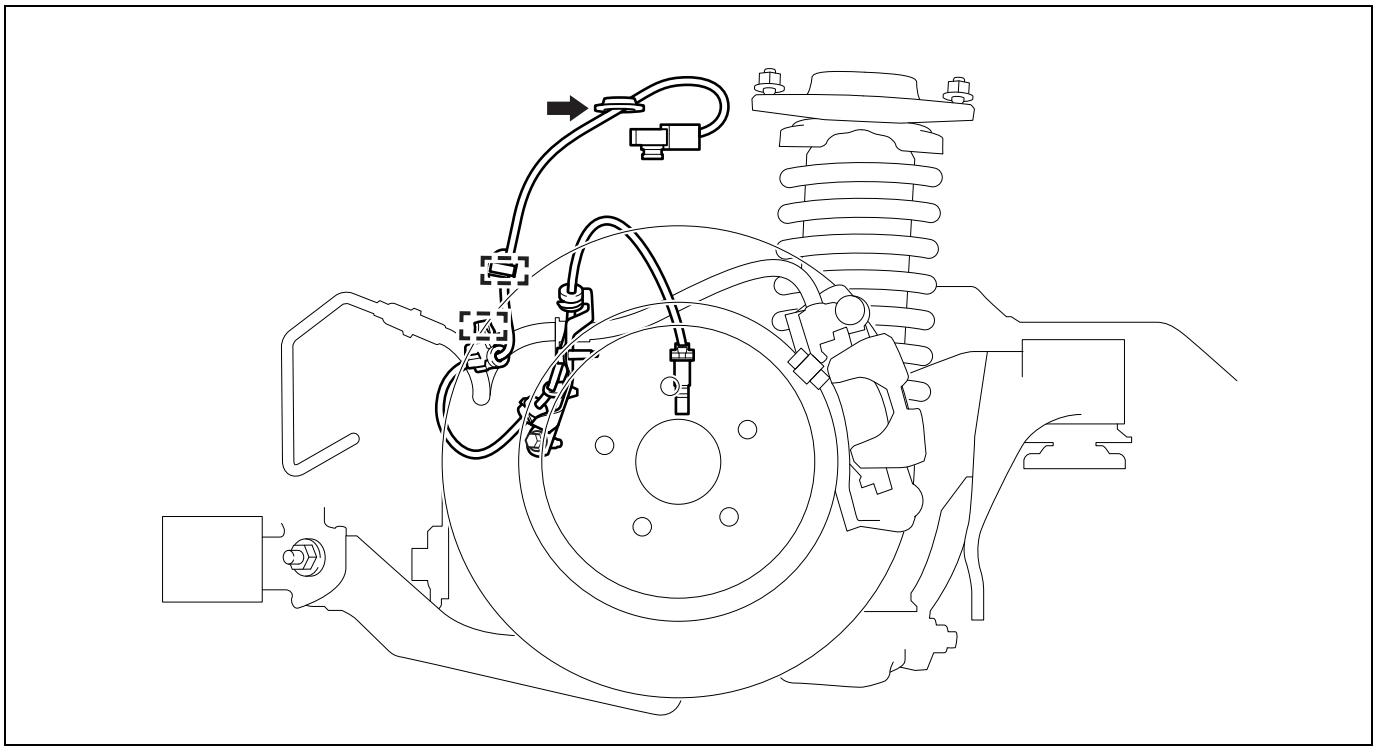

➡	Grommet	-	-

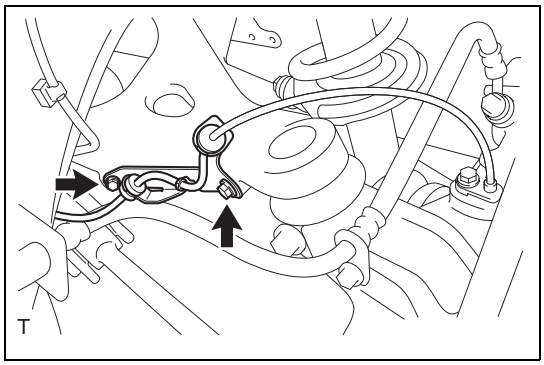

(4) Remove 2 bolts from the bracket.

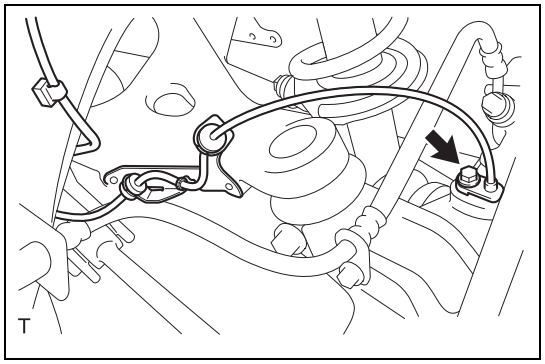

(5) Remove the bolts and the speed sensor RR LH.
CAUTION:
Do not let foreign matter stick to the installation part and the tip of the speed sensor RR LH.

Installation

NOTE:
The following procedure is for LH side. Perform the same procedures for the RH and LH side.

1. Installation of speed sensor RR LH
   (1) Install the speed sensor RR LH with 3 bolts.
   Standard value:T=7.5N·m {77kgf·cm} {5.5ft·lbf}
   CAUTION:
   Do not let foreign matter stick to the installation part and the tip of the speed sensor RR LH.
   (2) Attach 2 harness clamps.
   CAUTION:
   Do not attach the harness clamps and the harness bracket with the speed sensor RR LH wire twisted.
   (3) Pull the grommet from inside the vehicle and secure it.
   CAUTION:
   - Do not pull the wiring harness of the speed sensor RR LH.
   - Do not secure the drilled grommet obliquely.
   (4) Connect the connector.
   (5) Install the trunk floor mat.
2. Installation of rear tire
   Standard value:T=120N·m {1224kgf·cm} {88.5ft·lbf}

Steering sensor

Exploded view

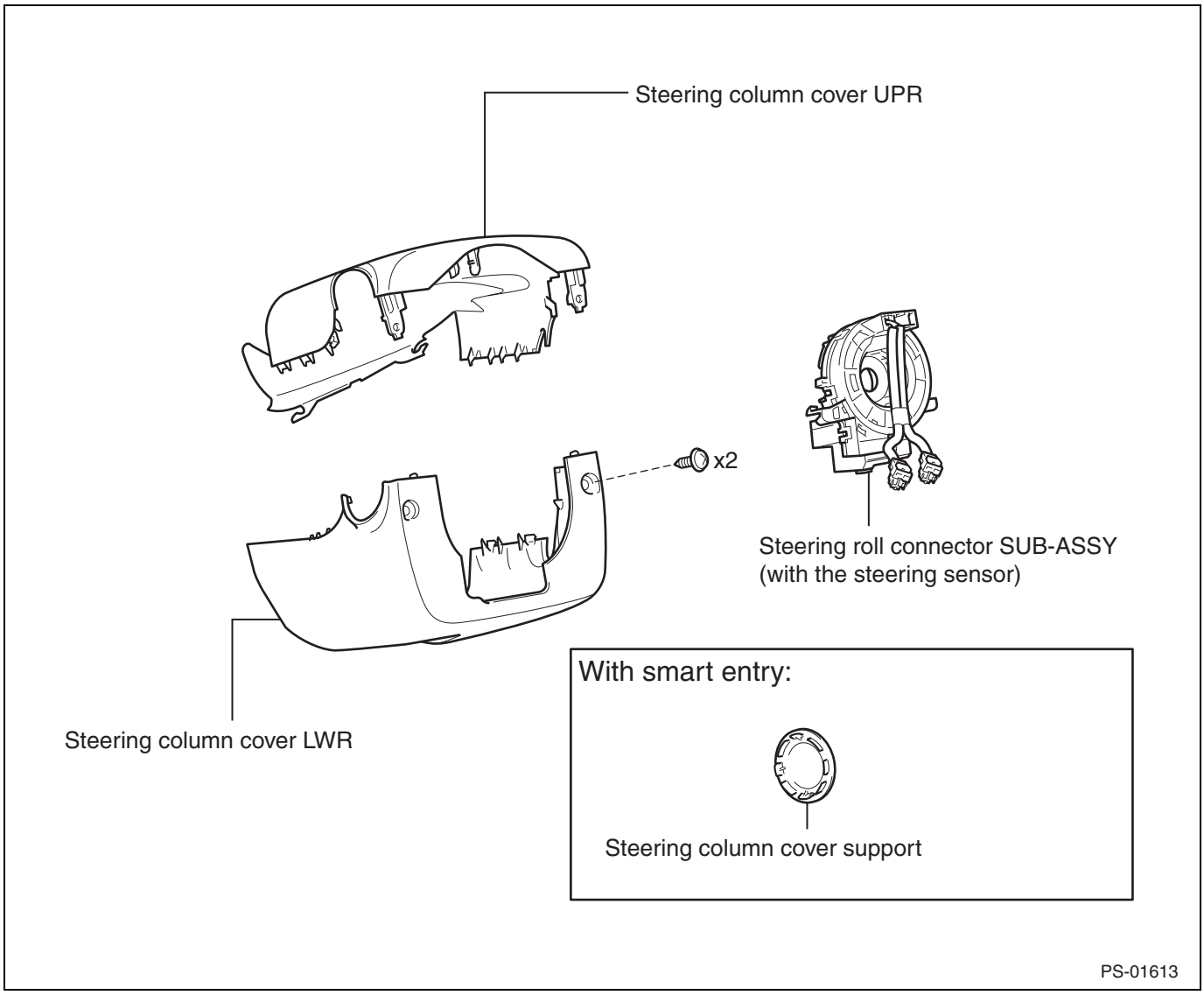

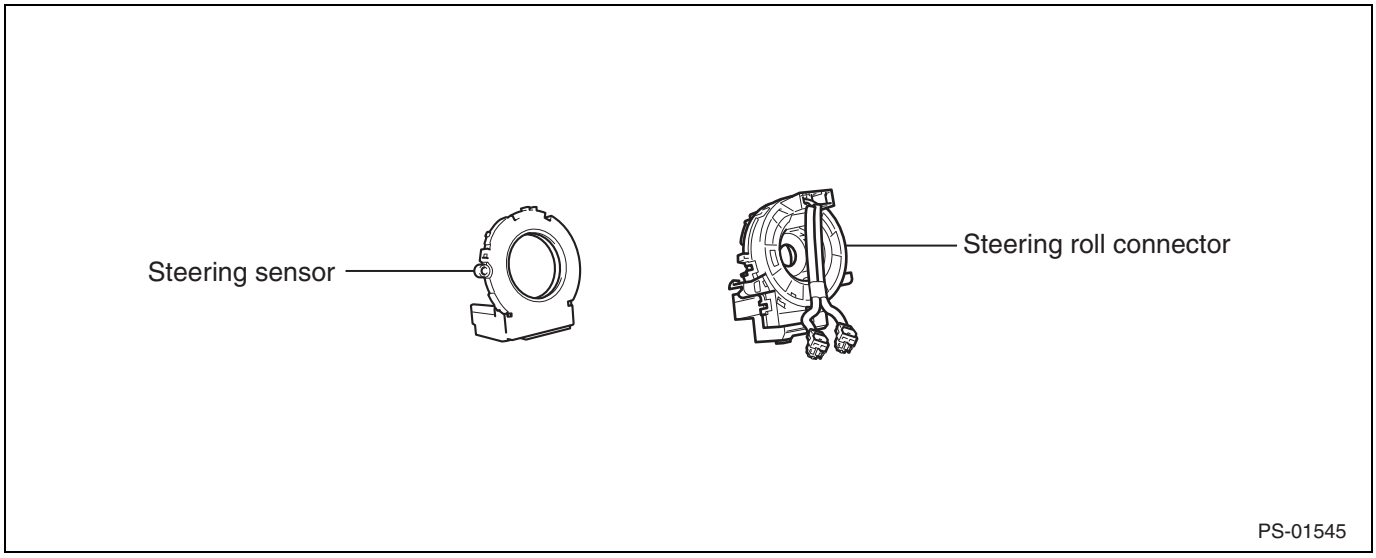

BC

Removal

WARNING:

The following service operations include the works which may affect the SRS airbag system. Before starting work, always check the precautions for the SRS airbag system. (Refer to RS - 5)

1. Confirmation of front tires in the straight-ahead position
2. Precautions

   CAUTION:

   After turning the ignition switch to OFF, you may have to wait for a while before disconnecting the battery terminals. Check appropriate precautions for battery terminal disconnection before proceeding. (Refer to IN - 6)
3. Disconnection of the battery ground terminal
   (1) Turn the ignition switch to OFF, disconnect the battery ground terminal, and then wait for 60 seconds before starting the work.

   WARNING:

   The air bag and the pretensioner system have a back up power supply. If you start working within 60 seconds after disconnecting the battery ground terminal, the air bag may be activated.

   CAUTION:

   To avoid damage to the molding, be sure to fully open the door glasses on both driver's and passenger's sides.
4. Removal of steering wheel (Refer to SR - 67)
5. Removal of steering column cover support (with smart entry)
   (1) Release 4 claws and remove the steering column cover support.
6. Removal of the steering column cover LWR (Refer to SR - 54)
7. Removal of the steering column cover UPR (Refer to SR - 55)
8. Removal of steering roll connector SUB-ASSY (with steering sensor) (Refer to RS - 251)
9. Removal of steering sensor

   CAUTION:

   - Only when repairing the steering roll connector or the steering sensor, remove it.
   - Do not rotate the center part of the steering sensor because the centering point of the steering sensor may be shifted.

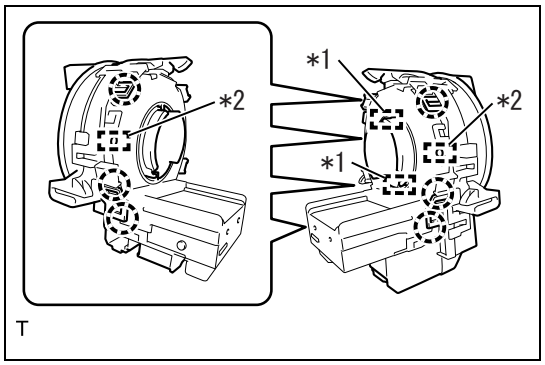

T

(1) Release 6 claws and 2 pins, and then remove the steering sensor from the steering roll connector.

CAUTION:

- Do not damage the guide.
- Do not damage the claws of the steering sensor.

Captions in illustration

*1	Guide
*2	Pin

Installation

WARNING:

The following service operations include the works which may affect the SRS airbag system. Before starting work, always check the precautions for the SRS airbag system. (Refer to RS - 5)

BC

1. Installation of steering sensor
   (1) Apply grease to the protruding part of the inner periphery of the steering sensor.
   (2) Align 2 pins and 2 guides.
   (3) Engage 6 claws, and then attach the steering sensor to the steering roll connector.

   CAUTION:

   Do not rotate the steering sensor until the steering sensor is attached to the spiral cable.
2. Installation of steering roll connector SUB-ASSY (with steering sensor) (Refer to RS - 252)
3. Installation of the steering column cover UPR (Refer to SR - 63)
4. Installation of the steering column cover LWR (Refer to SR - 63)
5. Installation of steering column cover support (with smart entry)
6. Confirmation of front tires in the straight-ahead position

7. Steering roll connector centering (Refer to RS - 252)
8. Installation of steering wheel (Refer to SR - 69)
9. Connection of the battery ground terminal
   Standard value:T=6.0N·m {61kgf·cm} {4.4ft·lbf}
10. Settings when removing/installing battery terminals (Refer to IN - 10)
11. VDC sensor mid point setting (Refer to BC - 15)
12. Inspection of airbag warning light (Refer to RS - 53)

VSC (VDC) OFF switch

Exploded view

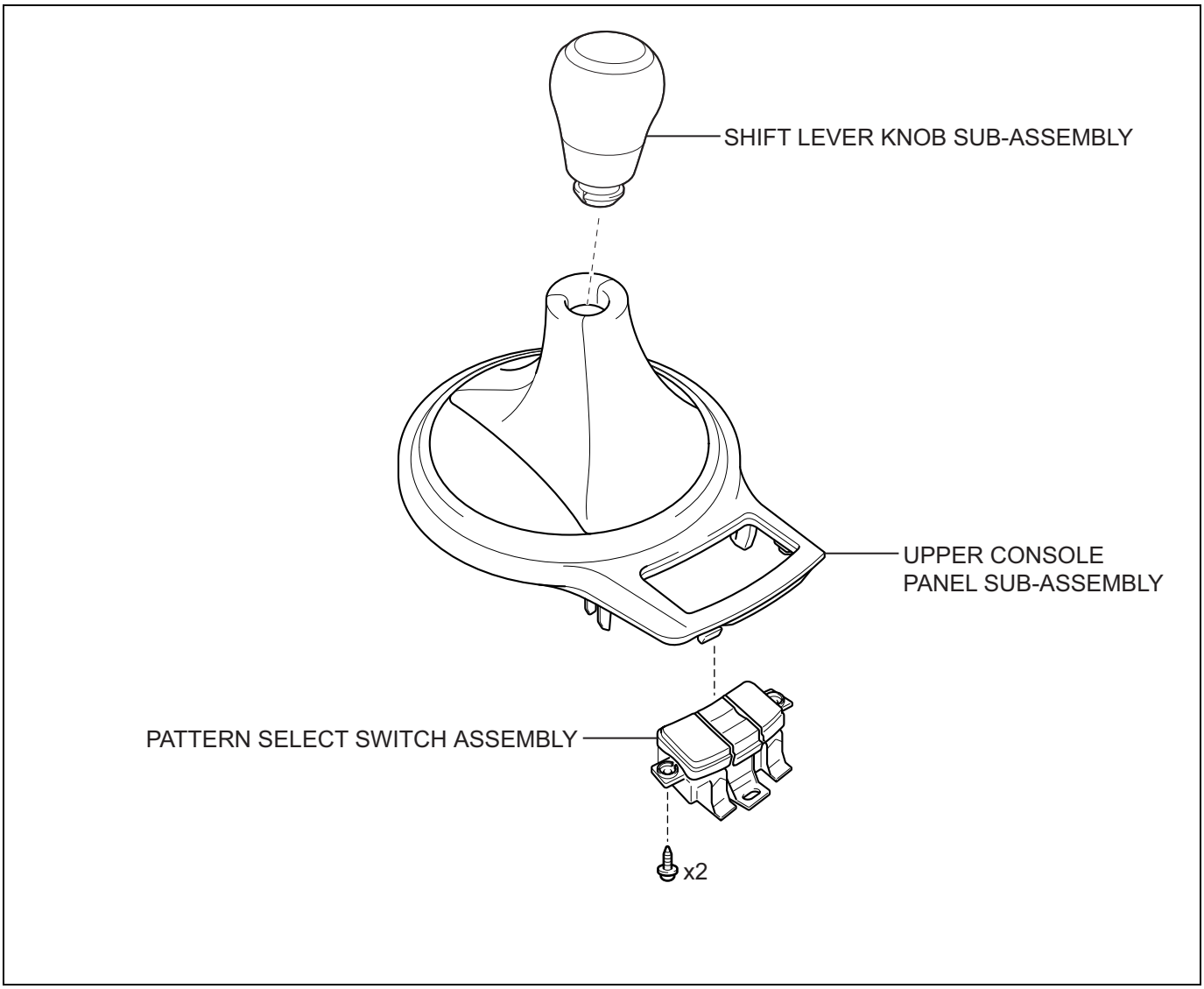

Removal

1. Removal of shift lever knob (transmission M/T) (Refer to IT - 36)
2. Removal of shifting hole cover SUB-ASSY (transmission M/T) (Refer to IT - 36)
3. Removal of shift lever knob (transmission A/T) (Refer to IT - 35)
4. Removal of shifting hole cover SUB-ASSY (transmission A/T) (Refer to IT - 35)
5. Removal of console switch ASSY
   (1) Disconnect the connector.
   (2) Disconnect the connector clamp. (Transmission A/T)

BC

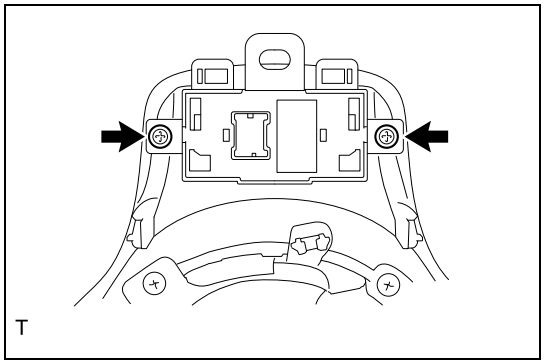
T

(3) Remove 2 screws and remove the console switch ASSY from the shifting hole cover SUB-ASSY.

Installation

1. Installation of console switch ASSY
   (1) With 2 screws, install the console switch ASSY to the shifting hole cover SUB-ASSY.
   (2) Install the connector clamp. (Transmission A/T)
   (3) Connect the connector.
2. Installation of shifting hole cover SUB-ASSY (transmission M/T) (Refer to IT - 39)
3. Installation of shift lever knob (transmission M/T) (Refer to IT - 39)
4. Installation of shifting hole cover SUB-ASSY (transmission A/T) (Refer to IT - 39)
5. Installation of shift lever knob (transmission A/T) (Refer to IT - 39)

Unit inspection

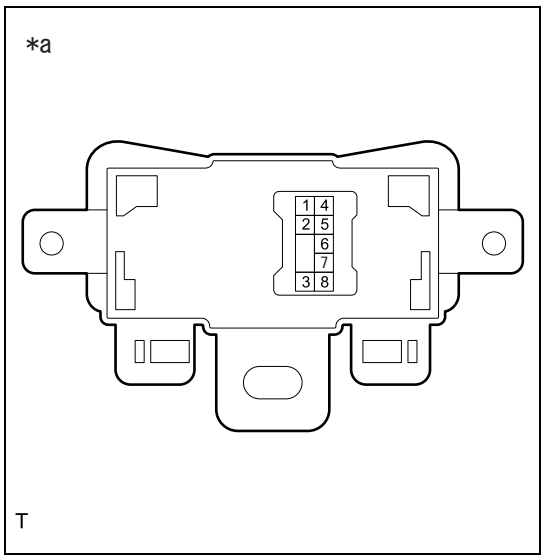

1. Console switch ASSY check
   (1) Check that the VSC (VDC) OFF switch is not sticking.
      (a)Check the resistance between the VSC (VDC) OFF switch terminals.

Criteria

Inspection terminals	Inspection conditions	Criteria
5 - 8	When the switch is not being operated	10 k Ωor more
	When the switch is being operated.	Less than 1 Ω

   (2) Check that the TRACK mode switch is not sticking.
      (a)Check the continuity between the TRACK mode switch terminals.

Criteria

Inspection terminals	Inspection conditions	Standard value
1 - 8	When the switch is not being operated	10 k Ωor more
	When the switch is being operated.	Less than 1 Ω

Captions in illustration

*a	Connector not connected (VSC (VDC) OFF switch)

   (3) Check the illumination operation.
      (a)Check the illumination operation when battery voltage is applied between connector terminals.

Criteria

Battery connection	Standard value
Battery positive →2 Battery negative →3	Illumination comes ON.

BC

Brake system / pedal / brake booster device

Brake system
- Precautions BR-2
- Function inspection BR-2
- Symptom table BR-3

Brake line
- Precautions BR-5
- Arrangement drawing BR-7

Brake fluid
- Refill BR-8
- Replacement BR-8
- Air bleeding BR-8
- On-vehicle inspection BR-12

Brake pedal (AT model)
- Exploded view BR-13
- Removal BR-14
- Disassembly BR-15
- Assembly BR-16
- Installation BR-17
- Adjustment BR-18

Brake pedal (MT model)
- Exploded view BR-20
- Removal BR-20
- Disassembly BR-21
- Assembly BR-22
- Installation BR-23
- Adjustment BR-23

Brake master cylinder ASSY
- Exploded view BR-24
- Removal BR-24
- Installation BR-25

Brake booster ASSY
- Exploded view BR-26
- Removal BR-28
- Installation BR-30
- Unit inspection BR-31

Vacuum pump ASSY
- Exploded view BR-32
- Removal BR-33
- Installation BR-35
- On-vehicle inspection BR-35

Brake system

Precautions

1. The speed sensor FR and RR are easily affected by magnetism. Use extra caution when working with magnets.
2. Replace each part correctly. Otherwise it may impair the brake system, leading to dangerous driving conditions. Use the same part or the equivalent for replacement.
3. When servicing the brake system, keep the parts and their surroundings clean.
4. If the vehicle is equipped with a device including a radio, refer to the precautions in "General" section.

Function inspection

1. Brake booster simple check
   (1) Function inspection of brake booster air-tightness
      (a)Start the engine, let it idle for 1 to 2 minutes, and then stop it.
      (b)Depress the brake pedal several times with an ordinary force, and check the height change of the brake pedal.
         Criteria: The brake pedal height goes up each time the pedal is depressed (The intervals between the first and second time, and the second and third time are 5 seconds or more).
   (2) Brake booster operation check
      (a)Depress the brake pedal several times in the same force with the engine turned OFF, and check that there is no height change in the brake pedal.
      (b)With the brake pedal depressed, start the engine and check the height change of the brake pedal.
         Criteria: When the engine is started with the brake pedal depressed, the brake pedal travels a little farther.
   (3) Function inspection of brake booster load air tightness
      (a)With the engine running, press and hold the brake pedal and stop the engine for 30 seconds to check the height change of the brake pedal.
         Criteria: No height change in the pedal
2. Function inspection of brake booster
   (1) Preparation for inspection

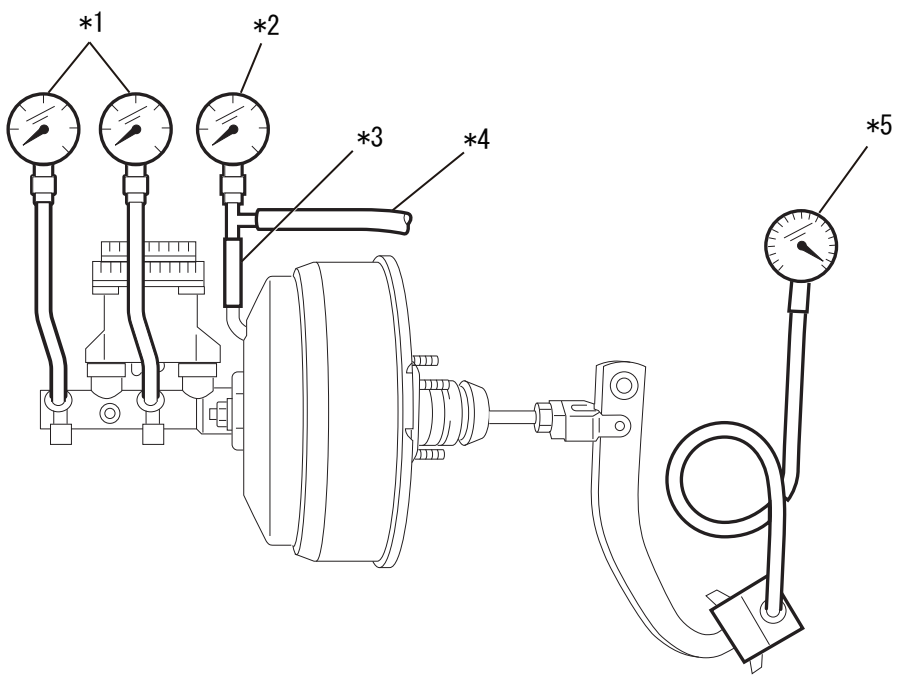

BR-01102

Captions in illustration

*1	Pressure gauge	*2	Vacuum gauge
*3	Adapter hose	*4	Vacuum hose
*5	Pedal force gauge		

   (2) Function inspection of air tightness

(a)Start the engine and then stop the engine at the vacuum pressure of 66.7 kPa {500 mmHg} {19.69 inHg} to check the vacuum pressure change.
Criteria: Vacuum pressure does not drop for 15 seconds.

(3) Function inspection of load air tightness
(a)Start the engine and depress the brake pedal at a pedal force of 196 N {20 kgf} {44.1l bf}. Then stop the engine at the vacuum pressure of 66.7 kPa {500 mmHg} to check the vacuum pressure change.
Criteria: Vacuum pressure drops to within 3.3 kPa{25 mmHg} {0.97 inHg} for 15 seconds.

(4) Non-boosting action check
(a)Stop the engine and depress the brake pedal several times to check the fluid pressure in each pedal force under conditions without vacuum pressure.

Standard value

Pedal force [N{kgf, lbf}]	Fluid pressure [MPa{kgf/cm^2, psi}]
147{15, 33.1}	0.56 {5.7, 8.12}
294 {33, 66.1}	1.64 {16.7, 23.8}

(5) Boosting action check
(a)Start the engine and increase the vacuum pressure up to 66.7 kPa{500 mmHg} in the brake booster, and then check the fluid pressure in each pedal force.

Standard value

Pedal force [N{kgf, lbf}]	Fluid pressure [MPa{kgf/cm^2, psi}]
147{15, 33.1}	105 {1075, 1522.5}
294 {33, 66.1}	112 {1146, 1624.0}

NOTE:
If the brake booster ASSY is faulty, check the check valve. If there is no problem with the check valve, replace the brake booster ASSY.

(6) Remove the pressure gauge, pedal force gauge, and vacuum gauge.
(7) Install the vacuum hose to the brake booster ASSY.
(8) Air bleeding of brake system (Refer to BR - 8)

Symptom table

Brake system

Symptoms	Inspection items	Reference pages	
		Normal type	Brembo type
Pedal sinks/Pedal pressure is soft.	Brake system (fluid leakage)	-	-
	Brake system (air entry)	BR - 8	BR - 8
	Front brake piston seal (wear or breakage)	FB - 5	FB - 8
	Rear brake piston seal (wear or breakage)	RB - 5	RB - 8
	Master cylinder (faulty)	BR - 24	BR - 24
Brake drag	Brake pedal play (minimum)	BR - 19	BR - 19
	Parking brake lever stroke (improper adjustment)	PB - 2	PB - 2
	Parking brake cable ASSY No.1 (sticking)	PB - 9	PB - 9
	Parking brake cable ASSY No.2 (sticking)	PB - 9	PB - 9
	Parking brake cable ASSY No.3 (sticking)	PB - 9	PB - 9
	Parking brake shoe clearance (improper adjustment)	PB - 24	PB - 24
	Front brake pad (crack or deformation)	FB - 5	FB - 8
	Rear brake pad (crack or deformation)	RB - 5	RB - 8
	Front brake piston (sticking)	FB - 9	FB - 10
	Rear brake piston (sticking)	RB - 10	RB - 11
	Front brake piston (seizure)	FB - 9	FB - 10
	Rear brake piston (seizure)	RB - 10	RB - 11
	Air leakage in booster	BR - 2	BR - 2
	Master cylinder (faulty)	BR - 24	BR - 24

Symptoms	Inspection items	Reference pages	
		Normal type	Brembo type
Brake working on one-side	Front brake piston (sticking)	FB - 9	FB - 10
	Rear brake piston (sticking)	RB - 10	RB - 11
	Front brake pad (oil stain)	FB - 5	FB - 8
	Rear brake pad (oil stain)	RB - 5	RB - 8
	Front brake piston (seizure)	FB - 9	FB - 10
	Rear brake piston (seizure)	RB - 10	RB - 11
	Front disc (uneven wear)	FB - 5	FB - 8
	Rear disc (uneven wear)	RB - 5	RB - 8
	Front brake pad (crack or deformation)	FB - 5	FB - 8
	Rear brake pad (crack or deformation)	RB - 5	RB - 8
Pedal is hard but the brake does not work well.	Brake system (fluid leakage)	-	-
	Brake system (air entry)	BR - 8	BR - 8
	Front brake piston (sticking)	FB - 9	FB - 10
	Rear brake piston (sticking)	RB - 10	RB - 11
	Front brake pad (crack or deformation)	FB - 5	FB - 8
	Rear brake pad (crack or deformation)	RB - 5	RB - 8
	Front brake pad (oil stain)	FB - 5	FB - 8
	Rear brake pad (oil stain)	RB - 5	RB - 8
	Front brake pad (burn in)	FB - 5	FB - 8
	Rear brake pad (burn in)	RB - 5	RB - 8
	Front disc (uneven wear)	FB - 5	FB - 8
	Rear disc (uneven wear)	RB - 5	RB - 8
	Air leakage in booster	BR - 2	BR - 2
Noise from brake	Front brake pad (crack or deformation)	FB - 5	FB - 8
	Rear brake pad (crack or deformation)	RB - 5	RB - 8
	Front brake mounting bolt (looseness)	FB - 5	FB - 8
	Rear brake mounting bolt (looseness)	RB - 5	RB - 8
	Front disc (scratch)	FB - 5	FB - 8
	Rear disc (scratch)	RB - 5	RB - 8
	Front pad support plate (looseness)	FB - 9	FB - 10
	Front slide pin (wear)	FB - 9	FB - 10
	Front brake pad (dirt)	FB - 5	FB - 8
	Rear brake pad (dirt)	RB - 5	RB - 8
	Front brake pad (burn in)	FB - 5	FB - 8
	Rear brake pad (burn in)	RB - 5	RB - 8
	Front anti squeal shim (breakage)	FB - 5	FB - 8
	Rear anti squeal shim (breakage)	RB - 5	RB - 8

Brake line

Precautions

1. This part is critical to safety. If brake fluid leakage is found, be sure to disassemble the parts, and replace the faulty parts with new ones if any.
2. When removing each component of the brake, protect it with cover to prevent foreign matter such as dirt or dust from entering the connecting part
3. Do not damage or deform the brake tube during removal/installation of the parts.
4. When installing the grommet to the body, make sure that the brake tube is positioned in the center of the grommet.
5. When installing the brake tube and the flexible hose, make sure that they are not twisted or bent.
6. If the connecting part of the flexible hose does not fit the bracket groove, twist the flexible hose at the minimum angle needed to insert.
7. Do not reuse the flexible hose mounting clip.
8. Make sure that the flexible hose is free from lubricants such as absorber oil and grease.
9. When installing the brake tube to the resin clamp, make sure to attach the brake tube to the clamp securely without the brake tube wiggling or snagging.
10. When installing the brake tube and the flexible hose, make sure that they do not interfere with other parts.
11. Do not let brake fluid come into contact with the painted surface of the body. Wipe the surface off quickly and clean it with water if contaminated.

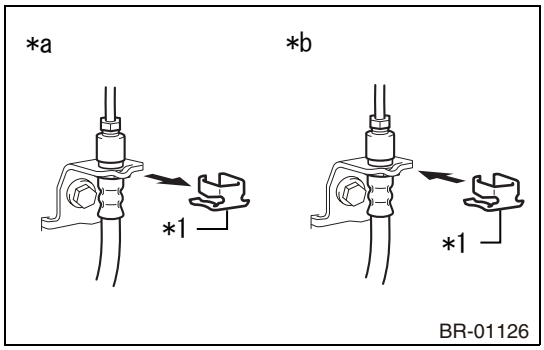

12. Disconnection and connection of flexible hose and brake tube
    (1) Using a spanner, secure the flexible hose. Then using a flare-nut wrench, disconnect the brake tube without deforming it.

Captions in illustration

*1	Clip
*a	When disconnecting
*b	When connecting

    (2) Connect the flexible hose and the brake tube temporarily.
    (3) With a new clip, secure the flexible hose. At this time, attach the clip completely.
    (4) Being careful not to deform the brake tube, tighten the brake tube securely with a flare-nut wrench.
    Standard value:T=15N·m {153kgf·cm} {11.1ft·lbf}

13. Connection of brake tube and way
    (1) Connect the way and the brake tube temporarily.

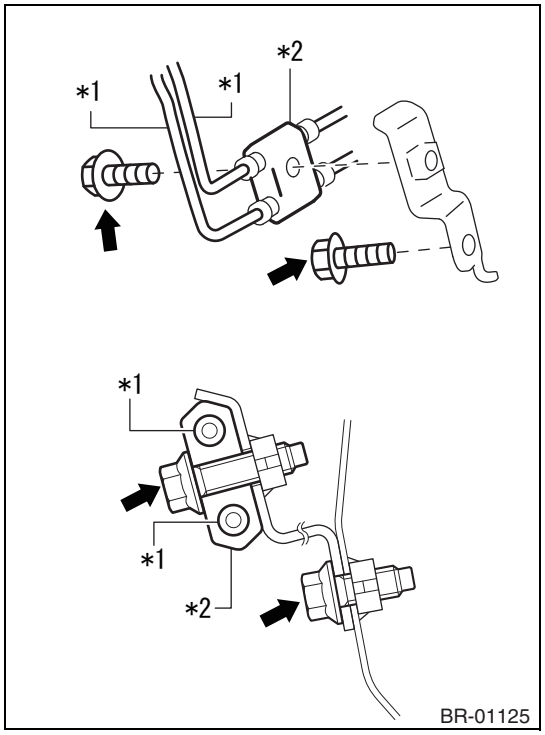

(2) Holding the way to prevent the brake tube from deforming, connect the brake tube with a flare-nut wrench.
Standard value:T=15N·m {153kgf·cm} {11.1ft·lbf}

Captions in illustration

*1	Brake tube
*2	Way

(3) Holding the way to prevent the brake tube from deforming, connect the way to the body with bolts.
Standard value:T=18N·m {184kgf·cm} {13.3ft·lbf}

Arrangement drawing

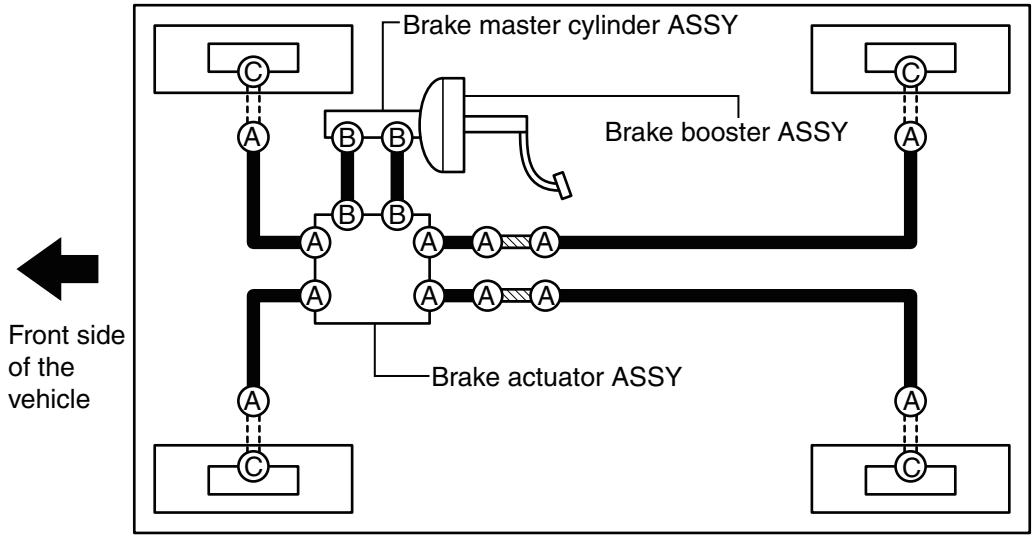

: Brake tube

: Flexible hose

: Brake tube way

Ⓐ : Flare-nut tightening torque

15 N•m{155 kgf•cm, 11.1 ft•lbf} (Specified tightening torque)

Ⓑ : Flare-nut tightening torque

19 N•m{194 kgf•cm, 14.0 ft•lbf}

Ⓒ : Union bolt tightening torque

26 N•m{265 kgf•cm, 19.2 ft•lbf}

BR-10019

Brake fluid

Refill

1. Refill of brake fluid

   CAUTION:

   Do not let brake fluid come into contact with the painted surface. If it happens, wash it out immediately.

   (1) Remove the reservoir filler cap.

   (2) Fill the brake master cylinder reservoir ASSY with brake fluid up to the MAX level.

Replacement

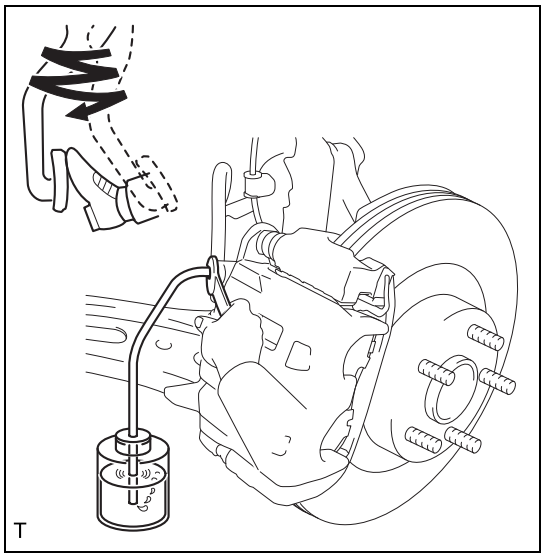

1. Replacement of brake fluid

   CAUTION:

   - Do not let brake fluid come into contact with the painted surface of the vehicle. If spilled, wash it off with water and wipe clean quickly.
   - Do not reuse drained brake fluid. When refilling, always use new brake fluid.
   - To prevent deterioration of brake fluid performance, do not mix different grades of brake fluid (even if they are same brand).
   - Do not allow dirt or dust to enter the brake master cylinder reservoir ASSY.

   NOTE:

   - During work, refill brake fluid frequently to prevent the brake master cylinder reservoir ASSY from becoming empty, which prevents air entry.
   - When operating the brake pedal, depress it slowly to full stroke.
   - Work in pairs to work safely and easily.
   - The necessary amount of brake fluid is approx. 500 mL (16.9 US fl oz, 17.6 Imp fl oz) for the entire brake system.

   (1) Lift up the vehicle.

   (2) Remove the wheels (front and rear, both sides).

   (3) Drain brake fluid from the brake master cylinder reservoir ASSY.

   (4) Refill the brake master cylinder reservoir ASSY with the recommended brake fluid, and then perform the same procedure as the brake line air bleeding on each brake caliper. (Refer to BR - 8)

   Recommended brake fluid: FMVSS No. 116 DOT3

   NOTE:

   Repeat depressing the brake pedal to full stroke slowly until the new brake fluid flows out of the transparent plastic tube. (For the new brake fluid from the brake master cylinder SUB-ASSY to flow out of the bleeder screw, the pedal operation is required twenty times or more for each brake caliper.)

2. Brake fluid level check (Refer to BR - 12)

Air bleeding

1. Precautions for handling·procedures

   CAUTION:

   - Do not let brake fluid come into contact with the painted surface of the vehicle. If spilled, wash it off with water and wipe clean quickly.
   - Do not reuse drained brake fluid. When refilling, always use new brake fluid.
   - To prevent deterioration of brake fluid performance, do not mix different grades of brake fluid (even if they are same brand).
   - Do not allow dirt or dust to enter the brake master cylinder SUB-ASSY.
   - Work in pairs to work safely and easily.
   - During work, refill brake fluid frequently to over the MIN level to prevent the brake master cylinder reservoir ASSY from becoming empty, which prevents air entry.

   NOTE:

   For procedures of air bleeding in each part, refer to the following.

- Brake master cylinder SUB-ASSY: Refer to BR - 9.
- Brake line: Refer to BR - 10.
- Brake actuator ASSY: Refer to BR - 11.
- Caliper body ASSY: Refer to BR - 12.

2. Air bleeding of master cylinder
   NOTE:
   - When the brake master cylinder SUB-ASSY has been replaced, or the brake master cylinder reservoir ASSY is empty, bleed air from the brake master cylinder ASSY.
   - When air bleeding of the brake master cylinder SUB-ASSY is not necessary, omit the following procedure and bleed air from the brake line. (Refer to BR - 10)

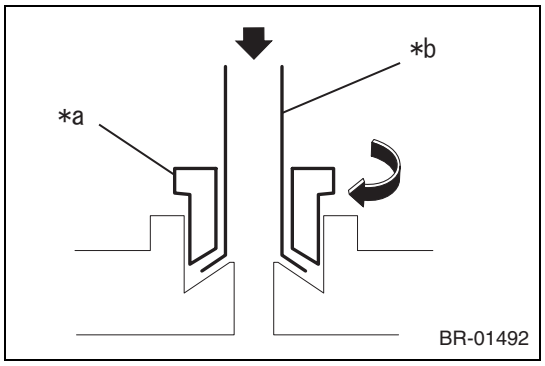

(1) While pushing the brake tube against the brake master cylinder SUB-ASSY, press it until the tip of the flare-nut comes into contact with the back surface of the brake tube flare, and then tighten it.
CAUTION:
Be careful not to damage the inner wall of the brake tube flare.
Standard value:T=19 N·m {194 kgf·cm} {14 ft-lb}

*a	Flare-nut
*b	Brake pipe

(2) Fill the brake master cylinder reservoir ASSY of the brake master cylinder SUB-ASSY with brake fluid.
NOTE:
- Fill the brake fluid up to the MAX level.
- During work, refill brake fluid frequently to over the MIN level to prevent the brake master cylinder reservoir ASSY from becoming empty, which prevents air entry.

(3) Install a transparent plastic tube to the bleeder screw of the right front caliper body ASSY, and install the other end of the tube to a recovery container.
(4) Loosen the bleeder screw, and then slowly depress the brake pedal and hold it.
(5) Tighten the bleeder screw, and then release the brake pedal quickly.
(6) Repeat the steps (4) to (5) until no air bubbles are seen in the brake fluid in the plastic tube.
NOTE:
- Repeat the steps six or seven times to get rid of air bubbles.
- For the brembo type, perform in the order of inner →outer.

(7) Install a transparent plastic tube to the bleeder screw of the left front caliper body ASSY, and install the other end of the tube to a brake fluid recovery container.
(8) Repeat the steps (4) to (5) until no air bubbles are seen in the brake fluid in the plastic tube.
NOTE:
- Repeat the steps seven or eight times to get rid of air bubbles.
- For the brembo type, perform in the order of inner →outer.
- By performing steps up to here, air in the front brake piping passage and the front caliper is bled.
  Then perform the following procedure to bleed air which entered the rear brake piping passage and the rear caliper from the brake actuator ASSY.

(9) Install a transparent plastic tube to the bleeder screw of the left rear caliper body ASSY, and install the other end of the tube to a brake fluid recovery container.
(10) Loosen the bleeder screw and repeat depressing the brake pedal to full stroke slowly. Then tighten the bleeder screw repeatedly until no air bubbles are seen in the brake fluid in the plastic tube.
NOTE:
- For the brembo type, perform in the order of inner →outer.
- By repeating the steps fifteen times or more, the air which entered the rear brake piping passage from the brake actuator ASSY reaches to the bleeder screw of the left rear caliper body ASSY, and then is drained.

(11) Install a transparent plastic tube to the bleeder screw of the right rear caliper body ASSY, and install the other end of the tube to a brake fluid recovery container.
(12) Perform the step (10).

NOTE:
- For the brembo type, perform in the order of inner →outer.
- By repeating the steps ten times or more, the air which entered the rear brake piping passage from the brake actuator ASSY reaches to the bleeder screw of the right rear caliper body ASSY, and then is drained.
- By performing steps up to here, air which entered the rear brake piping passage and the rear caliper body ASSY from the brake actuator ASSY is bled.

Finally, perform the following procedure to bleed air which may remain in brake fluid stagnation areas.

(13) Install a transparent plastic tube to the bleeder screw of the right front caliper body ASSY, and install the other end of the tube to a brake fluid recovery container.

(14) Repeat depressing the brake pedal hard and quickly five or six times, and then hold the pedal depressed.

(15) Loosen the bleeder screw to drain brake fluid. When the brake pedal reaches the full stroke position, tighten the bleeder screw quickly, and then release the brake pedal.

(16) Repeat the steps (14) to (15) until no air bubbles are seen in the transparent plastic tube.

NOTE:
Repeat the steps four or five times.

(17) Repeat the steps (14) to (16) on each caliper body ASSY.

NOTE:
- Perform air bleeding in order of the front RH→front LH→rear LH→rear RH.
- For the brembo type, perform air bleeding in inner →outer in the order of front RH →front LH →rear LH →rear RH.

(18) Tighten each bleeder screw to the specified torque.

(a) Normal type

Standard value: T=8 N·m {82 kgf·cm} {5.9 ft-lb}

(b) Brembo type

Standard value: T=20 N·m {203 kgf·cm} {14.8 ft-lb}

(19) Install the cap bleeder to each bleeder screw.

CAUTION:
Remaining brake fluid inside and outside of the bleeder screw may cause misleading of damage to the painted surface and fluid leakage. Therefore, make sure to wipe off the brake fluid well after tightening.

3. Air bleeding of brake line

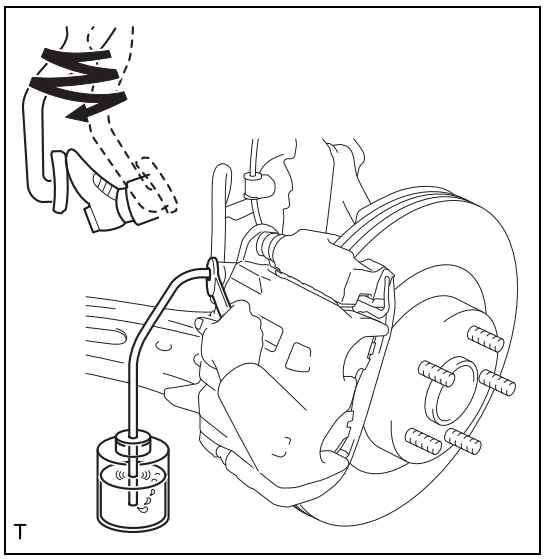

T

(1) When the brake master cylinder SUB-ASSY has been replaced, or the brake master cylinder reservoir ASSY is empty, bleed air from the brake master cylinder SUB-ASSY before bleeding air from the brake line. (Refer to BR - 9)

(2) Fill the brake master cylinder reservoir ASSY of the brake master cylinder SUB-ASSY with brake fluid.

NOTE:
During work, refill brake fluid frequently to prevent the brake master cylinder reservoir ASSY from becoming empty, which prevents air entry.

(3) Install one end of a transparent plastic tube to the bleeder screw, and then install the other end of the tube to a brake fluid recovery container.

(4) Loosen the bleeder screw and depress the brake pedal to full stroke. Repeat it until no air bubbles are seen in the brake fluid in the transparent plastic tube.

NOTE:
Repeat the depressing operation fifteen times or more for the front caliper body ASSY and twenty times or more for the rear caliper body ASSY to get rid of air bubbles.

(5) Repeat the steps (2) to (4) on each caliper body ASSY.
NOTE:
- Perform air bleeding in order of the front RH→front LH→rear LH→rear RH.
- For the brembo type, perform air bleeding in inner →outer in the order of front RH →front LH →rear LH →rear RH.

(6) Tighten the loosened bleeder screw and repeat depressing the brake pedal hard and quickly five or six times, and then hold the pedal depressed.

(7) Loosen the bleeder screw and drain the brake fluid. When the brake pedal reaches the full stroke position, tighten the bleeder screw quickly, and then release the brake pedal.

(8) Repeat the steps (6) to (7) until no air bubbles are seen in the transparent plastic tube.

(9) Repeat the steps (6) to (8) on each brake caliper.
NOTE:
- Perform air bleeding in order of the front RH→front LH→rear LH→rear RH.
- For the brembo type, perform air bleeding in inner →outer in the order of front RH →front LH →rear LH →rear RH.

(10) Perform function inspection of both systems ABS and VSC.
CAUTION:
- If the entry of air into the pressure control part in the brake actuator ASSY may occur, perform the steps (11) to (16).
- In the regular air bleeding, do not activate the function inspection of the brake actuator ASSY (The function inspection may cause air in the regular air bleeding passage to move into the pressure control part).

NOTE:
- The regular air bleeding cannot bleed air which entered the pressure control part in the brake actuator ASSY.
- If the entry of air into the pressure control part in the brake actuator ASSY may occur (such as the case when the VSC or ABS was accidentally activated while air existed in the regular air bleeding passage), perform function inspection of both systems ABS and VSC.

(11) Perform the ABS function inspection. (Refer to BC - 4)
CAUTION:
Always perform the ABS function inspection first.

(12) Perform the air bleeding (3) to (4) on the bleeder screw of each caliper body ASSY.
NOTE:
- Perform air bleeding in order of the front RH→front LH→rear LH→rear RH.
- For the brembo type, perform air bleeding in inner →outer in the order of front RH →front LH →rear LH →rear RH.
- The necessary number of the full stroke depressing operation is approx. six times.

(13) Perform the VSC function inspection. (Refer to BC - 4)

(14) Perform the air bleeding (3) to (4) on the bleeder screw of each caliper body ASSY.

(15) Repeat the steps (11) to (14) three times.

(16) If the air is not bled completely in step (15), repeat the steps (11) to (14) until all the air is bled.

(17) Fill the brake master cylinder reservoir ASSY with brake fluid up to the MAX level.

(18) Tighten each bleeder screw to the specified torque.
(a) Normal type
Standard value: T=8 N·m {82 kgf·cm} {5.9 ft-lb}
(b) Brembo type
Standard value: T=20 N·m {203 kgf·cm} {14.8 ft-lb}

(19) Install the cap bleeder to each bleeder screw.
CAUTION:
Remaining brake fluid inside and outside of the bleeder screw may cause misleading of damage to the painted surface and fluid leakage. Therefore, make sure to wipe off the brake fluid well after tightening.

(20) Check the flare-nut part or the entire brake system for brake fluid leakage.

(21) Perform the road test to confirm the brake works correctly.

4. Air bleeding of brake actuator
(1) Bleed air from the brake line. (Refer to BR - 10)
NOTE:
If the entry of air into the pressure control part in the brake actuator ASSY may occur, perform function inspection of both systems ABS and VSC. (Refer to the steps for the brake line (10) to (16).)

5. Air bleeding of caliper body ASSY
   (1) Bleed air from the brake line. (Refer to BR - 10)
6. Brake fluid leak check
7. Brake fluid level check (Refer to BR - 12)

On-vehicle inspection

1. Precautions for handling·procedures
   CAUTION:
   - Do not let brake fluid come into contact with the painted surface of the vehicle. If spilled, wash it off with water and wipe clean quickly.
   - Do not reuse drained brake fluid. When refilling, always use new brake fluid.
   - To prevent deterioration of brake fluid performance, do not mix different grades of brake fluid (even if they are same brand).
   - Do not allow dirt or dust to enter the reservoir tank.
   - If a syringe, etc. is used for adjusting the fluid level, make sure that it has not been used for mineral oil, water, or deteriorated brake fluid. It causes deterioration of sealing parts and brake fluid, and fluid leakage and poor brake performance.

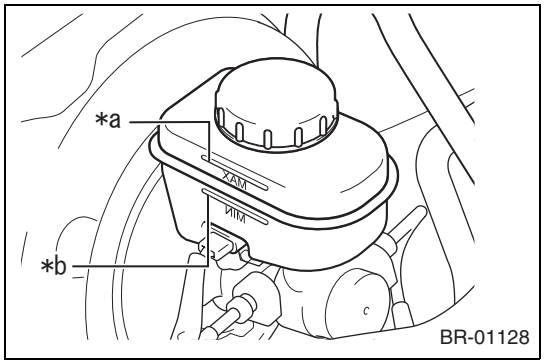

2. Brake fluid level check

Captions in illustration

*a	MAX level
*b	MIN level

(1) Check the fluid for discoloration.
(2) Check that the brake fluid level is between MIN and MAX.
(3) When the brake fluid level is close to MIN, check that there is no leakage from the brake tube or the flexible hose, and then confirm that the brake fluid level was lowered because of the worn brake pad.
(4) If the inspection reveals that the fluid is discolored significantly or inadequate for the specified amount, refill or change the brake fluid with new one.

Brake pedal (AT model)

Exploded view

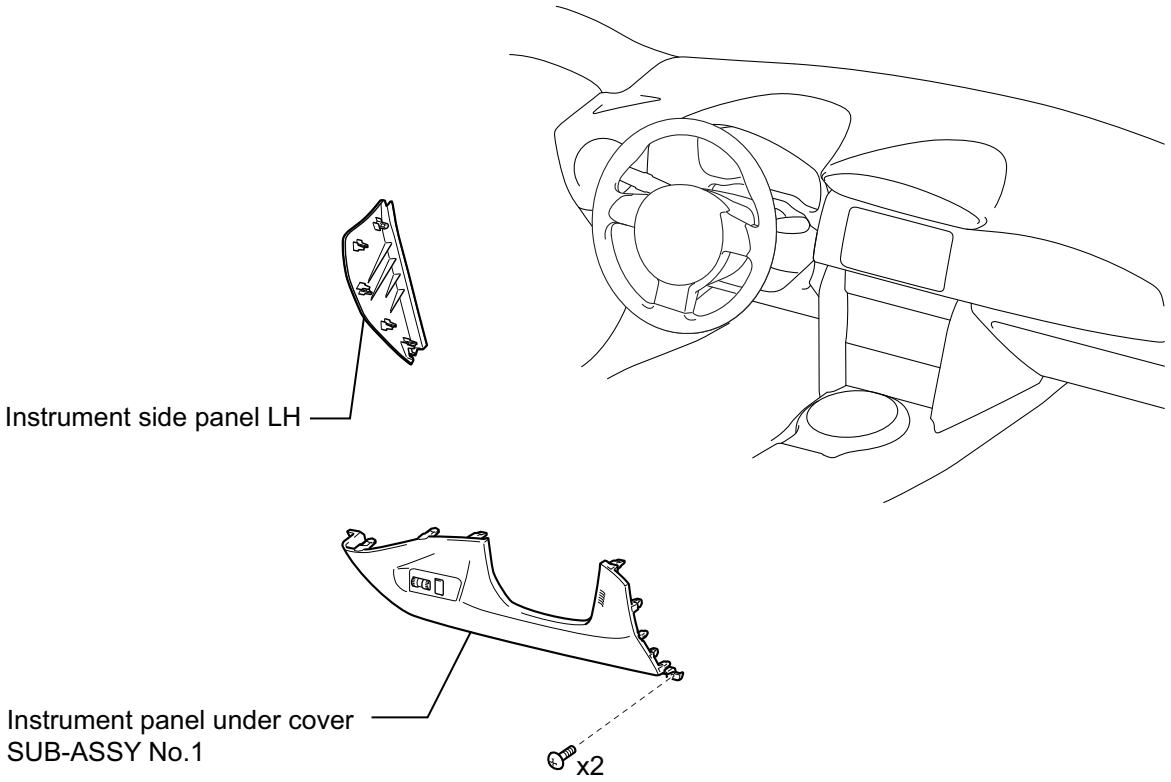

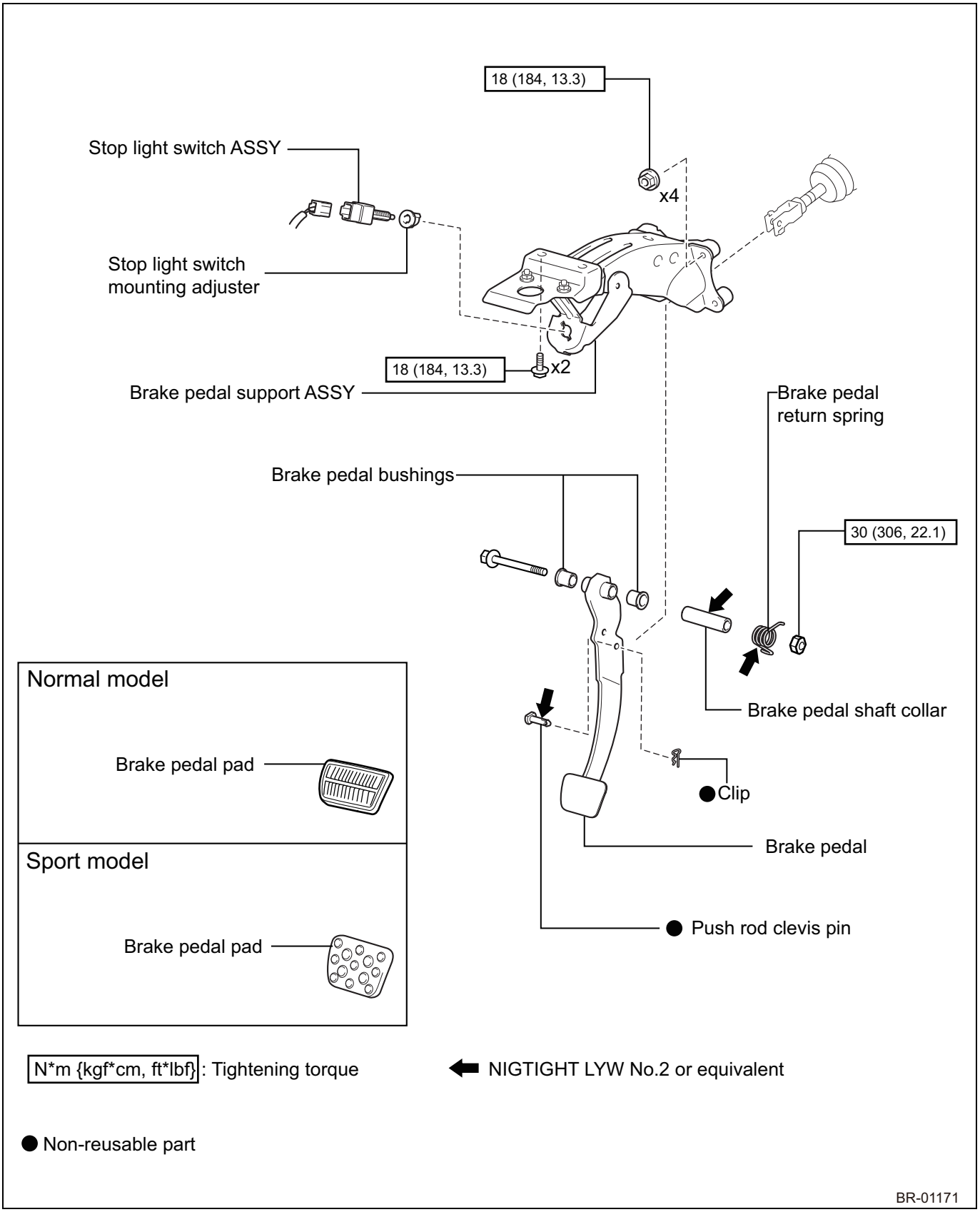

BR

Removal

1. Removal of instrument side panel LH (Refer to IT - 24)
2. Removal of instrument panel under cover SUB-ASSY No.1 (Refer to ME - 68)
3. Removal of stop light switch ASSY (Refer to LE - 78)

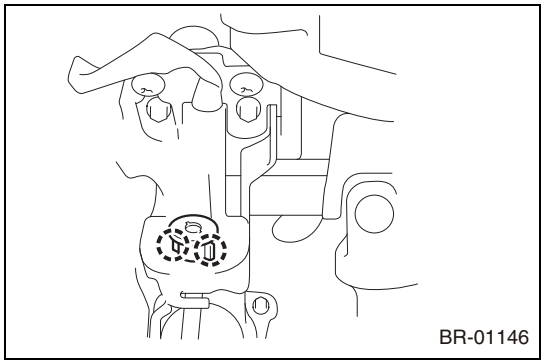

4. Removal of stop light switch mounting adjuster
   (1) Release 2 claws and remove the stop light switch mounting adjuster.

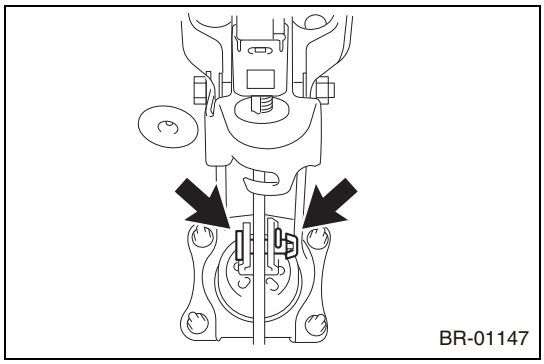

5. Removal of push rod pin
   (1) Remove the clips and the push rod pin.

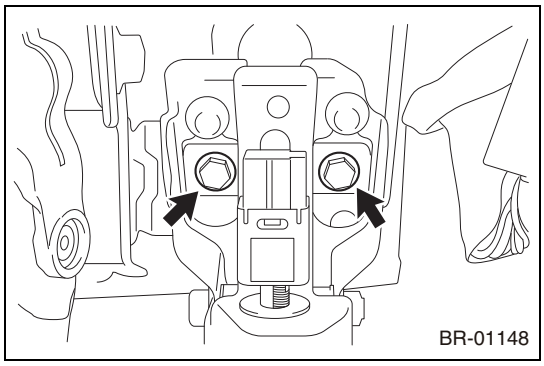

6. Removal of brake pedal support ASSY.
   (1) Remove 2 bolts.

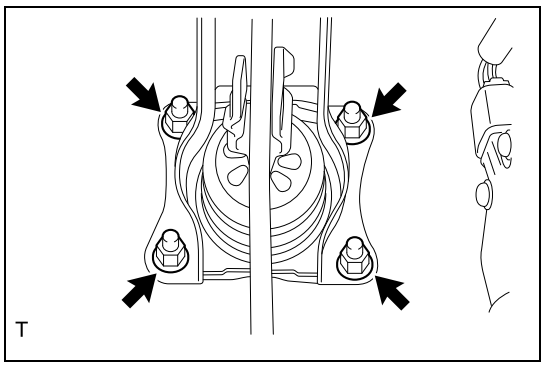

   (2) Remove 4 nuts and then the brake pedal support ASSY.

Disassembly

1. Removal of brake pedal stopper.
   (1) Remove the brake pedal stopper from the brake pedal.

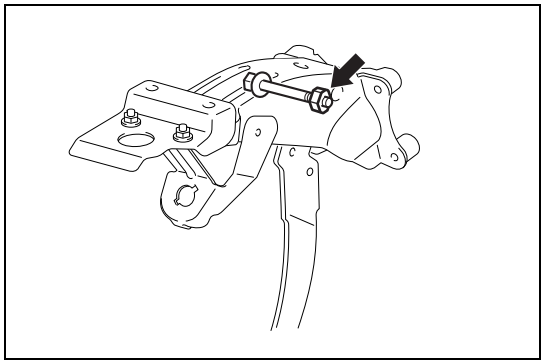

2. Removal of brake pedal
   (1) Remove the bolt and nut from the brake pedal support ASSY.
   NOTE:
   Hold the bolt and rotate the nut.
   (2) Remove the brake pedal return spring.
   (3) Remove the brake pedal shaft collar.
   (4) Remove 2 brake pedal shaft bushings.

Assembly

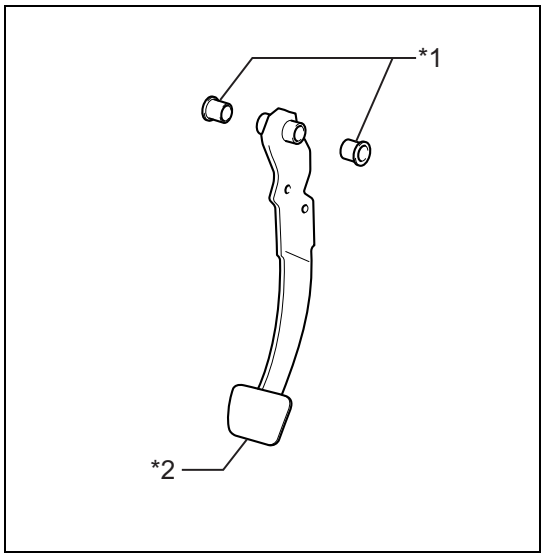

1. Installation of brake pedal bushings
   (1) Install the brake pedal bushings to the brake pedal.

Captions in illustration

*1	Brake pedal bushings
*2	Brake pedal

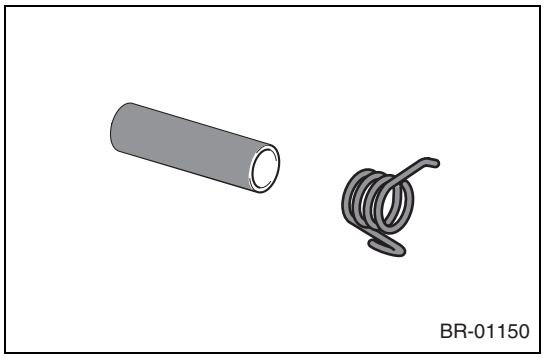

2. Installation of brake pedal
   (1) Apply NIGTIGHT LYW No.2 or equivalent to the sides of brake pedal shaft collar and the brake pedal return spring.

Captions in illustration

	NIGTIGHT LYW No.2 or equivalent

   (2) Install the brake pedal return spring and the brake pedal shaft collar to the brake pedal.

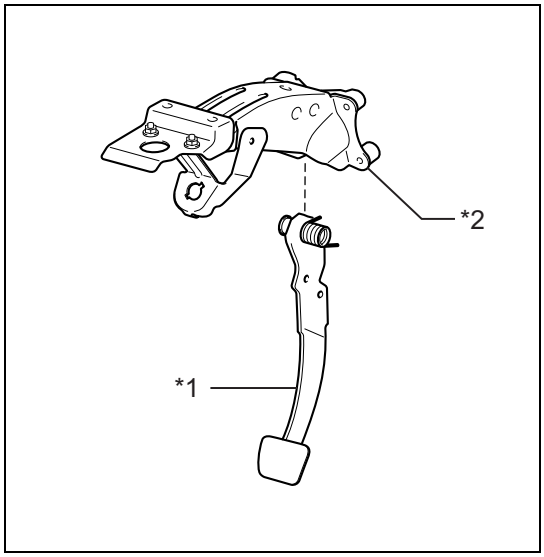

(3) Install the brake pedal to the brake pedal support ASSY.

Captions in illustration

*1	Brake pedal
*2	Brake pedal support ASSY

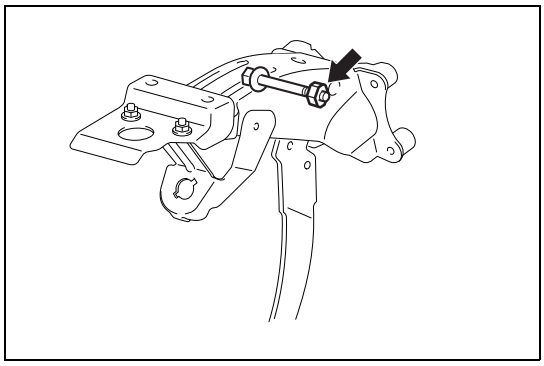

(4) Install the brake pedal to the brake pedal support ASSY with bolt and nut.
NOTE:
Secure the bolt and tighten the nut.
Standard value:T=30N·m {306kgf·cm} {22.1ft·lbf}

3. Installation of brake pedal stopper
   (1) Install the brake pedal stopper to the brake pedal.

Installation

1. Installation of brake pedal support ASSY
   (1) Temporarily install the brake pedal support ASSY with 2 bolts and 4 nuts.
   (2) Tighten 4 nuts.
   Standard value:T=18N·m {184kgf·cm} {13.3ft·lbf}
   (3) Tighten 2 bolts.
   Standard value:T=18N·m {184kgf·cm} {13.3ft·lbf}

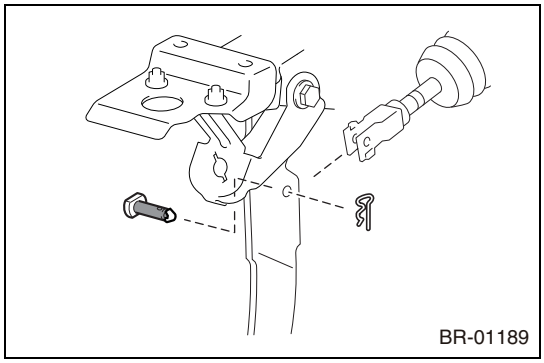

2. Installation of push rod pin
   (1) Apply NIGTIGHT LYW No. 2 or equivalent to the periphery of the push rod pin.

Captions in illustration

	NIGTIGHT LYW No.2 or equivalent

(2) Insert a new push rod pin from the left side of the vehicle, and connect the push rod clevis to the brake pedal ASSY with a new clip.

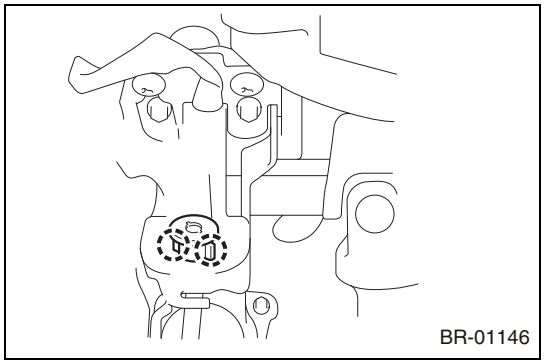
BR-01146

3. Installation of stop light switch mounting adjuster
   (1) Engage 2 claws, and install the stop light switch mounting adjuster.
4. Brake pedal height check ·adjustment (Refer to BR - 18)
5. Brake pedal free play check (Refer to BR - 19)
6. Brake pedal clearance check (Refer to BR - 19)
7. Installation of stop light switch ASSY (Refer to LE - 79)
8. Installation of instrument panel under cover SUB-ASSY No.1 (Refer to ME - 69)
9. Installation of instrument side panel LH (Refer to IT - 29)

Adjustment

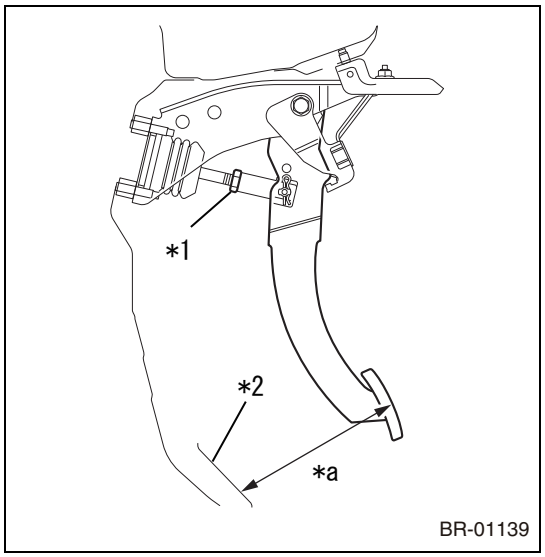

BR-01139

1. Brake pedal height check/adjustment
   (1) Brake pedal height check

Captions in illustration

*1	Clevis lock nut
*2	Floor mat
*a	Pedal height

Standard value (from the center of pedal pad to the upper surface of the floor mat)

M/T model	145mm {5.709in}
A/T model	150mm {5.906in}

   (2) Brake pedal height adjustment
      (a)Remove the instrument panel under cover SUB-ASSY No.1.
      (b)Disconnect the connector from the stop light switch.
      (c)Remove the stop light switch ASSY.
      (d)Loosen the clevis lock nut and rotate the push rod clevis to adjust the pedal height.

Standard value (from the center of pedal pad to the upper surface of the floor mat)

M/T model	145mm {5.709in}
A/T model	150mm {5.906in}

      (e)Tighten the clevis lock nut.
         Standard value:T=19N·m {194kgf·cm} {14.0ft·lbf}
      (f) Install the stop light switch.
      (g)Connect the connector to the stop light switch.
      (h)Make sure that the stop light does not illuminate with the brake pedal released.

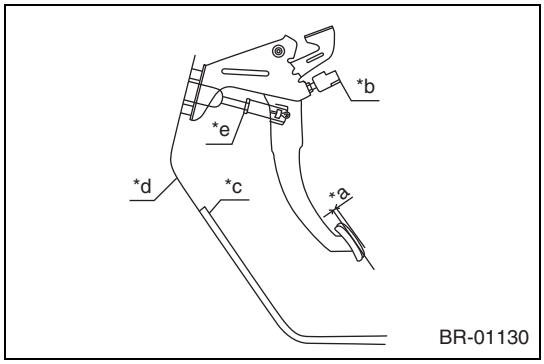

2. Brake pedal free play check
   (1) After stopping the engine, strongly depress the pedal several times to release the vacuum pressure in the brake booster.
   (2) Check the brake pedal for free play.

Captions in illustration

*a	Pedal free play
*b	Stop light switch
*c	Mat
*d	Toe board
*e	Brake booster operating rod

When pushing the brake pedal with the force less than 10 N {1 kgf, 2.2 lbf}.
Standard value: 0.5-2.7 mm {0.019-0.106 in} or less

   (3) If the free play is 1 mm {0.039 in} or less, check the protrusion allowance of the stop light switch ASSY shaft. (Refer to LE - 79)

3. Brake pedal clearance check
CAUTION:
Start the engine and make the vacuum pressure in the brake booster 66.7 kPa{500 mmHg} {19.69 inHg}. Then, check the brake pedal clearance.

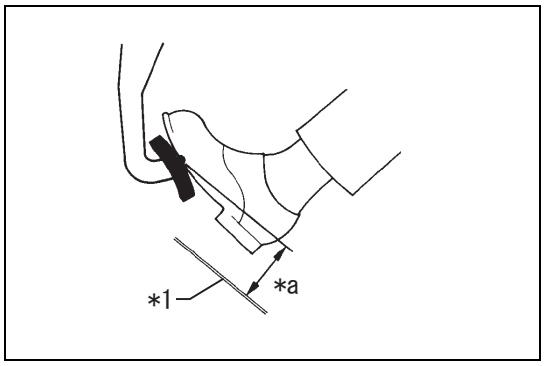

   (1) Check the brake pedal clearance.

Captions in illustration

*1	Floor mat
*a	Brake pedal clearance

Standard value

Standard for checking	Standard value
Pedal force of 490 N{50 kgf} {110.2 lbf}, from upper surface of the floor mat	55 mm {2.165 in} or more

Brake pedal (MT model)

Exploded view

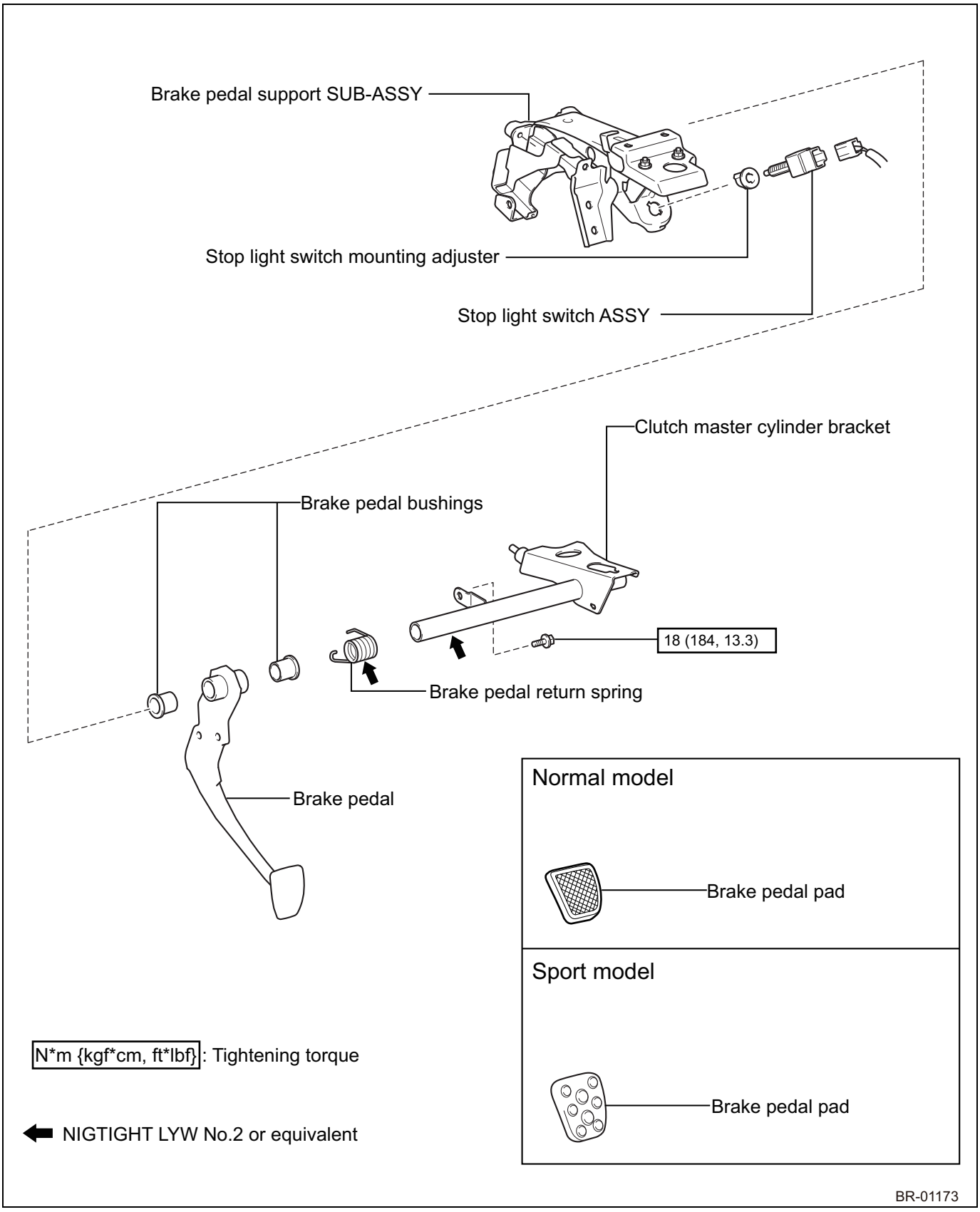

Removal

1. Removal of instrument side panel LH (Refer to IT - 24)

2. Removal of instrument panel under cover SUB-ASSY No.1 (Refer to ME - 68)
3. Removal of clutch pedal support SUB-ASSY (Refer to CL - 7)
4. Removal of stop light switch ASSY (Refer to LE - 78)

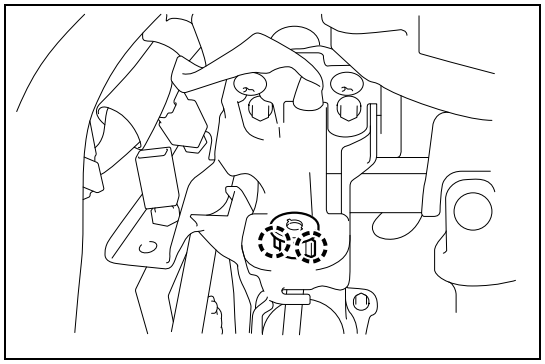

5. Removal of stop light switch mounting adjuster
   (1) Release 2 claws and remove the stop light switch mounting adjuster.

Disassembly

1. Removal of brake pedal

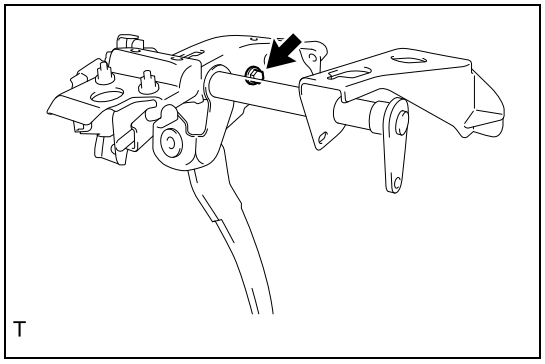

(1) Remove the bolt.

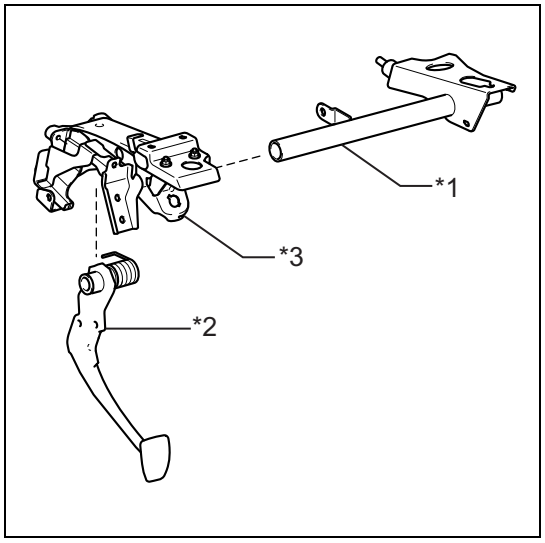

(2) Remove the clutch master cylinder bracket and brake pedal from the brake pedal support SUB-ASSY.

Captions in illustration

*1	Clutch master cylinder bracket
*2	Brake pedal
*3	Brake pedal support ASSY

2. Removal of brake pedal return spring
   (1) Remove the brake pedal return spring from the clutch master cylinder bracket.

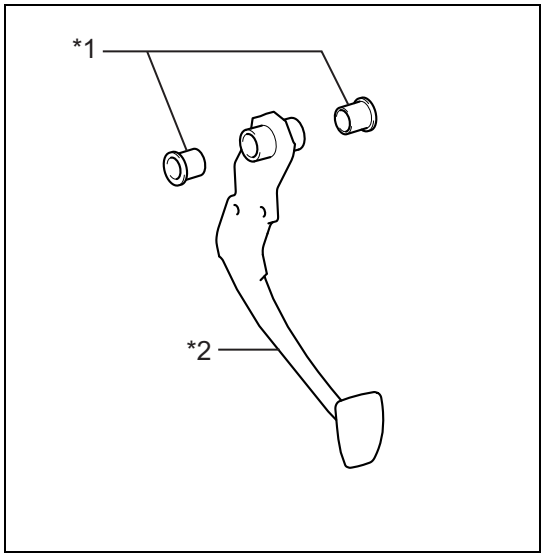

3. Removal of brake pedal bushings
   (1) Remove the brake pedal bushings from the brake pedal.

Captions in illustration

*1	Brake pedal bushing
*2	Brake pedal

Assembly

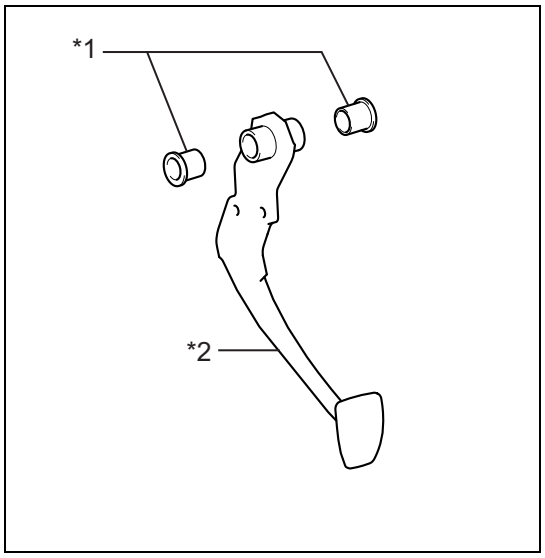

1. Installation of brake pedal bushings
   (1) Install the brake pedal bushings to the brake pedal.

Captions in illustration

*1	Brake pedal bushings
*2	Brake pedal

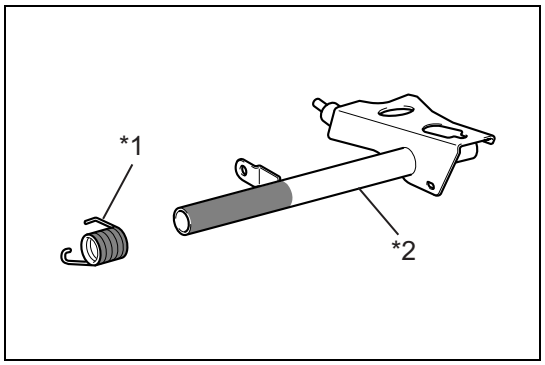

2. Installation of brake pedal
   (1) Apply NIGTIGHT LYW No. 2 or equivalent to the brake pedal return spring and clutch master cylinder bracket.

Captions in illustration

*1	Brake pedal return spring
*2	Clutch master cylinder bracket
	NIGTIGHT LYW No.2 or equivalent

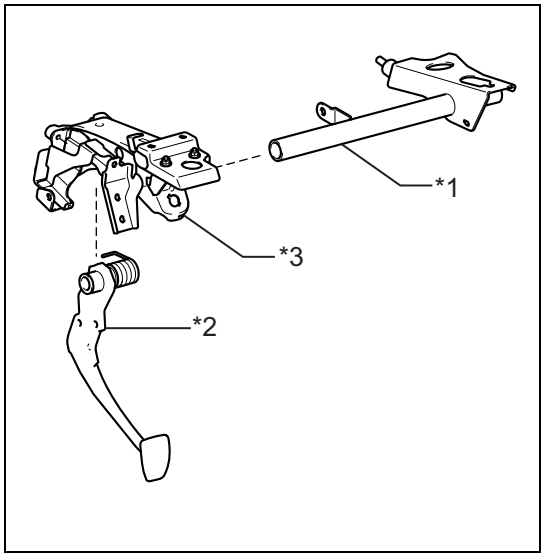

(2) Install the clutch master cylinder bracket and brake pedal to the brake pedal support SUB-ASSY.

Captions in illustration

*1	Clutch master cylinder bracket
*2	Brake pedal
*3	Brake pedal support SUB-ASSY

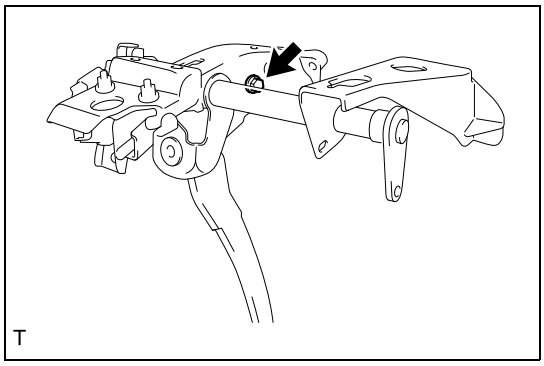

(3) Install the bolt.
Standard value:T=18N·m {184kgf·cm} {13.3ft·lbf}

Installation

1. Installation of stop light switch mounting adjuster
   (1) Engage 2 clamps, and install the stop light switch mounting adjuster.
2. Brake pedal height check ·adjustment (Refer to BR - 18)
3. Brake pedal free play check (Refer to BR - 19)
4. Brake pedal clearance check (Refer to BR - 19)
5. Installation of stop light switch ASSY (Refer to LE - 79)
6. Installation of instrument panel under cover SUB-ASSY No.1 (Refer to ME - 69)
7. Installation of instrument side panel LH (Refer to IT - 29)
8. Installation of clutch pedal SUB-ASSY (Refer to CL - 10)

Adjustment

1. Brake pedal height check ·adjustment (Refer to BR - 18)
2. Brake pedal free play check (Refer to BR - 19)
3. Brake pedal clearance check (Refer to BR - 19)

Brake master cylinder ASSY

Exploded view

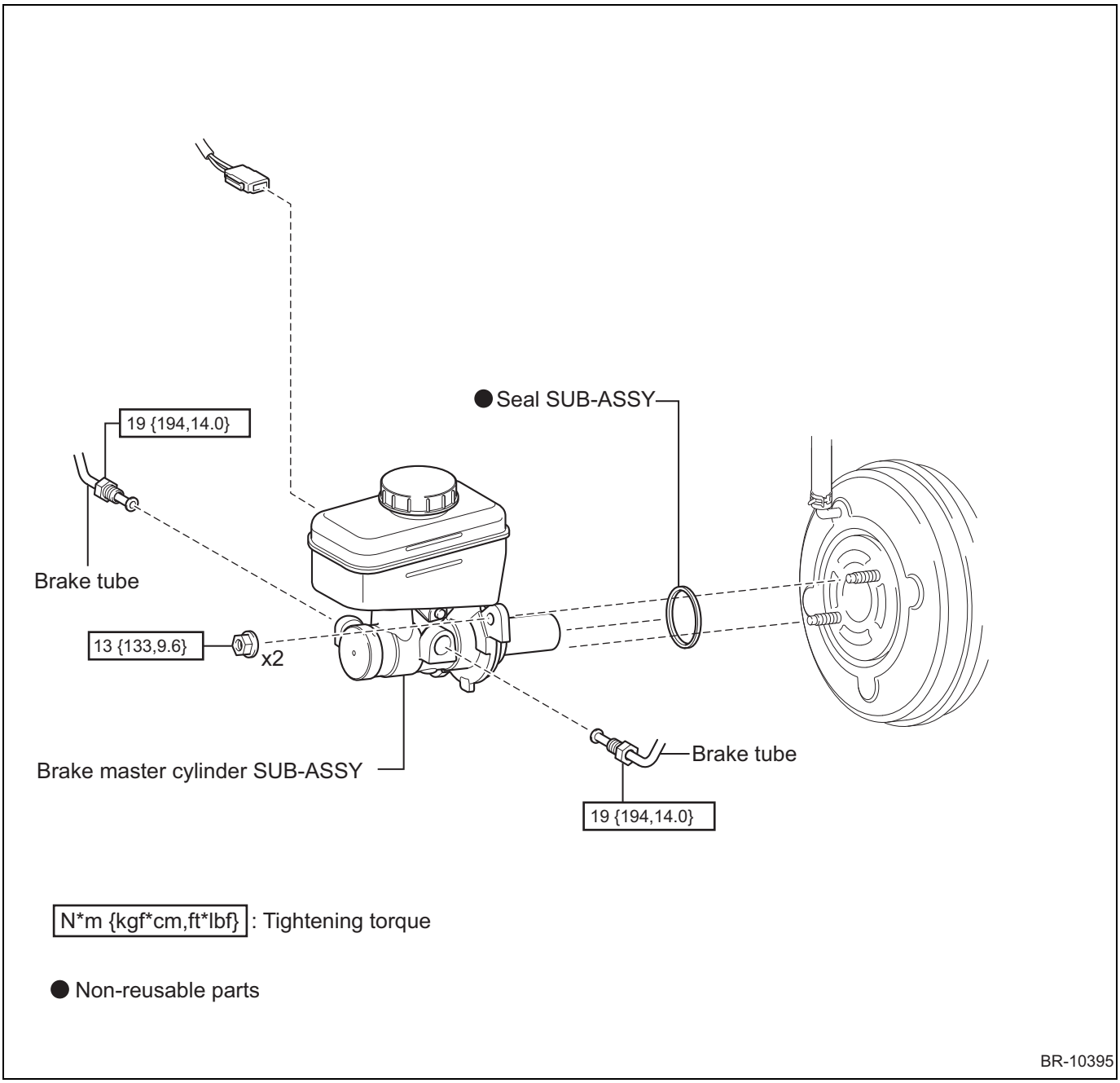

Removal

1. Removal of front tire LH
2. Draining of brake fluid
   CAUTION:
   Do not let brake fluid come into contact with the painted surface. If it happens, wash it out immediately.
3. Removal of front upper suspension-to-cowl brace SUB-ASSY LH (Refer to FP - 4)
4. Removal of brake master cylinder SUB-ASSY
   (1) Operate the brake pedal more than several times and release the vacuum pressure from the brake booster.
   (2) Disconnect the brake fluid level warning switch connector from the reservoir.

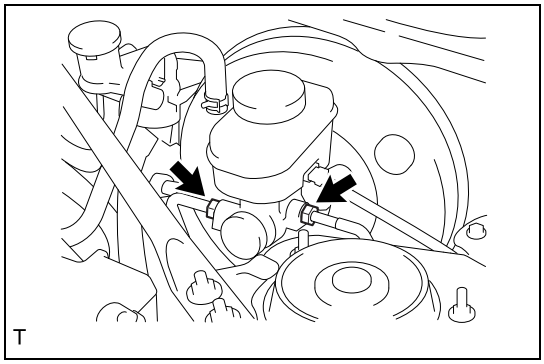

(3) Using a flare-nut wrench, disconnect 2 brake tubes from the master cylinder SUB-ASSY.

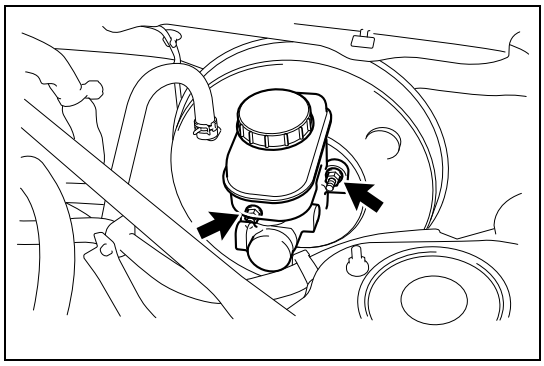

(4) Remove 2 nuts, and disconnect the brake master cylinder SUB-ASSY.
CAUTION:
- The piston comes off from the brake master cylinder SUB-ASSY easily. Therefore, do not hold or pull out the piston. If the piston comes off the brake master cylinder SUB-ASSY, do not reuse it but replace the brake master cylinder SUB-ASSY with new one, because the brake master cylinder SUB-ASSY may malfunction
- Do not give a shock to the piston of the brake master cylinder SUB-ASSY, fix it with a vise, or scratch it.
- Remove the brake master cylinder SUB-ASSY after operating the brake pedal several times and releasing the vacuum pressure from the brake booster.
- Do not tilt the brake master cylinder SUB-ASSY's piston side below a horizontal position.
- Be careful not to allow foreign matter to stick to the piston of the brake master cylinder SUB-ASSY. If a foreign matter sticks to the piston, remove the foreign matter with a cloth and apply rubber grease all around the outer surface of the piston (sliding part).
- Do not use undesignated oil.

5. Removal of seal SUB-ASSY
   (1) Remove the seal sub ASSY.

Installation

1. Installation of seal SUB-ASSY
   (1) Install a new seal SUB-ASSY.
2. Installation of brake master cylinder SUB-ASSY
   (1) Install the brake master cylinder SUB-ASSY with 2 nuts.
   Standard value:T=13N·m {133kgf·cm} {9.6ft·lbf}
   (2) Using a union nut wrench 12, connect 2 brake tubes to the brake master cylinder SUB-ASSY.
   Standard value:T=19N·m {194kgf·cm} {14.0ft·lbf}
   (3) Connect the brake fluid level warning switch connector.
3. Brake fluid refill (Refer to BR - 8)
4. Air bleeding of brake master cylinder SUB-ASSY (Refer to BR - 9)
5. Air bleeding of brake system (Refer to BR - 10)
6. Brake fluid leak check
7. Brake fluid level check (Refer to BR - 12)
8. Installation of front upper suspension-to-cowl brace SUB-ASSY RH (Refer to FP - 5)
9. Installation of front tire LH
   Standard value:T=120N·m {1224kgf·cm} {88.5ft·lbf}

Brake booster ASSY

Exploded view

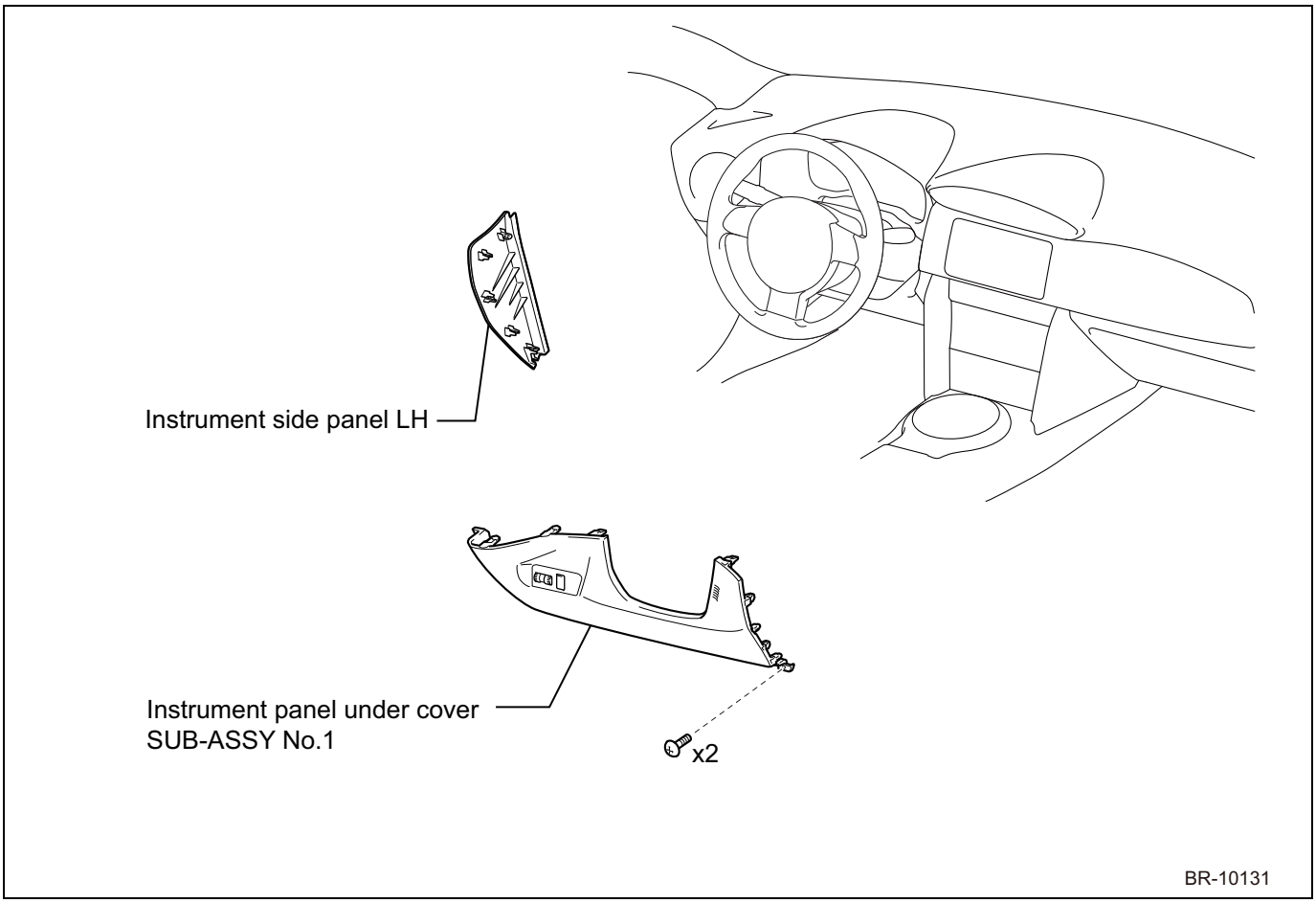

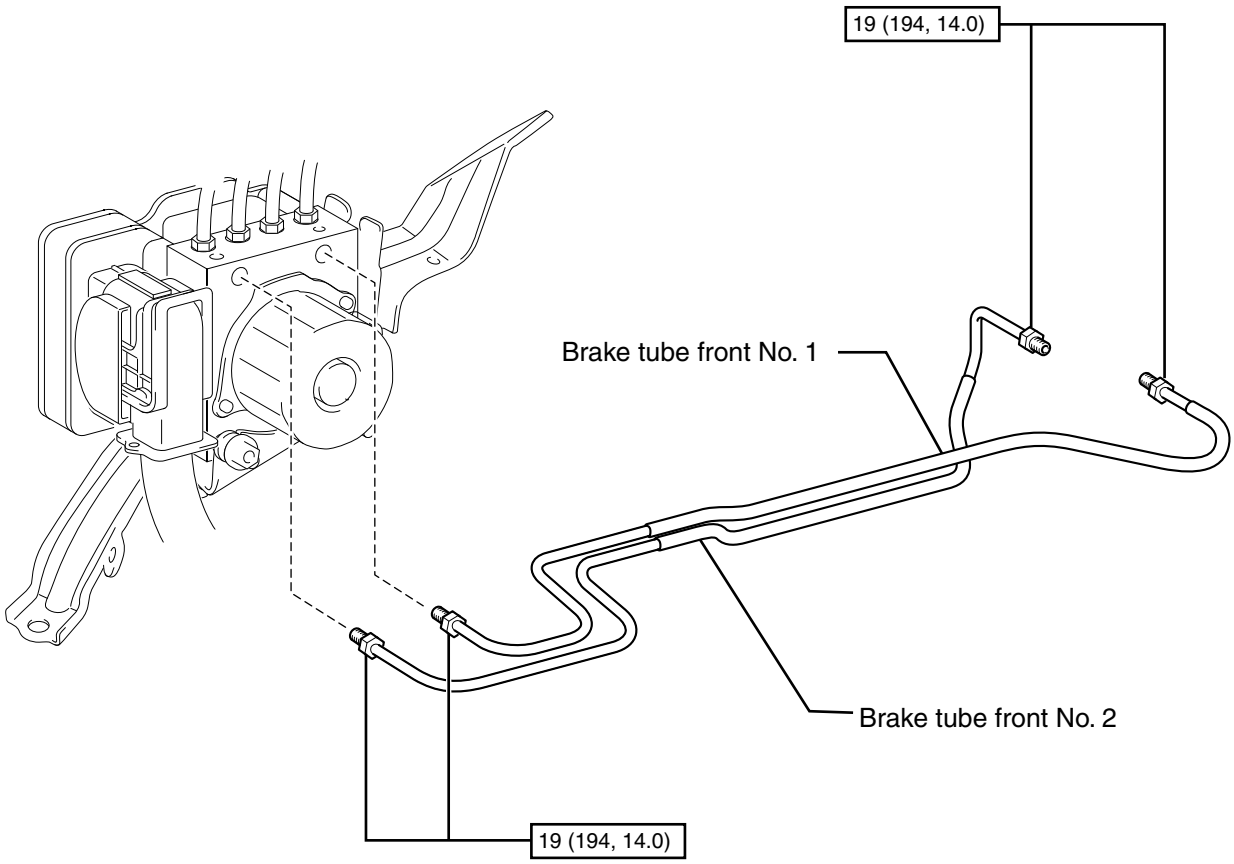

N•m {kgf•cm, ft•lbf} : Tightening torque

BR-01121

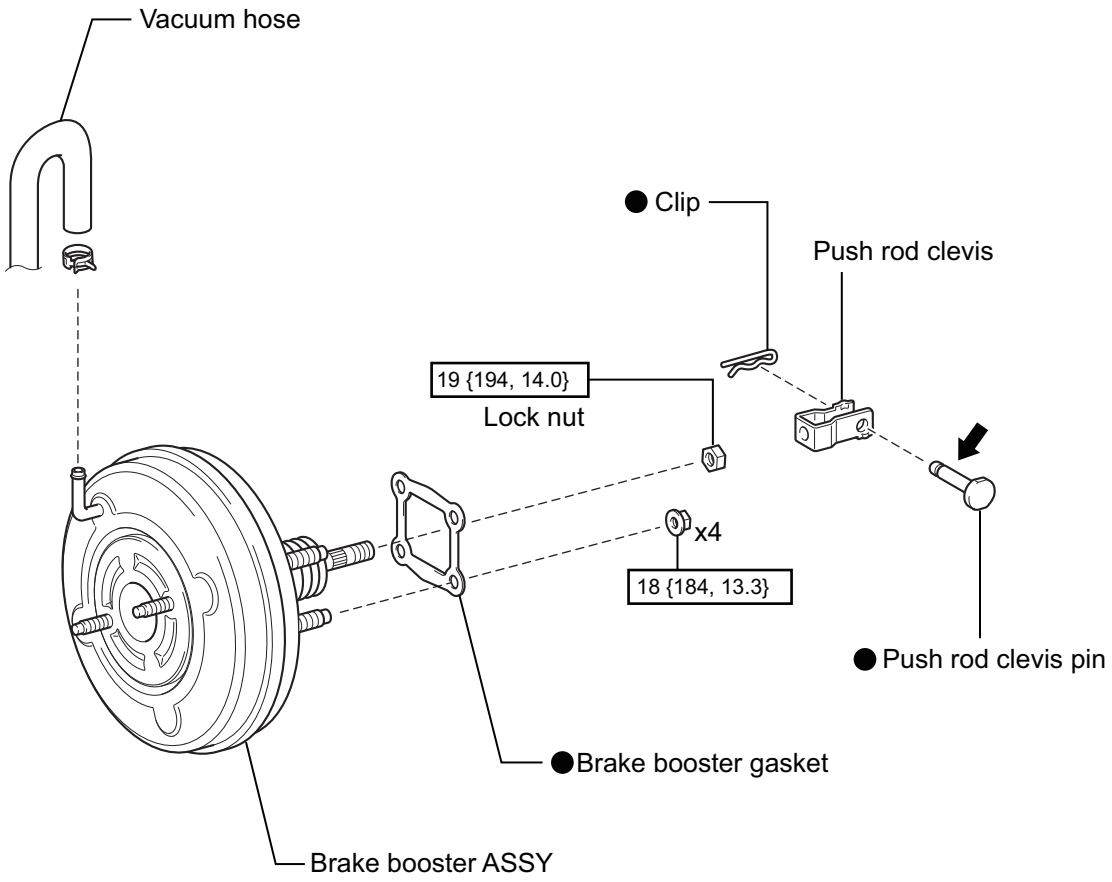

N*m {kgf*cm, ft*lbf}: Tightening torque

● Non-reusable part

⬅ NIGTIGHT LYW No.2 or equivalent

BR-01174

BR

Removal

1. Removal of instrument side panel LH (Refer to IT - 24)
2. Removal of instrument panel under cover SUB-ASSY No.1
3. Removal of transmission control computer ASSY (Refer to AT - 323)
4. Removal of brake master cylinder SUB-ASSY (Refer to BR - 24)
5. Disconnection of vacuum hose
   (1) Slide the clip and disconnect the vacuum hose from the brake booster ASSY.

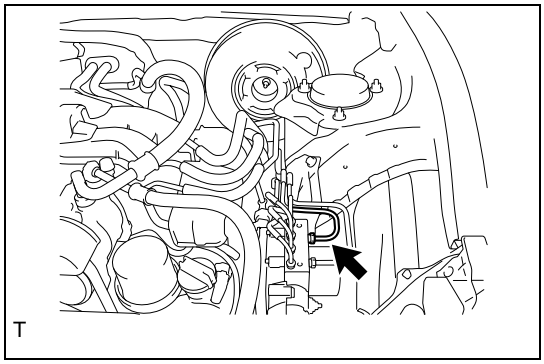

6. Removal of the brake tube front No. 1
   (1) Using a flare-nut wrench, disconnect the brake tube front No. 1 from the brake actuator.

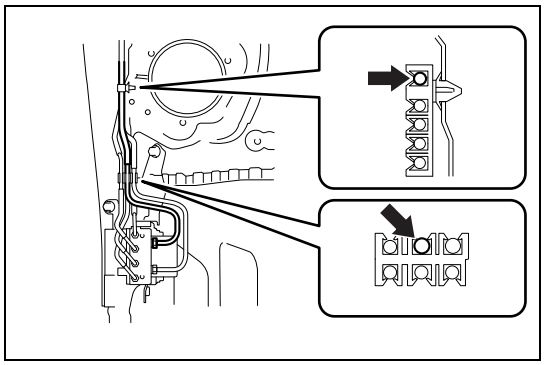

   (2) Release 2 clips and remove the brake tube front No. 1.

7. Removal of the brake tube front No. 2

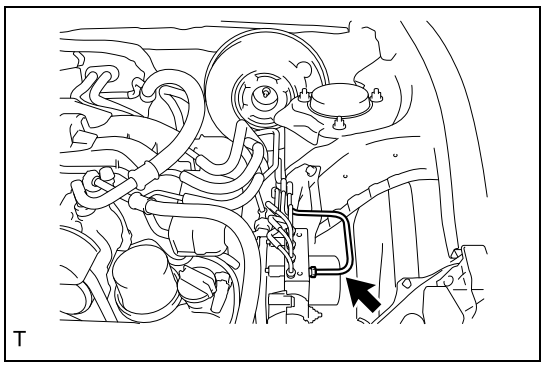

   (1) Using a flare-nut wrench, disconnect the brake tube front No. 2 from the brake actuator.

   (2) Release 2 clips and remove the brake tube front No. 2.

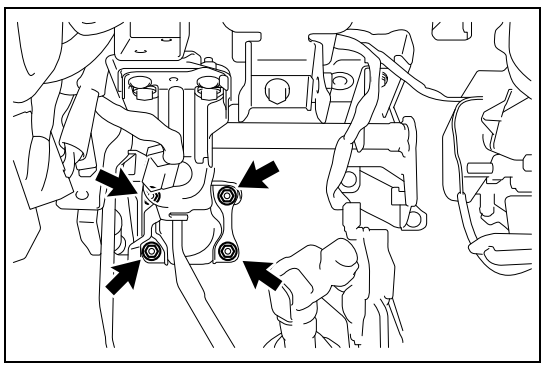

8. Removal of brake booster ASSY
   (1) Remove 4 nuts.

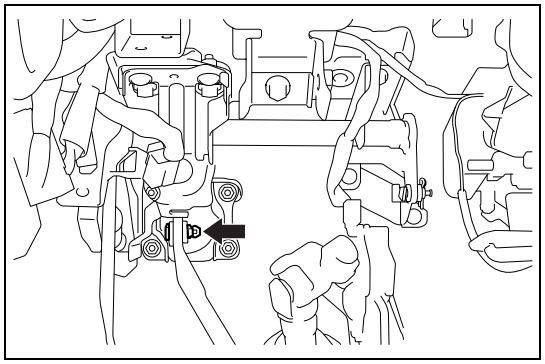

(2) Remove the push rod clevis.
(3) Remove the brake booster ASSY.

Installation

1. Installation of brake booster ASSY
   (1) Temporarily attach the push rod clevis with a lock nut.

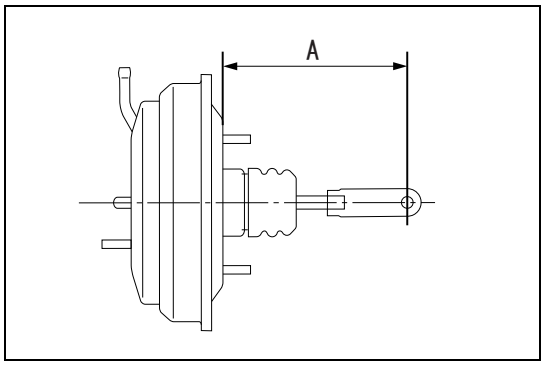

   (2) Measure the length between the vacuum booster assembly mounting surface and clevis pin hole.
   Standard value (A): 155.2 mm {6.11 in}
   NOTE:
   If it is not within the specification, loosen the lock nut, rotate the vacuum booster operating rod to perform adjustment.
   (3) Tighten the lock nut securely.
   Standard value:T=19N·m {194kgf·cm} {14.0ft·lbf}
   (4) Install the brake booster ASSY with 4 nuts.
   Standard value:T=18N·m {184kgf·cm} {13.3ft·lbf}
2. Installation of brake tube front No. 2
   (1) Engage 2 clips, and install the brake tube front No. 2.
   (2) Using a flare-nut wrench, connect the brake tube front No. 2 to the brake actuator.
   Standard value:T=19N·m {194kgf·cm} {14.0ft·lbf}
   CAUTION:
   - Do not bend or damage the brake tubes.
   - When installing the brake tube, make sure that they are not twisted or bent.
   - Do not let foreign matter including dirt and dust enter the brake tube.
3. Installation of brake tube front No. 1
   (1) Engage 2 clips, and install the brake tube front No. 1.
   (2) Using a flare-nut wrench, connect the brake tube front No. 1 to the brake actuator.
   CAUTION:
   - Do not bend or damage the brake tubes.
   - When installing the brake tube, make sure that they are not twisted or bent.
   - Do not let foreign matter including dirt and dust enter the brake tube.

BR

4. Installation of vacuum hose
   (1) Attach the vacuum hose with the clamp.
5. Installation of push rod pin (Refer to BR - 17)
6. Installation of transmission control ASSY (Refer to AT - 323)
7. Installation of instrument panel under cover SUB-ASSY No.1 (Refer to ME - 69)
8. Installation of instrument side panel LH (Refer to IT - 29)
9. Brake fluid refill (Refer to BR - 8)
10. Air bleeding of brake master cylinder SUB-ASSY (Refer to BR - 9)
11. Air bleeding of brake system (Refer to BR - 10)

12. Brake fluid leak check
13. Brake fluid level check (Refer to BR - 12)
14. Brake pedal height check ·adjustment (Refer to BR - 18)
15. Brake pedal free play check (Refer to BR - 19)
16. Brake pedal clearance check (Refer to BR - 19)

Unit inspection

1. Brake vacuum check valve ASSY check
   (1) Slide 2 clamps to remove the vacuum hose ASSY.

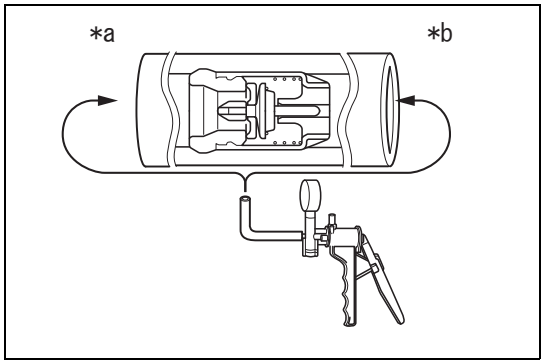

(2) Using vacuum gauge, check that there is a ventilation from the brake booster ASSY to the engine side. Also, check that there is no ventilation from the engine side to the brake booster ASSY side.

Captions in illustration

*a	Booster side
*b	Engine side

NOTE:
If it is faulty, replace the vacuum hose ASSY.

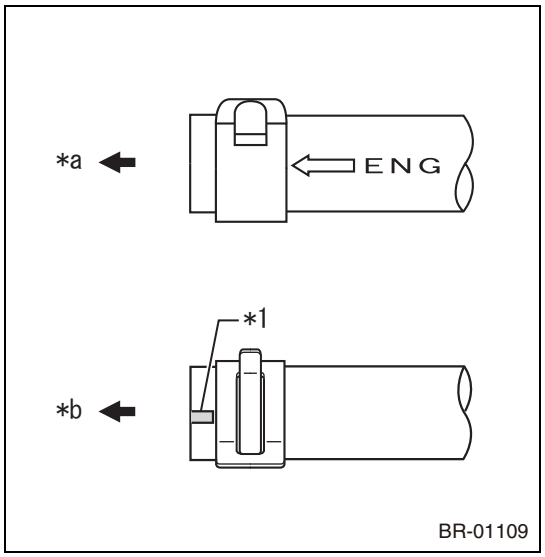

(3) Face the engine stamp to the engine side as shown in the figure, and then install it to the engine side.

Captions in illustration

*1	Paint
*a	Engine side
*b	Booster side

(4) Face the paint to the front side of the vehicle and install it to the brake booster side.
NOTE:
If the paint is worn off, check the ventilation and connect them so that there is a ventilation from the brake booster side to the engine side.
(5) Install the vacuum hose with 2 clamps.

Vacuum pump ASSY

Exploded view

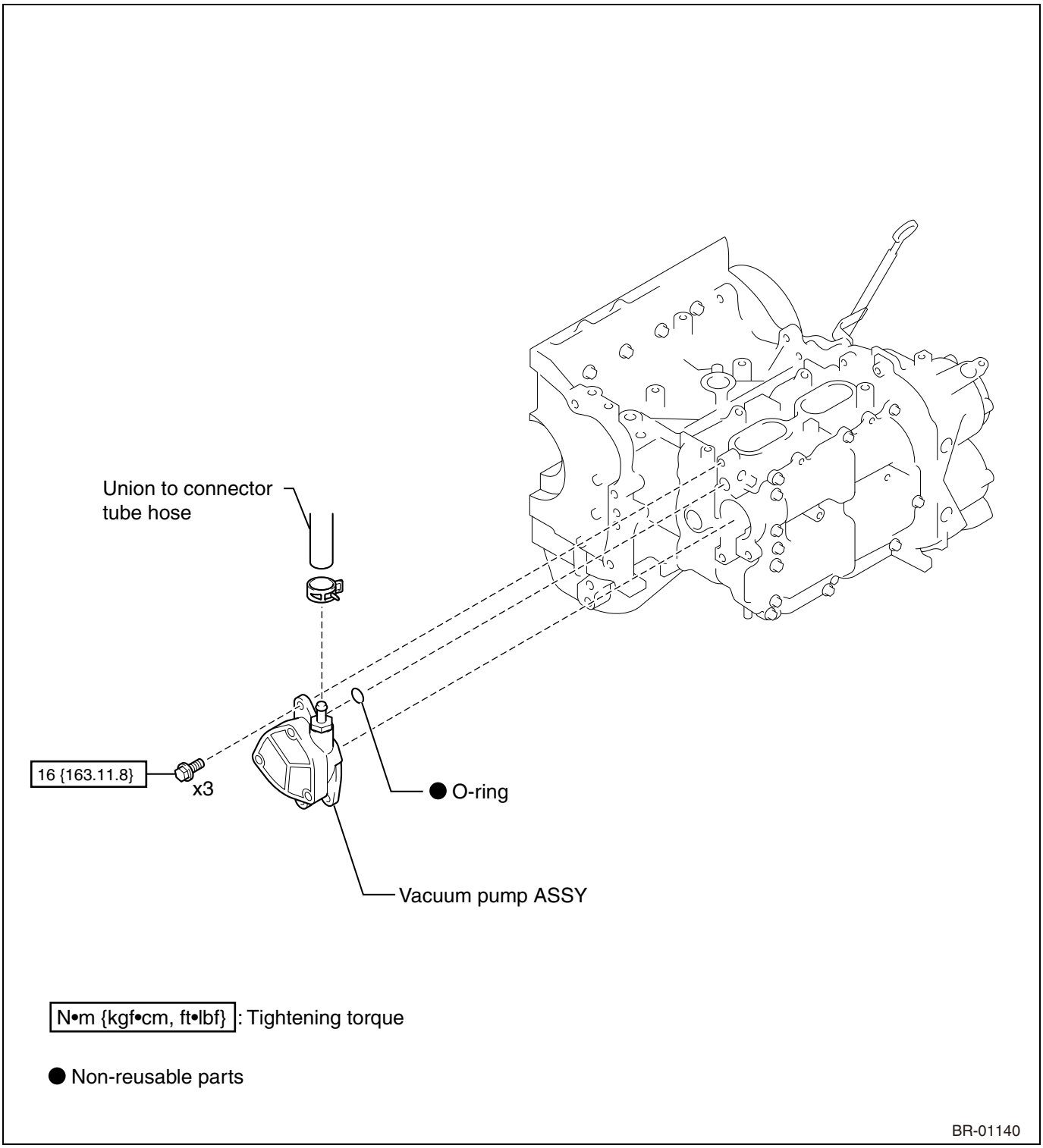

Removal

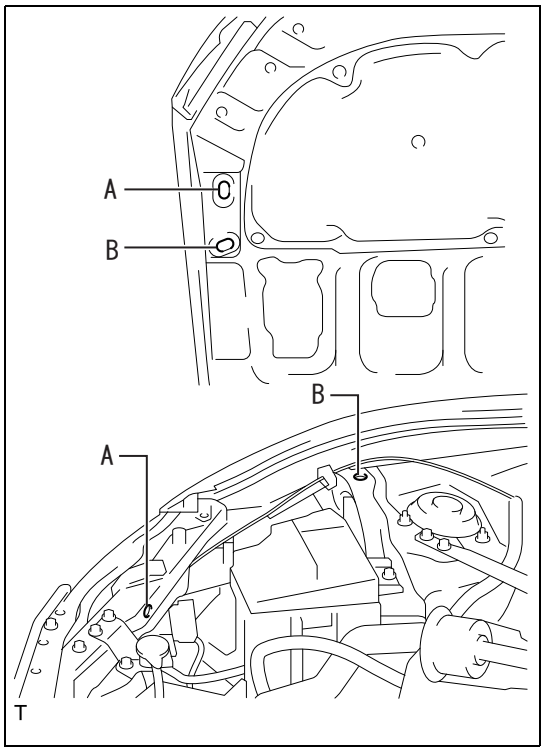

1. Disconnection of the union to connector tube hose
   (1) Change the front hood stay position from A to B, and fully open the front hood.

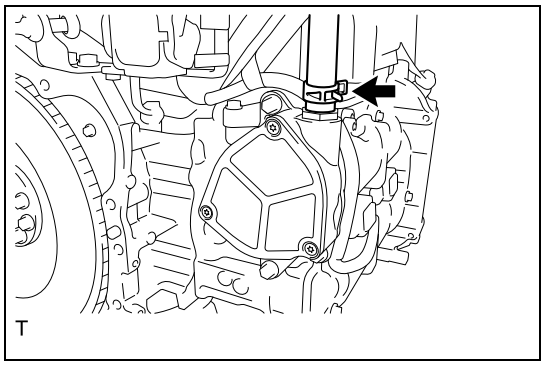

   (2) Slide the clamp and disconnect the union to connector tube hose from the vacuum pump ASSY.

2. Removal of front upper suspension-to-cowl brace SUB-ASSY RH (Refer to FP - 4)

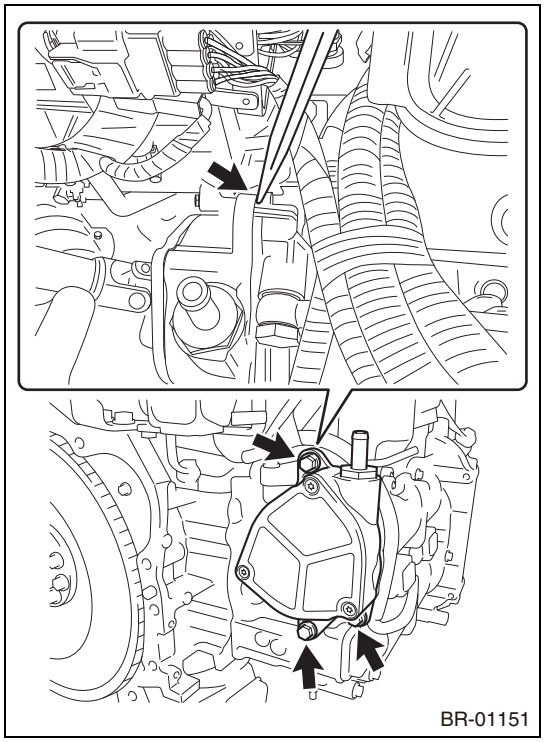

3. Removal of vacuum pump ASSY
   (1) Remove 3 bolts.
   (2) Using a flat tip screwdriver or an equivalent to the position shown in the figure, pry the vacuum pump ASSY to remove it.

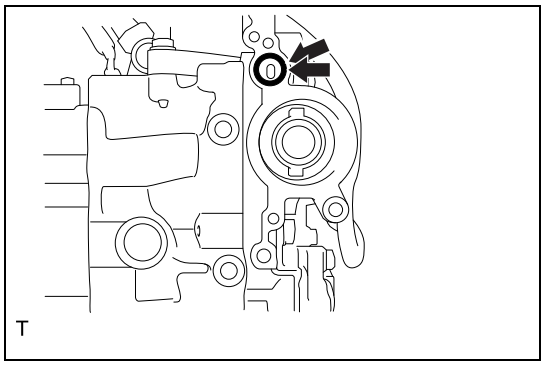

   (3) Remove the O-ring.
   (4) Remove the liquid gasket from the vacuum pump ASSY and the engine unit.

Installation

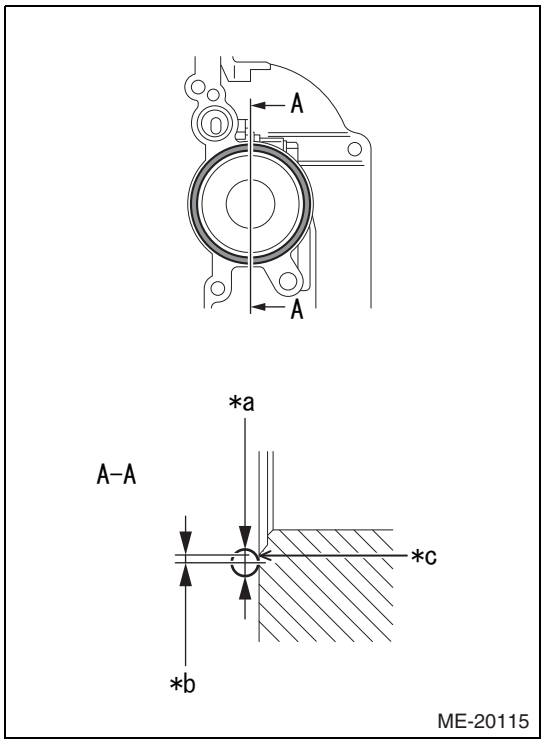

1. Installation of vacuum pump ASSY (transmission A/T)
   (1) As shown in the figure, apply the seal gasket 1217G to the cam carrier RH.

Captions in illustration

*a	Liquid gasket diameter: 2.0-4.0 mm
*b	Within 1.0 mm
*c	Groove end

CAUTION:
- Clean and degrease the installation surface.
- Install within 5 min. after applying liquid gasket.

   (2) Install a new O-ring.

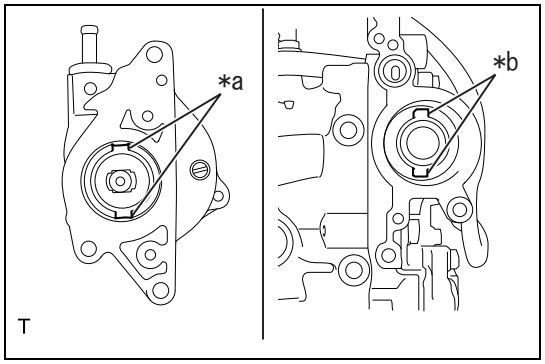

   (3) Align the groove on the vacuum pump ASSY and the claw on the intake camshaft RH.

Captions in illustration

*a	Groove on the vacuum pump ASSY
*b	Claw of the intake camshaft (RH)

CAUTION:
Be careful not to let the O-ring catch.

   (4) Install the vacuum pump ASSY with 3 bolts.
   Standard value:T=16N·m {163kgf·cm} {11.8ft·lbf}

2. Installation of union to connector tube hose
   (1) Install the union to connector tube hose with a clamp.
3. Installation of front upper suspension-to-cowl brace SUB-ASSY RH (Refer to FP - 5)

On-vehicle inspection

NOTE:

Maintenance of the vacuum pump ASSY is scheduled to be done in every 200,000 km (125,000 mile) of drive. Disassemble and check the vacuum pump ASSY in every 200,000 km (125,000 mile) of drive. If necessary, replace the parts. Check the following items.

- Function inspection of vacuum pump ASSY
- Component check

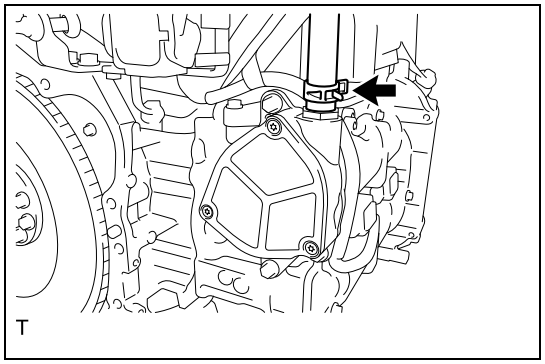
T

1. Function inspection of vacuum pump ASSY
   (1) Slide the clip and disconnect the union to connector tube hose from the vacuum pump ASSY.
   (2) Connect the vacuum gauge hose to the vacuum pump ASSY.
   (3) Use the vacuum gauge in the portable brake tester.
   (4) Plug the hose on the other side of the vacuum gauge with the hose plug No.2.
   (5) Start the engine and warm up for 2 minutes or more.

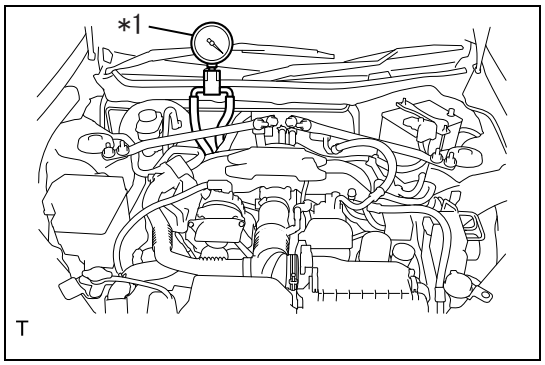

T

   (6) Check the vacuum pressure of the vacuum pump ASSY when the engine is running at idle speed.
   NOTE:
   Read the value after 25 seconds have passed from starting the measurement.

Captions in illustration

*1	Vacuum gauge

   Limit: 93 kPa {698 mmHg, 13.5 psi}
   (7) If the value is below the limit, replace the vacuum pump ASSY. (Refer to BR - 33)
   NOTE:
   - Maintenance of the vacuum pump ASSY is scheduled to be done in every 200,000 km (125,000 mile) of drive. Check the vacuum pump ASSY in every 200,000 km (125,000 mile) of drive. If necessary, replace the parts. (Refer to BR - 33)
   - After replacing the vacuum pump ASSY, perform function inspection of the vacuum pump ASSY.
   (8) Remove the vacuum gauge.
   (9) Connect the union to connector tube hose to the vacuum pump ASSY with a clip.

Front brake

Front brake

Exploded view FB-2
Removal (normal type). FB-5
Removal (brembo type) FB-8
Disassembly (normal type) FB-9
Disassembly (brembo type) FB-10
Inspection. FB-11
Assembly (normal type) FB-12
Assembly (brembo type) FB-13
Installation (normal type) FB-14
Installation (brembo type) FB-17

Front brake flexible hose

Exploded view FB-19
Removal. FB-19
Installation FB-20

Front brake

Exploded view

Normal type

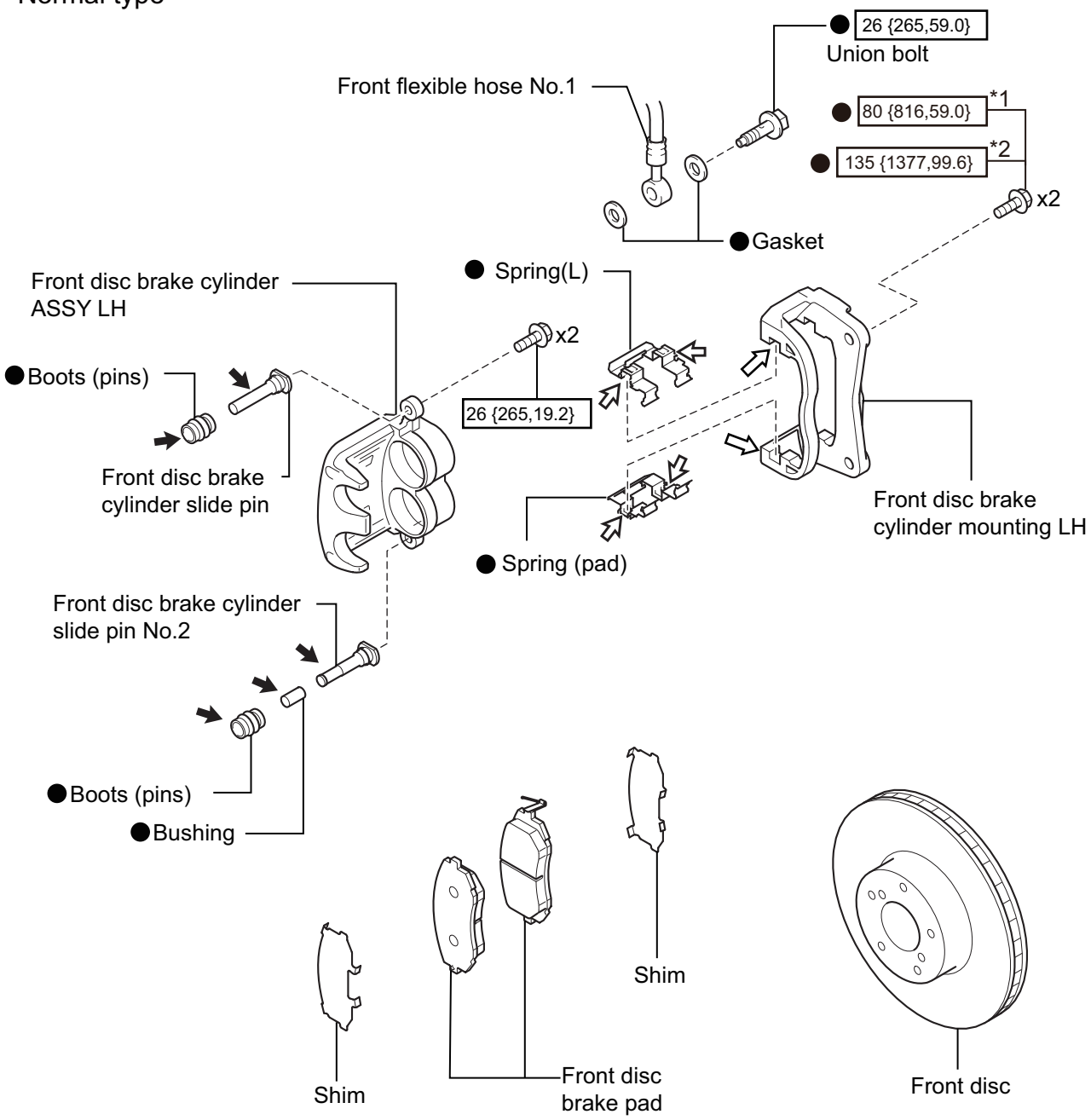

FB

N*m {kgf*cm,ft*lbf} : Tightening torque

● Non-reusable parts

*1: Width across flat 17 mm {0.6693 in}
*2: Width across flat 19 mm {0.748 in}

⬅ Rubber grease (NIGLUBE RX-2) or equivalent

⇦ MP grease No.2 or equivalent

BR-10630

Brembo type

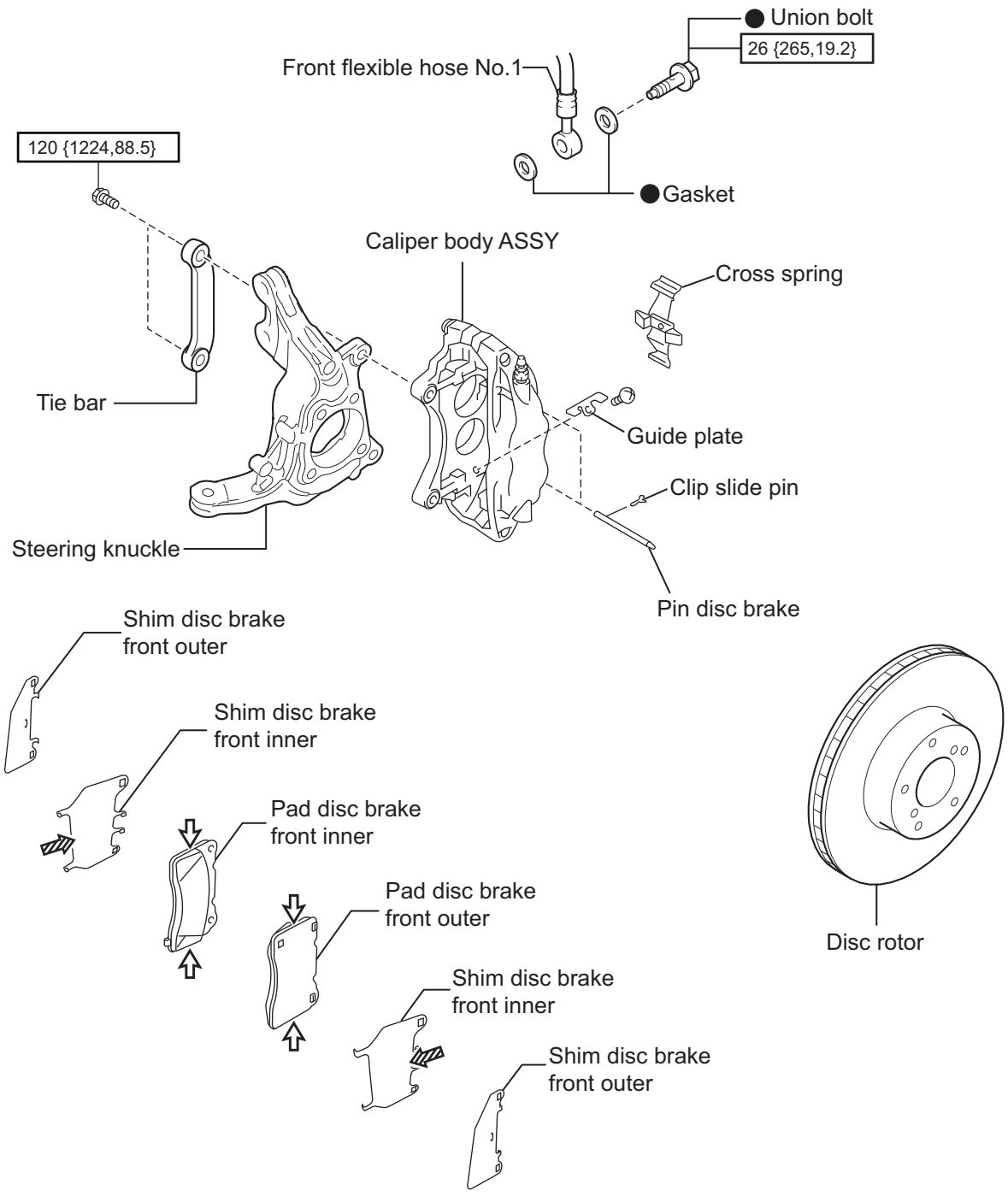

N*m {kgf*cm,ft*lbf} : Tightening torque

● Non-reusable parts

Disc brake grease II or equivalent

MP grease No.2 or equivalent

BR-10393

FB

Normal type

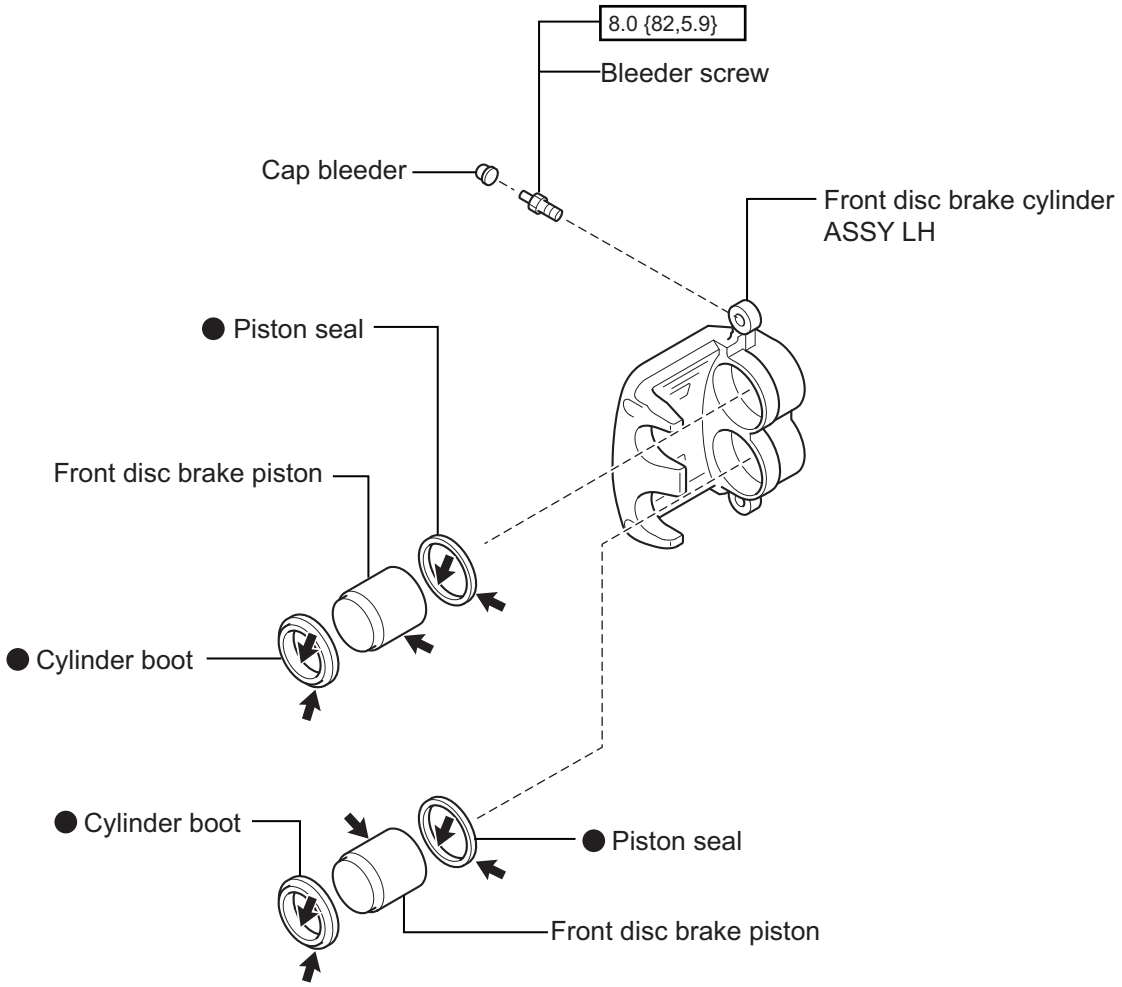

N*m {kgf*cm,ft*lbf} : Tightening torque

⬅ Rubber grease (RENOLIT rubber grease JP) or equivalent

● Non-reusable parts

BR-10397

Brembo type

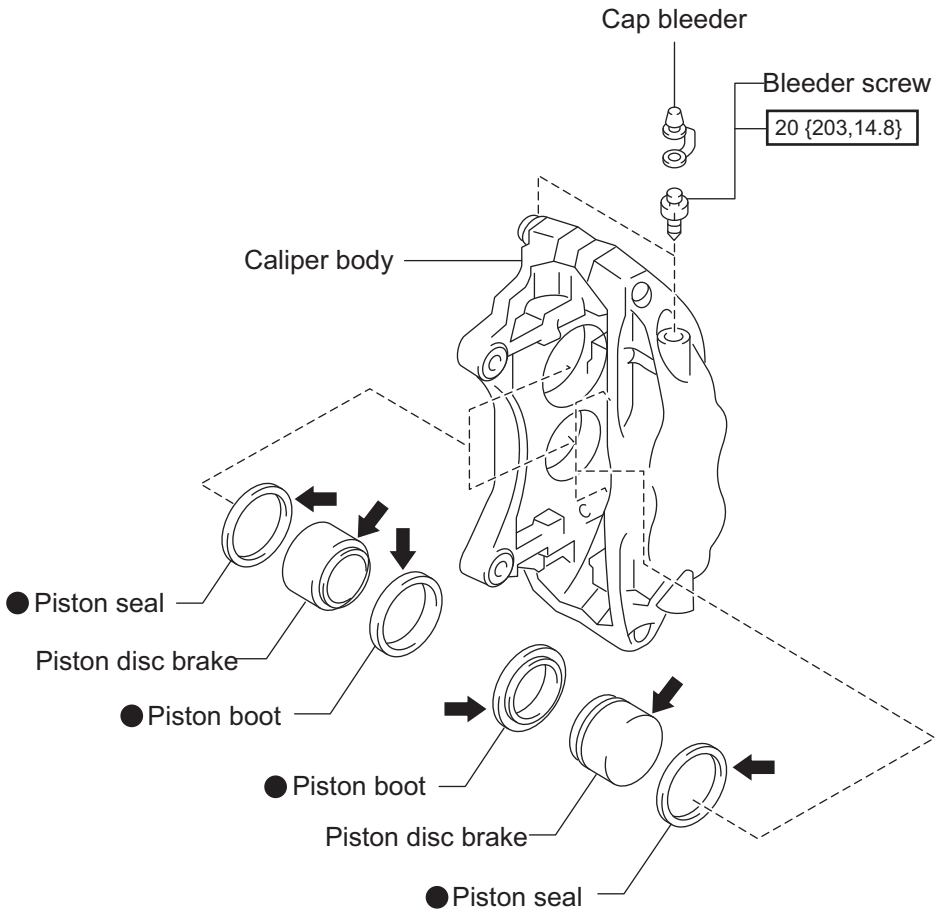

N*m {kgf*cm,ft*lbf} : Tightening torque

⬅ Rubber grease (RENOLIT rubber grease JP) or equivalent

● Non-reusable parts

BR-10398

Removal (normal type)

NOTE:

- The following procedure is for LH side.
- Service the LH side and the RH side using the same procedure.

1. Removal of front tire
2. Draining of brake fluid

   CAUTION:

   Do not let brake fluid come into contact with the painted surface. If it happens, wash it out immediately.

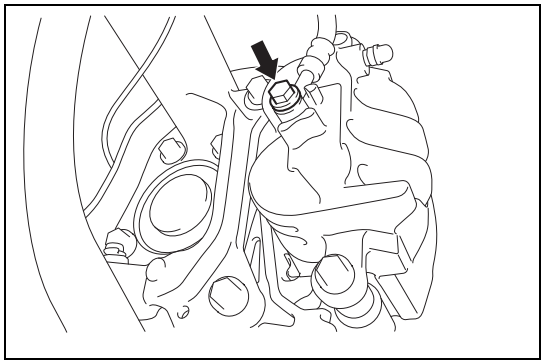

3. Disconnection of front flexible hose No.1
   (1) Remove a union bolt and 2 gaskets to disconnect the front flexible hose No.1 from the front disk brake cylinder ASSY LH.

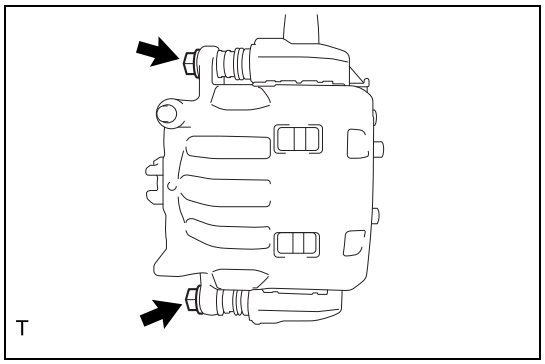

4. Removal of front disc brake cylinder ASSY LH
   (1) Remove 2 bolts and then remove the front disc brake cylinder ASSY LH.

5. Removal of front disc brake pad
   (1) Remove the disc brake pad from the front disc brake cylinder mounting LH.
   (2) Remove the shim from each pad.

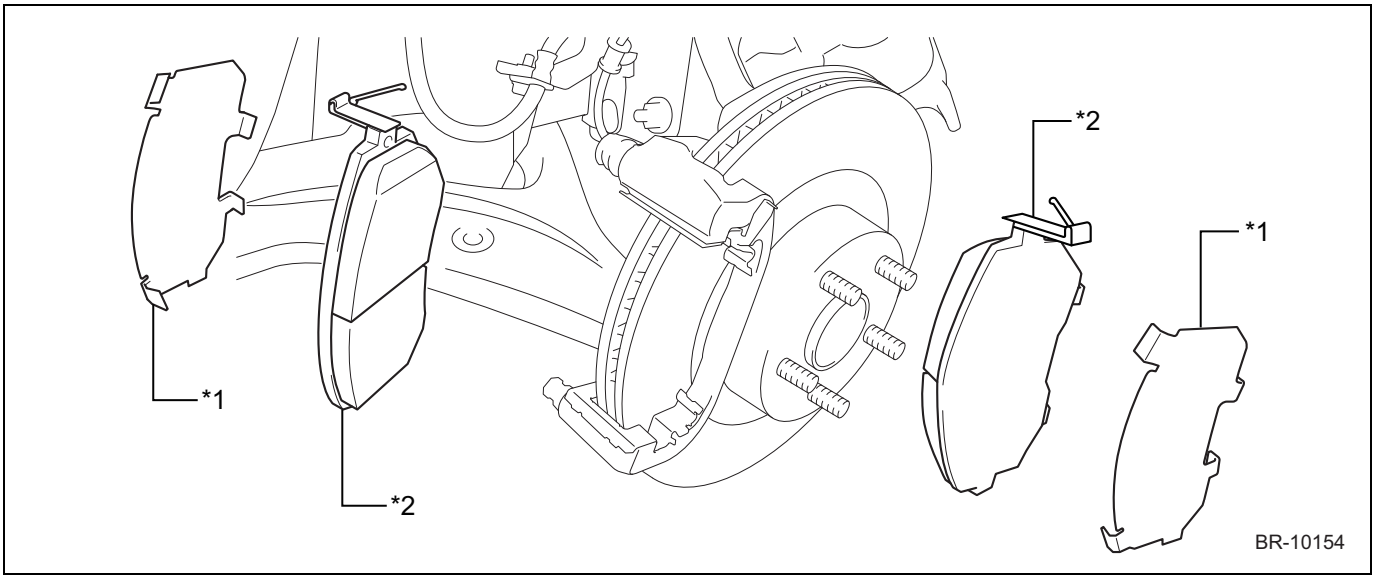

Captions in illustration

*1	Shim	*2	Disc brake pad

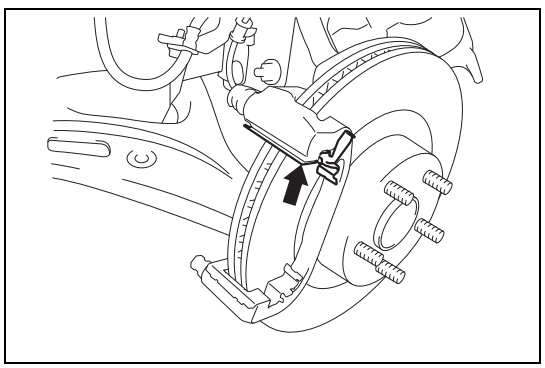

6. Removal of spring (L)
   (1) Remove the spring (L) from the front disc brake cylinder mounting LH.

FB

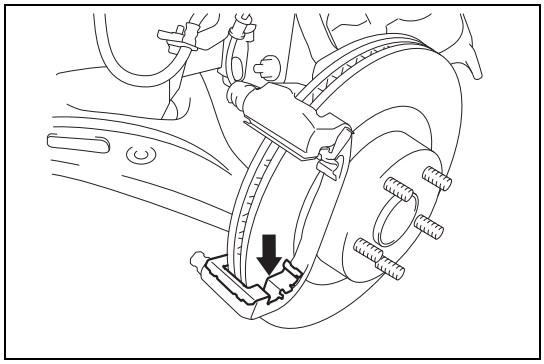

7. Removal of spring (pad)
   (1) Remove the spring (pad) from the front disc brake cylinder mounting LH.

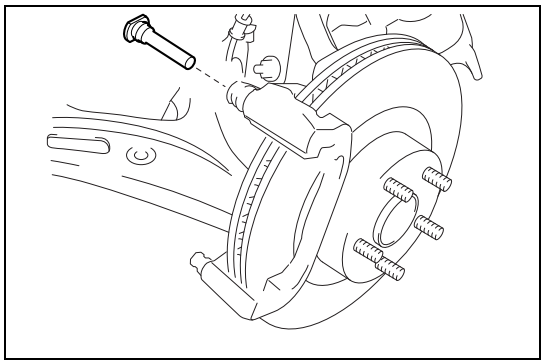

8. Removal of front disc brake cylinder slide pin
   (1) Remove the front disc brake cylinder slide pin from the front disc brake cylinder mounting LH.

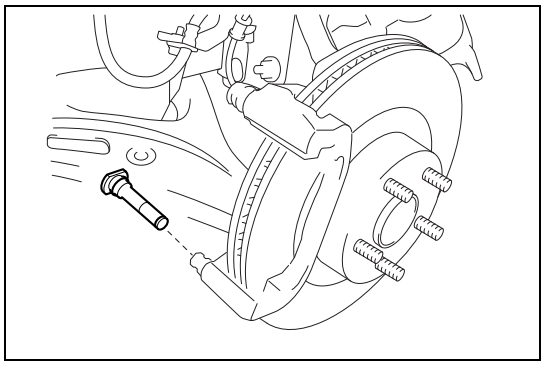

9. Removal of front disc brake cylinder slide pin No.2
   (1) Remove the front disc brake cylinder slide pin No.2 from the front disc brake cylinder mounting LH.

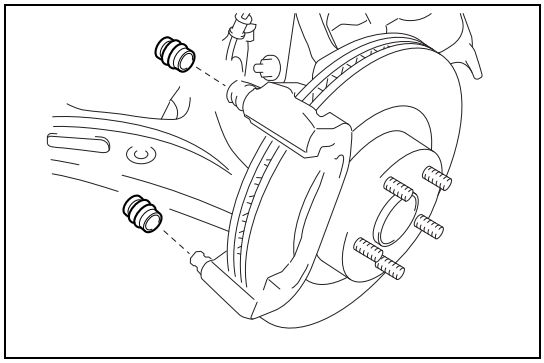

10. Removal of boot (pin)
    (1) Remove the boot (pin) from the front disc brake cylinder mounting LH.

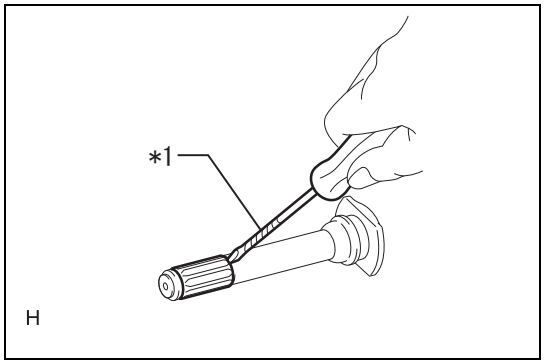

11. Removal of bushing
    (1) Using a thin flat tip screwdriver wrapped with a protective tape, remove the bushing from the pin (B).

Captions in illustration

*1	Protective tape

FB

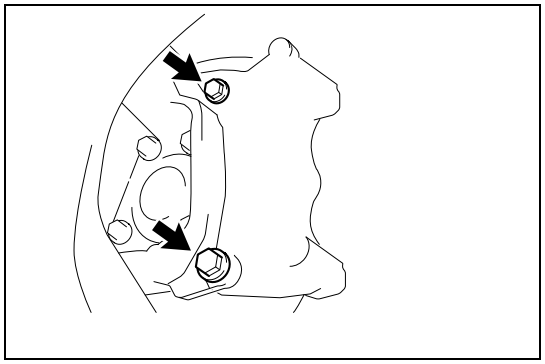

12. Removal of front disc brake cylinder mounting LH
    (1) Remove 2 bolts and then the front disc brake cylinder mounting LH.

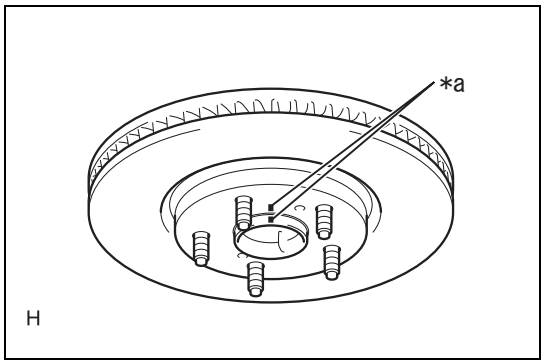

13. Removal of front disc
    (1) Put alignment marks on the front disc and front axle hub. (It is not necessary when replacing the disc).

Captions in illustration

*a	Alignment marks

    (2) Remove the front disc.

Removal (brembo type)

NOTE:

- The following procedure is for LH side.
- Service the LH side and the RH side using the same procedure.

1. Removal of front tire
2. Draining of brake fluid
   CAUTION:
   Do not let brake fluid come into contact with the painted surface. If it happens, wash it out immediately.

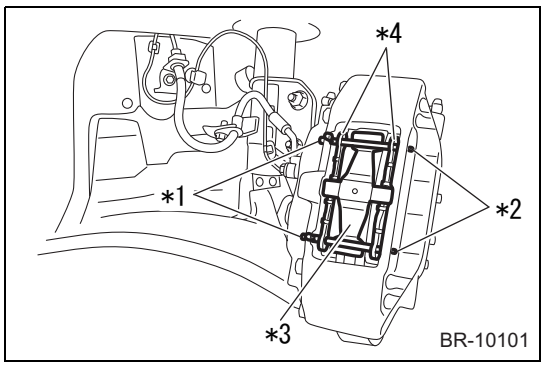

3. Removal of pad disc brake front
   (1) Remove the clip slide pin, and remove the pin disc brake and cross spring.
   (2) While pushing back the piston using a wrench, remove the pad disc brake front.

Captions in illustration

*1	Clip slide pin
*2	Pin disc brake
*3	Cross spring
*4	Pad disc brake

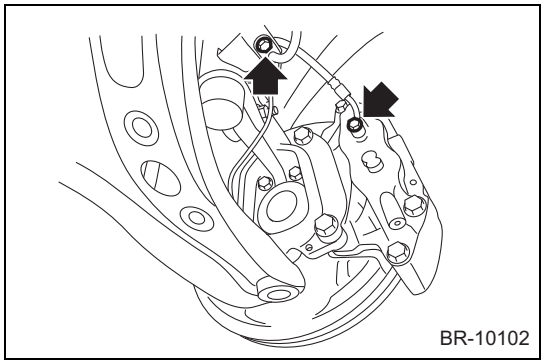

4. Disconnection of front flexible hose No.1
   (1) Remove the union bolt and 2 gaskets, and then remove the front flexible hose No. 1 from the caliper body ASSY.

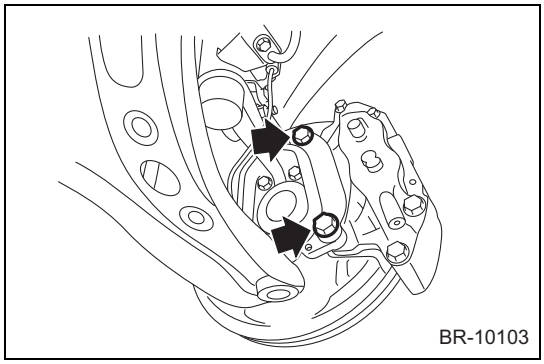

5. Removal of caliper body ASSY
   (1) Remove the 2 bolts, and remove the caliper body ASSY and tie bar.
   NOTE:
   If it is hard to be removed, use the SST.
   SST 09961-01270

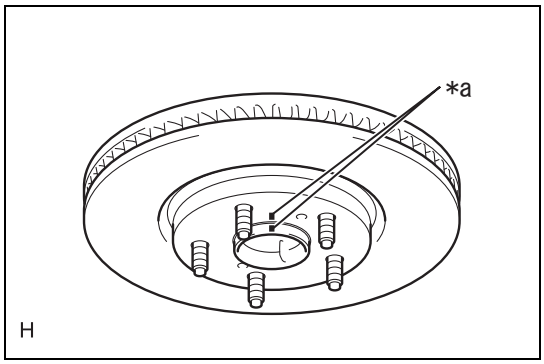

6. Removal of disc rotor
   (1) Put alignment marks on the disc rotor and front axle hub. (It is not necessary when replacing the disc).

Captions in illustration

*a	Alignment marks

   (2) Remove the disc rotor.

Disassembly (normal type)

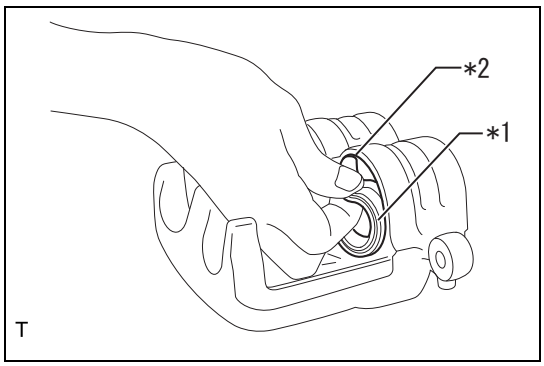

1. Removal of cylinder boot
   (1) Remove 2 cylinder boots.
   CAUTION:
   To prevent the front disc brake piston from being scratched, always remove the boot with hands without using a tool like a screwdriver.

Captions in illustration

*1	Cylinder boot
*2	Front disc brake piston

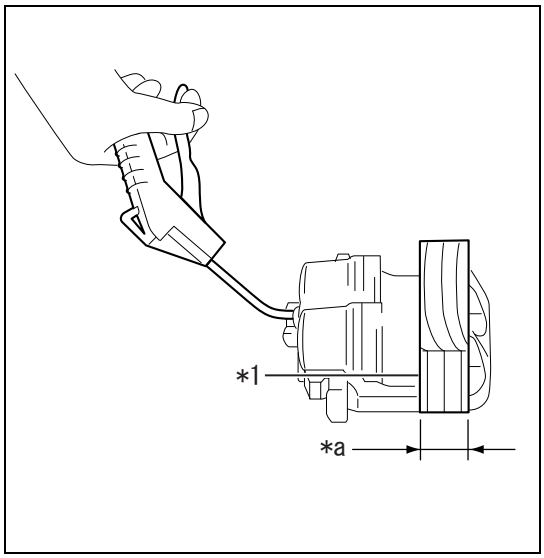

2. Removal of front disc brake piston
   (1) Put a wooden block between the pistons of the cylinder ASSY to prevent the pistons from popping out.

Captions in illustration

*1	Wooden block
*a	30mm {1.181in}

   (2) Using an air gun, gradually blow air into the applicable part to remove the 2 front disc brake pistons from the cylinder.
   WARNING:
   Be careful not to pinch your fingers.
   CAUTION:
   Be careful not to spill brake fluid.
   NOTE:
   Replace the front disc brake cylinder ASSY, if the front disc brake piston is damaged.
   (3) Remove the wooden block.

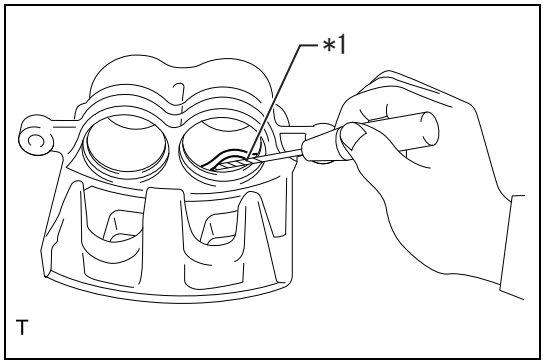

3. Removal of piston seal
   (1) Using a thin flat tip screwdriver, remove 2 piston seals from the cylinder ASSY.
   NOTE:
   Wrap the tip of the thin flat tip screwdriver with a protective tape.

Captions in illustration

*1	Protective tape

   CAUTION:
   Do not damage inside the cylinder and the seal groove.

4. Removal of cap bleeder
   (1) Remove the cap bleeder from the bleeder screw.
5. Removal of bleeder screw
   (1) Remove the bleeder screw.

Disassembly (brembo type)

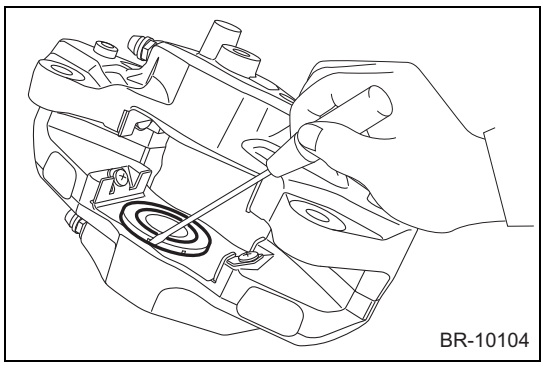

1. Removal of piston boot
   (1) Remove the four piston boots.

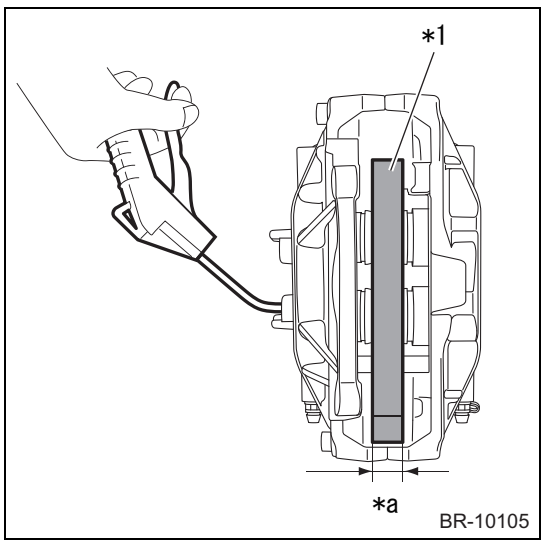

2. Removal of piston disc brake
   (1) Put a wooden block between the pistons of the caliper body to prevent the pistons from popping out.

Captions in illustration

*1	Wooden block
*a	30mm {1.181in}

   (2) Using an air gun, gradually blow air into the applicable part to remove the 4 piston disc brake from the cylinder.
   WARNING:
   Be careful not to pinch your fingers.
   CAUTION:
   Be careful not to spill brake fluid.
   NOTE:
   When the piston disc brake is damaged, replace the caliper body.
   (3) Remove the wooden block.

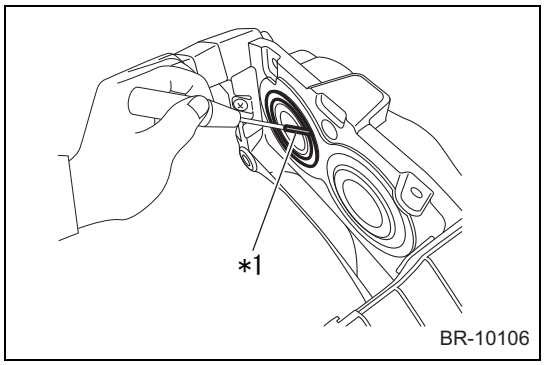

3. Removal of piston seal
   (1) Using a thin flat tip screwdriver, remove the 4 piston seals from the caliper body.
   NOTE:
   Wrap the tip of the thin flat tip screwdriver with a protective tape.

Captions in illustration

*1	Protective tape

   CAUTION:
   Do not damage inside the cylinder and the seal groove.

4. Removal of cap bleeder
   (1) Remove the cap bleeder from the bleeder screw.
5. Removal of bleeder screw
   (1) Remove the bleeder screw.

Inspection

1. Disc brake piston and cylinder check
   (1) Check that there is no damage on the side of the disc brake piston and the cylinder wall.

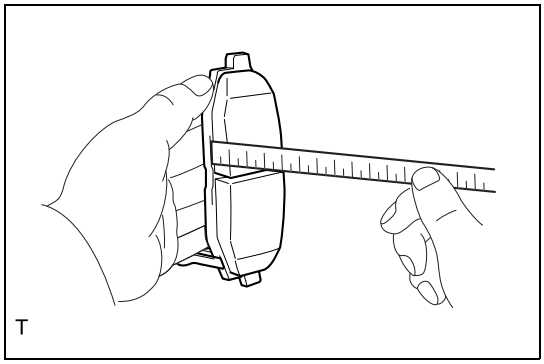
T

2. Disc brake pad thickness check
   - Normal type
     Limit: 1.5mm {0.059in}
     Reference value: : 11.0mm {0.433in} (New)
   - Brembo type
     Limit: 1.2mm{0.047in}
     Reference value: 8.9mm {0.350in}

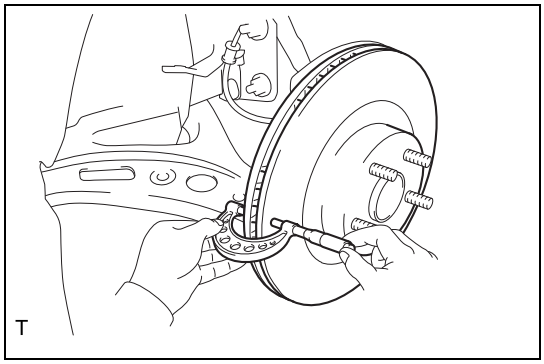
T

3. Front disc thickness check
   - Normal type
     Limit: 22.0mm {0.866in}
     Reference value: : 24.0mm {0.945in} (New)
   - Brembo type
     Limit: 28 mm {1.102 in}
     Reference value: 30mm {1.181in}

4. Disc runout check
   (1) Before checking the disc runout, check the hub & bearing ASSY play (Refer to AD - 8) and runout (Refer to AD - 8).
   (2) Install the front disc to the axle hub and secure it with 5 hub nuts.
   Standard value:T=120N·m {1224kgf·cm} {88.5ft·lbf}

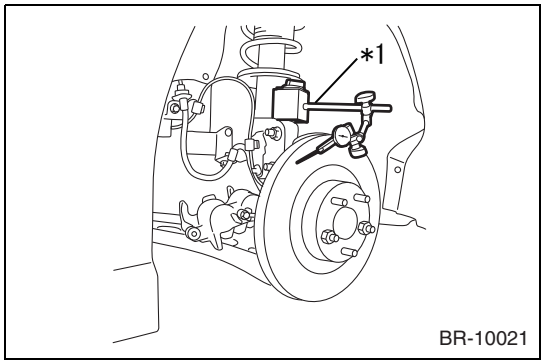

   (3) Using a dial gauge, set at 10 mm {0.394 in} inside from the disc outer periphery to check the front side runout.
   - Normal type
     Limit: 0.05mm {0.002in}
   - Brembo type
     Limit: 0.075mm{0.003in}

Captions in illustration

*1	Dial gauge

CAUTION:
- Do not bring the magnetized part of the dial gauge close to the axle hub or speed sensor.
- Install the dial gauge to the shock absorber.
- When the runout exceeds the limit, change the disc and axle positions to minimize the runout and install them. If the runout still exceeds the limit even after changing the positions, replace the disc with a new one.

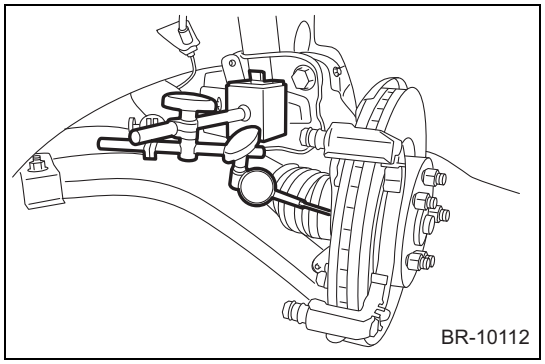

(4) Set the dial gauge at 10 mm {0.394 in} inside from the disc rotor outer periphery, and rotate the disc rotor to check the back side runout.
- Normal type
  Limit: 0.05mm {0.002in}
- Brembo type
  Limit: 0.075mm{0.003in}

NOTE:
<Example of magnet stand and dial gauge installation>

Assembly (normal type)

1. Temporary tightening of bleeder screw
   (1) Temporarily tighten the bleeder screw to the caliper body.
2. Installation of cap bleeder
   (1) Install the cap bleeder to the bleeder screw.

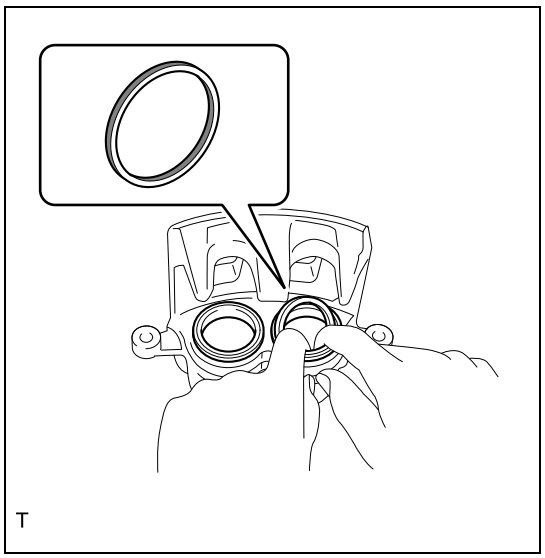

3. Installation of piston seal
   (1) Apply rubber grease all around 2 new piston seals.

Captions in illustration

	Rubber grease (RENOLIT rubber grease JP) or equivalent

(2) Securely install 2 piston seals to the disc brake cylinder grooves.

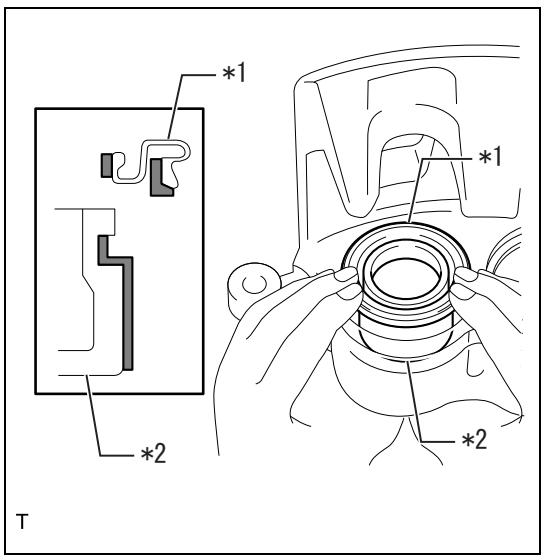

4. Installation of front disc brake piston
   (1) Apply rubber grease to a new cylinder boot.

Captions in illustration

*1	Cylinder boot
*2	Front disc brake piston
	Rubber grease (RENOLIT rubber grease JP) or equivalent

(2) Securely install the cylinder boot to the front disc brake piston groove.
(3) Apply a thin coat of rubber grease to the outer peripheries of 2 front disc brake pistons, and install them to the front disc brake cylinder ASSY LH.
CAUTION:
Do not push the front disc brake piston in with excessive force.

5. Installation of cylinder boot
   (1) Securely install the cylinder boot to the front disc brake cylinder ASSY LH groove.

FB

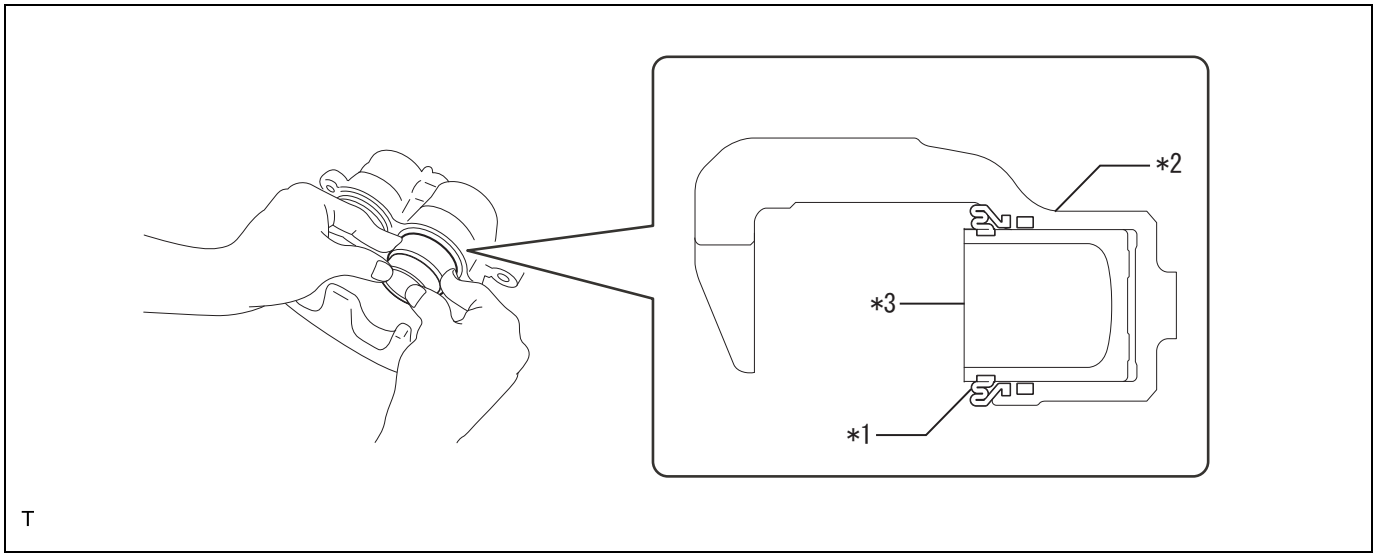

Captions in illustration

*1	Cylinder boot	*2	Front disc brake cylinder ASSY LH
*3	Front disc brake piston	-	-

Assembly (brembo type)

1. Temporary tightening of bleeder screw
   (1) Temporarily tighten the bleeder screw to the caliper body.
2. Installation of cap bleeder
   (1) Install the cap bleeder to the bleeder screw.

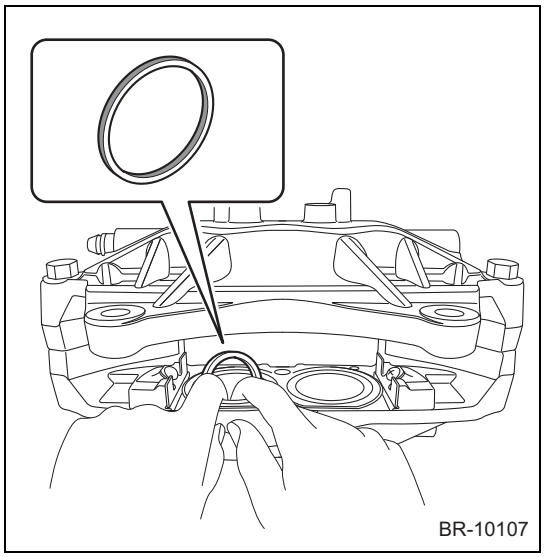

3. Installation of piston seal
   (1) Apply rubber grease all around 2 new piston seals.

Captions in illustration

	Rubber grease (RENOLIT rubber grease JP) or equivalent

   (2) Securely install 4 piston seals to the caliper body grooves.
4. Installation of piston-disc brake
   (1) Apply rubber grease to a new piston boot.
   (2) Securely install the piston boot to the piston disc brake grooves.
   (3) Apply a thin coat of rubber grease to the outer periphery of the 4 piston disc brake, and install to the caliper body.
   CAUTION:
   Do not push the piston-disc brake in with excessive force.
   (4) Securely install the piston boot to the caliper body grooves.

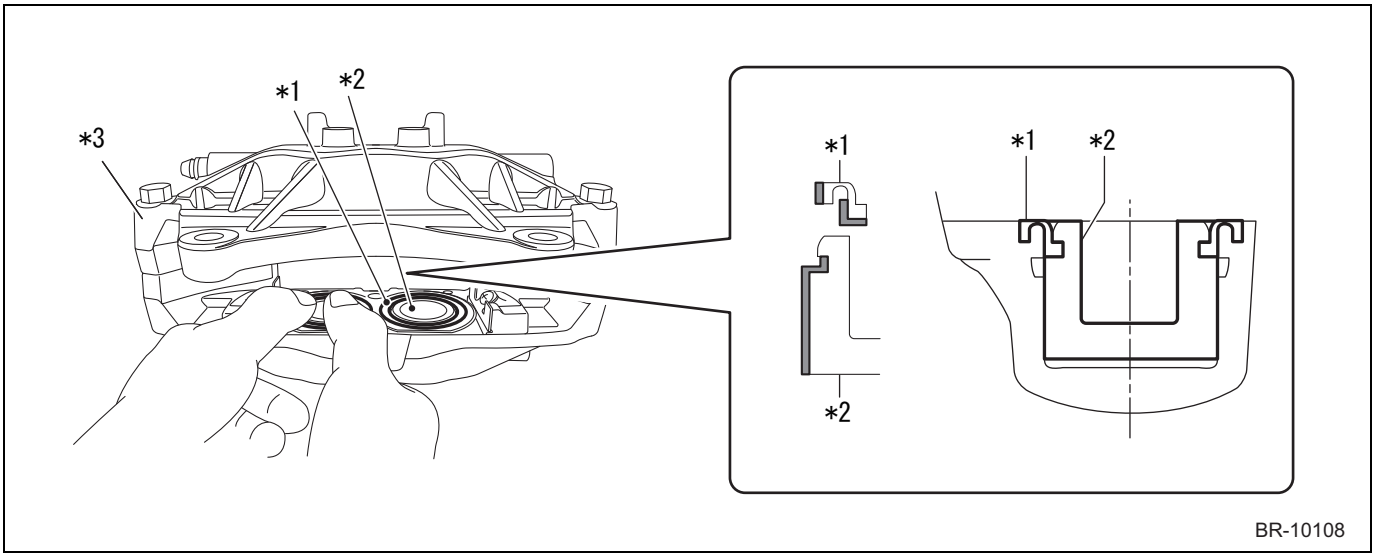

Captions in illustration

*1	Piston boot	*2	Piston disc brake
*3	Caliper body		Rubber grease (RENOLIT rubber grease JP) or equivalent

Installation (normal type)

NOTE:

- The following procedure is for LH side.
- Service the LH side and the RH side using the same procedure.

1. Installation of front disc
   (1) When removing/installing the front disc
   (a)Aligning the mark which you put at the time of removal, install the front disc to the axle hub.
   (2) When replacing the front disc
   (a)Check the disc runout (Refer to FB - 11) and install the front disc to the axle hub.
   (3) Temporarily tighten the hub nut to secure the front disc to the axle hub.

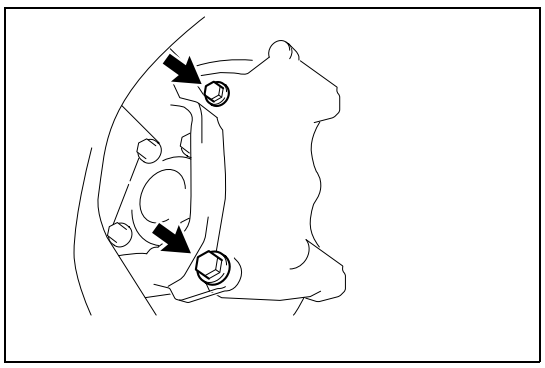

2. Installation of front disc brake cylinder mounting LH
   (1) Install the front disc brake cylinder mounting LH with 2 new bolts.
   Standard value:Width across flat 17 mm {0.6693 in}
   T=80N·m {816kgf·cm} {59.0ft·lbf}
   Width across flat 19 mm {0.748 in}
   T=135N·m {1377kgf·cm} {100.0 ft·lbf}

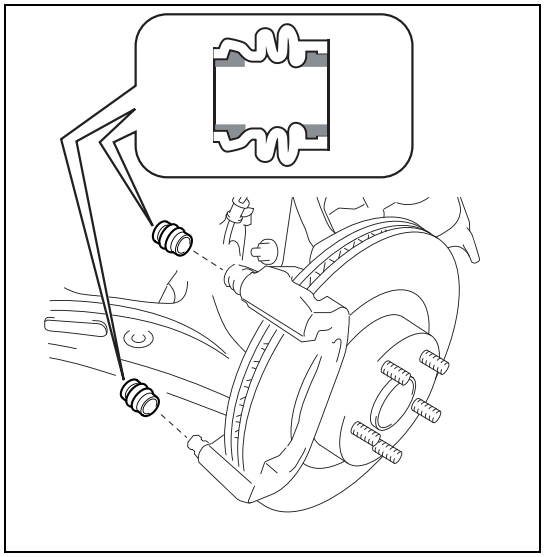

3. Installation of boots (pins)
   (1) Apply rubber grease all around the engaging parts of new 2 boots (pins).

Captions in illustration

	Rubber grease (NIGLUBE RX-2) or equivalent

NOTE:
Apply 1.5±2.0g of rubber grease (NIGLUBE RX-2) per 1 front disc brake bushing dust boot.

   (2) Install 2 front disc brake bushing dust boots to the front disc brake cylinder mounting LH.

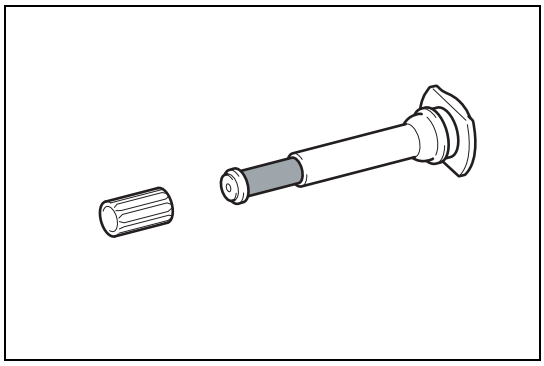

4. Installation of bushing
   (1) Apply a thin coat of rubber grease all around the contacting surface of the new bushing and the front disc brake cylinder slide pin No.2.

Captions in illustration

	Rubber grease (NIGLUBE RX-2) or equivalent

   (2) Install the bushing to the front disc brake cylinder slide pin No.2.

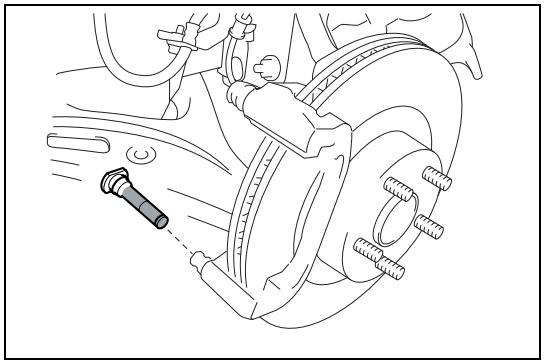

5. Installation of front disc brake cylinder slide pin No.2

Captions in illustration

	Rubber grease (NIGLUBE RX-2) or equivalent

   (1) Apply a thin coat of rubber grease all around the engaging part and the sliding part of the front disc brake cylinder slide pin No.2.
   (2) Install the front disc brake cylinder slide pin No.2 to the carrier.

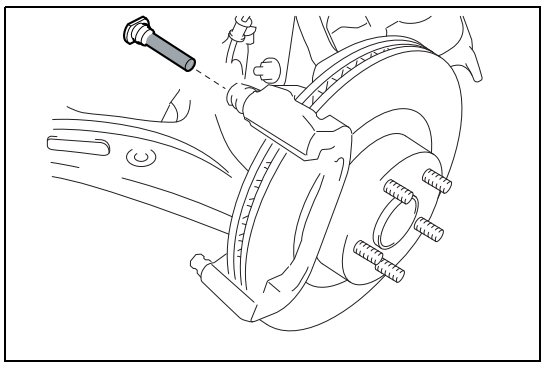

6. Installation of front disc brake cylinder slide pin

Captions in illustration

	Rubber grease (NIGLUBE RX-2) or equivalent

   (1) Apply a thin coat of rubber grease all around the engaging part and the sliding part of the front disc brake cylinder slide pin.
   (2) Install the front disc brake cylinder slide pin to the carrier.

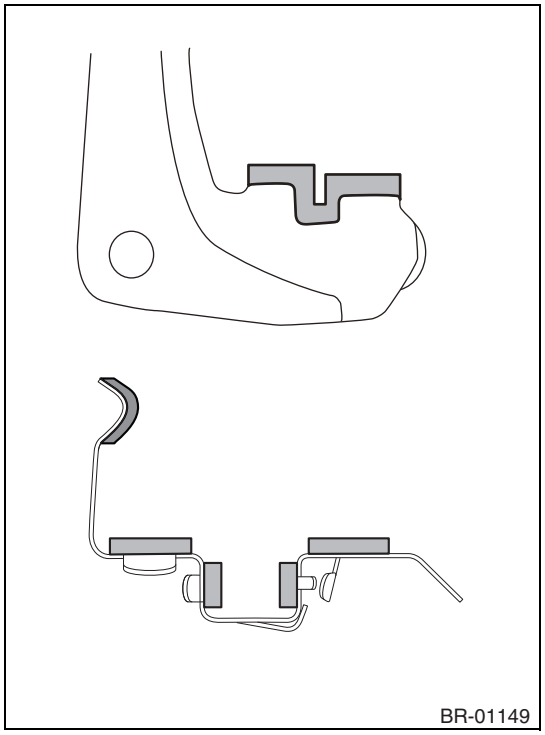

7. Installation of spring (L)
   (1) Apply a thin coat of MP grease No.2 or equivalent to the part where the disc brake pad kit FR for the spring (L) contacts.
   (2) Install the spring (L) to the front disc brake cylinder mounting LH.

Captions in illustration

	MP grease No.2 or equivalent

8. Installation of spring (pad)
   NOTE:
   Service the spring (pad) in the same procedures for the spring (L).
9. Installation of front disc brake pad
   (1) Install the front disc brake pad to the shim.
   (2) Install the disc brake pad to the carrier.

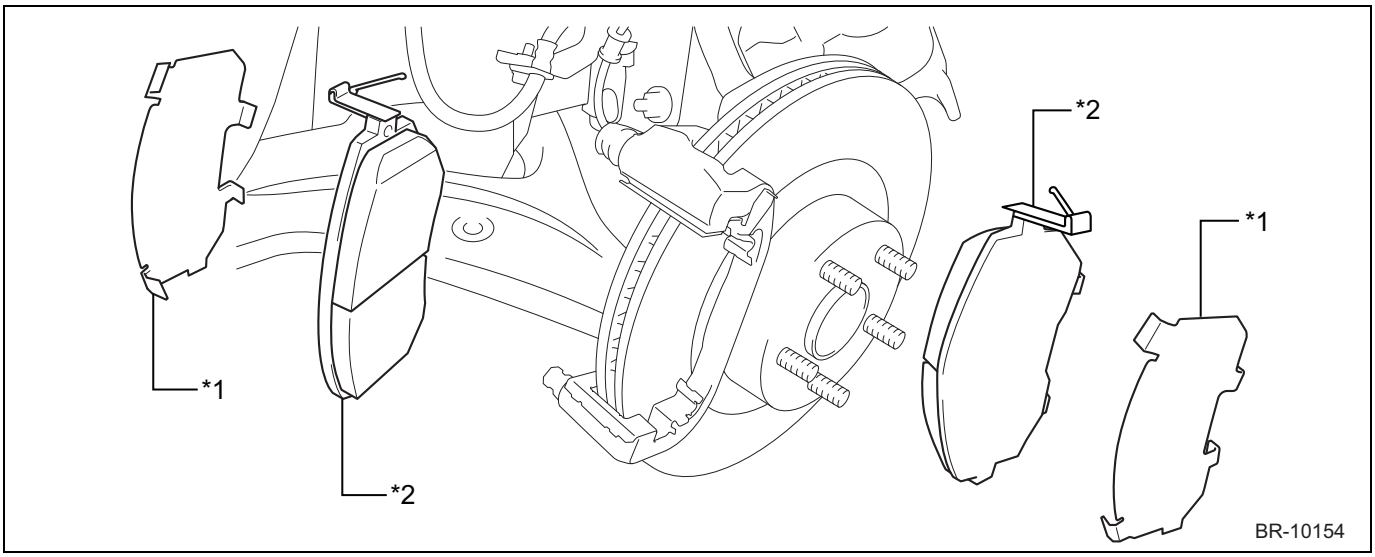

Captions in illustration

*1	Shim	*2	Disc brake pad

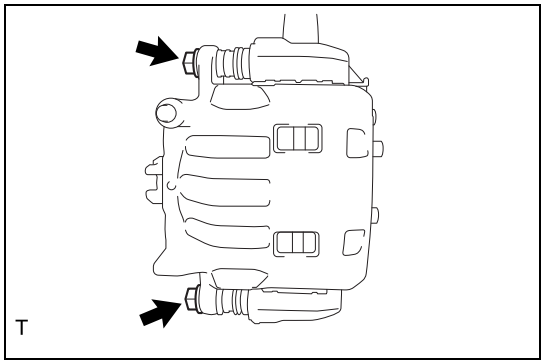

10. Installation of front disc brake cylinder ASSY LH
    (1) Install the front disc brake cylinder ASSY LH to the carrier with 2 bolts.
    Standard value:T=26N·m {265kgf·cm} {19.2ft·lbf}

11. Connection of front flexible hose No.1
    (1) Using a new union bolt, connect the front flexible hose No.1 to the disc brake cylinder ASSY via 2 new gaskets.
    Standard value:T=26N·m {265kgf·cm} {19.2ft·lbf}
12. Brake fluid refill (Refer to BR - 8)
13. Air bleeding of brake system (Refer to BR - 8)
14. Brake fluid leak check
15. Brake fluid level check (Refer to BR - 12)
16. Installation of front tire
    Standard value:T=120N·m {1224kgf·cm} {88.5ft·lbf}

Installation (brembo type)

NOTE:

- The following procedure is for LH side.
- Service the LH side and the RH side using the same procedure.

1. Installation of disc rotor
    (1) When removing/installing disc rotor
    (a)Aligning the mark which you put at the time of removal, install the disc rotor to the axle hub.
    (2) When replacing the front disc
    (a)Check the disc runout (Refer to FB - 11) and install the disc rotor to the axle hub.
    (3) Temporarily tighten the hub nut to secure the disc rotor to the axle hub.

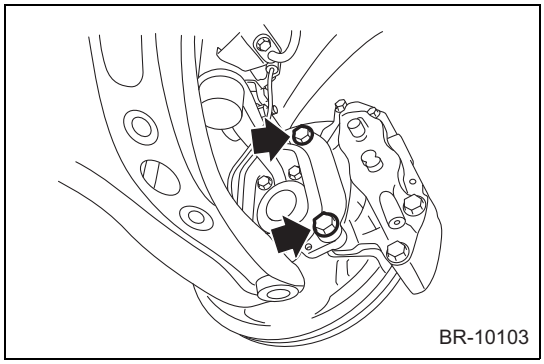

2. Installation of caliper body ASSY
    (1) Install the caliper body ASSY and tie bar with 2 bolts.
    CAUTION:
    When installing the caliper body ASSY and tie bar, temporarily tighten with 2 bolts as far as it can be turned by hand, and then tighten to the specified torque.
    NOTE:
    If it is hard to tighten, use the SST.
    SST 09661-01270
    Standard value:T=120N·m {1224kgf·cm} {88.5ft·lbf}

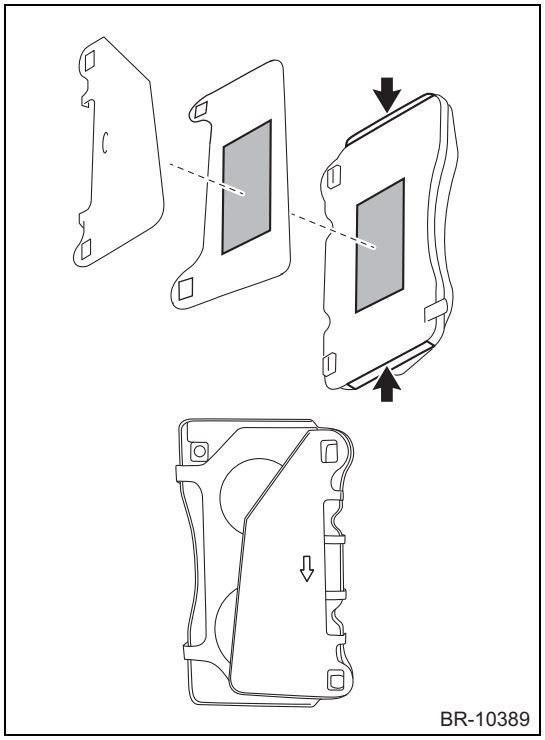

3. Installation of pad disc brake front
   (1) Apply a thin coat of grease to the side surface of pad disc brake front, both surfaces of shim disc brake front inner and shim installation surface of pad disc brake front.

Captions in illustration

▭	Disc brake grease II or equivalent
➡	MP grease No.2 or equivalent

   (2) Install the pad disc brake front.
   NOTE:
   Install so that the arrow faces downward.
   (3) Install the cross spring, pin disc brake and clip slide pin.

4. Connection of front flexible hose No.1
   (1) Using a new union bolt, connect the front flexible hose No. 1 to the caliper body ASSY via 2 new gaskets.
   Standard value:T=26N·m {265kgf·cm} {19.2ft·lbf}
5. Brake fluid refill (Refer to BR - 8)
6. Air bleeding of brake system (Refer to BR - 8)
7. Brake fluid leak check
8. Brake fluid level check (Refer to BR - 12)
9. Installation of front tire
   Standard value:T=120N·m {1224kgf·cm} {88.5ft·lbf}

Front brake flexible hose

Exploded view

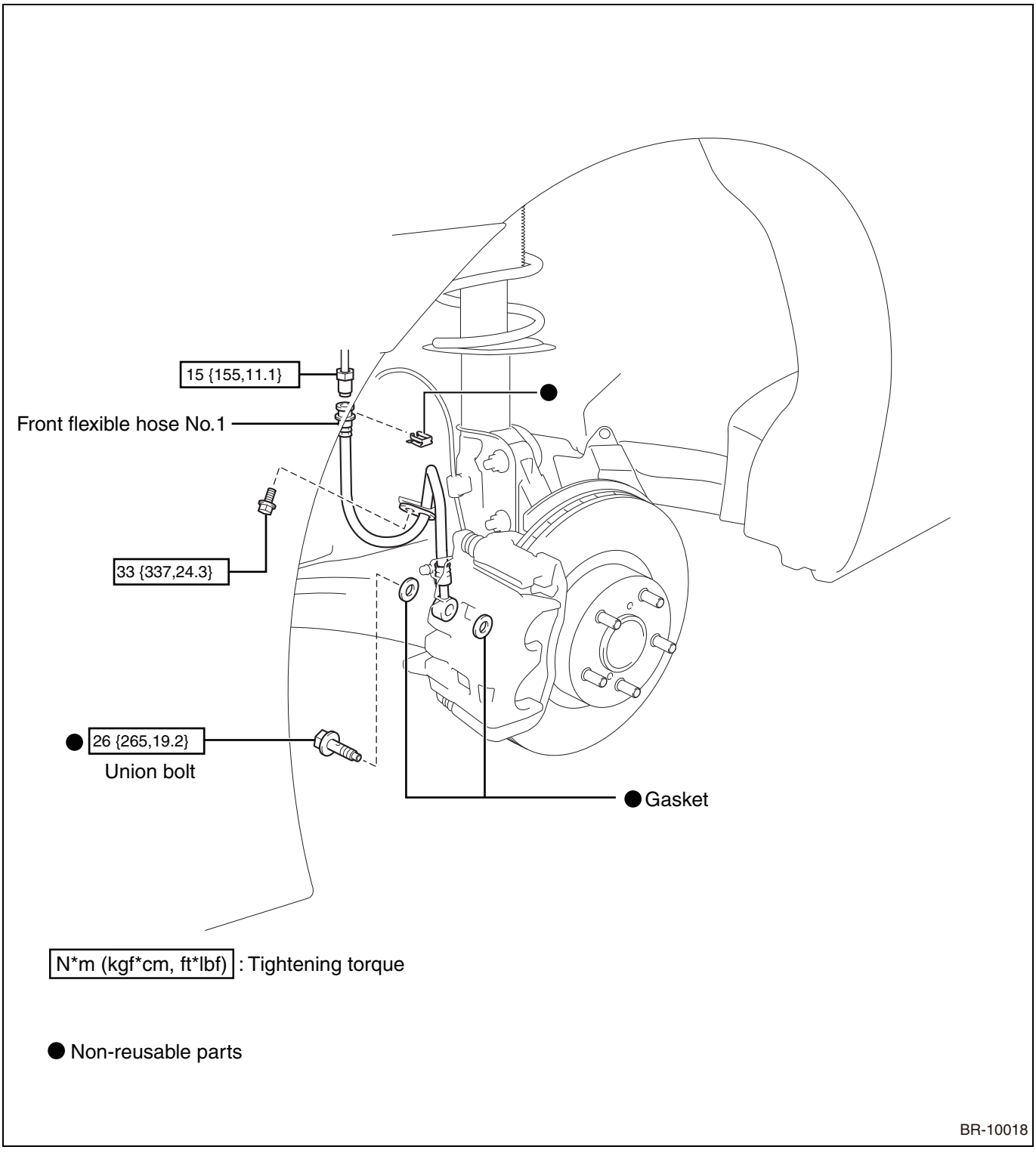

Removal

NOTE:

- The following procedure is for LH side.
- Service the LH side and the RH side using the same procedure.
- The procedures described below are for the normal type. For the brembo type, perform the same procedures as the normal type.

1. Removal of front tire

2. Draining of brake fluid
   CAUTION:
   Do not let brake fluid come into contact with the painted surface. If it happens, wash it out immediately.

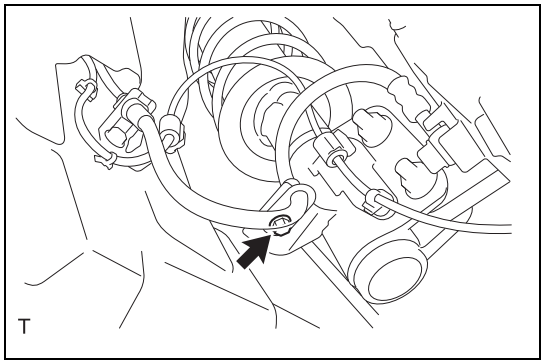

3. Removal of front flexible hose No.1
   (1) Remove the bolt and disconnect the front flexible hose No.1 from the front shock absorber ASSY.

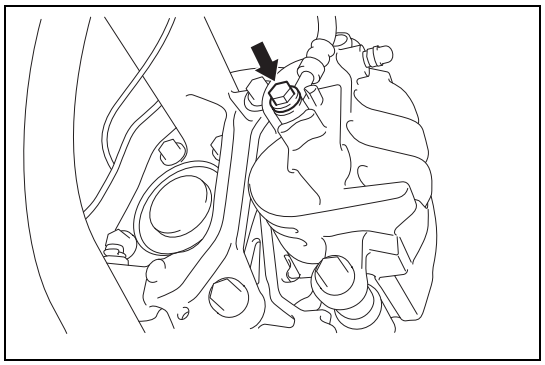

   (2) Remove the union bolt and 2 gaskets, and then remove the front flexible hose No.1.

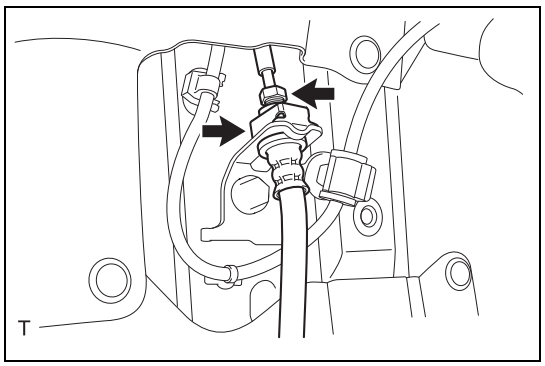

   (3) Secure the flexible hose No.1 with a spanner, and disconnect the brake tube using a flare-nut wrench.
   CAUTION:
   - Do not bend or damage the brake tubes.
   - Do not let foreign matter including dirt and dust enter the connection part of the brake tube.

   (4) Remove the clip.
   (5) Remove the front flexible hose No.1.

Installation

NOTE:
- The following procedure is for LH side.
- Service the LH side and the RH side using the same procedure.
- The procedures described below are for the normal type. For the brembo type, perform the same procedures as the normal type.

1. Installation of front flexible hose No.1
   (1) With a new clip, install the front flexible hose No.1.
   CAUTION:
   Securely attach the clip as far as it will go.
   (2) Secure the flexible hose No.1 with a spanner, and connect the brake tube to the front flexible hose No.1 using a flare-nut wrench.
   Standard value:T=15N·m {155kgf·cm} {11.1ft·lbf}
   CAUTION:
   - Do not bend or damage the brake tubes.
   - Do not let foreign matter including dirt and dust enter the connection part of the brake tube.
   (3) With a bolt, install the front flexible hose No.1 to the front shock absorber ASSY.

Standard value:T=33N·m {337kgf·cm} {24.3ft·lbf}

(4) Using a new union bolt, install the front flexible hose No.1 to the disc brake cylinder ASSY via 2 new gaskets.
Standard value:T=26N·m {265kgf·cm} {19.2ft·lbf}

2. Brake fluid refill (Refer to BR - 8)
3. Air bleeding of brake system (Refer to BR - 8)
4. Brake fluid leak check
5. Brake fluid level check (Refer to BR - 12)
6. Installation of front tire
Standard value:T=120N·m {1224kgf·cm} {88.5ft·lbf}

Rear brake

Rear brake

Exploded view RB-2
Removal (normal type). RB-5
Removal (brembo type) RB-8
Disassembly (normal type) RB-10
Disassembly (brembo type) RB-11
Inspection. RB-12
Assembly (normal type) RB-13
Assembly (brembo type) RB-14
Installation (normal type) RB-15
Installation (brembo type) RB-17

Rear brake flexible hose

Exploded view RB-19
Removal. RB-19
Installation RB-20

Rear brake

Exploded view

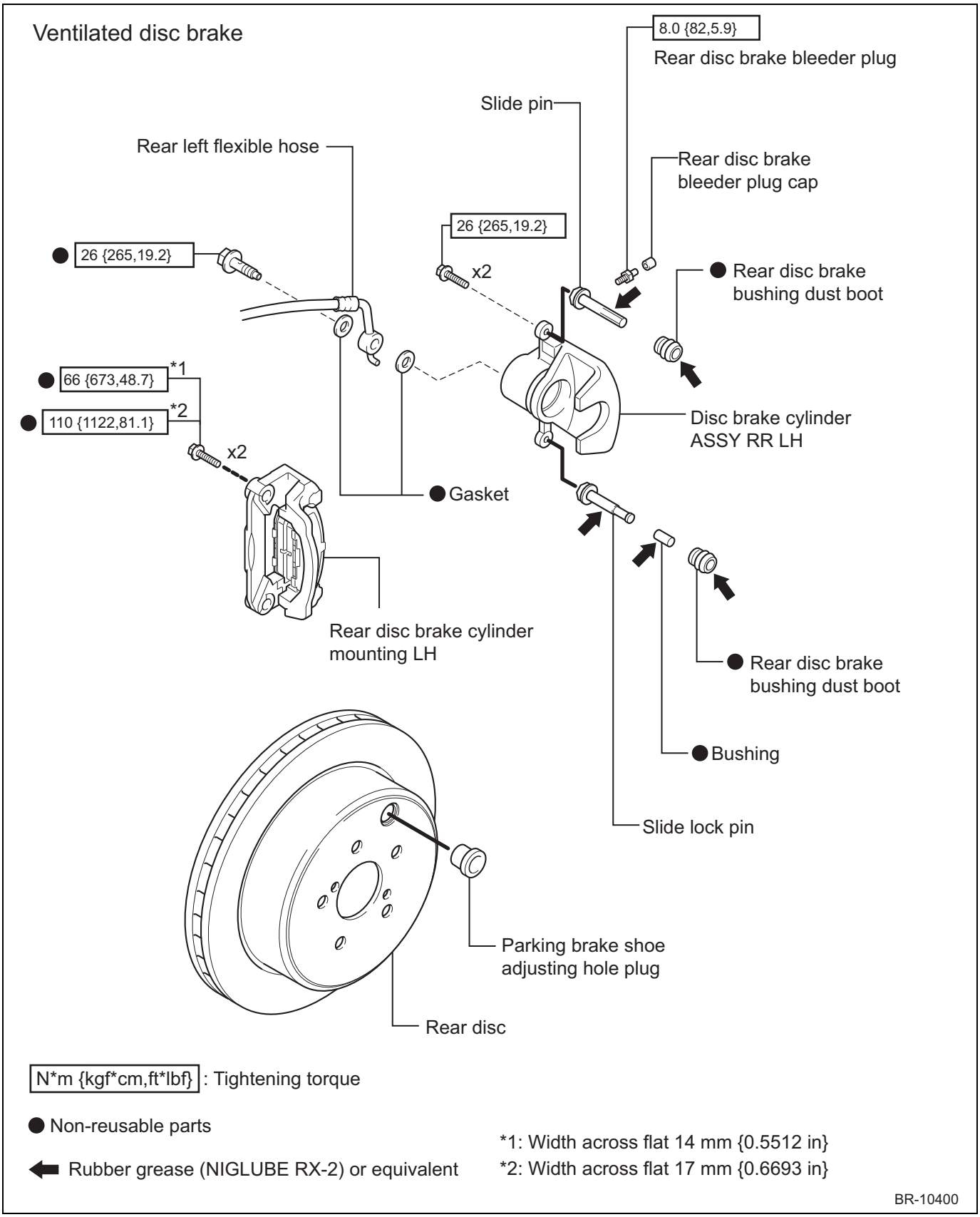

RB

Brembo type

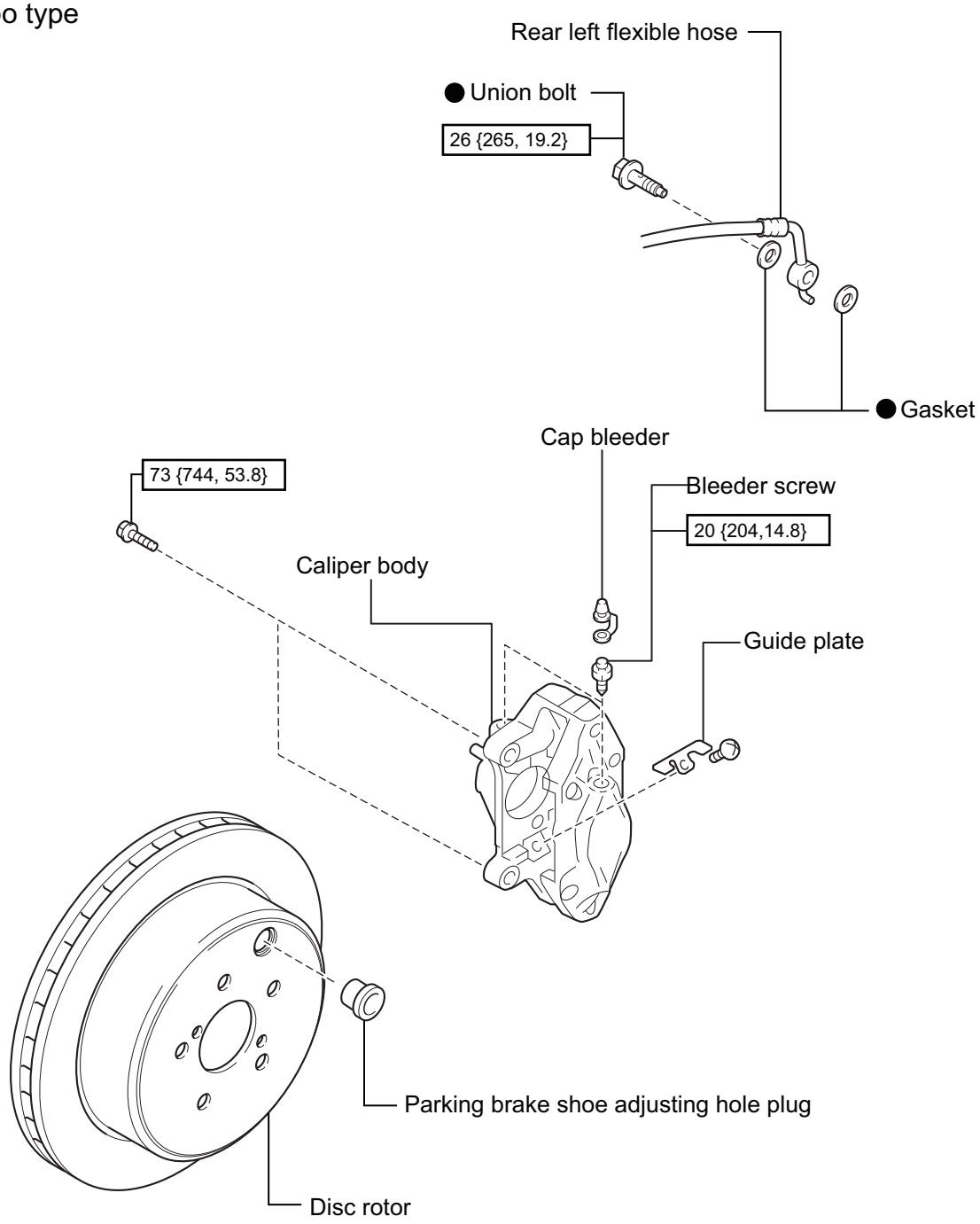

N*m {kgf*cm, ft*lbf}: Tightening torque

● Non-reusable part

BR-10156

RB

Normal type

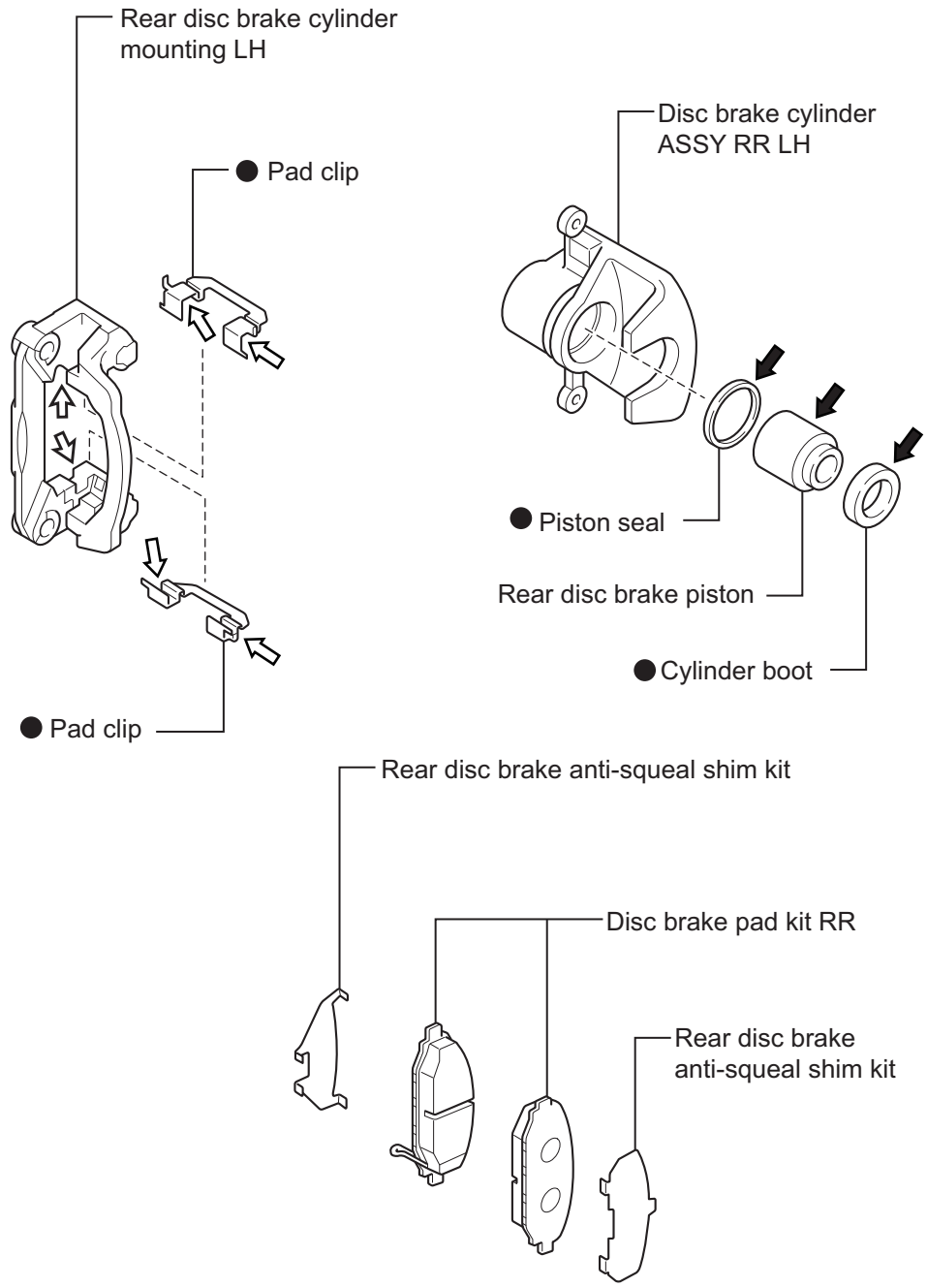

● Non-reusable parts

⬅ Rubber grease (RENOLIT rubber grease JP) or equivalent

⇦ MP grease No.2 or equivalent

RB

BR-10641

Brembo type

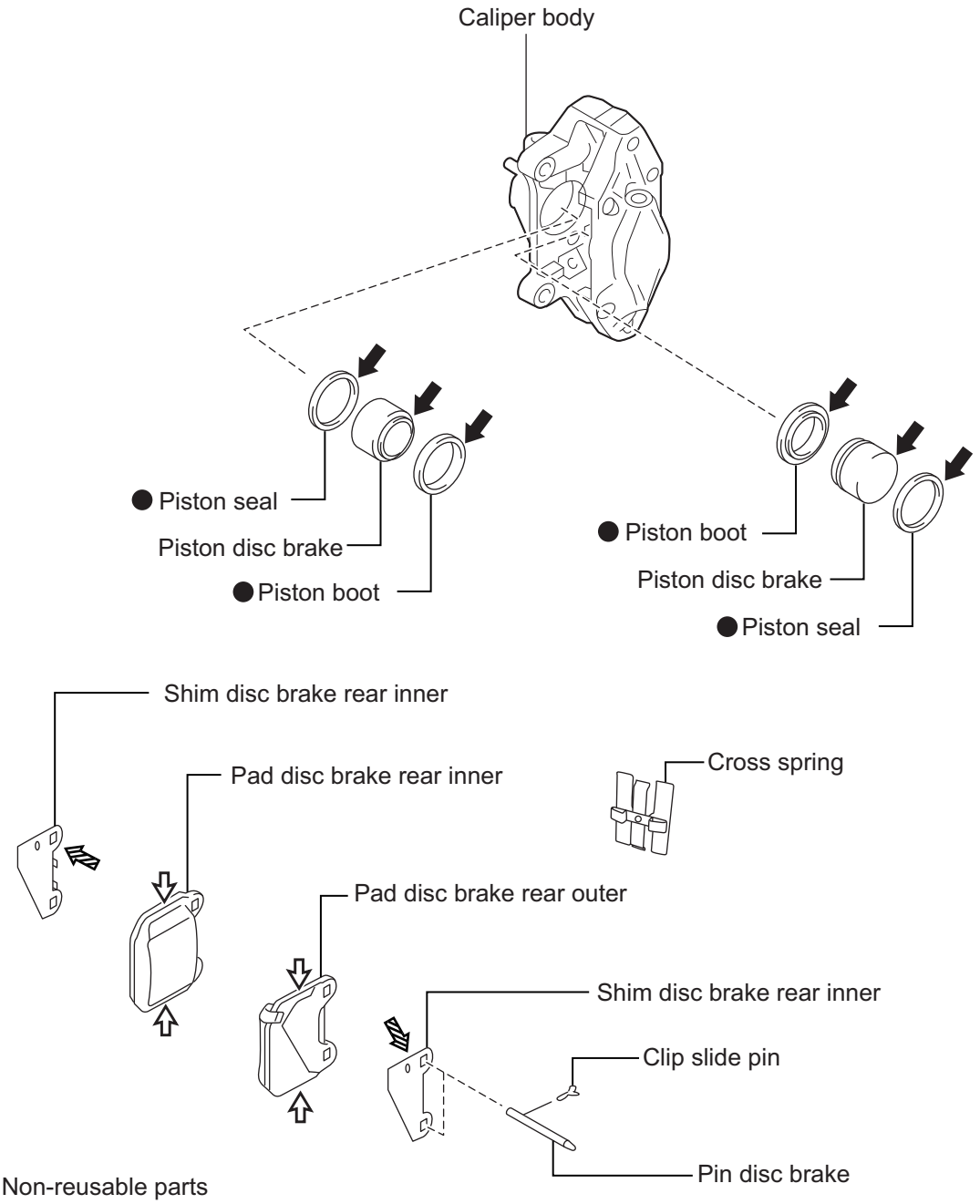

BR-10402

RB

Removal (normal type)

NOTE:

- The following procedure is for LH side.
- Perform the same procedures for the RH and LH side.

1. Removal of rear tire
2. Draining of brake fluid
   CAUTION:
   Do not let brake fluid come into contact with the painted surface. If it happens, wash it out immediately.

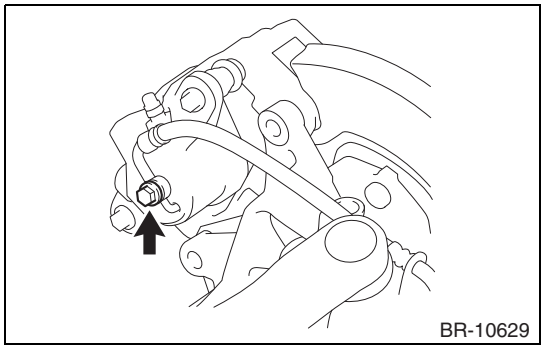

3. Disconnection of rear left flexible hose
   (1) Remove the union bolt and 2 gaskets to disconnect the rear left flexible hose from the disk brake cylinder ASSY RR LH.

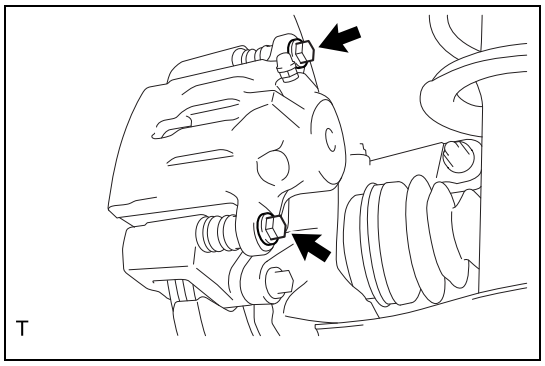

4. Removal of disc brake cylinder ASSY RR LH
   (1) Remove 2 bolts and then the disc brake cylinder ASSY RR LH.

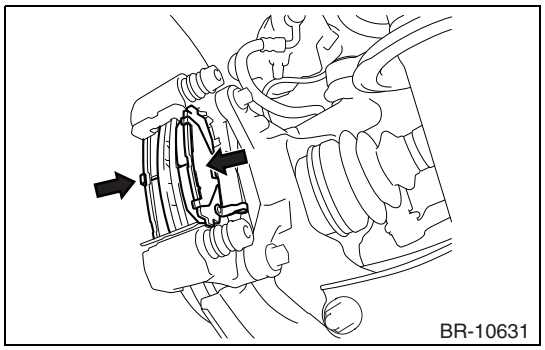

5. Removal of disc brake pad kit RR
   (1) Remove the disc brake pad kit RR from the rear disc brake cylinder mounting LH.

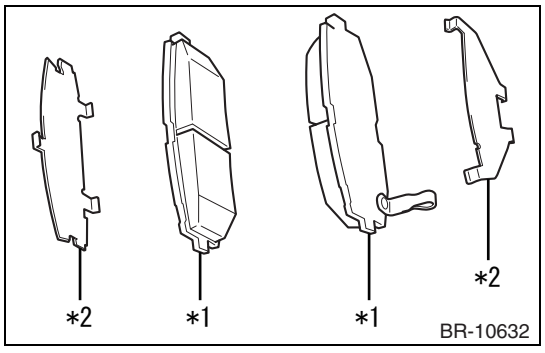

6. Removal of rear disc brake anti squeal shim kit
   (1) Remove the rear disc brake anti-squeal shim kit from the disc brake pad kit RR.

Captions in illustration

*1	Disc brake pad kit RR
*2	Rear disc brake anti squeal shim kit

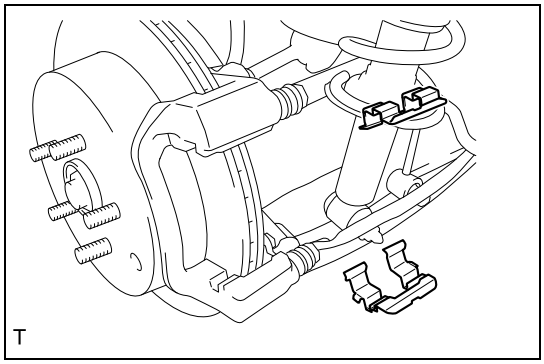

7. Removal of pad clip
   (1) Remove the pad clip.

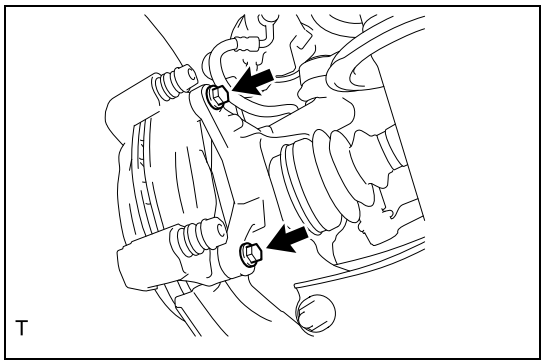

8. Removal of rear disc brake cylinder mounting LH
   (1) Remove 2 bolts and then the rear disc brake cylinder mounting LH.

9. Removal of parking brake shoe adjusting hole plug
   Remove the parking brake shoe adjusting hole plug from the rear disc.

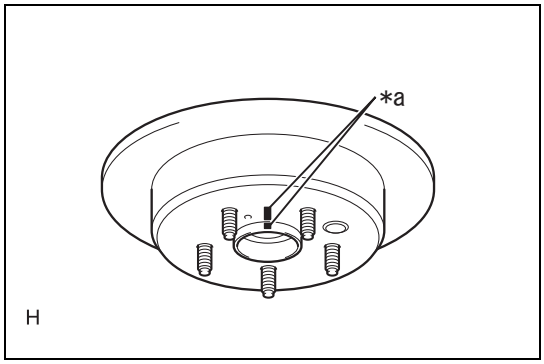

10. Removal of rear disc
    (1) Put alignment marks on the rear disc and rear axle hub. (This is not required when replacing the rear disc.)

Captions in illustration

*a	Alignment marks

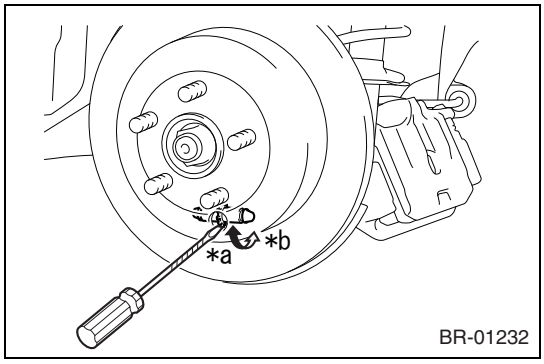

(2) Release the parking brake and remove the rear disc.
NOTE:
If it is difficult to remove the rear disc, insert a flat head screwdriver from the rear disc service hole and rotate the adjusting screw to contract the parking brake shoe.

Captions in illustration

*a	Extend
*b	Contract

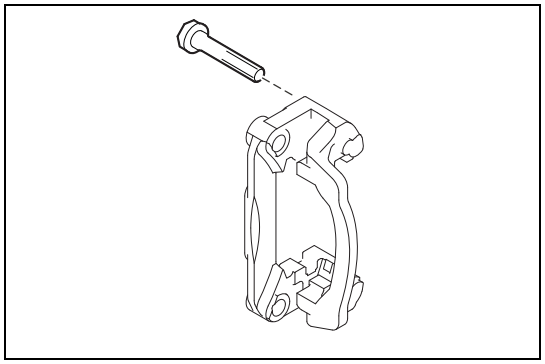

11. Removal of slide pin
    (1) Remove the slide pin from the rear disc brake cylinder mounting LH.

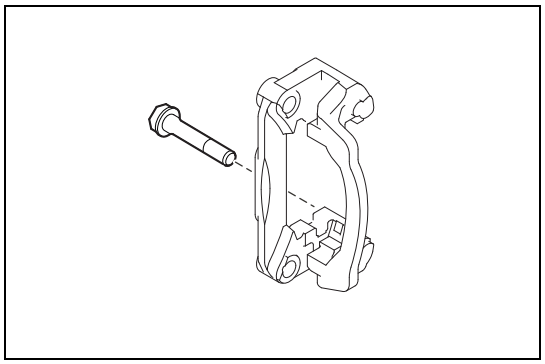

12. Removal of slide lock pin
    (1) Remove the slide lock pin from the rear disc brake cylinder mounting LH.

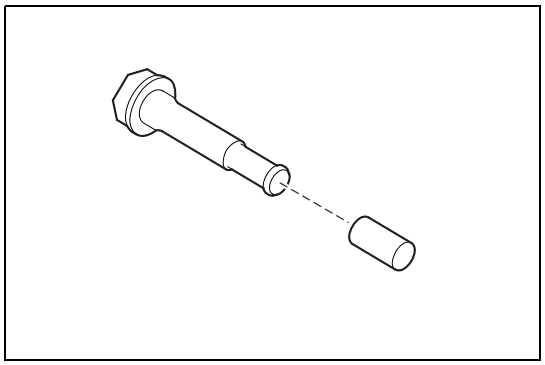

    (2) Remove the bushing from the slide lock pin.

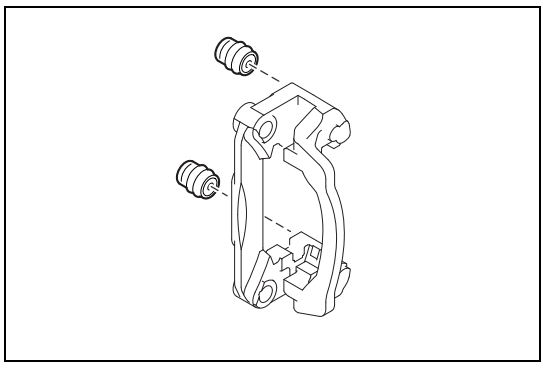

13. Removal of rear disc brake bushing dust boot
    (1) Remove 2 rear disc brake bushing dust boots from the rear disc brake cylinder mounting LH.

Removal (brembo type)

NOTE:

- The following procedure is for LH side.
- Perform the same procedures for the RH and LH side.

1. Removal of rear tire
2. Draining of brake fluid
   CAUTION:
   Do not let brake fluid come into contact with the painted surface. If it happens, wash it out immediately.

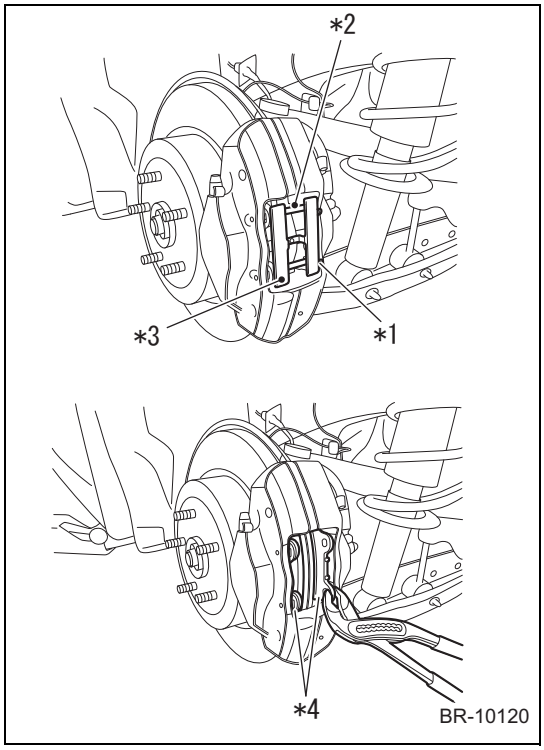

3. Removal of pad disc brake rear
   (1) Remove the clip slide pin, and remove the pin disc brake and cross spring.
   (2) While pushing back the piston using a wrench, remove the pad disc brake rear.

Captions in illustration

*1	Clip slide pin
*2	Pin disc brake
*3	Cross spring
*4	Pad disc brake

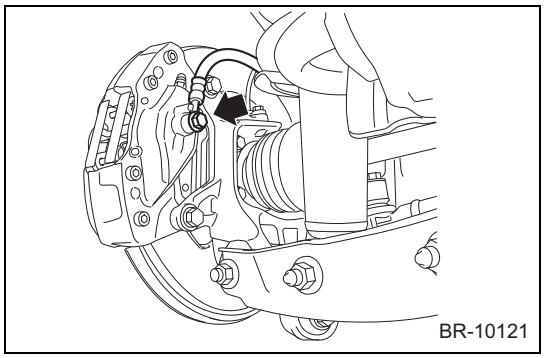

4. Disconnection of rear left flexible hose
   (1) Remove the union bolt and 2 gaskets, and then remove the rear left flexible hose from the caliper body ASSY.

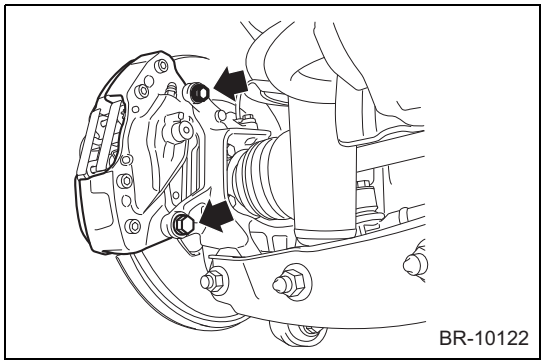

5. Removal of disc brake ASSY
   (1) Remove the 2 bolts, and remove the caliper body ASSY.

6. Removal of parking brake shoe adjusting hole plug
   Remove the parking brake shoe adjusting hole plug from the disc rotor.

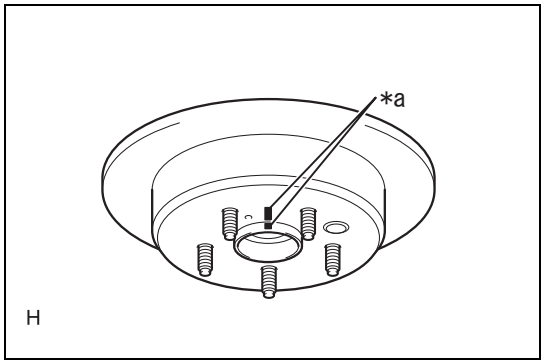

7. Removal of disc rotor
   (1) Put alignment marks on the disc rotor and rear axle hub. (It is not necessary when replacing the disc rotor).

Captions in illustration

*a	Alignment marks

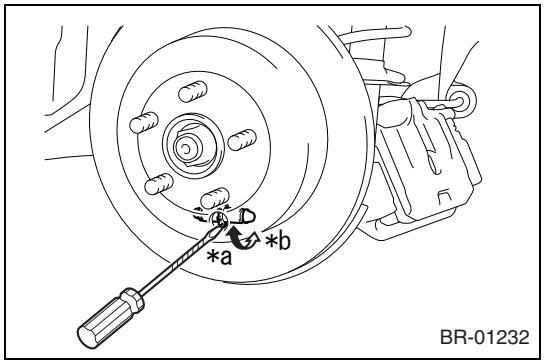

   (2) Release the parking brake and remove the disc rotor.
   NOTE:
   If it is difficult to remove the disc rotor, insert a flat head screwdriver from the disc rotor service hole and rotate the adjusting screw to contract the parking brake shoe.

Captions in illustration

*a	Extend
*b	Contract

Disassembly (normal type)

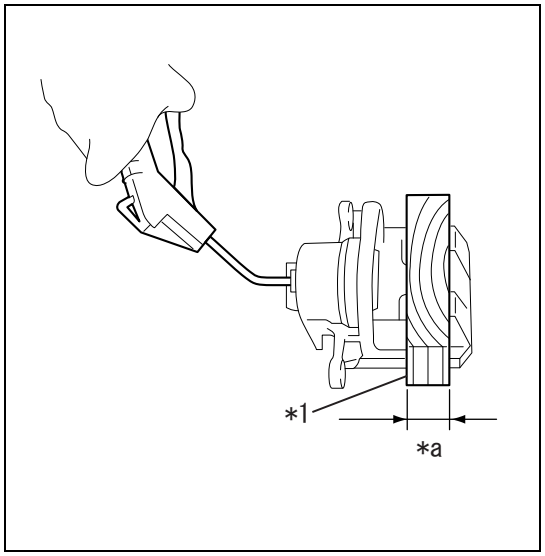

1. Removal of rear disc brake piston
   (1) Put a wooden block between the rear disc brake piston and the disc brake cylinder to prevent the rear disc brake piston from being damaged.

Captions in illustration

*1	Wooden block
*a	30mm {1.181in}

   (2) Using an air gun, gradually blow air into the applicable part to remove the rear disc brake piston.
   WARNING:
   Be careful not to pinch your fingers.
   CAUTION:
   Be careful not to spill brake fluid.

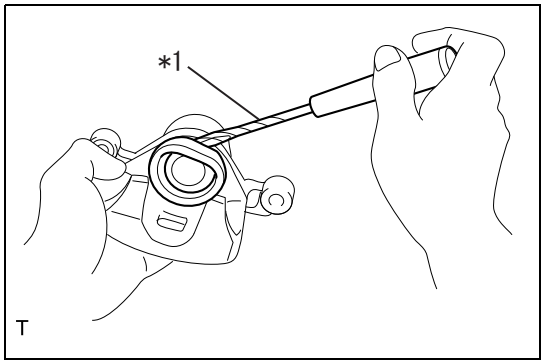

2. Removal of cylinder boot
   (1) Using a thin flat tip screwdriver, remove the cylinder boot from the disc brake cylinder.
   NOTE:
   Wrap the tip of the screwdriver with a protective tape.
   CAUTION:
   Do not damage the cylinder wall and the piston seal groove.

Captions in illustration

*1	Protective tape

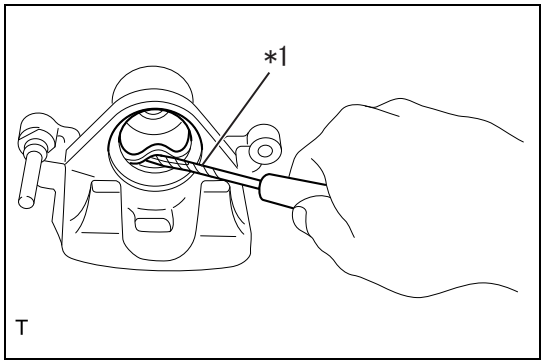

3. Removal of piston seal
   (1) Using a thin flat tip screwdriver, remove the piston seal.
   NOTE:
   Wrap the tip of the screwdriver with a protective tape.
   CAUTION:
   Do not damage the cylinder wall and the piston seal groove.

Captions in illustration

*1	Protective tape

4. Removal of cap bleeder
   (1) Remove the cap bleeder from the bleeder screw.
5. Removal of bleeder screw
   (1) Remove the bleeder screw.

Disassembly (brembo type)

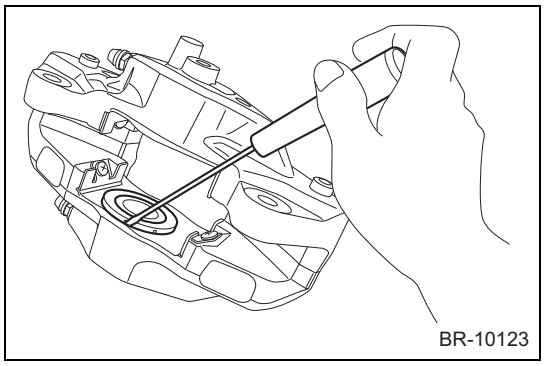

1. Removal of piston boot
   (1) Remove the 2 piston boots.

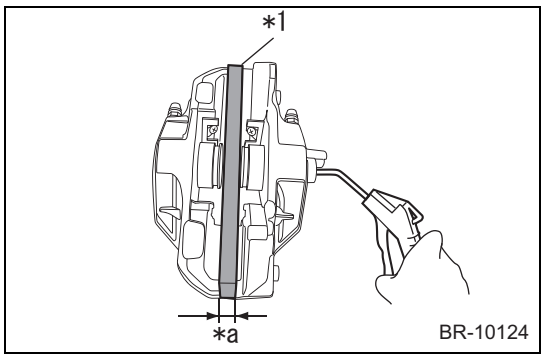

2. Removal of piston disc brake
   (1) Put a wooden block between the piston disc brake and the caliper body to prevent the piston disc brake from being damaged.

Captions in illustration

*1	Wooden block
*a	20mm{0.79in}

   (2) Using an air gun, gradually blow air into the applicable part to remove the piston disc brake.
   WARNING:
   Be careful not to pinch your fingers.
   CAUTION:
   Be careful not to spill brake fluid.

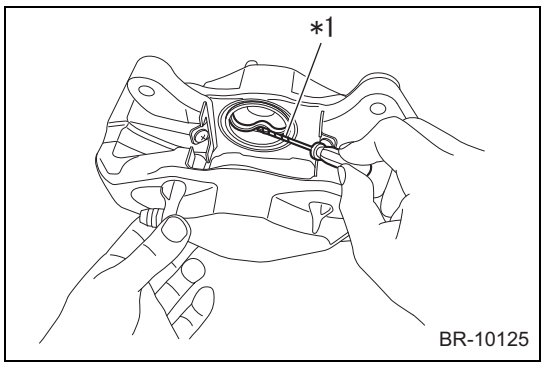

3. Removal of piston seal
   (1) Using a thin flat tip screwdriver, remove the piston seal.
   NOTE:
   Wrap the tip of the screwdriver with a protective tape.
   CAUTION:
   Do not damage the cylinder wall and the piston seal groove.

Captions in illustration

*1	Protective tape

4. Removal of cap bleeder
   (1) Remove the cap bleeder from the bleeder screw.

5. Removal of bleeder screw
   (1) Remove the bleeder screw.

Inspection

1. Disc brake piston and cylinder check
   (1) Check that there is no damage on the side of the disc brake piston and on the disc brake cylinder wall.

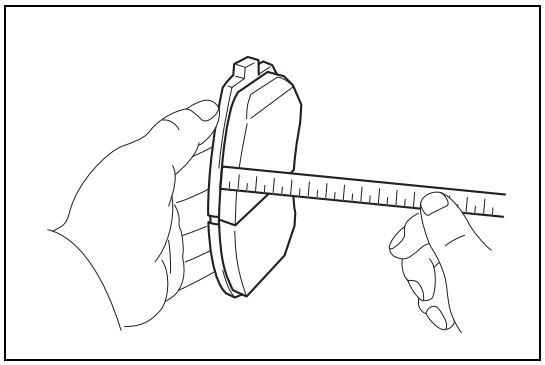

2. Disc brake pad thickness check
   - Normal type
     Limit: 1.5mm{0.059in}
     Reference value: 11.0 mm {0.433 in} (New)
   - Brembo type
     Limit: 1.55 mm {0.061 in}
     Reference value: 9.0mm{0.354in}

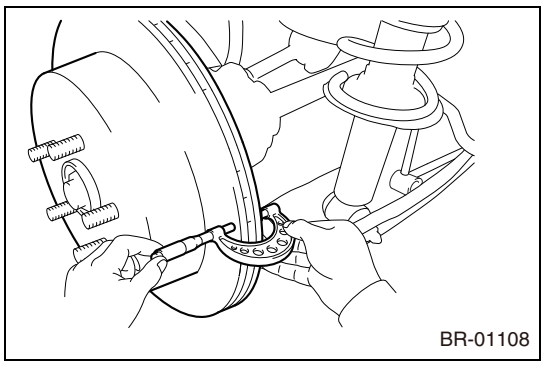

3. Disc thickness check
   - Normal type
     Limit: 16.0 mm {0.630 in}
     Reference value: 18.0mm {0.709in} (New)
   - Brembo type
     Limit: 18.0 mm {0.709 in}
     Reference value: 20.0mm {0.787in}

4. Disc runout check
   (1) Before checking the rear disc runout, check the rear axle hub bearing play (Refer to AD - 17) and runout (Refer to AD - 18).
   (2) Secure the rear disc with 5 hub nuts.
   Standard value:T=120N·m {1224kgf·cm} {88.5ft·lbf}

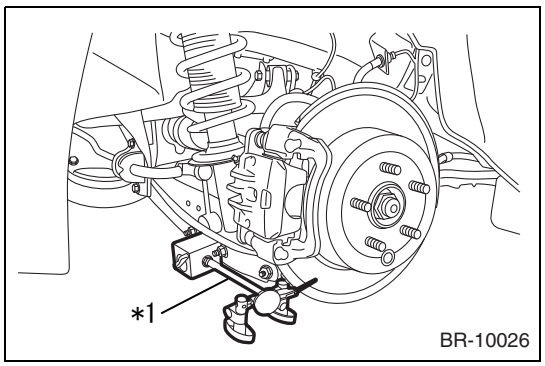

   (3) Using a dial gauge, set at 10 mm {0.394 in} inside from the rear disc outer periphery to check the front side runout.

Captions in illustration

*1	Dial gauge

   - Normal type
     Limit: 0.05mm{0.002in}
   - Brembo type
     Limit: 0.07 mm {0.003 in}

   CAUTION:
   When the runout exceeds the limit, change the positions of the rear disc and rear axle hub to minimize the runout before installation. If the runout still exceeds the limit even after changing the rear disc and the rear axle hub positions, replace the rear disc with new one.

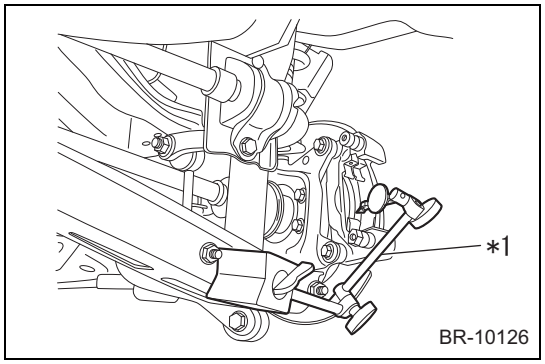

(4) Set the dial gauge at 10 mm {0.39 in} inside from the disc rotor outer periphery, and rotate the disc rotor to check the back side runout.

Captions in illustration

*1	Dial gauge

- Normal type
  Limit: 0.05mm{0.002in}
- Brembo type
  Limit: 0.07 mm {0.003 in}

NOTE:
<Example of magnet stand and dial gauge installation>

Assembly (normal type)

1. Temporary tightening of bleeder screw
   (1) Temporarily tighten the bleeder screw to the disc brake cylinder ASSY RR LH.
2. Installation of cap bleeder
   (1) Install the cap bleeder to the bleeder screw.

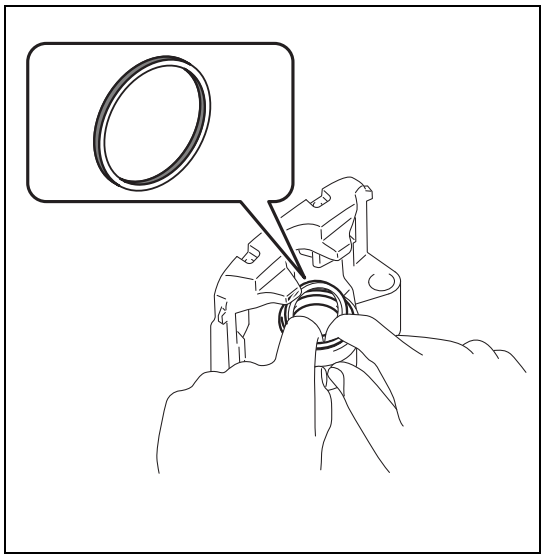

3. Installation of piston seal
   (1) Apply rubber grease to a new piston seal and install it in the disc brake cylinder groove.

Captions in illustration

	Rubber grease (RENOLIT rubber grease JP) or equivalent

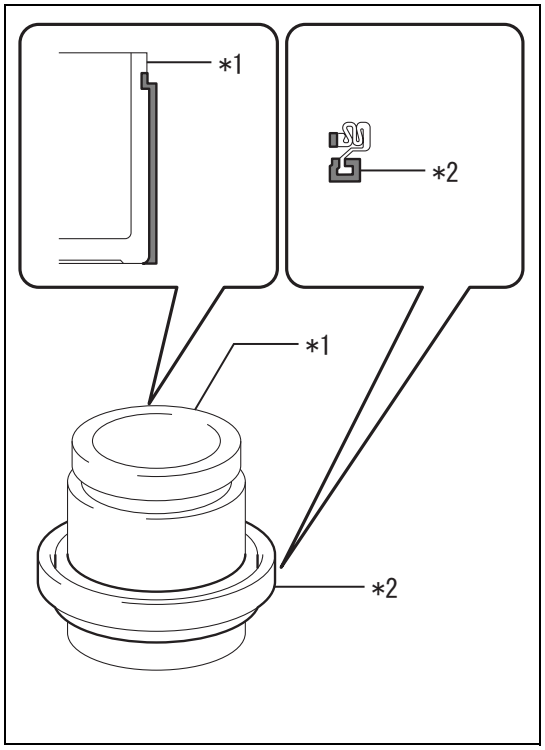

4. Installation of cylinder boot
   (1) Apply a thin coat of rubber grease to the outer periphery of the disc brake piston.

Captions in illustration

*1	Piston
*2	Cylinder boot
	Rubber grease (RENOLIT rubber grease JP) or equivalent

   (2) Apply rubber grease to a new cylinder boot and install it to the bottom of the disc brake piston as shown in the figure.

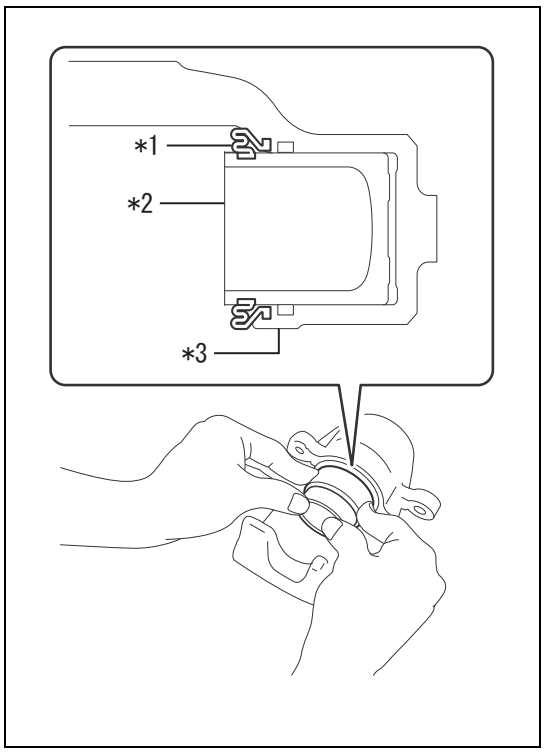

5. Installation of rear disc brake piston
   (1) Attach the seal portion of the cylinder boot to the disc brake cylinder groove.

Captions in illustration

*1	Cylinder boot
*2	Piston
*3	Cylinder

   CAUTION:
   Make sure that the seal portion of the cylinder boot is securely attached.
   (2) Push in the piston by hand, and attach the seal portion of the boot to the piston groove.
   CAUTION:
   Make sure that the seal portion of the cylinder boot is securely attached.

Assembly (brembo type)

1. Temporary tightening of bleeder screw
   (1) Temporarily tighten the bleeder screw to the caliper body.
2. Installation of cap bleeder
   (1) Install the cap bleeder to the bleeder screw.

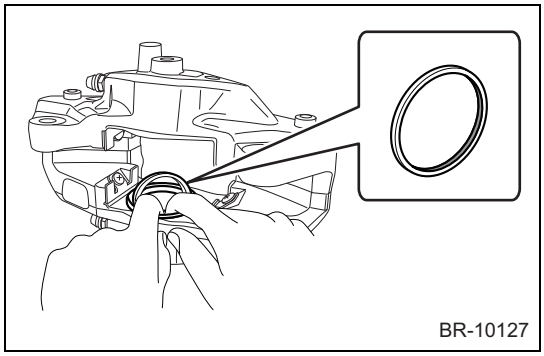

3. Installation of piston seal
   (1) Apply rubber grease to a new piston seal and install it in the caliper body groove.

Captions in illustration

	Rubber grease (RENOLIT rubber grease JP) or equivalent

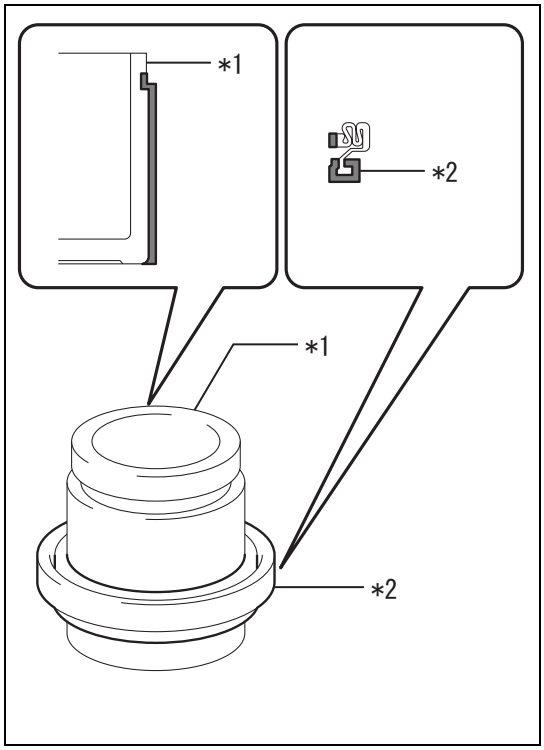

4. Installation of piston disc brake
   (1) Apply a thin coat of rubber grease to the outer periphery of the piston disc brake.

Captions in illustration

*1	Piston disc brake
*2	Piston boot
	Rubber grease (RENOLIT rubber grease JP) or equivalent

   (2) Apply rubber grease to a new piston boot and install it to the bottom of the piston disc brake as shown in the figure.
   (3) Install the seal portion of piston boot to the caliper body grooves.
   CAUTION:
   Make sure that the seal portion of the piston boot is securely attached.
   (4) Push in the piston by hand, and attach the seal portion of the boot to the piston groove.
   CAUTION:
   Make sure that the seal portion of the piston boot is securely attached.

Installation (normal type)

NOTE:

- The following procedure is for LH side.
- Service the LH side and the RH side using the same procedure.

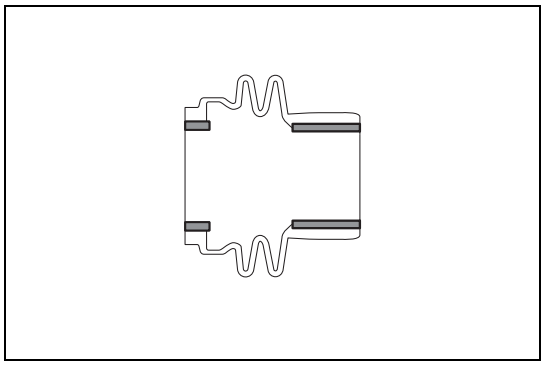

1. Installation of rear disc brake bushing duct boot
   (1) Apply rubber grease inside a new rear disc brake bushing dust boot.

Captions in illustration

	Rubber grease (NIGLUBE RX-2) or equivalent

   NOTE:
   Apply at least 1.5±0.2g {0.05±0.007} of rubber grease per 1 rear disc brake bushing dust boot.
   (2) Install 2 rear disc brake bushing dust boots to the rear disc brake cylinder mounting LH.

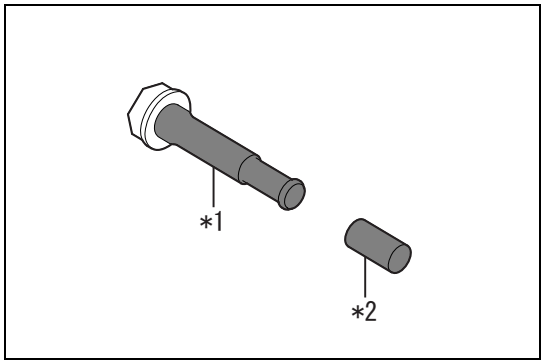

2. Installation of slide lock pin
   (1) Apply rubber grease to the contacting surface of the new bushing and the slide lock pin.

Captions in illustration

*1	Slide lock pin
*2	Bushing
	Rubber grease (NIGLUBE RX-2) or equivalent

   (2) Install the bushing to the slide lock pin.
   (3) Apply rubber grease to the sliding part and the engaging part of the slide lock pin.
   (4) Install the slide lock pin to the rear disc brake cylinder mounting LH.

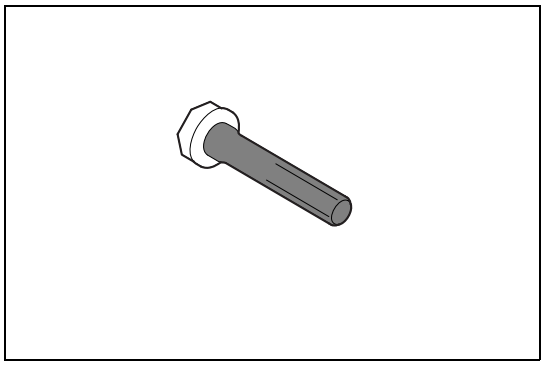

3. Installation of slide pin
   (1) Apply rubber grease to the engaging part and the sliding part of the slide pin.

Captions in illustration

	Rubber grease (NIGLUBE RX-2) or equivalent

   (2) Install the slide pin to the rear disc brake cylinder mounting LH.

4. Installation of rear disc
   (1) Aligning the mark which you put at the time of removal, install the rear disc to the axle hub.
   NOTE:
   When replacing the rear disc with new one, select the position where the rear disc runout becomes the minimum and install it.
5. Clearance adjustment of disc and lining (Refer to PB - 24)
6. Installation of parking brake shoe adjusting hole plug
   (1) Install the parking brake shoe adjusting hole plug to the rear disc.
7. Installation of rear disc brake cylinder mounting LH
   (1) Install the rear disc brake cylinder mounting LH with 2 new bolts.
   Standard value:Width across flat 14 mm {0.5512 in}
   T=66N·m {673kgf·cm} {48.7ft·lbf}
   Width across flat 17 mm {0.6693 in}
   T=110N·m {1122kgf·cm} {81.1 ft·lbf}

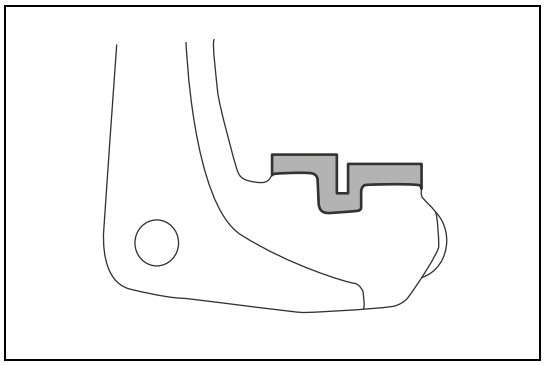

   (2) Apply a thin coat of MP grease No.2 or equivalent to the contacting part of the rear disc brake cylinder mounting LH and the pad clip.

Captions in illustration

	MP grease No.2 or equivalent

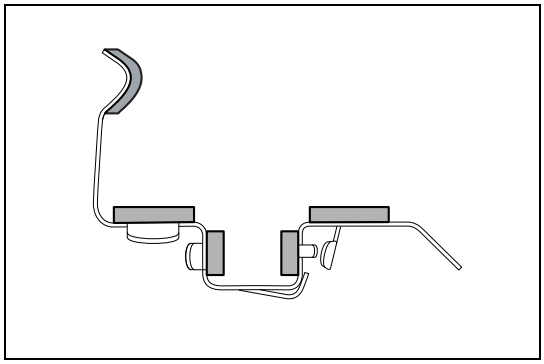

8. Installation of pad clip
   (1) Apply a thin coat of MP grease No.2 or equivalent to the part where the disc brake pad kit RR of the pad clip contacts.

Captions in illustration

	MP grease No.2 or equivalent

   (2) Install the pad clip to the rear disc brake cylinder mounting LH.

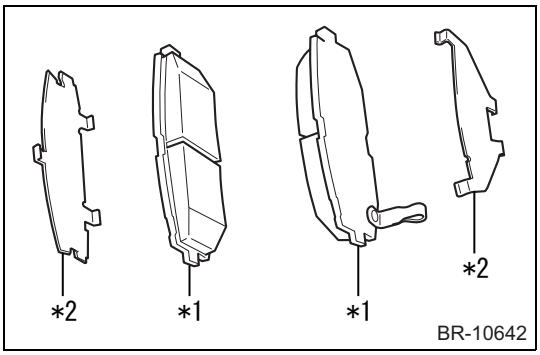

9. Installation of rear disc brake anti-squeal shim kit
   (1) Install the rear disc brake anti-squeal shim kit to the disc brake pad kit RR.

Captions in illustration

*1	Disc brake pad kit RR
*2	Rear disc brake anti-squeal shim kit

10. Installation of disc brake pad kit RR
    (1) Install the disc brake pad kit RR to the rear disc brake cylinder mounting LH.
11. Installation of disc brake cylinder ASSY RR LH
    (1) Install the disc brake cylinder ASSY RR LH to the rear disc brake cylinder mounting LH with 2 bolts.
    Standard value:T=26N·m {265kgf·cm} {19.2ft·lbf}
12. Connection of rear left flexible hose
    (1) Using a new union bolt, connect the rear left flexible hose via 2 new gaskets.
    Standard value:T=26N·m {265kgf·cm} {19.2ft·lbf}
13. Brake fluid refill (Refer to BR - 8)
14. Air bleeding of brake system (Refer to BR - 8)
15. Brake fluid leak check
16. Brake fluid level check (Refer to BR - 12)
17. Installation of rear tire
    Standard value:T=120N·m {1224kgf·cm} {88.5ft·lbf}

Installation (brembo type)

NOTE:

- The following procedure is for LH side.
- Service the LH side and the RH side using the same procedure.

1. Installation of disc rotor
   (1) Aligning the mark which you put at the time of removal, install the disc rotor to the axle hub.
   NOTE:
   When replacing the disc rotor with a new one, select the position where the disc rotor runout becomes the minimum and install it.
2. Clearance adjustment of disc and lining (Refer to PB - 24)
3. Installation of parking brake shoe adjusting hole plug
   (1) Install the parking brake shoe adjusting hole plug to the disc rotor.

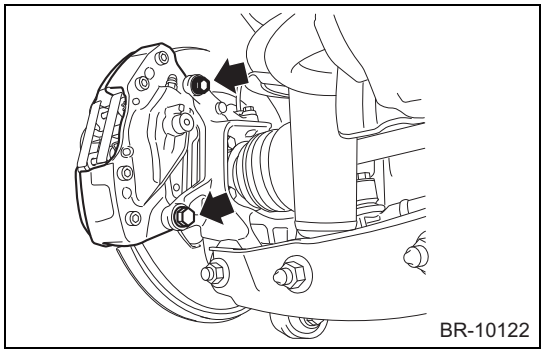
BR-10122

4. Installation of caliper body ASSY
   (1) Install the caliper body ASSY with 2 bolts.
   Standard value:T=73N·m {744kgf·cm} {53.8ft·lbf}

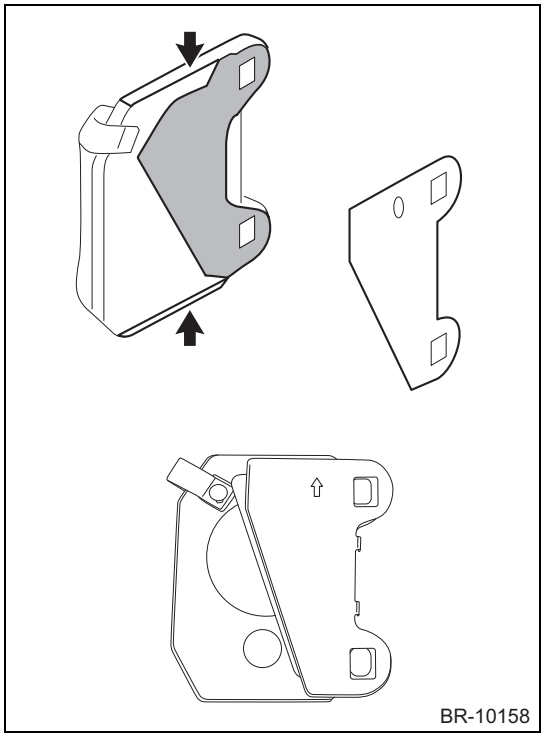
BR-10158

5. Installation of pad disc brake rear
   (1) Apply a thin coat of grease to the side surface of pad disc brake rear and shim installation surface of pad disc brake rear.

Captions in illustration

▭	Disc brake grease II or equivalent
➡	MP grease No.2 or equivalent

   (2) Install the pad disc brake rear.
   NOTE:
   Install so that the arrow faces upward.
   (3) Install the cross spring, pin disc brake and clip slide pin.

6. Connection of rear left flexible hose
   (1) Using a new union bolt, connect the rear left flexible hose via 2 new gaskets.
   Standard value:T=26N·m {265kgf·cm} {19.2ft·lbf}
7. Brake fluid refill (Refer to BR - 8)
8. Air bleeding of brake system (Refer to BR - 8)
9. Brake fluid leak check
10. Brake fluid level check (Refer to BR - 12)
11. Installation of rear tire
   Standard value:T=120N·m {1224kgf·cm} {88.5ft·lbf}

Rear brake flexible hose

Exploded view

Ventilated disc brake

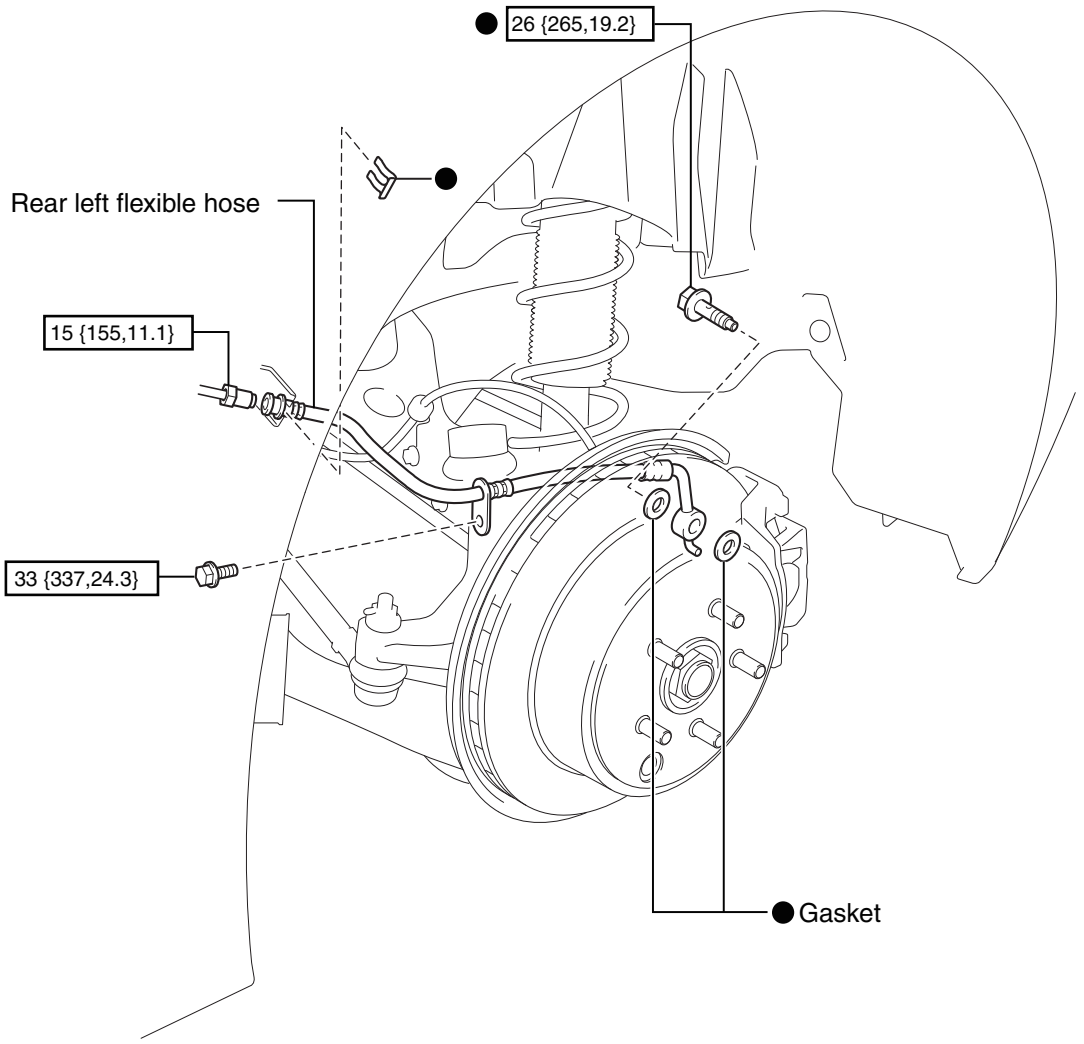

N*m (kgf*cm, ft*lbf) : Tightening torque

● Non-reusable parts

BR-10025

Removal

NOTE:

- The following procedure is for LH side.
- Service the LH side and the RH side using the same procedure.
- The procedures described below are for the normal type. For the brembo type, perform the same procedures as the normal type.

1. Removal of rear tire

2. Draining of brake fluid (Refer to RB - 6)

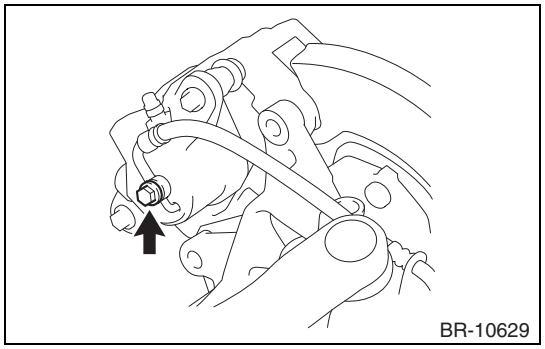

3. Removal of rear left flexible hose
   (1) Remove the union bolt and 2 gaskets to disconnect the rear left flexible hose from the disk brake cylinder ASSY RR LH.

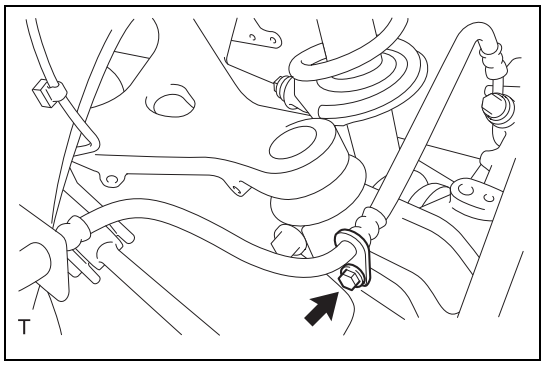

   (2) Remove the bolt and disconnect the rear left flexible hose from the rear carrier LH.

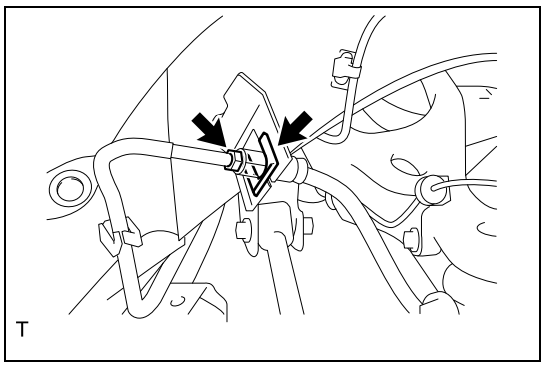

   (3) Secure the rear left flexible hose with a spanner, and disconnect the brake tube using a flare-nut wrench.
   CAUTION:
   - Do not bend or damage the brake tubes.
   - Do not let foreign matter including dirt and dust enter the connection part of the brake tube.

   (4) Remove the clip.
   (5) Remove the rear left flexible hose.

Installation

NOTE:
- The following procedure is for LH side.
- Perform the same procedures for the RH and LH side.
- The procedures described below are for the normal type. For the brembo type, perform the same procedures as the normal type.

1. Installation of rear left flexible hose
   (1) With a new clip, install the rear left flexible hose.
   CAUTION:
   Securely attach the clip as far as it will go.
   (2) Secure the rear left flexible hose with a spanner, and connect the brake tube to the rear left flexible hose using a flare-nut wrench.
   Standard value:T=15N·m {155kgf·cm} {11.1ft·lbf}
   CAUTION:
   - Do not bend or damage the brake tubes.
   - Do not let foreign matter including dirt and dust enter the connection part of the brake tube.

   (3) With a bolt, connect the rear left flexible hose to the rear carrier LH.
   Standard value:T=33N·m {337kgf·cm} {17.7ft·lbf}
   (4) Using a new union bolt, install the rear left flexible hose to the disc brake cylinder ASSY RR LH via two new gaskets.

Standard value:T=26N·m {265kgf·cm} {19.2ft·lbf}

2. Brake fluid refill (Refer to BR - 8)
3. Air bleeding of brake system (Refer to BR - 8)
4. Brake fluid leak check
5. Brake fluid level check (Refer to BR - 12)
6. Installation of rear tire
   Standard value:T=120N·m {1224kgf·cm} {88.5ft·lbf}

Parking brake

Parking brake system
- Adjustment PB-2
- Symptom table PB-3

Parking brake lever ASSY
- Exploded view PB-4
- Removal PB-5
- Installation PB-6

Parking brake cable ASSY
- Exploded view PB-7
- Removal PB-9
- Installation PB-12

Parking brake ASSY
- Exploded view PB-13
- Disassembly PB-16
- Inspection PB-20
- Assembly PB-20

Parking brake switch ASSY
- Exploded view PB-26
- Removal PB-26
- Installation PB-26
- Unit inspection PB-27

Parking brake system

Adjustment

1. Parking brake lever stroke check
   (1) Strongly pull the parking brake lever once.
   (2) Release the parking brake lever.
   (3) While slowly pulling the parking brake lever, count the number of notches.
   Standard value: 7 - 8 notches [Operation force of 200 N{20 kgf/45.0 lbf}]
   NOTE:
   If it is not within the specified value, adjust the parking brake lever stroke.
2. Adjustment of parking brake
   (1) Remove the console cover. (Refer to IT - 37)
   (2) Release the parking brake.

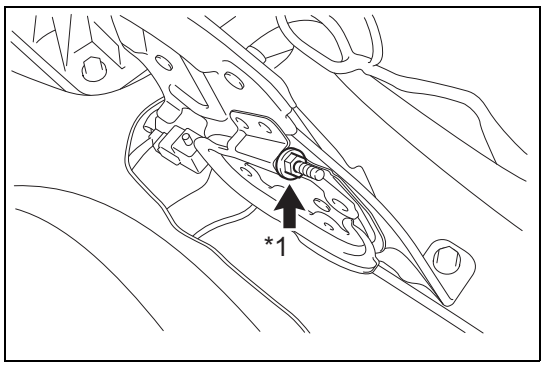

   (3) Loosen the adjusting nut.

Captions in illustration

*1	Adjusting nut

   (4) Remove the rear tire.
   (5) Temporarily tighten the rear wheel nut.
   (6) Remove the service hole plug of the rear disc. Turn the rear disc until the service hole is aligned to the adjusting screw.
   (7) Using a flat tip screwdriver, turn the adjusting screw in the extension direction until the parking brake shoe is in close contact with the disc.

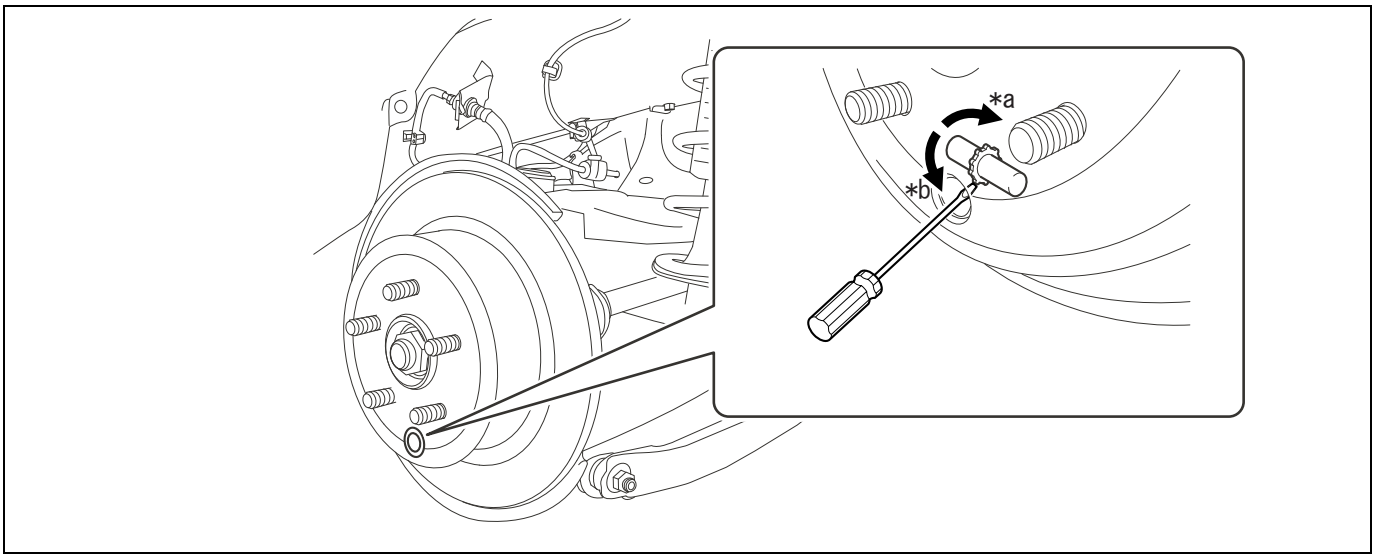

Captions in illustration

*a	Extend	*b	Contract

   (8) Turn the adjusting screw in the retract direction until the rear disc rotates lightly.
   NOTE:
   Standard number of notches to return: 10
   (9) Check for brake drag.
   (10) Install the service hole plug to the rear disc.
   (11) After operating the parking brake lever 3 to 4 times, turn the adjusting nut until the lever stroke is at the specified value.

Standard value: 7 - 8 notches [Operation force of 200 N{20 kgf/45.0 lbf}]

(12) Tighten the adjusting nut.

(13) After operating the parking brake lever 3 to 4 times, make sure that the lever stroke is within the specified value.
Standard value: 7 - 8 notches [Operation force of 200 N{20 kgf/45.0 lbf}]

(14) Check for brake drag.

(15) Remove the rear wheel nut.

(16) Install the rear tires.
Standard value: T=120N·m {1224kgf·cm} {88.5 ft·lbf}

(17) Install the console cover. (Refer to IT - 38)

3. Brake warning light check
   (1) Check that the brake warning light illuminates when the parking brake lever is operated.
   Criteria: Make sure that the brake warning light illuminates without fail when the parking brake lever is pulled to the first notch.

Symptom table

Determine the problem by referring to the table below. Check each part in order, and replace the applicable parts if necessary.

Symptoms	Inspection items	Reference pages
Brake drag	Parking brake lever stroke (improper adjustment)	PB - 2
	Parking brake cable front (sticking)	PB - 9
	Parking brake cable rear (sticking)	PB - 9
	Parking brake shoe clearance (improper adjustment)	PB - 24
	Parking brake shoe (crack or deformation)	PB - 16
	Tension spring (faulty)	PB - 16

Parking brake lever ASSY

Exploded view

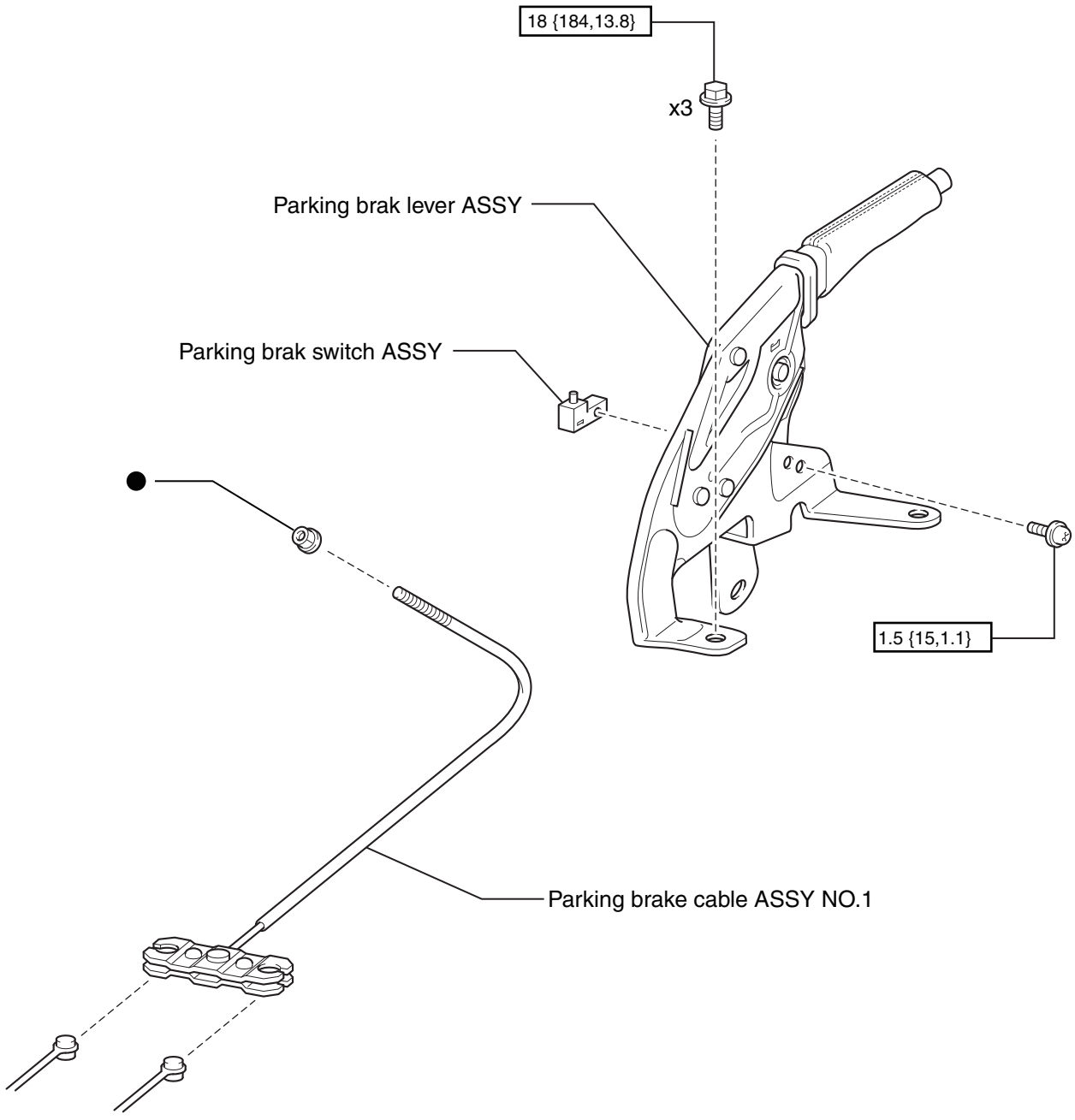

N*m {kgf*cm,ft*lbf}: Tightening torque

● Non-reusable parts

PB-10002

Removal

1. Removal of console box ASSY (Refer to IT - 37)
2. Removal of parking brake cable ASSY No.1
   (1) Release the parking brake.

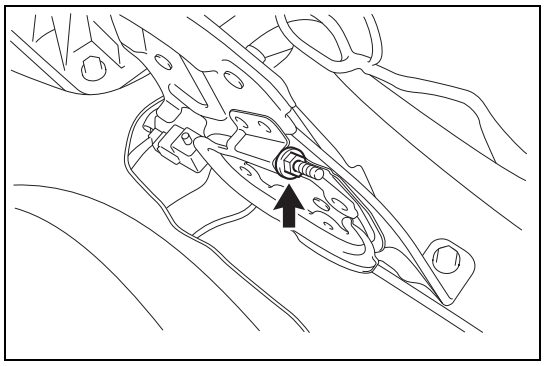

   (2) Remove the adjusting nut.

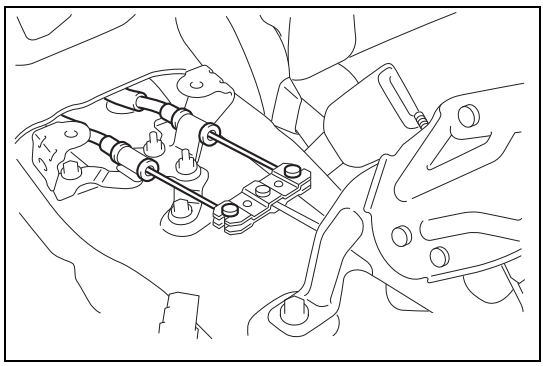

   (3) Disconnect the parking brake cable ASSY No.2 and No.3 from the parking brake cable ASSY No.1.
   (4) Remove the parking brake cable ASSY No.1 from the parking brake lever.
3. Removal of parking brake lever ASSY
   (1) Disconnect the connector for the parking brake switch ASSY.

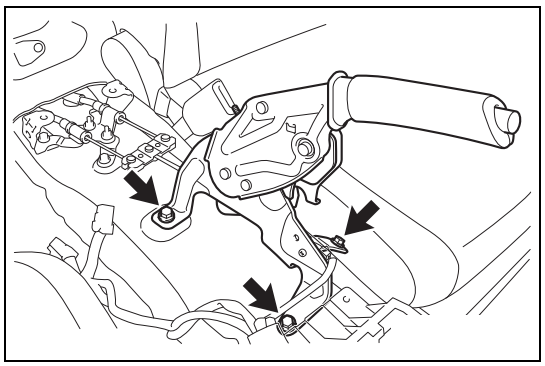

   (2) Remove 3 bolts and then the parking brake lever ASSY.

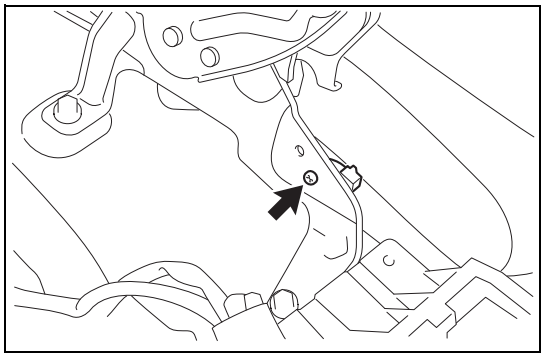

4. Removal of parking brake switch ASSY
   (1) Remove the screw and then the parking brake switch ASSY.

Installation

1. Installation of parking brake switch ASSY
   (1) Install the parking brake switch ASSY with a screw.
   Standard value:T=1.5N·m {15kgf·cm} {1.1 ft·lbf}
2. Installation of parking lever ASSY
   (1) Install the parking brake lever ASSY with 3 bolts.
   Standard value:T=18N·m {184kgf·cm} {13.3ft·lbf}
   (2) Connect the connector for the parking brake switch ASSY.
3. Installation of parking brake cable ASSY No.1
   (1) Attach the parking brake cable ASSY No.1 to the parking brake lever and then secure it with an adjusting nut temporarily.
   (2) Connect the parking brake cable No.2 and No.3 to the parking brake cable ASSY No.1.
4. Parking brake lever stroke check (Refer to PB - 2)
5. Adjustment of parking brake lever stroke (Refer to PB - 2)
6. Installation of console box ASSY (Refer to IT - 38)

Parking brake cable ASSY

Exploded view

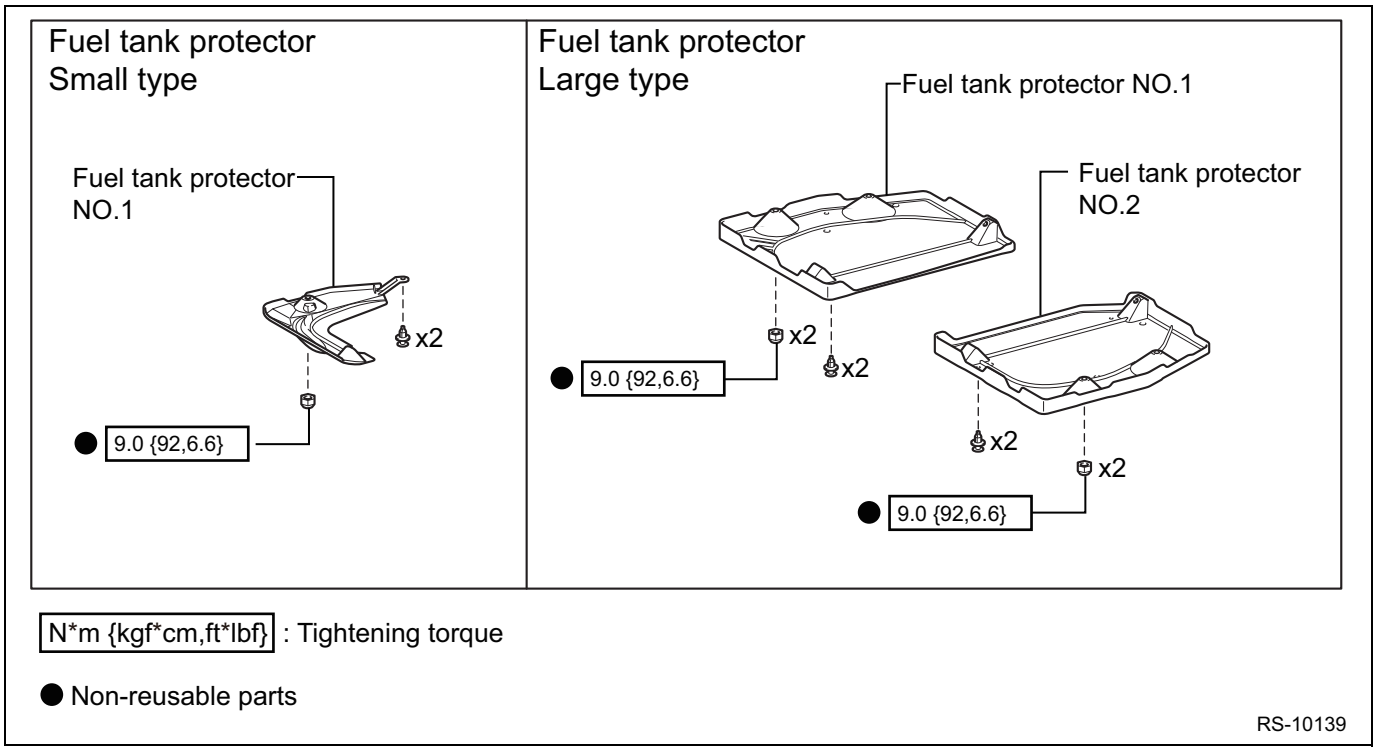

N*m {kgf*cm,ft*lbf} : Tightening torque

● Non-reusable parts

RS-10139

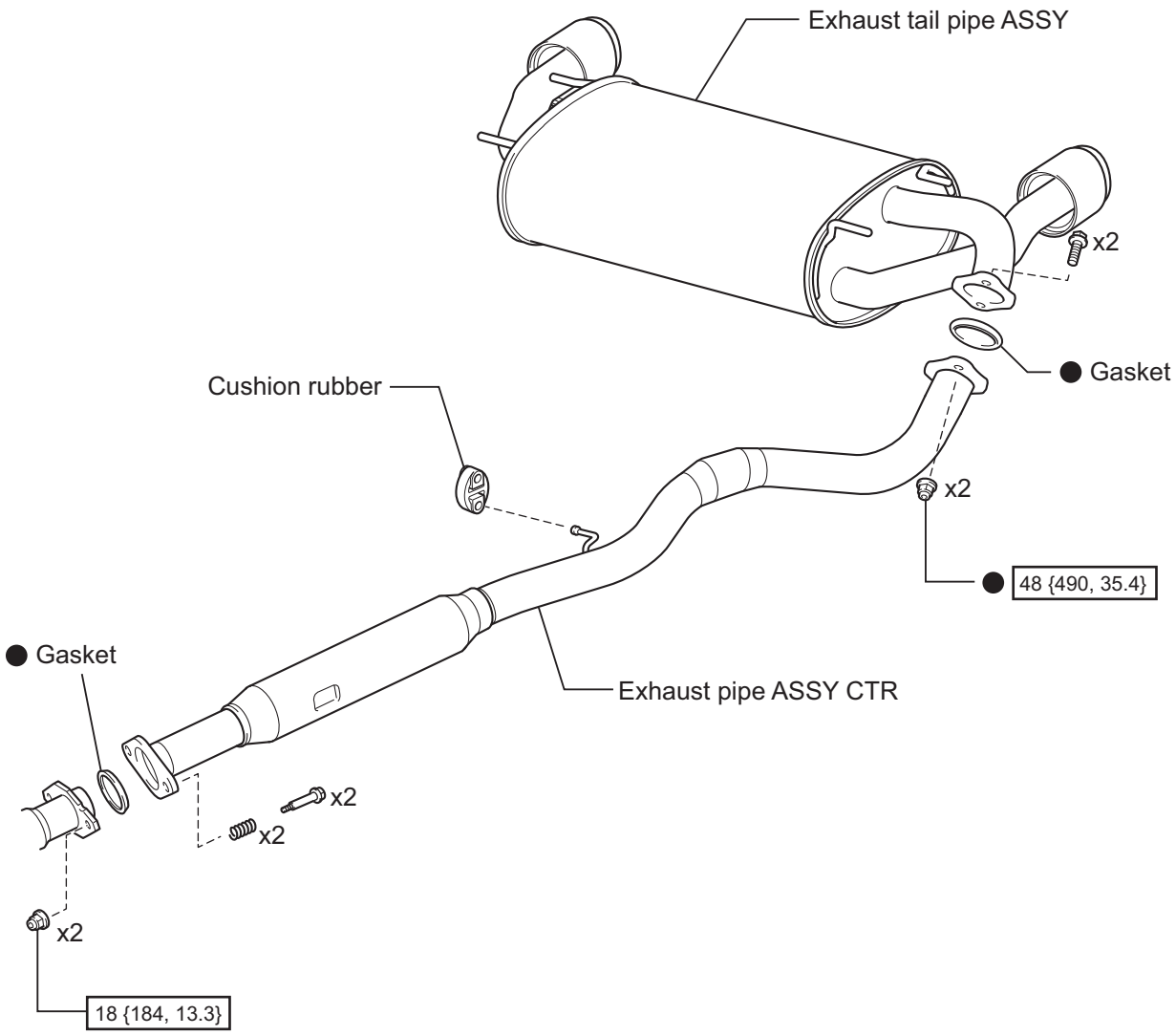

N*m {kgf*cm, ft*lbf}: Tightening torque

● Non-reusable part

PB-10004

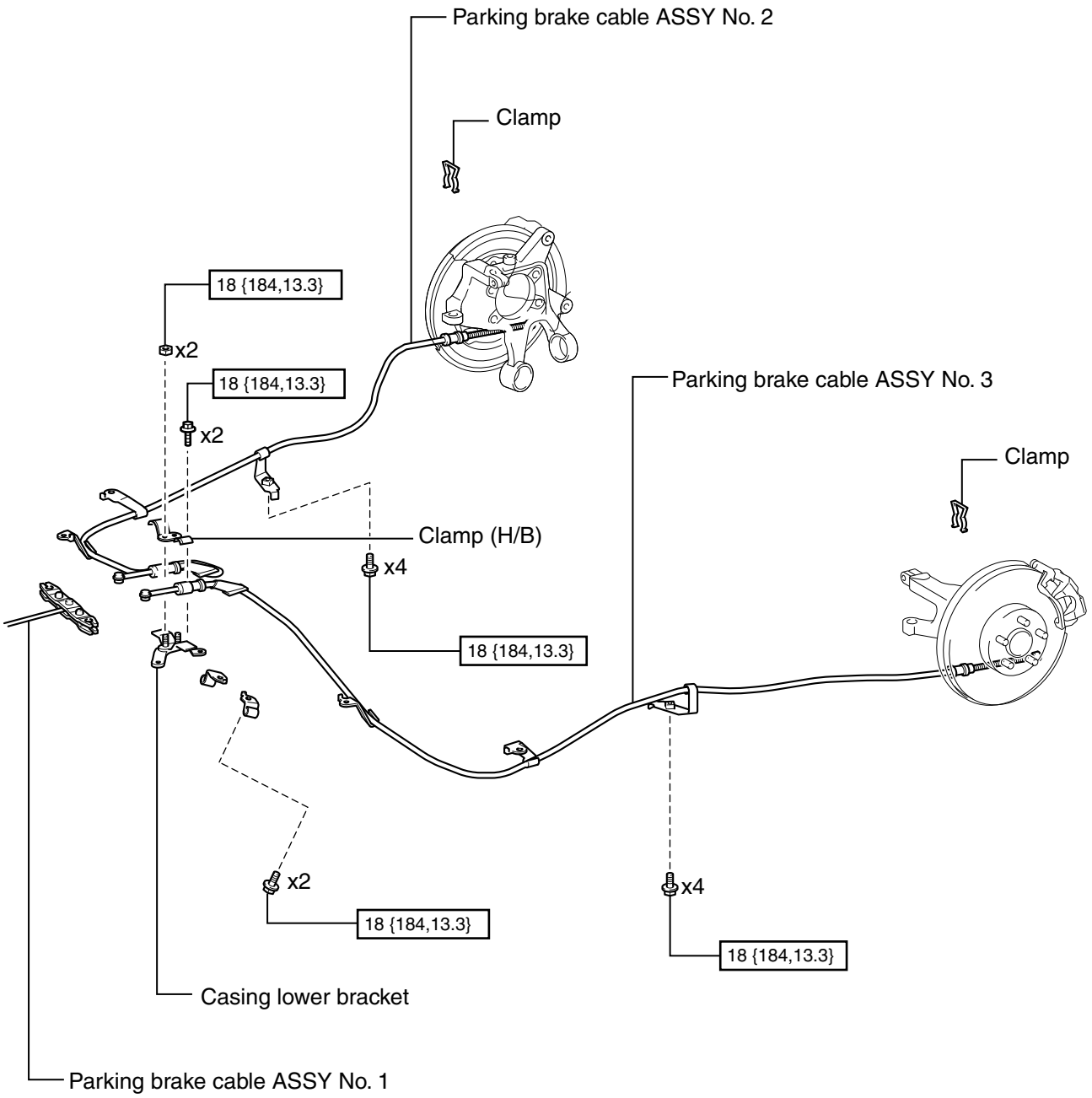

N•m {kgf•cm, ft•lbf} : Tightening torque

PB-00412

PB

Removal

1. Removal of console box ASSY (Refer to IT - 33)
2. Removal of parking brake cable ASSY No.1 (Refer to PB - 5)
3. Disconnection of parking brake ASSY (Refer to PB - 16)

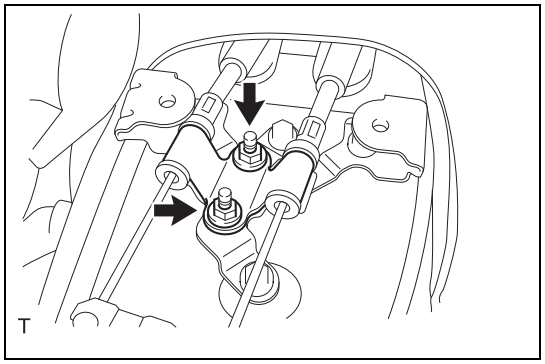

4. Removal of clamp (H/B)
   (1) Remove 2 nuts and then the clamp (H/B).

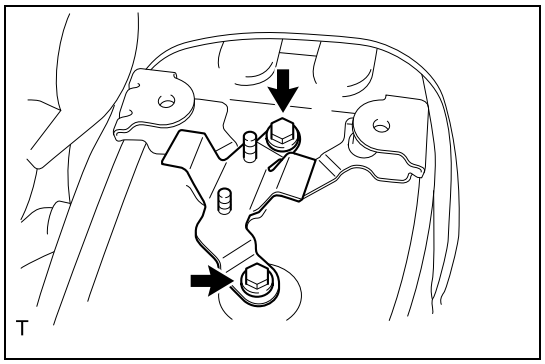

5. Removal of casing lower bracket
   (1) Remove 2 bolts, and then remove the casing lower bracket.

6. Removal of fuel tank protector (Refer to FU - 68)

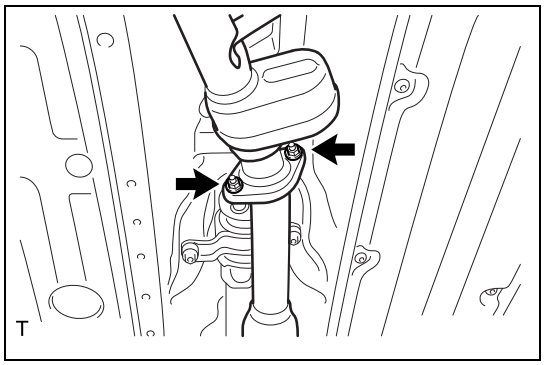

7. Removal of exhaust pipe ASSY CTR
   (1) Remove the two nuts, two bolts and two compression springs to remove the exhaust pipe ASSY CTR.

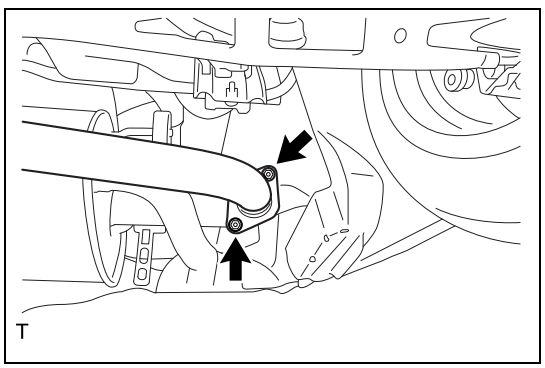

   (2) Remove the two nuts and two bolts to remove the exhaust tail pipe ASSY.

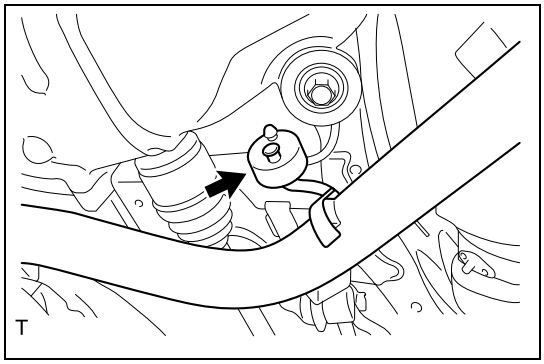

(3) Remove the cushion rubber, and remove the exhaust pipe ASSY CTR.
(4) Remove the gasket.

8. Removal of propeller shaft center bearing ASSY (Refer to DP - 14)
9. Removal of parking brake cable ASSY No.3
   (1) Remove 4 bolts and then disconnect the parking brake cable ASSY No.3 from the body.

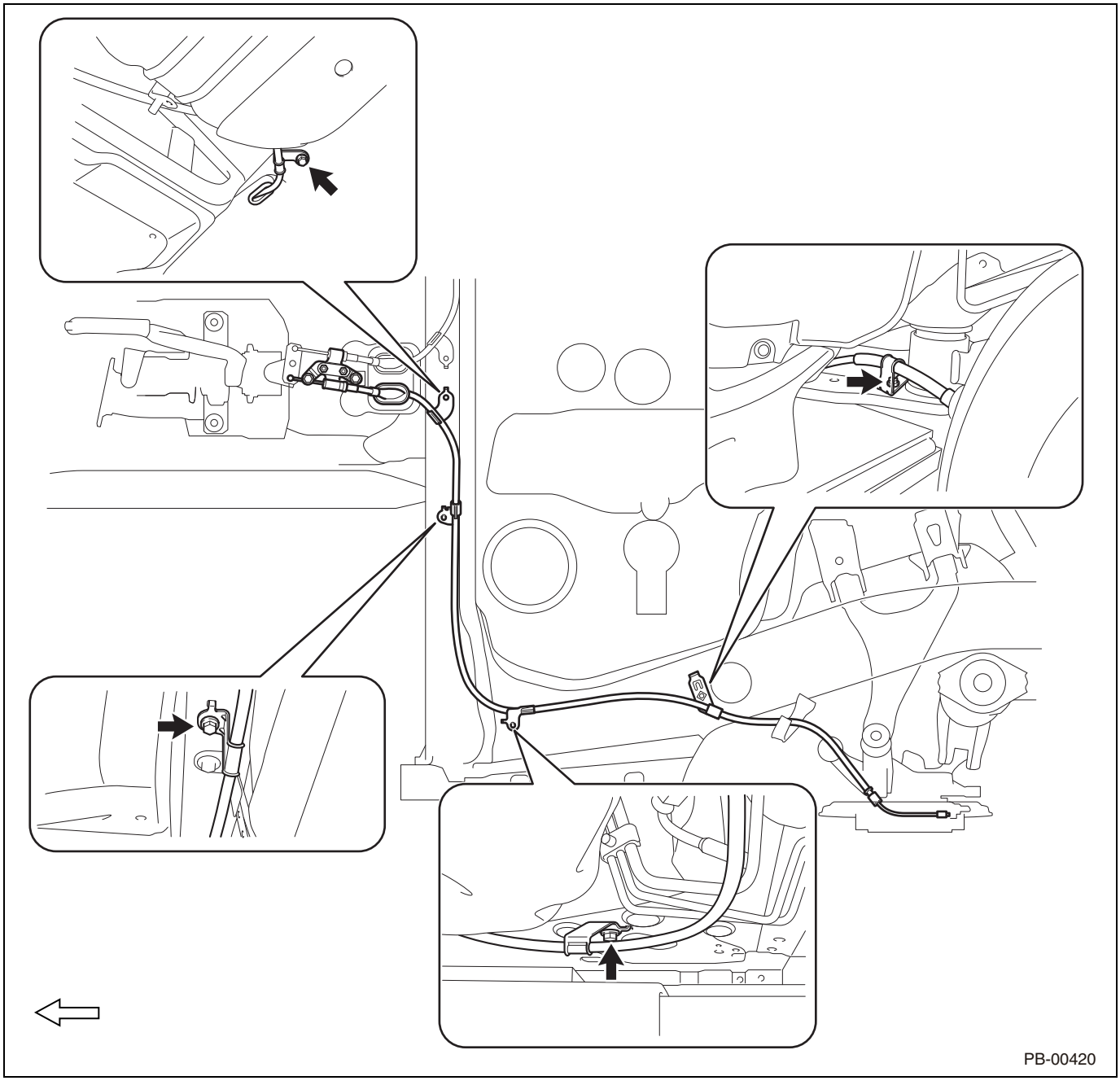

Captions in illustration

➡	Bolt	⇨	Front of vehicle

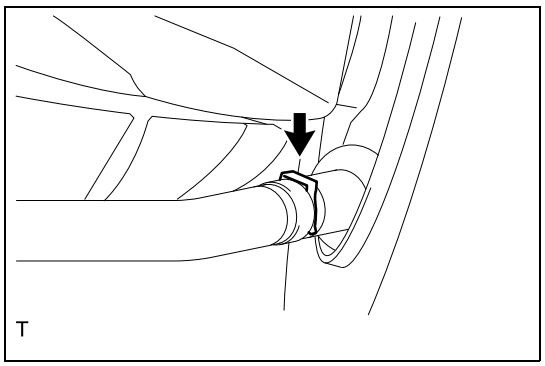

(2) Remove the clamp, and then remove the parking brake cable ASSY No. 3.

10. Removal of parking brake cable ASSY No.2
    NOTE:
    Perform the same procedures for the parking brake cable ASSY No.3.

Installation

1. Installation of parking brake cable ASSY No.3
   (1) Push the parking brake cable ASSY No.3 into the backing plate, and then install it with the clamp.
   (2) Install the parking brake cable ASSY No.3 to the body with 4 bolts.
   Standard value:T=18N·m {184kgf·cm} {13.3ft·lbf}
2. Installation of parking brake cable ASSY No.2
   NOTE:
   Perform the same procedures for the parking brake cable ASSY No.3.
3. Installation of propeller shaft center bearing ASSY (Refer to DP - 16)
4. Installation of exhaust pipe ASSY CTR
   (1) Install the exhaust pipe ASSY CTR with the cushion rubber.
   (2) With 2 bolts and 2 new nuts, install the exhaust pipe ASSY CTR to the exhaust tail pipe ASSY via a new gasket.
   Standard value:T=48N·m {490kgf·cm} {35.4ft·lbf}
   (3) With 2 bolts, 2 nuts, and 2 compression springs, install the exhaust pipe ASSY CTR to the exhaust pipe ASSY FR via a new gasket.
   Standard value:T=18N·m {184kgf·cm} {13.3ft·lbf}
5. Installation of fuel tank protector (Refer to FU - 71)
6. Installation of casing lower bracket
   (1) Install the casing lower bracket to the body with 2 bolts.
   Standard value:T=18N·m {184kgf·cm} {13.3ft·lbf}
7. Installation of clamp (H/B)
   (1) Install the clamp (H/B) to the casing lower bracket to the body with 2 nuts.
   Standard value:T=18N·m {184kgf·cm} {13.3ft·lbf}
8. Installation of parking brake cable ASSY No.1 (Refer to PB - 6)

Parking brake ASSY

Exploded view

Normal type

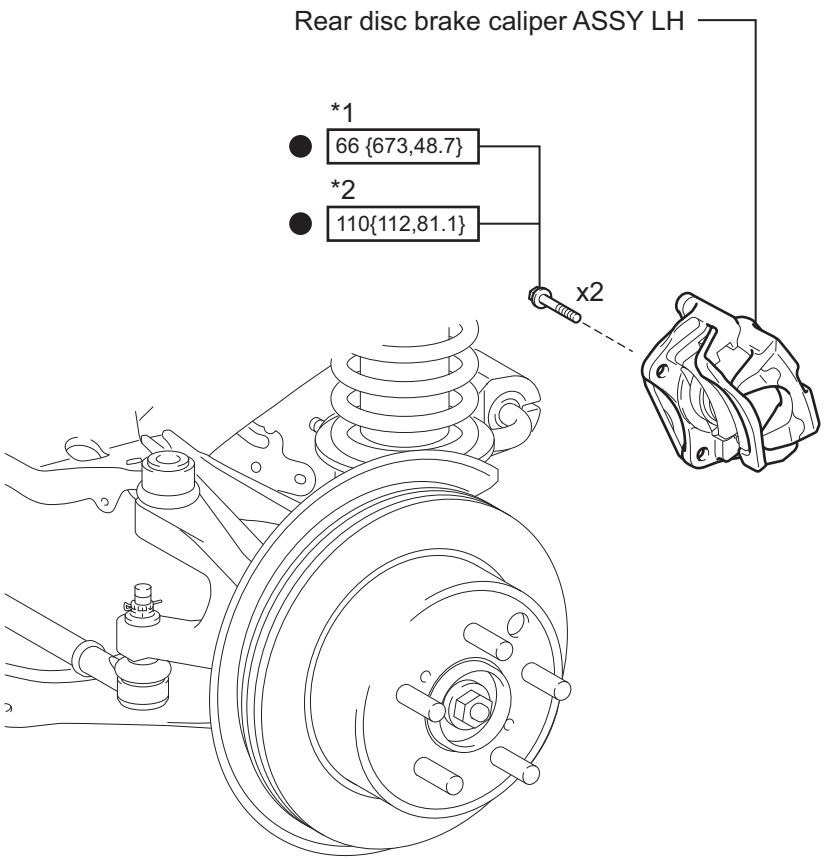

N*m {kgf*cm,ft*lbf} : Tightening torque

● Non-reusable parts

*1: Width across flat 14 mm {0.55 in}

*2: Width across flat 17 mm {0.67 in}

PB-10037

Brembo type

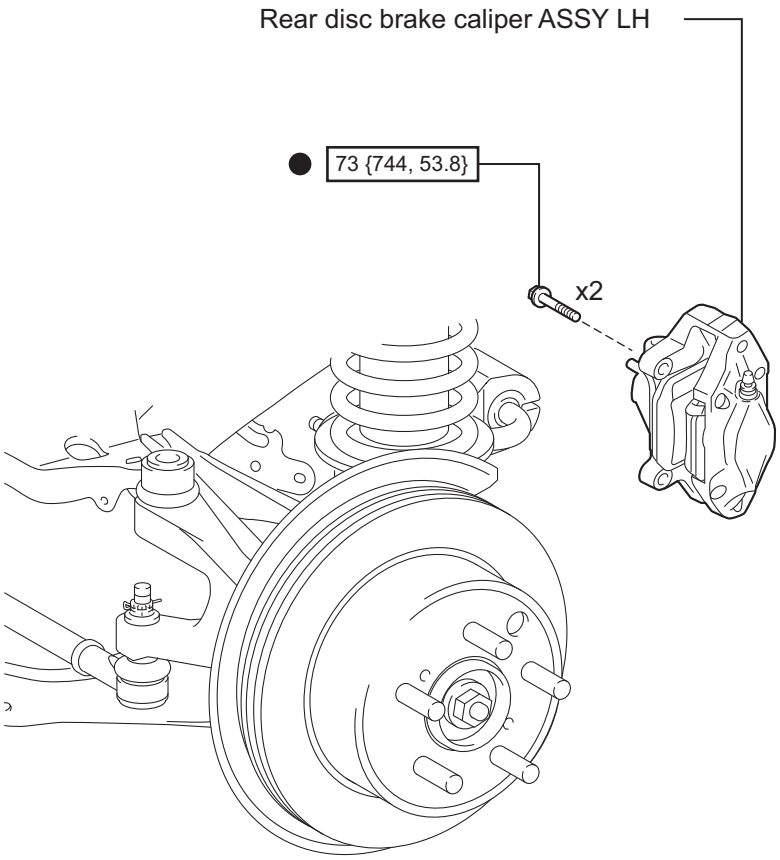

N*m {kgf*cm, ft*lbf}: Tightening torque

● Non-reusable part

PB-10009

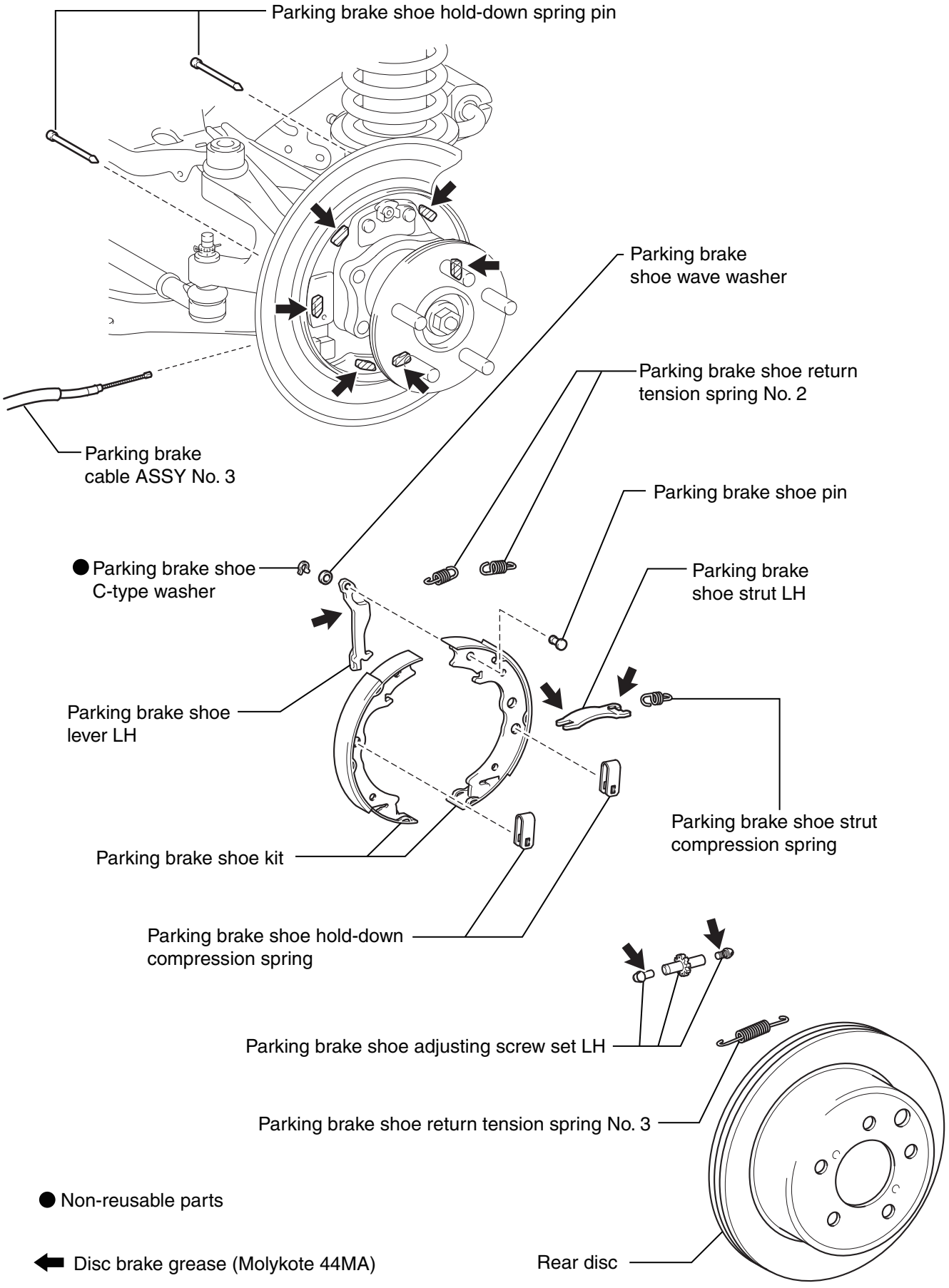
Parking brake shoe hold-down spring pin
Parking brake shoe wave washer
Parking brake shoe return tension spring No. 2
Parking brake cable ASSY No. 3
Parking brake shoe pin
● Parking brake shoe C-type washer
Parking brake shoe strut LH
Parking brake shoe lever LH
Parking brake shoe strut compression spring
Parking brake shoe kit
Parking brake shoe hold-down compression spring
Parking brake shoe adjusting screw set LH
Parking brake shoe return tension spring No. 3
● Non-reusable parts
Disc brake grease (Molykote 44MA)
Rear disc
PB-00417

Disassembly

1. Removal of rear tire

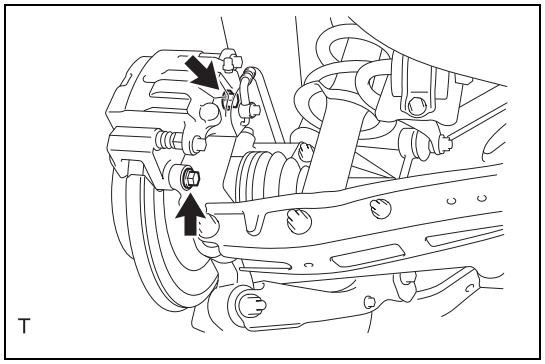

2. Disconnection of rear disc brake caliper ASSY LH
   (1) Remove 2 bolts and then disconnect the rear disc brake caliper from the rear axle carrier.
   CAUTION:
   Hang the brake caliper, using a wire or equivalent.

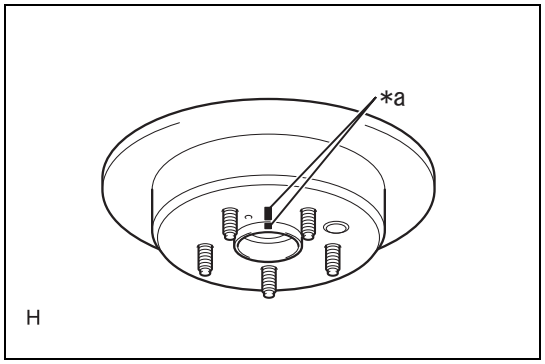

3. Removal of rear disc
   (1) Put alignment marks on the rear disc and the axle hub.

Captions in illustration

*a	Alignment marks

   (2) Release the parking brake and remove the rear disc.
   NOTE:
   If it is difficult to remove the rear disc, insert a flat head screwdriver from the rear disc service hole and rotate the adjusting screw to contract the parking brake shoe.

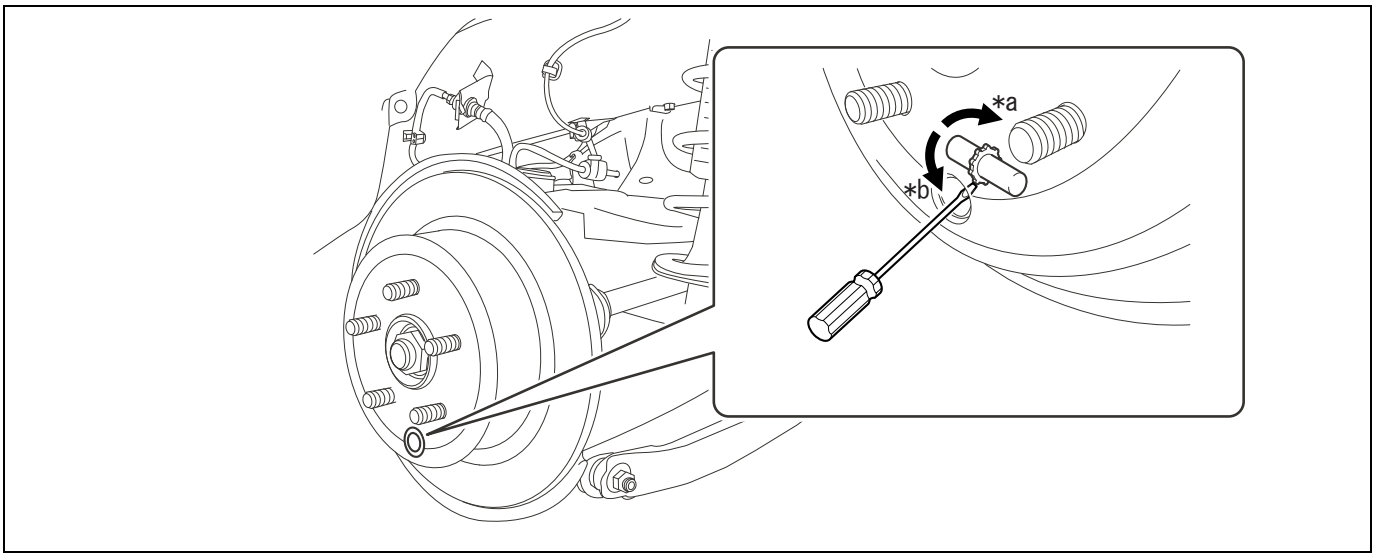

Captions in illustration

*a	Extend	*b	Contract

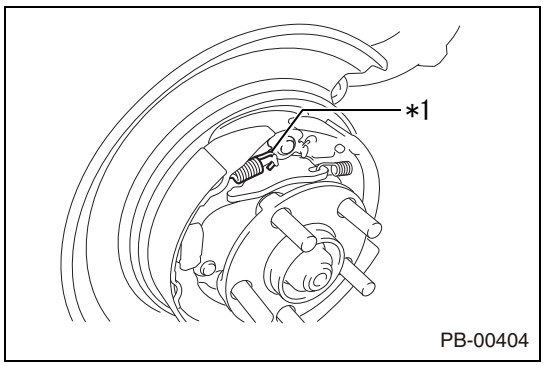

4. Removal of parking brake shoe return tension spring No.2 (installed to the front side)
   (1) Remove the parking brake shoe return tension spring No.2 (installed to the front side).

Captions in illustration

*1	Parking brake she return tension spring No.2

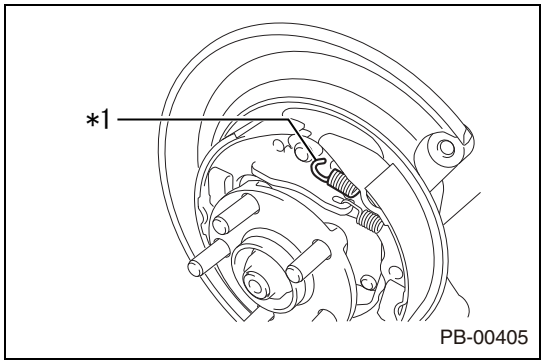

5. Removal of parking brake shoe return tension spring No.2 (installed to the rear side)
   (1) Remove the parking brake shoe return tension spring No.2 (installed to the front side).

Captions in illustration

*1	Parking brake she return tension spring No.2

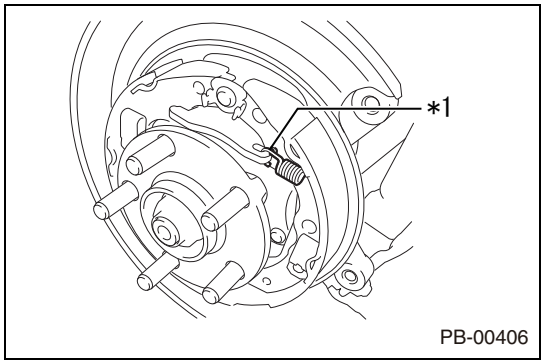

6. Removal of parking brake shoe strut compression spring
   (1) Remove the parking brake shoe strut compression spring.

Captions in illustration

*1	Parking brake shoe strut compression spring

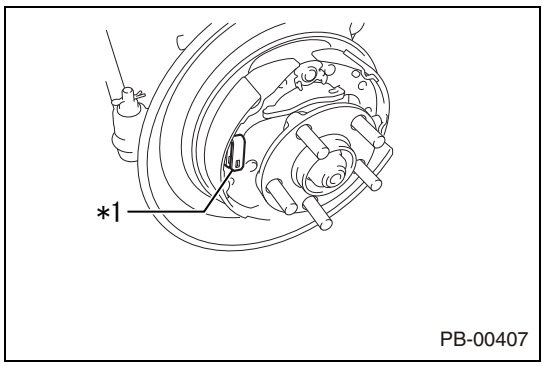

7. Removal of parking brake shoe hold-down compression spring (installed to the front side)
   (1) Remove the parking brake shoe hold-down compression spring (installed to the front side).

Captions in illustration

*1	Parking brake shoe hold-down compression spring

8. Removal of parking brake shoe hold-down spring pin (installed to the front side)
   (1) Remove the tension pin (installed to the front side).

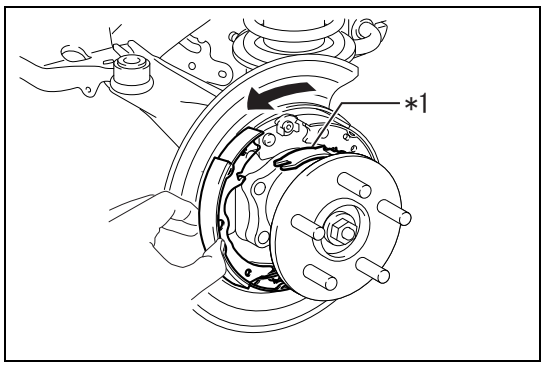

9. Removal of parking brake shoe strut LH
   (1) Spread the parking brake shoe kit outward with hands and remove the parking brake shoe strut LH.

Captions in illustration

*1	Parking brake shoe strut LH

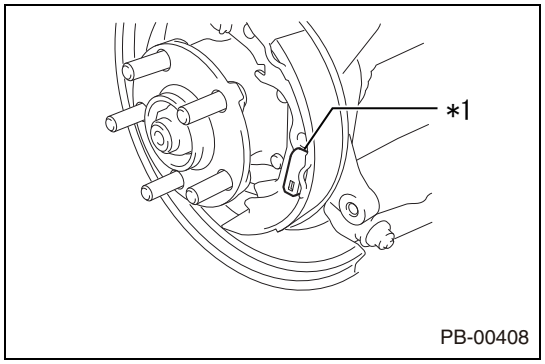

10. Removal of parking brake shoe hold-down compression spring (installed to the rear side)
    (1) Remove the parking brake shoe hold-down compression spring (installed to the rear side).

Captions in illustration

*1	Parking brake shoe hold-down compression spring

11. Removal of parking brake shoe hold-down spring pin (installed to the rear side)
    NOTE:
    Service the parking brake shoe hold-down spring pin (installed to the rear side) using the same procedures for the parking brake shoe hold-down spring pin (installed to the front side).

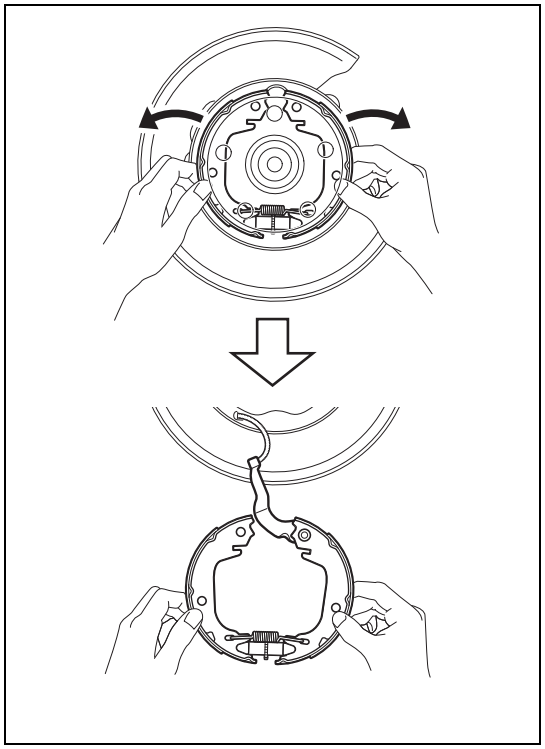

12. Removal of parking brake shoe adjusting screw set LH
    (1) Spread the parking brake shoe kit outward by hand and pull it out from the lower side of the vehicle.

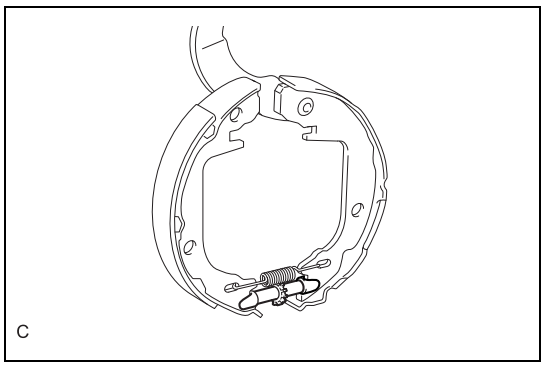

    (2) Remove the parking brake shoe adjusting screw set LH from the parking brake shoe kit.

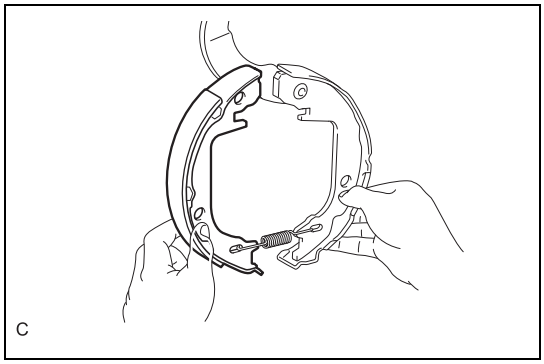

13. Removal of parking brake shoe kit
    (1) Remove the parking brake shoe kit from the parking brake shoe return tension spring No.3.

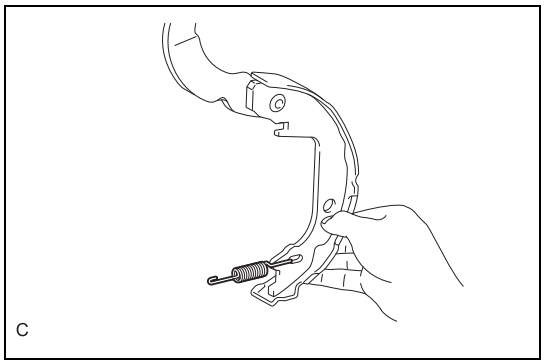

14. Removal of parking brake shoe return tension spring No.3.
    (1) Remove the parking brake shoe return tension spring No.3 from the parking brake shoe kit.

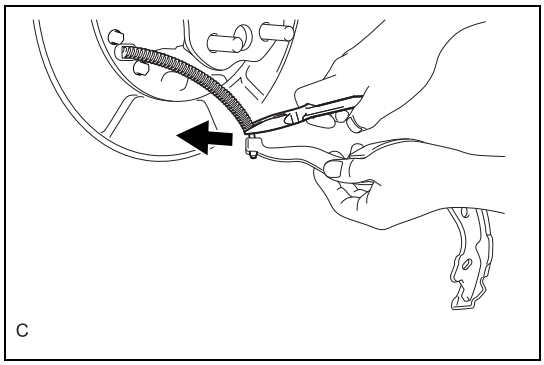

15. Disconnection of parking brake shoe lever LH
    (1) Disconnect the parking brake shoe lever LH.

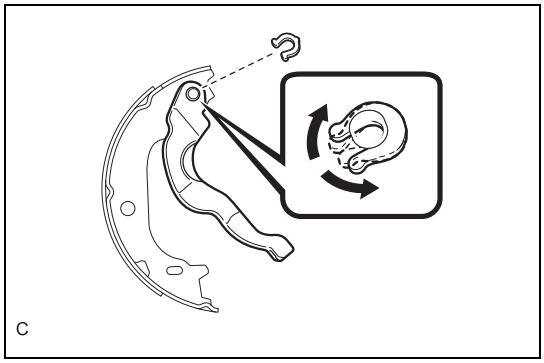

16. Removal of parking brake shoe C type washer
    (1) As shown in the figure, spread the parking brake shoe C type washer and remove it from the parking brake shoe kit.

17. Removal of parking brake shoe wave washer
    (1) Remove the parking brake shoe wave washer.
18. Removal of parking brake shoe pin
    (1) Remove the parking brake shoe pin.

Inspection

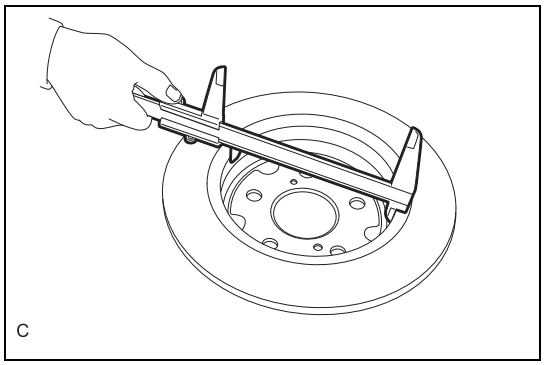

1. Rear disc inner diameter check
   (1) Using a caliper, check the inner diameter of the disc.
   Limit: 191.0mm {7.52 in}
   Reference value: : 190.0mm {7.48 in} (New)

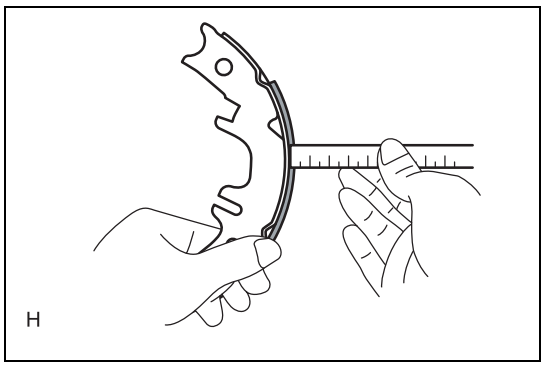

2. Parking brake shoe lining thickness check
   Limit: 1.5mm {0.059in}
   Reference value: : 3.5 mm {0.138 in} (New)
   CAUTION:
   Replace the right and left parts as a set. (for preventing the unequal distribution of the braking force)

Assembly

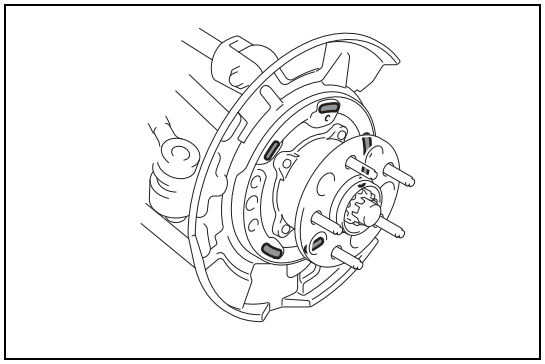

1. Applying grease to backing plate
   (1) Apply a thin coat of brake grease to the contacting part of the backing plate shoe.

Captions in illustration

▭	Brake grease (Molykote 44MA)

2. Installation of parking brake shoe pin
   (1) Install the parking brake shoe pin to the parking brake shoe kit.
3. Installation of parking brake shoe lever LH
   (1) Apply a thin coat of non-melting lubrication to the contacting part of the parking brake shoe lever LH and the parking brake shoe pin.
   (2) Install the parking brake shoe lever LH to the parking brake shoe kit.
4. Installation of parking brake shoe wave washer
   (1) Install the parking brake shoe wave washer.
5. Installation of parking brake shoe C type washer
   (1) Install a new parking brake shoe C type washer.

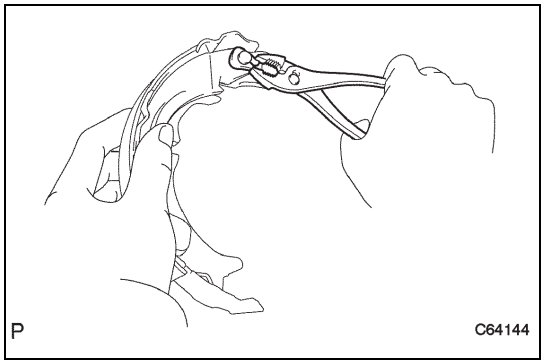

(2) Using a pliers, crimp the parking brake shoe C type washer.

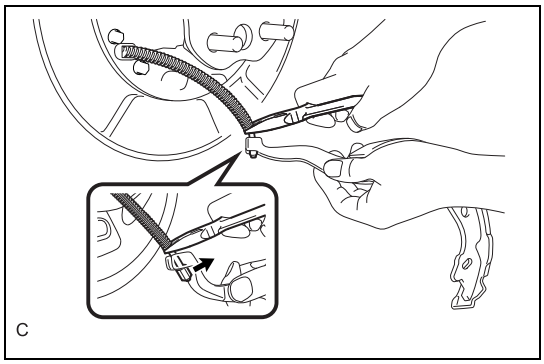

6. Installation of parking brake cable ASSY No.3
   (1) Using a pair of needle nose pliers, install the parking brake cable ASSY No.3 to the parking brake shoe lever LH.

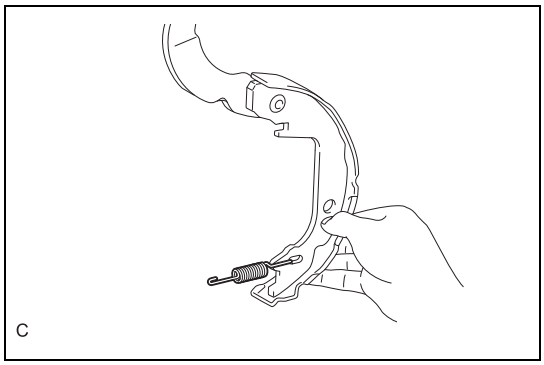

7. Installation of parking brake shoe return tension spring No.3.
   (1) Install the parking brake shoe return tension spring No.3 to the parking brake shoe kit.

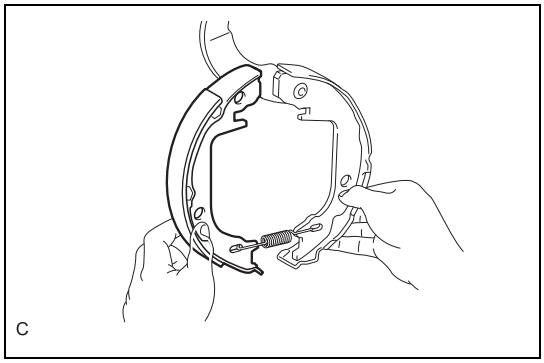

8. Installation of parking brake shoe kit (installed to the front side)
   (1) Install the parking brake shoe kit to the parking brake shoe return tension spring No.3.

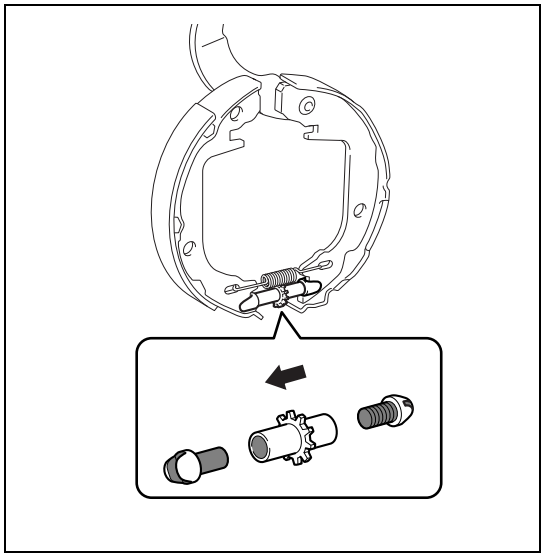

9. Installation of parking brake shoe adjusting screw set LH
   (1) Apply disc brake grease to the threaded portion of the parking brake shoe adjusting screw set LH and the piece-attaching part.
   (2) Install the parking brake shoe adjusting screw set LH to the parking brake shoe kit.
   CAUTION:
   The direction of parking brake shoe adjusting screw set is different for RH and LH. Be careful not to install them in the wrong direction.

Captions in illustration

▭	Disc brake grease (Molykote 44MA)
➡	Front of the vehicle (LH side) Rear of the vehicle (RH side)

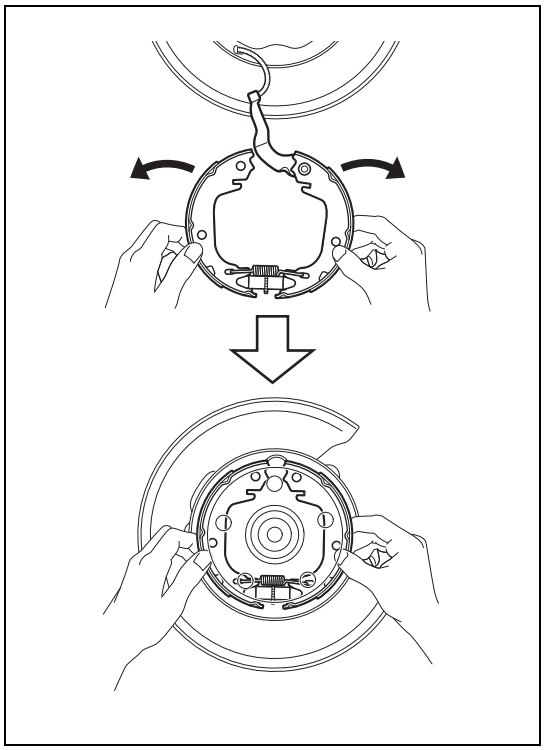

   (3) Spread the parking brake shoe kit outward by hand and align it to the backing plate.

10. Installation of parking brake shoe hold-down spring pin (installed to the rear side)
   (1) Install the parking brake shoe hold-down spring pin (installed to the rear side) to the backing plate.

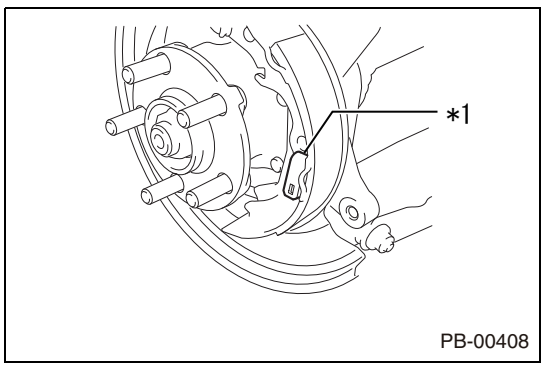

11. Installation of parking brake shoe hold-down compression spring (installed to the rear side)
   (1) Install the parking brake shoe hold-down compression spring (installed to the rear side).

Captions in illustration

*1	Parking brake shoe hold-down compression spring

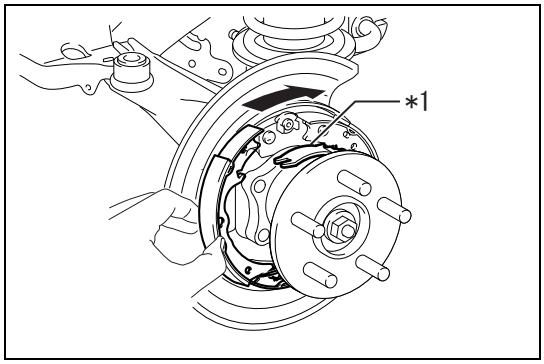

12. Installation of parking brake shoe strut LH
    (1) Spread the parking brake shoe kit outward by hand and install the parking brake shoe strut LH.

Captions in illustration

*1	Parking brake shoe strut LH

    (2) Install the parking brake shoe kit to the specified position.

13. Installation of parking brake shoe hold-down spring pin (installed to the front side)
    (1) Install the parking brake shoe hold-down spring pin (installed to the front side) to the backing plate.

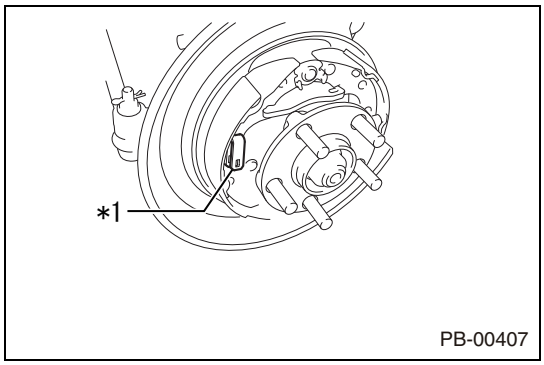

14. Installation of parking brake shoe hold-down compression spring (installed to the front side)
    (1) Install the parking brake shoe hold-down compression spring (installed to the rear side).

Captions in illustration

*1	Parking brake shoe hold-down compression spring

15. Installation of parking brake shoe strut compression spring
    (1) Install the parking brake shoe strut compression spring to the parking brake shoe strut LH.
16. Installation of parking brake shoe return tension spring No.2 (installed to the rear side)
    (1) Install the parking brake shoe return tension spring No.2 (installed to the rear side).
17. Installation of parking brake shoe return tension spring No.2 (installed to the front side)
    (1) Install the parking brake shoe return tension spring No.2 (installed to the front side).
18. Parking brake installation check
    (1) Make sure that each part is installed correctly.

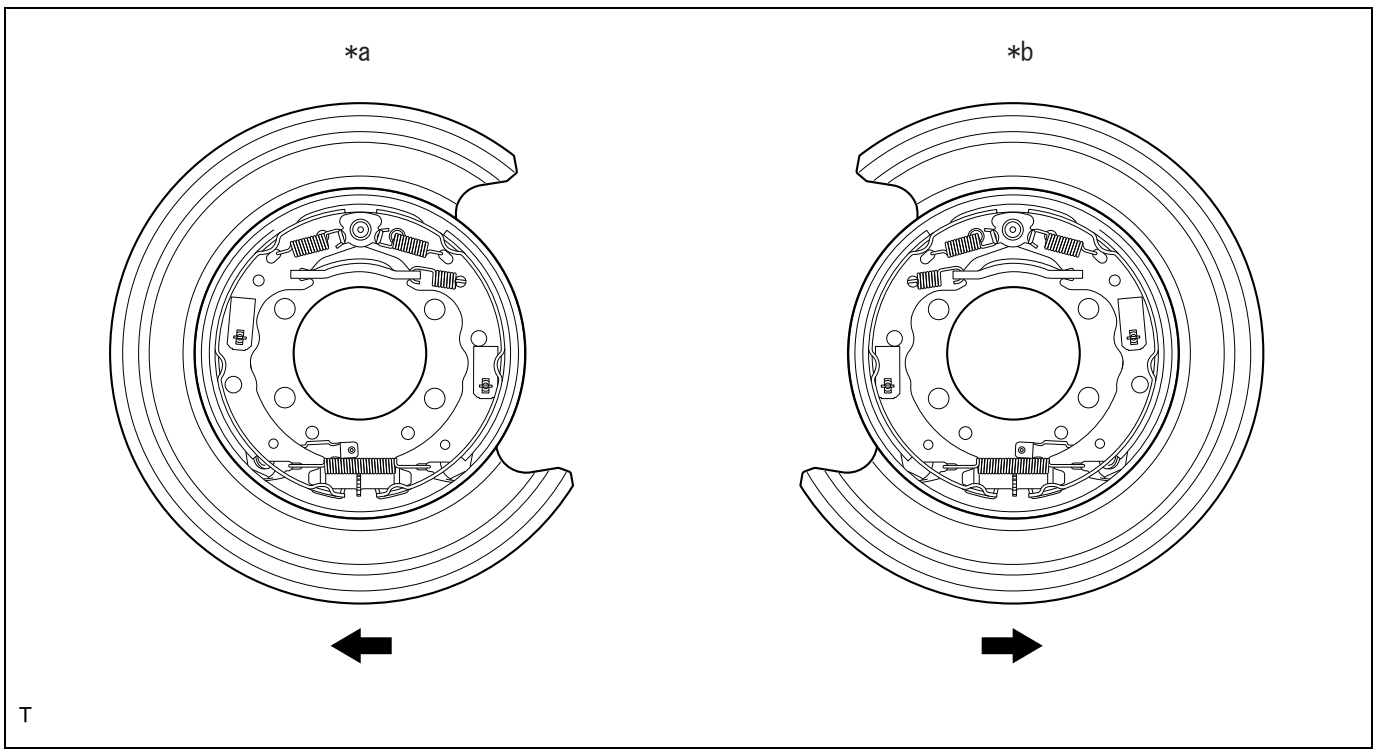

Captions in illustration

*a	LH side	*b	RH side
➡	Front of vehicle	-	-

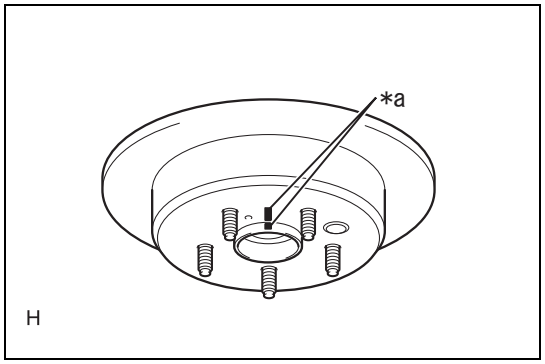

19. Installation of rear disc
    (1) Align the marks on the rear disc and the axle hub, and install the rear disc.

Captions in illustration

*a	Alignment marks

NOTE:
If the rear disc has been replaced with new one, this procedure is not required.

20. Clearance adjustment of disc and lining
    (1) Using a hub nut, secure the rear disc.
    (2) Remove the service hole plug of the rear disc, and turn the rear disc until the service hole is aligned to the adjusting screw.
    (3) Using a flat tip screwdriver, turn the adjusting screw in the extension direction until the parking brake shoe is in close contact with the disc.

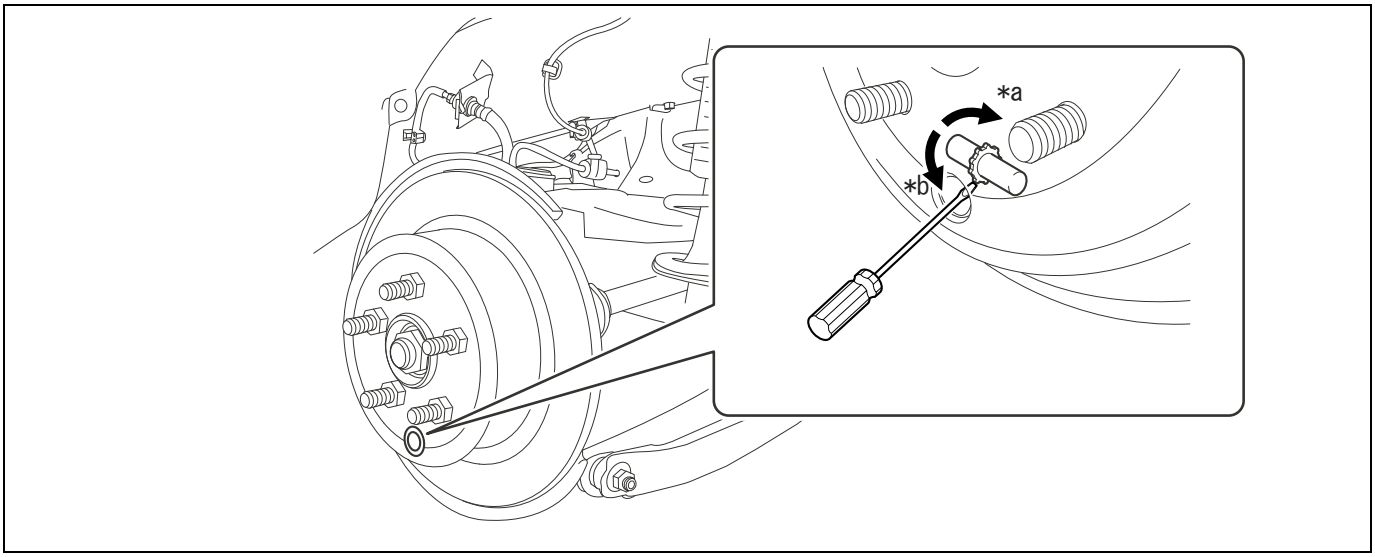

Captions in illustration

*a	Extend	*b	Contract

    (4) Turn the adjusting screw in the contraction direction until the rear disc rotates lightly.
    NOTE:
    Standard number of notches to return: 10
    (5) Check for brake drag.
    (6) Remove the hub nut.

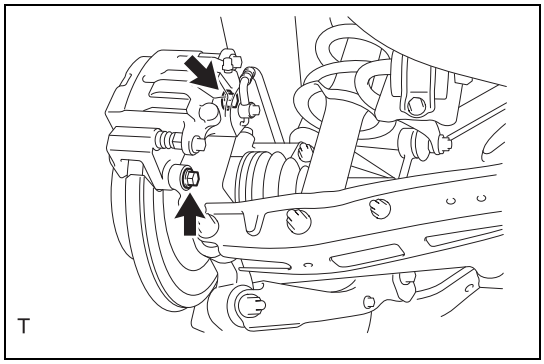

21. Connection of rear disc brake caliper ASSY LH
    (1) Using 2 new bolts, install the rear disc brake caliper ASSY LH.
    Standard value:Width across flat 14 mm {0.55 in}
    T=66N·m {673kgf·cm} {48.7ft·lbf}
    Width across flat 17 mm {0.67 in}
    T=110N·m {1122kgf·cm} {81.1 ft·lbf}
    CAUTION:
    - Do not twist the flexible hose.
    - Make sure that there is no foreign matter or damage on the threaded portion.

22. Connection of rear disc brake caliper ASSY LH (brembo type)
    (1) Using 2 new bolts, install the rear disc brake caliper ASSY LH.
    Standard value:T=73N·m {744kgf·cm} {53.8ft·lbf}
    CAUTION:
    - Do not twist the flexible hose.
    - Make sure that there is no foreign matter or damage on the threaded portion.
23. Parking brake lever stroke check (Refer to PB - 2)
24. Adjustment of parking brake (Refer to PB - 2)
25. Installation of rear tire
    Standard value:T=120N·m {1224kgf·cm} {88.5ft·lbf}

Parking brake switch ASSY

Exploded view

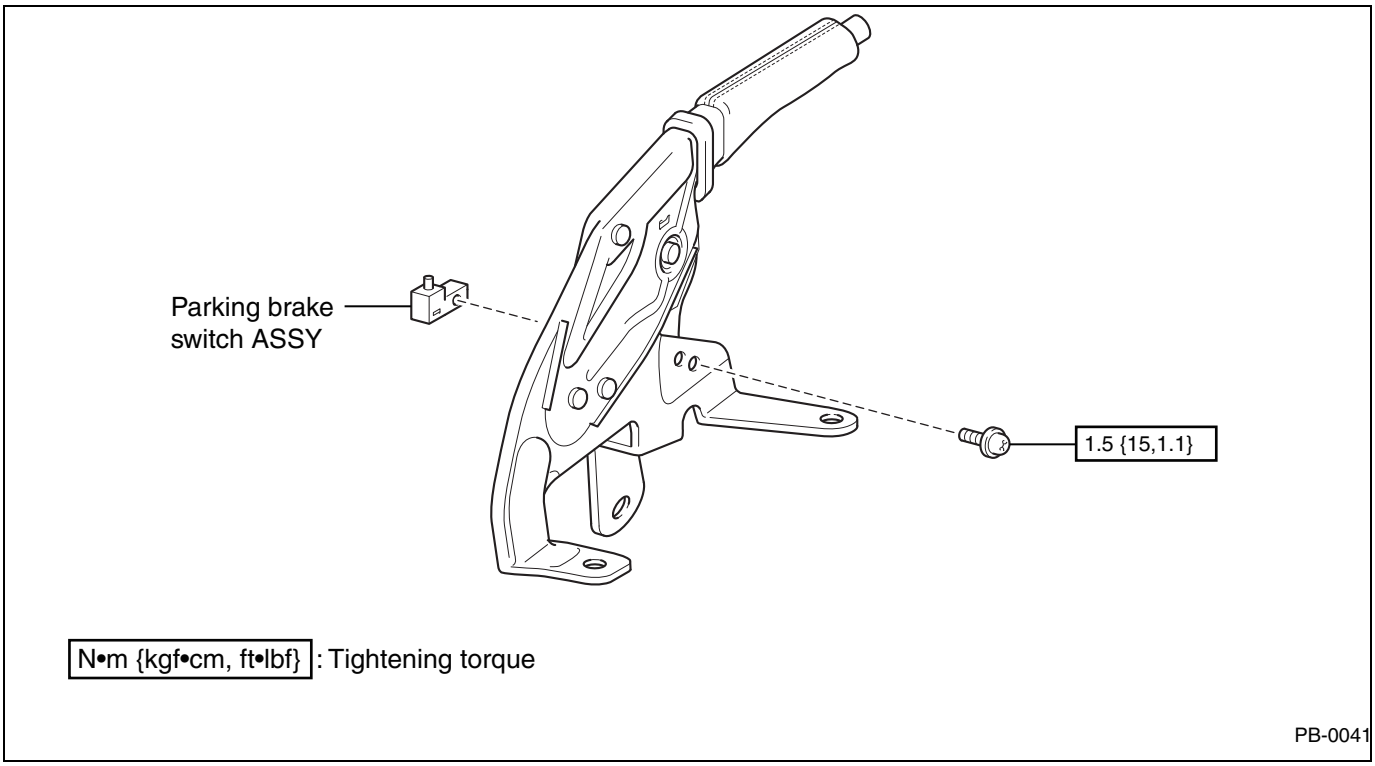

Removal

1. Removal of console box ASSY (Refer to IT - 33)
2. Removal of parking brake switch ASSY
   (1) Disconnect the connector.

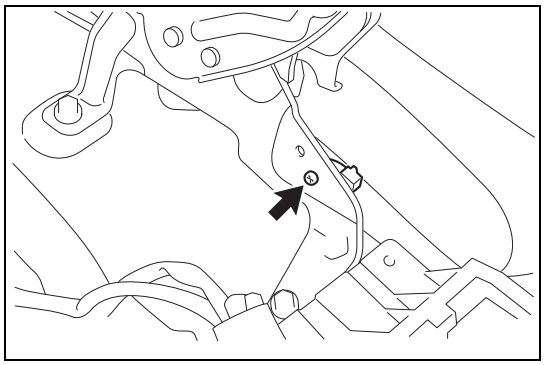

(2) Remove the screw and parking brake switch ASSY from the parking brake lever ASSY.

Installation

1. Installation of parking brake switch ASSY
   (1) Install the parking brake switch ASSY to the parking brake lever ASSY with screw.
   Standard value:T=1.5N·m {15kgf·cm} {1.1 ft·lbf}
   (2) Connect the connector.
2. Installation of console box ASSY (Refer to IT - 38)

Unit inspection

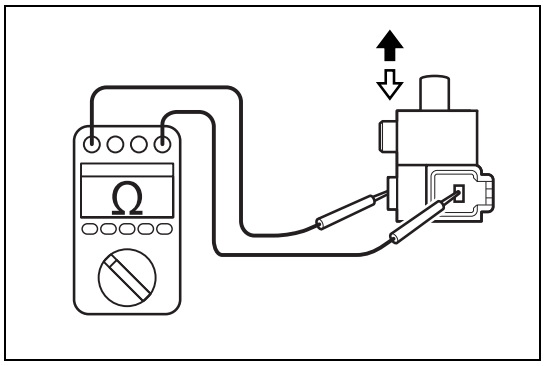

1. Parking brake switch ASSY check
   (1) Measure the resistance between the parking brake switch ASSY and the chassis ground.

Captions in illustration

➡	ON
⇨	OFF

Resistance

Inspection terminals	Inspection conditions	Standard value
1(+) - chassis ground	When shaft is free (ON)	Less than 1 Ω
	When shaft is pressed in (OFF)	10 k Ωor more

Power assisted system

Power steering system

Precautions PA-3
Function inspection PA-3
Parts location PA-5
List of diagnostic codes PA-6
Symptom table PA-7
How to troubleshoot PA-8
Check list for interview PA-10
Checking / clearing diagnostic codes PA-10
Freeze frame data PA-11
Work support PA-12
Circuit figure PA-13
ECM terminal arrangement PA-14
Data monitor PA-15
Failsafe list PA-16
C1511 . . . . . PA-17
C1512 . . . . . PA-17
C1513 . . . . . PA-17
C1514 . . . . . PA-17
C1517 . . . . . PA-17
C1515 . . . . . PA-19
C1525 . . . . . PA-19
C1516 . . . . . PA-21
C1526 . . . . . PA-21
C1521 . . . . . PA-22
C1531 . . . . . PA-22
C1532 . . . . . PA-22
C1533 . . . . . PA-22
C1534 . . . . . PA-22
C1554 . . . . . PA-22
C1522 . . . . . PA-23
C1523 . . . . . PA-23
C1524 . . . . . PA-23
C1555 . . . . . PA-23
C1528 . . . . . PA-25
C1541 . . . . . PA-27
C1551 . . . . . PA-28
C1552 . . . . . PA-30
C1581 . . . . . PA-32
C1582 . . . . . PA-33
C1583 . . . . . PA-34
U0100 . . . . . PA-35
U0122 . . . . . PA-35
U0416 . . . . . PA-35
P / S warning light remains ON PA-35

Power steering computer

Exploded view PA-40
Removal PA-40

Installation PA-41

Power steering system

Precautions

1. Correct handling and precautions for operation
   (1) Handling of electrical parts
      (a) Do not apply any impact to any electrical parts such as the power steering computer ASSY. Be sure to replace with a new part if strong impact is applied (such as hitting or dropping the part).
      (b) Do not expose electric parts to extreme temperatures or high humidity.
      (c) Do not touch the connector terminals as they may become deformed, or damaged due to static electricity discharge.
   (2) Handling of the power steering computer ASSY
      (a) Be sure to use new replacement parts when replacing the power steering computer ASSY.
         CAUTION:
         Do not install any power steering computer ASSY that is designed to be used with other vehicles (such as demonstration models).
      (b) Always perform a steering zero point calibration after replacing the power steering computer ASSY. (Refer to PA - 12)
   (3) Precautions when connecting or disconnecting connectors
      (a) Before you disconnect any connectors related to the power steering system, turn the ignition to IG ON and set the steering to the straight-ahead position. Turn the ignition to IG OFF and disconnect the connector after disconnecting the battery ground terminal.
      (b) Before you connect any connectors related to the power steering system, confirm that the ignition is turned to IG OFF, connect the connector and turn the ignition to IG ON while the steering is in the straight-ahead position.
         CAUTION:
         Do not turn the ignition to IG ON if the steering is not in the straight-ahead position.
      (c) If the above procedures are not carried out, the steering neutral (zero point) position can shift and you may experience a difference in the steering effort required for the left and right directions. Please perform a zero point calibration if you notice any difference in the steering effort for the left and right directions. (Refer to PA - 12)
2. Precautions for CAN communication
   (1) CAN communication is used for sending and receiving information from each computer, sending warning signals to the combination meter ASSY, and communication with the DLC3. A communication error code is output if there is a problem with the CAN communication line.
   (2) If a CAN communication error code is output, repair the malfunction causing the communication line error and perform power steering system troubleshooting under a normal data communication state.
   (3) For precautions when repairing the CAN communication system, please refer to NW - 25.

Function inspection

1. Dry steering torque check
   WARNING:
   As this maintenance procedure may have an effect on the SRS airbag system, be sure to check the SRS airbag system precautions before commencing work. (Refer to RS - 5)
   (1) Park the vehicle on a level paved surface, and set the steering wheel to the straight-ahead position.
   (2) Disconnect the battery ground terminal.
      CAUTION:
      After turning the ignition switch to OFF, you may have to wait for a while before disconnecting the battery terminals. Check appropriate precautions for battery terminal disconnection before proceeding. (Refer to IN - 6)
   (3) Remove the driver's airbag module. (Refer to RS - 246)
   (4) Connect the negative terminal of the battery.
   (5) Check that the steering wheel set nut is not loose.
      Standard value: T=39N·m {398kgf·cm} {28.8ft-lbf}
   (6) Start the engine and place the vehicle in a state where the power steering can operate.
   (7) Check the torque while turning the steering wheel a quarter turn to the right from the straight-ahead position.
      Standard value: T=6.0N·m {61kgf·cm} {4.4 ft-lbf} or less
   (8) Check the torque in the same manner while turning to the left.
   (9) Set the steering wheel to the straight-ahead position.
   (10) Disconnect the battery ground terminal.

CAUTION:
After turning the ignition switch to OFF, you may have to wait for a while before disconnecting the battery terminals. Check appropriate precautions for battery terminal disconnection before proceeding. (Refer to IN - 6)

(11) Install the driver's airbag module. (Refer to RS - 248)

(12) Connect the negative terminal of the battery.

Parts location

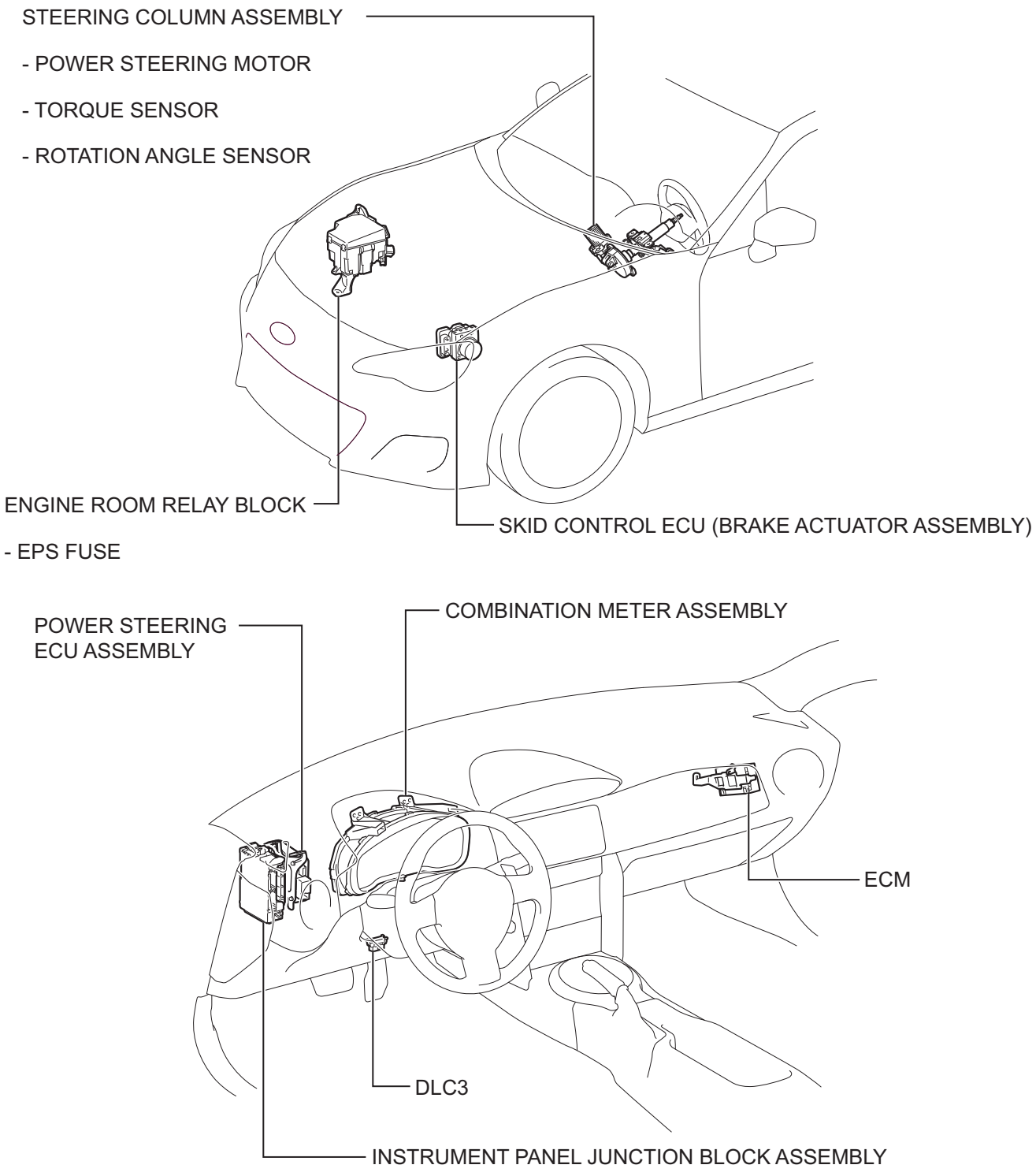

List of diagnostic codes

Power steering system

Diagnostic codes	Diagnostic items	Light on	Normal return condition	Reference pages
C1511	[Torque sensor 1 abnormal]	*1	Once again, IG ON	PA - 17
C1512	[Torque sensor 2 abnormal]	*1	Once again, IG ON	PA - 17
C1513	[Torque sensor 3 abnormal]	*1	Once again, IG ON	PA - 17
C1514	[Torque Sensor Power Supply Failure]	*1	Once again, IG ON	PA - 17
C1515	[Torque Sensor Zero Point Adjustment Undone]	*1	Perform torque sensor zero point calibration	PA - 19
C1516	[Torque Sensor Zero Point Adjustment Incomplete]	*1	Delete diagnosis code	PA - 21
C1517	[Torque sensor hold abnormality]	*1	Once again, IG ON	PA - 17
C1521	[Motor failure 1]	*1	Once again, IG ON	PA - 22
C1522	[Motor failure 2]	*1	Once again, IG ON	PA - 23
C1523	[Motor failure 3]	*1	Once again, IG ON	PA - 23
C1524	[Motor failure 4]	*1	Once again, IG ON	PA - 23
C1525	[Resolver not corrected]	*1	Perform rotation angle sensor output calibration	PA - 19
C1526	[Resolver correction not completed]	*1	Delete diagnosis code	PA - 21
C1528	[Motor rotation angle sensor]	*1	Once again, IG ON	PA - 25
C1531	[ECU Malfunction 1]	*1	Once again, IG ON	PA - 22
C1532	[ECU Malfunction 2]	*1	Once again, IG ON	PA - 22
C1533	[ECU Malfunction 3]	*2	After normal operation is determined	PA - 22
C1534	[ECU Malfunction 4]	*1	Once again, IG ON	PA - 22
C1541	[Vehicle Speed Signal Failure 1]	*1	After normal operation is determined	PA - 27
C1551	[Power Supply Voltage Failure]	*1	After normal operation is determined	PA - 28
C1552	[PIG Power Supply Voltage]	*1	After normal operation is determined	PA - 30
C1554	[Power Supply Relay Failure]	*1	Once again, IG ON	PA - 22
C1555	[Motor Relay Welding Failure]	*1	Once again, IG ON	PA - 23
C1581	[Assist map not written]	*1	After normal operation is determined	PA - 32
C1582	[Assist Map Number Mismatch]	*2	After normal operation is determined	PA - 33
C1583	[Assist MAP Selection Error]	*2	Delete diagnosis code	PA - 34
U0100	[Lost Communication With ECM/PCM "A"]	*1	After normal operation is determined	PA - 35
U0122	[Lost Communication With Vehicle Dynamics Control Module]	*1	After normal operation is determined	PA - 35
U0416	[Invalid Data Received From VDC]	*1	Once again, IG ON	PA - 35

*1: Turns on.

*2: Does not turn on.

Symptom table

Power steering system

Symptoms	Inspection items	Reference pages
Steering operation is heavy	Front tires (improperly inflated, uneven wear)	TW - 2
	Front wheel alignment (improper)	AL - 2
	Front suspension (lower ball joint)	FP - 17
	Steering link ASSY	SL - 10
	Torque sensor (integrated into the steering column ASSY)	-
	Power steering motor (integrated into the steering column ASSY)	-
	Battery and power supply system	-
	Speed sensor system	-
	Skid control computer (brake actuator ASSY)	BC - 9
	Power steering computer ASSY power supply voltage and internal relay	-
	Power steering computer ASSY	PA - 40
	The presence of continued operation under high load or dry steering	-
Steering force required is different in the left and right directions or it is uneven.	Torque sensor zero point calibration or rotation angle sensor output calibration are incomplete.	PA - 12
	Front tires (improperly inflated, uneven wear)	TW - 2
	Front wheel alignment (improper)	AL - 2
	Front suspension (lower ball joint)	FP - 17
	Steering link ASSY	SL - 10
	Torque sensor (integrated into the steering column ASSY)	-
	Steering column ASSY	SR - 54
	Power steering motor (integrated into the steering column ASSY)	-
	Power steering computer ASSY	PA - 40
While driving, steering operation does not change depending on the speed, or the steering wheel does not return smoothly.	Front suspension (lower ball joint)	FP - 17
	Speed sensor system	-
	Skid control computer (brake actuator ASSY)	BC - 9
	Torque sensor (integrated into the steering column ASSY)	-
	Power steering motor (integrated into the steering column ASSY)	-
	Steering link ASSY	SL - 10
	Power steering computer ASSY	PA - 40
	CAN communication system	NW - 30
There is a thumping noise during power steering operation, when the steering wheel returns to the neutral position	Front suspension (lower ball joint)	FP - 17
	Steering intermediate shaft	-
	Steering link ASSY	SL - 10
There is a rubbing sound when the steering wheel is turned during slow driving	Power steering motor (integrated into the steering column ASSY)	-
	Steering link ASSY	SL - 10
	Steering column ASSY	SR - 54
	Steering sensor (spiral cable SUB-ASSY)	-
	Rubbing of the steering wheel ASSY and the column cover	SR - 67
	Power steering computer ASSY	PA - 40
An abnormal high-pitched squeaking sound occurs when the steering wheel is slowly turned when the vehicle is stopped	Steering link ASSY	SL - 10
	Power steering motor (integrated into the steering column ASSY)	-
	Steering wheel installation condition	SR - 69
The steering wheel vibrates (accompanied with a noise) during dry steering	Steering link ASSY	SL - 10
	Power steering motor (integrated into the steering column ASSY)	-
	Steering column ASSY	SR - 54
	Steering wheel installation condition	SR - 69
P/S warning light remains ON	Battery and power supply system	-
	Refer to the flow chart	PA - 35

How to troubleshoot

1	Bring in the car

Next

2	Interview and phenomenon check

Next

3	Battery voltage check

(1) Check for loose battery terminals and damage.
(2) Check the battery voltage.
(3) Refer to parts location drawings and circuit figures and inspect any parts that can be checked visually such as blown fuses in the system, wiring harness open circuit, short circuits, or poor connector contacts.
NOTE:
If the battery voltage is less than 11 V, please recharge or replace the battery before commencing the diagnostic procedure.
(4) Use the SSM4 to check the [Battery Voltage Lo Record]. (Refer to PA - 15)

Next

4	Check of diagnosis codes and freeze frame data

(1) Check of diagnosis codes and freeze frame data
(a) Record diagnosis codes and freeze frame data. (Refer to PA - 10)
(2) Deletion of diagnosis codes and freeze frame data (Refer to PA - 10)
(3) Diagnosis codes recheck (Refer to PA - 10)
(a) Based on the recorded diagnosis codes and freeze frame data, recreate the trouble phenomenon and recheck for the presence of the diagnosis code output.
NOTE:
- If an error code for CAN communication system is output, first troubleshoot CAN communication and repair it. (Refer to NW - 30)
- If communication with the power steering computer ASSY cannot be established by the SSM4, check the CAN communication between the DLC3 and the power steering computer ASSY, as well as the power steering computer ASSY IG circuit.

Result

Result	Go to
Diagnosis code normal	A
Error code output	B
Diagnosis code normal, unable to check or recreate the phenomenon	C

B → Refer to "List of diagnostic codes (PA - 6)" and perform troubleshooting for each code. Then go to step 7.

C → Go to "Malfunction simulation (IN - 32)".

A

5	Symptom table (Refer to PA - 7)

Result

Result	Go to
Not applicable to the symptom table.	A
Applicable to the symptom table.	B

B → Perform troubleshooting for each applicable symptom and progress to step 7.

A

6	Based on the trouble phenomenon, use the following methods to perform troubleshooting

(1) Data monitor (Refer to PA - 15)
(2) ECM terminal arrangement (Refer to PA - 14)

Next

7	Adjustment, repair, or replacement

Next

8	Confirmation test

Next

Complete

Check list for interview

Power Steering System Check Sheet

Inspector: Inspection date: /

Name		Registration No.	
		First registration Year Month	Year Month
Vehicle model		Frame No.	
Year/month/date of vehicle bring-in	Month Date (Day)	Odometer reading	

Date when trouble occurred	Month Date (Engine: ☐ Cold ☐ Warm)
Frequency of occurrence	☐ Continuous ☐ Intermittent (times/day)

Trouble symptom	☐ Steering effort is heavy.
	☐ Steering effort is different between left and right. Steering effort is not even.
	☐ Steering effort does not change in response to vehicle speed during driving.
	☐ Steering return is not normal.
	☐ Vibration and noise appear while steering.
	☐ Condition of trouble occurrence (☐ Steering in halfway range ☐ Dry steering ☐ Always)
	☐
	☐
	☐ Others ( )

Condition of P/S warning light	☐ Lit ( )	☐ Does not lit

DTC check	1st	☐ Normal ~~cod~~e	☐ Abnormal code
	2nd	☐ Normal code	☐ Abnorma~~l~~ code
* If abnormal code appears at 1st time, record freeze frame data.			
Freeze frame data			

PS-01586

PA

Checking / clearing diagnostic codes

1. Reading the diagnosis codes
   (1) Turn the ignition switch to OFF.

(2) Connect the SSM4 to the DLC3 connector.
(3) Turn the ignition switch to ON.
(4) Follow the SSM4 display screen to read the diagnosis codes.
CAUTION:
If an error is detected, recheck diagnosis codes after the issue is resolved and confirm that no error code is output.

2. Deletion of recorded diagnosis codes
(1) Turn the ignition switch to OFF.
(2) Connect the SSM4 to the DLC3.
(3) Turn the ignition switch to ON.
(4) Follow the SSM4 display screen to delete the diagnosis codes.

Freeze frame data

1. Freeze frame data
NOTE:
- If an error diagnosis code is output, the freeze frame data at the time of the generation of the error code is recorded.
- When an error diagnosis code is generated and the freeze frame data is recorded, data is not updated or deleted until the recorded data itself is deleted (diagnosis code deletion).

(1) Turn the ignition switch to OFF.
(2) Connect the SSM4 to the DLC3.
(3) Display the error code on the diagnostic code confirmation screen. (Refer to PA - 10)
(4) Check the freeze frame data.

List of freeze frame data

Item name	Description/display range	Normal value	Remarks
Vehicle speed	Indicates the vehicle speed input from the skid control computer. Display range: 0.0 to 300.0km/h	0km/h: When stopped	-
		No significant fluctuation: When driving at a constant speed	-
Engine speed	Indicates the engine speed. Display range: 0 to 12800rpm	No substantial fluctuations present: Engine speed is constant	-
Motor current	Indicates the current flowing to the motor. Display range: -327.68 to 327.67A	Changes in proportion to the steering force: During engine start, steering operation	Left turn (+) Right turn (-)
Motor current (requirement)	Indicates the requirement for the current flowing to the motor. Display range: -327.68 to 327.67A	Changes in proportion to the steering force: During engine start, steering operation	Left turn (+) Right turn (-)
Steering angular speed	Indicates the angular speed of steering operation. Display range: -32768 to 32767deg/s	Changes in proportion to the steering speed: During engine start, steering operation	Left turn (+) Right turn (-)
Thermistor temperature	Indicates the ECM board temperature. Display range: -50.0 to 150.0°C	-	-
PIG power supply voltage	Indicates the power supply voltage to drive the motor. Display range: 0.0000 to 20.1531V	9 to 16V: Always	-
IG power supply voltage	Indicates the ECM power supply state. Display range: 0.0000 to 20.1531V	9 to 16V: IG ON	-
Steering torque	Indicates the steering torque. Display range: -7.00 to 7.00Nm	Changes in proportion to the steering force: During engine start, steering operation	Left turn (+) Right turn (-)
Motor rotation angle	Indicates the motor rotation angle. Display range: 0.000 to 360.000deg	Varies between 0 and 360 deg: During engine start, steering operation	-
Motor current (Command Value 2)	Indicates the requirement for the current flowing to the motor. Display range: -327.68 to 327.67A	Changes in proportion to the steering force: During engine start, steering operation	-
Boost voltage after the coil.	Indicates the boost voltage after the coil. Display range: 0.000 to 98.000V	Approx. 27V: During engine start, steering non-operation	-
		Varies within 16 - 35 V: During engine start, steering operation	-
Motor power supply voltage	Indicates the motor power supply voltage. Display range: 0.000 to 98.000V	Approx. 27 V: During engine start, steering non-operation	-
		Varies within 4 - 35 V: During engine start, steering operation	-

Item name	Description/display range	Normal value	Remarks
Motor terminal voltage (U phase)	Indicates the motor U terminal voltage. Display range: 0.000 to 98.000V	Varies within 4 - 35 V: During engine start, steering operation	-
Motor terminal voltage (V phase)	Indicates the motor V terminal voltage. Display range: 0.000 to 98.000V	Varies within 4 - 35 V: During engine start, steering operation	-
Motor terminal voltage (W phase)	Indicates the motor W terminal voltage. Display range: 0.000 to 98.000V	Varies within 4 - 35 V: During engine start, steering operation	-
Torque sensor 1 output	Indicates the torque sensor 1 output. Display range: 0.0000 to 5.0000V	2.3 to 2.7V: During engine start, no steering load (neutral position)	-
		2.3 to 3.8V: During engine start, steering to the right	-
		1.2 to 2.7V: During engine start, steering to the left	-
Torque sensor 2 output	Indicates the torque sensor 2 output. Display range: 0.0000 to 5.0000V	2.3 to 2.7V: During engine start, no steering load (neutral position)	-
		1.2 to 2.7V: During engine start, steering to the right	-
		2.3 to 3.8V: During engine start, steering to the left	-
Torque sensor 1 (zero point value)	Indicates the torque sensor 1 output value at the zero point. Display range: 0.0000 to 5.0000V	-	-
Torque sensor 2 (zero point value)	Indicates the torque sensor 2 output value at the zero point. Display range: 0.0000 to 5.0000V	-	-

Work support

1. Steering zero point calibration

   CAUTION:

   - Always perform a steering zero point calibration after replacing the steering column ASSY or power steering computer ASSY, or when there is a difference between the right and left steering force.
   - When C1516 (torque sensor zero point calibration not finished) is recorded, please delete the diagnosis code as torque sensor zero point calibration is unable to be performed in this case. (Refer to PA - 10)
   - When C1526 (Resolver calibration not finished) is recorded, please delete the diagnosis code as rotation angle sensor output calibration is unable to be performed in this case. (Refer to PA - 10)

   NOTE:

   For steering zero point calibration, delete the sensor calibration value and perform torque sensor zero point calibration and rotation angle sensor output calibration.

   (1) Items to be checked before calibration.

   (a) Use the SSM4 to check the [Ignition Power Supply Voltage] with the [Data monitor]. (Refer to PA - 15)

   Voltage: 10 V or more

   CAUTION:

   As calibration cannot be performed if the IG power supply voltage is less than 9 V, please recharge or replace the battery before commencing calibration if this value is not within the specified range.

   (2) Steering zero point calibration

   (a) Set the steering and front tires to the straight-ahead position.

   (b) Connect the SSM4 to the DLC3.

   (c) Turn the ignition switch to ON.

   (d) Select [Work Support] →[Steering sensor revision] on the SSM4 display screen.

   (e) Follow the SSM4 display screen to carry out the steering 0 point adjustment.

   CAUTION:

   - Do not touch the steering during the torque sensor zero point calibration.
   - Do not do any fast steering operation during the rotation angle sensor output calibration.

   (f) Check the diagnosis codes. (Refer to PA - 10)

   CAUTION:

   - When performing steering zero point calibration, please confirm that the diagnosis codes are normal after the procedure is complete.
   - If C1515, C1516, C1525, C1526, or C1534 are output, follow the procedure to perform troubleshooting for each diagnosis code. (Refer to PA - 6)

2. Operations related to assist map

   (1) Confirmation of assist map

   (a) Connect the SSM4 to the DLC3.

(b)Turn the ignition switch to ON.
(c)Select [Work Support] →[related Assist Map Selection] →[Assist Map Confirmation] on the SSM4 display screen.

(2) Removal of assist map
(a)Connect the SSM4 to the DLC3.
(b)Turn the ignition switch to ON.
(c)Select [Work Support] →[related Assist Map Selection] →[Assist Map Clear] on the SSM4 display screen.

Circuit figure

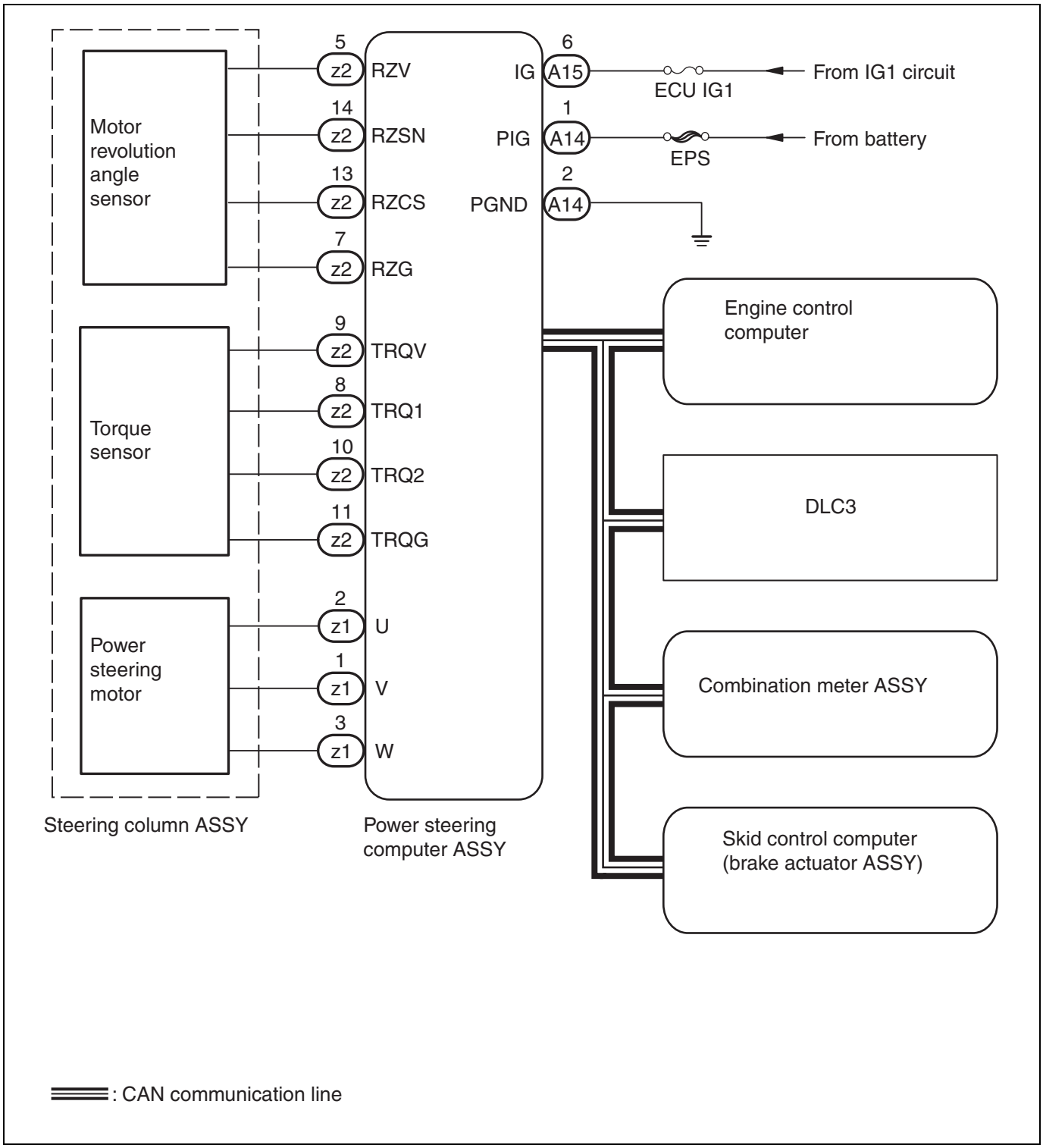

PA

ECM terminal arrangement

1. Inspection of the power steering computer ASSY
   (1) Check the voltage or resistance between each terminal, as well as between the chassis ground and each terminal.
   CAUTION:
   This check is performed from the back side of the connector, with the connector hooked up to the computer.

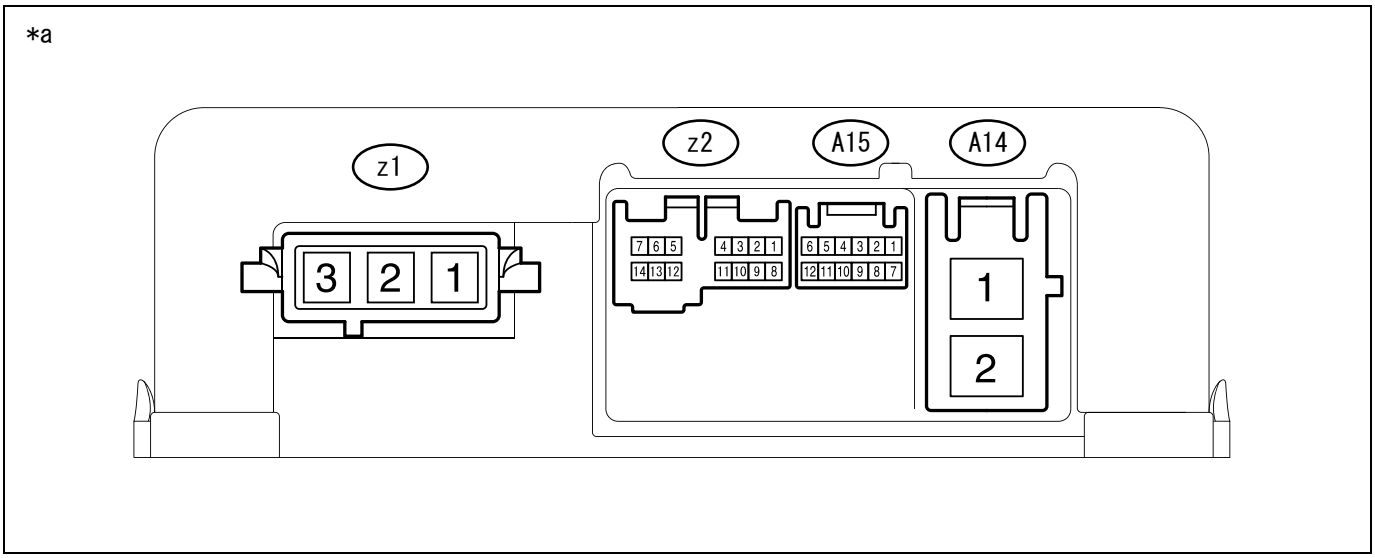

Captions in illustration

*a	Connector not connected (Power steering computer ASSY)	-	-

Criteria

Terminal No. (Symbol)	Terminal description	Condition	Special conditions
z1-1 (V) [*]	V phase motor output	-	-
z1-2 (U) [*]	U phase motor output	-	-
z1-3 (W) [*]	W phase motor output	-	-
A14-1 (PIG) - A14-2 (PGND)	Motor power supply	Always	9 to 16 V
A14-2 (PGND) - Chassis ground	Power supply ground	Always	1 Ωor less
A15-6 (IG) - A14-2 (PGND)	IG power supply	IG SW ON	9 to 16 V
z2-5 (RZV) - A14-2 (PGND)	Rotation angle sensor excitation output signal	During engine start, steering operation	0.68 to 4.42 V
z2-7 (RZG) - A14-2 (PGND)	Rotation angle sensor excitation circuit GND	Always	1 Ωor less
z2-13 (RZCS) - A14-2 (PGND)	Rotation angle sensor COS phase input signal	During engine start, steering operation	0.68 to 4.42 V
z2-14 (RZSN) - A14-2 (PGND)	Rotation angle sensor SIN phase input signal	During engine start, steering operation	0.68 to 4.42 V
z2-8(TRQ1) - z2-11(TRQG)	Torque sensor signal 1	During engine start, no steering load (neutral position)	2.3 to 2.7 V
		During engine start, steering to the right (When the vehicle is stopped)	2.3 to 3.8 V
		During engine start, steering to the left (When the vehicle is stopped)	1.2 to 2.7 V
z2-9(TRQV) - z2-11(TRQG)	Torque sensor power supply	IG SW ON	4.5 to 5.5 V
z2-10(TRQ2) - z2-11(TRQG)	Torque sensor signal 2	During engine start, no steering load (neutral position)	2.3 to 2.7 V
		During engine start, steering to the right (When the vehicle is stopped)	1.2 to 2.7 V
		During engine start, steering to the left (When the vehicle is stopped)	2.3 to 3.8 V
z2-11(TRQG) - Chassis ground	Torque sensor ground	Always	1 Ωor less

*: As connector z1 is equipped with a lock lever, it is not possible to check each terminal while the connector is hooked up to the power steering computer ASSY.

Data monitor

1. Data monitor list
   (1) Turn the ignition switch to OFF.
   (2) Connect the SSM4 to the DLC3.
   (3) Turn the ignition to IG ON and select [Data monitor] on the SSM4 display screen to check the data monitor.

SSM4 screen: [Power Steering] →[Select Function] →[Data monitor]

Item name	Description/display range	Normal value	Remarks
[Vehicle Speed]	Indicates the vehicle speed input from the skid control computer. Display range: 0.0 to 300.0km/h	0km/h: When stopped	-
		No substantial fluctuations present: When cruising	-
[Engine Speed]	Indicates the engine speed. Display range: 0 to 12800rpm	No substantial fluctuations present: Engine speed is constant	-
[Motor Current]	Indicates the current flowing to the motor. Display range: -327.68 to 327.67A	Changes in proportion to the steering force: During engine start, steering operation	Left turn (+) Right turn (-)
[Command Value Current]	Indicates the requirement for the current flowing to the motor. Display range: -327.68 to 327.67A	Changes in proportion to the steering force: During engine start, steering operation	Left turn (+) Right turn (-)
[Steering Angle Velocity]	Indicates the angular speed of steering operation. Display range: -32768 to 32767deg/s	Changes in proportion to the steering speed: During engine start, steering operation	Left turn (+) Right turn (-)
[Thermistor Temperature]	Indicates the ECM board temperature. Display range: -50.0 to 150.0°C	-	-
[PIG-Power Source Volt]	Indicates the power supply voltage to drive the motor. Display range: 0.0000 to 20.1531V	9 to 16V: Always	-
[Ignition Power Supply Voltage]	Indicates the ECM power supply state. Display range: 0.0000 to 20.1531V	9 to 16V: IG ON	-
[Steering Wheel Torque]	Indicates the steering torque. Display range: -7.00 to 7.00Nm	Changes in proportion to the steering force: During engine start, steering operation	Left turn (+) Right turn (-)
[Motor Rotation Angle]	Indicates the motor rotation angle. Display range: 0.000 to 360.000deg	Varies between 0 and 360 deg: During engine start, steering operation	-
[Motor voltage (Command Value 2)]	Indicates the requirement for the current flowing to the motor. Display range: -327.68 to 327.67A	Changes in proportion to the steering force: During engine start, steering operation	-
[PIG2 Voltage]	Indicates the boost voltage after the coil. Display range: 0.000 to 98.000V	Approx. 27 V: During engine start, steering non-operation	-
		Varies within 16 - 35 V: During engine start, steering operation	-
[Motor Voltage]	Indicates the motor power supply voltage. Display range: 0.000 to 98.000V	Approx. 27 V: During engine start, steering non-operation	-
		Varies within 4 - 35 V: During engine start, steering operation	-
[Motor Terminal Volt(U)]	Indicates the motor U terminal voltage. Display range: 0.000 to 98.000V	Varies within 4 - 35 V: During engine start, steering operation	-
[Motor Terminal Volt(V)]	Indicates the motor V terminal voltage. Display range: 0.000 to 98.000V	Varies within 4 - 35 V: During engine start, steering operation	-
[Motor Terminal Volt(W)]	Indicates the motor W terminal voltage. Display range: 0.000 to 98.000V	Varies within 4 - 35 V: During engine start, steering operation	-
[Torque Sensor 1 Output]	Indicates the torque sensor 1 output. Display range: 0.0000 to 5.0000V	2.3 to 2.7V: During engine start, no steering load (neutral position)	-
		2.3 to 3.8V: During engine start, steering to the right	-
		1.2 to 2.7V: During engine start, steering to the left	-
[Torque Sensor 2 Output]	Indicates the torque sensor 2 output. Display range: 0.0000 to 5.0000V	2.3 to 2.7V: During engine start, no steering load (neutral position)	-
		1.2 to 2.7V: During engine start, steering to the right	-
		2.3 to 3.8V: During engine start, steering to the left	-
[TRQ1 Zero Point Value]	Indicates the torque sensor 1 output value at the zero point. Display range: 0.0000 to 5.0000V	-	-

Item name	Description/display range	Normal value	Remarks
[TRQ2 Zero Point Value]	Indicates the torque sensor 2 output value at the zero point. Display range: 0.0000 to 5.0000V	-	-
[IG ON/OFF Times]	Indicates the number of times the ignition is turned to IG ON after the diagnosis code is detected. Display range: 0 to 65535	-	-
[Heating prevention control history]	Indicates the presence of an overheat protection control history. Display contents: No/Yes	-	-
[Motor Lo Power Record]	Indicates the presence of a PIG power supply voltage drop history. Display contents: No/Yes	-	-
[Engine speed (RDY) signal loss history]	Indicates the presence of an engine speed signal interruption history. Display contents: No/Yes	-	-
[Spd Sig Invalid Record]	Indicates the presence of a vehicle speed signal unavailability history. Display contents: No/Yes	-	-
[Battery Voltage Lo Record]	Indicates the number of battery voltage drop instances. Display contents: 0 - 65535 times	-	-
[Confirmation of resolver correction completion]	Indicates the resolver calibration completion state. Display contents: Calibration completed/Calibration not completed	-	-
[Confirmation of torque 0 point correction completion]	Indicates the torque zero point calibration completion state. Display contents: Calibration completed/Calibration not completed	-	-
[Number of Diagnostic Code(s):]	Indicates the number of stored diagnosis codes. Display range: 0 to 255	-	-

Failsafe list

1. Failsafe list
   (1) When the power steering computer ASSY detects a malfunction, to protect the system it suspends power assist or continues to perform control under special conditions.

Malfunction type	Fail safe
• Torque sensor malfunction • Motor rotation angle sensor malfunction • Power steering motor malfunction • Power steering computer ASSY malfunction (other than the temperature sensor system)	Power assist is suspended.
Power steering computer ASSY malfunction (temperature sensor system)	• System overheat protection control is switched to a specification that doesn't use a board temperature sensor, and control is continued. • Control is performed under a limited power assist level.
EEPROM error	Control is performed under the default map.
• CAN Communication Error • Speed sensor system malfunction • Skid control computer (brake actuator ASSY) communication malfunction	It is fixed to the same characteristics as when travelling at 100 km/h, and power steering control is continued.
When ECM internal temperature is high (not a malfunction)	The power assist level is limited, or assist is temporarily suspended.
Power supply voltage drop (not a malfunction)	The power assist level is limited, or assist is temporarily suspended.

NOTE:

- If there is repeated steering wheel operation when the vehicle is stopped or driving slowly, or the steering wheel is kept at its turning angle limit for a long period of time, the power assist level may be reduced in order to prevent the motor or computer from overheating. In this case, the system will return to normal if there is no steering wheel operation for approximately 10 minutes with the engine at idle speed.
- If the battery is not sufficiently charged or there is a temporary drop in voltage, the power assist level may be reduced and the P/S warning light may be turned on. In this case, it will return to a normal state when the battery voltage recovers.
- If the ignition switch is accidentally turned OFF during driving, the power assist level is gradually reduced and then the assist is suspended. This is not a malfunction.

DTC	C1511	Torque sensor 1 abnormal
DTC	C1512	Torque sensor 2 abnormal
DTC	C1513	Torque sensor 3 abnormal
DTC	C1514	Torque Sensor Power Supply Failure
DTC	C1517	Torque sensor hold abnormality

Description of functions

The power steering computer ASSY uses the input signal received from the torque sensor to detect the steering force. As part of the fail safe function, power assist is suspended when a torque sensor system malfunction is detected.

DTC No.	Detected item	Inspection parts
C1511	Torque sensor (TRQ1) signal malfunction, or interruption	• Torque sensor (integrated into the steering column ASSY) • Power steering computer ASSY
C1512	Torque sensor (TRQ2) signal malfunction, or interruption	
C1513	When the deviation of torque sensors TRQ1 and TRQ2 falls outside the specified value	
C1514	Torque sensor power supply voltage malfunction	
C1517	Provisional control continues for a long period of time due to a torque sensor system malfunction	

Circuit figure

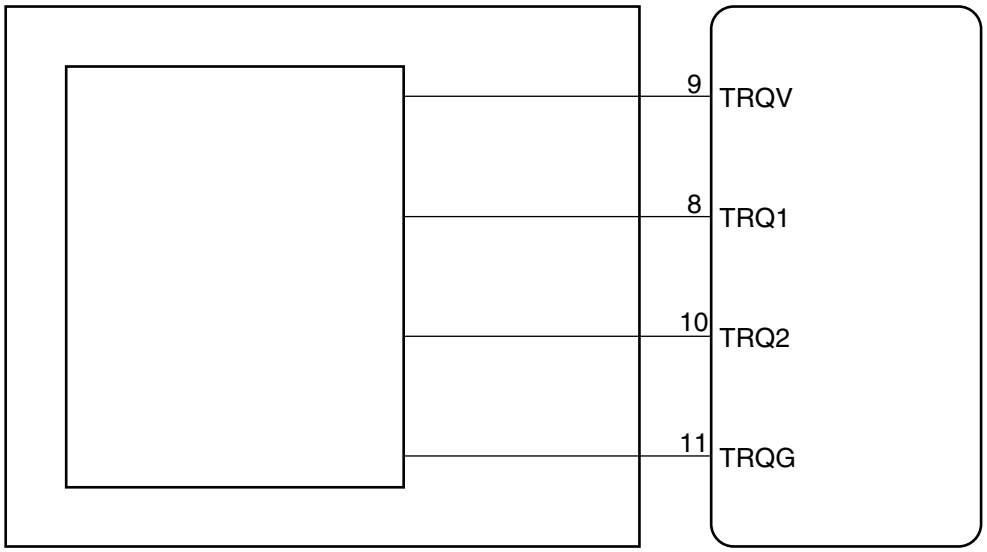

Inspection steps

CAUTION:

Always perform a steering zero point calibration after replacing the steering column ASSY or power steering computer ASSY. (Refer to PA - 12)

1	Connector connection check

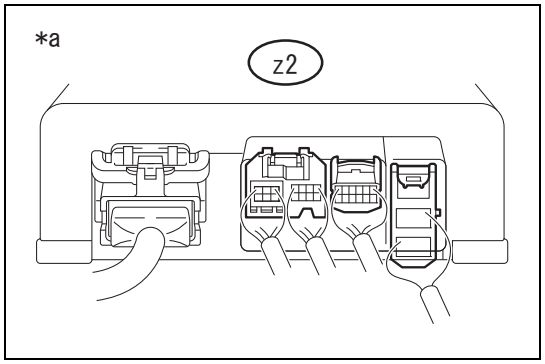

(1) Check the connection state of torque sensor connector z2.

Criteria: The torque sensor connector is properly connected to the power steering computer ASSY.

Captions in illustration

*a	Connector connected (Power steering computer ASSY)

NG → Connect it securely.

OK

2	Inspection of the power steering computer ASSY (torque sensor power supply voltage)

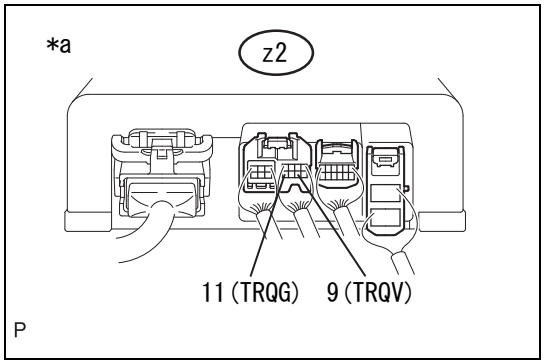

(1) Measure the voltage between each terminal.

Voltage

Inspection terminals	Inspection conditions	Standard value
z2-9(TRQV) - z2-11(TRQG)	IG ON	4.5 to 5.5V

Captions in illustration

*a	Connector connected (Power steering computer ASSY)

NOTE:

Please write down the measured value if the result is OK.

NG → Replacement of the power steering computer ASSY (Refer to PA - 40)

OK

3	Inspection of the steering column ASSY (torque sensor)

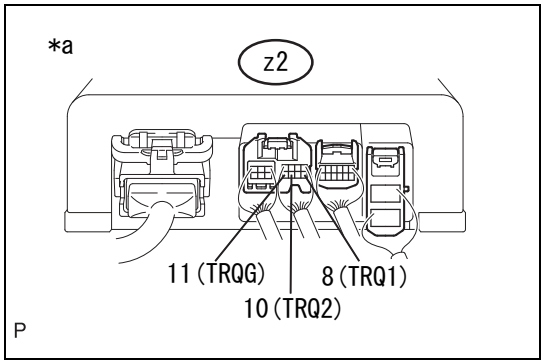

(1) Measure the voltage between each terminal for each measurement condition.

Voltage

Inspection terminals	Inspection conditions	Standard value
z2-8(TRQ1) - z2-11(TRQG)	During engine start, steering neutral position (when under no load)	2.3 to 2.7V
	During engine start, when steering to the right	2.3 to 3.8V
	During engine start, when steering to the left	1.2 to 2.7V
z2-10(TRQ2) - z2-11(TRQG)	During engine start, steering neutral position (when under no load)	2.3 to 2.7V
	During engine start, when steering to the right	1.2 to 2.7V
	During engine start, when steering to the left	2.3 to 3.8V

Captions in illustration

*a	Connector connected (Power steering computer ASSY)

(2) Calculate the difference in between the TRQV measured value written down in the previous step, and the sum of the torque sensor 1 (TRQ1) and torque sensor 2 (TRQ2) output values.
Standard value: 0.3 V or less (absolute value)

NG → Replacement of the steering column ASSY (Refer to SR - 54)

OK

Replacement of the power steering computer ASSY (Refer to PA - 40)

DTC	C1515	Torque Sensor Zero Point Adjustment Undone

DTC	C1525	Resolver not corrected

Description of functions

After replacement of the steering column ASSY or power steering computer ASSY, a diagnosis code is output (when the power steering computer ASSY determines that torque sensor zero point calibration or rotation angle sensor output calibration have not been performed).

Calibration cannot be performed when the IG voltage is less than 9V.

DTC No.	Detecting conditions	Action item
C1515	Torque sensor zero point calibration not performed	Perform torque sensor zero point calibration. Operation is normal if a diagnosis code is not output.
C1525	Rotation angle sensor output calibration not performed	Perform rotation angle sensor output calibration. Operation is normal if a diagnosis code is not output.

Inspection steps
CAUTION:
Always perform a steering zero point calibration after replacing the steering column ASSY or power steering computer ASSY. (Refer to PA - 12)

1	Diagnosis code check

(1) Use the SSM4 to perform steering 0 point adjustment. (Refer to PA - 12) *1
(2) Use the SSM4 to recheck the diagnosis codes. (Refer to PA - 10) *2
NOTE:
If an error code is output, repeat the procedures (*1 and *2) three times.

Result

Result	Go to
An error code is output, even if steering zero point calibration is performed three times.	A
No diagnosis code is output.	B

B → No malfunction (Returns to normal operation after calibration is complete)

A

2	Replacement of the power steering computer ASSY

(1) Replace the power steering computer ASSY. (Refer to PA - 40)

Next

3	Diagnosis code check

(1) Use the SSM4 to perform steering 0 point adjustment. (Refer to PA - 12) *1
(2) Use the SSM4 to recheck the diagnosis codes. (Refer to PA - 10) *2
NOTE:
If an error code is output, repeat the procedures (*1 and *2) three times.

Result

Result	Go to
An error code is output, even if steering zero point calibration is performed three times.	A
No diagnosis code is output.	B

B → Completed

A

Replacement of the steering column ASSY (Refer to SR - 54)

DTC	C1516	Torque sensor zero point adjustment incomplete

DTC	C1526	Resolver correction not completed

Description of functions

A diagnosis code is output if the power steering computer ASSY determines that torque sensor zero point calibration or rotation angle sensor output calibration have not been completed.

DTC No.	Detecting conditions	Action item
C1516	The torque sensor zero point calibration was not correctly completed due to a problem such as touching the steering mechanism.	Delete the diagnosis code, delete the sensor calibration value, and then perform torque sensor zero point calibration. Operation is normal if a diagnosis code is not output.
C1526	The rotation angle sensor output calibration was not correctly completed.	Delete the diagnosis code, delete the sensor calibration value, and then perform rotation angle sensor output calibration. Operation is normal if a diagnosis code is not output.

Inspection steps

CAUTION:

Always perform a steering zero point calibration after replacing the steering column ASSY or power steering computer ASSY. (Refer to PA - 12)

1	Diagnosis code check

(1) Using SSM4, clear the diagnostic code. (Refer to PA - 10) *1
(2) Use the SSM4 to perform steering 0 point adjustment. (Refer to PA - 12) *2
(3) Use the SSM4 to recheck the diagnosis codes. (Refer to PA - 10) *3
NOTE:
If an error code is output, repeat the procedures (*1 - *3) three times.

Result

Result	Go to
An error code is output, even if steering zero point calibration is performed three times.	A
No diagnosis code is output.	B

B → No malfunction (Returns to normal operation after calibration is complete)

A

2	Replacement of the power steering computer ASSY

(1) Replace the power steering computer ASSY. (Refer to PA - 40)

Next

3	Diagnosis code check

(1) Using SSM4, clear the diagnostic code. (Refer to PA - 10) *1
(2) Use the SSM4 to perform steering 0 point adjustment. (Refer to PA - 12) *2
(3) Use the SSM4 to recheck the diagnosis codes. (Refer to PA - 10) *3

NOTE:
If an error code is output, repeat the procedures (*1 - *3) three times.

Result

Result	Go to
An error code is output, even if steering zero point calibration is performed three times.	A
No diagnosis code is output.	B

B → Completed

A

Replacement of the steering column ASSY (Refer to SR - 54)

DTC	C1521	Motor failure 1
DTC	C1531	ECM Malfunction 1
DTC	C1532	ECM Malfunction 2
DTC	C1533	ECM Malfunction 3
DTC	C1534	ECM Malfunction 4
DTC	C1554	Power Supply Relay Failure

Description of functions
As part of the fail safe function, power assist is suspended while an ECM system error diagnosis code is being output. However, if only C1533, or C1534 are output, rather than suspending power assist, control is continued with a limited assist level.

DTC No.	Detected item	Inspection parts
C1521	Motor overcurrent malfunction	Power steering computer ASSY
C1531	ECM internal (microcomputer) malfunction	
C1532	ECM internal (circuit) malfunction	
C1533	ECM internal (temperature sensor) malfunction	
C1534	ECM internal (EEPROM) malfunction	
C1554	Power supply relay (integrated in ECM) malfunction	

Inspection steps
CAUTION:
Always perform a steering zero point calibration after replacing the power steering computer ASSY. (Refer to PA - 12)

1	Diagnosis codes recheck

(1) Use the SSM4 to recheck the diagnosis codes. (Refer to PA - 10)

Result

Result	Go to
Diagnosis codes other than C1521, C1531, C1532, C1533, C1534, or C1554 are not output.	A
Diagnosis codes other than C1521, C1531, C1532, C1533, C1534, or C1554 are output.	B

B → Progress to the "output code flow chart". (Refer to PA - 6)

A

Replacement of the power steering computer ASSY (Refer to PA - 40)

DTC	C1522	Motor failure 2

DTC	C1523	Motor failure 3

DTC	C1524	Motor failure 4

DTC	C1555	Motor relay abnormal

Description of functions

As part of the fail safe function, power assist is suspended or limited when a motor error diagnosis code is being output.

DTC No.	Detected item	Inspection parts
C1522	Power supply current sensor malfunction	• Power steering motor (integrated into the steering column ASSY) • Power steering computer ASSY
C1523	Excessive motor current deviation (difference between the command and feedback values)	
C1524	Voltage malfunction or open circuit between motor terminals	
C1555	Motor relay (integrated in ECM) malfunction	

Circuit figure

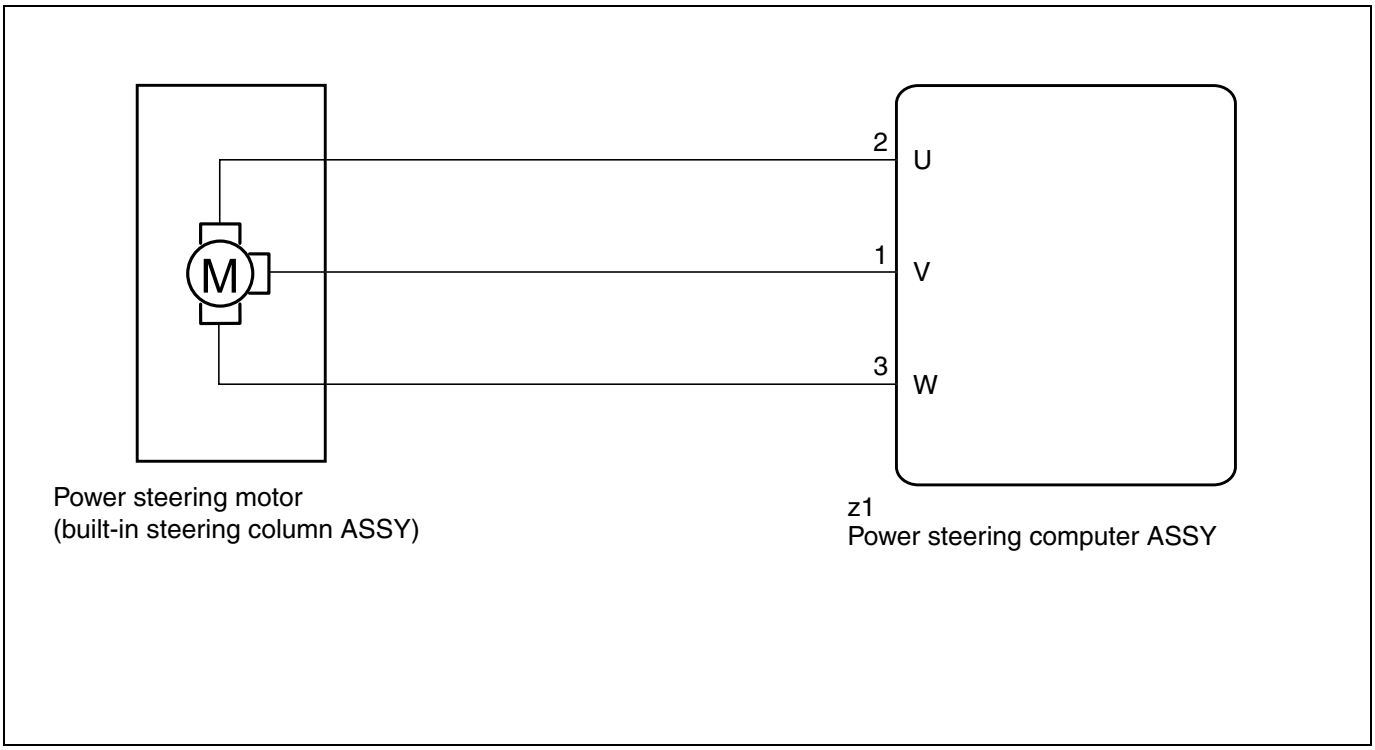

Inspection steps

CAUTION:

Always perform a steering zero point calibration after replacing the steering column ASSY or power steering computer ASSY. (Refer to PA - 12)

1	Connector connection check

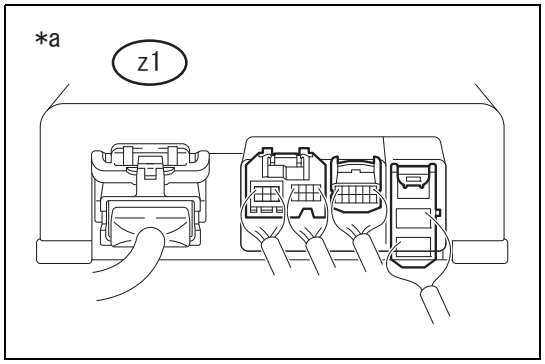

(1) Check the connection state of power steering motor connector z1.

Criteria: The power steering motor connector is properly connected to the power steering computer ASSY.

Captions in illustration

*a	Connector connected (Power steering computer ASSY)

NG → Connect it securely.

OK

2	Reading the SSM4 data (motor terminal voltage (U, V, W phases))

(1) Use the SSM4 to check the [Motor Terminal Volt(U, V, W)]. (Refer to PA - 15)

SSM4 screen: [Power Steering] →[Select Function] →[Data monitor]

Item name	Description/display range	Normal value	Remarks
[Motor Terminal Volt(U)]	Indicates the motor U terminal voltage. Display range: 0.000 to 98.000V	Varies within 4 - 35 V: During engine start, steering operation	-

PA

Item name	Description/display range	Normal value	Remarks
[Motor Terminal Volt(V)]	Indicates the motor V terminal voltage. Display range: 0.000 to 98.000V	Varies within 4 - 35 V: During engine start, steering operation	-
[Motor Terminal Volt(W)]	Indicates the motor W terminal voltage. Display range: 0.000 to 98.000V	Varies within 4 - 35 V: During engine start, steering operation	-

Criteria: During engine start and steering operation, this varies within 4 - 35 V.

NG → Replacement of the steering column ASSY (Refer to SR - 54)

OK

Replacement of the power steering computer ASSY (Refer to PA - 40)

DTC C1528 Motor rotation angle sensor

Description of functions

As part of the fail safe function, power assist is suspended when a motor rotation angle sensor malfunction diagnosis code is being output.

DTC No.	Detected item	Inspection parts
C1528	Motor rotation angle sensor malfunction	• Motor rotation angle sensor (integrated into the steering column ASSY) • Power steering computer ASSY

Circuit figure

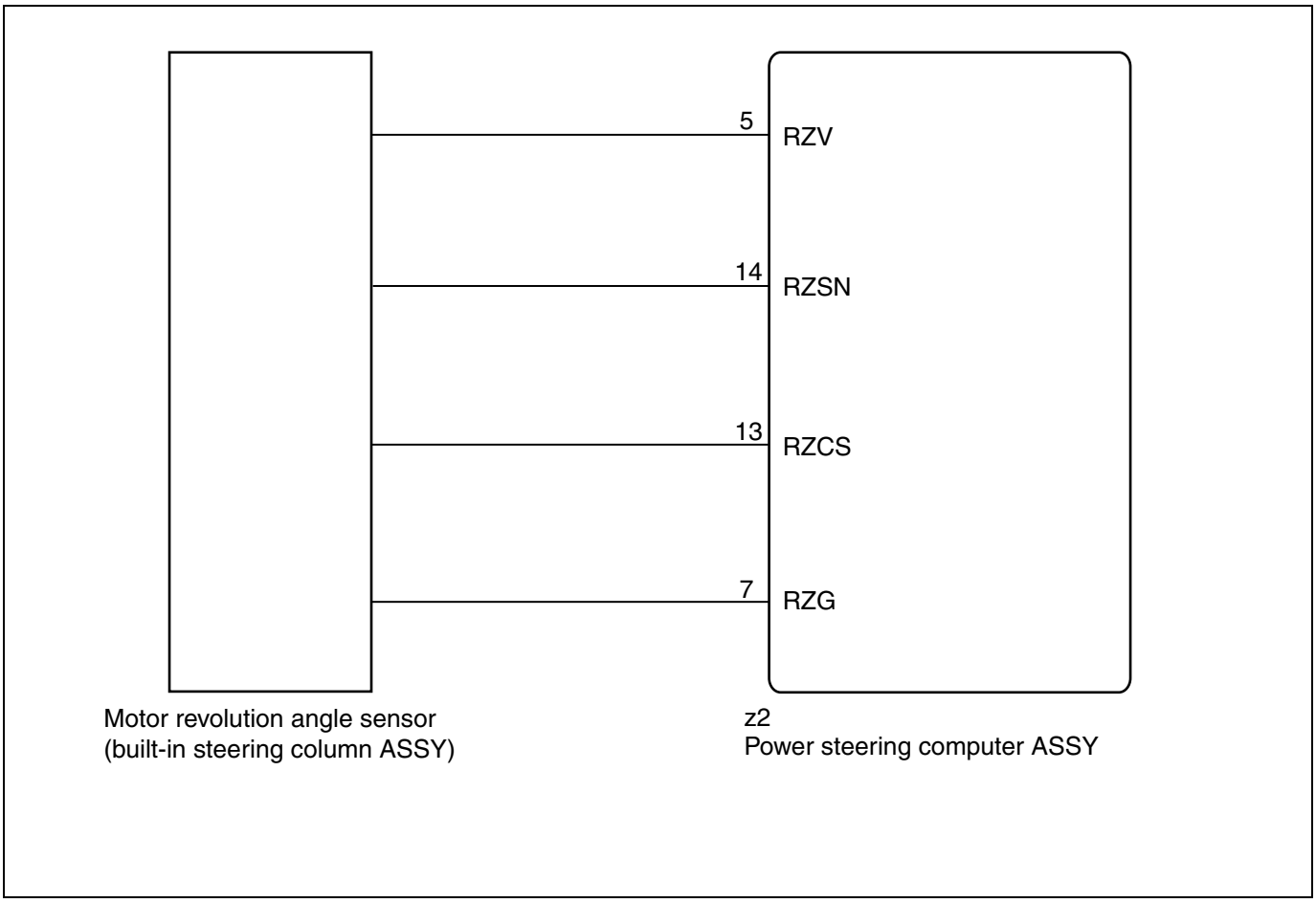

Inspection steps

CAUTION:

Always perform a steering zero point calibration after replacing the steering column ASSY or power steering computer ASSY. (Refer to PA - 12)

1	Connector connection check

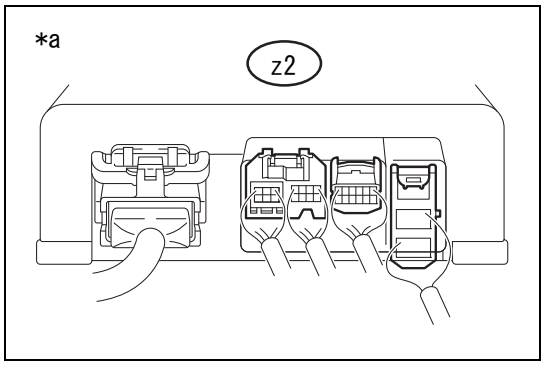

(1) Check the connection state of motor rotation angle sensor connector z2.

Criteria: The motor rotation angle sensor connector is properly connected to the power steering computer ASSY.

Captions in illustration

*a	Connector connected (Power steering computer ASSY)

NG → Connect it securely.

OK

2	Reading SSM4 data (motor rotation angle)

(1) Use the SSM4 to check the [Motor Rotation Angle]. (Refer to PA - 15)

PA

SSM4 screen: [Power Steering] →[Select Function] →[Data monitor]

Item name	Description/display range	Normal value	Remarks
Motor rotation angle	Indicates the motor rotation angle. Display range: 0.000 to 360.000deg	Varies between 0 and 360 deg: During engine start, steering operation	Check it while lightly shaking the wire harnesses up/down and left/right.

Criteria: During engine start and steering operation, this varies between 0 - 360 deg.

NG → Go to Step 3.

OK

Replacement of the power steering computer ASSY (Refer to PA - 40)

3	Inspection of the steering column ASSY (motor rotation angle sensor)

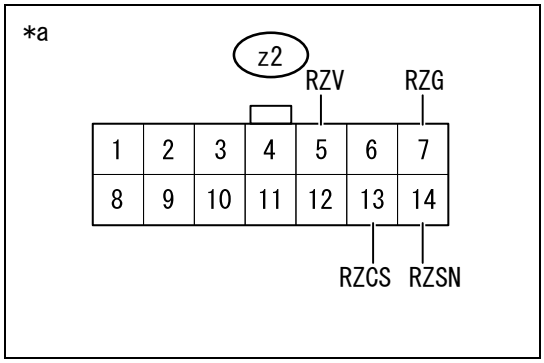

(1) Disconnect the motor rotation angle sensor connector z2 from the power steering computer ASSY.
(2) Measure the resistance of the steering column ASSY side connector.

Resistance

Inspection terminals	Inspection conditions	Standard value
z2-5(RZV) - z2-7(RZG)	Always (23°C)	27.6 to 41.4Ω
z2-14(RZSN) - z2-7(RZG)	Always (23°C)	75.2 to 112.8Ω
z2-13(RZCS) - z2-7(RZG)	Always (23°C)	73.6 to 110.4Ω

Captions in illustration

*a	Front side of vehicle wiring harness connector (Power steering computer ASSY connector)

NG → Replacement of the steering column ASSY (Refer to SR - 54)

OK

Replacement of the power steering computer ASSY (Refer to PA - 40)

DTC	C1541	Vehicle Speed Signal Failure 1

Description of functions

The power steering computer ASSY uses CAN communication to input the vehicle speed signal from the skid control computer (brake actuator ASSY).

DTC No.	Detected item	Inspection parts
C1541	Vehicle speed signal abnormal	• Speed sensor system • Vehicle stability control system • CAN communication system • Power steering computer ASSY

PA

Inspection steps
CAUTION:
Always perform a steering zero point calibration after replacing the power steering computer ASSY. (Refer to PA - 12)

1	Diagnosis codes check (CAN communication system)

(1) Use the SSM4 to check whether diagnosis code U0416 (VDC data error) is not being output. (Refer to PA - 10)
Criteria: U0416 is not output.

NG → Progress to the appropriate diagnosis code (Refer to PA - 35)

OK

2	Diagnosis codes check (Vehicle stability control system)

(1) Using the SSM4, check the Vehicle stability control system diagnosis codes. (Refer to PA - 10)
Criteria: No diagnosis code is output.

NG → Go to "Vehicle stability control system (list of diagnostic codes)". (Refer to BC - 6)

OK

Replacement of the power steering computer ASSY (Refer to PA - 40)

DTC	C1551	Power Supply Voltage Failure

Description of functions
As part of the fail safe function, power assist is suspended or limited when there is a power supply system malfunction.

DTC No.	Detected item	Inspection parts
C1551	IG power supply circuit is open or shorted.	• Power steering computer ASSY • Power supply system • ECM IG1 fuse • Wiring harness or connector

Circuit figure

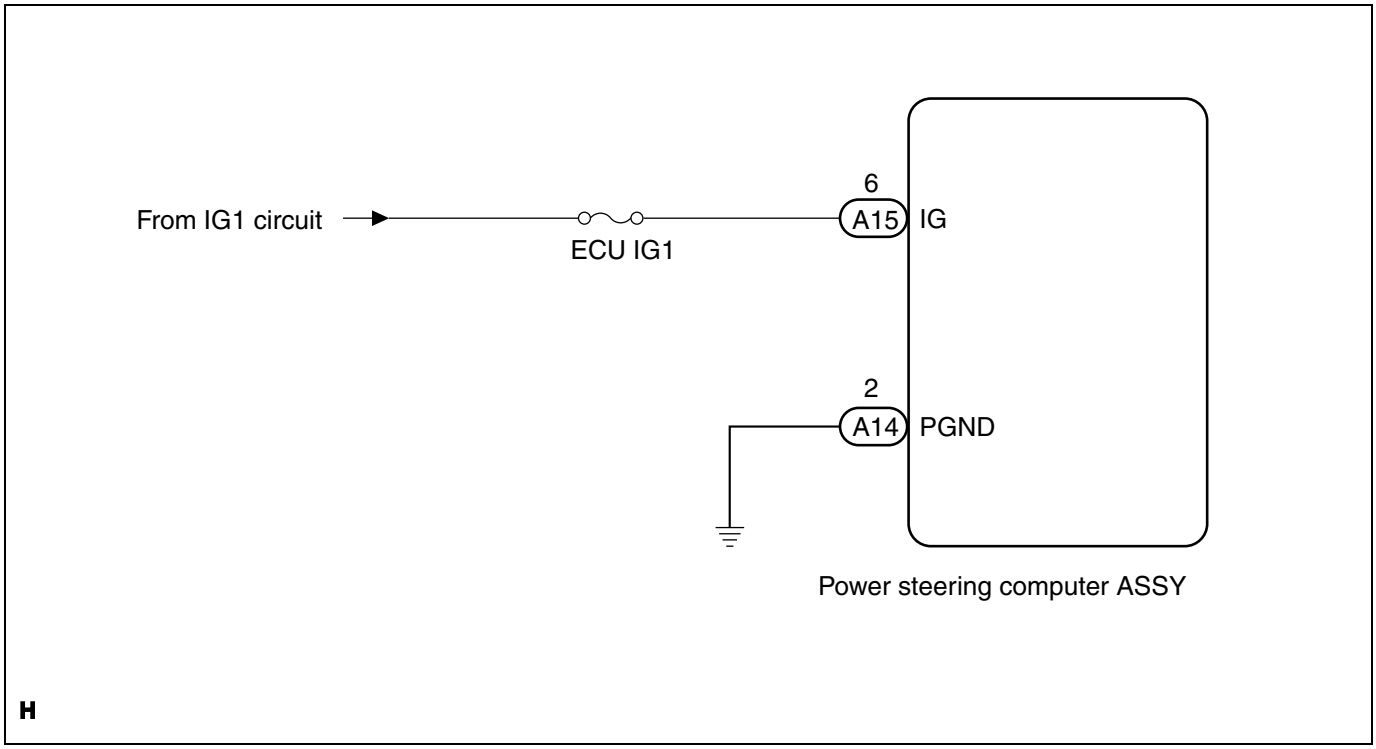

Inspection steps

CAUTION:

Always perform a steering zero point calibration after replacing the power steering computer ASSY. (Refer to PA - 12)

NOTE:

Before performing troubleshooting, check the fuse for this circuit.

1	Reading SSM4 data (IG power supply voltage)

(1) Use the SSM4 to check the [Ignition Power Supply Voltage]. (Refer to PA - 15)

SSM4 screen: [Power Steering] →[Select Function] →[Data monitor]

Item name	Description/display range	Normal value	Remarks
[Ignition Power Supply Voltage]	Indicates the ECM power supply state. Display range: 0.0000 to 20.1531V	9 to 16V: IG ON	-

Voltage: 9 - 16 V (When IG ON)

NG → Go to Step 2.

OK

Replacement of the power steering computer ASSY (Refer to PA - 40)

2	Inspection of the wiring harness and connector (IG power supply and ground)

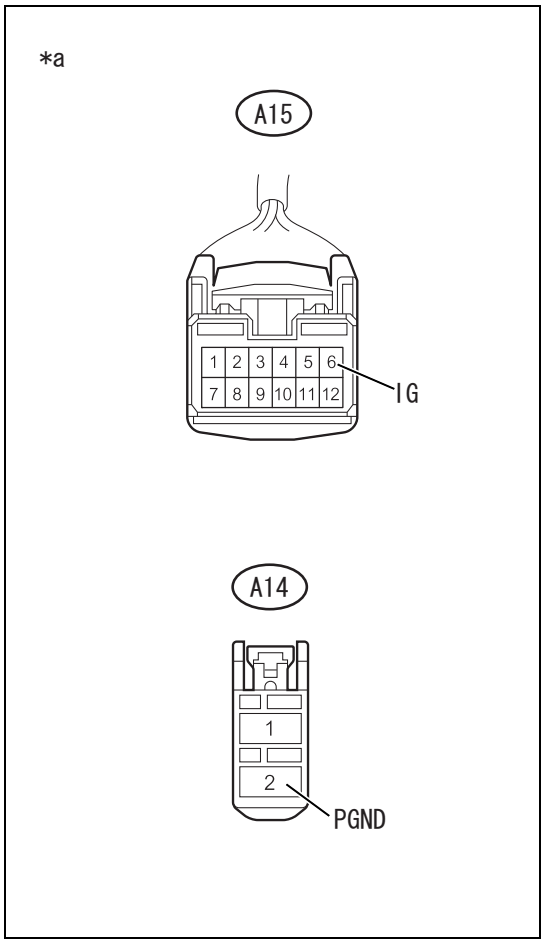

(1) Disconnect the power steering computer ASSY connectors A14 and A15.
(2) Measure the voltage and resistance of the connectors on the vehicle harness side.

Voltage

Inspection terminals	Inspection conditions	Standard value
A15-6(IG) - Chassis ground	IG ON	9 to 16V

Resistance

Inspection terminals	Inspection conditions	Standard value
A14-2 (PGND) - Chassis ground	Always	Less than 1 Ω

Captions in illustration

*a	Front side of vehicle wiring harness connector (Power steering computer ASSY connector)

NG → Repair or replacement of wiring harness or connector

OK

Replacement of the power steering computer ASSY (Refer to PA - 40)

DTC	C1552	PIG power supply voltage malfunction

Description of functions

As part of the fail safe function, power assist is suspended when there is a PIG power supply malfunction.

DTC No.	Detected item	Inspection parts
C1552	PIG power supply voltage malfunction	• EPS fuse • Power steering computer ASSY • Wiring harness or connector

Circuit figure

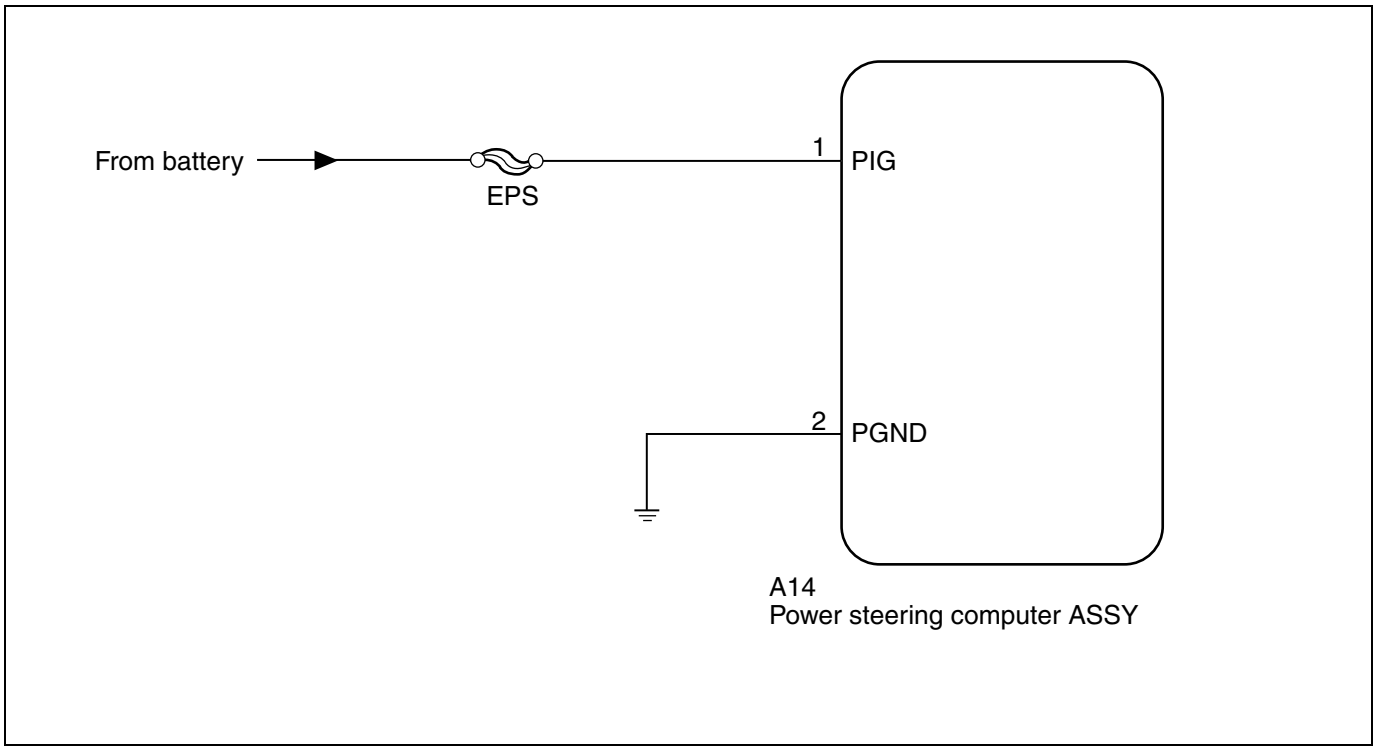

Inspection steps

CAUTION:

Always perform a steering zero point calibration after replacing the power steering computer ASSY. (Refer to PA - 12)

NOTE:

Before performing troubleshooting, check the fuse for this circuit.

1	Reading SSM4 data (PIG power supply)

(1) Use the SSM4 to check the [PIG Power Supply]. (Refer to PA - 15)

SSM4 screen: [Power Steering] →[Select Function] →[Data monitor]

Item name	Description/display range	Normal value	Remarks
[PIG Power Supply]	Indicates the power supply voltage to drive the motor. Display range: 0.0000 to 20.1531V	9 to 16V: Always	-

Voltage: 9 - 16 V (always)

NG → Go to Step 2.

OK

Replacement of the power steering computer ASSY (Refer to PA - 40)

2	Inspection of the wiring harness and connector (PIG power supply and ground)

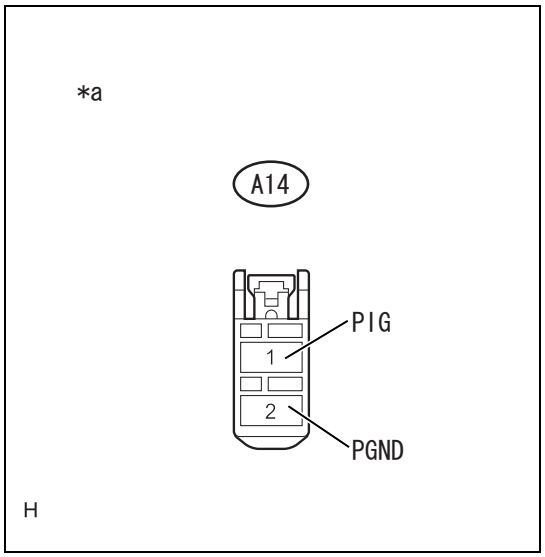

(1) Disconnect the power steering computer ASSY connector A14.
(2) Measure the voltage and resistance of the connectors on the vehicle harness side.

Voltage

Inspection terminals	Inspection conditions	Standard value
A14-1(PIG) - Chassis ground	Always	9 to 16V

Resistance

Inspection terminals	Inspection conditions	Standard value
A14-2 (PGND) - Chassis ground	Always	Less than 1 Ω

Captions in illustration

*a	Front side of vehicle wiring harness connector (Power steering computer ASSY connector)

NG → Repair or replacement of wiring harness or connector

OK

Replacement of the power steering computer ASSY (Refer to PA - 40)

DTC C1581 Assist map not written

Description of functions

Assist map writing of the power steering is undone.

DTC No.	Detected item	Inspection parts
C1581	• In the initial condition when it is delivered • The assist map of the power steering has been cleared.	• CAN communication system • Power steering computer ASSY

Inspection steps

CAUTION:

- Always perform a steering zero point calibration after replacing the power steering computer ASSY.
- Delete the assist map before performing troubleshooting.

1	Diagnosis codes

(1) Start the engine.
(2) Use the SSM4 to recheck the diagnosis codes. (Refer to PA - 10)

Result

Result	Go to
Diagnosis codes are output.	A
C1581 is not output.	B

B → Functioning properly (The assist map is written.)

PA

A

2	Diagnosis code check

(1) Check if C1583 or C1534 is not output.
Criteria: Neither C1583 nor C1534 is output.

NG → Progress to the "output code flow chart". (Refer to PA - 6)

OK

Replacement of the power steering computer ASSY (Refer to PA - 40)

NOTE:
After repeating this diagnosis three times, replace the power steering computer ASSY.

DTC C1582 Assist Map Number Mismatch

Description of functions
The assist map of the power steering does not match the vehicle information.

DTC No.	Detected item	Inspection parts
C1582	The assist map of the power steering does not match the combination meter.	• Combination meter ASSY • Power steering computer ASSY

Inspection steps
CAUTION:
- Always perform a steering zero point calibration after replacing the power steering computer ASSY.
- Before performing troubleshooting, check that a genuine combination meter is installed.

1	Assist Map Confirmation

(1) Use the SSM4 to perform [Assist Map Confirmation]. (Refer to PA - 12)

Result

Result	Go to
The same assist map as the vehicle model is not written.	A
The same assist map as the vehicle model is written.	B

B → Functioning properly (Clear the memory.)

A

2	Reconfirmation of assist map

(1) Use the SSM4 to confirm that the written-in assist map is consistent with the vehicle information (genuine combination meter).

NG → Perform [Assist Map Clear] (Refer to PA - 12).

OK

3	Diagnosis code check

(1) Check if C1583 or C1534 is not output.
Criteria: Neither C1583 nor C1534 is output.

NG → Progress to the "output code flow chart". (Refer to PA - 6)

OK

Replacement of the power steering computer ASSY (Refer to PA - 40)

DTC C1583 Assist MAP Selection Error

Description of functions
Assist map automatic selection may have been failed.

DTC No.	Detected item	Inspection parts
C1583	Information cannot be received from the combination meter.	• Combination meter ASSY • CAN communication system

Inspection steps
CAUTION:
Always perform a steering zero point calibration after replacing the power steering computer ASSY.

1	Diagnosis code check

(1) Use the SSM4 to confirm that C1581 is not output.
Criteria: C1581 is not output.

NG → Go to "CAN communication system (How to troubleshoot)" (Refer to NW - 30) and "Meter & gauge system (How to troubleshoot)" (Refer to ME - 19)

OK

2	Assist Map Confirmation

(1) Use the SSM4 to confirm that an assist map inconsistent with the vehicle information is not written. (Refer to PA - 12)

NG → Functioning properly (Clear the memory.)

OK

Perform [Assist Map Clear] (Refer to PA - 12).

DTC	U0100	Engine data not received

DTC	U0122	Lost Communication With Vehicle Dynamics Control Module

DTC	U0416	Invalid Data Received From Vehicle Dynamics Control Module

Description of functions

The power steering computer ASSY uses CAN communication to input the signals from the engine control computer and skid control computer (brake actuator ASSY).

DTC No.	Detected item	Inspection parts
U0100	Engine control computer communication malfunction	• CAN communication system • Engine control computer
U0122	Skid control computer (brake actuator ASSY) communication malfunction	• CAN communication system • Skid control computer (brake actuator ASSY)
U0416	Reception of an error signal from the skid control computer (brake actuator ASSY)	

Inspection steps

1	Reading the diagnosis codes

(1) Use the SSM4 to check the diagnosis codes. (Refer to PA - 10)

Next

Go to "CAN communication system (How to troubleshoot)" (Refer to NW - 30)

P / S warning light remains ON

Description of functions

With normal diagnosis code output, troubleshooting is recorded if the P/S warning light remains on.

When the power supply voltage input circuit (IG and PIG) for the power steering computer ASSY is open, the P/S warning light remains on.

Circuit figure

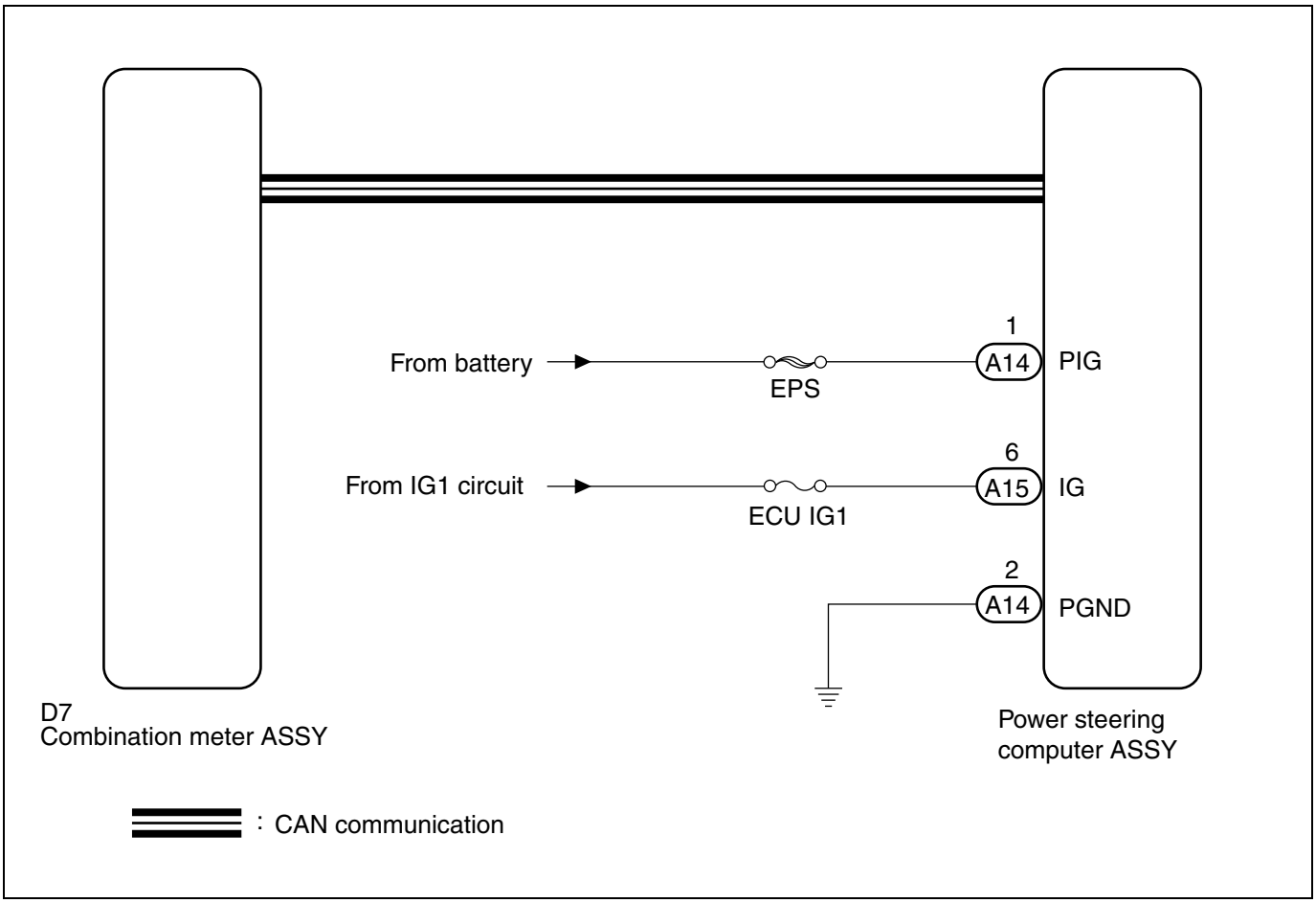

Inspection steps

CAUTION:

Always perform a steering zero point calibration after replacing the power steering computer ASSY. (Refer to PA - 12)

NOTE:

Before performing troubleshooting, check the fuse for this circuit.

1	Checking connection of each part

(1) Lightly jiggle the power steering computer ASSY connector and wiring harness in the up/down/left/right directions, and check the state of the P/S warning light.

Criteria: No variation in the P/S warning light illumination state.

NOTE:

If operating properly, the P/S warning light comes on when the ignition is turned to IG ON and goes out after the engine has started.

NG → Repair or replacement of wiring harness or connector

OK

2	Diagnosis codes check (CAN communication system)

(1) Use the SSM4 to check the CAN communication system. (Refer to NW - 30)

Criteria: No error code.

PA

NG → Go to "CAN communication system (How to troubleshoot)" (Refer to NW - 30)

OK

3	Reading SSM4 data (PIG power supply)

(1) Use the SSM4 to check the [PIG Power Supply]. (Refer to PA - 15)

SSM4 screen: [Power Steering] →[Select Function] →[Data monitor]

Item name	Description/display range	Normal value	Remarks
PIG power supply	Indicates the power supply voltage to drive the motor. Display range: 0.0000 to 20.1531V	9 to 16V: Always	-

Voltage: 9 - 16 V (always)

NG → Go to Step 5.

OK

4	Reading SSM4 data (IG power supply voltage)

(1) Use the SSM4 to check the [Ignition Power Supply Voltage]. (Refer to PA - 15)

SSM4 screen: [Power Steering] →[Select Function] →[Data monitor]

Item name	Description/display range	Normal value	Remarks
[Ignition Power Supply Voltage]	Indicates the ECM power supply state. Display range: 0.0000 to 20.1531V	9 to 16V: IG ON	-

Voltage: 9 - 16 V (When IG ON)

NG → Go to Step 6.

OK

Replacement of the power steering computer ASSY (Refer to PA - 40)

5	Inspection of the wiring harness and connector (PIG power supply and ground)

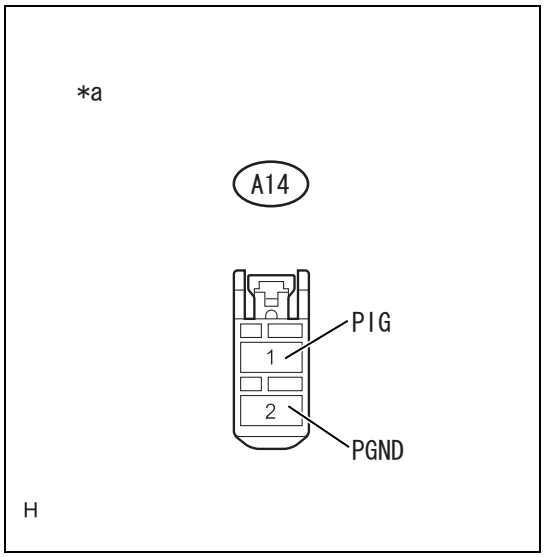

(1) Disconnect the power steering computer ASSY connector A14.
(2) Measure the voltage and resistance of the connectors on the vehicle harness side.

Voltage

Inspection terminals	Inspection conditions	Standard value
A14-1(PIG) - Chassis ground	Always	9 to 16V

Resistance

Inspection terminals	Inspection conditions	Standard value
A14-2 (PGND) - Chassis ground	Always	Less than 1 Ω

Captions in illustration

*a	Front side of vehicle wiring harness connector (Power steering computer ASSY connector)

NG → Repair or replacement of wiring harness or connector

OK → Replacement of the power steering computer ASSY (Refer to PA - 40)

6	Inspection of the wiring harness and connector (IG power supply and ground)

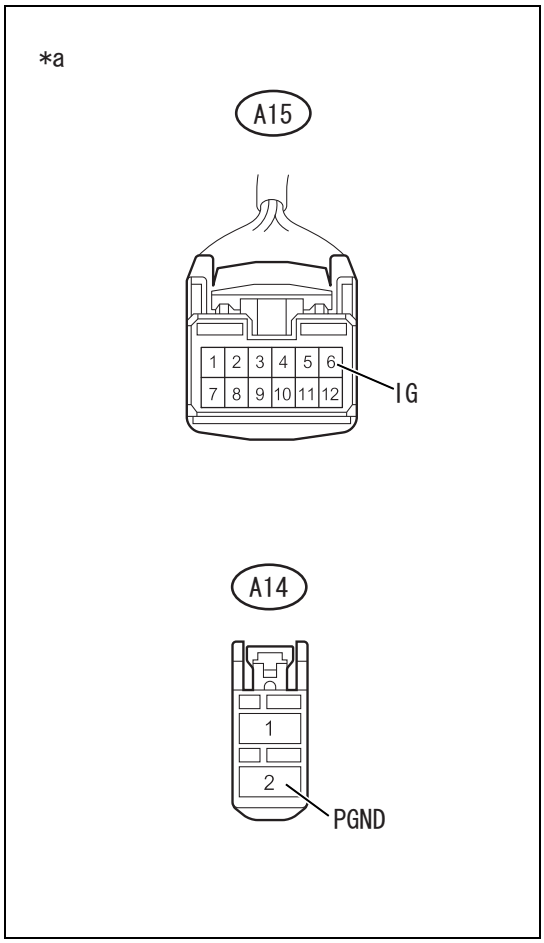

(1) Disconnect the power steering computer ASSY connectors A14 and A15.
(2) Measure the voltage and resistance of the connectors on the vehicle harness side.

Voltage

Inspection terminals	Inspection conditions	Standard value
A15-6(IG) - Chassis ground	IG ON	9 to 16V

Resistance

Inspection terminals	Inspection conditions	Standard value
A14-2 (PGND) - Chassis ground	Always	Less than 1 Ω

Captions in illustration

*a	Front side of vehicle wiring harness connector (Power steering computer ASSY connector)

NG → Repair or replacement of wiring harness or connector

OK

Replacement of the power steering computer ASSY (Refer to PA - 40)

Power steering computer

Exploded view

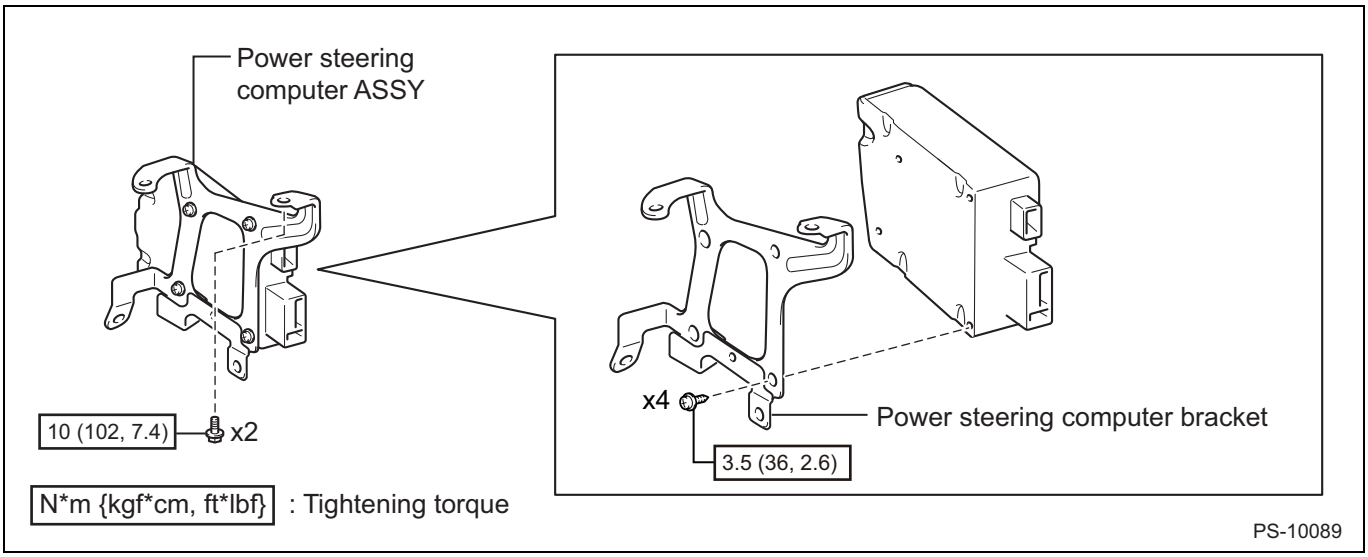

Removal

1. Correct handling and precautions for operation (Refer to PA - 3)
2. Remove the instrument panel junction block ASSY (Refer to PD - 25)

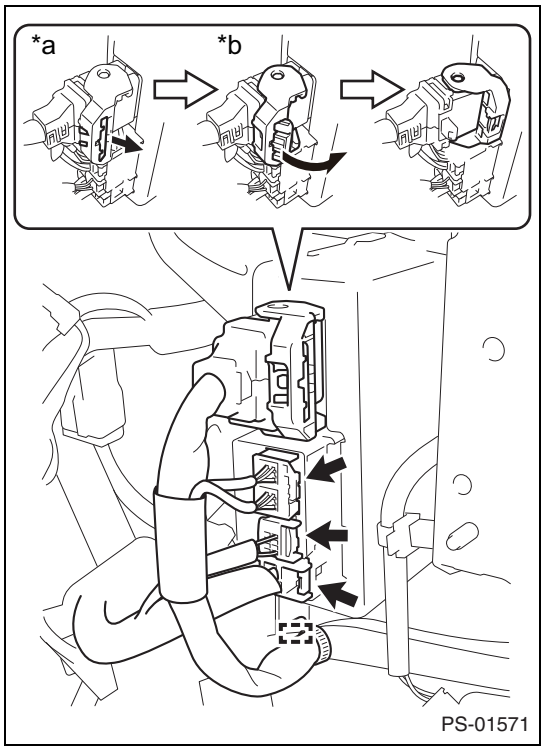

3. Remove the power steering computer ASSY.
   (1) Disconnect the connector from the power steering computer ASSY.

Captions in illustration

*a	Pull out the lock.
*b	Fold down the lock lever.

NOTE:
As shown in the figure, after pulling out the lock for the lock lever, fold down the lock lever and remove the connector.

   (2) Disconnect the wiring harness clamp from the power steering computer bracket.
   (3) Disconnect the three connectors from the power steering computer ASSY.

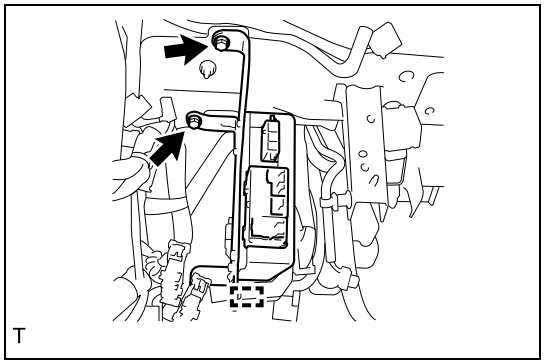

(4) Undo the two bolts, release the clamp, and take off the power steering computer ASSY.

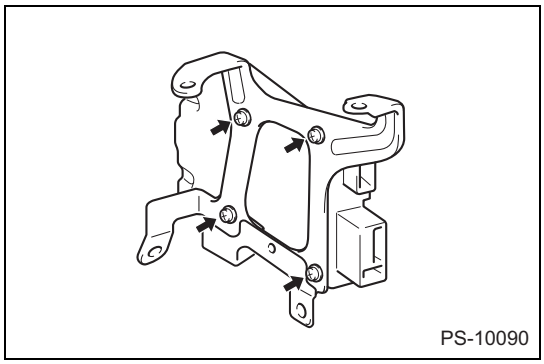

4. Remove the power steering computer bracket.
   (1) Undo the 4 screws and take off the power steering computer bracket.

Installation

1. Correct handling and precautions for operation (Refer to PA - 3)
2. Power steering computer bracket installation.
   (1) Install the power steering computer bracket in place with the four screws.
   Standard value:T=3.5N·m {36kgf·cm} {2.6ft·lbf}
3. Install the power steering computer ASSY.
   (1) Install the power steering computer ASSY in place with 2 bolts.
   Standard value:T=10N·m {102kgf·cm} {7.4 ft·lbf}
   (2) Connect the three connectors to the power steering computer ASSY.

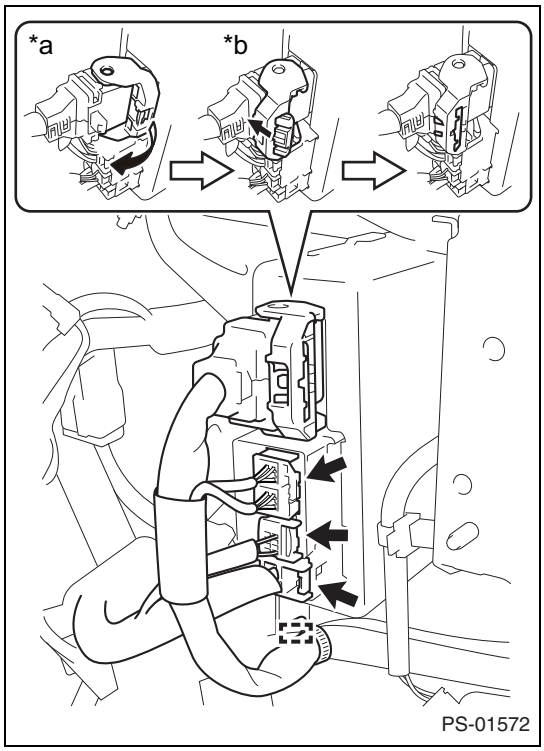

(3) Ensure that the connectors are securely connected to the power steering computer ASSY.

Captions in illustration

*a	Fold down the lock lever.
*b	Press in the lock.

NOTE:
As shown in the figure, fold down the connector lock lever to establish a connection and push in the lock for the lock lever securely.

(4) Install the wiring harness clamp to the power steering computer bracket.

4. Installation of the instrument panel junction block ASSY (Refer to PD - 27)
5. Steering zero point calibration
   (1) Always perform a steering zero point calibration after replacing the power steering computer ASSY. (Refer to PA - 12)

Steering column

Steering lock system

Precautions SR-2
Parts location SR-3
List of diagnostic codes SR-4
Symptom table SR-4
Description of functions SR-4
How to troubleshoot SR-4
Checking / clearing diagnostic codes SR-6
Diagnosis system SR-7
Circuit figure SR-8
ECM terminal arrangement SR-9
Data monitor / active test SR-10
B2781 . . . . . SR-14
B2782 . . . . . SR-16
B2788 . . . . . SR-19
The steering lock cannot be released (cannot start the engine) (without ID code box) SR-21
The steering lock does not operate (without ID code box) SR-27
The steering lock cannot be released (cannot start the engine) (with ID code box) SR-32
The steering lock does not operate (with ID code box) SR-40

Steering system

Precautions SR-49
On-vehicle inspection SR-49
Symptom table SR-49

Steering column ASSY

Exploded view SR-51
Removal SR-54
Disassembly SR-57
Assembly SR-60
Installation SR-62
Unit inspection SR-64

Steering wheel

Exploded view SR-66
Removal SR-67
Disassembly SR-68
Assembly SR-69
Installation SR-69

Steering pad switch

Exploded view SR-70
Removal SR-70
Installation SR-71
Unit inspection SR-71

Steering lock system

Precautions

1. Precautions when checking diagnosis codes
   (1) As the steering lock actuator ASSY (Steering lock ECM) does not store past diagnostics, when diagnosis codes are output, do not turn the ignition to IG OFF or perform any deletions until diagnosis code checking and recording is completely finished.

2. Precautions when attaching/detaching the battery ground terminal or during a battery voltage drop
   (1) After attaching/detaching the battery ground terminal or when there is a drop in battery voltage, after the battery issue has been resolved you may not be able to release the steering lock or start the engine unless you first open and close the driver's door while the ignition is in the IG OFF state.
3. Precautions when replacing the steering lock actuator ASSY (Steering lock ECM)
   (1) After replacing the steering lock actuator ASSY (Steering lock ECM), before starting the engine be sure to turn the steering mechanism to the left and right to confirm that the steering is not locked. If the steering is locked, perform the lock procedure and unlock it again. This will prevent the engine from being started while the steering lock is on.
4. Precautions when replacing the ECM
   (1) When replacing any of the following parts, please refer to the "Registration manual for immobilizer".
      (a)Smart key computer ASSY (Collation ECM)
      (b)Steering lock actuator ASSY (Steering lock ECM)
      (c) Engine control computer
      (d)Electrical key transmitter SUB-ASSY (Electronic key)
      (e)ID code box (with ID code box)

SR

Parts location

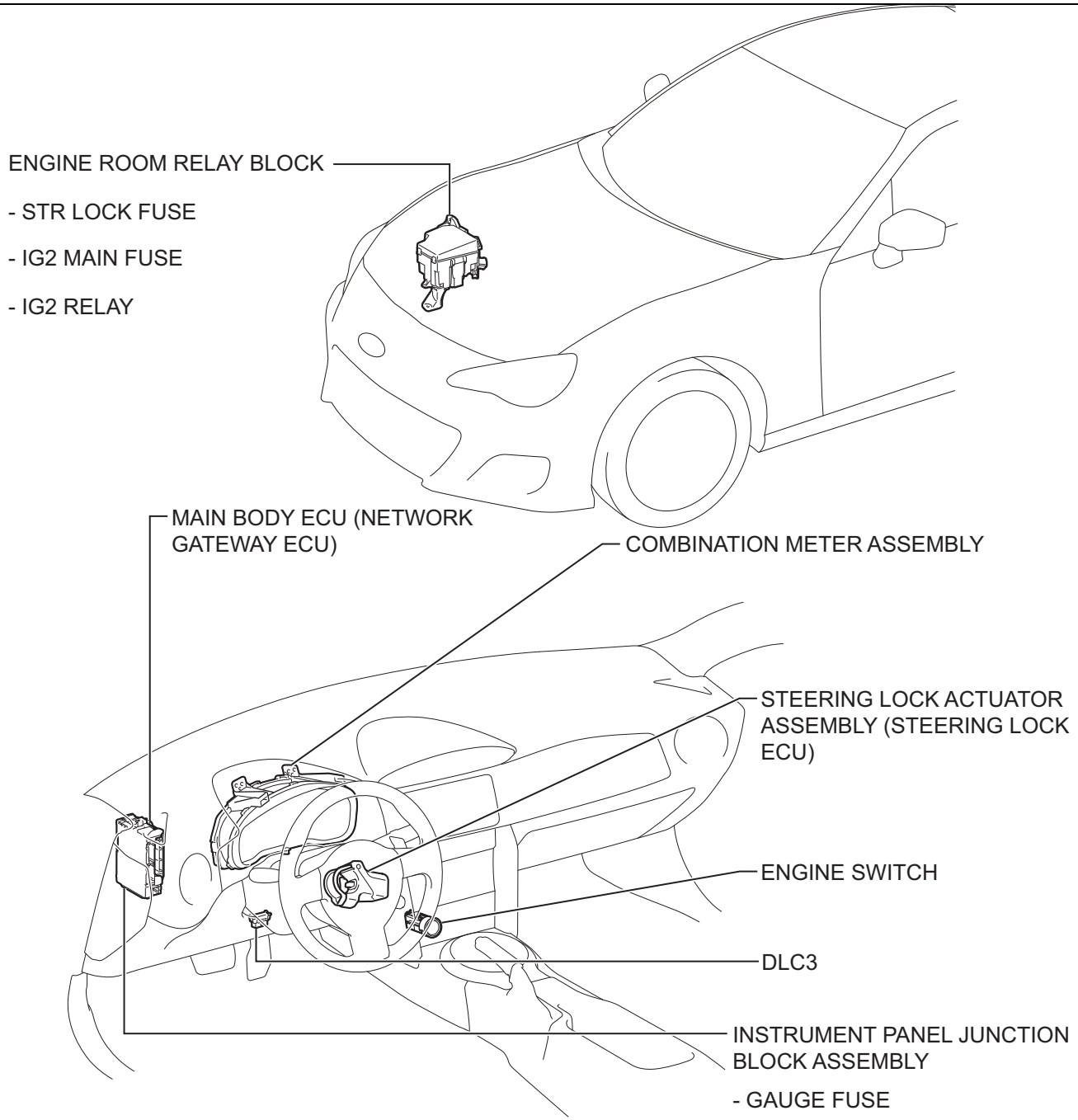

*: w/ ID Code Box

SL-02116

List of diagnostic codes

Diagnostic codes	Diagnostic items	Diagnostic code output check operation	Reference pages
B2781	[Steering Lock ECU Open/Short]	No output verification required (constantly detected)	SR - 14
B2782	[Steering lock power supply circuit abnormal (smart ECU-side abnormal)]	Steering lock/unlock operation (Lock: When the door is opened while the shifter is in the P position (Transmission A/T) and the vehicle is set to IG OFF and ACC OFF. [Unlock]: The electrical key transmitter SUB-ASSY (Electronic key) is being carried and the vehicle is set to ACC ON or IG ON.	SR - 16
B2788	[IGN2 input abnormal]	No output verification required (constantly detected)	SR - 19

Symptom table

NOTE:

- If normal operation is not possible in a specific place or time period, check that it is not being affected by any external electro-magnetic waves.
- If you experience problems after installing equipment such as new parts installed by the dealer, please confirm that that part is not affecting the vehicle by emitting electromagnetic waves.

Symptoms	Inspection items	Reference pages
The steering lock does not operate	Refer to the "Steering lock does not operate" symptom-specific flow chart.	SR - 27
The steering lock cannot be released (cannot start the engine)	Refer to the "Steering lock cannot be released (cannot start the engine)" symptom-specific flow chart.	SR - 21

Description of functions

1. Unlock operation conditions
   (1) Unlock operation will be performed when the following conditions are met.
      (a)Key collation is complete.
      (b)The vehicle is set to ACC ON or IGN ON.
      (c)A genuine collation ECM is confirmed.
2. Lock operation conditions.
   (1) Lock operation will be performed when the following conditions are met.
      (a)The vehicle is set to IG OFF and ACC OFF.
      (b)The shifter is in the P position (Transmission A/T).
      (c)A door changes from closed →open, or a door is locked (smart door lock, wireless door lock).
      (d)A genuine collation ECM is confirmed.
3. Indicator display function
   (1) When a malfunction that may cause poor steering lock ECM operation, an IG drive circuit malfunction, or vehicle speed information malfunction is detected, the combination meter ASSY orange indicator light identifies the malfunction by blinking.
4. The steering lock actuator ASSY (Steering lock ECM)
   (1) The steering lock ECM is integrated into the steering column ASSY steering lock actuator ASSY.
   (2) As the steering lock actuator ASSY (Steering lock ECM) is not connected to CAN communication, CAN communication with external parts is performed via the LIN communication-connected smart key computer ASSY (Collation ECM).

How to troubleshoot

1	Bring in the car

Next

2	Interview and phenomenon check

Next

3	Basic inspection

(1) Check the battery voltage.
Voltage: 11 to 14 V

NOTE:
- By sounding the horn, it is easy to check whether the battery is flat.
- If the battery voltage is less than 11 V, please recharge or replace it.

(2) Inspect any parts that can be checked visually such as blown fuses, wiring harness open circuit, short circuits, or poor connector contacts.

Next

4	CAN communication system functionality check

(1) Inspect the CAN communication system. (Refer to NW - 30)

Result

Result	Go to
No diagnosis code output (ECM not connected, CAN communication malfunction, and ECM communication malfunction/interruption).	A
Diagnosis code output (ECM not connected, CAN communication malfunction, or ECM communication malfunction/interruption).	B

B → Progress to "CAN communication system (How to troubleshoot)" (Refer to NW - 30)

A

5	Diagnosis code check

(1) Use the SSM4 to check and record the diagnosis codes. (Refer to SR - 6)

Result

Result	Go to
No diagnosis code output (Able to check or recreate the trouble phenomenon)	A
No diagnosis code output (Unable to check or recreate the trouble phenomenon)	B
Diagnosis code output (Steering lock system malfunction)	C

NOTE:
- When a steering lock system diagnosis code is output, please refer to the list of diagnosis codes (SR - 4).
- The steering lock actuator ASSY (Steering lock ECM) does not store past diagnostics.

B → Conduct a malfunction simulation (Refer to IN - 32)

C → Progress to the "list of diagnostic codes". (Refer to SR - 4)

A

6	Symptom table

(1) Check whether the trouble phenomenon applies to the items listed in the symptom table. (For the symptom table, please refer to SR - 4.)

SR

Result

Result	Go to
Does not apply to items in the symptom table.	A
Applies to an item in the symptom table.	B

B → Go to Step 8.

A

7	Based on the trouble phenomenon, use the following methods to perform troubleshooting

(1) Data monitor / active test (Refer to SR - 10)
(2) ECM terminal arrangement (Refer to SR - 9)

Next

8	Adjustment, repair, or replacement

Next

9	Diagnosis codes recheck

(1) Using SSM4, clear the diagnostic code. (Refer to SR - 6)
(2) Recheck the diagnosis codes (Refer to SR - 4)
NOTE:
Check the output for each diagnosis code. (Refer to SR - 4)

Result

Result	Go to
No diagnosis code output.	A
Diagnosis code output (Steering lock system malfunction)	B

B → Go to "List of diagnostic codes" (Refer to SR - 4)

A

Complete

Checking / clearing diagnostic codes

1. Reading diagnosis codes (Main body ECM (network gateway computer))
   (1) Connect the SSM4 to the DLC3 and turn the ignition to IG ON.
   (2) Through the SSM4 display, select [Each System] →[Keyless Access(Collation ECM)] →[DTC] to check the diagnostic codes.
2. Reading the diagnosis codes (Smart key computer ASSY (collation ECM)).
   (1) Connect the SSM4 to the DLC3 and turn the ignition to IG ON.

(2) Through the SSM4 display, select [Each System] →[Keyless Access(Collation ECM)] →[DTC] to check the diagnostic codes.
CAUTION:
- As the steering lock actuator ASSY (Steering lock ECM) does not store past diagnostics, when diagnosis codes are output, do not turn the ignition to IG OFF or perform any deletions until diagnosis code checking and recording is completely finished.
- As there may be storage of diagnosis codes that were initiated due to trouble with a system other than with the steering lock actuator ASSY (steering lock ECM) system, please also check and record diagnosis codes for other systems.

3. Deletion of recorded diagnosis codes
   (1) Connect the SSM4 to the DLC3 and turn the ignition to IG ON.
   (2) Select [DTC] →[Clear Memory] and follow the on-screen procedure to delete diagnosis codes.

Diagnosis system

1. Diagnosis functions
   (1) The steering lock actuator ASSY (Steering lock ECM) outputs any self-diagnosis error as a diagnosis code when an error occurs in the system. This code is able to be read with the SSM4.
   CAUTION:
   - As the steering lock actuator ASSY (Steering lock ECM) does not store past diagnostics, when diagnosis codes are output, do not turn the ignition to IG OFF or perform any deletions until diagnosis code checking and recording is completely finished.
   - As there may be storage of diagnosis codes that were initiated due to trouble with a system other than with the steering lock actuator ASSY (steering lock ECM) system, please also check and record diagnosis codes for other systems.

   (2) As the steering lock actuator ASSY (Steering lock ECM) is not connected to CAN communication, communication with external parts is performed via the LIN communication-connected smart key computer ASSY (Collation ECM).
   (3) The steering lock actuator ASSY (Steering lock ECM) only outputs the current error as a diagnosis code, and does not store past diagnostics.

Circuit figure

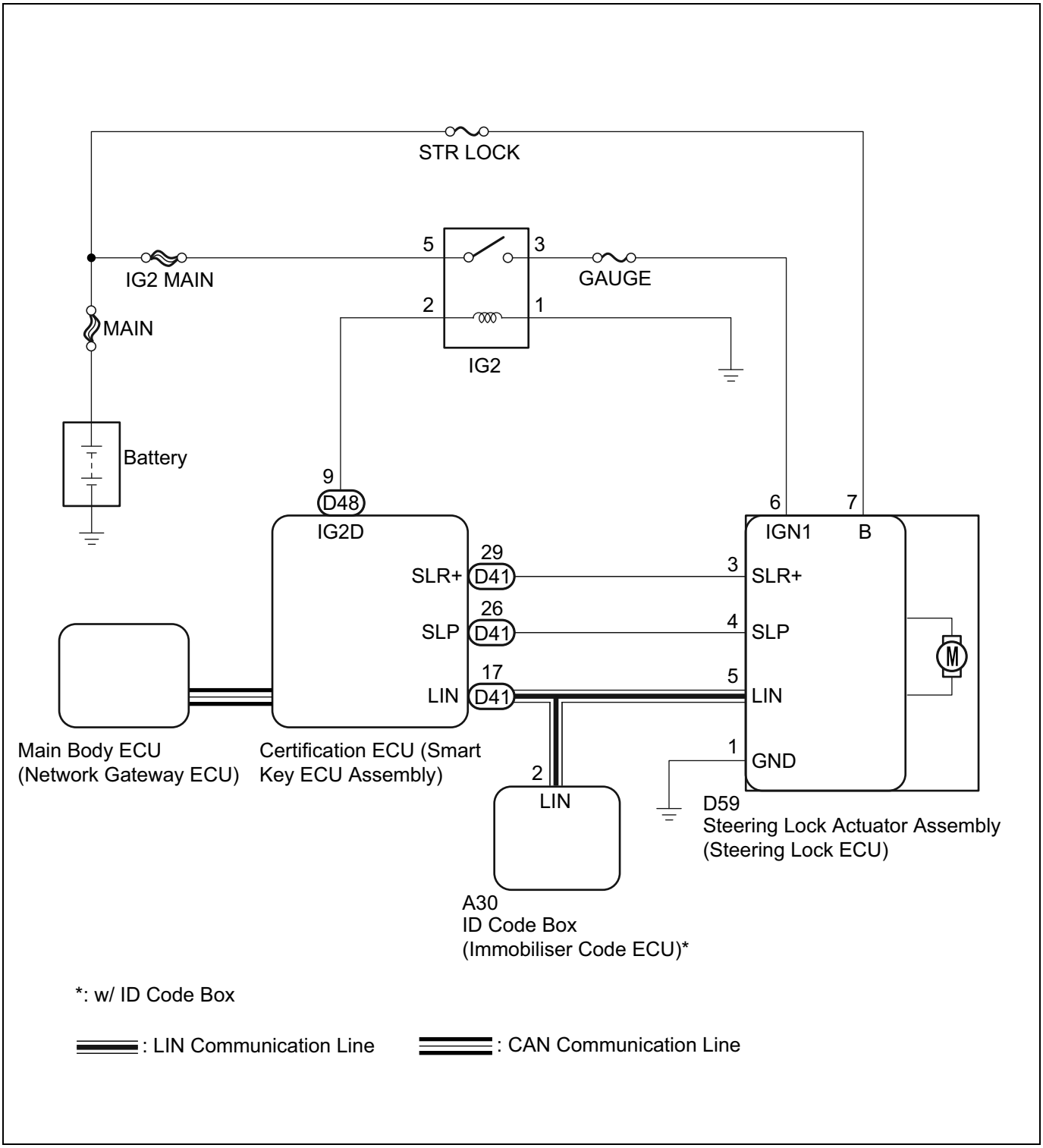

ECM terminal arrangement

1. Steering lock actuator ASSY (Steering lock ECM)

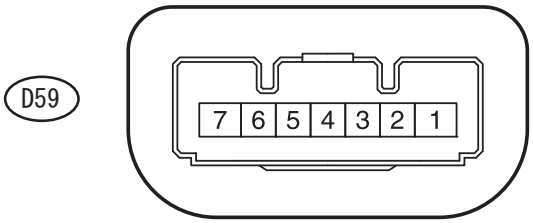

(1) Measure the voltage, resistance, and waveform.

Terminal No. (Terminal symbol)	Input/Output	Terminal description	Inspection conditions	Standard value	Related data monitor
D59-1 (GND) ←→Chassis ground	-	GND	Always	Less than 1 Ω	-
D59-3 (SLR+) ←→D59-1 (GND)	Input	Steering lock motor drive permission signal	When all of the following conditions are met and the doors are closed →open, the steering lock motor is driven. • The steering lock is unlocked • IG & ACC OFF • The shifter is in the P position (Transmission A/T)	Pulse generation (waveform 1)	Check • Motor power supply short circuit history • Unlock request reception state • Lock request reception state
D59-4 (SLP) ←→D59-1 (GND)	Output	Steering lock bar position	Steering lock →Steering unlock	11 to 14 V →1.2 V or less	Check • Push button start malfunction history • Sensor malfunction history (Steering lock)
D59-5 (LIN) ←→D59-1 (GND)	Input/Output	LIN communication line	-	-	Check • Communication allowed state (Steering lock)
D59-6 (IGN1) ←→D59-1 (GND)	Input	IG2 input power supply	IG OFF →IG ON	Less than 1 V →11 to 14 V	Check • IG SW
D59-7 (B) ←→Chassis ground	Input	Power supply	Always	11 to 14 V	-

CAUTION:
The steering lock actuator ASSY (Steering lock ECM) is incorporated with one motor and two sensors.
NOTE:

- When performing measurements while the steering lock actuator motor is stopped, measurements can be made without any special operation.
- When performing measurements while the steering lock actuator motor is running, the following operations are necessary.
  - To unlock the steering, bring the electrical key transmitter SUB-ASSY (Electronic key) into the vehicle and turn the ignition to ACC ON or IG ON.
  - To lock the steering, open a door while the vehicle is set to IG OFF & ACC OFF, and the shifter is in the P position (Transmission A/T).

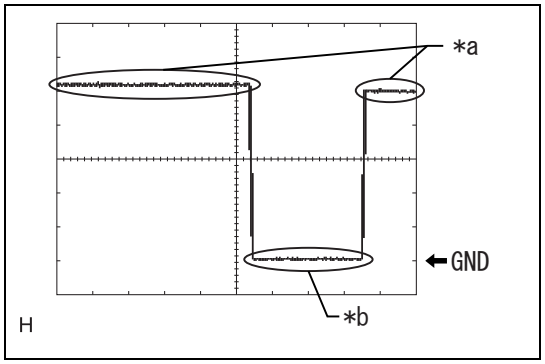

(2) Oscilloscope waveform.
(a)Waveform 1

Item	Contents
Measuring terminal	D59-3 (SLR+) ←→D59-1 (GND)
Equipment setting	2 V/DIV, 200 ms/DIV
Measuring condition	Steering lock actuator motor stopped →Steering lock actuator motor running →Steering lock actuator motor stopped

Captions in illustration

*a	Steering lock actuator motor stopped
*b	Steering lock actuator motor running

Data monitor / active test

CAUTION:
As the steering lock actuator ASSY (Steering lock ECM) carries out data communication with the SSM4 via the CAN communication function of the smart key computer ASSY (Collation ECM), it cannot perform normal monitoring if there is a CAN communication or smart key computer ASSY (Collation ECM) malfunction.

1. Data monitor
   NOTE:
   The SSM4 can be used to read the input to the steering lock actuator ASSY (Steering lock ECM), communication, and operating conditions.
   (1) Use the SSM4 and data monitor to determine functionality and narrow down the defective part.

[SSM4 screen: [Each System] →[Keyless Access(Power Supply ECM)] →[Data monitor]]

Item name	Description/display range	Normal value	Remarks
[Shift P signal] *1	Shift position (P) state Display range: ON/OFF	ON: The shift is in the P position OFF: The shift is not in the P position	Used for determining the presence of a shift switch (P) failure.
[Steering unlock SW]	Indicates the steering unlock sensor signal output from the steering lock actuator ASSY (Steering lock ECM). Display range: ON/OFF	ON: Steering unlock OFF: Steering lock	• The steering will be locked when any door is opened (or closed) while the vehicle is set to IG OFF and the shifter is in the P position (Transmission A/T). • The steering will be unlocked when the electrical key transmitter SUB-ASSY (Electronic key) is inside the vehicle and the vehicle is set to ACC ON or IG ON. • The engine cannot be started when the steering unlock signal is OFF.
[Steering lock unlock wait time-out]	Steering lock unlock malfunction Display range: Yes/No	Yes: Unlocking malfunction (For example: When the lock bar is stuck, etc.) No: Lock/Unlock functioning properly	If the engine cannot be started due to a malfunction in the steering lock/unlock, "Yes" is displayed.

*1: Transmission A/T

[SSM4 screen: [Each System] →[Keyless Access(Collation ECM)] →[Data monitor]]

Item name	Description/display range	Normal value	Remarks
[Ignition]	Indicates the IG power supply input state of the smart key computer ASSY (Collation ECM). Display range: ON/OFF	ON: IG ON OFF: IG OFF	When it is in the ACC ON state, "OFF" is displayed.
[Immobilizer]	Indicates the state of the engine immobilizer system determined by the smart key computer ASSY (Collation ECM). Display range: Unset / Set	Unset: Engine immobilizer unset (engine start possible) state. Set: Engine immobilizer set (engine start prohibited) state.	The engine cannot be started when this item displays "Set". NOTE: • The security indicator light blink when this item is "Set". • The security indicator light is linked to the immobilizer set and unset state. This is unrelated to the steering lock/unlock states.

Item name	Description/display range	Normal value	Remarks
[Sleep possible status]	Indicates the steering lock ECM sleep permission state. Display range: Yes/No	Sleep permitted: Sleep possible status No: Sleep not permitted	-
[Wake-up transmission status]	Indicates the steering lock ECM wake-up signal communication state. Display range: Yes/No	Yes: Wake-up signal transmission No: No wake-up signal transmission	-
[Lock confirmation]	Indicates the lock confirmation state of the steering lock actuator ASSY (Steering lock ECM). Display range: Set/Unset	Set: Lock confirmed Unset: Lock not confirmed	The steering is not locked when "Unset" is displayed.
[Unlock confirmation]	Indicates the unlock confirmation state of the steering lock actuator ASSY (Steering lock ECM). Display range: Set/Unset	Set: Unlock confirmed Unset: Unlock not confirmed	The steering is not unlocked when "Unset" is displayed. (The engine cannot be started.)
[Motor operation prohibition voltage evaluation]	Indicates the state of the engine start permission signal sent to the smart key computer ASSY (Collation ECM) after judgment by the steering actuator ASSY (Steering lock ECM). Display range: OK/NG	OK: Engine start permitted NG: Engine start prohibited	• When this item displays "OK", the smart key computer ASSY (Collation ECM) receives an unlock confirmation signal from the steering lock actuator ASSY (Steering lock ECM), sending the engine start permission signal. • The engine cannot be started when this item displays "NG".
[Sensor abnormal (past)]	Indicates any history of steering lock actuator ASSY (Steering lock ECM) internal position sensor malfunction. Display range: abnormal / normal	Abnormal: There is a history of the steering lock actuator ASSY (Steering lock ECM) internal lock/unlock sensors both being in an ON state at the same time (usually they are not both ON). OK: There is no history of steering lock actuator ASSY (Steering lock ECM) internal lock/unlock sensor malfunction.	When this item displays "NG", there may be a steering lock actuator ASSY internal position sensor malfunction, or mechanical fault.
[Motor power supply short-circuit abnormal (past)]	Indicates the malfunction (short circuit) history for the signal sent to the steering lock actuator ASSY (Steering lock ECM) signal from the smart key computer ASSY (Collation ECM). Display range: abnormal / normal	Abnormal: Motor power supply short circuit history present OK: No motor power supply short circuit history	This item indicates the history of when there is a circuit malfunction between the smart key computer ASSY (Collation ECM) and the steering lock actuator ASSY (Steering lock ECM).
[Motor driver short-circuit abnormal (past)]	Indicates any history of steering lock actuator ASSY (Steering lock ECM) internal motor drive circuit malfunctions (short circuit). (Diagnostic code B2781 is output) Display range: abnormal / normal	Abnormal: Motor driver short circuit history present OK: No motor driver short circuit history present	This item identifies any malfunction in the steering lock actuator ASSY (Steering lock ECM) internal steering lock motor drive circuit.
[Steering lock lock/unlock command reception history]	Indicates the unlock request signal reception history. Display range: Yes/No	Yes: Unlock request signal reception history present No: No unlock request signal reception history	-
[Lock bar engagement abnormal]	Indicates the history of not being able to correctly unlock the steering after the steering lock bar is moved to the unlock position for a certain period of time. Display range: Yes/No	Yes: There is a history of lock bar engagement. No: No history of the lock bar being stuck	-
[Push start abnormal (past)]	Indicates any history of a push button start malfunction caused by the steering lock actuator ASSY (Steering lock ECM). Display range: abnormal / normal	Abnormal: Push button start malfunction history present OK: No push button start malfunction history	-
[EEPROM access abnormal]	Indicates the steering lock ECM state. Display range: abnormal / normal	Abnormal: Steering lock ECM malfunction OK: Steering lock ECM normal	-

SR

Item name	Description/display range	Normal value	Remarks
[Engine start permission request reception status]	Indicates the reception state of the engine start permission signal sent to the smart key computer ASSY (Collation ECM) after judgment by the steering lock actuator ASSY (Steering lock ECM). Display range: NG/OK	NG: When it is not yet received OK: When it has already been received	• When "OK" is displayed, the smart key computer ASSY (Collation ECM) receives an unlock confirmation signal from the steering lock actuator ASSY (Steering lock ECM), allowing engine fuel injection and ignition. • The engine cannot be started when this item displays "NG".
[L Code Check]	Indicates the collation results between the smart key computer ASSY (Collation ECM) and the steering lock actuator ASSY (Steering lock ECM). Display range: abnormal / normal	Abnormal: Collation results abnormal OK: Collation results normal	• The smart key computer ASSY (Collation ECM) and the steering lock actuator ASSY (Steering lock ECM) are unable to perform L code registration. • Steering lock cannot be performed. • Steering unlock cannot be performed. (The engine cannot be started.)
[Steering lock lock/unlock command reception history]	Indicates the unlock request signal reception state. Display range: NG/OK (10 s)	NG: IG ON, ACC ON or engine start operation not performed OK: Within 10 seconds after IG ON, ACC ON or engine start operation	• The engine cannot be started when the unlock request signal cannot be received. • If "OK" is not displayed even if the steering unlock conditions are satisfied, there may be a smart key computer ASSY (Collation ECM) malfunction.
[Steering lock lock request reception status]	Indicates the lock request signal reception state. Display range: OK (10s)/NG	OK: When a lock request is received within 10 seconds after any one of the doors is opened while the shifter is in the P position (Transmission A/T) and the vehicle ignition is turned to IG OFF. NG: Other than above	If "OK" is not displayed even if the steering lock conditions are satisfied, there may be a smart key computer ASSY (Collation ECM) malfunction.
[L Code Check(Past)]	Indicates the collation results history from between the smart key computer ASSY (Collation ECM) and the steering lock actuator ASSY (Steering lock ECM). Display range: abnormal / normal	Abnormal: There is an error history of collation results OK: There is no error history of collation results	-
[Number of Diagnostic Code(s):]	Indicates the number of diagnostic codes. Display range: 0 - 255 items	-	-

1. When the following conditions are satisfied, the steering lock will be unlocked.
   (a) The vehicle is set to ACC ON or IGN ON.
      (1) When the push button start switch is operated and the vehicle is set to ACC ON or IG ON, the electrical key transmitter SUB-ASSY (Electronic key) and the smart key computer ASSY (Collation ECM) are matched and the steering will be unlocked.
      (2) The electrical key transmitter SUB-ASSY (Electronic key) will be checked if any of the following conditions are met.
      ·The brake pedal (Transmission A/T) or the clutch pedal (Transmission M/T) are depressed and the engine is started.
      ·Within 30 seconds after a door has been opened and closed.
      ·The push button start switch is pressed.
      NOTE:
      • Key collation: When there is a match between the code transmitted by the electrical key transmitter SUB-ASSY (Electronic key) and the code calculated by the smart key computer ASSY (Collation ECM).
      • A genuine collation ECM is confirmed: Checking of the L code issued when the engine is started or the push button start switch is pressed.
      • The steering lock actuator ASSY (Steering lock ECM) uses L codes to check whether the smart key computer ASSY (Collation ECM) is a genuine ECM.

2. If the following conditions are satisfied, the steering will be locked when the smart key computer ASSY (Collation ECM) has been confirmed to be a genuine ECM.
   – The vehicle is stopped
   – No vehicle speed signal abnormal.
   – The vehicle is set to IG OFF and ACC OFF.
   – The shifter is in the P position (Transmission A/T).
   – A door changes from closed →open, or a door is locked (smart door lock, wireless door lock).

NOTE:
The following example, indicates the data monitor activity when the vehicle changes from ACC ON →IG ON →IG OFF while the shifter is in the P position (Transmission A/T) and the brake pedal (Transmission A/T) or the clutch pedal (Transmission M/T) are not depressed.

The data monitor activity when the steering is locked/unlocked

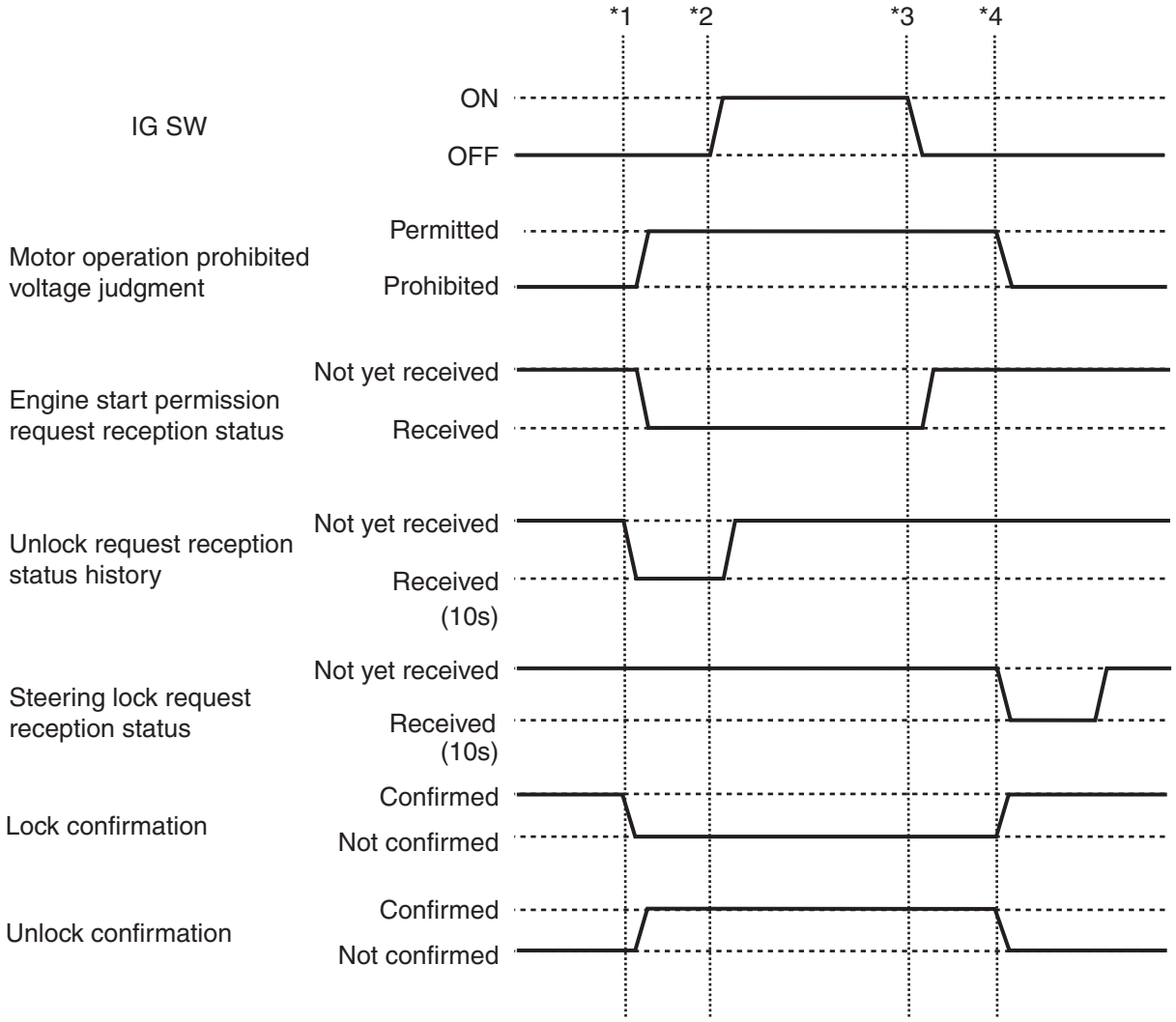

PS-01500

NOTE:
Enter the vehicle while carrying the electrical key transmitter SUB-ASSY (Electronic key), set the ignition to IG OFF and put the shifter in the P position (Transmission A/T), and perform the following operations to check each data monitor activity.

*1: Without depressing the brake pedal (Transmission A/T) or the clutch pedal (Transmission M/T), press the push button start switch and confirm that it changes over to ACC ON.
*2: Without depressing the brake pedal (Transmission A/T) or the clutch pedal (Transmission M/T), press the push button start switch and confirm that it changes over to IG ON.
*3: Press the push button start switch and confirm that it changes over to IG OFF.
*4: Open the door. (Steering lock complete)

SR

[SSM4 screen: [Each System] →[Body Control] →[Data monitor]]

Item name	Description/display range	Normal value	Remarks
[D Door Courtesy SW]	State of the driver's door courtesy light switch. Display range: Closed/Open	Closed: Driver's door is closed. [Open]: Driver's door is opened.	-

DTC	B2781	Steering Lock ECU Open/Short

Circuit description
The steering lock ECM and steering lock motor are integrated into the steering lock actuator ASSY.
The steering lock actuator ASSY (Steering lock ECM) uses the steering lock motor lock position sensor to detect the lock/unlock position.
The steering lock actuator ASSY (Steering lock ECM) is input with a lock/unlock command signal from the smart key computer ASSY (Collation ECM) and returns a lock operation signal.
As the steering lock actuator ASSY (Steering lock ECM) is not connected to CAN communication, CAN communication with external parts is performed via the LIN communication-connected smart key computer ASSY (Collation ECM).

Diagnostic codes	Detecting conditions	Faulty part	Diagnostic code output check operation
B2781	When one of the following conditions are satisfied (1 trip detection *1). • Steering lock/unlock position detection sensor malfunction. *2 • Steering lock motor drive circuit short circuit malfunction. • Steering lock motor drive circuit open malfunction.	• Steering lock actuator ASSY (Steering lock ECM) • Large-scale multiplex communication system for vehicle body [LIN]	No output verification required (constantly detected)

*1: Detects malfunctions when the vehicle is set to IG ON.
*2: Judged to be a malfunction when both detection switches are ON at the same time.

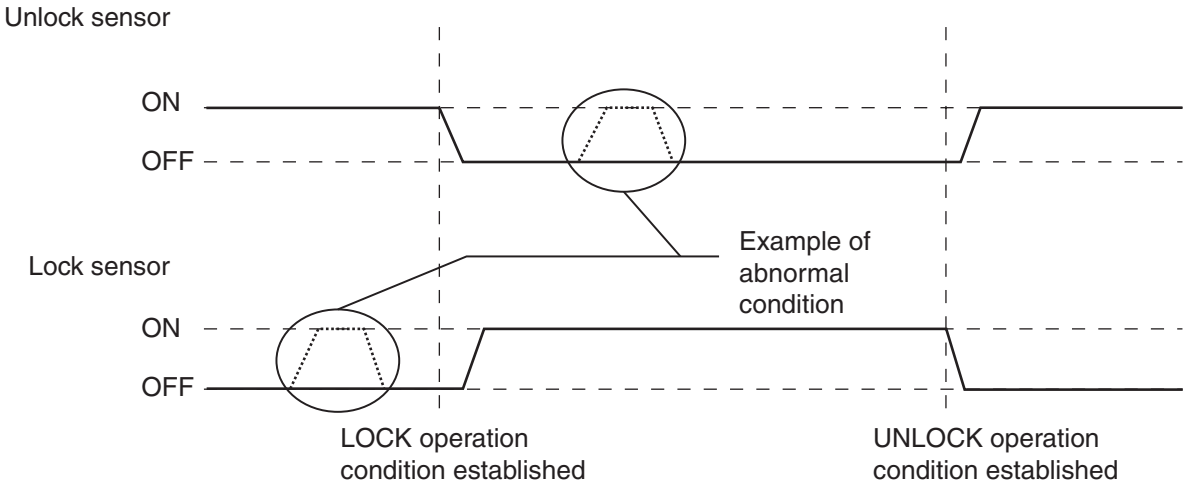

Vehicle state and fail safe measures during detection

Vehicle state during detection	Fail safe measures during detection
Steering lock, unlock cannot be performed. This means that the engine cannot be started.	Engine starting is prohibited (Does not perform cranking).

Related data monitor and active test

Diagnostic codes	Data monitor	Active test
B2781	Check • Sensor malfunction history (Steering lock) • Motor driver short circuit history	-

Inspection steps

CAUTION:

- After repair is completed, perform a diagnostic code output confirmation and check that there is no further output of diagnostic codes.
- When replacing the steering lock actuator ASSY (Steering lock ECM), please check the applicable precautions (Refer to SR - 2), and refer to the "Registration manual for immobilizer".

NOTE:

When all ECMs connected to the collation system LIN bus cannot communicate with the smart key computer ASSY (Collation ECM), diagnostic code B2785 is output.

1	Reading diagnostic codes

(1) Use the SSM4 to confirm that the large-scale multiplex communication system for vehicle body [LIN] diagnostic code B2785 is not being output. (Refer to NW - 7)

NOTE:

When a LIN communication error code is output, please check the large-scale multiplex communication system for vehicle body [LIN]. (Refer to NW - 4)

Result

Result	Go to
B2785 (LIN communication malfunction) is output.	A

Result	Go to
B2785 (LIN communication malfunction) is not output.	B

B → Replacement of the steering lock actuator ASSY (Steering lock ECM) (Refer to SR - 59)

SR

A

Proceed to the "large-scale multiplex communication system for vehicle body [LIN] (B2785 LIN communication error)" (Refer to NW - 17)

DTC	B2782	Steering lock power supply circuit malfunction (Smart ECM-side malfunction)

Circuit description

The smart key computer ASSY (Collation ECM) has a built-in power supply ECM function.

This diagnosis code is output when it is judged that there is an error in the SLR+ input that is directly input into the steering lock actuator ASSY (Steering lock ECM) from the smart key computer ASSY (Collation ECM).

As the steering lock actuator ASSY (Steering lock ECM) is not connected to CAN communication, CAN communication with external parts is performed via the LIN communication-connected smart key computer ASSY (Collation ECM).

Diagnostic codes	Detecting conditions	Faulty part	Diagnostic code output check operation
B2782	When one of the following conditions are satisfied (1 trip detection). • Steering lock motor drive indicator circuit short circuit malfunction. • Steering lock motor drive indicator circuit open malfunction. NOTE: When the LIN power supply signal and solid line power supply signals are in disagreement, it is judged to be a relative error.	• Steering lock actuator ASSY (Steering lock ECM) • Smart key computer ASSY (Collation ECM) • Wiring harness or connector	Steering lock/unlock operation (When the vehicle is stopped) (Lock: When the door is opened while the shifter is in the P position (Transmission A/T) and the vehicle is set to IG OFF and ACC OFF. [Unlock]: The electrical key transmitter SUB-ASSY (Electronic key) is being carried and the vehicle is set to ACC ON or IG ON.

Vehicle state and fail safe measures during detection

Vehicle state during detection	Fail safe measures during detection
Steering lock, unlock cannot be performed. This means that the engine cannot be started.	Engine starting is prohibited (Does not perform cranking).

Related data monitor and active test

Diagnostic codes	Data monitor	Active test
B2782	Check • Motor power supply short circuit history	Not applicable

Circuit figure

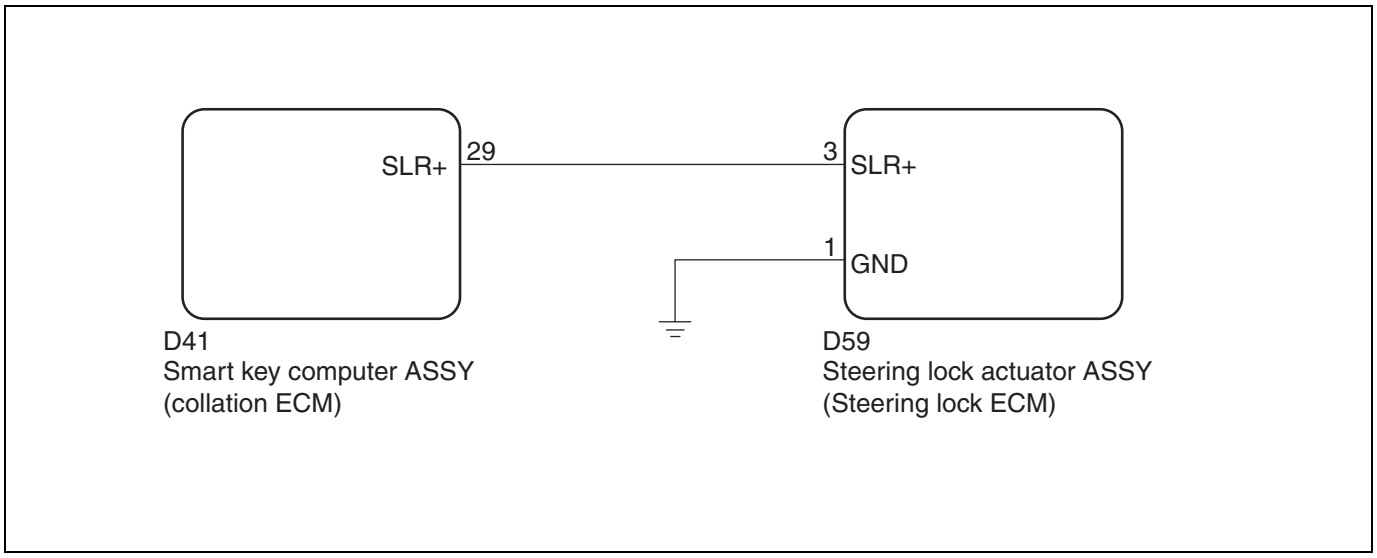

SR

Inspection steps

CAUTION:

- The steering lock system is equipped with functions that use multiplex communication. Firstly, please follow the directions in “How to troubleshoot” and then perform troubleshooting after confirming that there is no malfunction in the communication system.
- After repair is completed, perform a diagnostic code output confirmation and check that there is no further output of diagnostic codes.
- When replacing the steering lock actuator ASSY (Steering lock ECM) or the smart key computer ASSY (Collation ECM), please check the applicable precautions (Refer to TD - 5), and refer to the "Registration manual for immobilizer".
- After turning the ignition switch to OFF, you may have to wait for a while before disconnecting the battery terminals. Check appropriate precautions for battery terminal disconnection before proceeding. (Refer to IN - 6)

1	Inspection of the steering lock actuator ASSY (Steering lock ECM)

(1) Disconnect the steering lock actuator ASSY (Steering lock ECM) connector D59.

(2) Measure the resistance between the terminals.

Resistance

Inspection terminals	Inspection conditions	Standard value
D59-1 (GND) - Chassis ground	Always	Less than 1 Ω

(3) Connect the steering lock actuator ASSY (Steering lock ECM) connector D59.

SR

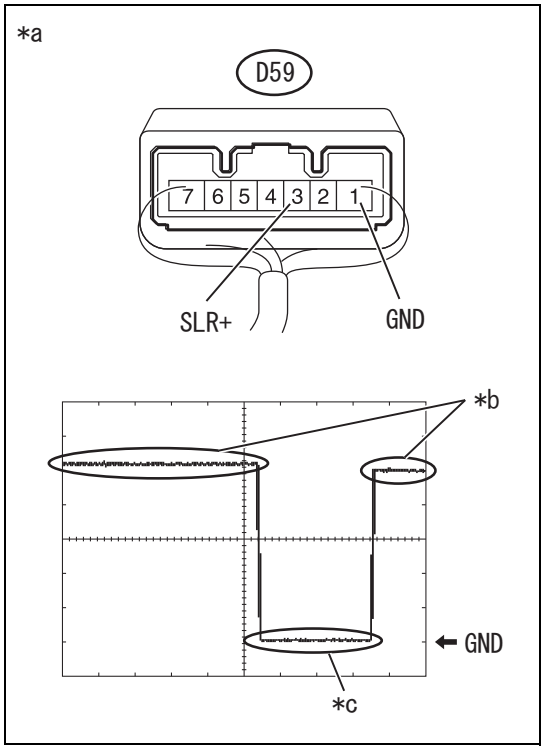

(4) Use an oscilloscope to measure the waveform between the terminals.

Item	Contents
Inspection terminals	D59-3 (SLR+) - D59-1 (GND)
Equipment setting	2 V/DIV, 200 ms/DIV
Inspection conditions	Steering lock actuator motor stopped →Steering lock actuator motor running →Steering lock actuator motor stopped

Captions in illustration

*a	Connector connected (Steering lock actuator ASSY (Steering lock ECM))
*b	Steering lock actuator motor stopped
*c	Steering lock actuator motor running

NOTE:
- Lock motor stopped: No operation
- Lock motor running:
  – Steering unlock:
    When the vehicle is stopped, the electrical key transmitter SUB-ASSY (Electronic key) is being carried and the vehicle is set to ACC ON or IG ON.
  – Steering lock:
    When the vehicle is stopped, any door is opened while the shifter is in the P position (Transmission A/T) and the vehicle is set to IG OFF and ACC OFF.

NG → Go to Step 4.

OK

2	Deletion of diagnostic code and data monitor error information

(1) Clear the diagnostic code using the SSM4. (Refer to SR - 6)

Next

3	Reading diagnostic codes and SSM4 data

(1) Use the SSM4 to confirm that diagnostic code B2782 (Power supply ECM malfunction) is not being output. (Refer to SR - 6)
Criteria: Diagnostic code B2782 is not being output.
(2) Use the SSM4 to perform smart key computer ASSY (Collation ECM) data monitoring.

[SSM4 screen: [Each System] →[Keyless Access(Collation ECM)] →[Data monitor]]

Item name	Description/display range	Normal value	Remarks
[Motor power supply short-circuit abnormal (past)]	Indicates the malfunction (short circuit) history for the signal sent to the steering lock actuator ASSY (Steering lock ECM) signal from the smart key computer ASSY (Collation ECM). Display range: abnormal / normal	Abnormal: Motor power supply short circuit history present OK: No motor power supply short circuit history	This item indicates the history of when there is a circuit malfunction between the smart key computer ASSY (Collation ECM) and the steering lock actuator ASSY (Steering lock ECM).

Result

Result	Go to
• B2782 (Power supply ECM malfunction) is not output. • Motor power supply short circuit history is displayed as "OK".	A
• B2782 (Power supply ECM malfunction) is output. • Motor power supply short circuit history is displayed as "NG".	B

SR

B → Replacement of the steering lock actuator ASSY (Steering lock ECM) (Refer to SR - 59)

A

Return to normal operation (although a diagnosis code was recorded due to poor connector terminal contacts, the connector may have returned to normal operation after being reconnected)

4	Inspect the wiring harness and connector (Smart key computer ASSY (Collation ECM) - Steering lock actuator ASSY (Steering lock ECM)).

(1) Disconnect the steering lock actuator ASSY (Steering lock ECM) connector D59.
(2) Disconnect the smart key computer ASSY (Collation ECM) connector D41.
(3) Confirm that there is no deformation or corrosion on the connector case and terminal.
Criteria: There is no deformation or corrosion on the connector case and terminal.
(4) Measure the resistance between the terminals.

Resistance

Inspection terminals	Inspection conditions	Standard value
D41-29 (SLR+) - D59-3 (SLR+)	Always	Less than 1 Ω
D59-3 (SLR+) - Chassis ground	Always	10 k Ωor more
D41-29 (SLR+) - Chassis ground	Always	10 k Ωor more

NG → Repair or replacement of wiring harness or connector

OK

Replacement of the smart key computer ASSY (Collation ECM)

DTC	B2788	IGN2 input malfunction

Circuit description

This diagnosis code is output when the steering lock actuator ASSY (Steering lock ECM) detects an IG2 power supply malfunction.

As the steering lock actuator ASSY (Steering lock ECM) is not connected to CAN communication, CAN communication with external parts is performed via the LIN communication-connected smart key computer ASSY (Collation ECM).

Diagnostic codes	Detecting conditions	Faulty part	Diagnostic code output check operation
B2788	When a mismatch occurs between the IGN2 input of the steering lock ECM, and both the LIN communication line input and solid line input. (1 trip detection *1)	• GAUGE fuse • Steering lock actuator ASSY (Steering lock ECM) • Wiring harness or connector	No output verification required (constantly detected)

*1: Detects malfunctions when the vehicle is set to IG ON.

Vehicle state and fail safe measures during detection

Vehicle state during detection	Fail safe measures during detection
Steering lock, unlock cannot be performed. This means that the engine cannot be started.	-

Related data monitor and active test

Diagnostic codes	Data monitor	Active test
B2788	-	-

Circuit figure

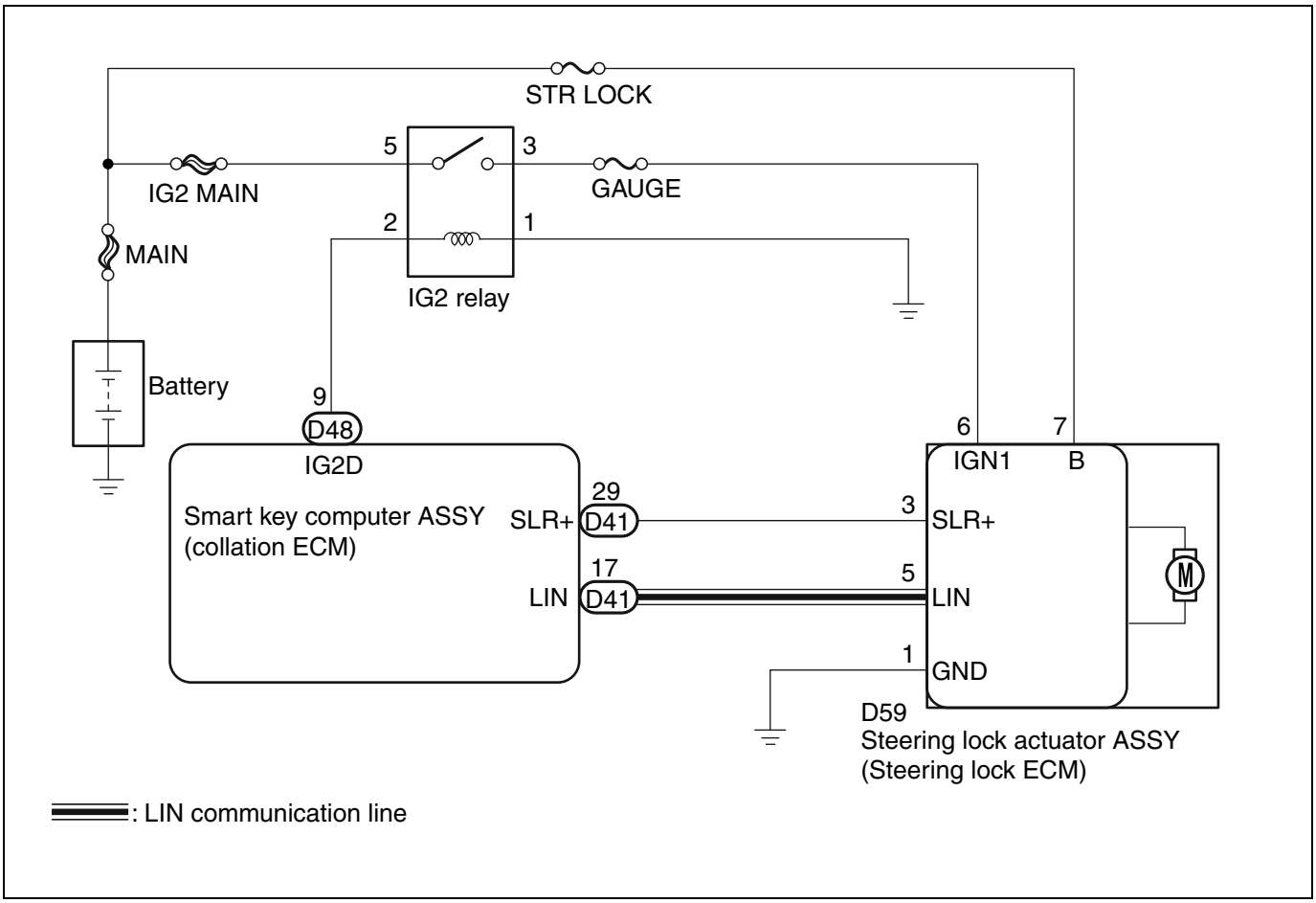

Inspection steps

CAUTION:

- Before performing troubleshooting, check the fuse for this circuit.
- The steering lock system is equipped with functions that use multiplex communication. Firstly, please follow the directions in “How to troubleshoot” and then perform troubleshooting after confirming that there is no malfunction in the communication system.
- After repair is completed, perform a diagnostic code output confirmation and check that there is no further output of diagnostic codes.

- When replacing the steering lock actuator ASSY (Steering lock ECM), please check the applicable precautions (Refer to TD - 5), and refer to the "Registration manual for immobilizer".

1	Inspection of the steering lock actuator ASSY (Steering lock ECM)

(1) Disconnect the steering lock actuator ASSY (Steering lock ECM) connector D59.

(2) Measure the resistance between the terminals.

Resistance

Inspection terminals	Inspection conditions	Standard value
D59-1 (GND) - Chassis ground	Always	Less than 1 Ω

(3) Connect the steering lock actuator ASSY (Steering lock ECM) connector D59.

(4) Measure the voltage between the terminals.

Voltage

Inspection terminals	Inspection conditions	Standard value
D59-6 (IGN1) - D59-1 (GND)	IG ON	11 to 14 V
	IG OFF	Less than 1 V

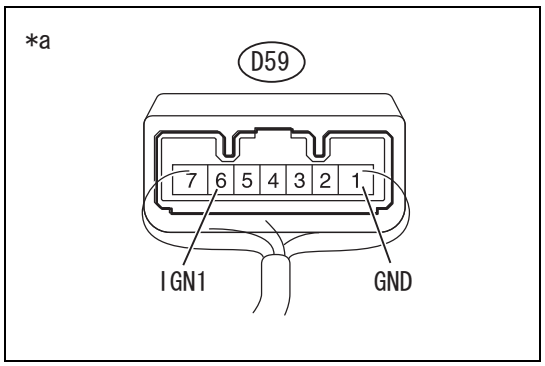

Captions in illustration

*a	Connector connected (Steering lock actuator ASSY (Steering lock ECM))

NG → Check all wiring harnesses and devices connected to the GAUGE fuse (Refer to SR - 8)

OK →

Replacement of the steering lock actuator ASSY (Steering lock ECM) (Refer to SR - 59)

The steering lock cannot be released (cannot start the engine) (without ID code box)

Circuit description

The steering lock actuator ASSY (Steering lock ECM) drives the motor that inserts the lock bar into the steering column to lock the steering wheel.

There may be cases where the steering lock bar becomes stuck in the steering column lock hole, causing the steering lock to become unable to be released. In this case, in the same manner as for conventional plate key vehicles, the lock bar can be worked out of the hole by performing the engine start operation while rocking the steering wheel.

When replacing the smart key computer ASSY (Collation ECM), there may be cases where the steering cannot be unlocked or the engine cannot be started unless registration and initializing operation is carried out. (Refer to the "Registration manual for immobilizer")

Related data monitor and active test

Trouble phenomenon	Data monitor	Active test
The steering lock cannot be released (cannot start the engine)	Check • Steering lock unlock request reception state • L code check	Not applicable

Circuit figure

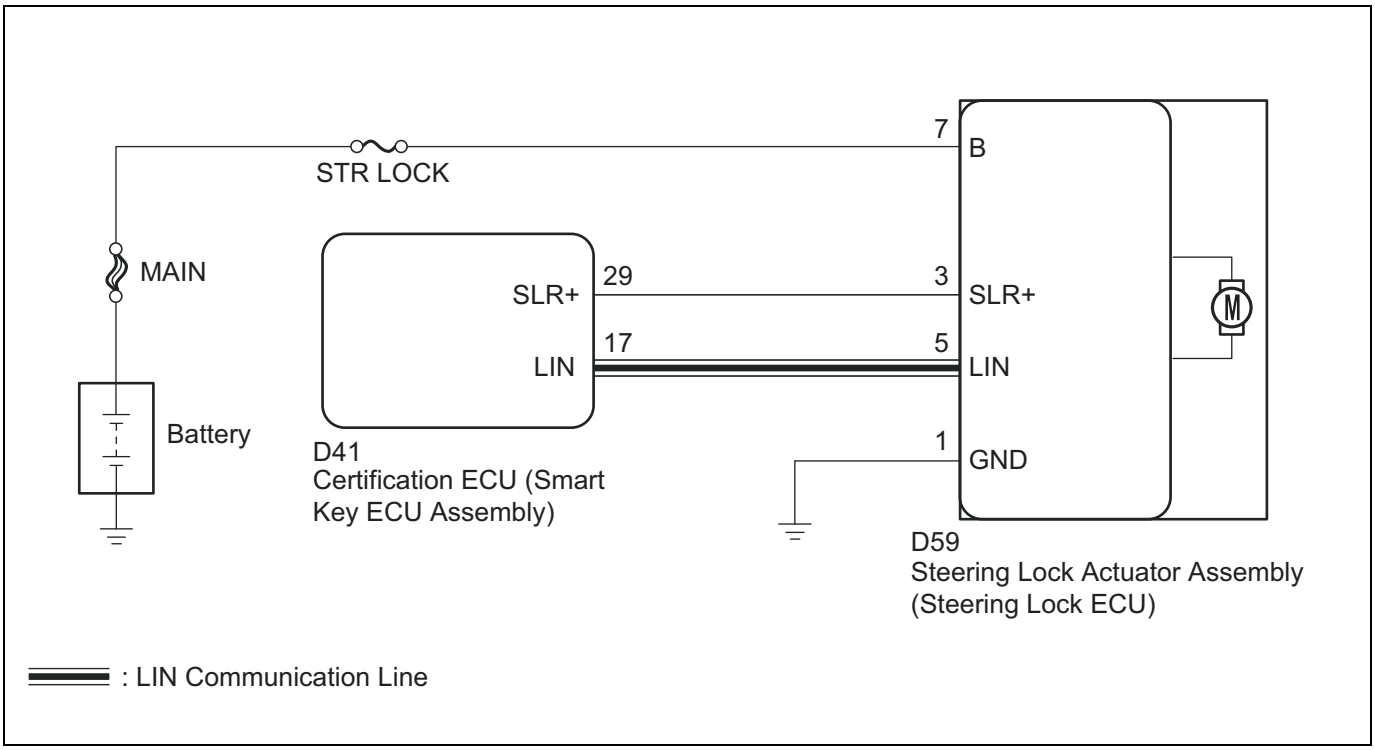

Inspection steps

CAUTION:

- Before performing troubleshooting, check the fuse for this circuit.
- The steering lock system is equipped with functions that use multiplex communication. Firstly, please follow the directions in “How to troubleshoot” and then perform troubleshooting after confirming that there is no malfunction in the communication system.
- After repair is completed, confirm that trouble symptoms do not reoccur.
- Confirm that no diagnostic codes are output. (If diagnostic codes are output, firstly perform a diagnostic code flow chart check.)
- When replacing the smart key computer ASSY (Collation ECM) or the steering lock actuator ASSY (Steering lock ECM), please check the applicable precautions (Refer to TD - 5), and refer to the "Registration manual for immobilizer".
- After replacing the steering lock actuator ASSY (Steering lock ECM), before starting the engine be sure to turn the steering mechanism to the left and right to confirm that the steering is not locked. If the steering is locked, perform the steering lock procedure (open and close any door when the vehicle is in the IG OFF state) and then unlock the steering (press the push button start switch). With the steering being locked, the engine cannot be started.

1	Operation check (IG ON)

(1) Operate the push button start switch to check whether it can be placed in the IG ON state.

Criteria: The ignition can be turned to IG ON.

NG → Progress to "Smart entry & start system (smart entry function)" (Symptom table) (Refer to TD - 156)

OK

2	Reading the SSM4 data (unlock request reception state)

(1) Use the SSM4 to perform smart key computer ASSY (Collation ECM) data monitoring.

[SSM4 screen: [Each System] →[Keyless Access(Collation ECM)] →[Data monitor]]

Item name	Description/display range	Normal value	Remarks
[Steering lock unlock request reception status]	Indicates steering lock unlock request signal reception state. Display range: NG/OK (10 s)	NG: IG ON, ACC ON or engine start operation not performed OK: Within 10 seconds after IG ON, ACC ON or engine start operation	• The engine cannot be started when the unlock request signal cannot be received. • If "OK" is not displayed even if the steering unlock conditions are satisfied, there may be a smart key computer ASSY (Collation ECM) malfunction.

Criteria: An unlock request signal is received within 10 seconds after the engine is started.

NG → Go to Step 7.

OK

3 Inspection of the steering lock actuator ASSY (Steering lock ECM)

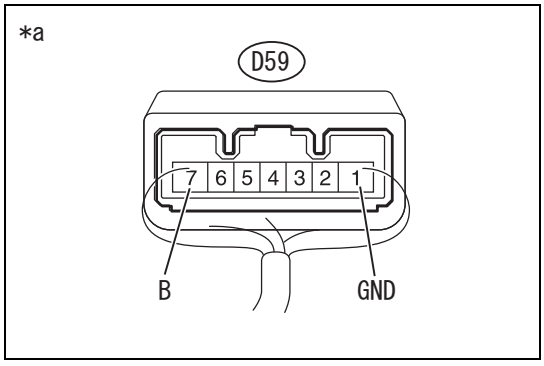

(1) Measure the resistance between the terminals.
Resistance

Inspection terminals	Inspection conditions	Standard value
D59-1 (GND) - Chassis ground	Always	Less than 1 Ω

CAUTION:
If defective, check for ground point looseness.

(2) Measure the voltage between the terminals.
Voltage

Inspection terminals	Inspection conditions	Standard value
D59-7 (B) - Chassis ground	Always	11 to 14 V

Captions in illustration

*a	Connector connected (Steering lock actuator ASSY (Steering lock ECM))

NG → Repair or replacement of wiring harness or connector

OK

4	Inspection of the steering lock actuator ASSY (Steering lock ECM)

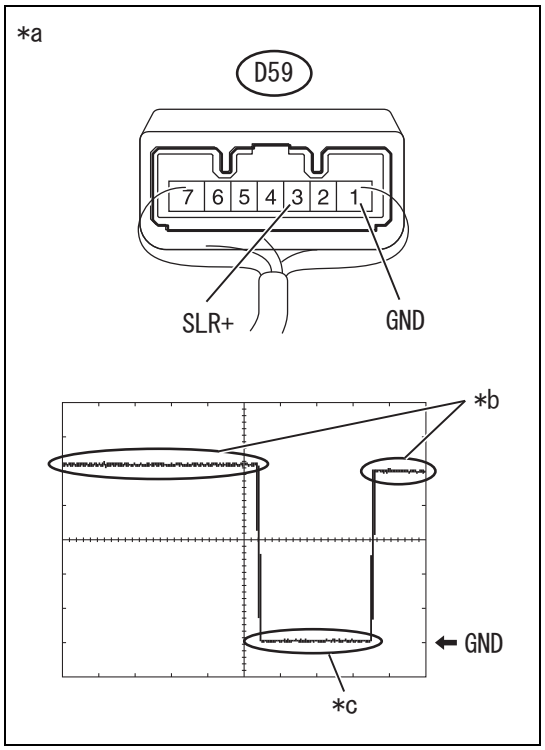

(1) Use an oscilloscope to check the waveform between the terminals.

Item	Contents
Inspection terminals	D59-3 (SLR+) - D59-1 (GND)
Equipment setting	2 V/DIV, 200 ms/DIV
Inspection conditions	Steering lock actuator motor stopped →Steering lock actuator motor running →Steering lock actuator motor stopped

Captions in illustration

*a	Connector connected (Steering lock actuator ASSY (Steering lock ECM))
*b	Steering lock actuator motor stopped
*c	Steering lock actuator motor running

NOTE:
- Lock motor stopped: No operation
- Lock motor running:
  – Steering unlock:
    The electrical key transmitter SUB-ASSY (Electronic key) is being carried and the vehicle is set to ACC ON or IG ON.
  – Steering lock:
    The door is opened while the shifter is in the P position (Transmission A/T) and the vehicle is set to IG OFF and ACC OFF.

NG → Go to Step 9.

OK

5	Reading the SSM4 data (L code check)

(1) Use the SSM4 to perform smart key computer ASSY (Collation ECM) data monitoring.

[SSM4 screen: [Each System] →[Keyless Access(Collation ECM)] →[Data monitor]]

Item name	Description/display range	Normal value	Remarks
[L Code Check]	Indicates the collation results between the smart key computer ASSY (Collation ECM) and the steering lock actuator ASSY (Steering lock ECM). Display range: abnormal / normal	Abnormal: Collation results abnormal OK: Collation results normal	• The smart key computer ASSY (Collation ECM) and the steering lock actuator ASSY (Steering lock ECM) are unable to perform L code registration. • Steering lock cannot be performed. • Steering unlock cannot be performed. (The engine cannot be started.)

Criteria: [L code check] is "OK".

NOTE:
Collation fault causes
- Steering lock actuator ASSY (Steering lock ECM) or smart key computer ASSY (Collation ECM) fault.
- Communication malfunction between both ECMs.

- One of the ECMs was replaced and is not yet registered.
- When replaced with an ECM with a code that has already been written.

NG → Replacement of the steering lock actuator ASSY (Steering lock ECM) (Refer to SR - 59)

OK

SR

6	Replacement of the steering lock actuator ASSY (Steering lock ECM)

(1) Replace the steering lock actuator (Steering lock ECM) with a new part. (Refer to SR - 59)
(2) Perform registration. (Refer to the "Registration manual for immobilizer")
(3) Turn the ignition switch to ON.
(4) Operate the steering wheel to check the steering lock state.
Criteria: The steering lock is released.

NG → Replacement of the smart key computer ASSY (Collation ECM)

OK

Complete (Failure of the steering lock actuator ASSY)

7	Inspection of the smart key computer ASSY (Collation ECM)

(1) Disconnect the smart key computer ASSY (Collation ECM) connector D41.
(2) Disconnect the brake actuator ASSY (skid control computer) connector A5.
(3) Measure the resistance between the terminals.
Resistance

Inspection terminals	Inspection conditions	Standard value
D41-27 (SPD) - A5-2 (SPD)	Always	Less than 1 Ω
D41-27 (SPD) - A5-2 (SPD) - Chassis ground	Always	10 k Ωor more

NG → Repair or replacement of wiring harness or connector

OK

8	Smart key computer ASSY (Collation ECM)

(1) Replace the smart key computer ASSY (Collation ECM) with a new part.
(2) Perform registration. (Refer to the "Registration manual for immobilizer")
(3) Turn the ignition switch to ON.

(4) Use the SSM4 to perform smart key computer ASSY (Collation ECM) data monitoring.

[SSM4 screen: [Each System] →[Keyless Access(Collation ECM)] →[Data monitor]]

Item name	Description/display range	Normal value	Remarks
[Steering lock unlock request reception status]	Indicates steering lock unlock request signal reception state. Display range: NG/OK (10 s)	NG: IG ON, ACC ON or engine start operation not performed OK: Within 10 seconds after IG ON, ACC ON or engine start operation	• The engine cannot be started when the unlock request signal cannot be received. • If "OK" is not displayed even if the steering unlock conditions are satisfied, there may be a smart key computer ASSY (Collation ECM) malfunction.

Criteria: An unlock request signal is received within 10 seconds after the engine is started.

NG → Replacement of the steering lock actuator ASSY (Steering lock ECM) (Refer to SR - 59)

OK

Complete (Smart key computer ASSY (Collation ECM) fault)

9	Inspect the wiring harness and connector (Smart key computer ASSY (Collation ECM) - Steering lock actuator ASSY (Steering lock ECM)).

(1) Disconnect the steering lock actuator (Steering lock ECM) connector D59.
(2) Disconnect the smart key computer ASSY (Collation ECM) connector D41.
(3) Confirm that there is no deformation or corrosion on the connector case and terminal.
Criteria: There is no deformation or corrosion on the connector case and terminal.
(4) Measure the resistance between the terminals.
Resistance

Inspection terminals	Inspection conditions	Standard value
D41-29 (SLR+) - D59-3(SLR+)	Always	Less than 1 Ω
D59-3 (SLR+) - Chassis ground	Always	10 k Ωor more

NG → Repair or replacement of wiring harness or connector

OK

10	Replacement of the steering lock actuator ASSY (Steering lock ECM)

(1) Replace the steering lock actuator (Steering lock ECM) with a new part. (Refer to SR - 59)
(2) Perform registration. (Refer to the "Registration manual for immobilizer")

(3) Turn the ignition switch to ON.
(4) Operate the steering wheel to check the steering lock state.
Criteria: The steering lock is released.

NG → Replacement of the smart key computer ASSY (Collation ECM)

OK

Complete (Failure of the steering lock actuator ASSY)

The steering lock does not operate (without ID code box)

Circuit description

The steering lock actuator ASSY (Steering lock ECM) drives the lock motor that inserts the lock bar into the steering column to lock the steering wheel.

During steering lock operation, there may be cases where the lock bar does not fit into the steering column lock hole, causing the steering to become unable to be locked. In this case, in the same manner as for conventional plate key vehicles, the steering can be locked after slightly turning the steering wheel and changing the steering column lock hole position.

Related data monitor and system operation check mode

Trouble phenomenon	Data monitor	Active test
The steering lock does not operate	Check • Lock request reception state • L code check Main body • The driver's door courtesy switch	Not applicable

Circuit figure

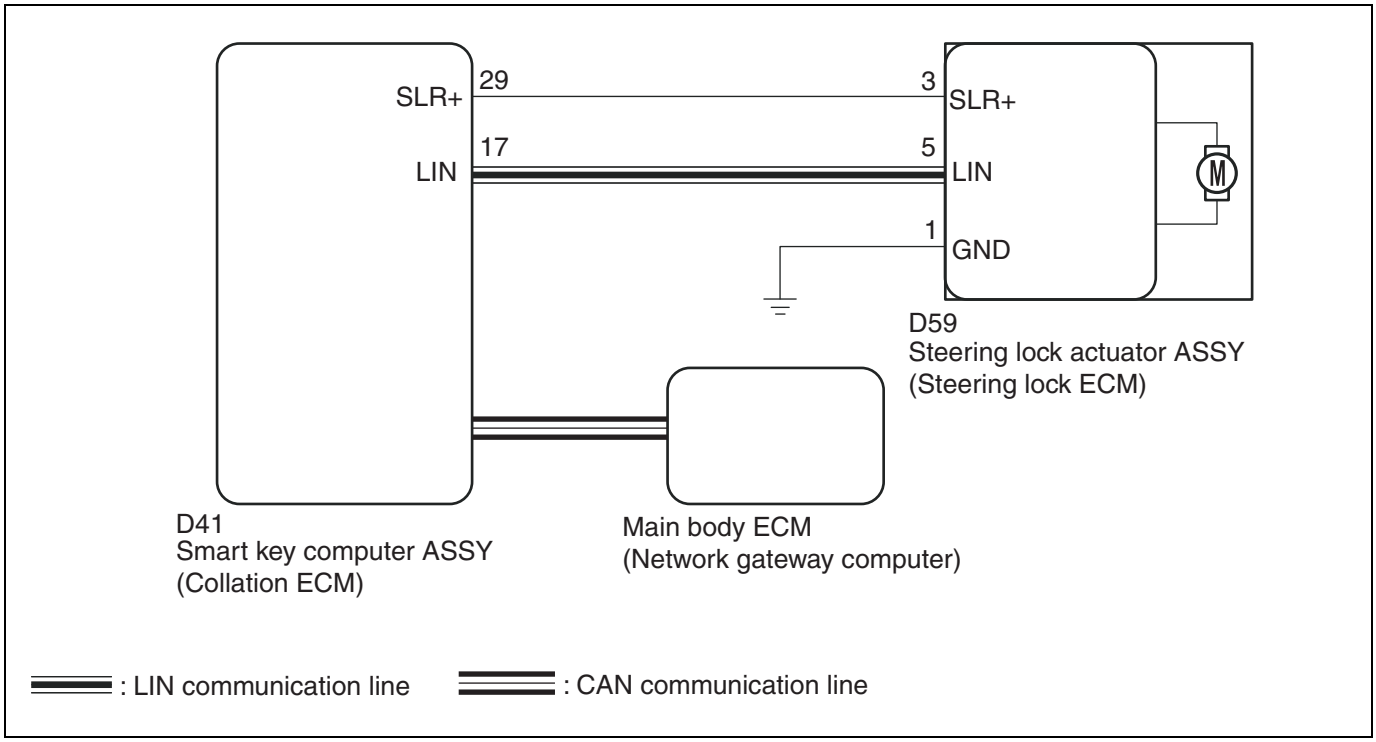

Inspection steps

CAUTION:

- The steering lock system is equipped with functions that use multiplex communication. Firstly, please follow the directions in “How to troubleshoot” and then perform troubleshooting after confirming that there is no malfunction in the communication system.
- After repair is completed, confirm that trouble symptoms do not reoccur.
- Confirm that no diagnostic codes are output. (If diagnostic codes are output, firstly perform a diagnostic code flow chart check.)
- When replacing the smart key computer ASSY (Collation ECM) or the steering lock actuator ASSY (Steering lock ECM), please check the applicable precautions (Refer to TD - 5), and refer to the "Registration manual for immobilizer".
- After replacing the steering lock actuator ASSY (Steering lock ECM), before starting the engine be sure to turn the steering mechanism to the left and right to confirm that the steering is not locked. If the steering is locked, perform the steering lock procedure (open and close any door when the vehicle is in the IG OFF state) and then unlock the steering (press the push button start switch). With the steering being locked, the engine cannot be started.

SR

1	Reading the SSM4 data (unlock request reception state)

(1) Use the SSM4 to perform smart key computer ASSY (Collation ECM) data monitoring.

[SSM4 screen: [Each System] →[Keyless Access(Collation ECM)] →[Data monitor]]

Item name	Description/display range	Normal value	Remarks
[Steering lock lock request reception status]	Indicates the lock request signal reception state. Display range: OK (10s)/NG	OK: When a lock request is received within 10 seconds after any one of the doors is opened while the shifter is in the P position (Transmission A/T) and the vehicle ignition is turned to IG OFF. NG: Other than above	If "OK" is not displayed even if the steering lock conditions are satisfied, there may be a smart key computer ASSY (Collation ECM) malfunction.

Criteria: After changing from IG ON to IG OFF, a lock request signal is received within 10 seconds after any of the doors are opened.

NG → Go to Step 7.

OK

2	Inspection of the steering lock actuator ASSY (Steering lock ECM)

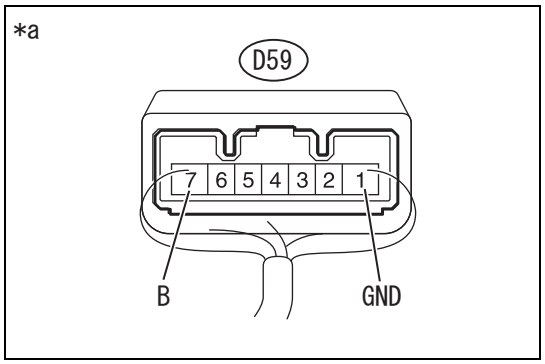

(1) Measure the resistance between the terminals.
Resistance

Inspection terminals	Inspection conditions	Standard value
D59-1 (GND) - Chassis ground	Always	Less than 1 Ω

CAUTION:
If defective, check for ground point looseness.

(2) Measure the voltage between the terminals.
Voltage

Inspection terminals	Inspection conditions	Standard value
D59-7 (B) - Chassis ground	Always	11 to 14 V

Captions in illustration

*a	Connector connected (Steering lock actuator ASSY (Steering lock ECM))

NG → Repair or replacement of wiring harness or connector

OK

3	Inspection of the steering lock actuator ASSY (Steering lock ECM)

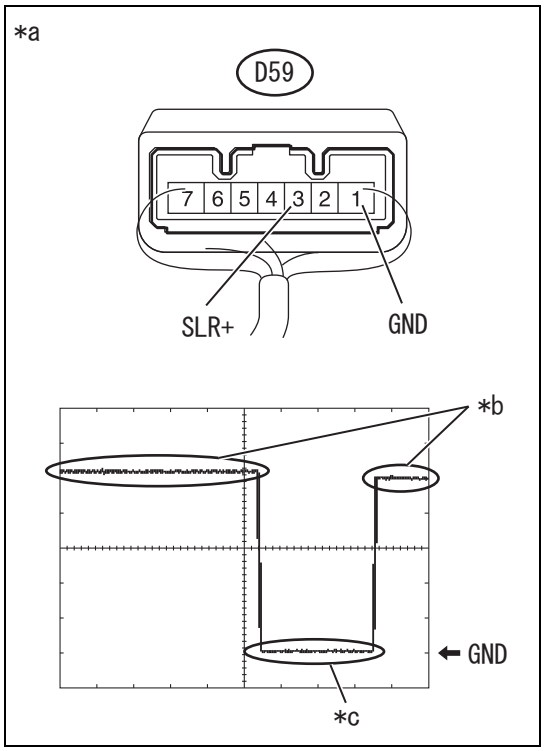

(1) Use an oscilloscope to check the waveform between the terminals.

Item	Contents
Inspection terminals	D59-3 (SLR+) - D59-1 (GND)
Equipment setting	2 V/DIV, 200 ms/DIV
Inspection conditions	Steering lock actuator motor stopped →Steering lock actuator motor running →Steering lock actuator motor stopped

Captions in illustration

*a	Connector connected (Steering lock actuator ASSY (Steering lock ECM))
*b	Steering lock actuator motor stopped
*c	Steering lock actuator motor running

NOTE:
- Lock motor stopped: No operation
- Lock motor running:
  – Steering unlock:
    The electrical key transmitter SUB-ASSY (Electronic key) is being carried and the vehicle is set to ACC ON or IG ON.
  – Steering lock:
    The door is opened while the shifter is in the P position (Transmission A/T) and the vehicle is set to IG OFF and ACC OFF.

NG → Go to Step 9.

OK

4	Reading the SSM4 data (L code check)

(1) Use the SSM4 to perform smart key computer ASSY (Collation ECM) data monitoring.

[SSM4 screen: [Each System] →[Keyless Access(Collation ECM)] →[Data monitor]]

Item name	Description/display range	Normal value	Remarks
[L Code Check]	Indicates the collation results between the smart key computer ASSY (Collation ECM) and the steering lock actuator ASSY (Steering lock ECM). Display range: abnormal / normal	Abnormal: Collation results abnormal OK: Collation results normal	• The smart key computer ASSY (Collation ECM) and the steering lock actuator ASSY (Steering lock ECM) are unable to perform L code registration. • Steering lock cannot be performed. • Steering unlock cannot be performed. (The engine cannot be started.)

Criteria: [L code check] is "OK".

SR

NOTE:
Collation fault causes
- Steering lock actuator ASSY (Steering lock ECM) or smart key computer ASSY (Collation ECM) fault.
- Communication malfunction between both ECMs.
- One of the ECMs was replaced and is not yet registered.
- When replaced with an ECM with a code that has already been written.

NG → Replacement of the steering lock actuator ASSY (Steering lock ECM) (Refer to SR - 59)

OK

5	Replacement of the steering lock actuator ASSY (Steering lock ECM)

(1) Replace the steering lock actuator (Steering lock ECM) with a new part. (Refer to SR - 59)
(2) Perform registration. (Refer to the "Registration manual for immobilizer")
(3) Turn the ignition switch to ON.
(4) Operate the steering wheel to check the steering lock state.
Criteria: The steering lock is released.

NG → Replacement of the smart key computer ASSY (Collation ECM)

OK

Complete (Failure of the steering lock actuator ASSY)

6	Reading the SSM4 data (driver's door courtesy switch)

(1) Use the SSM4 to perform main body ECM (network gateway computer) data monitoring.

[SSM4 screen: [Each System] →[Body Control] →[Data monitor]]

Item name	Description/display range	Normal value	Remarks
The driver's door courtesy switch	State of the driver's door courtesy light switch. Display range: Closed/Open	[Close]: Driver's door is closed. [Open]: Driver's door is opened.	-

Criteria: The data monitoring trend changes as the driver's door is opened and closed.

NG → Carrying out main body ECM fault diagnosis (Refer to TD - 40)

OK

7	Inspection of the smart key computer ASSY (Collation ECM)

(1) Disconnect the smart key computer ASSY (Collation ECM) connector D41.

(2) Disconnect the brake actuator ASSY (skid control computer) connector A5.
(3) Measure the resistance between the terminals.
Resistance

Inspection terminals	Inspection conditions	Standard value
D41-27 (SPD) - A5-2 (SPD)	Always	Less than 1 Ω
D41-27 (SPD) - A5-2 (SPD) - Chassis ground	Always	10 k Ωor more

SR

NG → Repair or replacement of wiring harness or connector

OK

8	Smart key computer ASSY (Collation ECM)

(1) Replace the smart key computer ASSY (Collation ECM) with a new part.
(2) Perform registration. (Refer to the "Registration manual for immobilizer")
(3) Turn the ignition switch to ON.
(4) Use the SSM4 to perform smart key computer ASSY (Collation ECM) data monitoring.

[SSM4 screen: [Each System] →[Keyless Access(Collation ECM)] →[Data monitor]]

Item name	Description/display range	Normal value	Remarks
[Steering lock lock request reception status]	Indicates the lock request signal reception state. Display range: NG/OK (10 s)	OK: When a lock request is received within 10 seconds after any one of the doors is opened while the shifter is in the P position (Transmission A/T) and the vehicle ignition is turned to IG OFF. NG: Other than above	If "OK" is not displayed even if the steering lock conditions are satisfied, there may be a smart key computer ASSY (Collation ECM) malfunction.

Criteria: After changing from IG ON to IG OFF, a lock request signal is received within 10 seconds after any of the doors are opened.

NG → Replacement of the steering lock actuator ASSY (Steering lock ECM) (Refer to SR - 59)

OK

Complete (Smart key computer ASSY (Collation ECM) fault)

9	Inspect the wiring harness and connector (Smart key computer ASSY (Collation ECM) - Steering lock actuator ASSY (Steering lock ECM)).

(1) Disconnect the steering lock actuator (Steering lock ECM) connector D59.
(2) Disconnect the smart key computer ASSY (Collation ECM) connector D41.

(3) Confirm that there is no deformation or corrosion on the connector case and terminal.
Criteria: There is no deformation or corrosion on the connector case and terminal.
(4) Measure the resistance between the terminals.
Resistance

Inspection terminals	Inspection conditions	Standard value
D41-29 (SLR+) - D59-3(SLR+)	Always	Less than 1 Ω
D59-3 (SLR+) - Chassis ground	Always	10 k Ωor more

NG → Repair or replacement of wiring harness or connector

OK

10	Replacement of the steering lock actuator ASSY (Steering lock ECM)

(1) Replace the steering lock actuator ASSY (Steering lock ECM) with a new part. (Refer to SR - 60)
(2) Perform registration. (Refer to the "Registration manual for immobilizer")
(3) Turn the ignition switch to ON.
(4) Operate the steering wheel to check the steering lock state.
Criteria: The steering lock is released.

NG → Replacement of the smart key computer ASSY (Collation ECM)

OK

Complete (Failure of the steering lock actuator ASSY)

The steering lock cannot be released (cannot start the engine) (with ID code box)

Circuit description
The steering lock actuator ASSY (Steering lock ECM) drives the motor that inserts the lock bar into the steering column to lock the steering wheel.
There may be cases where the steering lock bar becomes stuck in the steering column lock hole, causing the steering lock to become unable to be released. In this case, in the same manner as for conventional plate key vehicles, the lock bar can be worked out of the hole by performing the engine start operation while rocking the steering wheel.
When replacing the smart key computer ASSY (Collation ECM), there may be cases where the steering cannot be unlocked or the engine cannot be started unless registration and initializing operation is carried out. (Refer to the "Registration manual for immobilizer")
Related data monitor and active test

Trouble phenomenon	Data monitor	Active test
The steering lock cannot be released (cannot start the engine)	Check • Steering lock unlock request reception state • L code check	Not applicable

Circuit figure

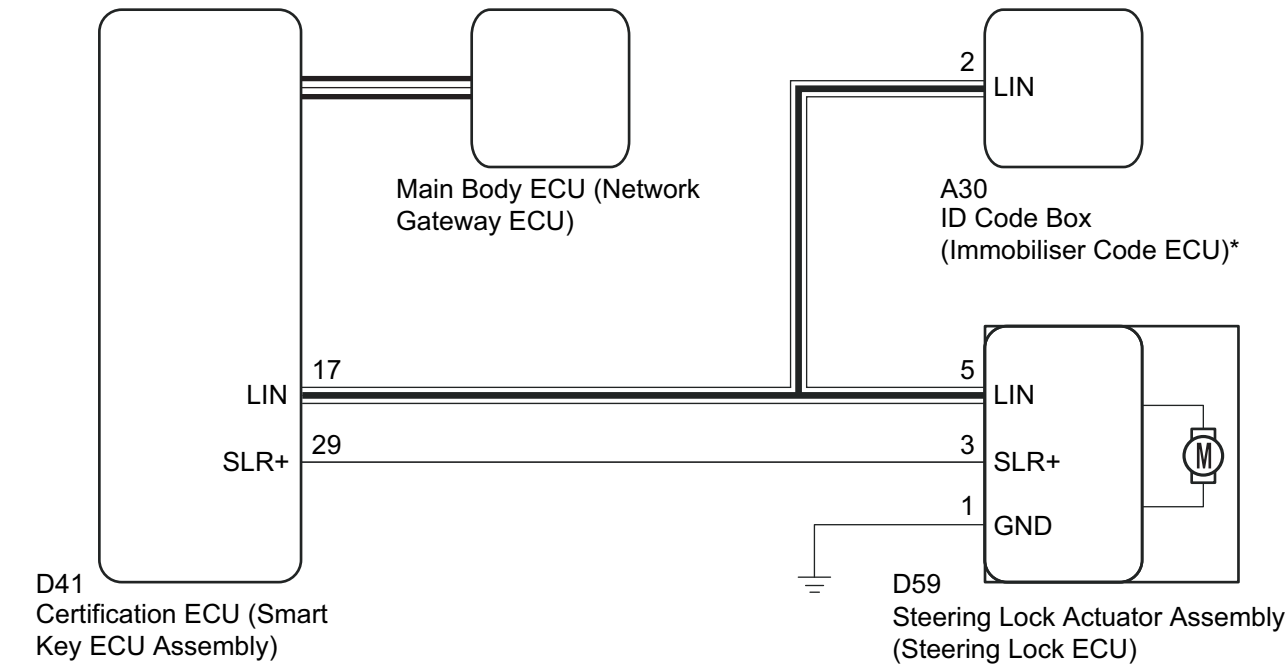

*: w/ ID Code Box

: LIN Communication Line : CAN Communication Line

Inspection steps

CAUTION:

- Before performing troubleshooting, check the fuse for this circuit.
- The steering lock system is equipped with functions that use multiplex communication. Firstly, please follow the directions in “How to troubleshoot” and then perform troubleshooting after confirming that there is no malfunction in the communication system.
- After repair is completed, confirm that trouble symptoms do not reoccur.
- Confirm that no diagnostic codes are output. (If diagnostic codes are output, firstly perform a diagnostic code flow chart check.)
- When replacing the smart key computer ASSY (Collation ECM), the steering lock actuator ASSY (Steering lock ECM) or the ID code box (with ID code box), please check the applicable precautions (Refer to TD - 5), and refer to the "Registration manual for immobilizer".
- After replacing the steering lock actuator ASSY (Steering lock ECM), before starting the engine be sure to turn the steering mechanism to the left and right to confirm that the steering is not locked. If the steering is locked, perform the steering lock procedure (open and close any door when the vehicle is in the IG OFF state) and then unlock the steering (press the push button start switch). With the steering being locked, the engine cannot be started.

1	Operation check (IG ON)

(1) Operate the push button start switch to check whether it can be placed in the IG ON state.

Criteria: The ignition can be turned to IG ON.

NG → Progress to "Smart entry & start system (smart entry function)" (Symptom table) (Refer to TD - 156)

OK

2	Reading the SSM4 data (unlock request reception state)

(1) Use the SSM4 to perform smart key computer ASSY (Collation ECM) data monitoring.

SR

SSM4 screen: [Each System] →[Keyless Access(Collation ECM)] →[Data monitor]

Item name	Description/display range	Normal value	Remarks
[Steering lock unlock request reception status]	Indicates steering lock unlock request signal reception state. Display range: NG/OK (10 s)	NG: IG ON, ACC ON or engine start operation not performed OK: Within 10 seconds after IG ON, ACC ON or engine start operation	• The engine cannot be started when the unlock request signal cannot be received. • If "OK" is not displayed even if the steering unlock conditions are satisfied, there may be a smart key computer ASSY (Collation ECM) malfunction.

Criteria: An unlock request signal is received within 10 seconds after the engine is started.

NG → Go to Step 8.

OK

3	Inspection of the steering lock actuator ASSY (Steering lock ECM)

*a

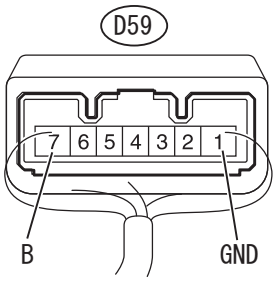

(1) Measure the resistance between the terminals.
Resistance

Inspection terminals	Inspection conditions	Standard value
D59-1 (GND) - Chassis ground	Always	Less than 1 Ω

CAUTION:
If defective, check for ground point looseness.

(2) Measure the voltage between the terminals.
Voltage

Inspection terminals	Inspection conditions	Standard value
D59-7 (B) - Chassis ground	Always	11 to 14 V

Captions in illustration

*a	Connector connected (Steering lock actuator ASSY (Steering lock ECM))

NG → Repair or replacement of wiring harness or connector

OK

4	Inspection of the steering lock actuator ASSY (Steering lock ECM)

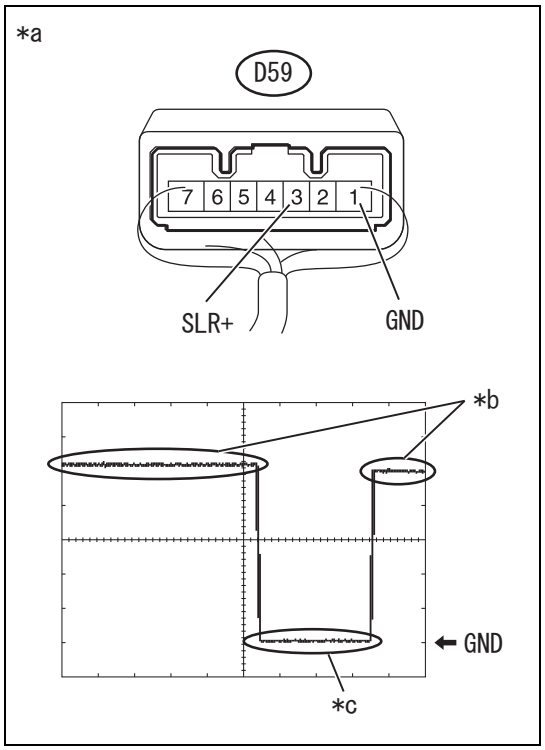

(1) Use an oscilloscope to check the waveform between the terminals.

Item	Contents
Inspection terminals	D59-3 (SLR+) - D59-1 (GND)
Equipment setting	2 V/DIV, 200 ms/DIV
Inspection conditions	Steering lock actuator motor stopped →Steering lock actuator motor running →Steering lock actuator motor stopped

Captions in illustration

*a	Connector connected (Steering lock actuator ASSY (Steering lock ECM))
*b	Steering lock actuator motor stopped
*c	Steering lock actuator motor running

NOTE:
- Lock motor stopped: No operation
- Lock motor running:
  – Steering unlock:
    The electrical key transmitter SUB-ASSY (Electronic key) is being carried and the vehicle is set to ACC ON or IG ON.
  – Steering lock:
    The door is opened while the shifter is in the P position (Transmission A/T) and the vehicle is set to IG OFF and ACC OFF.

NG → Go to Step 10.

OK

5	Reading the SSM4 data (S code check)

(1) Use the SSM4 to perform smart key computer ASSY (Collation ECM) data monitoring.

[SSM4 screen: [Each System] →[Keyless Access(Collation ECM)] →[Data monitor]]

Item name	Description/display range	Normal value	Remarks
[S Code Check]	Verification results between the collation ECM (smart key ECM ASSY) and the ID code box (immobilizer code ECM)/ OK or NG.	OK: Confirmation results normal NG: Confirmation results abnormal Confirmation results abnormal	If abnormal: • The ID code box (immobilizer code ECM) or the collation ECM (smart key ECM ASSY) ID codes are not registered, or they are malfunctioning. • The steering is not locked. • The steering is not unlocked. (The engine cannot be started.)

Criteria: [S code check] is "OK".

NG → Go to Step 12.

OK

6	Reading the SSM4 data (L code check)

(1) Use the SSM4 to perform smart key computer ASSY (Collation ECM) data monitoring.

SR

[SSM4 screen: [Each System] →[Keyless Access(Collation ECM)] →[Data monitor]]

Item name	Description/display range	Normal value	Remarks
[L Code Check]	Display range indicating the collation results between the smart key computer ASSY (Collation ECM) and the steering lock actuator ASSY (Steering lock ECM). abnormal / normal	Abnormal: Collation results abnormal: Collation results normal	• The smart key computer ASSY (Collation ECM) and the steering lock actuator ASSY (Steering lock ECM) are unable to perform L code registration. • Steering lock cannot be performed. • Steering unlock cannot be performed. (The engine cannot be started).

Criteria: [L code check] is "OK".

NOTE:

Collation fault causes:

- Steering lock actuator ASSY (Steering lock ECM) or smart key computer ASSY (Collation ECM) fault.
- Communication malfunction between both ECMs.
- One of the ECMs was replaced and is not yet registered.
- When replaced with an ECM with a code that has already been written.

NG → Go to Step 13.

OK

7	Replacement of the steering lock actuator ASSY (Steering lock ECM)

(1) Replace the steering lock actuator (Steering lock ECM) with a new part. (Refer to SR - 59)
(2) Perform registration. (Registration manual for immobilizer)
(3) Turn the ignition switch to ON.
(4) Operate the steering wheel to check the steering lock state.
Criteria: The steering lock is released.

NG → Go to Step 14.

OK

Complete (Failure of the steering lock actuator ASSY)

8	Inspection of the smart key computer ASSY (Collation ECM)

(1) Disconnect the smart key computer ASSY (Collation ECM) connector D41.
(2) Disconnect the brake actuator ASSY (skid control computer) connector A5.

(3) Measure the resistance between the terminals.

Resistance

Inspection terminals	Inspection conditions	Standard value
D41-27 (SPD) - A5-2 (SPD)	Always	Less than 1 Ω
D41-27 (SPD) - A5-2 (SPD) - Chassis ground	Always	10 k Ωor more

SR

NG → Repair or replacement of wiring harness or connector

OK

9	Smart key computer ASSY (Collation ECM)

(1) Replace the smart key computer ASSY (Collation ECM) with a new part.
(2) Carry out the registration settings. (Refer to the "Registration manual for immobilizer")
(3) Turn the ignition switch to ON.
(4) Use the SSM4 to perform smart key computer ASSY (Collation ECM) data monitoring.

[SSM4 screen: [Each System] →[Keyless Access(Collation ECM)] →[Data monitor]]

Item name	Description/display range	Normal value	Remarks
[Steering lock unlock request reception status]	Indicates steering lock unlock request signal reception state. Display range: NG/OK (10 s)	NG: Signal reception without IG ON, ACC ON, or engine start operation (10s): Within 10 seconds after IG ON, ACC ON or engine start operation	• The engine cannot be started when the unlock request signal cannot be received. • If "OK" is not displayed even if the steering unlock conditions are satisfied, there may be a smart key computer ASSY (Collation ECM) malfunction.

Criteria: An unlock request signal is received within 10 seconds after the engine is started.

NG → Replace the ID code box (immobilizer ECM)

OK

Complete (Smart key computer ASSY (Collation ECM) fault)

10	Inspect the wiring harness and connector (Smart key computer ASSY (Collation ECM) - Steering lock actuator ASSY (Steering lock ECM)).

(1) Disconnect the steering lock actuator (Steering lock ECM) connector D59.
(2) Disconnect the smart key computer ASSY (Collation ECM) connector D41.
(3) Confirm that there is no deformation or corrosion on the connector case and terminal.

SR

Criteria: There is no deformation or corrosion on the connector case and terminal.

(4) Measure the resistance between the terminals.

Resistance

Inspection terminals	Inspection conditions	Standard value
D41-29 (SLR+) -D59-3 (SLR+)	Always	Less than 1 Ω
D59-3 (SLR+) - Chassis ground	Always	10 k Ωor more

NG → Repair or replacement of wiring harness or connector

OK

11	Replacement of the steering lock actuator ASSY (Steering lock ECM)

(1) Replace the steering lock actuator (Steering lock ECM) with a new part. (Refer to SR - 59)
(2) Perform registration. (Refer to the "Registration manual for immobilizer")
(3) Turn the ignition switch to ON.
(4) Operate the steering wheel to check the steering lock state.
Criteria: The steering lock is released.

NG → Replacement of the smart key computer ASSY (Collation ECM)

OK

Complete (Failure of the steering lock actuator ASSY)

12	Replace the ID code box (immobilizer ECM)

(1) Replace the ID code box (immobilizer ECM) with a new part.
(2) Perform registration. (Refer to the "Registration manual for immobilizer").
(3) Turn the ignition switch to ON.
(4) Use the SSM4 to perform smart key computer ASSY (Collation ECM) data monitoring.

[SSM4 screen: [Each System] →[Keyless Access(Collation ECM)] →[Data monitor]]

Item name	Description/display range	Normal value	Remarks
[S Code Check]	Verification results between the collation ECM (smart key ECM ASSY) and the ID code box (immobilizer code ECM)/ OK or NG.	OK: Confirmation results normal NG: Confirmation results abnormal Confirmation results abnormal	If abnormal: • The ID code box (immobilizer code ECM) or the collation ECM (smart key ECM ASSY) ID codes are not registered, or they are malfunctioning. • The steering is not locked. • The steering is not unlocked. (The engine cannot be started.)

Criteria: [S code check] is "OK".

NG → Replacement of the smart key computer ASSY (Collation ECM)

OK

Complete (ID code box (immobilizer ECM) fault)

SR

13	Replace the ID code box (immobilizer ECM)

(1) Replace the ID code box (immobilizer ECM) with a new part.
(2) Perform registration. (Refer to the "Registration manual for immobilizer").
(3) Turn the ignition switch to ON.
(4) Use the SSM4 to perform smart key computer ASSY (Collation ECM) data monitoring.

[SSM4 screen: [Each System] →[Keyless Access(Collation ECM)] →[Data monitor]]

Item name	Description/display range	Normal value	Remarks
[L Code Check]	Display range indicating the collation results between the smart key computer ASSY (Collation ECM) and the steering lock actuator ASSY (Steering lock ECM). abnormal / normal	Abnormal: Collation results abnormal: Collation results normal	• The smart key computer ASSY (Collation ECM) and the steering lock actuator ASSY (Steering lock ECM) are unable to perform L code registration. • Steering lock cannot be performed. • Steering unlock cannot be performed. (The engine cannot be started).

Criteria: [L code check] is "OK".

NG → Replacement of the steering lock actuator ASSY (Steering lock ECM) (Refer to SR - 59)

OK

Complete (ID code box (immobilizer ECM) fault)

14	Replacement of the smart key computer ASSY (Collation ECM)

(1) Replace the smart key computer ASSY (Collation ECM) with a new part.
(2) Perform registration. (Refer to the "Registration manual for immobilizer").
(3) Turn the ignition switch to ON.
(4) Use the SSM4 to perform smart key computer ASSY (Collation ECM) data monitoring.

[SSM4 screen: [Each System] →[Keyless Access(Collation ECM)] →[Data monitor]]

Item name	Description/display range	Normal value	Remarks
[L Code Check]	Display range indicating the collation results between the smart key computer ASSY (Collation ECM) and the steering lock actuator ASSY (Steering lock ECM). abnormal / normal	Abnormal: Collation results abnormal: Collation results normal	• The smart key computer ASSY (Collation ECM) and the steering lock actuator ASSY (Steering lock ECM) are unable to perform L code registration. • Steering lock cannot be performed. • Steering unlock cannot be performed. (The engine cannot be started).

SR

Criteria: [L code check] is "OK".

NG → Replace the ID code box (immobilizer ECM)

OK

Complete (Smart key computer ASSY (Collation ECM) fault)

The steering lock does not operate (with ID code box)

Circuit description

The steering lock actuator ASSY (Steering lock ECM) drives the lock motor that inserts the lock bar into the steering column to lock the steering wheel.

During steering lock operation, there may be cases where the lock bar does not fit into the steering column lock hole, causing the steering to become unable to be locked. In this case, in the same manner as for conventional plate key vehicles, the steering can be locked after slightly turning the steering wheel and changing the steering column lock hole position.

Related data monitor and system operation check mode

Trouble phenomenon	Data monitor	Active test
The steering lock does not operate	Check • Lock request reception state • L code check Main body • The driver's door courtesy switch	Not applicable

Circuit figure

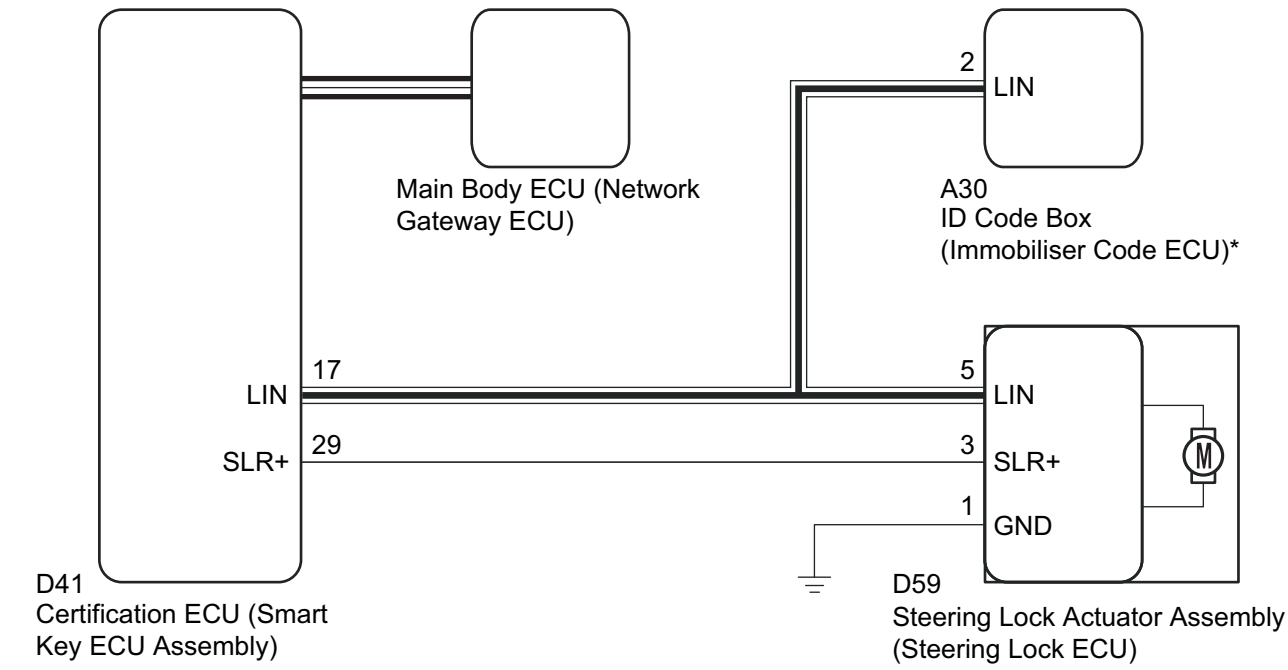

*: w/ ID Code Box

: LIN Communication Line : CAN Communication Line

Inspection steps

CAUTION:

- The steering lock system is equipped with functions that use multiplex communication. Firstly, please follow the directions in “How to troubleshoot” and then perform troubleshooting after confirming that there is no malfunction in the communication system.
- After repair is completed, confirm that trouble symptoms do not reoccur.
- Confirm that no diagnostic codes are output. (If diagnostic codes are output, firstly perform a diagnostic code flow chart check.)
- When replacing the smart key computer ASSY (Collation ECM), the steering lock actuator ASSY (Steering lock ECM) or the ID code box (with ID code box), please check the applicable precautions (Refer to TD - 5), and refer to the "Registration manual for immobilizer".
- After replacing the steering lock actuator ASSY (Steering lock ECM), before starting the engine be sure to turn the steering mechanism to the left and right to confirm that the steering is not locked. If the steering is locked, perform the steering lock procedure (open and close any door when the vehicle is in the IG OFF state) and then unlock the steering (press the push button start switch). With the steering being locked, the engine cannot be started.

1	Reading the SSM4 data (unlock request reception state)

(1) Use the SSM4 to perform smart key computer ASSY (Collation ECM) data monitoring.

[SSM4 screen: [Each System] →[Keyless Access(Collation ECM)] →[Data monitor]]

Item name	Description/display range	Normal value	Remarks
[Steering lock lock request reception status]	Indicates the lock request signal reception state. Display range: OK (10s)/NG	OK: When a lock request is received within 10 seconds after any one of the doors is opened while the shifter is in the P position (Transmission A/T) and the vehicle ignition is turned to IG OFF. NG: Other than above	If "OK" is not displayed even if the steering lock conditions are satisfied, there may be a smart key computer ASSY (Collation ECM) malfunction.

Criteria: After changing from IG ON to IG OFF, a lock request signal is received within 10 seconds after any of the doors are opened.

NG → Go to Step 7.

OK

2	Inspection of the steering lock actuator ASSY (Steering lock ECM)

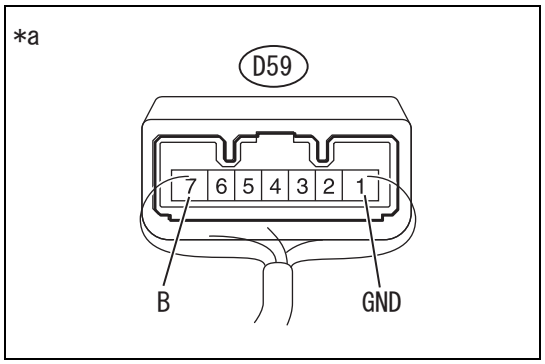

(1) Measure the resistance between the terminals.
Resistance

Inspection terminals	Inspection conditions	Standard value
D59-1 (GND) - Chassis ground	Always	Less than 1 Ω

CAUTION:
If defective, check for ground point looseness.

(2) Measure the voltage between the terminals.
Voltage

Inspection terminals	Inspection conditions	Standard value
D59-7 (B) - Chassis ground	Always	11 to 14 V

Captions in illustration

*a	Connector connected (Steering lock actuator ASSY (Steering lock ECM))

NG → Repair or replacement of wiring harness or connector

OK

3	Inspection of the steering lock actuator ASSY (Steering lock ECM)

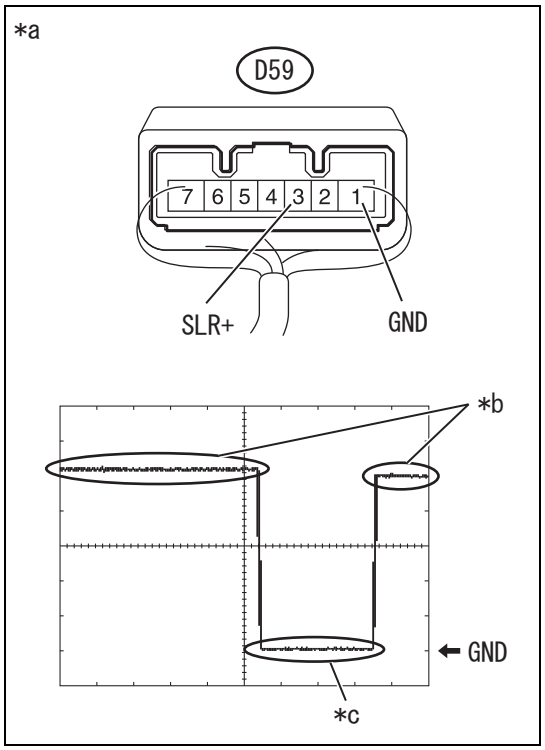

(1) Use an oscilloscope to check the waveform between the terminals.

Item	Contents
Inspection terminals	D59-3 (SLR+) - D59-1 (GND)
Equipment setting	2 V/DIV, 200 ms/DIV
Inspection conditions	Steering lock actuator motor stopped →Steering lock actuator motor running →Steering lock actuator motor stopped

Captions in illustration

*a	Connector connected (Steering lock actuator ASSY (Steering lock ECM))
*b	Steering lock actuator motor stopped
*c	Steering lock actuator motor running

NOTE:

- Lock motor stopped: No operation
- Lock motor running:
  - Steering unlock:
    The electrical key transmitter SUB-ASSY (Electronic key) is being carried and the vehicle is set to ACC ON or IG ON.
  - Steering lock:
    The door is opened while the shifter is in the P position (Transmission A/T) and the vehicle is set to IG OFF and ACC OFF.

NG → Go to Step 10.

OK

4	Reading the SSM4 data (S code check)

(1) Use the SSM4 to perform smart key computer ASSY (Collation ECM) data monitoring.

[SSM4 screen: [Each System] →[Keyless Access(Collation ECM)] →[Data monitor]]

Item name	Description/display range	Normal value	Remarks
[S Code Check]	Verification results between the collation ECM (smart key ECM ASSY) and the ID code box (immobilizer code ECM)/ OK or NG.	OK: Confirmation results normal NG: Confirmation results abnormal Confirmation results abnormal	If abnormal: • The ID code box (immobilizer code ECM) or the collation ECM (smart key ECM ASSY) ID codes are not registered, or they are malfunctioning. • The steering is not locked. • The steering is not unlocked. (The engine cannot be started.)

Criteria: [S code check] is "OK".

NG → Go to Step 12.

OK

5	Reading the SSM4 data (L code check)

(1) Use the SSM4 to perform smart key computer ASSY (Collation ECM) data monitoring.

SR

[SSM4 screen: [Each System] →[Keyless Access(Collation ECM)] →[Data monitor]]

Item name	Description/display range	Normal value	Remarks
[L Code Check]	Indicates the collation results between the smart key computer ASSY (Collation ECM) and the steering lock actuator ASSY (Steering lock ECM). Display range: abnormal / normal	Abnormal: Collation results abnormal OK: Collation results normal	• The smart key computer ASSY (Collation ECM) and the steering lock actuator ASSY (Steering lock ECM) are unable to perform L code registration. • Steering lock cannot be performed. • Steering unlock cannot be performed. (The engine cannot be started.)

Criteria: [L code check] is "OK".

NOTE:

Collation fault causes

- Steering lock actuator ASSY (Steering lock ECM) or smart key computer ASSY (Collation ECM) fault.
- Communication malfunction between both ECMs.
- One of the ECMs was replaced and is not yet registered.
- When replaced with an ECM with a code that has already been written.

NG → Go to Step 13.

OK

6	Replace the steering lock actuator ASSY (Steering lock ECM)

(1) Replace the steering lock actuator (Steering lock ECM) with a new part. (Refer to SR - 59)
(2) Perform registration. (Refer to the "Registration manual for immobilizer")
(3) Turn the ignition switch to ON.
(4) Operate the steering wheel to check the steering lock state.
Criteria: The steering lock is released.

NG → Go to Step 14.

OK

Complete (Failure of the steering lock actuator ASSY)

7	Reading the SSM4 data (driver's door courtesy switch)

(1) Use the SSM4 to perform main body ECM (network gateway computer) data monitoring.

[SSM4 screen: [Each System] →[Body Control] →[Data monitor]]

Item name	Description/display range	Normal value	Remarks
The driver's door courtesy switch	State of the driver's door courtesy light switch. Display range: Closed/Open	[Close]: Driver's door is closed. [Open]: Driver's door is opened.	-

Criteria: The data monitoring trend changes as the driver's door is opened and closed.

SR

NG → Carrying out main body ECM fault diagnosis (Refer to TD - 40)

OK

8 Inspection of the smart key computer ASSY (Collation ECM)

(1) Disconnect the smart key computer ASSY (Collation ECM) connector D41.
(2) Disconnect the brake actuator ASSY (skid control computer) connector A5.
(3) Measure the resistance between the terminals.
Resistance

Inspection terminals	Inspection conditions	Standard value
D41-27 (SPD) - A5-2 (SPD)	Always	Less than 1 Ω
D41-27 (SPD) - A5-2 (SPD) - Chassis ground	Always	10 k Ωor more

NG → Repair or replacement of wiring harness or connector

OK

9 Smart key computer ASSY (Collation ECM)

(1) Replace the smart key computer ASSY (Collation ECM) with a new part.
(2) Perform registration. (Refer to the "Registration manual for immobilizer")
(3) Turn the ignition switch to ON.
(4) Use the SSM4 to perform smart key computer ASSY (Collation ECM) data monitoring.

[SSM4 screen: [Each System] →[Keyless Access(Collation ECM)] →[Data monitor]]

Item name	Description/display range	Normal value	Remarks
[Steering lock lock request reception status]	Indicates the lock request signal reception state. Display range: NG/OK (10 s)	OK: When a lock request is received within 10 seconds after any one of the doors is opened while the shifter is in the P position (Transmission A/T) and the vehicle ignition is turned to IG OFF. NG: Other than above	If "OK" is not displayed even if the steering lock conditions are satisfied, there may be a smart key computer ASSY (Collation ECM) malfunction.

Criteria: After changing from IG ON to IG OFF, a lock request signal is received within 10 seconds after any of the doors are opened.

NG → Replace the ID code box (immobilizer ECM)

OK

Complete (Smart key computer ASSY (Collation ECM) fault)

SR

10	Inspect the wiring harness and connector (Smart key computer ASSY (Collation ECM) - Steering lock actuator ASSY (Steering lock ECM)).

(1) Disconnect the steering lock actuator (Steering lock ECM) connector D59.
(2) Disconnect the smart key computer ASSY (Collation ECM) connector D41.
(3) Confirm that there is no deformation or corrosion on the connector case and terminal.
Criteria: There is no deformation or corrosion on the connector case and terminal.
(4) Measure the resistance between the terminals.
Resistance

Inspection terminals	Inspection conditions	Standard value
D41-29 (SLR+) - D59-3(SLR+)	Always	Less than 1 Ω
D59-3 (SLR+) - Chassis ground	Always	10 k Ωor more

NG → Repair or replacement of wiring harness or connector

OK

11	Replacement of the steering lock actuator ASSY (Steering lock ECM)

(1) Replace the steering lock actuator ASSY (Steering lock ECM) with a new part. (Refer to SR - 60)
(2) Perform registration. (Refer to the "Registration manual for immobilizer")
(3) Turn the ignition switch to ON.
(4) Operate the steering wheel to check the steering lock state.
Criteria: The steering lock is released.

NG → Replacement of the smart key computer ASSY (Collation ECM)

OK

Complete (Failure of the steering lock actuator ASSY)

12	Replace the ID code box (immobilizer ECM)

(1) Replace the ID code box (immobilizer ECM) with a new part.
(2) Perform registration. (Refer to the "Registration manual for immobilizer").

(3) Turn the ignition switch to ON.
(4) Use the SSM4 to perform smart key computer ASSY (Collation ECM) data monitoring.

[SSM4 screen: [Each System] →[Keyless Access(Collation ECM)] →[Data monitor]]

Item name	Description/display range	Normal value	Remarks
[S Code Check]	Verification results between the collation ECM (smart key ECM ASSY) and the ID code box (immobilizer code ECM)/ OK or NG.	OK: Confirmation results normal NG: Confirmation results abnormal Confirmation results abnormal	If abnormal: • The ID code box (immobilizer code ECM) or the collation ECM (smart key ECM ASSY) ID codes are not registered, or they are malfunctioning. • The steering is not locked. • The steering is not unlocked. (The engine cannot be started.)

Criteria: [S code check] is "OK".

NG → Replacement of the smart key computer ASSY (Collation ECM)

OK

Complete (ID code box (immobilizer ECM) fault)

13	Replace the ID code box (immobilizer ECM)

(1) Replace the ID code box (immobilizer ECM) with a new part.
(2) Perform registration. (Refer to the "Registration manual for immobilizer").
(3) Turn the ignition switch to ON.
(4) Use the SSM4 to perform smart key computer ASSY (Collation ECM) data monitoring.

[SSM4 screen: [Each System] →[Keyless Access(Collation ECM)] →[Data monitor]]

Item name	Description/display range	Normal value	Remarks
[L Code Check]	Display range indicating the collation results between the smart key computer ASSY (Collation ECM) and the steering lock actuator ASSY (Steering lock ECM). abnormal / normal	Abnormal: Collation results abnormal: Collation results normal	• The smart key computer ASSY (Collation ECM) and the steering lock actuator ASSY (Steering lock ECM) are unable to perform L code registration. • Steering lock cannot be performed. • Steering unlock cannot be performed. (The engine cannot be started).

Criteria: [L code check] is "OK".

NG → Replacement of the steering lock actuator ASSY (Steering lock ECM) (Refer to SR - 59)

OK

Complete (ID code box (immobilizer ECM) fault)

14	Replacement of the smart key computer ASSY (Collation ECM)

(1) Replace the smart key computer ASSY (Collation ECM) with a new part.
(2) Perform registration. (Refer to the "Registration manual for immobilizer").
(3) Turn the ignition switch to ON.
(4) Operate the steering wheel to check the steering lock state.
Criteria: The steering lock is released.

NG → Replace the ID code box (immobilizer ECM)

OK

Complete (Smart key computer ASSY (Collation ECM) fault)

Steering system

Precautions

1. SRS airbag system handling and precautions for operation
   CAUTION:
   As this maintenance procedure may have an effect on the SRS airbag system, be sure to check the SRS airbag system precautions before commencing work. (Refer to RS - 5)
2. Correct handling and precautions for operation
   (1) Handling of the steering computer ASSY
      (a) Do not apply any impact to the steering column ASSY (particularly the motor and torque sensor parts). Be sure to replace with a new part if strong impact is applied (such as hitting or dropping the part).
      (b) Do not pull on the steering column ASSY wiring harness.
      (c) Do not release the tilt lever while the steering column ASSY is removed from the vehicle.
      (d) After replacing the steering column ASSY, perform torque sensor zero point calibration and rotation angle sensor output calibration. (Refer to PA - 12)
   (2) Precautions when connecting or disconnecting connectors
      (a) Before you disconnect any connectors related to the electric power steering system, turn the ignition to IG ON and set the steering to the straight-ahead position. Disconnect the connector after turning the ignition to IG OFF.
      (b) Before you connect any connectors related to the electric power steering system, confirm that the ignition is turned to IG OFF, connect the connector and turn the ignition to IG ON while the steering is in the straight-ahead position.
      CAUTION:
      Do not turn the ignition to IG ON if the steering is not in the straight-ahead position.
   (3) Steering roll connector precautions
      (a) Do not install/remove the steering roll connector SUB-ASSY while the ignition is set to IG ON or the battery ground terminal is connected.
      (b) Do not rotate the steering roll connector SUB-ASSY without the steering wheel ASSY attached while the ignition is set to IG ON and the battery ground terminal is connected.
      (c) When attaching the steering roll connector SUB-ASSY and steering wheel ASSY, be sure to carry out steering roll connector SUB-ASSY centering. (Refer to RS - 252)
      CAUTION:
      If centering is not carried out, the steering roll connector SUB-ASSY may become disconnected upon operation of the steering wheel ASSY.

On-vehicle inspection

1. Check of steering wheel play
   (1) Start the engine and place the vehicle in a state where power steering can operate.
   (2) Place the vehicle in the straight-ahead position.
   (3) Lightly move the steering wheel ASSY with your fingers to check for play.
      Limit: Within 30 mm {1.18 in}
      NOTE:
      If it exceeds this limit, refer to the symptom table and check each appropriate part. (Refer to SR - 49)

Symptom table

Steering (mechanical factors) symptom table

Symptoms	Inspection items	Reference pages
Steering operation is heavy	Front tires (improperly inflated, uneven wear)	TW - 2
	Front wheel alignment (improper)	AL - 2
	Front suspension (lower ball joint)	FP - 17
	Steering column ASSY	SR - 64
	Steering gear ASSY	SL - 10
	Power steering computer power supply voltage	PA - 14
	Power steering computer ASSY	PA - 40
	The presence of continued operation under high load or dry steering	-

Symptoms	Inspection items	Reference pages
Poor steering wheel return to center	Front tires (improperly inflated, uneven wear)	TW - 2
	Front wheel alignment (improper)	AL - 2
	Steering column ASSY	SR - 64
	Steering gear ASSY	SL - 10
	Power steering computer ASSY	PA - 40
Steering exhibits no or excess play	Steering intermediate shaft ASSY No.2	SR - 64
	Steering column ASSY	SR - 64
There is a thumping noise during power steering operation, when the steering wheel returns to the neutral position	Steering intermediate shaft ASSY No.2	SR - 64
	Front suspension (lower ball joint)	FP - 17
	Front axle hub (hub bearing)	AD - 7
	Steering gear ASSY	SL - 10
There is a rubbing sound when the steering wheel is turned during slow driving	Steering column ASSY	SR - 54
	Steering roll connector	RS - 252
	Rubbing of the steering wheel and the column cover	SR - 69
An abnormal high-pitched squeaking sound occurs when the steering wheel is slowly turned when the vehicle is stopped	Steering column ASSY	SR - 62
	Steering wheel installation condition	SR - 69
The steering wheel vibrates (accompanied with a noise) during dry steering	Steering column ASSY	SR - 62
	Steering wheel installation condition	SR - 69
P/S warning light remains ON	Refer to the flow chart	PA - 35

Steering column ASSY

Exploded view

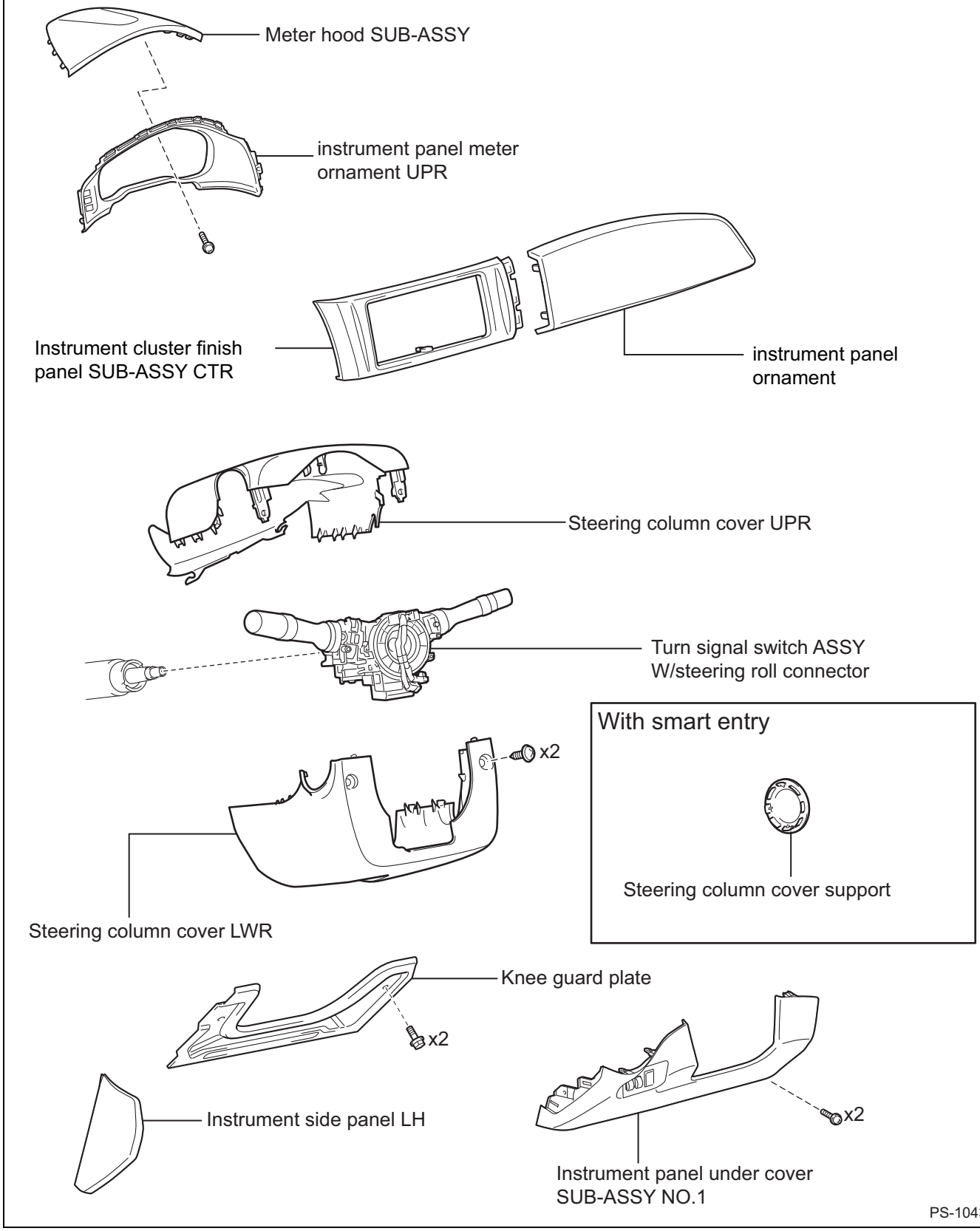

SR

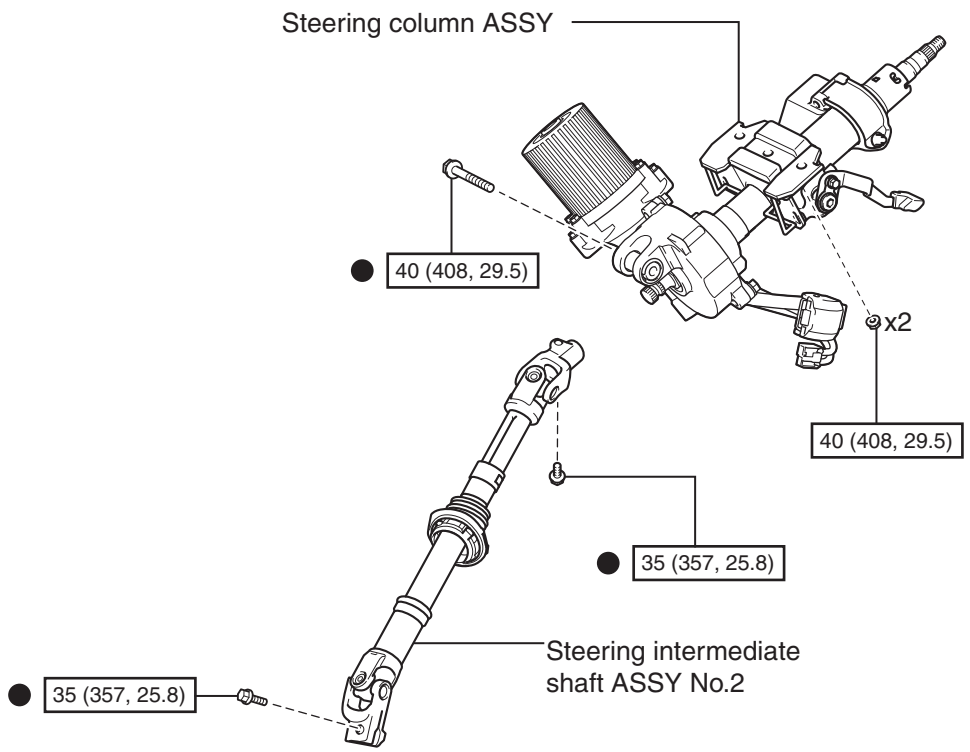

N•m {kgf•cm, ft•lbf} : Tightening torque

● Non-reusable parts

PS-01527

SR

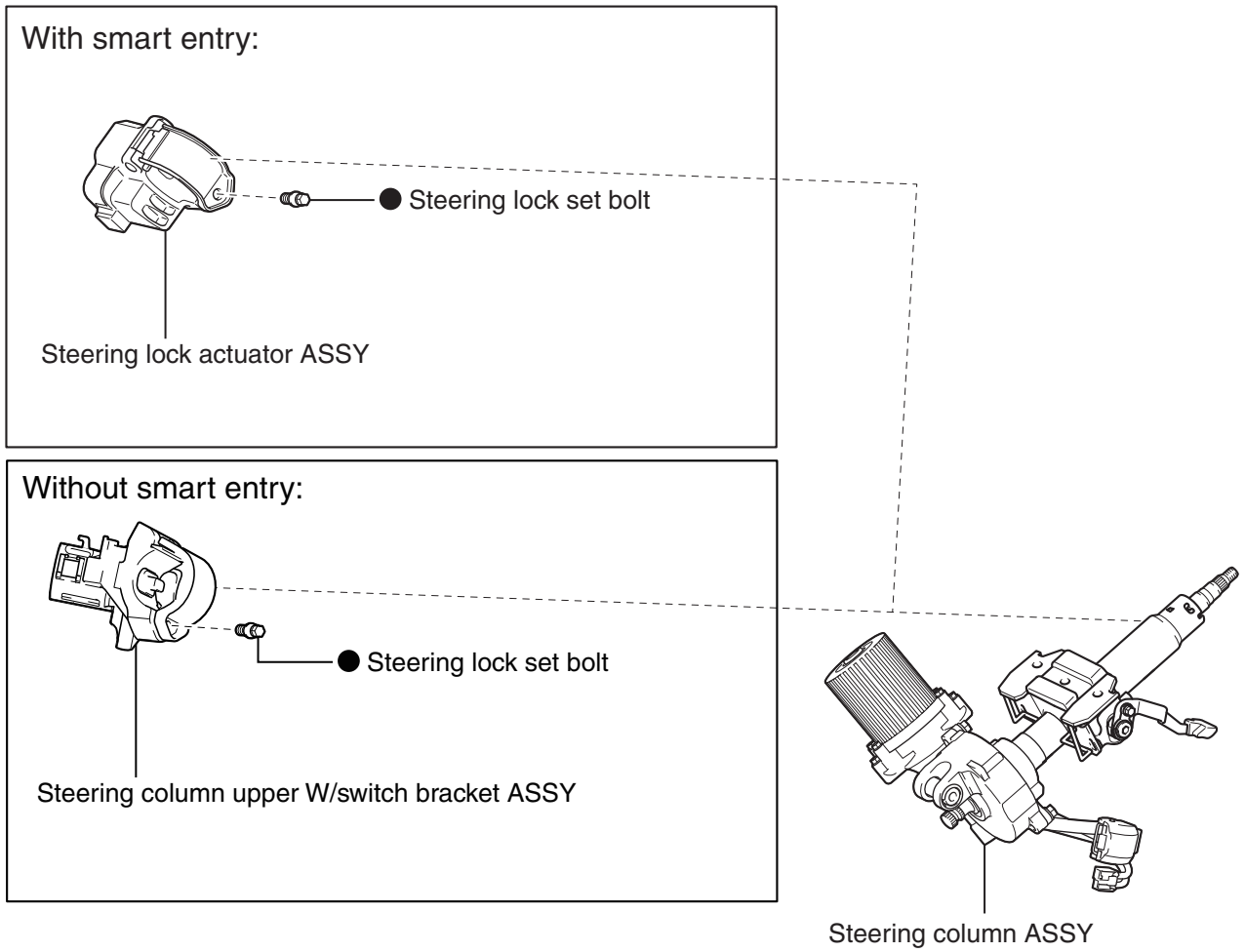
With smart entry:
● Steering lock set bolt
Steering lock actuator ASSY
Without smart entry:
● Steering lock set bolt
Steering column upper W/switch bracket ASSY
Steering column ASSY
● Non-reusable parts
PS-01528

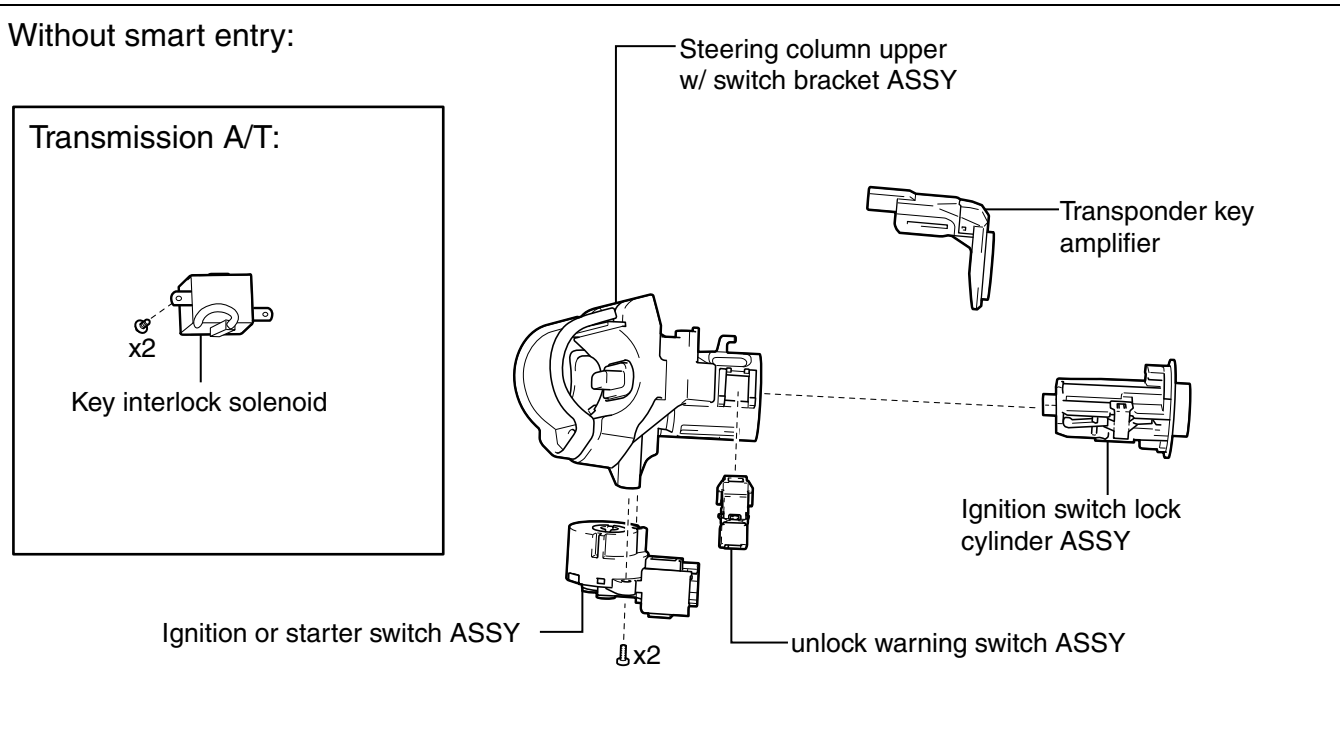
Without smart entry:
Transmission A/T:
x2
Key interlock solenoid
Steering column upper
w/ switch bracket ASSY
Transponder key
amplifier
Ignition switch lock
cylinder ASSY
Ignition or starter switch ASSY
x2
unlock warning switch ASSY

Removal

1. Correct handling and precautions for operation (Refer to PA - 3)
2. Confirmation of front tires in the straight-ahead position
3. Disconnect the battery ground terminal.
   WARNING:
   As the airbag and pretensioner system is equipped with a backup power supply, if you start work within 60 seconds of disconnecting the battery ground terminal, the airbag may accidently deploy.
   CAUTION:
   To avoid damage to the molding, be sure to fully open the door glasses on both driver's and passenger's sides.
4. Removal of the steering wheel ASSY (Refer to SR - 67)
5. Removal of the instrument side panel LH (Refer to IT - 24)
6. Removal of the instrument panel under cover SUB-ASSY No. 1 (Refer to ME - 68)
7. Removal of the instrument panel ornament (Refer to IT - 22)
8. Removal of instrument cluster finish panel SUB-ASSY CTR (Refer to IT - 23)
9. Remove the meter hood SUB-ASSY.
10. Remove the instrument panel meter ornament UPR.

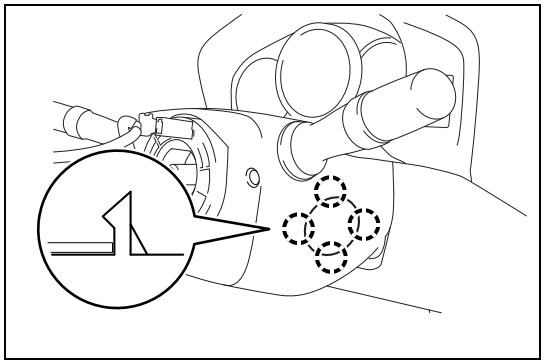

11. Removal of the steering column cover support (with smart entry)
    (1) Unhook the 4 tabs and remove the steering column hole cover SUB-ASSY No.1 (Steering column cover support).

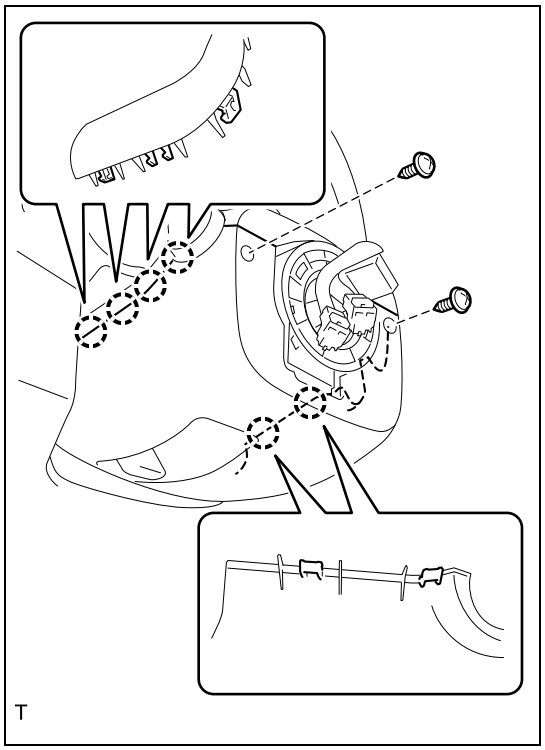

12. Removal of the steering column cover LWR
    (1) Remove the two screws.
    (2) Unhook the six tabs and remove the steering column cover LWR.

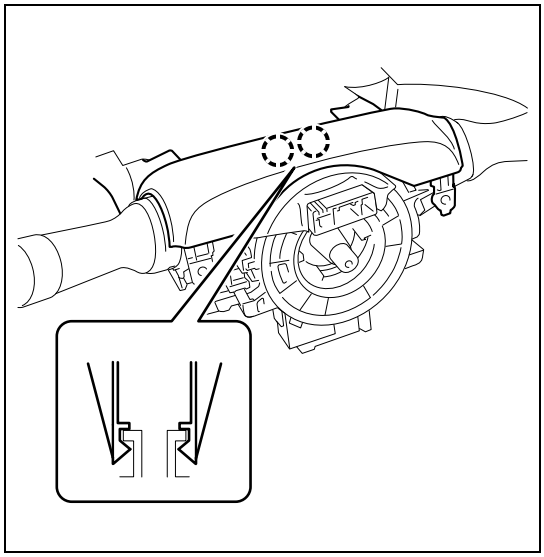

13. Removal of the steering column cover UPR
    (1) Unhook the two tabs and remove the steering column cover UPR.

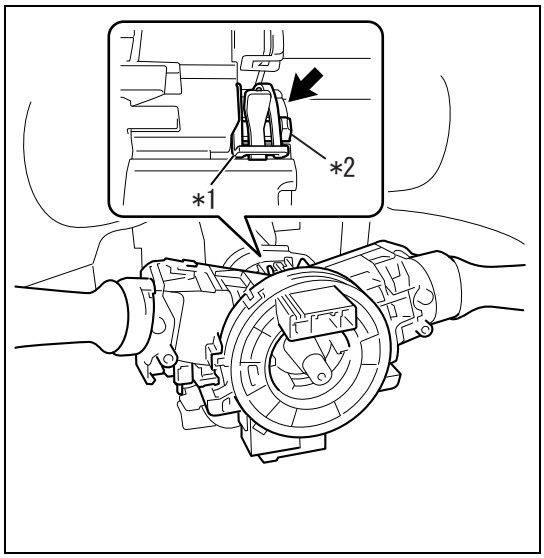

14. Removal of the turn signal switch ASSY W/Steering roll connector
    (1) Disconnect each connector from the turn signal switch ASSY W/ Steering roll connector.
    (2) Use pliers to loosen the clamp.
    (3) When the clamp is loose, use a thin flat tip screwdriver to unhook the tabs and remove the turn signal switch ASSY W/Steering roll connector from the steering column ASSY.

Captions in illustration

*1	Clamp
*2	Tab

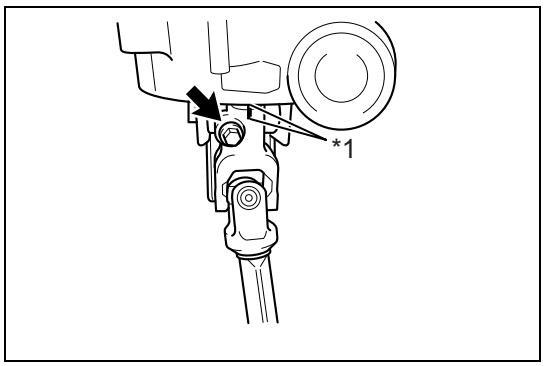

15. Removal of the steering intermediate shaft ASSY No.2
    (1) Place an alignment mark across the steering sliding yoke SUB-ASSY and the steering column ASSY.

Captions in illustration

*1	Alignment marks

    (2) Undo the bolt, and remove the steering sliding yoke SUB-ASSY from the steering column ASSY.

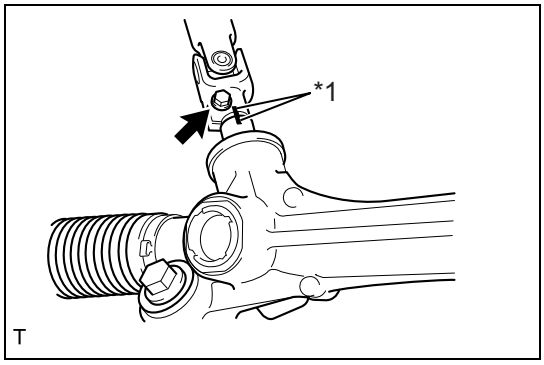

    (3) Place an alignment mark across the steering sliding yoke SUB-ASSY and the steering gear ASSY.

Captions in illustration

*1	Alignment marks

    (4) Undo the bolt, and remove the steering sliding yoke SUB-ASSY from the steering gear ASSY.

T

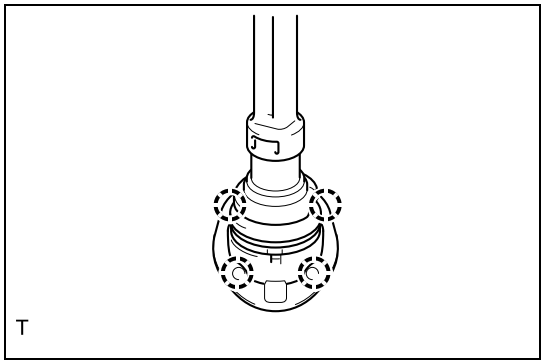

(5) Unhook the four tabs on the vehicle exterior side and remove the steering sliding yoke SUB-ASSY from the vehicle interior side.

16. Remove the steering column ASSY.

(1) Disconnect the two connectors from the power steering computer ASSY.

NOTE:

As shown in the figure, after pulling out the lock for the lock lever, fold down the lock lever and remove the connector.

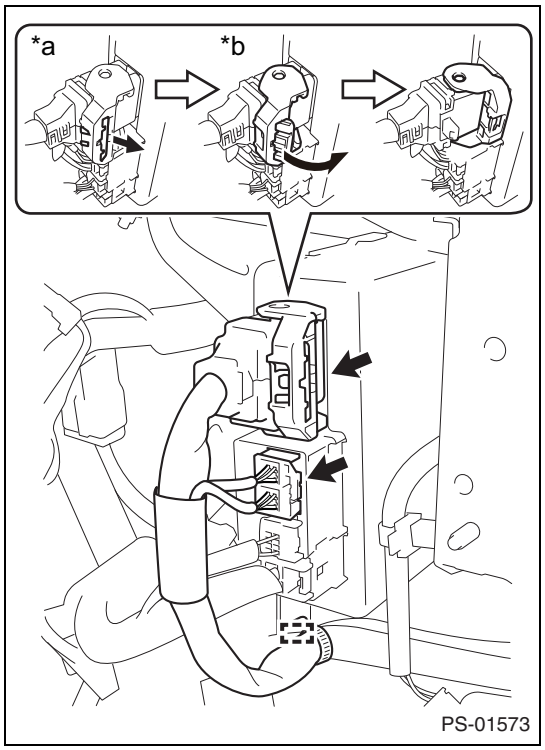

Captions in illustration

*a	Pull out the lock.
*b	Fold down the lock lever.

(2) Disconnect the wiring harness clamp from the power steering computer ASSY.

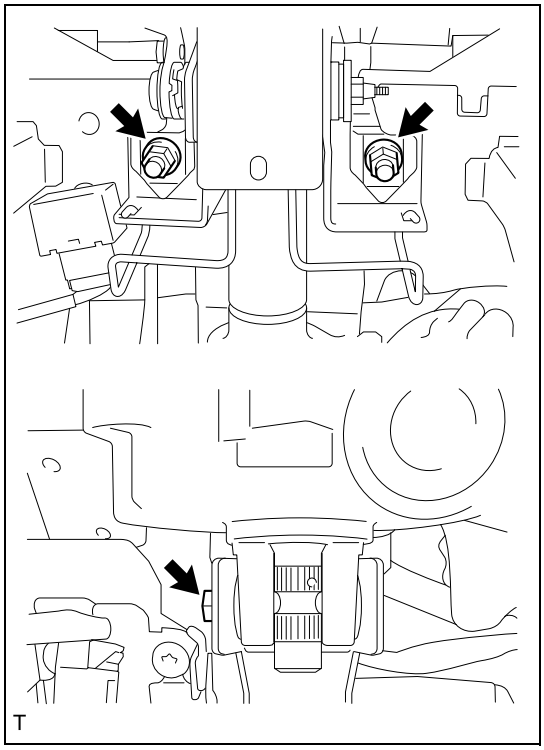

(3) Undo the two nuts and bolts and remove the steering column ASSY from the instrument panel reinforcement ASSY.
NOTE:
When pulling out the bolts, removal becomes easier if you lift up the steering column ASSY motor section and tilt the steering column ASSY.

SR

Disassembly

1. Removal of the steering column upper W/switch bracket ASSY (without smart entry)
   (1) Secure the steering column ASSY in a vise between aluminium plates.
   CAUTION:
   Do not close the vise too strongly.
   (2) Use a drill to make a hole with a reverse tap in the steering lock set bolt head.

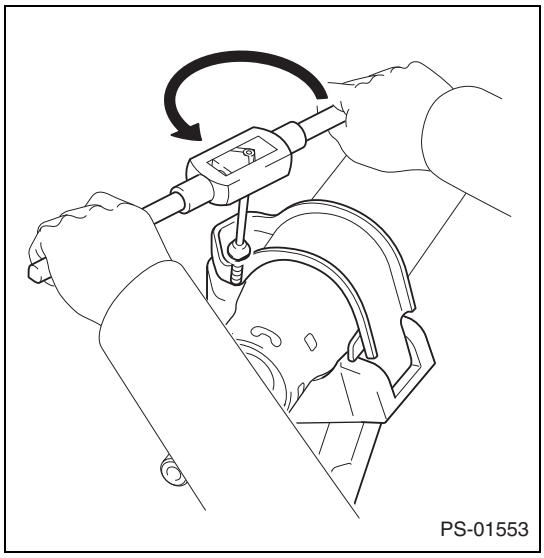

(3) Use the reverse tap to pull out the steering lock set bolt and remove the steering column upper W/switch bracket ASSY.

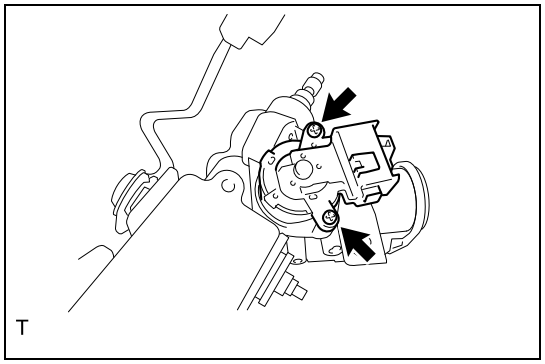
T

2. Removal of the ignition or starter switch ASSY (without smart entry)
   (1) Undo the two screws and remove the ignition or starter switch ASSY from the steering column upper bracket.
   CAUTION:
   - When doing this, please ensure that the ignition or starter switch ASSY is on the top and the steering column upper bracket is on the bottom side.
   - Inspect the condition of the press-fit areas marked by the arrows and replace the steering column upper bracket with a new part if you notice any play or unsteadiness.

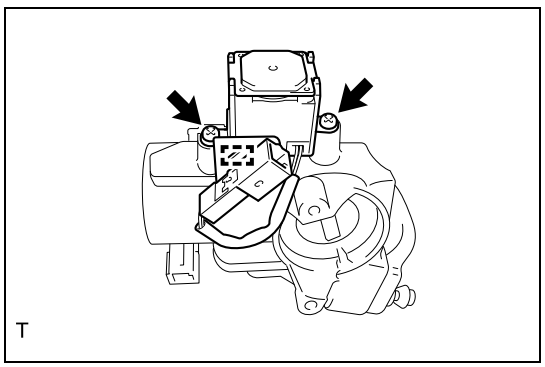
T

3. Removal of the key interlock solenoid (without smart entry, Transmission A/T)
   (1) Undo the two screws and remove the key interlock solenoid from the steering column bracket ASSY UPR.
   (2) Release the clamp and disconnect the connector.

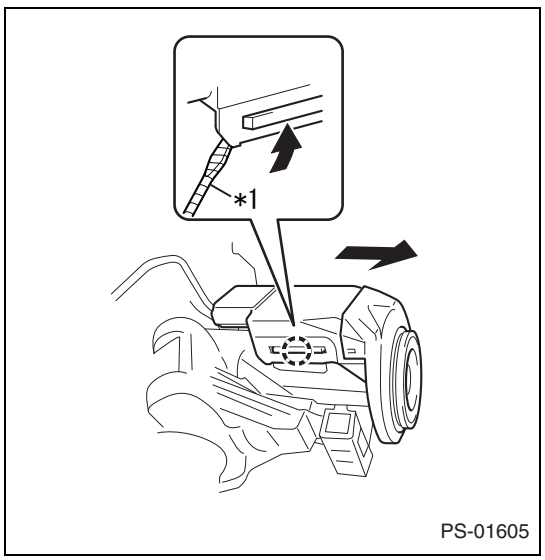

PS-01605

4. Removal of the transponder key amplifier
   (1) Use a thin flat tip screwdriver wrapped with protection tape to unhook the two tabs and remove the transponder key amplifier from the steering column bracket ASSY UPR.

Captions in illustration

*1	Protection tape

5. Removal of the unlock warning switch ASSY (without smart entry)
   (1) Insert the key.

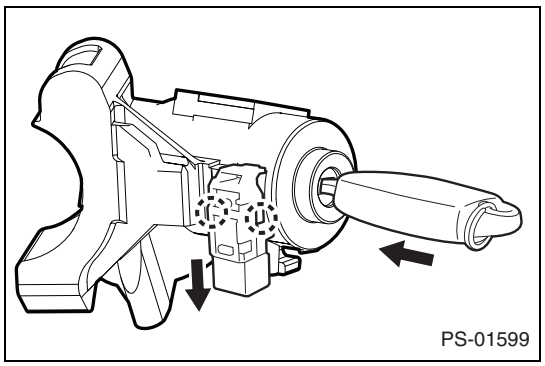
PS-01599

   (2) Unhook the two tabs and remove the unlock warning switch ASSY.
   NOTE:
   Remove the unlock warning switch ASSY by sliding it in the direction indicated by the arrows in the diagram.

6. Removal of the ignition switch lock cylinder ASSY (without smart entry)
   (1) Turn the ignition switch lock cylinder ASSY to the ACC position.

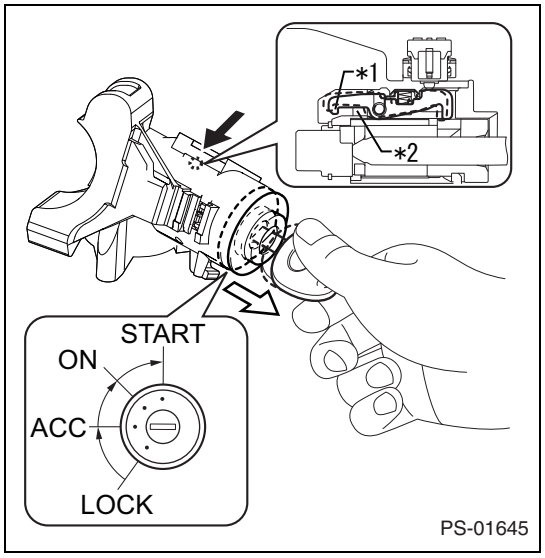

(2) Insert a thin flat tip screwdriver into the hole in the steering column upper bracket, as indicated in the diagram, and pull until the tab on the ignition switch lock cylinder ASSY comes into contact with the steering column upper bracket stopper.

Captions in illustration

*1	Tab
*2	Stopper
➡	Press
⇨	Pull out

CAUTION:
If you don't sufficiently pull until the tab on the ignition switch lock cylinder ASSY comes into contact with the steering column upper bracket stopper, it may interfere with the next process. Please ensure that it is fully in contact with the stopper.

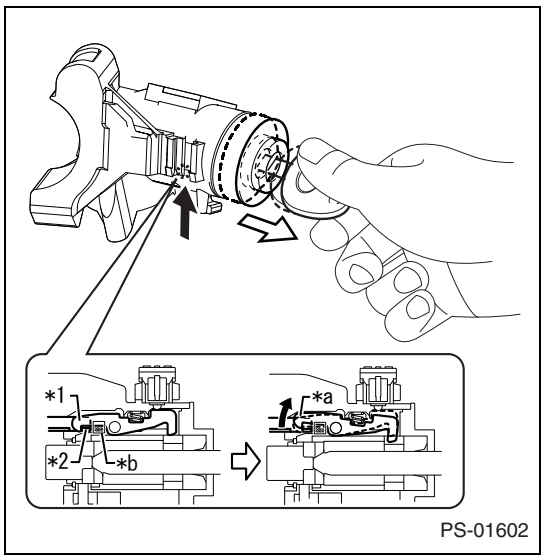

(3) Insert a thin flat tip screwdriver into the hole in the steering column upper bracket, as indicated in the diagram. Pull down the screwdriver in the direction indicated by the arrow in the diagram, and unhook the ignition switch lock cylinder ASSY tabs. Remove the ignition switch lock cylinder ASSY.

Captions in illustration

*1	Tab
*2	Stopper
*a	Unhook the tabs
*b	Hole for screwdriver
➡	Pull down
⇨	Pull out

7. Removal of the steering lock actuator ASSY (with smart entry)
   (1) Secure the steering column ASSY in a vise between aluminium plates.
   CAUTION:
   Do not close the vise too strongly.
   (2) Use a drill to make a hole with a reverse tap in the steering lock set bolt head.

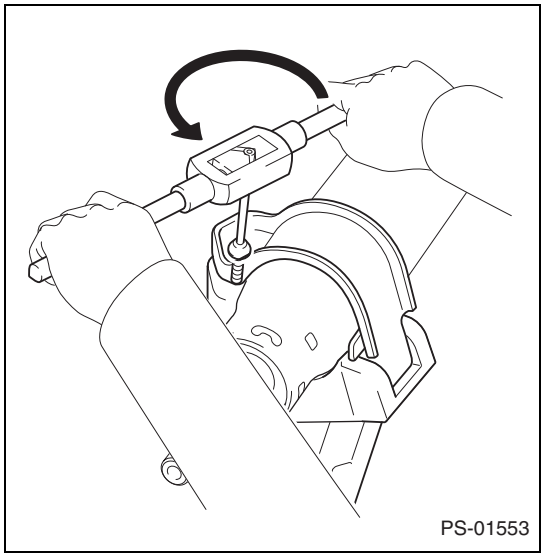

(3) Use the reverse tap to pull out the steering lock set bolt and remove the steering lock actuator ASSY.

Assembly

1. Install the steering lock ASSY (With smart entry)
   (1) Secure the steering column ASSY in a vise between aluminium plates.
   CAUTION:
   Do not close the vise too strongly.

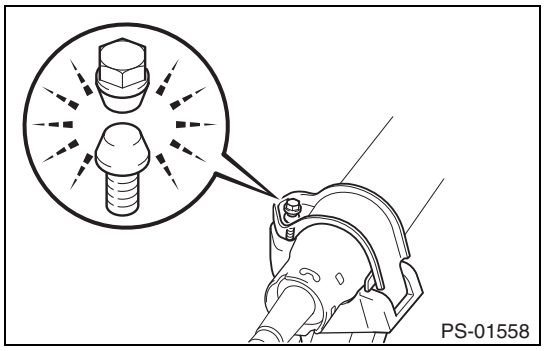

(2) Attach the steering lock actuator ASSY with a new steering lock set bolt and tighten it until the bolt head is wrenched off.

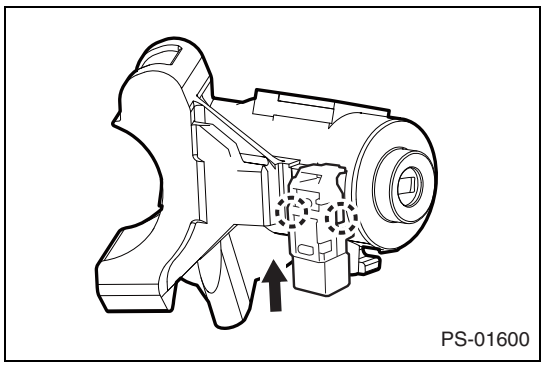

2. Installation of the unlock warning switch ASSY (without smart entry)
   (1) Engage the two tabs and install the unlock warning switch ASSY onto the steering column upper bracket.
   NOTE:
   Install the unlock warning switch ASSY by sliding it in the direction indicated by the arrows in the diagram.

3. Installation of the ignition switch lock cylinder ASSY (without smart entry)
   (1) Line up the ignition switch lock cylinder ASSY in the ACC position.

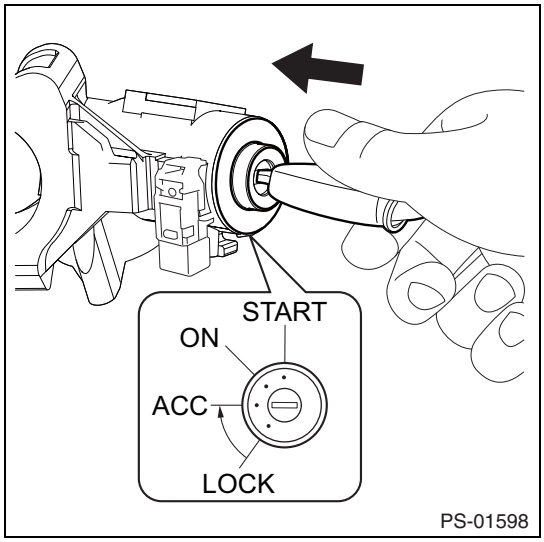

(2) Insert the ignition switch lock cylinder ASSY into the steering column upper bracket.

(3) Confirm that the ignition switch lock cylinder ASSY is securely fixed in place.

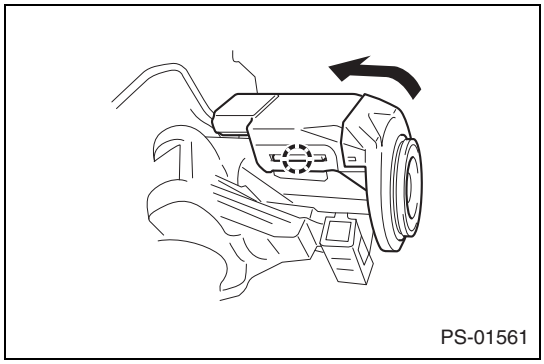

4. Installation of the transponder key amplifier (without smart entry)
   (1) Engage the two tabs and install the transponder key amplifier onto the steering column upper bracket.

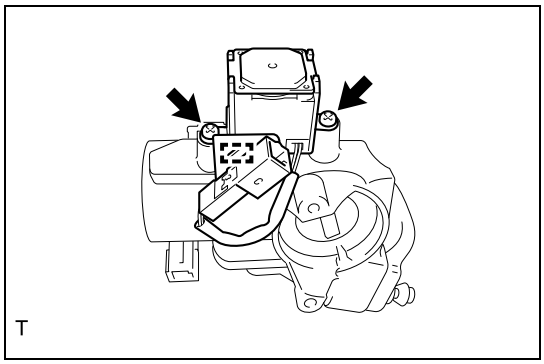

5. Installation of the key interlock solenoid (without smart entry, Transmission A/T)
   (1) Install the key interlock solenoid onto the steering column upper bracket and fasten the two screws.
   (2) Use the clamp to connect the connector.

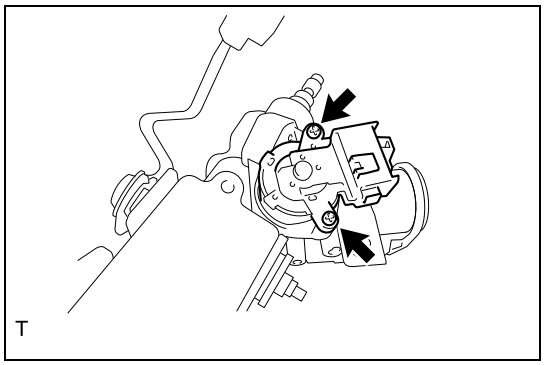

6. Installation of the ignition or starter switch ASSY (without smart entry)
   (1) Install the ignition or starter switch ASSY onto the steering column upper bracket and fasten the two screws.

7. Inspection of the steering lock mechanism functionality (with smart entry)
   (1) Pull out the key and check that the steering lock mechanism is working.
   (2) Insert the key and check that the steering lock mechanism unlocks when the key is turned to the ACC position.
8. Installation of the steering column upper W/switch bracket ASSY (without smart entry)
   (1) Secure the steering column ASSY in a vise between aluminium plates.

CAUTION:
Do not close the vise too strongly.

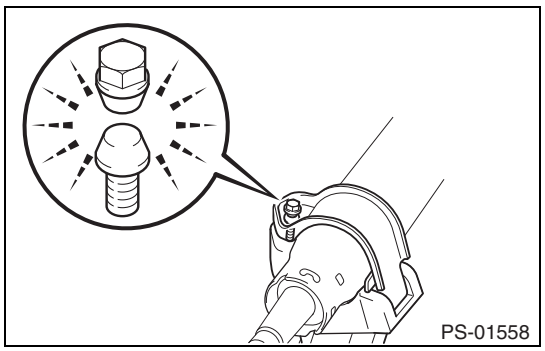

(2) Attach the steering column upper W/switch bracket ASSY with a new steering lock set bolt and tighten it until the bolt head is wrenched off.

Installation

1. Confirm that the front tires are in the straight-ahead position.
2. Install the steering column ASSY.
   (1) Install the steering column ASSY into the instrument panel reinforcement ASSY with the two nuts and new bolts.
   Standard value:T=40N·m {408kgf·cm} {29.5ft·lbf}
   CAUTION:
   Be careful not to pinch the wiring harness between the body.

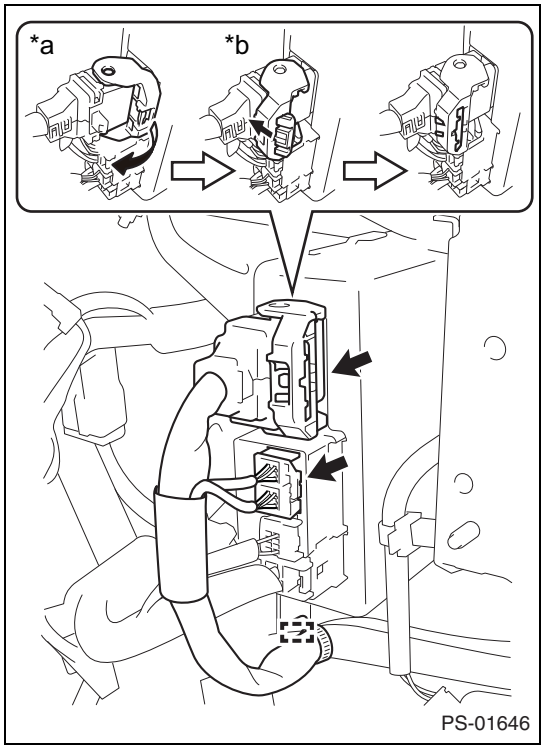

(2) Connect the two connectors to the power steering computer ASSY.

Captions in illustration

*a	Fold down the lock lever.
*b	Press in the lock.

(3) Install the wiring harness clamp onto the power steering computer ASSY.

3. Installation of the steering intermediate shaft ASSY No.2
   (1) Pass the steering intermediate shaft ASSY No.2 through the hole in the body from the vehicle interior side.

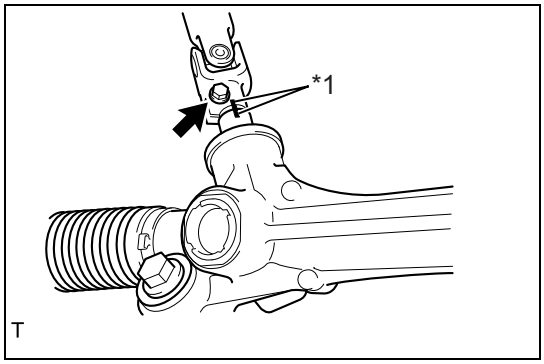

(2) Line up the alignment marks and connect the steering intermediate shaft ASSY No.2 to the steering gear ASSY.

Captions in illustration

*1	Alignment marks

(3) Attach a new bolt.
Standard value:T=35N·m {357kgf·cm} {26ft·lbf}

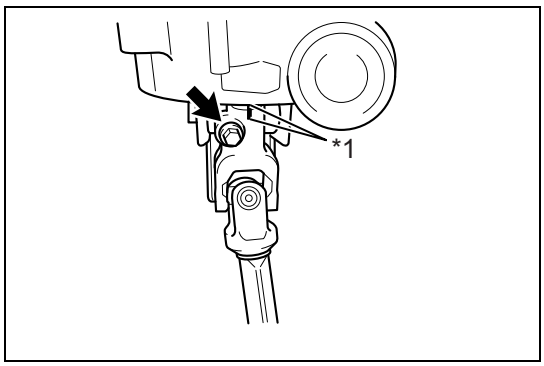

(4) Line up the alignment marks and connect the steering intermediate shaft ASSY No.2 to the steering column ASSY.

Captions in illustration

*1	Alignment marks

(5) Attach a new bolt.
Standard value:T=35N·m {357kgf·cm} {25.8ft·lbf}

(6) Engage the four tabs and install the dust shield to the vehicle.

4. Installation of the turn signal switch ASSY W/Steering roll connector
   (1) Install the turn signal switch ASSY W/Steering roll connector onto the steering column ASSY when the clamp is loose.
   (2) Engage the tabs on the turn signal switch ASSY W/Steering roll connector with the steering column ASSY and tighten the clamp.
   (3) Connect each connector to the turn signal switch ASSY W/Steering roll connector.
5. Installation of the steering column cover UPR
   (1) Engage the two tabs and install the steering column cover UPR.
6. Installation of the steering column cover LWR
   (1) Engage the six tabs and install the steering column cover LWR.
   (2) Install the two screws into the steering column cover LWR.
7. Installation of the steering column cover support (with smart entry)
   (1) Engage the 4 tabs and install the steering column cover support.
8. Installation of the instrument panel meter ornament UPR (Refer to IT - 29)
9. Installation of the meter hood SUB-ASSY (Refer to IT - 29)
10. Installation of instrument cluster finish panel SUB-ASSY CTR (Refer to IT - 29)
11. Installation of the instrument panel ornament (Refer to IT - 29)
12. Steering roll connector centering (Refer to RS - 252)
13. Installation of the instrument panel under cover SUB-ASSY No.1 (Refer to ME - 69)
14. Installation of the instrument side panel RH (Refer to IT - 29)
15. Installation of the steering wheel ASSY (Refer to SR - 69)
16. Connection of the battery ground terminal
    Standard value:T=6.0N·m {61kgf·cm} {4.43ft·lbf}
17. Settings when removing/installing battery terminals (Refer to IN - 6)
18. Settings during parts replacement and installation/removal (Refer to PA - 12)

19. Inspection of airbag warning light (Refer to RS - 53)
20. VDC sensor mid point setting (Refer to BC - 15)

Unit inspection

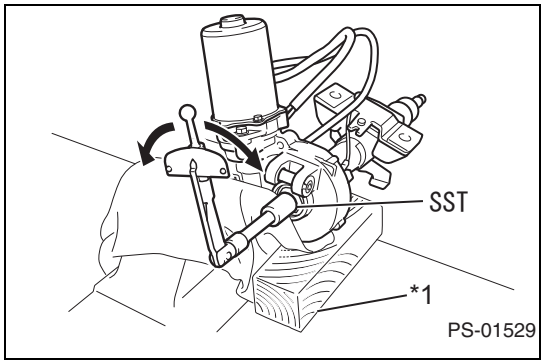

1. Inspection of the steering column ASSY
   (1) Preload inspection
   (a) As shown in the diagram, secure the steering column ASSY in a vise between cloth or aluminium plates.

Captions in illustration

*1	Wooden block

CAUTION:
- Do not close the vise too strongly as it may cause deformation to the steering column ASSY.
- Place a wooden block to prevent the steering column ASSY from falling.

(b) Use a SST and a torque wrench to measure the rotational torque when rotating it at a constant speed of approximately one turn every four seconds.
SST 09616-00011
Standard value:Preload
T=1.77N·m {18kgf·cm} {1.3 ft·lbf} or less
CAUTION:
Make sure that there is no abnormal sticking during rotation.
If it is not within specification, replace the steering column ASSY with a new part.

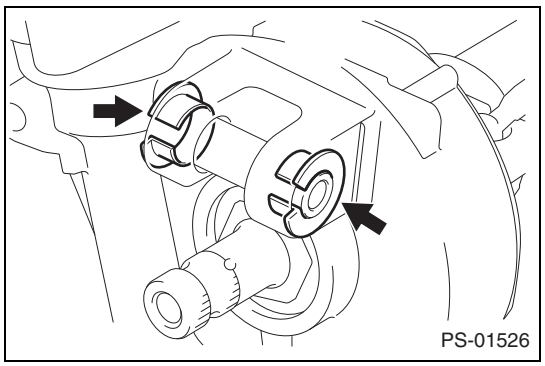

(2) Bushing inspection
(a) Confirm that the two steering column ASSY bushings are securely installed.
If you find any bushing that is deformed, damaged, or detached, replace the steering column ASSY with a new part.

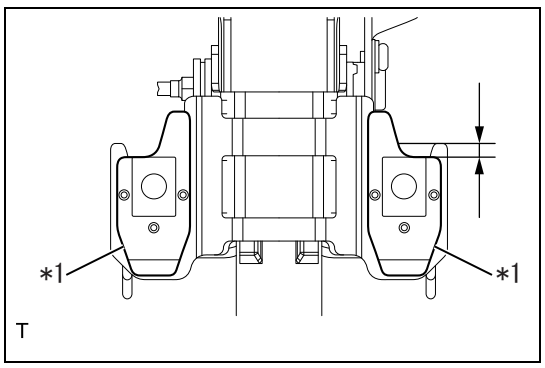

(3) Capsule inspection.
(a) Confirm that the two steering column ASSY capsules are securely installed.

Captions in illustration

*1	Capsule

Criteria: 5 mm {0.20 in} or more
CAUTION:
- If it does not meet the standard, replace the steering column ASSY with a new part.
- If you find any capsule that is deformed, damaged, or detached, replace the steering column ASSY with a new part.

2. Inspection of the steering intermediate shaft ASSY No.2
   (1) Looseness inspection

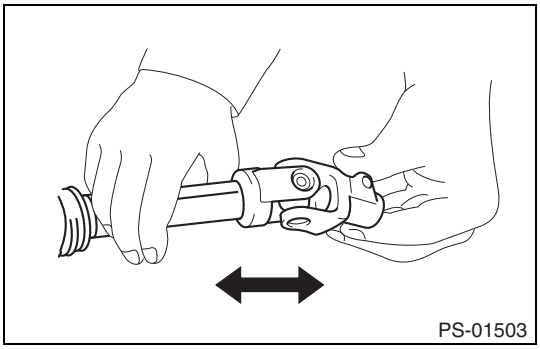

(a)Inspect the universal joint area for excessive looseness.
Standard value: 0 mm {0 in}
NOTE:
If it is not within the specified value, replace the steering intermediate shaft ASSY No.2 with a new part.

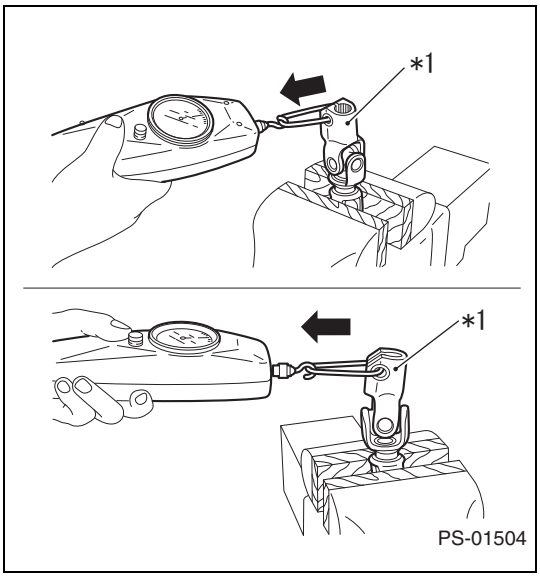

(2) Folding load inspection
(a)Arrange the steering intermediate shaft ASSY No.2 so that the yoke on the rack and pinion power steering gear ASSY side is orientated up, and secure it in a vise between objects such as wooden blocks.
(b)Use a push-pull gauge to measure the folding load in both directions.

Captions in illustration

*1	Yoke on the steering gear ASSY side

Standard value: T = 6.6 N {0.67 kgf} {1.48 lbf} or less.
NOTE:
If it is not within the specified value, replace the steering intermediate shaft ASSY No.2 with a new part.

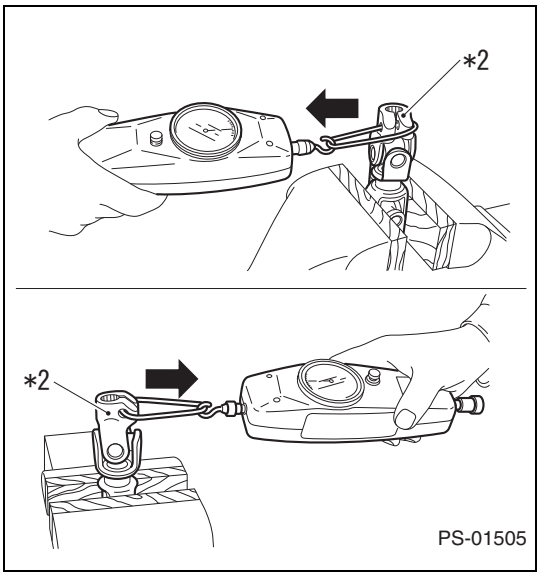

(c)Arrange the steering intermediate shaft ASSY No.2 so that the yoke on the steering column ASSY side is orientated up, and secure it in a vise between objects such as wooden blocks.
(d)Use a push-pull gauge to measure the folding load in both directions.

Captions in illustration

*2	Yoke on the steering column ASSY side

Standard value: T = 6.0N {0.61 kgf} {1.35 lbf} or less.
NOTE:
If it is not within the specified value, replace the steering intermediate shaft ASSY No.2 with a new part.

Steering wheel

Exploded view

SR

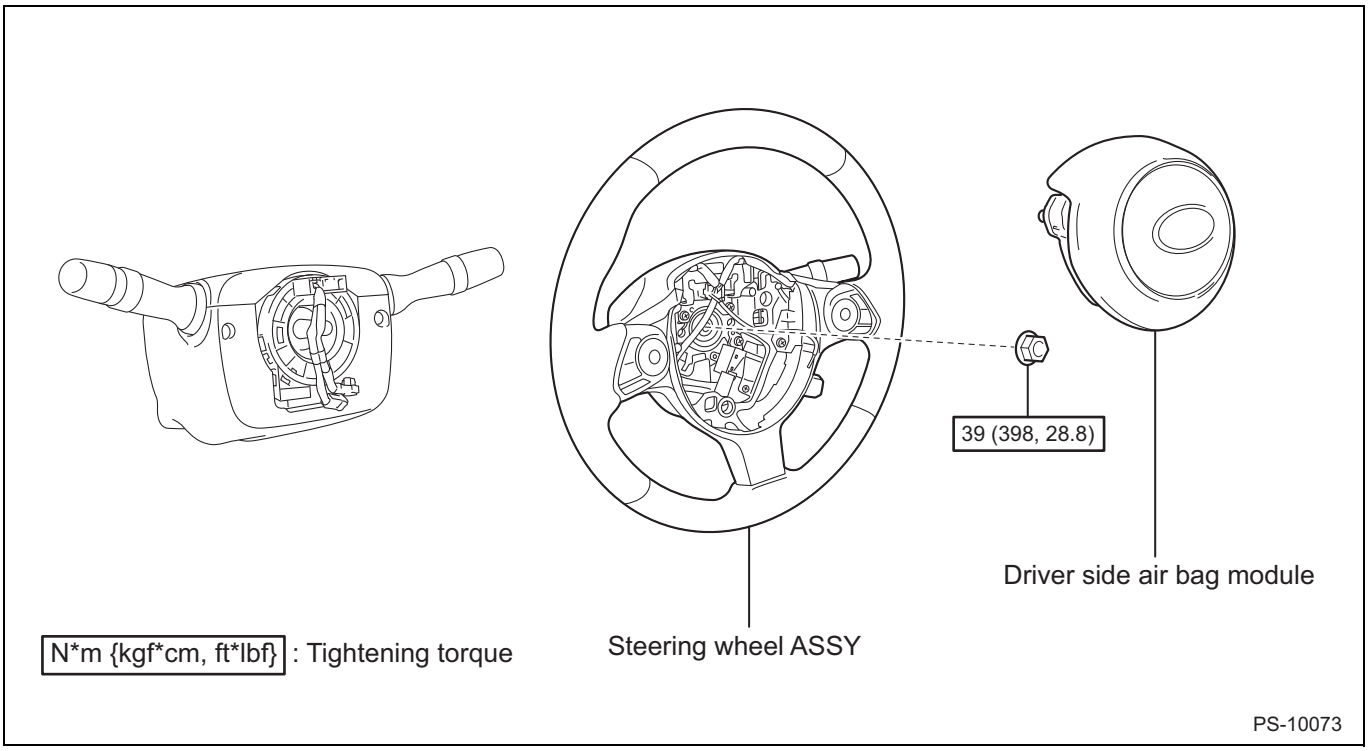

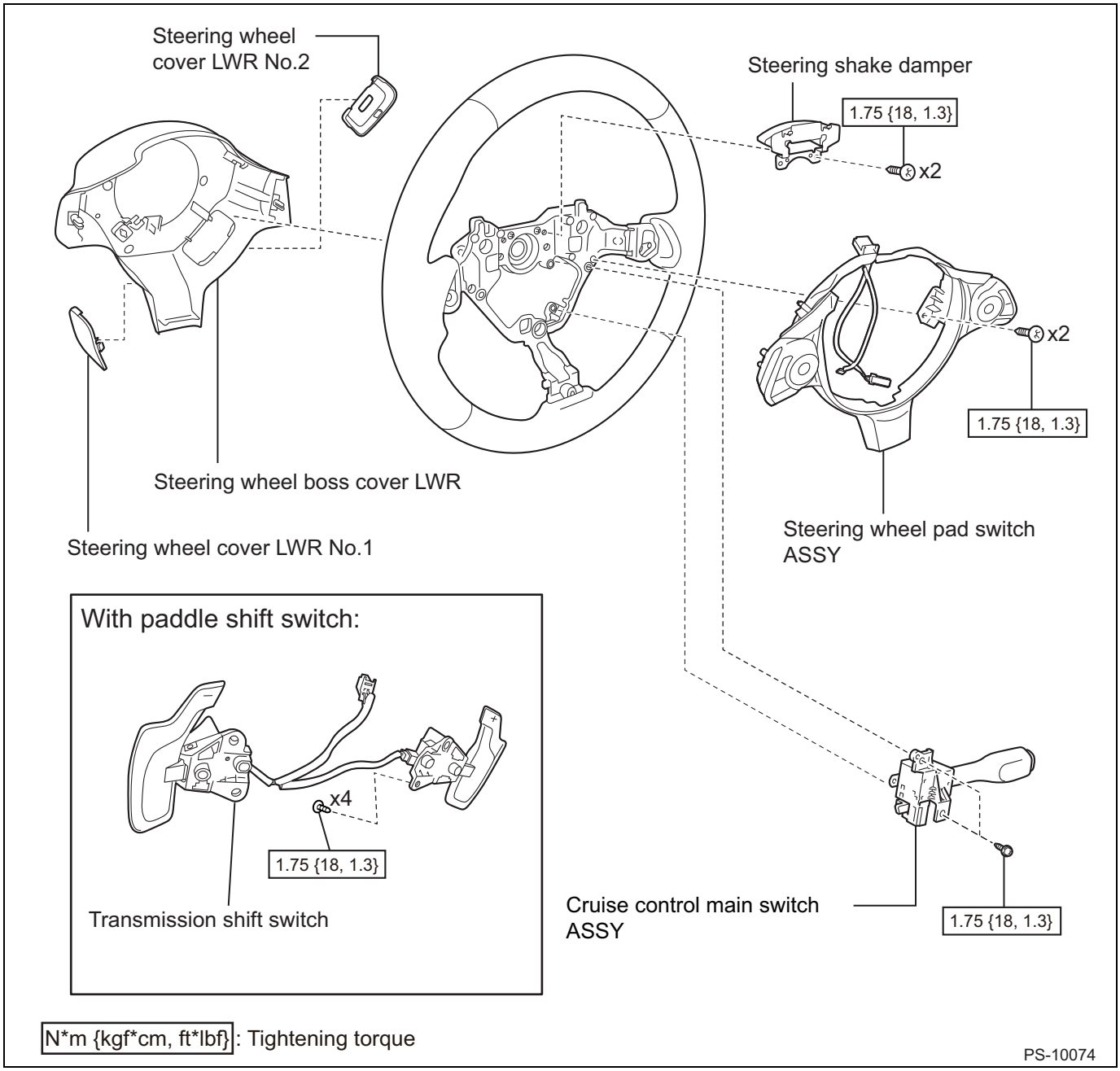

Removal

1. Correct handling and precautions for operation
   WARNING:
   As this maintenance procedure may have an effect on the SRS airbag system, be sure to check the SRS airbag system precautions before commencing work. (Refer to RS - 5)
2. Confirm that the front tires are in the straight-ahead position.
3. Disconnection of the battery ground terminal
   WARNING:
   As the airbag and pretensioner system is equipped with a backup power supply, if you start work within 60 seconds of disconnecting the battery ground terminal, the airbag may accidentally deploy.
   CAUTION:
   To prevent damage to the moldings, completely wind down both the driver's and passenger's door windows.
4. Removal of the driver's airbag module (Refer to RS - 246)

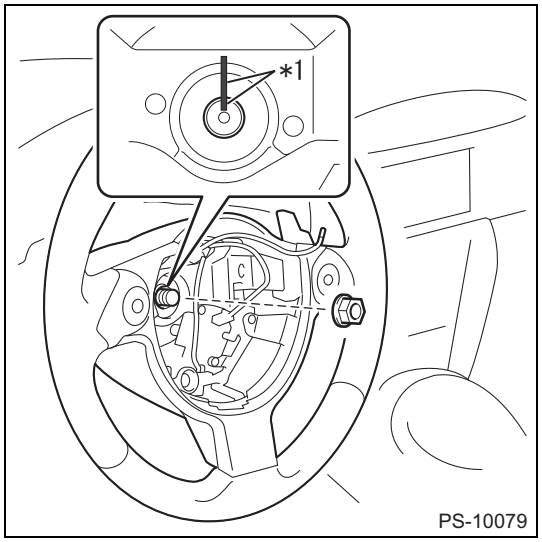

5. Removal of the steering wheel ASSY
   (1) Undo the nut and place an alignment mark over the steering wheel ASSY and steering column ASSY.

Captions in illustration

*1	Alignment marks

   (2) Disconnect each connector from the steering roll connector.
   (3) Use a steering wheel puller to remove the steering wheel ASSY.

6. Removal of the transmission shift switch (with paddle shifter) (Refer to AT - 212)
7. Removal of the cruise control main switch. (Refer to CC - 28)
8. Removal of steering pad switch (Refer to SR - 70)

Disassembly

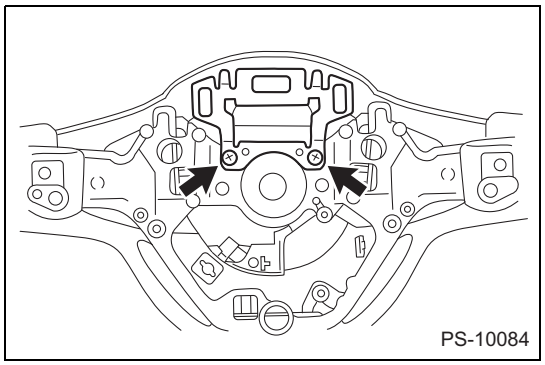

1. Removal of the steering shake damper
   (1) Undo the two screws to remove the steering shake damper from the steering wheel ASSY.

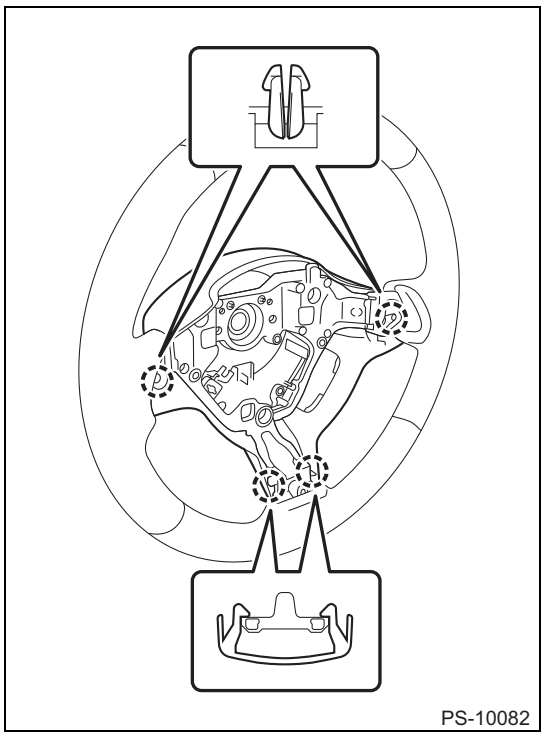

2. Removal of the steering wheel boss cover LWR
   (1) Unhook the four tabs to remove the steering wheel boss cover LWR from the steering wheel ASSY.

Assembly

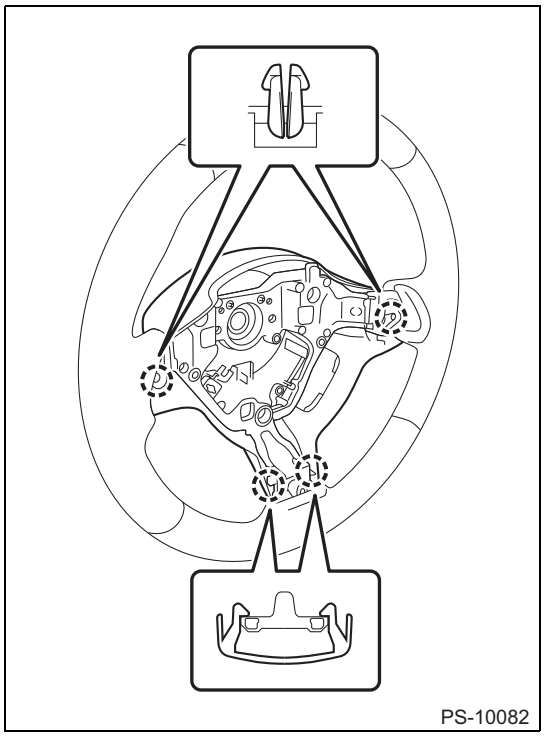

1. Installation of the steering wheel boss cover LWR
   (1) Engage the four tabs and install the steering wheel boss cover LWR onto the steering wheel ASSY.

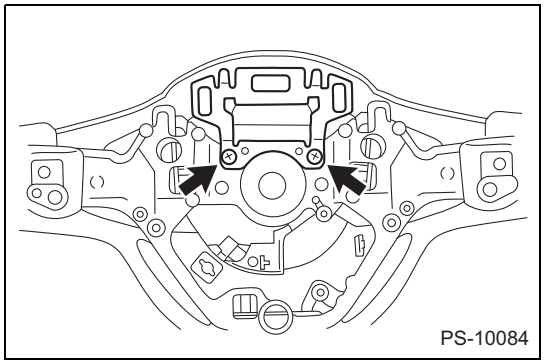

2. Installation of the steering shake damper
   (1) Install the steering shake damper onto the steering wheel ASSY and fasten the two screws.
   Standard value:T=1.75N·m {18kgf·cm} {1.3ft·lbf}

Installation

1. Confirm that the front tires are in the straight-ahead position.
2. Steering roll connector centering (Refer to RS - 252)
3. Installation of steering pad switch (Refer to SR - 70)
4. Installation of the cruise control main switch (Refer to CC - 29)
5. Installation of the transmission shift switch (with paddle shifter) (Refer to AT - 213)
6. Installation of the steering wheel ASSY
   (1) Line up the alignment marks and install the steering wheel ASSY onto the steering column ASSY.
   (2) Install the nut.
   Standard value:T=39N·m {398kgf·cm} {28.8ft·lbf}
   (3) Connect each connector to the steering roll connector.
7. Installation of the driver's airbag module (Refer to RS - 248)
8. Connection of the battery ground terminal
   Standard value:T=6.0N·m {61kgf·cm} {4.4ft·lbf}
9. Confirm the steering wheel ASSY center position.
10. Inspection of airbag warning light (Refer to RS - 53)
11. VDC sensor mid point setting (Refer to BC - 15)

Steering pad switch

Exploded view

SR

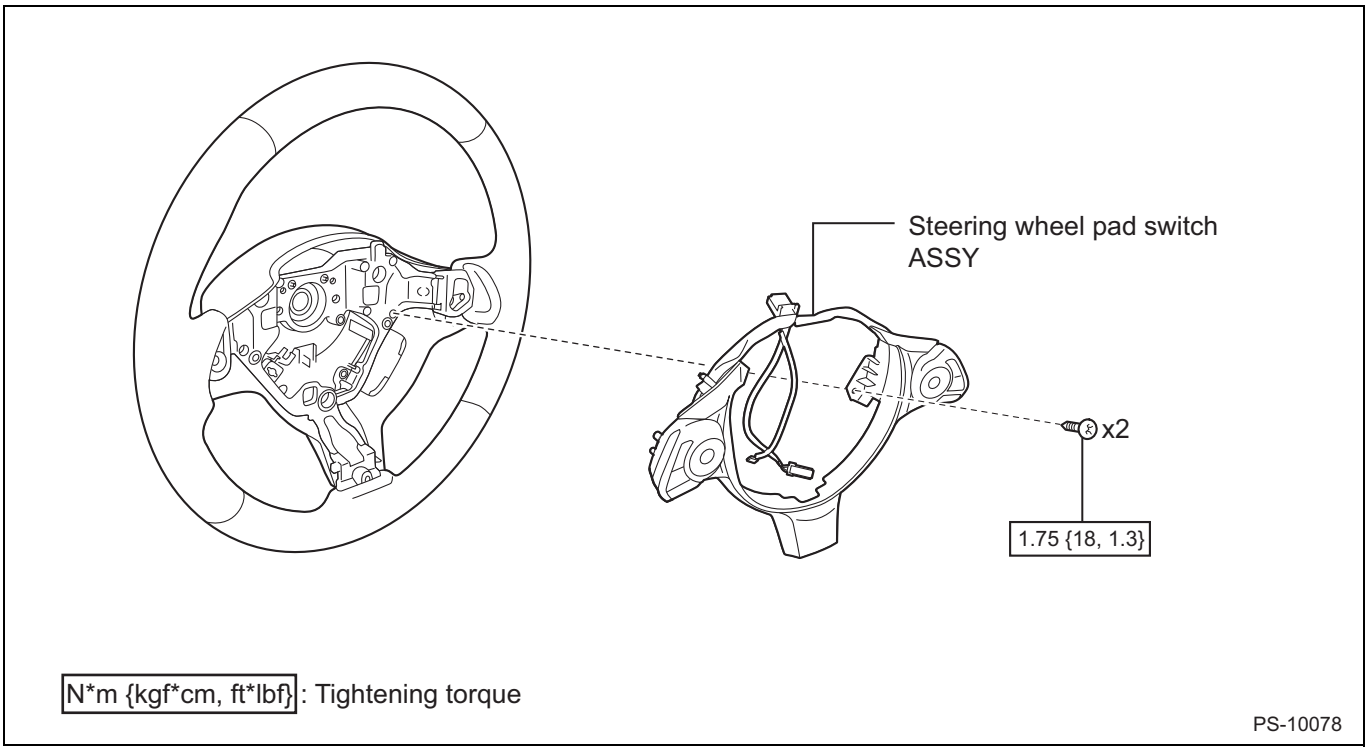

Removal

1. Handling/working precautions
   WARNING:
   As this maintenance procedure may have an effect on the SRS airbag system, be sure to check the SRS airbag system precautions before commencing work. (Refer to RS - 5)
2. Disconnection of the battery ground terminal
   WARNING:
   As the airbag and pretensioner system is equipped with a backup power supply, if you start work within 60 seconds of disconnecting the battery ground terminal, the airbag may accidentally deploy.
   CAUTION:
   To prevent damage to the moldings, completely wind down both the driver's and passenger's door windows.
3. Removal of the driver's airbag module (Refer to RS - 246)
4. Removal of steering pad switch ASSY

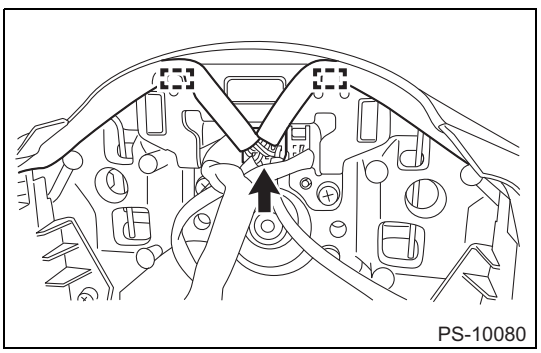

(1) Disconnect the connector from the spiral cable SUB-ASSY.

(2) Release the guide.

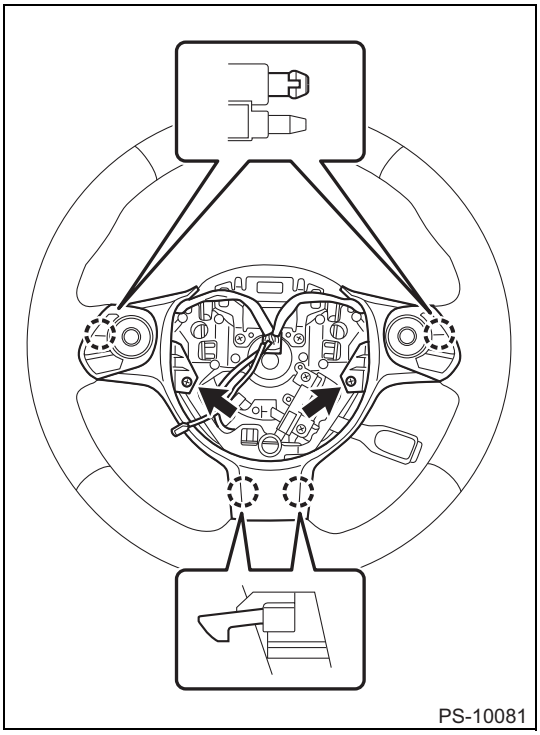

(3) Remove 2 screws.
Standard value:T=1.75N·m {18kgf·cm} {1.3ft·lbf}

(4) Release the 4 tabs and remove the steering pad switch ASSY.

Installation

1. Installation of steering pad switch ASSY
   (1) Fit in the 4 tabs and install the steering pad switch ASSY.
   (2) Install the two screws.
   (3) Fit in the guide.
   (4) Connect the connector to the spiral cable SUB-ASSY.
2. Installation of the driver's airbag module (Refer to RS - 248)
3. Connection of the battery ground terminal
   Standard value:T=6.0N·m {61kgf·cm} {4.4ft·lbf}
4. Inspection of airbag warning light (Refer to RS - 53)

Unit inspection

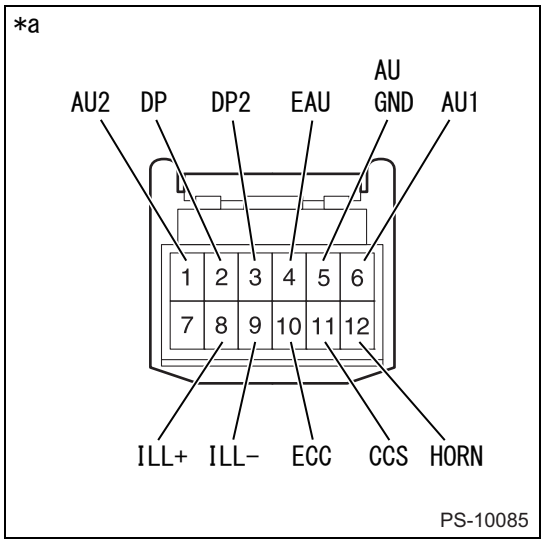

1. Inspection of steering pad switch ASSY
   (1) Measurement of the resistance of the steering pad switch ASSY
   (a)Measure the resistance between connector terminals when the steering pad switch ASSY is operated.
   Resistance

Inspection terminals (Terminal symbol)	Inspection conditions	Standard value
6 (AU1) - 5 (AU GND)*1	Do not press the switch. Press the VOL+ switch. Press the VOL- switch. Press the SEEK+ switch. Press the SEEK- switch.	Approx. 100 kΩ Less than 2.5 ΩApprox. 50 ΩApprox. 120 ΩApprox. 230 Ω
1 (AU2) - 5 (AU GND)*1	Do not press the switch. Press the MUTE/ENTER switch. Press the TALK switch. Press the SOURCE switch. Press the ON HOOK switch. Press the OFF HOOK switch.	Approx. 100 kΩ Less than 2.5 ΩApprox. 50 ΩApprox. 120 ΩApprox. 230 ΩApprox. 430 Ω

SR

Inspection terminals (Terminal symbol)	Inspection conditions	Standard value
6 (AU1) - 5 (AU GND)*2	Do not press the switch. Press the SEEK+ switch. Press the SEEK- switch. Press the VOL+ switch. Press the VOL- switch.	Approx. 100 kΩ Less than 2.5 ΩApprox. 330 ΩApprox. 1000 ΩApprox. 3200 Ω
1 (AU2) - 5 (AU GND)*2	Do not press the switch. Press the SOURCE switch. Press the OFF HOOK switch. Press the ON HOOK switch. Press the TALK switch.	Approx. 100 kΩ Less than 2.5 ΩApprox. 330 ΩApprox. 1000 ΩApprox. 3200 Ω
3 (DP2) - 4 (EAU)	Do not press the switch. Press the ENTER switch. Press the BACK switch.	Approx. 100 kΩ Less than 2.5 ΩApprox. 1000 Ω
2 (DP) - 4 (EAU)	Do not press the switch. Press the LEFT switch. Press the UP switch. Press the DOWN switch. Press the RIGHT switch.	Approx. 100 kΩ Less than 2.5 ΩApprox. 330 ΩApprox. 1000 ΩApprox. 3200 Ω

*1: With a radio & display receiver

*2: With a navigation receiver

(2) Inspection of LED light (night-time illumination)

(a) Inspect if the LED light turns on when battery voltage is applied to each connector terminal.

Criteria

Inspection terminals	Criteria
Battery positive →8 Battery ground →9	Illuminates

Captions in illustration

*a	Connector not connected (Steering pad switch ASSY)

Steering gear / linkage

Steering linkage

Exploded view SL-2
Removal SL-6
Disassembly SL-9
Inspection SL-10
Assembly SL-12
Installation SL-14

Steering linkage

Exploded view

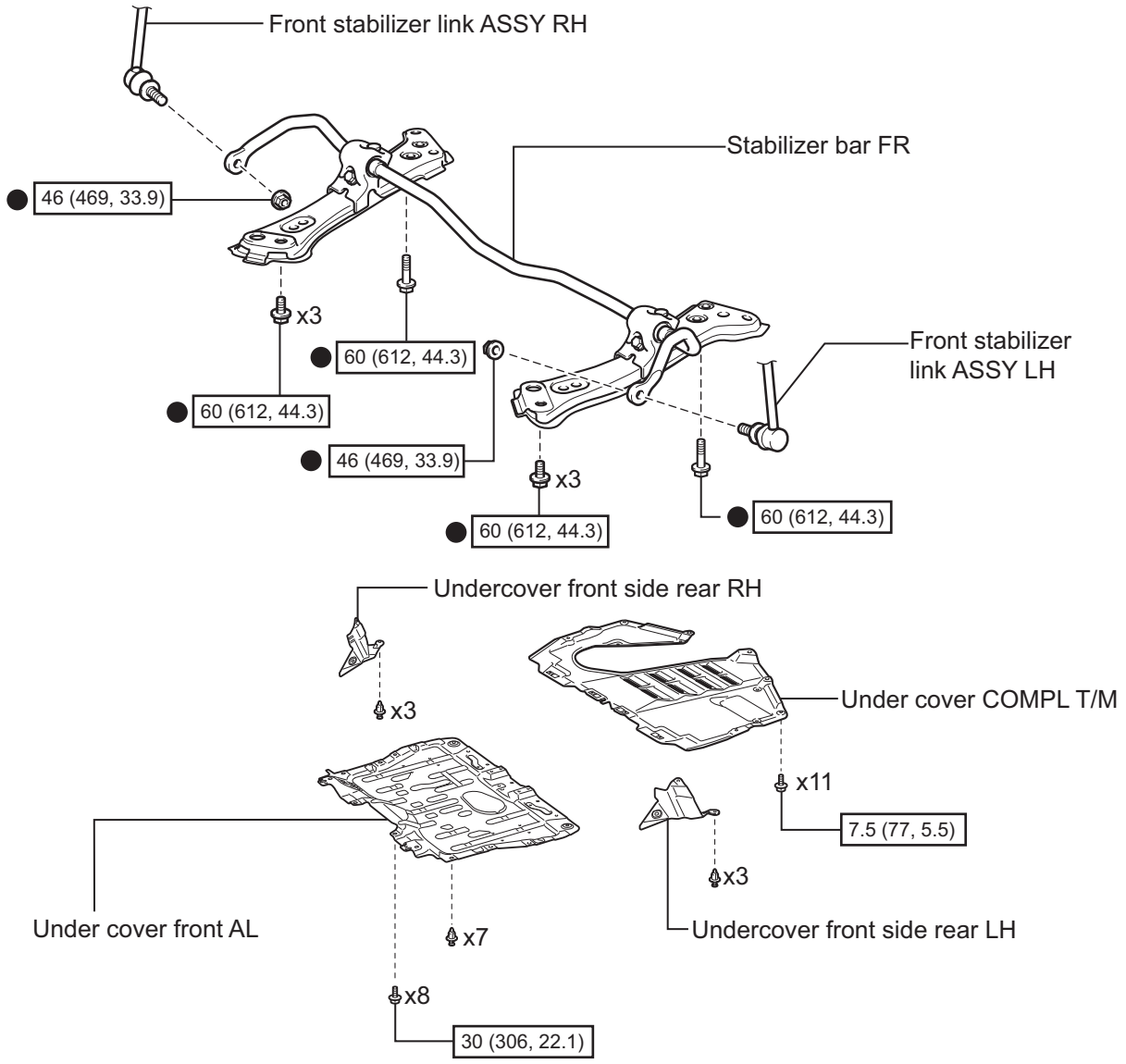

N*m {kgf*cm,ft*lbf} : Tightening torque

● Non-reusable parts

PS-10230

SL

tS model

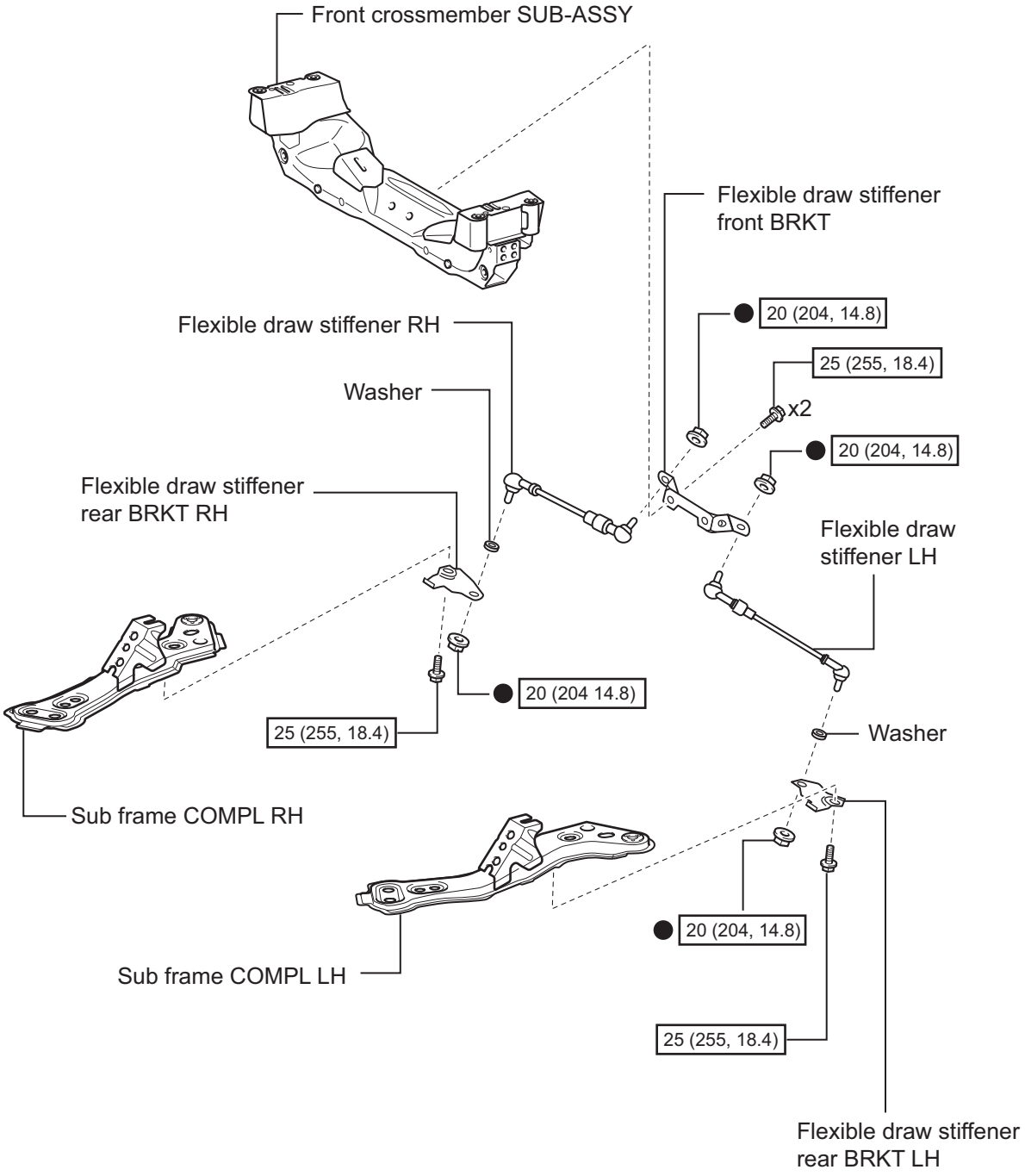

N*m {kgf*cm,ft*lbf} : Tightening torque

● Non-reusable parts

FS-10139

SL

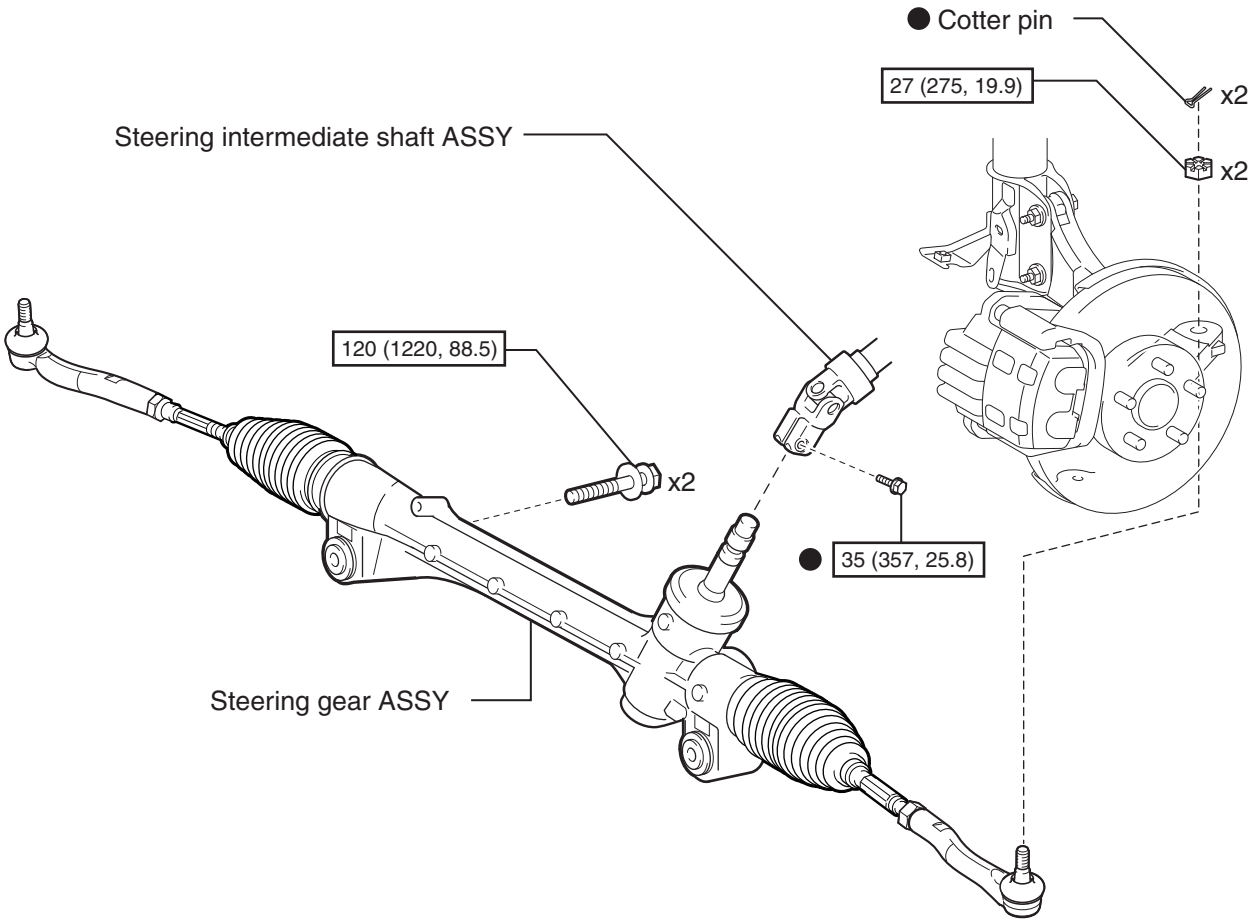

N•m {kgf•cm, ft•lbf} : Tightening torque

● Non-reusable parts

PS-01594

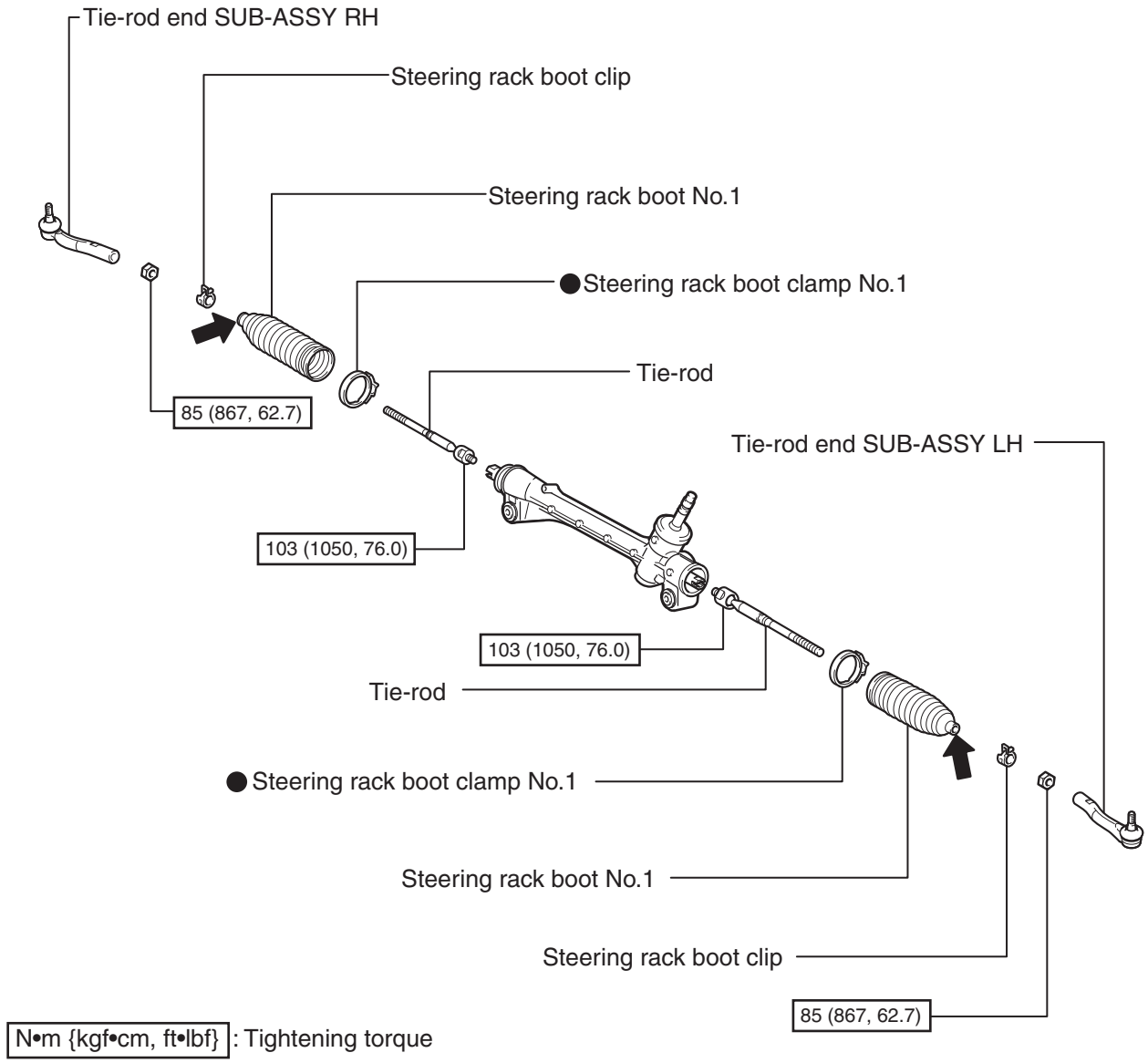

N•m {kgf•cm, ft•lbf} : Tightening torque

● Non-reusable parts

⬅ Toshiba silicon TSM650 or Idemitsu Autorex A or equivalent

PS-01653

SL

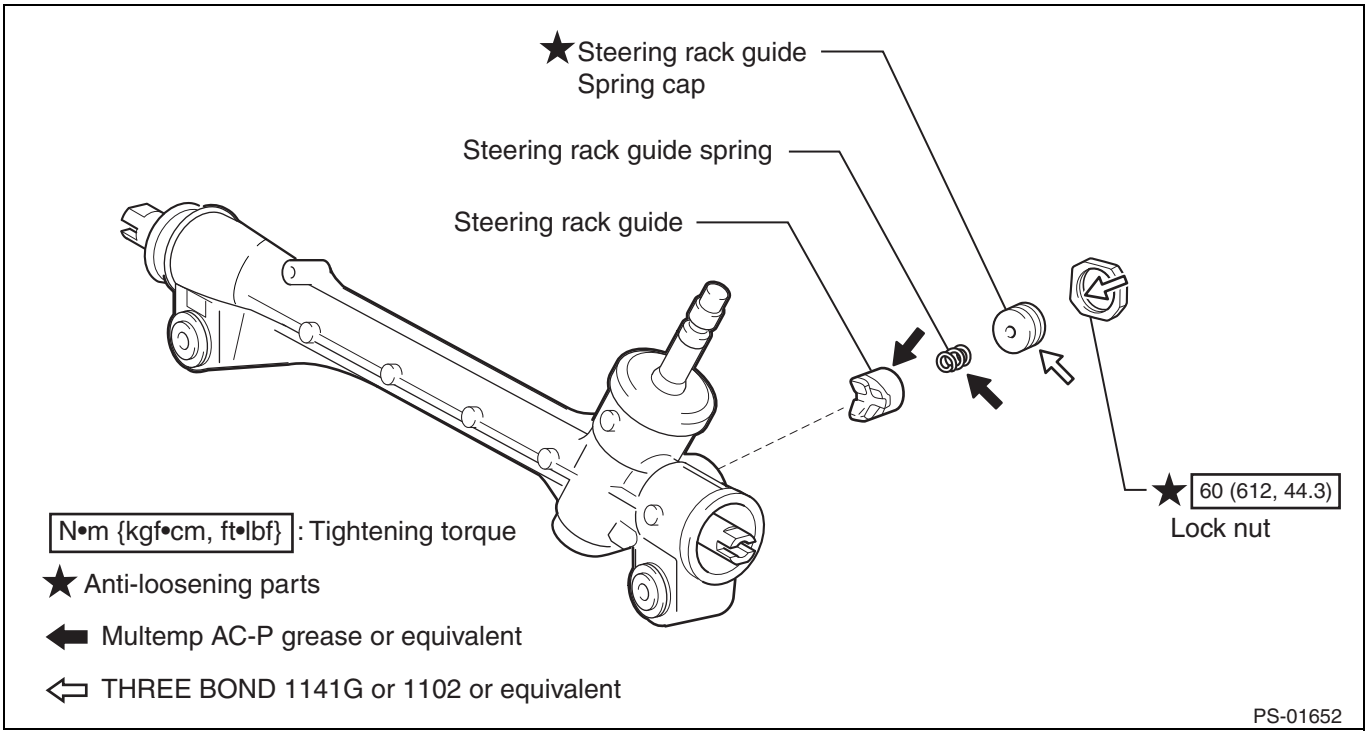

Removal

1. Removal of undercover front AL (Refer to IE - 39)
2. Removal of undercover COMPL T/M (Refer to IE - 40)
3. Loosen the steering intermediate shaft ASSY No.2 bolt.
   CAUTION:
   Do not completely remove this bolt at this time.

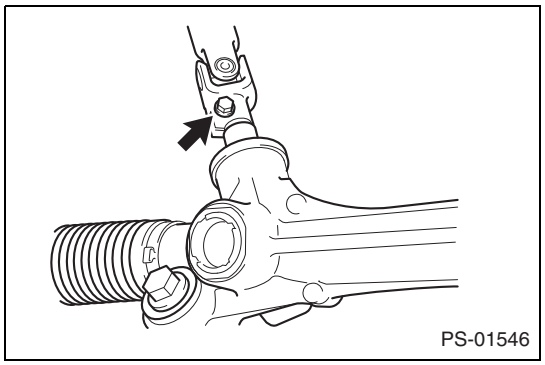

4. Confirm that the front tires are in the straight-ahead position.

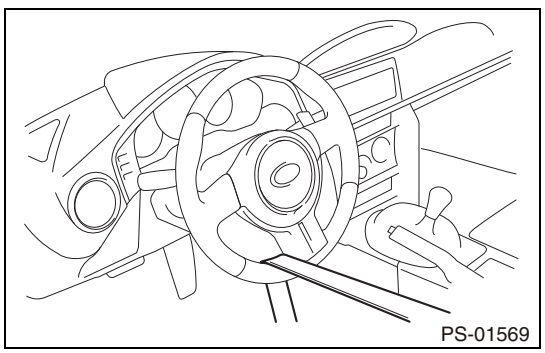

5. Securing the steering wheel ASSY
   (1) To prevent the spiral cable from becoming disconnected, pass the seat belt through the steering wheel ASSY to ensure that it doesn't rotate.
6. Removal of the front tires

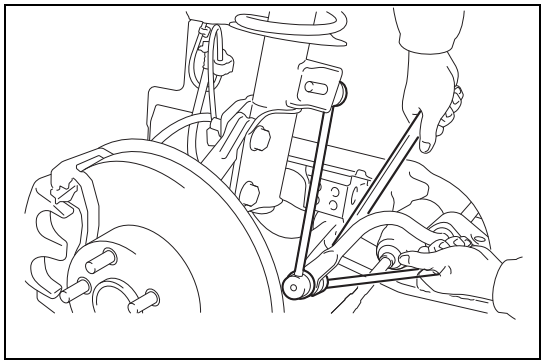

7. Disconnection of the front stabilizer link ASSY LH
   (1) Remove the under cover front side rear LH.
   (2) Secure the stud bolt and remove the nut.
   (3) Disconnect the front stabilizer link ASSY LH from the stabilizer bar FR.

8. Disconnection of the front stabilizer link ASSY RH
   NOTE:
   Service the RH side in the same procedure as the LH side.

9. Removal of flexible draw stiffener ASSY (tS model) (Refer to FP - 32)

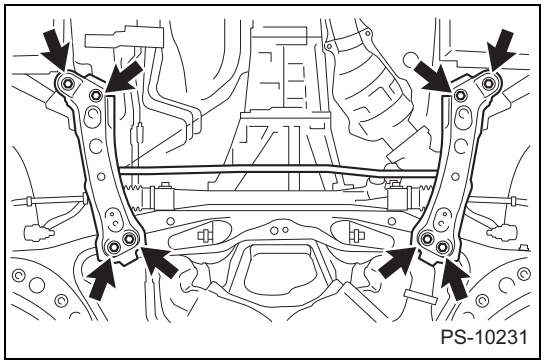

10. Removal of the stabilizer bar FR
    (1) Undo the 8 bolts, and remove the stabilizer bar FR as a unit with the subframe COMPL LH and RH from the front suspension cross member.

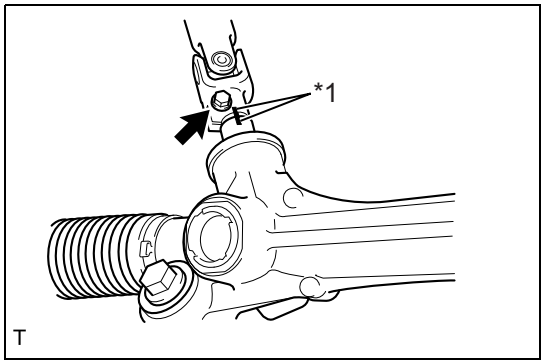

11. Disconnect the steering intermediate shaft ASSY No.2.
    (1) Place an alignment mark across the steering intermediate shaft ASSY No.2 and the steering gear ASSY.

Captions in illustration

*1	Alignment marks

    (2) Undo the bolt and disconnect the steering intermediate shaft ASSY No.2 from the steering gear ASSY.

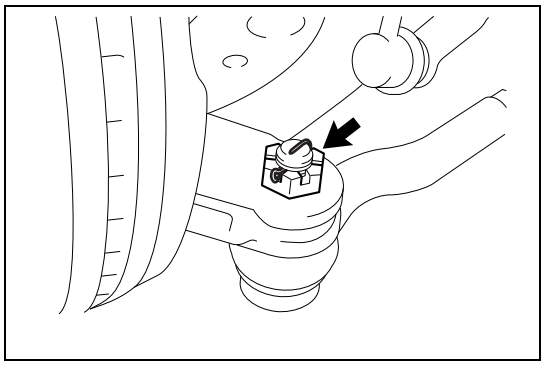

12. Disconnection of the tie-rod end SUB-ASSY LH
    (1) Pull out the cotter pin and remove the castle nut.
    (2) Use a tie-rod ball joint puller to detach the tie-rod end SUB-ASSY LH from the steering knuckle.

SL

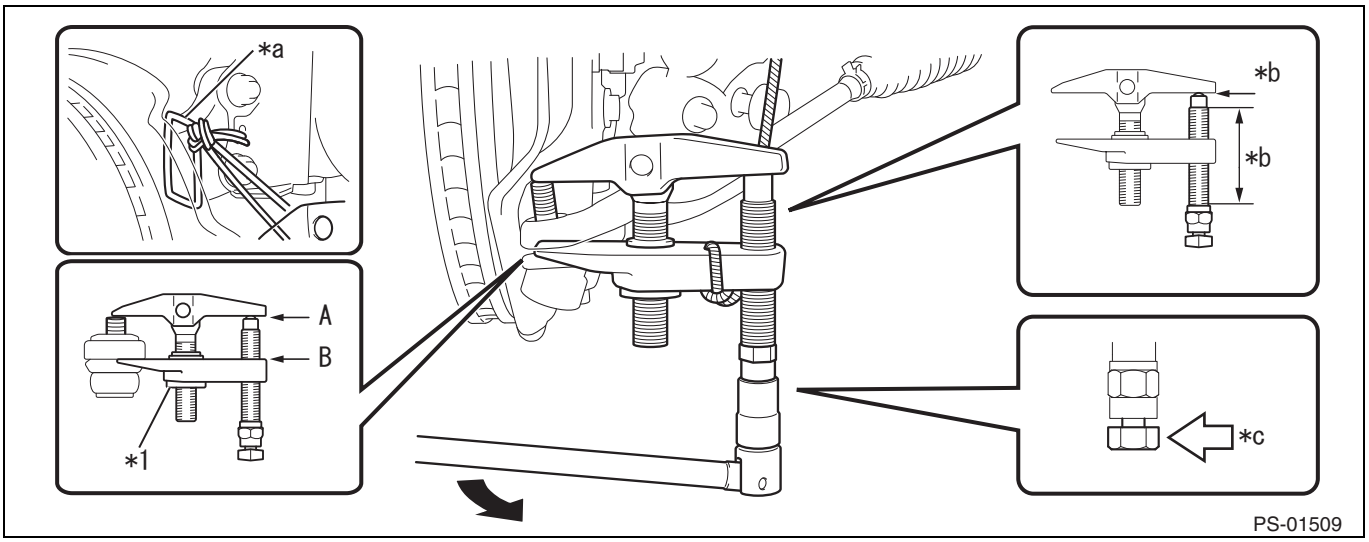

Captions in illustration

*1	Nut	-	-
*a	Tie the string to reduce slack.	*b	Lubricant coating area.
*c	The wrench is used here.	-	-

WARNING:
Apply lubricant to the bolt tip and the threaded area of the tie-rod ball joint puller.
CAUTION:
- To prevent the tie-rod ball joint puller from falling off, be sure to tie the string to the steering knuckle so that there is no slack.
- To prevent damage to the dust cover, at the center part nut, attach the tie-rod ball joint puller while ensuring that A and B are parallel.
- Be sure to use the wrench in the position shown in the diagram.
- Be careful not to damage the tie-rod end SUB-ASSY LH ball joint boot.
- Be careful not to damage the steering knuckle.
- Be careful not to damage the disc brake dust cover FR.

13. Disconnection of the tie-rod end SUB-ASSY RH
    NOTE:
    Service the RH side in the same procedure as the LH side.

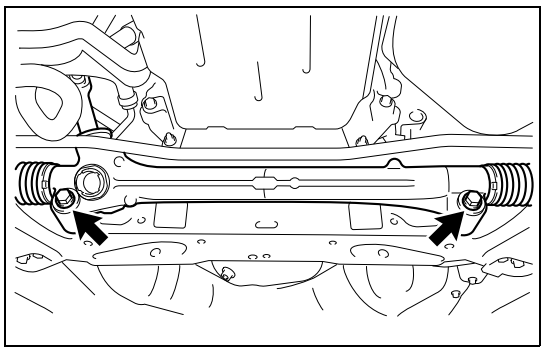

14. Removal of the steering gear ASSY
    (1) Undo the 2 bolts and remove the steering gear ASSY.

Disassembly

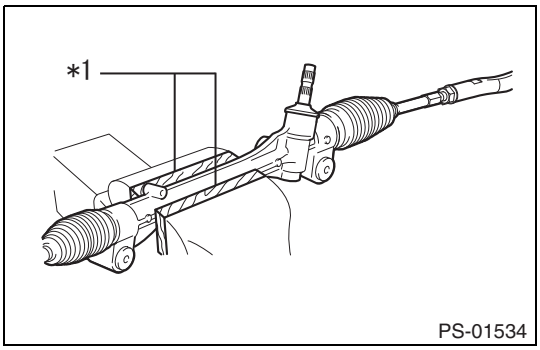

1. Securing the steering gear ASSY
   (1) Using wooden blocks, secure the steering gear ASSY in a vise.

Captions in illustration

*1	Wooden block

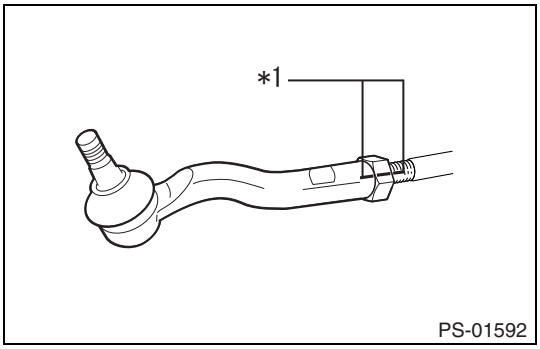

2. Removal of the tie-rod end SUB-ASSY LH
   (1) Place an alignment mark across the tie-rod end SUB-ASSY LH and the tie-rod.

Captions in illustration

*1	Alignment marks

   (2) Removal of the tie-rod end SUB-ASSY LH and lock nut

3. Remove the tie-rod end SUB-ASSY RH.
   NOTE:
   Service the RH side in the same procedure as the LH side.
4. Removal of the steering rack boot clip (LH side installation position)
   (1) Use pliers to remove the steering rack boot clip.
5. Removal of the steering rack boot clip (RH side installation position)
   NOTE:
   Service the RH side in the same procedure as the LH side.

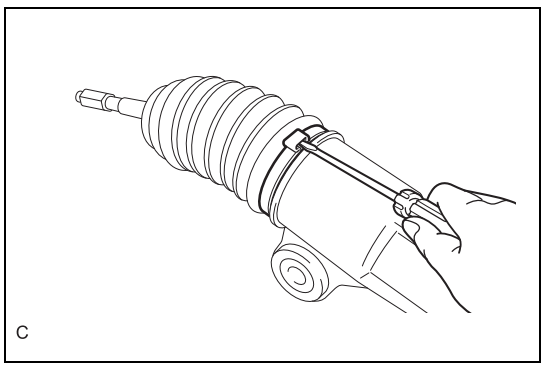

6. Removal of the steering rack boot clamp No.1 (LH side installation position)
   (1) Use a flat tip screwdriver to open up the steering rack boot clamp No.1 crimping.
   CAUTION:
   - Be careful not to damage the steering rack boot No.1.
   - Replace the steering rack boot No.1 with a new part of you find any cracks, damage, or deterioration.
7. Removal of the steering rack boot clamp No.1 (RH side installation position)
   NOTE:
   Service the RH side in the same procedure as the LH side.
8. Removal of the steering rack boot No.1 (LH side installation position)
   (1) Remove the steering rack boot No.1 from the rack housing.
9. Removal of the steering rack boot No.1 (RH side installation position)
   NOTE:
   Service the RH side in the same procedure as the LH side.
10. Remove the tie-rod.
    (1) Use 2 SSTs to remove the tie-rod on the RH side.
    SST 09922-10010
    CAUTION:
    Be sure to only use SSTs in the correct direction.

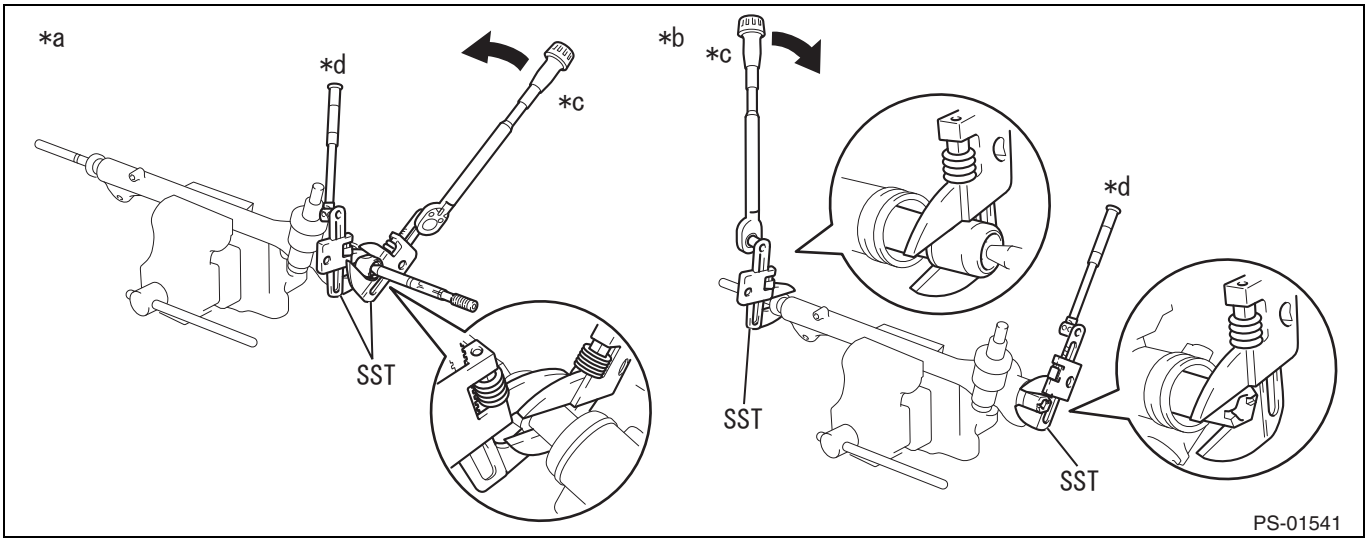

Captions in illustration

*a	LH side	*b	RH side
*c	Drive	*d	Hold

(2) Use one SST to secure the steering on the rack RH side. Use the other SST to remove the tie-rod on the LH side.
SST 09922-10010
CAUTION:
Be sure to only use SSTs in the correct direction.

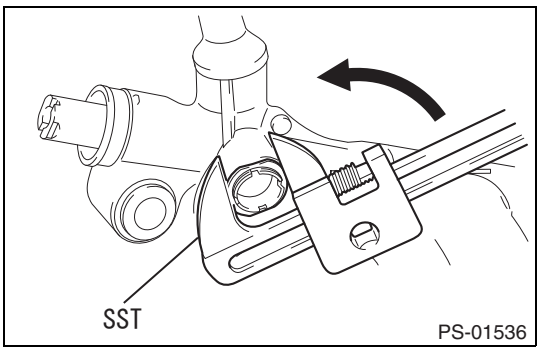

11. Remove the steering rack guide spring.
(1) Use a SST to remove the lock nut.
SST 09922-10010
CAUTION:
Be sure to only use SSTs in the correct direction.

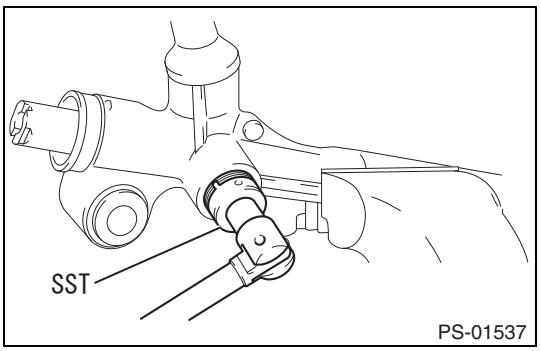

(2) Use a SST to remove the steering rack guide spring cap.
SST 34299CA000
(3) Remove the steering rack guide spring.
NOTE:
As the steering rack guide is a non-disassembly part, the disassembly stops here.

Inspection

1. Inspect the tie-rod end SUB-ASSY LH.
(1) Secure the tie-rod ASSY LH ball joint part in a vise between aluminium plates.
CAUTION:
Do not close the vise too strongly.
(2) Swing and rotate the ball joint.
Criteria: There is no abnormal sticking or looseness during swing and rotation.
NOTE:
- If the criteria is not satisfied, replace the tie-rod end SUB-ASSY LH with a new part.

- If you notice any dust seal cracks, damage, or deterioration, replace the tie-rod end SUB-ASSY LH with a new part.

2. Inspect the tie-rod end SUB-ASSY RH.
   NOTE:
   Service the RH side in the same procedure as the LH side.
3. Inspection of the total preload
   (1) To prevent steering rack overstroke, temporarily fit the left and right tie-rods.

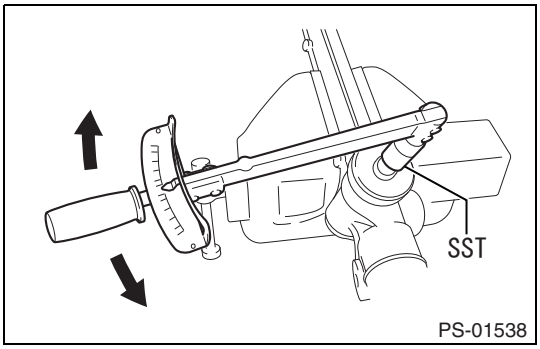

(2) Use a SST to rotate the pinion shaft at a rate of 1 revolution every 3 to 5 seconds, and check steering gear ASSY total preload.
SST 09616-00011
Standard value:T=0.9 - 1.6N·m {9.2 - 16.3kgf·cm} {0.66 - 1.18 ft·lbf} (While rotating)
CAUTION:
- Perform the check at the steering rack neutral position.
- Be careful not to move the steering rack the full stroke.

NOTE:
If it is not within the specified value, adjust the total preload.

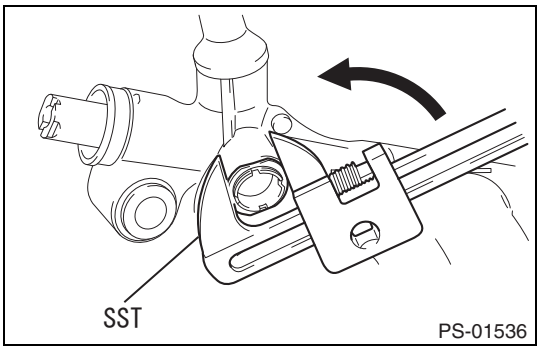

4. Adjustment of the total preload
   (1) Use a SST to remove the lock nut.
   SST 09922-10010
   CAUTION:
   Be sure to only use SSTs in the correct direction.

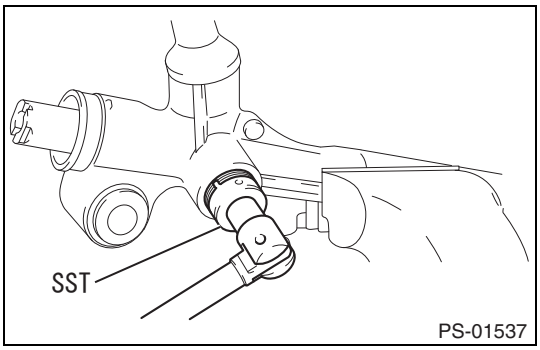

(2) Use a SST to remove the steering rack guide spring cap.
SST 34299CA000
(3) Clean the threaded portion of the steering rack housing and the steering rack guide spring cap, and remove any oil with proper detergent.
(4) Apply Three Bond 1141G, Three Bond 1102 or the equivalent to the threaded portion of the steering rack guide spring cap, and temporarily tighten it.

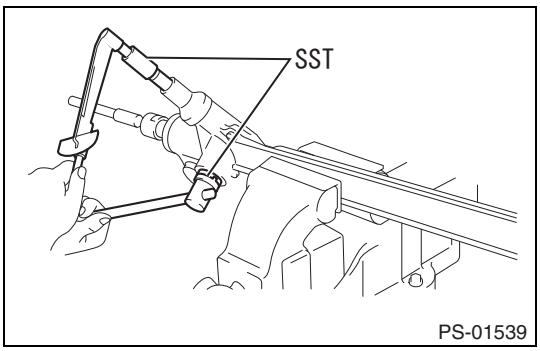

(5) In order to ensure that the rotational torque of the pinion shaft is at the specified value, tighten the steering rack guide spring cap, using the SST.
SST 09616-00011, 34299CA000
Standard value:T=0.9 - 1.6N·m {9.2 - 16.3kgf·cm} {0.66 - 1.18 ft·lbf} (While rotating)
(6) Clean the threaded portion of the lock nut and remove any oil with proper detergent.
(7) Apply Three Bond 1141G, Three Bond 1102 or the equivalent to the threaded portion of the lock nut.

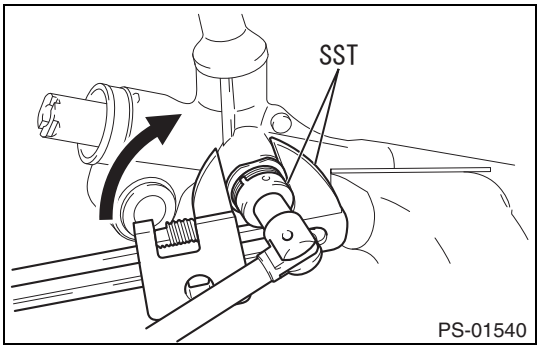

(8) Secure the steering guide spring cap and tighten the lock nut with a SST.
SST 09922-10010, 34299CA000
Standard value:T=60N·m {612kgf·cm} {44.3ft·lbf}
CAUTION:
- When you connect a torque wrench to the SST and tighten it while it is extended the total length, continuing until the torque wrench reading reaches the prescribed value will result in the actual tightening torque being larger than desired. (Refer to IN - 6)
- Be sure to only use SSTs in the correct direction.

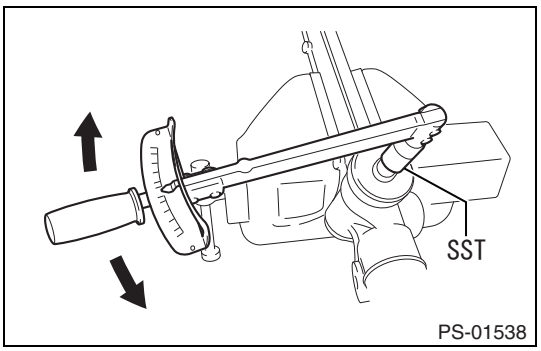

(9) Use a SST to rotate the pinion shaft at a rate of 1 revolution every 3 to 5 seconds, and check steering gear ASSY total preload.
SST 09616-00011
Standard value:T=0.9 - 1.6N·m {9.2 - 16.3kgf·cm} {0.66 - 1.18 ft·lbf} (While rotating)
CAUTION:
- Perform the check at the steering rack neutral position.
- Be careful not to move the steering rack the full stroke.
- After the inspection is completed, set it back to the neutral position.

Assembly

1. Install the steering rack guide spring
   (1) Apply Multemp AC-P grease or the equivalent to the rear surface of the steering rack guide and steering rack guide spring.
   (2) Install the steering rack guide spring onto the steering rack housing.
   (3) Clean the threaded portion of the steering rack housing and the steering rack guide spring cap, and remove any oil with proper detergent.
   (4) Apply Three Bond 1141G, Three Bond 1102 or the equivalent to the threaded portion of the steering rack guide spring cap, and temporarily tighten it.
2. Adjustment of the total preload (Refer to SL - 11)
3. Install the tie-rod
   (1) Use one SST to secure the steering rack on the RH side. Use the other SST to install the tie-rod (LH side).
   SST 09922-10010

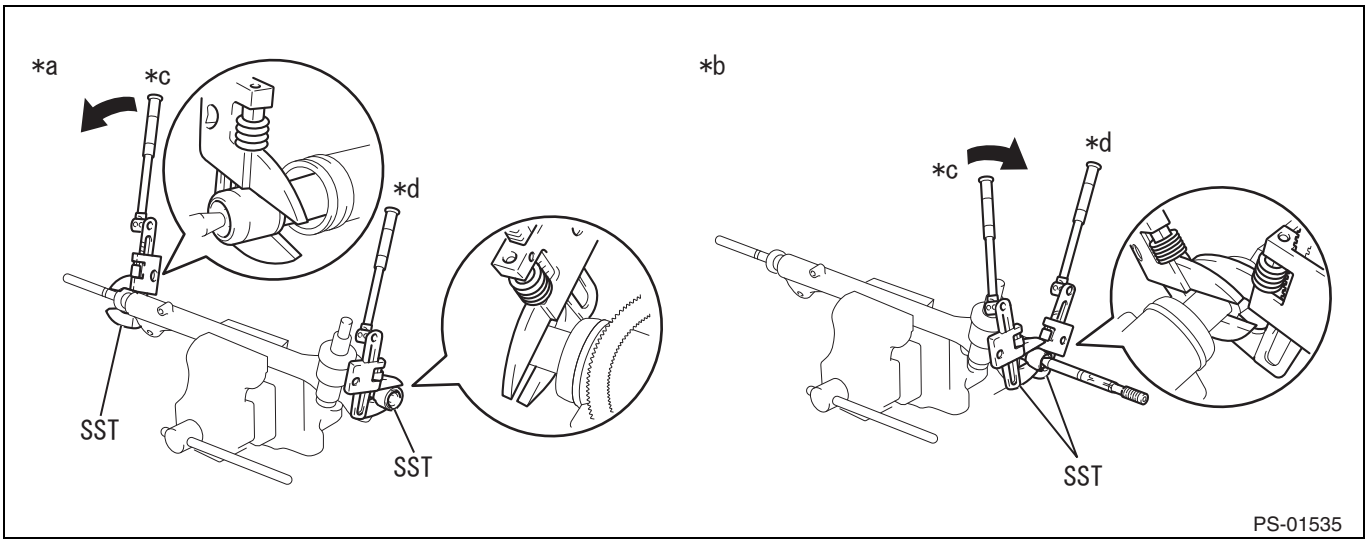

Captions in illustration

*a	RH side	*b	LH side
*c	Drive	*d	Hold

Standard value:T=103N·m {1050kgf·cm} {76.0ft·lbf}

CAUTION:

- When you connect a torque wrench to the SST and tighten it while it is extended the total length, continuing until the torque wrench reading reaches the prescribed value will result in the actual tightening torque being larger than desired. (Refer to IN - 6)
- Be sure to only use SSTs in the correct direction.
- Firmly secure the steering rack.

(2) Use 2 SSTs to install the tie-rod (RH side).

SST 09922-10010

Standard value:T=103N·m {1050kgf·cm} {76.0ft·lbf}

CAUTION:

- When you connect a torque wrench to the SST and tighten it while it is extended the total length, continuing until the torque wrench reading reaches the prescribed value will result in the actual tightening torque being larger than desired. (Refer to IN - 6)
- Be sure to only use SSTs in the correct direction.
- Firmly secure the steering rack.

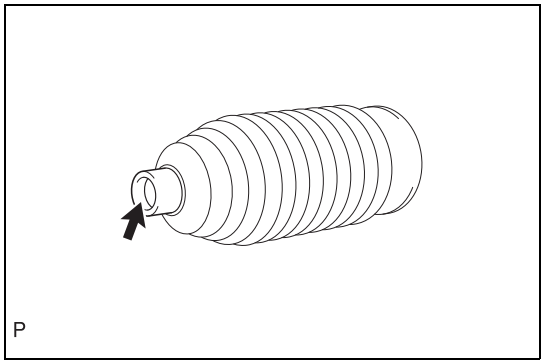

4. Install the steering rack boot No.1 (LH side installation position).
   (1) Apply Toshiba silicon TSM650, Idemitsu Autorex A or the equivalent to the inside of the smaller opening of the steering rack boot No.1.

Captions in illustration

➡	Toshiba silicone TSM650, Idemitsu Autorex A or equivalent

   (2) Install the steering rack boot No. 1 into the groove in the rack housing.

   CAUTION:

   - Be careful not to deform the steering rack boot clamp.
   - Confirm that there are no foreign objects or rust.
   - Replace the steering rack boot No.1 with a new part of you find any cracks, damage, or deterioration.
   - For the steering rack boot NO.1, mount the smaller opening side to the tie rod groove first, and then mount the larger opening side to the rack housing groove.

5. Installation of the steering rack boot No.1 (RH side installation position)

   NOTE:

   Perform the same installation procedure on the RH side as with the LH side.

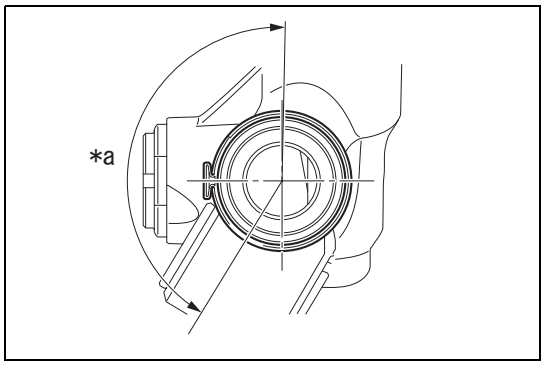

6. Installation of the steering rack boot clamp No.1 (LH side installation position).
   (1) Install a new steering rack boot clamp No.1 onto the area shown in the diagram of steering rack boot No.1.

   CAUTION:

   Be careful not to damage the steering rack boot No.1.

Captions in illustration

*a	150°

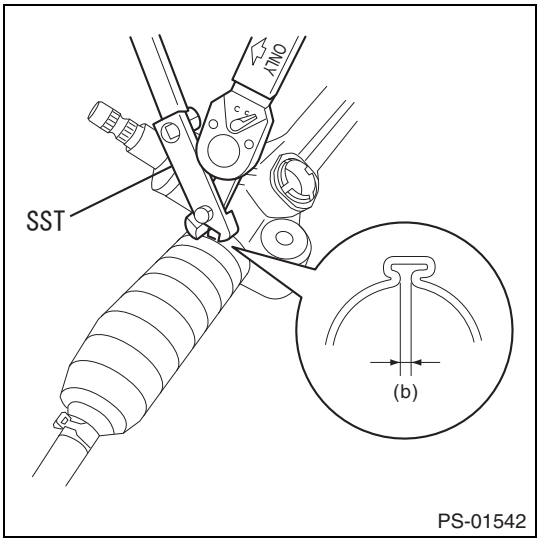

(2) Press and attach a SST onto the rack housing side and crimp it so that the steering rack boot clamp gap is at the specified value.
SST 28099AC000
Standard value: 2.0 mm {0.079 in} or less
CAUTION:
Confirm that the steering rack boot No.1 is not twisted.

7. Install the steering rack boot clamp No.1 (RH side installation position).
NOTE:
Perform the same installation procedure on the RH side as with the LH side.
8. Install the steering rack boot clip (LH side installation position).
(1) Use pliers to install the steering rack boot clip onto the steering rack boot No.1.
9. Install the steering rack boot clip (RH side installation position).
NOTE:
Perform the same installation procedure on the RH side as with the LH side.

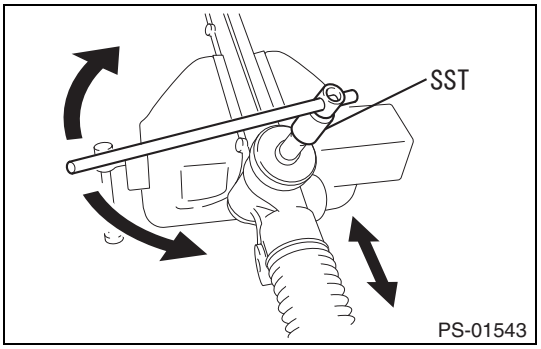

10. Inspection of the steering gear ASSY
(1) Use a SST to rotate the pinion and confirm that the steering rack boot expands and contracts smoothly.
SST 09616-00011
CAUTION:
After the inspection is completed, set it back to the neutral position.

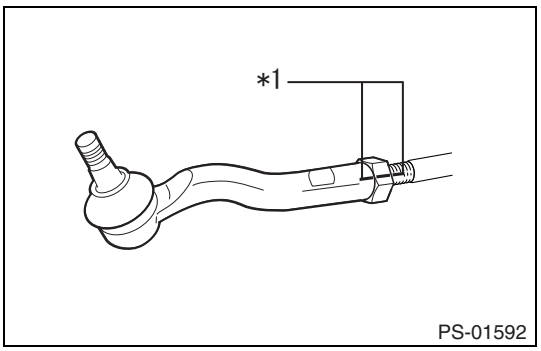

11. Installation of the tie-rod end SUB-ASSY LH
(1) Install the lock nut and tie-rod end SUB-ASSY LH up to the alignment mark position, and temporarily tighten the lock nut.

Captions in illustration

*1	Alignment marks

NOTE:
Perform the final tightening after toe-in adjustment has been completed.
Standard value:Temporary tightening
T=5.0N·m {51kgf·cm} {3.69ft·lbf}
Final tightening
T=85N·m {867kgf·cm} {62.7ft·lbf}

12. Installation of the tie-rod end SUB-ASSY RH
NOTE:
Perform the same installation procedure on the RH side as with the LH side.

Installation

1. Installation of the steering gear ASSY
(1) Install the steering gear ASSY onto the front suspension cross member with the 2 bolts.

Standard value:T=120N·m {1224kgf·cm} {88.5ft·lbf}

CAUTION:

Perform this installation after confirming that the stroke is at the central position.

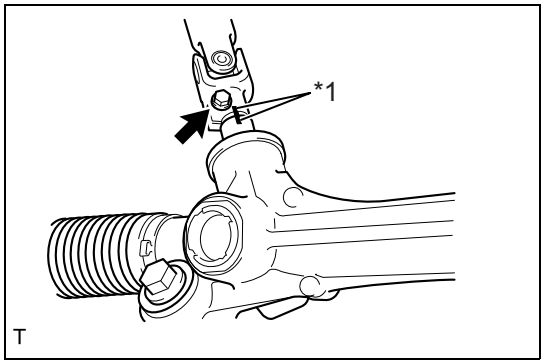

2. Connection of the steering intermediate shaft ASSY No.2
   (1) Line up the alignment marks and connect the steering intermediate shaft ASSY No.2 to the steering gear ASSY.

Captions in illustration

*1	Alignment marks

   (2) Attach a new bolt.
   Standard value:T=35N·m {357kgf·cm} {25.8ft·lbf}

3. Connection of the tie-rod end SUB-ASSY LH
   (1) Connect the tie-rod end SUB-ASSY LH to the steering knuckle, and attach the castle nut.
   Standard value:T=27N·m {275kgf·cm} {19.9ft·lbf}
   CAUTION:
   After tightening the castle nut, ensure that the cotter pin slot is aligned within 60° in the tightening direction.
   (2) Insert a new cotter pin.
4. Connection of the tie-rod end SUB-ASSY RH
   NOTE:
   Perform the same installation procedure on the RH side as with the LH side.
5. Installation of the stabilizer bar FR.
   (1) Using 8 new bolts, install the stabilizer bar FR as a unit with the subframe COMPL LH and RH to the front suspension cross member.
   Standard value:T=60N·m {612kgf·cm} {44.3ft·lbf}
6. Installation of flexible draw stiffener ASSY (tS model) (Refer to FP - 33)

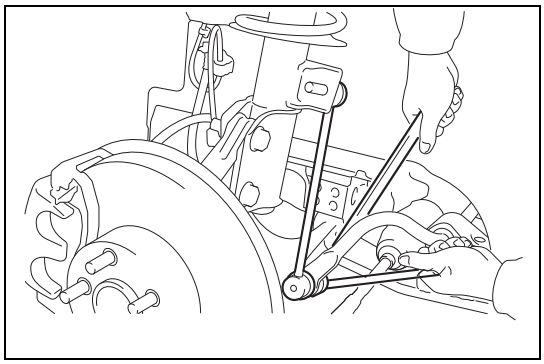

7. Connection of the front stabilizer link ASSY LH.
   (1) Connect the front stabilizer link ASSY LH to the stabilizer bar FR.
   (2) Secure the stud bolt and fasten new nut.
   Standard value:T=46N·m {469kgf·cm} {33.9ft·lbf}
   (3) Install the under cover front side rear LH.
8. Connection the front stabilizer link ASSY RH.
   NOTE:
   Service the RH side in the same procedure as the LH side.
9. Installation of undercover COMPL T/M (Refer to IE - 46)
10. Installation of front AL (Refer to IE - 46)
11. Installation of the front tires
    Standard value:T=120N·m {1224kgf·cm} {88.5ft·lbf}
12. Set down the vehicle.
13. Adjust the front wheel alignment (Refer to AL - 2)
14. VDC sensor mid point setting (Refer to BC - 15)
15. Settings during replacement and removal/installation of the parts (Refer to IN - 10)

SL

Audio system / visual system

Audio & visual system
Parts location AV-3
Circuit figure AV-5
Check of radio operation AV-9
Inspection of radio function AV-10
Inspection of navigation function AV-11

Radio receiver ASSY
Parts location AV-13
Removal AV-13
Installation AV-14

Navigation receiver ASSY
Parts location AV-15
Removal AV-15
Installation AV-16

Front door speaker
Exploded view AV-17
Removal AV-17
Installation AV-18
Unit inspection AV-18

Quarter trim speaker
Exploded view AV-19
Removal AV-20
Installation AV-20
Unit inspection AV-20

Instrument panel speaker
Exploded view AV-21
Removal AV-21
Installation AV-22
Unit inspection AV-22

Amplifier
Parts location AV-23
Removal AV-24
Installation AV-25

Amplifier antenna
Exploded view AV-26
Removal AV-26
Installation AV-27

Navigation antenna
Parts location AV-28
Removal AV-28
Installation AV-29

Antenna cord
Exploded view AV-30
Removal AV-30

Installation AV-31

Antenna cord No. 2
Exploded view AV-32
Removal AV-32
Installation AV-33

AUX unit
Parts location AV-34
Removal AV-35
Installation AV-35

Stereo jack adapter
Components AV-36
Removal AV-36
Installation AV-36

Microphone
Components AV-37
Removal AV-37
Installation AV-38

Noise filter
Exploded view AV-39
Removal AV-39
Installation AV-40
Unit inspection AV-40

Rear view camera ASSY
Exploded view AV-41
Removal AV-41
Installation AV-42
Inspection AV-42

Audio & visual system

Parts location

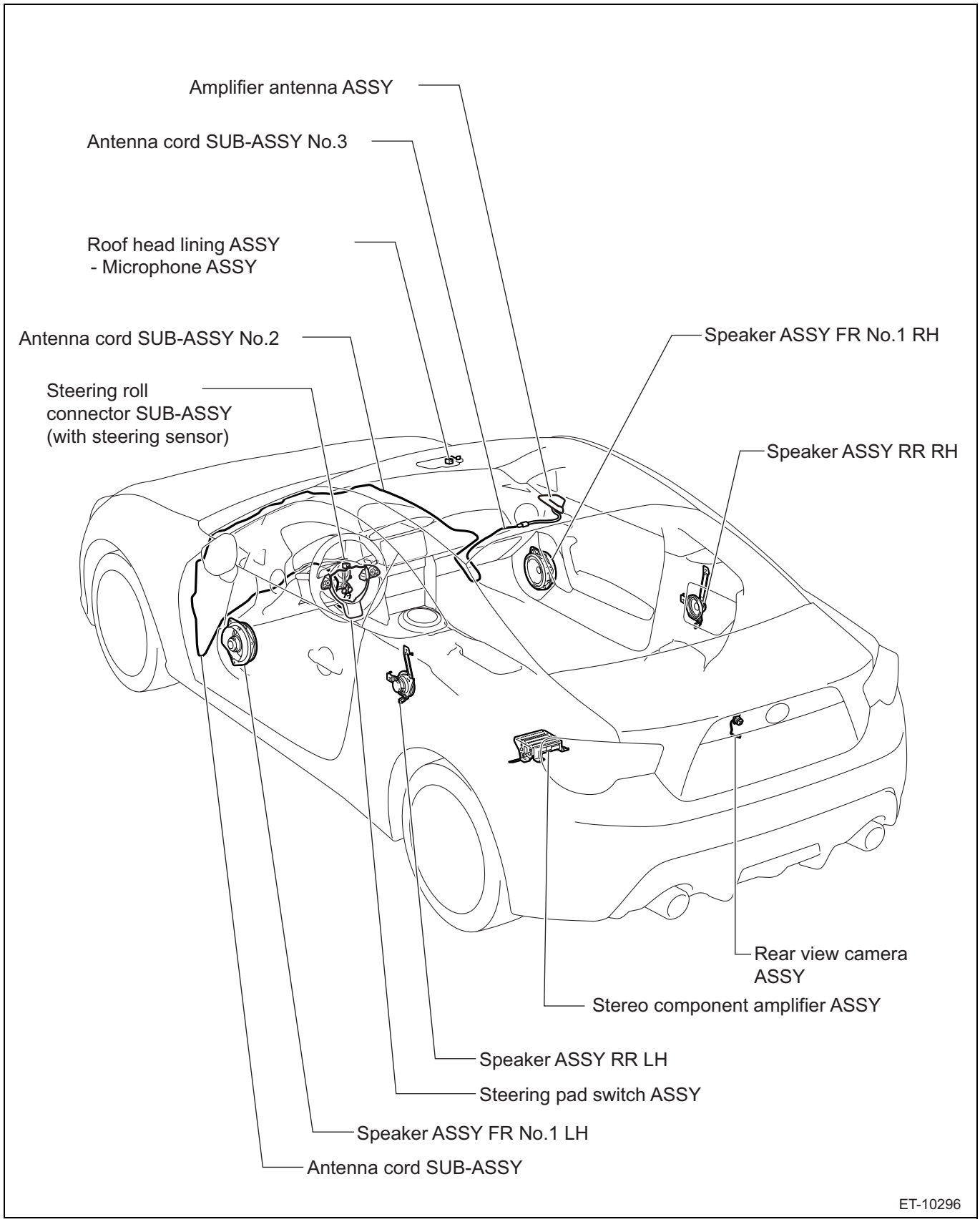

AV

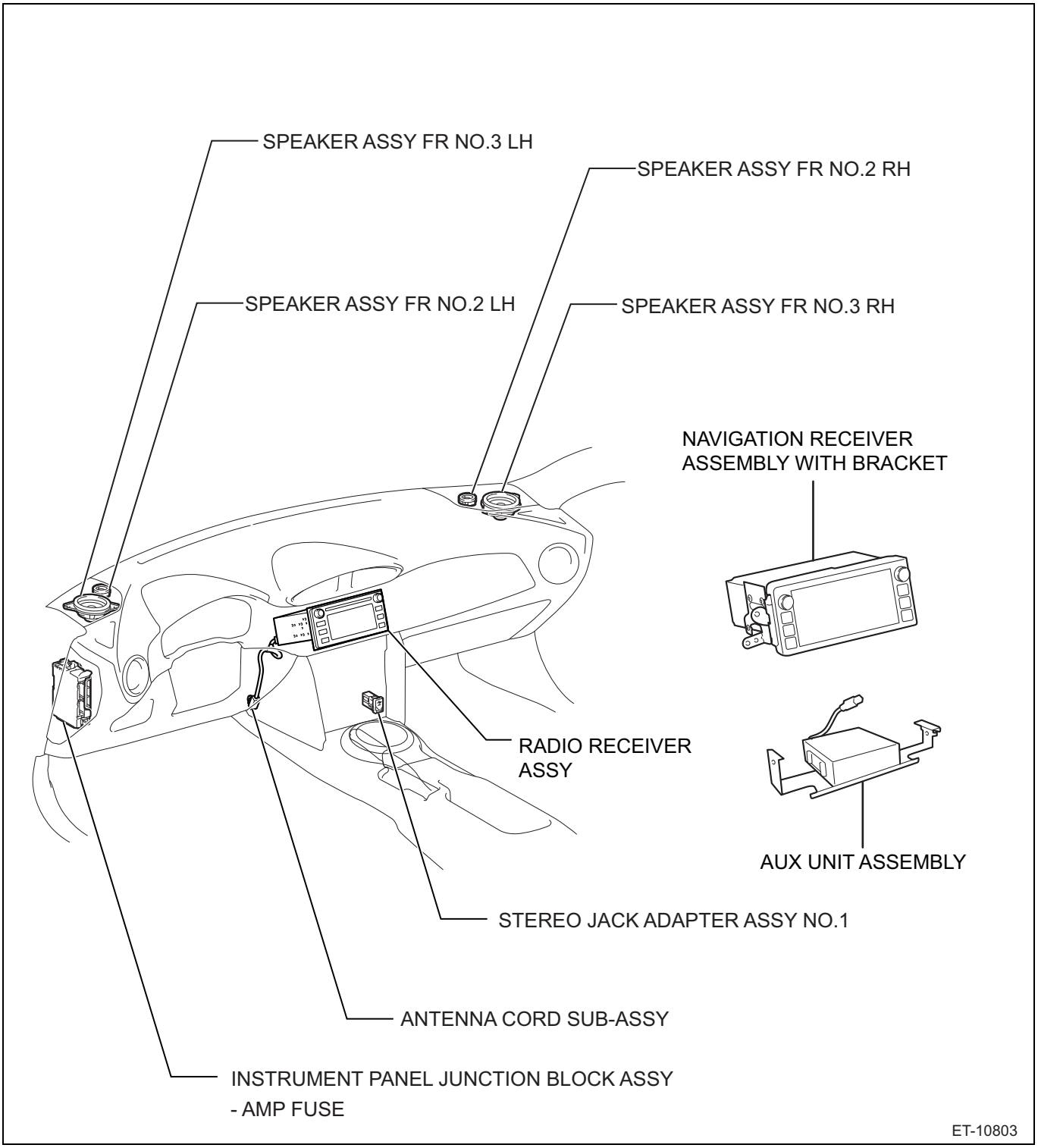
SPEAKER ASSY FR NO.3 LH
SPEAKER ASSY FR NO.2 RH
SPEAKER ASSY FR NO.2 LH
SPEAKER ASSY FR NO.3 RH
NAVIGATION RECEIVER ASSEMBLY WITH BRACKET
RADIO RECEIVER ASSY
AUX UNIT ASSEMBLY
STEREO JACK ADAPTER ASSY NO.1
ANTENNA CORD SUB-ASSY
INSTRUMENT PANEL JUNCTION BLOCK ASSY
- AMP FUSE
ET-10803

Circuit figure

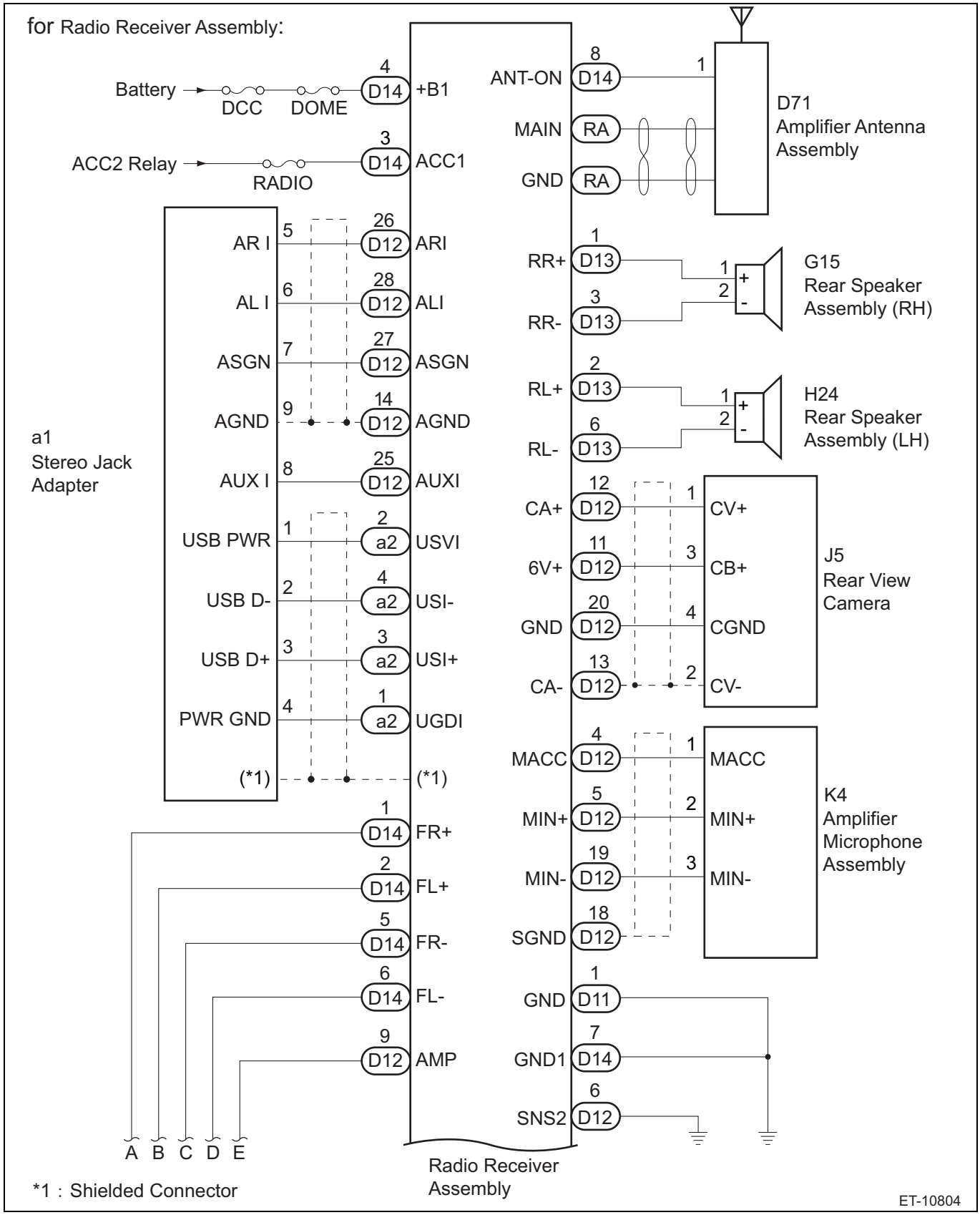

AV

AV

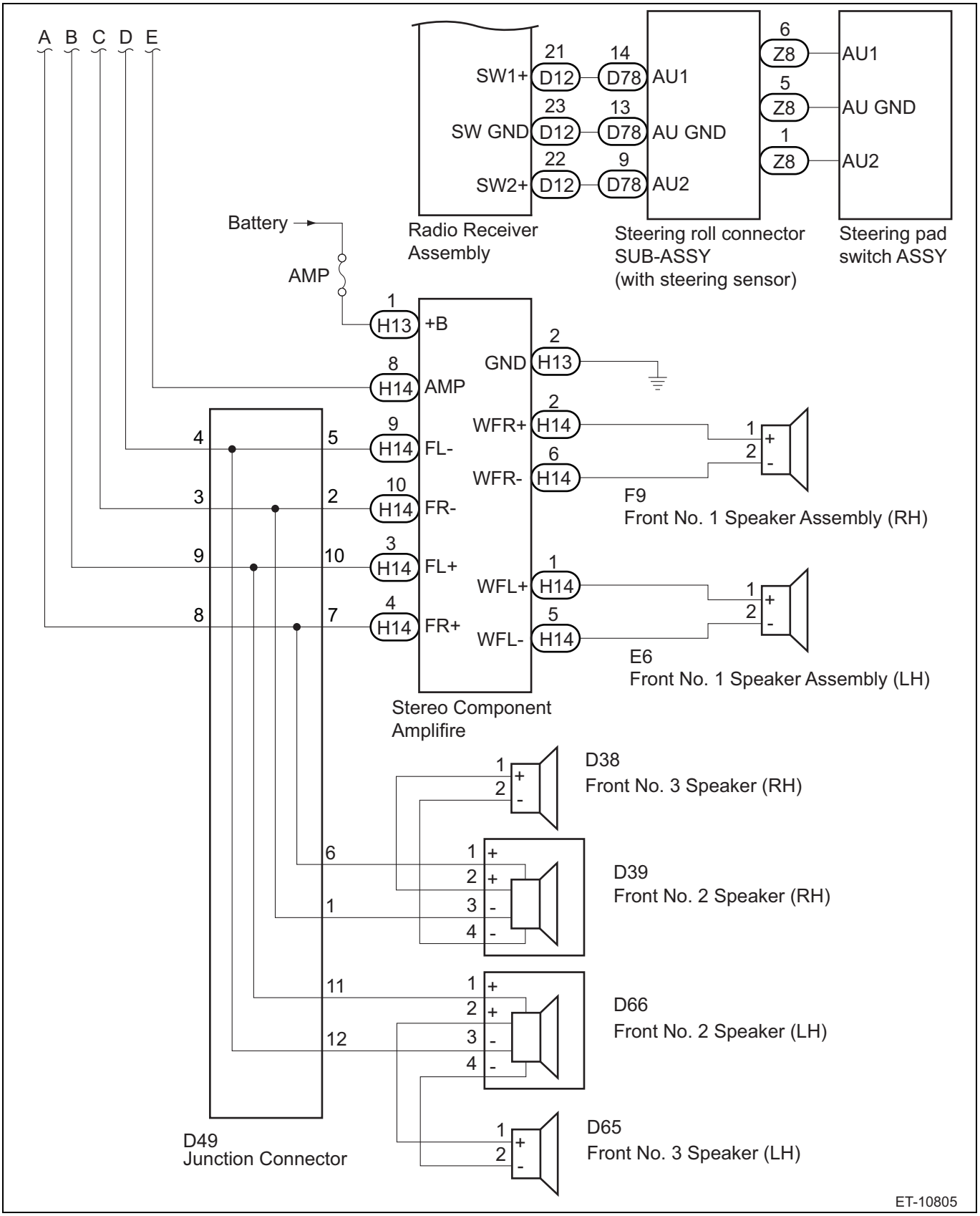
A B C D E
SW1+
SW GND
SW2+
21
14
23
13
22
9
D12
D78
AU1
AU GND
AU2
6
5
1
Z8
Z8
Z8
AU1
AU GND
AU2
Radio Receiver Assembly
Steering roll connector SUB-ASSY (with steering sensor)
Steering pad switch ASSY
Battery
AMP
1
H13
+B
2
GND
H13
8
H14
AMP
WFR+
WFR-
2
6
H14
H14
1
2
+
-
F9
Front No. 1 Speaker Assembly (RH)
4
5
9
H14
FL-
3
2
10
H14
FR-
9
10
3
H14
FL+
8
7
4
H14
FR+
WFL+
WFL-
1
5
H14
H14
1
2
+
-
E6
Front No. 1 Speaker Assembly (LH)
Stereo Component Amplifire
1
2
+
-
D38
Front No. 3 Speaker (RH)
6
1
1
2
3
4
+
+
-
-
D39
Front No. 2 Speaker (RH)
11
12
1
2
3
4
+
+
-
-
D66
Front No. 2 Speaker (LH)
1
2
+
-
D65
Front No. 3 Speaker (LH)
D49
Junction Connector
ET-10805

for Navigatoin Receiver Assembly:

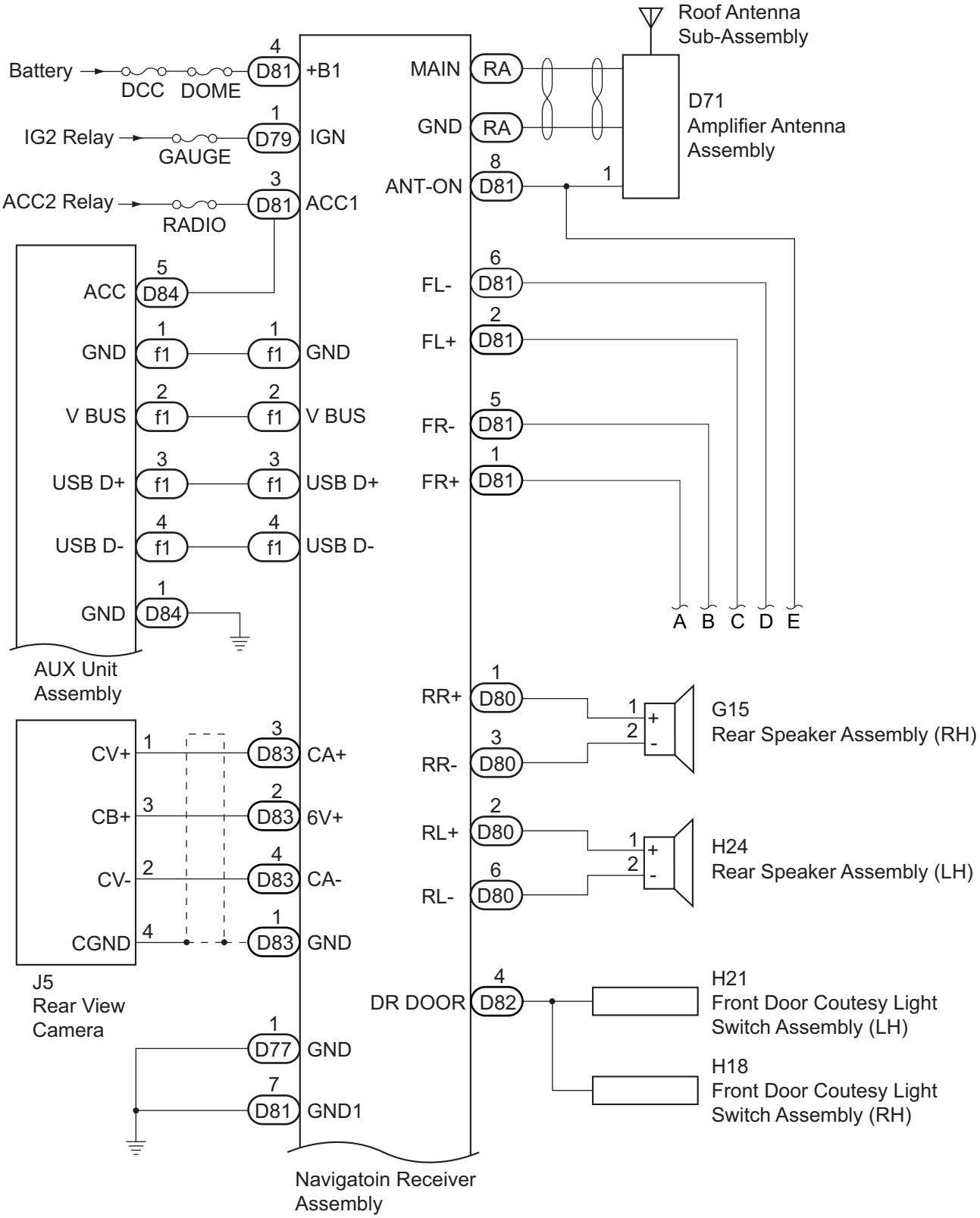

ET-10825

AV

AV

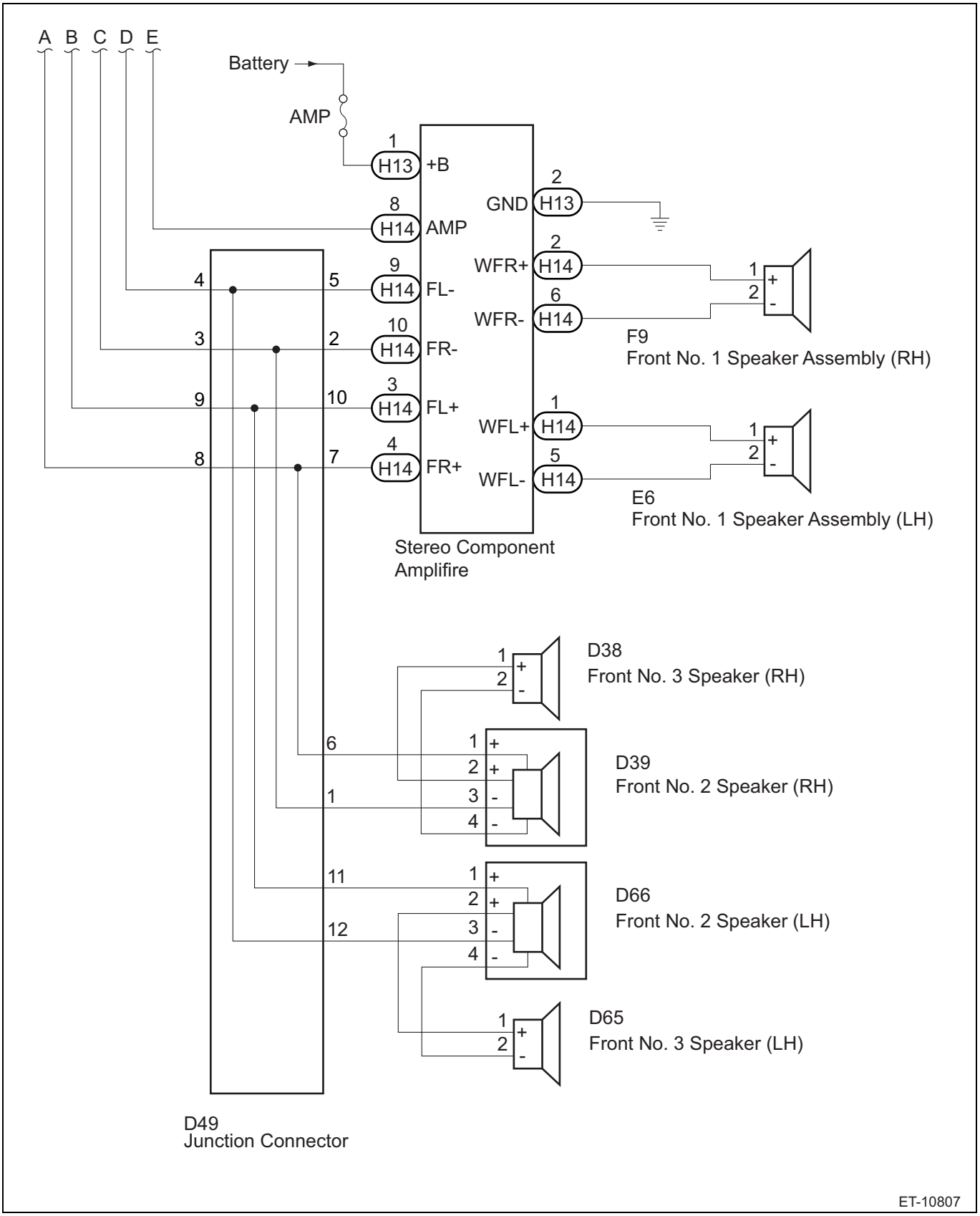
A B C D E
Battery
AMP
1
H13
+B
2
GND
H13
8
H14
AMP
2
WFR+
H14
6
WFR-
H14
F9
Front No. 1 Speaker Assembly (RH)
9
H14
FL-
10
H14
FR-
3
H14
FL+
4
H14
FR+
1
WFL+
H14
5
WFL-
H14
E6
Front No. 1 Speaker Assembly (LH)
Stereo Component
Amplifire
D38
Front No. 3 Speaker (RH)
D39
Front No. 2 Speaker (RH)
D66
Front No. 2 Speaker (LH)
D65
Front No. 3 Speaker (LH)
D49
Junction Connector
ET-10807

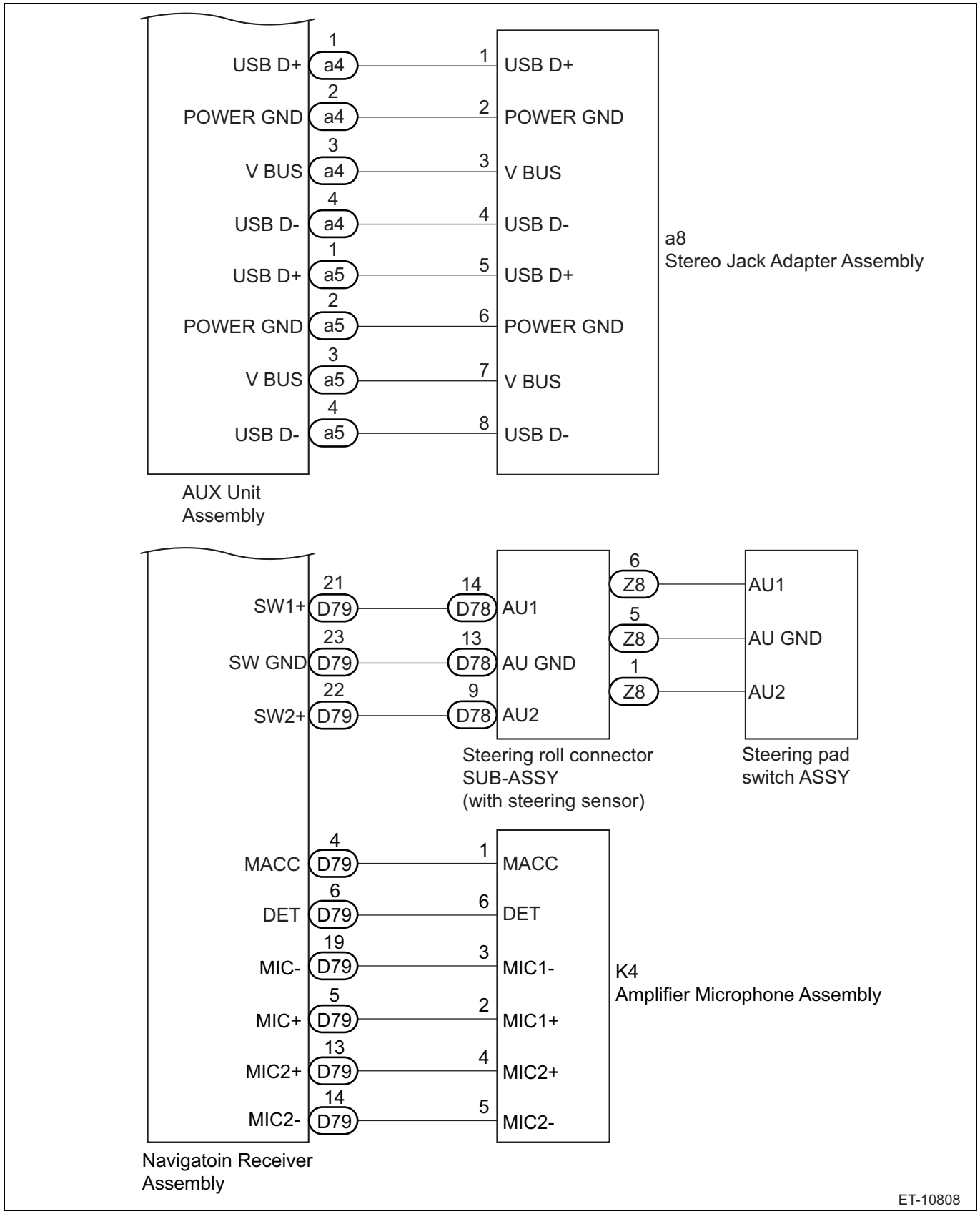

Check of radio operation

1. SUBARU STARLINK connection ID display
   (1) Turn the ignition switch to ACC.
   (2) Press the HOME button to display the {HOME} screen.
   (3) Touch the {SETTINGS} item to display the {SETTINGS} screen.

(4) Touch the {Settings General} item to display the {Settings General} screen.
(5) Touch the {Version} item of {System Software}.
(6) Check the serial number (8 digits).

2. Displaying of software version
(1) Perform the same procedures as for the SUBARU STARLINK connection ID.
(2) Check the Software Ver.

Inspection of radio function

1. Connections inspection
(1) Display the diagnostic mode.
(a)Turn the ignition switch to ACC.
(b)Press the VOLUME button to display the audio off screen.

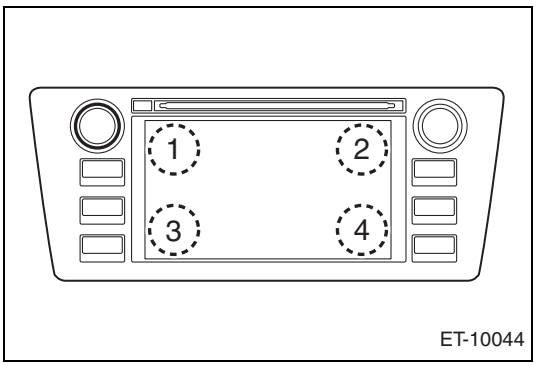

(c)With the audio off, touch the screen in order 1 to 4.
(d)Display the {Line Diag} screen.
NOTE:
You can cancel diagnostic mode by pressing the VOLUME button or turning the ignition switch from OFF to ACC.
(2) Check the connection status by using the {Connectivity Check} item of the {Line Diag} screen.
OK: All connected devices are properly connected.
NG: A device is not connected or there is a fault in the connection status.
NOTE:
Check the external connection terminals (USB and AUX) by connecting a memory or pin jack for checking, and check the connections.
(3) Inspect the connection status of connectors, and if there are no problems found, it is probable that a connected device or the main unit is defective.

2. Inspection of vehicle signals
(1) Display the diagnostic mode in the same manner as when inspecting connections.
(2) Check the connection status by using the {Vehicle Signal Check} item of the {Line Diag} screen.
(a)Illumination inspection
NOTE:
Turn the ignition switch to ON before starting the inspection.
1. Turn the headlight dimmer switch to the parking position.
Check that the light control rheostat does not turn ON at this time.
2. Check that {OK} of the ILL+ item is lit up and the screen goes dark.
OK: Normal
NG: Fault Inspect the signal wire connectors, and if there are no problems found, it is probable that the main unit is defective.
(b)Inspection of the speed sensor
NOTE:
- Check that the area around the vehicle is safe before starting the inspection.
- It is helpful to lift up the vehicle.
- Clear the memory if any diagnostic codes are input into the VDC CM.

1. Drive the vehicle at a speed of 8 km/h (5 mph) or more.
2. Check that {OK} is displayed for the SPD item.
OK: Normal

NG: Speed was less than 8 km/h (5 mph) or the signal line is faulty. Inspect the signal wire connectors, and if there are no problems found, it is probable that the main unit is defective.

(c) Inspection of parking brake signal

1. Pull the parking brake lever.
2. Check that {OK} is displayed for the PKB item.
   OK: Normal
   NG: Fault Inspect the signal wire connectors, and if there are no problems found, it is probable that the main unit is defective.

(d) Inspection of the back sensor

NOTE:

Check that the area behind the vehicle is safe before starting the inspection. Turn the ignition switch to ON.

1. With the parking break lever pulled and the brake pedal depressed, move the select or gearshift lever to reverse.
2. Check that {OK} is displayed for the REV item.
   OK: Normal
   NG: Fault Inspect the signal wire connectors, and if there are no problems found, it is probable that the main unit is defective.

Inspection of navigation function

1. Connections inspection
   (1) Display the Line Diag mode.
   (a) Turn the ignition switch to ACC.
   (b) While pressing the home button, press the TUNE/SCROLL button twice.
   (c) Display the {Line Diag} screen.
   NOTE:
   You can cancel the Line Diag mode by pressing the home button for 3 seconds or more, or turning the ignition switch OFF →ACC.
   (2) Check the connection status by using the {Connection} item of the {Line Diag} screen.

Item	Contents	Inspection
GPS	GPS antenna connection	Check that the display indicates OK. (Model with GPS antenna only)
MIC	MIC connection	Check that the map light illuminates, and the display indicates OK.
Rr CAM	Rr CAM Video connection	Check that the display indicates OK.
USB1.2	USB connection	Connect the memory for check to the USB terminal (either terminal is OK), and check that "USB1" indicates OK.
SXM	SXM connection	Check that the display indicates OK.

2. Inspection of vehicle signals
   (1) Display Line Diag in the same manner as when inspecting connections.
   (2) Check the connection status by using the {Vehicle Signal Check} item of the {Line Diag} screen.

Item	Contents	Inspection
Batt Volt	Battery voltage	Check that the battery voltage is displayed.
IG	IGN signal	Check that the display indicates ON.
PKB	Parking brake signal	Pull the parking brake lever, and check that the display indicates ON.
REV	Reverse signal	Move the select lever or gearshift lever to reverse, and check that the display indicates ON.
Bright	Bright signal	Turn the bright switch to ON, and check that the display shows ON.
Speed	Speed pulse signal	Enter the vehicle speed, and check that the display indicates ON.
ILL+	Illumination signal	Turn the lighting switch to ON, and check that the display indicates ON.

3. Check of speaker output and antenna connection
   (1) Display the Line Diag mode in the same manner as when inspecting connections.
   (2) Check the speaker output and the antenna connection by using the {Audio Check} item of the {Line Diag} screen.

Item	Contents	Inspection
MODE	Switching of radio band	Check that the radio band (AM/FM) can be switched.
Seek Up/Down	Seek Up/Down operation	Check that the SEEK Up/Down is adjustable.
Speaker Check	Speaker check operation	Sounds for 0.5 seconds each in the order of front right →tweeter right →tweeter left →front left →rear left →rear right.

NOTE:
The volume during the speaker check sounds at the maximum.

4. Microphone check
   (1) Display the Line Diag mode in the same manner as when inspecting connections.
   (2) Check that the microphone input level changes according to sounds and voices by using the {Microphone} item of the {Line Diag} screen.

Radio receiver ASSY

Parts location

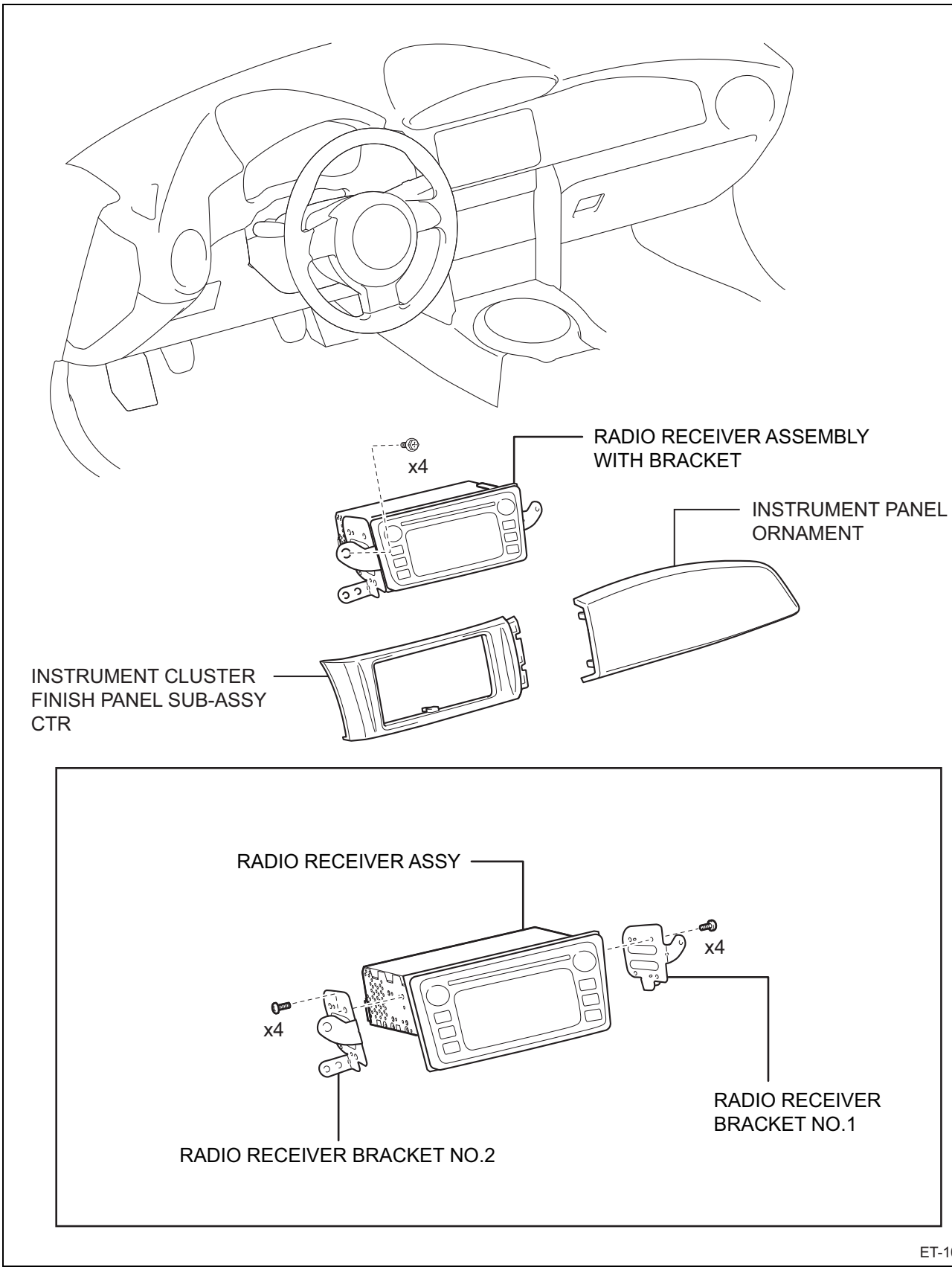

Removal

1. Disconnection of the battery ground terminal (Refer to IN - 6)

2. Removal of the instrument panel ornament (Refer to IT - 22)
3. Removal of the instrument cluster finish panel SUB-ASSY CTR (Refer to IT - 23)

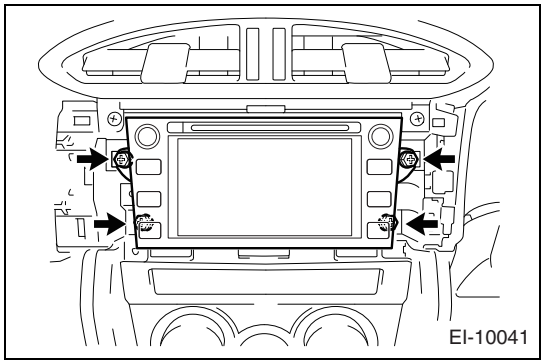
EI-10041

4. Removal of the radio receiver ASSY
   (1) Undo the 4 bolts and pull out the radio receiver ASSY toward the rear of the vehicle.
   (2) Disconnect each connector and remove the radio receiver ASSY.

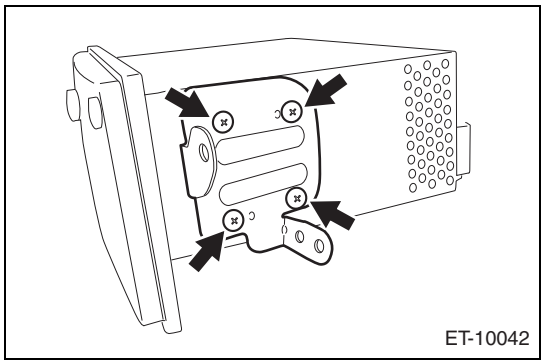
ET-10042

5. Removal of the radio receiver bracket No.1
   (1) Undo the 4 screws and remove the radio receiver bracket No.1 from the radio ASSY.
6. Removal of the radio receiver bracket No.2
   NOTE:
   Perform the same procedure as with the radio receiver bracket No.1.

Installation

1. Installation of the radio receiver bracket No.1
   (1) Install the radio receiver bracket No.1 onto the radio receiver ASSY and fasten the 4 screws.
2. Installation of the radio receiver bracket No.2
   NOTE:
   Perform the same procedure as with the radio receiver bracket No.1.
3. Installation of the radio receiver ASSY
   (1) Connect each connector.
   (2) Install the radio receiver ASSY in place with the 4 bolts.
4. Installation of the instrument cluster finish panel SUB-ASSY CTR (Refer to IT - 29)
5. Installation of the instrument panel ornament (Refer to IT - 29)
6. Connection of the battery ground terminal
   Standard value:T=6.0N·m {61kgf·cm} {4.4ft·lbf}
7. Settings when removing/installing battery terminals (Refer to IN - 10)

Navigation receiver ASSY

Parts location

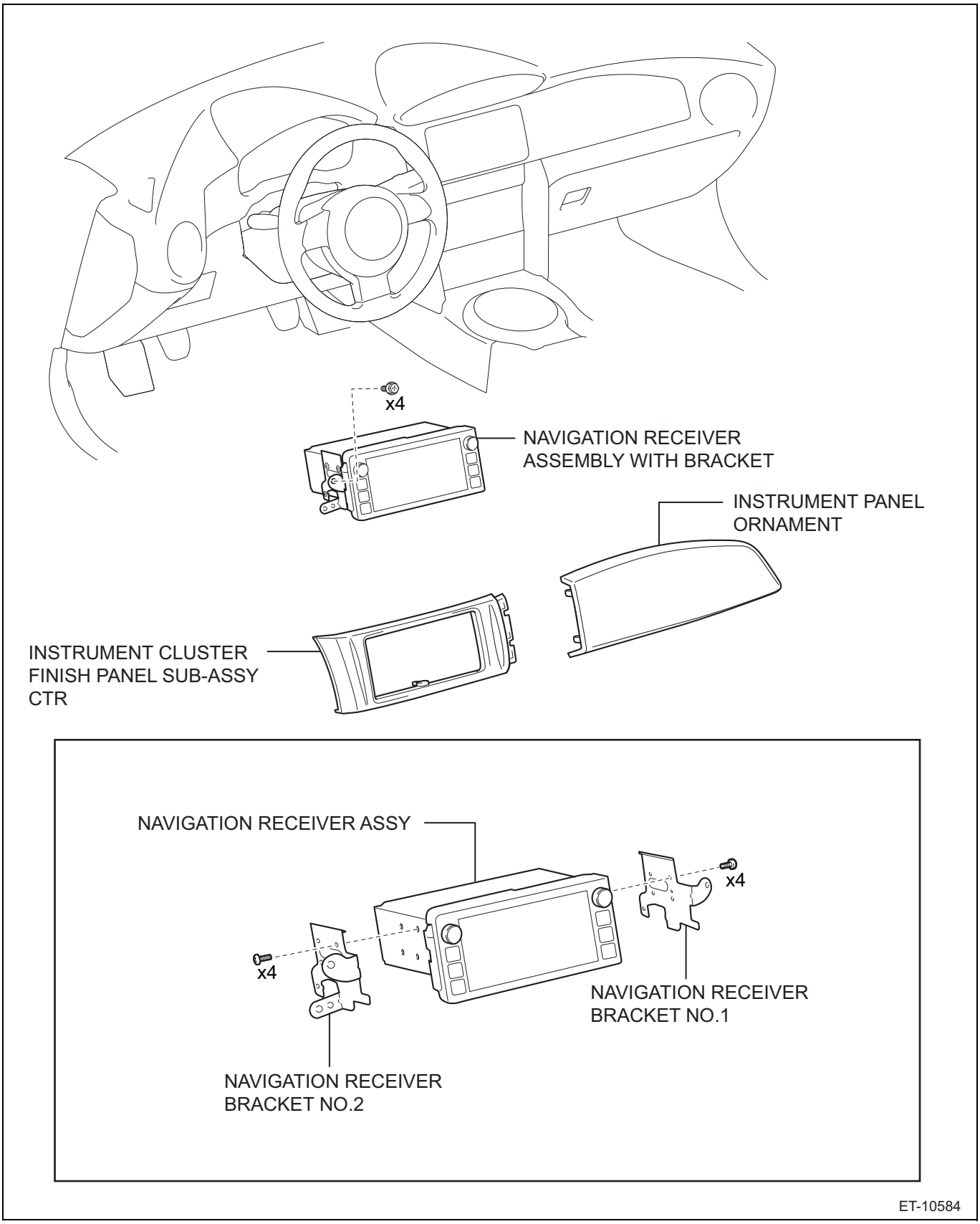

Removal

1. Disconnection of the battery ground terminal (Refer to IN - 6)

2. Removal of instrument panel ornament (Refer to IT - 22)
3. Removal of instrument cluster finish panel SUB-ASSY CTR (Refer to IT - 23)

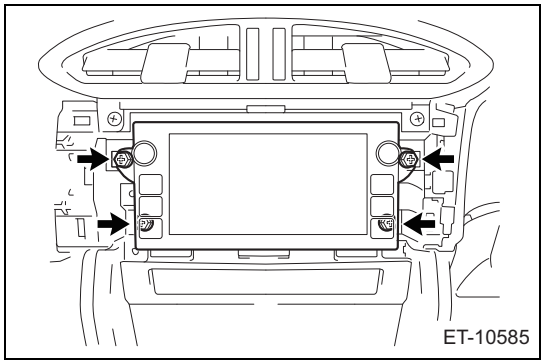

4. Removal of navigation receiver ASSY
   (1) Remove the 4 bolts and pull out the navigation receiver ASSY toward the rear of the vehicle.
   (2) Disconnect each connector and remove the navigation receiver ASSY.

5. Removal of AUX unit ASSY (Refer to AV - 35)

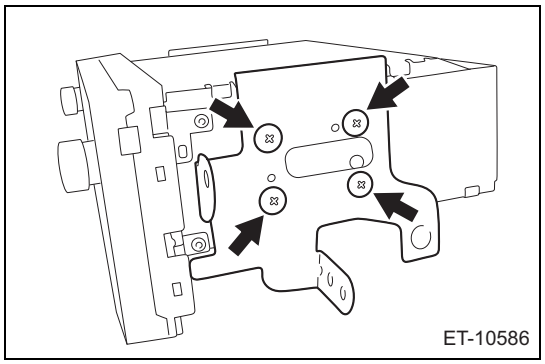

6. Removal of navigation receiver bracket NO.1 ASSY
   (1) Remove the 4 screws, and remove the navigation receiver bracket NO.1 from the navigation receiver ASSY.
7. Removal of navigation receiver bracket NO.2
   NOTE:
   Perform the same procedure as with navigation receiver bracket NO.1.

Installation

1. Installation of navigation receiver bracket NO.1
   (1) Using the 4 screws, install the navigation receiver bracket NO.1 onto the navigation receiver ASSY.
2. Installation of navigation receiver bracket NO.2
   NOTE:
   Perform the same procedure as with navigation receiver bracket NO.1.
3. Installation of AUX unit ASSY (Refer to AV - 35)
4. Installation of navigation receiver ASSY
   (1) Connect each connector.
   (2) Using the 4 bolts, install the navigation receiver ASSY.
5. Installation of the instrument cluster finish panel SUB-ASSY CTR (Refer to IT - 29)
6. Installation of the instrument panel ornament (Refer to IT - 29)
7. Connection of the battery ground terminal
   Standard value:T=6.0N·m {61kgf·cm} {4.4 ft·lbf}
8. Settings when removing/installing battery terminals (Refer to IN - 10)

Front door speaker

Exploded view

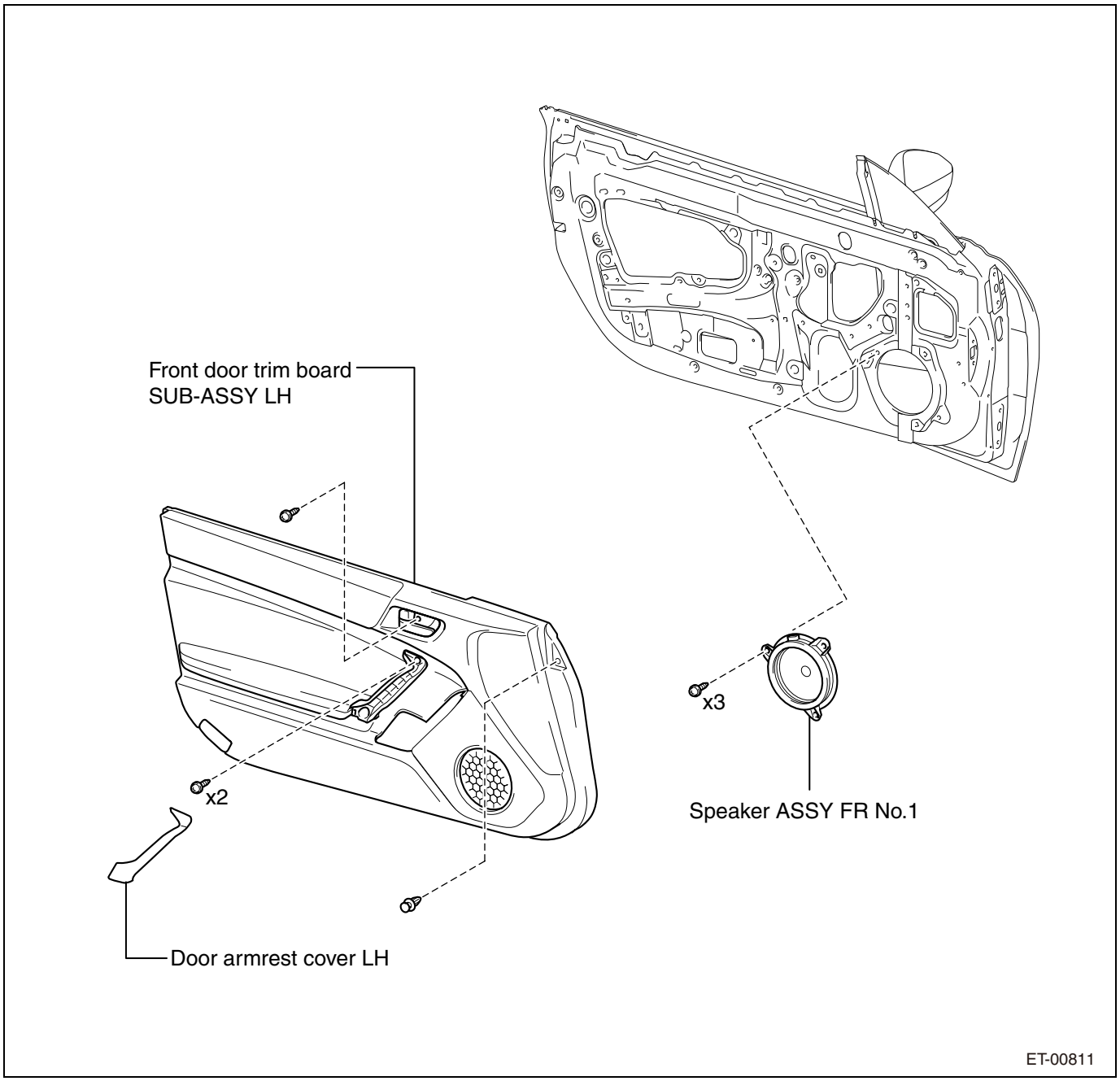

Removal

NOTE:

The following procedure is for LH side. This same LH side procedure can also be used for the RH side.

1. Removal of the door armrest cover LH (Refer to DH - 32)
2. Removal of the front door trim board SUB-ASSY LH (Refer to DH - 32)

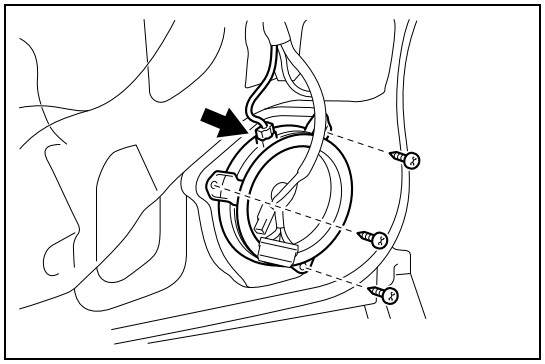

3. Removal of the speaker ASSY FR No.1
   CAUTION:
   Do not touch the body, the edge, and the center cap of the speaker ASSY FR No.1 diaphragm.
   (1) Disconnect the connector.
   (2) Undo the three screws and remove the speaker ASSY FR No.1.

AV

Installation

NOTE:

The following procedure is for LH side. This same LH side procedure can also be used for the RH side.

1. Installation of the speaker ASSY FR No.1
   CAUTION:
   Do not touch the body, the edge, and the center cap of the speaker ASSY FR No.1 diaphragm.
   (1) Install the speaker ASSY FR No.1 and fasten the three screws.
   (2) Connect the connector.
2. Installation of the front door trim board SUB-ASSY LH (Refer to DH - 52)
3. Installation of the door armrest cover LH (Refer to DH - 54)

Unit inspection

1. Inspection of the speaker ASSY FR No.1
   CAUTION:
   Do not touch the body, the edge, and the center cap of the speaker ASSY FR No.1 diaphragm.
   (1) When installing the speaker, always confirm that there are no abnormalities such as looseness or excessive play.
   (2) Check that no foreign objects have entered into the speaker, and that there are no abnormalities such as deformation or tearing of the speaker diaphragm or center cap.

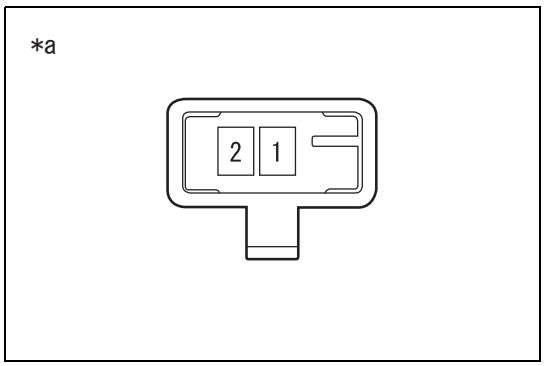

2. Resistance check
   (1) Disconnect the speaker ASSY FR No.1 connector.
   (2) Measure the resistance between connector terminals.

Resistance

Inspection terminals	Inspection conditions	Standard value
1 (+) - 2(-)	Always	2.5 to 3.1 Ω

NOTE:
This inspection is carried out without removing the speaker ASSY FR No.1.

Captions in illustration

*a	Connector not connected (Speaker ASSY FR No.1)

Quarter trim speaker

Exploded view

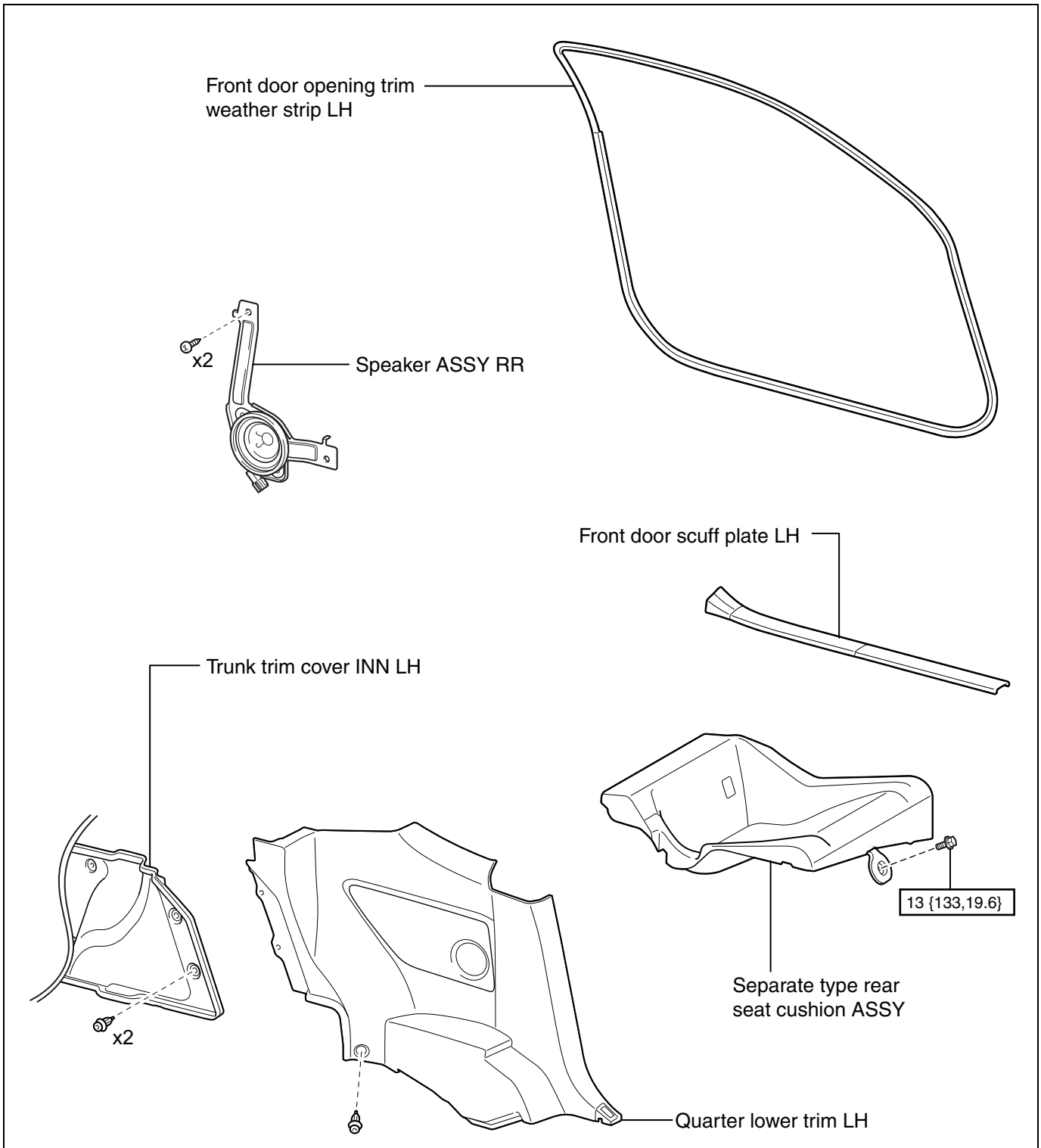

Removal

NOTE:

The following procedure is for LH side. This same LH side procedure can also be used for the RH side.

1. Disconnection of the front door opening trim weather strip LH (Refer to IT - 48)
2. Removal of front door scuff plate LH (Refer to IT - 48)
3. Removal of the separate-type rear seat cushion ASSY (Refer to SE - 31)
4. Disconnection of trunk trim cover INN LH (Refer to IT - 49)
5. Removal of quarter lower trim LH (Refer to IT - 49)

AV

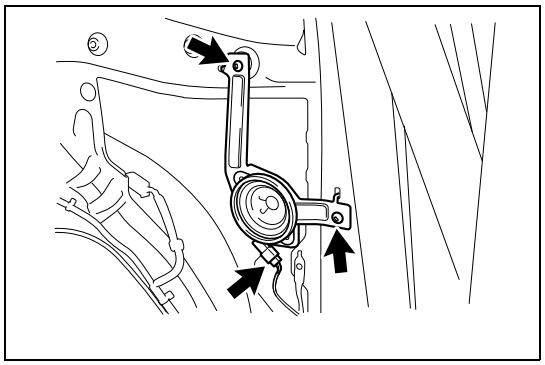

6. Removal of the speaker ASSY RR
   CAUTION:
   Do not touch the body, the edge, and the center cap of the speaker ASSY RR diaphragm.
   (1) Disconnect the connector.
   (2) Undo the two screws and remove the speaker ASSY RR.

Installation

NOTE:

The following procedure is for LH side. This same LH side procedure can also be used for the RH side.

1. Installation of the speaker ASSY RR
   CAUTION:
   Do not touch the body, the edge, and the center cap of the speaker ASSY RR diaphragm.
   (1) Install the speaker ASSY RR and fasten the two screws.
   (2) Connect the connector.
2. Installation of the quarter lower trim LH (Refer to IT - 58)
3. Installation of the trunk trim cover INN LH (Refer to IT - 58)
4. Installation of the separate-type rear seat cushion ASSY (Refer to SE - 39)
5. Installation of front door scuff plate LH (Refer to IT - 58)
6. Installation of the front door opening trim weather strip LH (Refer to IT - 58)

Unit inspection

1. Inspection of the speaker ASSY RR
   CAUTION:
   Do not touch the body, the edge, and the center cap of the speaker ASSY RR diaphragm.
   (1) When installing the speaker, always confirm that there are no abnormalities such as looseness or excessive play.
   (2) Check that no foreign objects have entered into the speaker, and that there are no abnormalities such as deformation or tearing of the speaker diaphragm or center cap.

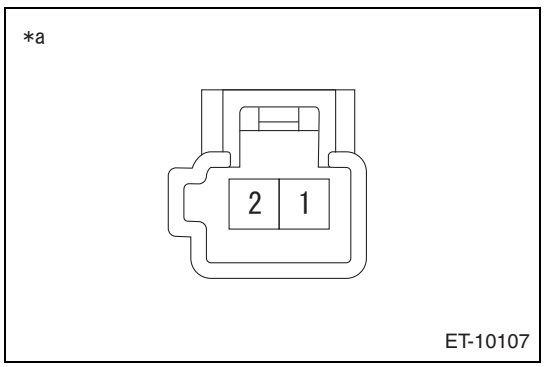

2. Resistance check
   (1) Disconnect the speaker ASSY RR connector.
   (2) Measure the resistance between connector terminals.

Resistance

Inspection terminals	Inspection conditions	Standard value
1(+) - 2(-)	Always	3.4 to 4.2 Ω

NOTE:

This inspection is carried out without removing the speaker ASSY RR.

Captions in illustration

*a	Connector not connected (Speaker ASSY RR)

Instrument panel speaker

Exploded view

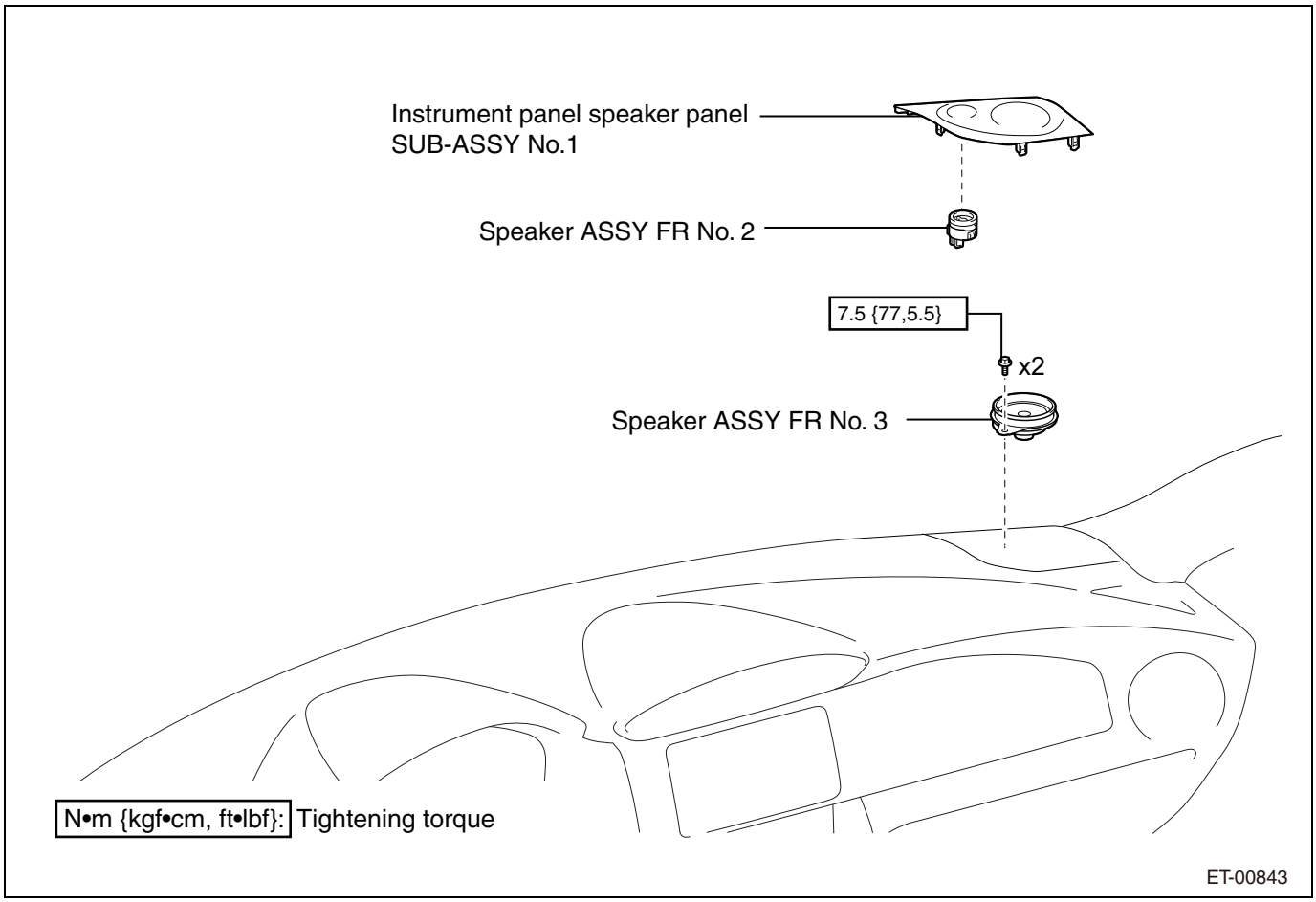

Removal

NOTE:

The procedures described below are for the RH side. Perform the same procedures for the LH side.

1. Removal of instrument panel speaker panel SUB-ASSY NO.1 (Refer to IT - 6)

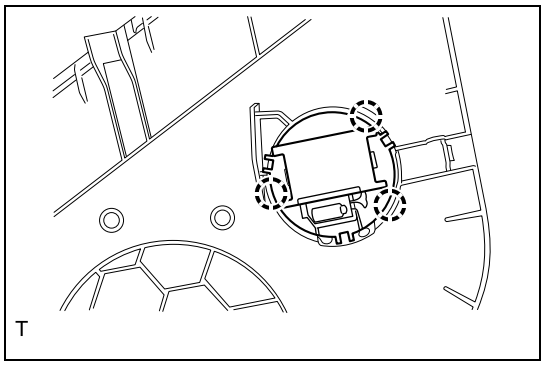

2. Removal of the speaker ASSY FR No.2

   CAUTION:

   Do not touch the diaphragm of speaker ASSY FR No.2.

   (1) Unhook the three tabs and remove the speaker ASSY FR No.2 from the instrument panel speaker panel SUB-ASSY No.1.

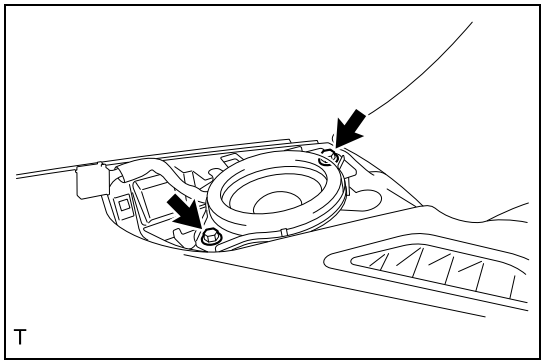

3. Remove the speaker ASSY FR No.3.
   CAUTION:
   Do not touch the diaphragm body, edge or center cap parts of speaker ASSY FR No.3.
   (1) Undo the two bolts and remove the speaker ASSY FR No.3.
   (2) Disconnect the connector.

AV

Installation

NOTE:

The procedures described below are for the RH side. Perform the same procedures for the LH side.

1. Install the speaker ASSY FR No.3.
   CAUTION:
   Do not touch the diaphragm body, edge or center cap parts of speaker ASSY FR No.3.
   (1) Connect the connector.
   (2) Install the speaker ASSY FR No.3 and fasten the two bolts.
   Standard value:T=7.5N·m {77kgf·cm} {5.5ft·lbf}
2. Installation of the speaker ASSY FR No.2
   CAUTION:
   Do not touch the diaphragm of speaker ASSY FR No.2.
   (1) Engage the three tabs and install the speaker ASSY FR No.2 onto the instrument panel speaker panel SUB-ASSY No.1.
3. Installation of instrument panel speaker panel SUB-ASSY NO.1 (Refer to IT - 17)

Unit inspection

1. Inspection of the speaker ASSY FR No.2
   CAUTION:
   Do not touch the diaphragm of speaker ASSY FR No.2.
   (1) When installing the speaker, always confirm that there are no abnormalities such as looseness or excessive play.
   (2) Check that no foreign objects have entered into the speaker, and that there are no abnormalities such as deformation or tearing of the speaker diaphragm.
2. Inspect the speaker ASSY FR No.3.
   CAUTION:
   Do not touch the diaphragm body, edge or center cap parts of speaker ASSY FR No.3.
   (1) When installing the speaker, always confirm that there are no abnormalities such as looseness or excessive play.
   (2) Check that no foreign objects have entered into the speaker, and that there are no abnormalities such as deformation or tearing of the speaker diaphragm or center cap.

Amplifier

Parts location

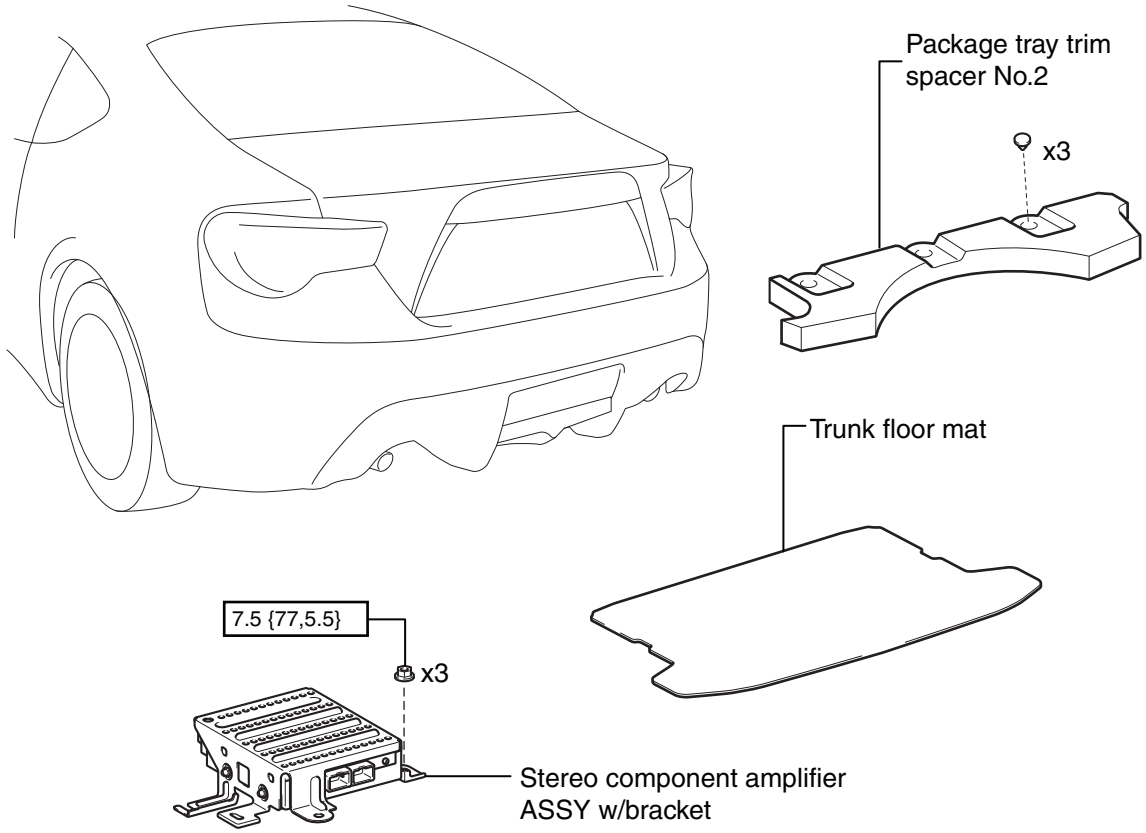

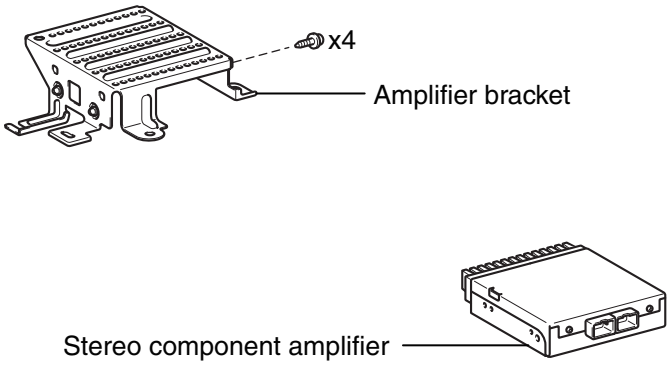

N*m {kgf*cm,ft*lbf} : Tightening torque

ET-10075

Removal

1. Remove the trunk floor mat.
   (1) Remove the trunk floor mat.
2. Removal of package tray trim spacer No.2 (Refer to DH - 79)
3. Remove the amplifier ASSY (with attached bracket).

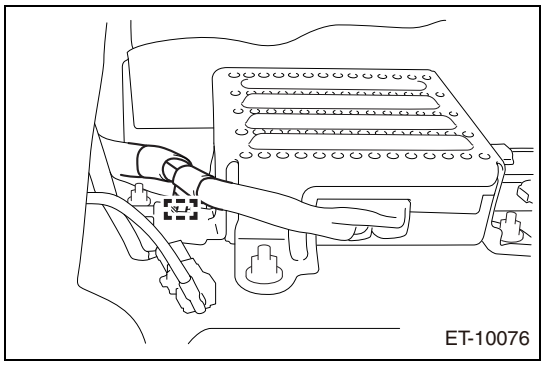

(1) Disconnect the clamps and wiring harness from the stereo component amplifier bracket.

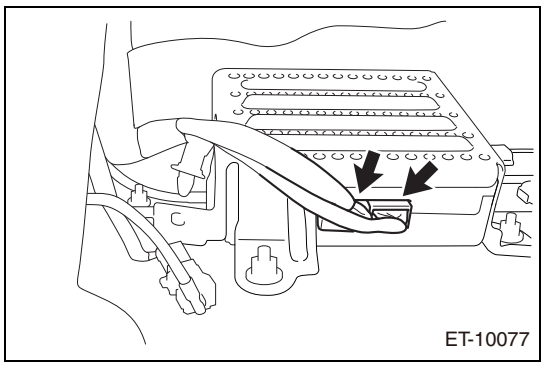

(2) Disconnect the two connectors from the stereo component amplifier.

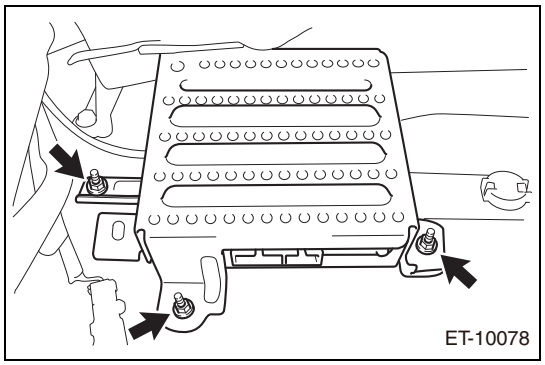

(3) Undo the three nuts and take off the stereo component amplifier ASSY (with attached bracket).

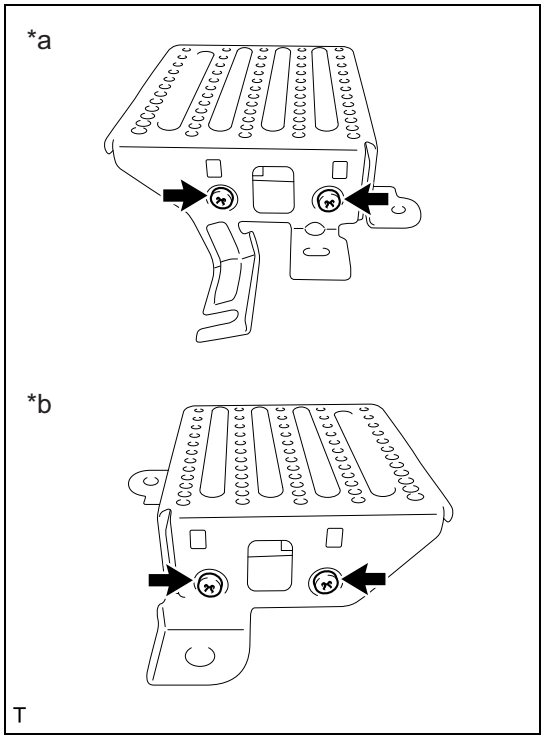

4. Remove the amplifier bracket.
   (1) Undo the four screws and remove the amplifier bracket.

Captions in illustration

*a	LH side
*b	RH side

Installation

1. Install the amplifier bracket.
   (1) Install the amplifier bracket in place with the four screws.
2. Install the amplifier ASSY (with attached bracket).
   (1) Install the amplifier ASSY (with attached bracket) and fasten the three nuts.
   Standard value:T=7.5N·m {77kgf·cm} {5.5ft·lbf}
   (2) Connect the two connectors to the stereo component amplifier ASSY (with attached bracket).
   (3) Fasten the clamp to connect the wiring harness to the amplifier cover.
   (4) Engage the clips and install the rear seat back cover.
3. Install the trunk floor mat.
   (1) Install the trunk floor mat.

Amplifier antenna

Exploded view

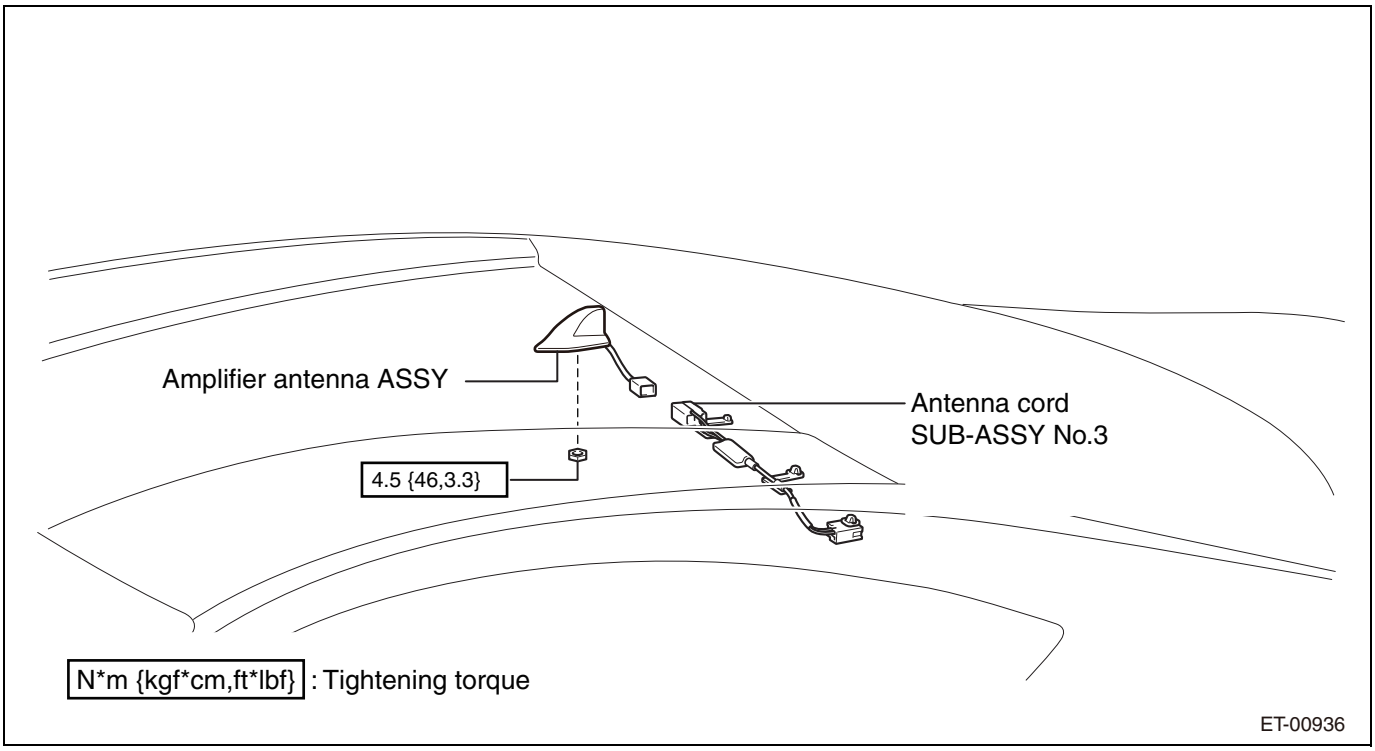

Removal

1. Disconnection of the battery ground terminal (Refer to IN - 6)
2. Removal of the roof head lining ASSY (Refer to IT - 47)

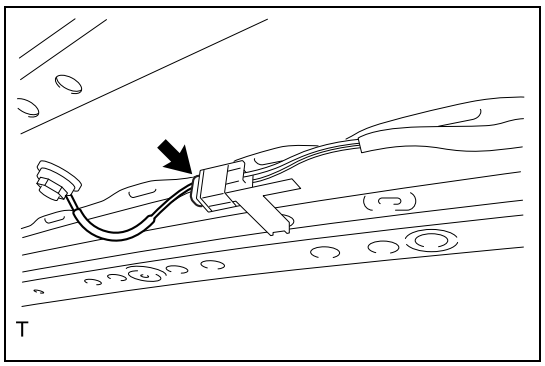

3. Removal of the amplifier antenna ASSY
   (1) Disconnect the connector.

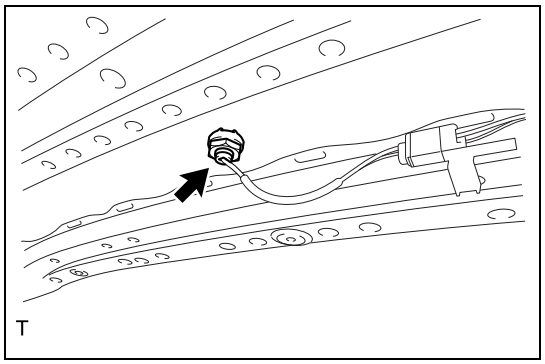

   (2) Remove the antenna nut.

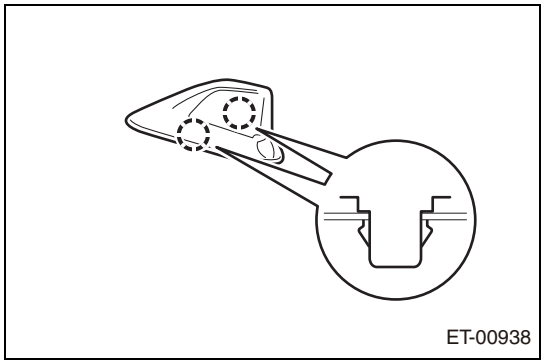

(3) Unhook the two tabs and remove the amplifier antenna ASSY.

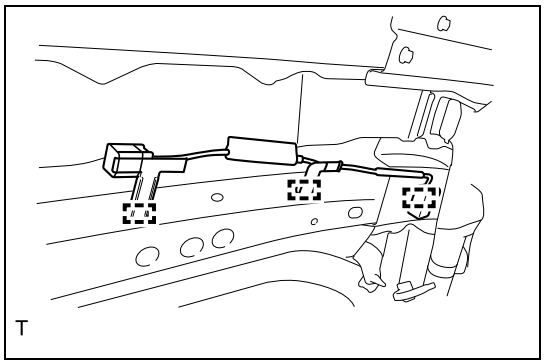

4. Removal of the antenna cord SUB-ASSY No.3
   (1) Release the three clamps and remove the antenna cord SUB-ASSY No.3.

Installation

1. Installation of the antenna cord SUB-ASSY No.3
   (1) Fasten the three clamps and install the antenna cord SUB-ASSY No.3.
2. Installation of the amplifier antenna ASSY
   (1) Attach the two sets of tabs of the amplifier antenna ASSY to the roof.

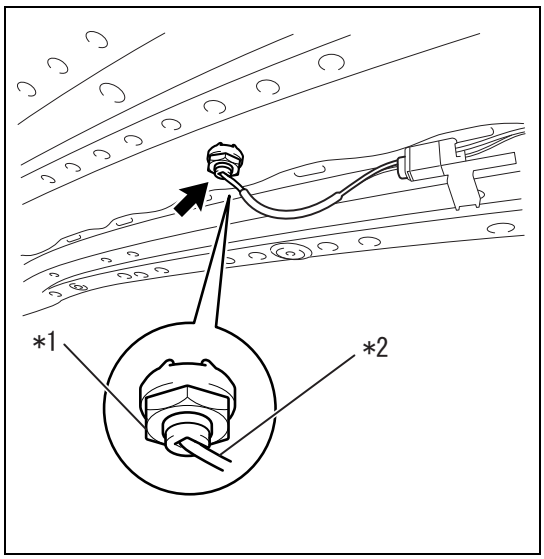

(2) Move the antenna cord so that it sticks out toward the rear of the vehicle, and attach the antenna nut.

Captions in illustration

*1	Antenna nut
*2	Antenna cord

Standard value:T=4.5N·m {46kgf·cm} {3.3ft·lbf}

   (3) Connect the connector.
3. Installation of the roof head lining ASSY (Refer to IT - 56)
4. Connection of the battery ground terminal
   Standard value:T=6.0N·m {61kgf·cm} {4.4 ft·lbf}
5. Settings when removing/installing battery terminals (Refer to IN - 10)

Navigation antenna

Parts location

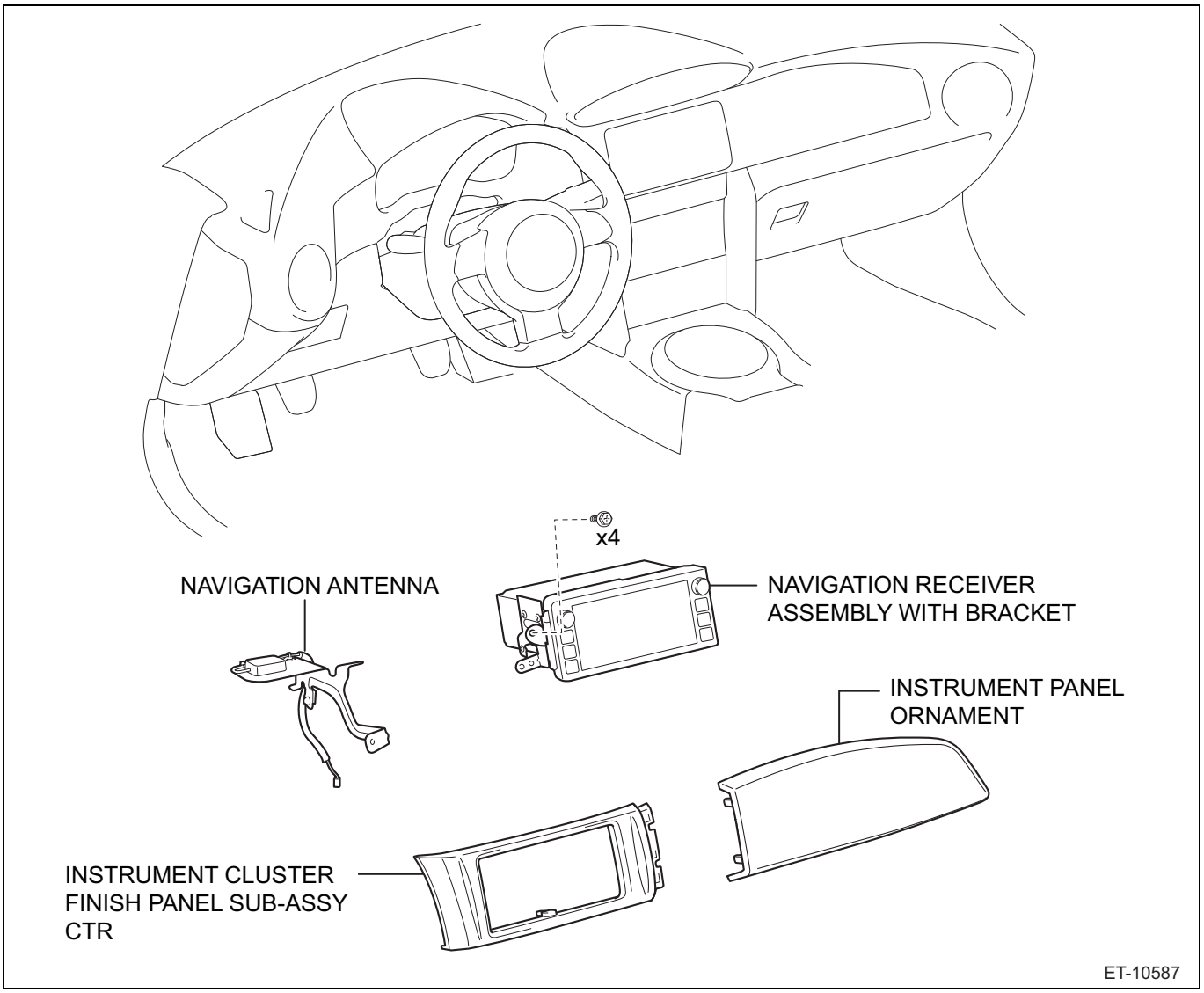

Removal

1. Disconnection of battery ground terminal (Refer to IN - 6)
2. Removal of instrument cluster finish panel SUB-ASSY CTR (Refer to IT - 23)
3. Removal of instrument panel ornament (Refer to IT - 22)
4. Removal of navigation receiver ASSY (Refer to AV - 16)

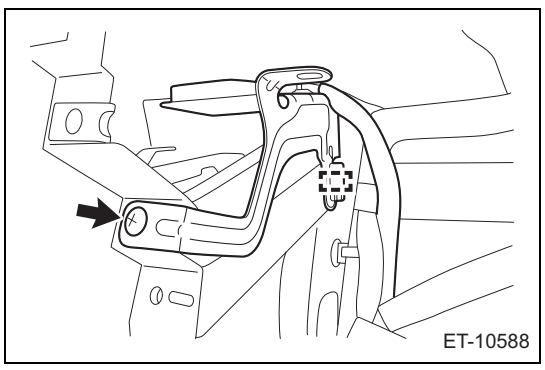

5. Removal of navigation antenna
   (1) Remove the screw, release the clamp, and remove the navigation antenna.

Installation

1. Installation of navigation antenna
   (1) Install the screw, engage the clamp, and install the navigation antenna.
2. Installation of navigation receiver ASSY (Refer to AV - 16)
3. Installation of instrument cluster finish panel SUB-ASSY CTR (Refer to IT - 29)
4. Installation of the instrument panel ornament (Refer to IT - 29)
5. Connection of the battery ground terminal
   Standard value:T=6.0N·m {61kgf·cm} {4.4 ft·lbf}
6. Settings when removing/installing battery terminals (Refer to IN - 10)

Antenna cord

Exploded view

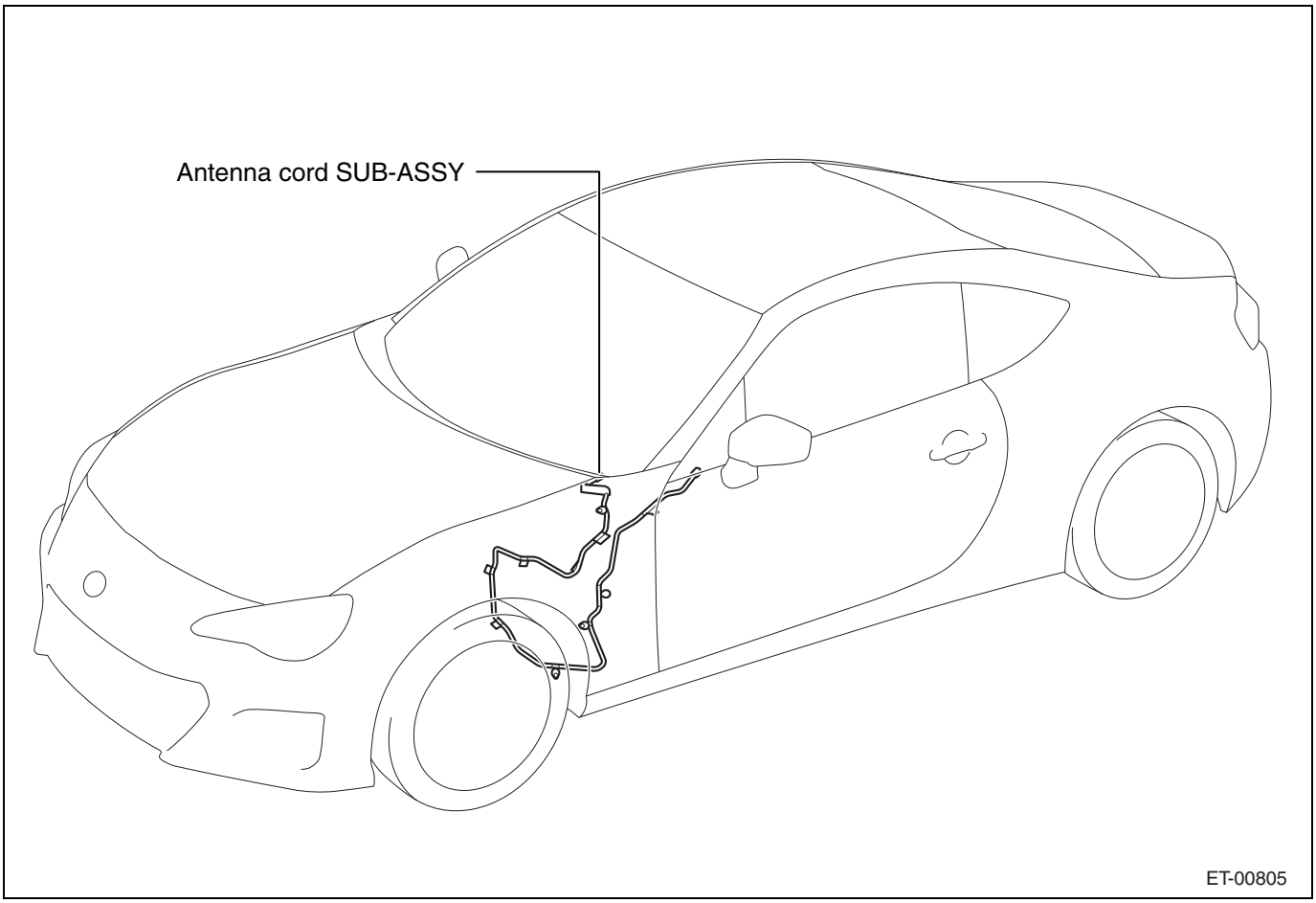

Removal

WARNING:
The following service operations include the works which may affect the SRS airbag system. Before starting work, always check the precautions for the SRS airbag system. (Refer to RS - 5)

1. Precautions
   CAUTION:
   After turning the ignition switch to OFF, you may have to wait for a while before disconnecting the battery terminals. Check appropriate precautions for battery terminal disconnection before proceeding. (Refer to IN - 6)
2. Disconnection of the battery ground terminal
   (1) Turn the ignition switch to OFF, disconnect the battery ground terminal, and then wait for 60 seconds before starting the work.
   WARNING:
   As the airbag and pretensioner system is equipped with a backup power supply, if you start work within 60 seconds of disconnecting the battery ground terminal, the airbag may accidently deploy.
3. Removal of the instrument panel SUB-ASSY (Refer to IT - 6)
4. Removal of the air conditioner radiator ASSY (Refer to AC - 101)

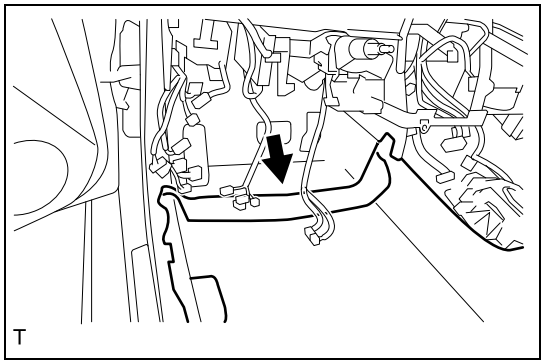

5. Removal of the antenna cord SUB-ASSY
   (1) Turn over the front end of the driver's seat floor mat.
   (2) Disconnect each connector.

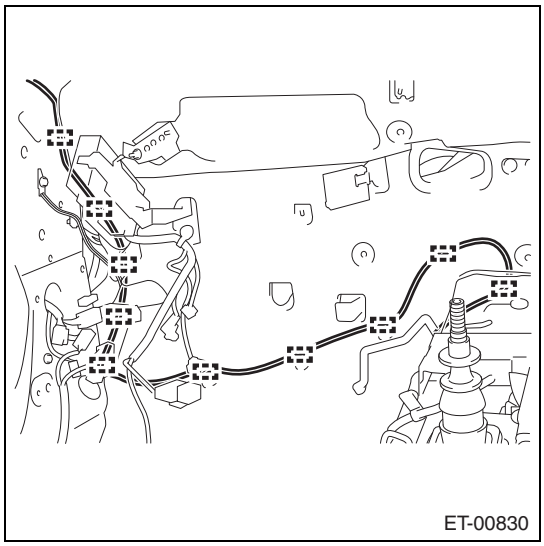

   (3) Release the ten clamps and remove the antenna cord SUB-ASSY.

Installation

1. Installation of the antenna cord SUB-ASSY
   (1) Fasten the ten clamps and install the antenna cord SUB-ASSY.
   (2) Connect each connector.
   (3) Return the floor mat to its original position.
2. Installation of the air conditioner radiator ASSY (Refer to AC - 126)
3. Installation of the instrument panel SUB-ASSY (Refer to IT - 6)
4. Connection of the battery ground terminal
   Standard value:T=6.0N·m {61kgf·cm} {4.4 ft·lbf}
5. Inspection of airbag warning light (Refer to RS - 53)
6. Settings when removing/installing battery terminals (Refer to IN - 10)

Antenna cord No. 2

Exploded view

AV

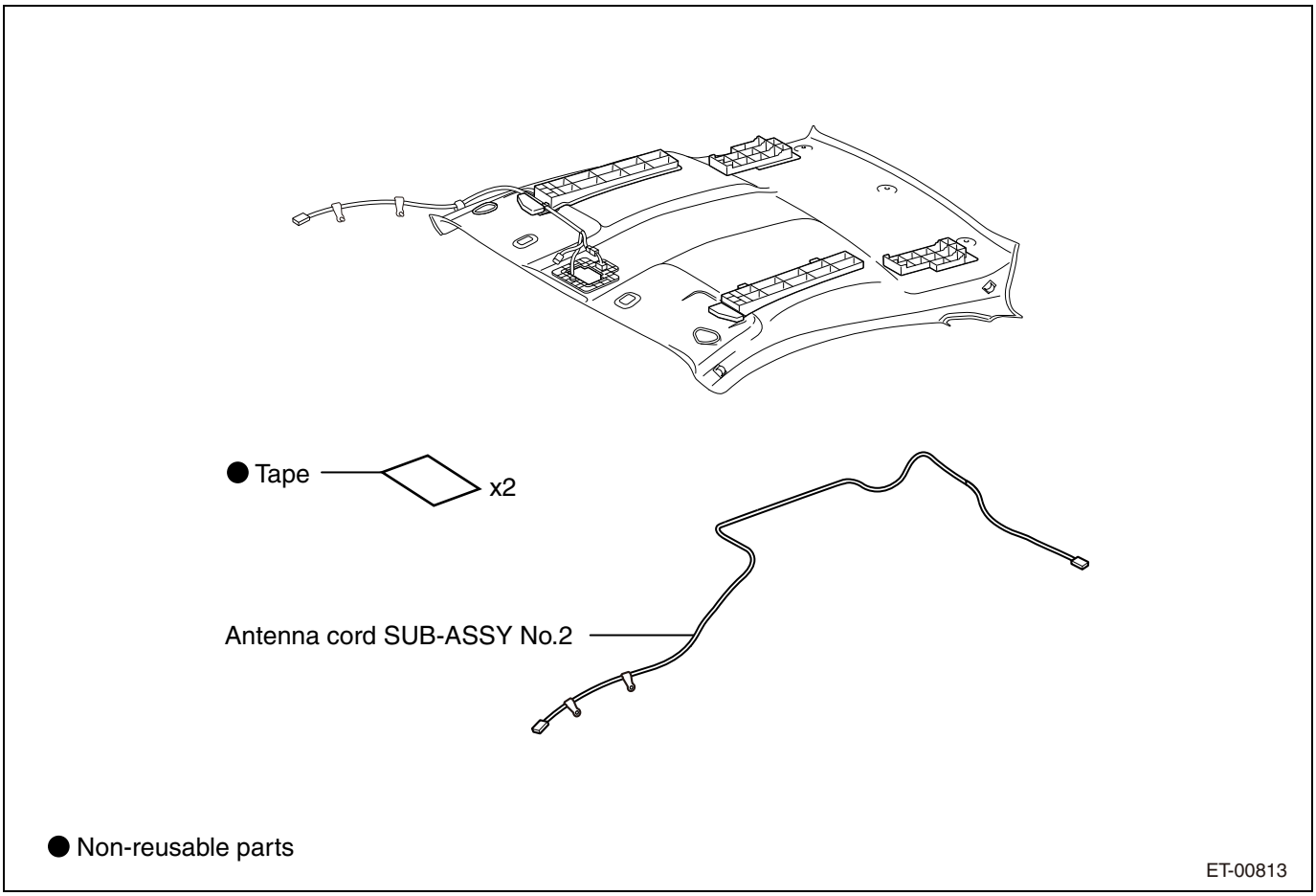

Removal

1. Disconnection of the battery ground terminal (Refer to IN - 6)
2. Removal of the roof head lining ASSY (Refer to IT - 47)
3. Removal of the antenna cord SUB-ASSY No.2
   (1) Remove the 2 pieces of fixing tape.

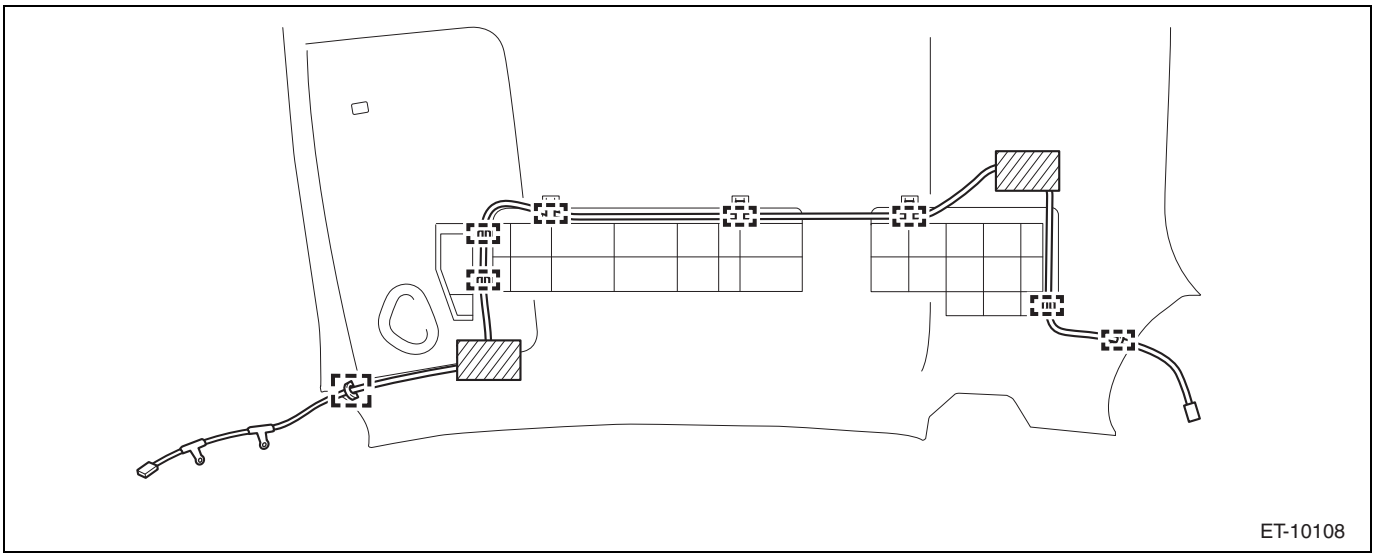

Captions in illustration

	Fixing tape (86359SC000/TAPE)	-	-

(2) Release the eight clamps and remove the antenna cord No.2 from the roof head lining ASSY.

Installation

1. Installation of the antenna cord SUB-ASSY No.2
   (1) Set the positioning tape areas of the antenna cord SUB-ASSY No.2 so that it matches the diagram, and fasten the 8 clamps.

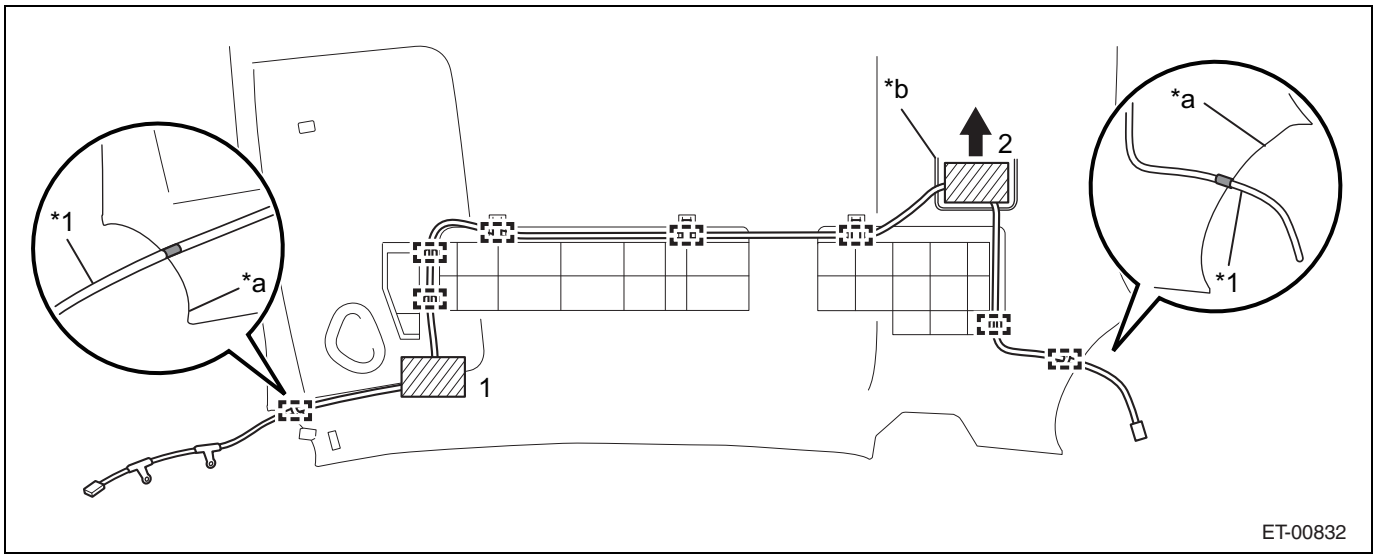

Captions in illustration

*1	Antenna cord SUB-ASSY No.2	*b	Marked line
*a	Roof head lining ASSY edge	-	-
	Fixing tape (86359SC000/TAPE)		Positioning tape

(2) Install the antenna cord SUB-ASSY No.2 along the marked line of the roof head lining ASSY using fixing tape.
NOTE:
- Secure the antenna cord SUB-ASSY No.2 in the order indicated in the diagram.
- When using fixing tape, cut it to the desired size. (the size of 50 mm ×80 mm or 2.0 in ×3.2 in is recommended)
- When applying the second piece of fixing tape, pull any slack in the antenna cord SUB-ASSY No.2 in the direction indicated by the arrow in the diagram before securing it in place.

2. Installation of the roof head lining ASSY (Refer to RS - 5)
3. Connection of the battery ground terminal
   Standard value:T=6.0N·m {61kgf·cm} {4.4 ft·lbf}
4. Settings when removing/installing battery terminals (Refer to IN - 10)
5. Inspection of airbag warning light (Refer to RS - 53)

AUX unit

Parts location

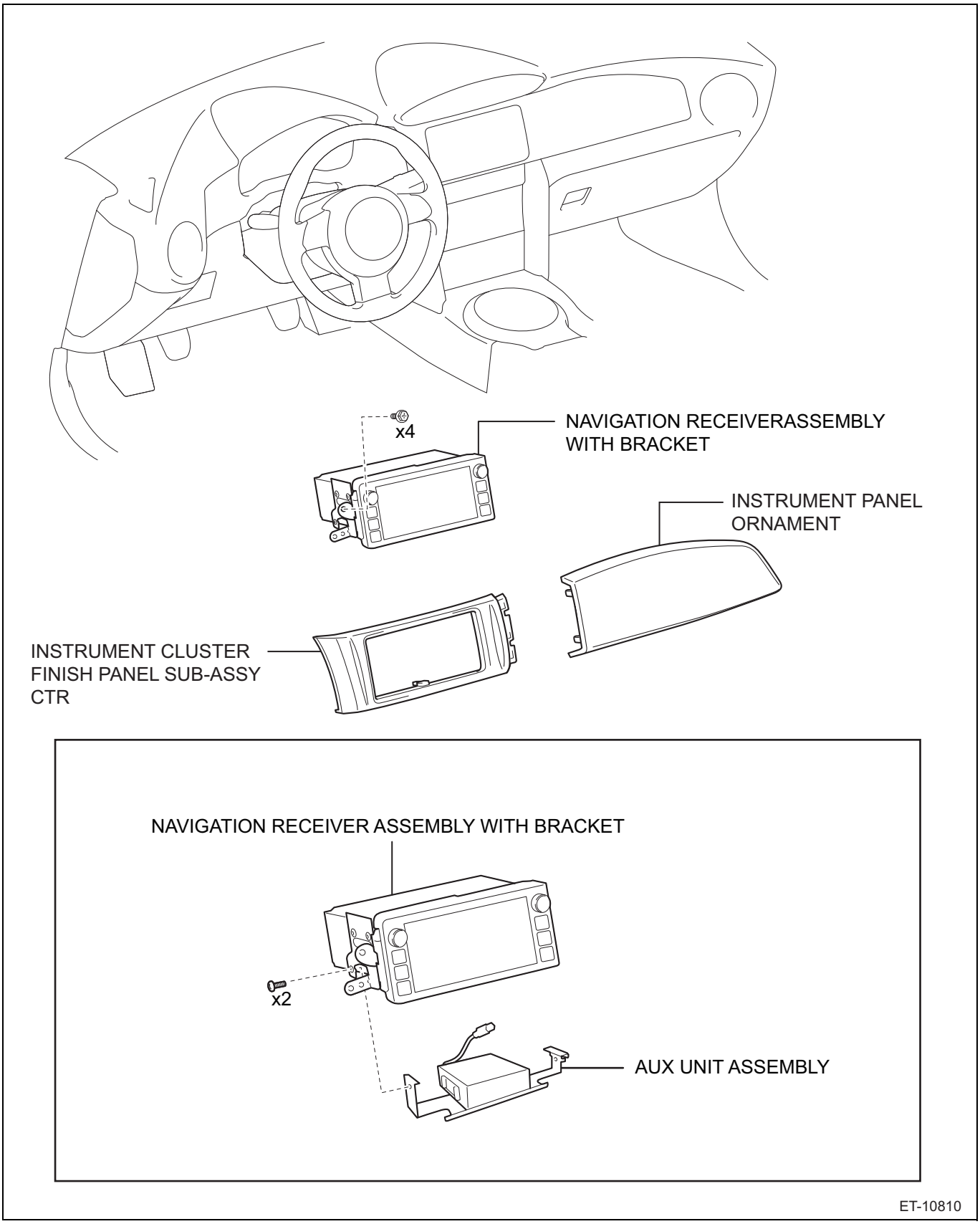

Removal

1. Disconnection of battery ground terminal (Refer to IN - 6)
2. Removal of instrument panel ornament (Refer to IT - 22)
3. Removal of instrument cluster finish panel SUB-ASSY CTR (Refer to IT - 23)
4. Removal of navigation receiver ASSY (Refer to AV - 16)

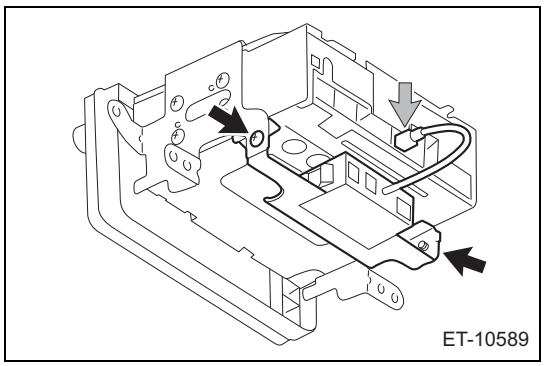

5. Removal of AUX unit ASSY
   (1) Disconnect the cable.
   (2) Remove the 2 screws, and remove the AUX unit ASSY from the radio receiver bracket or navigation receiver bracket.

AV

Installation

1. Installation of AUX unit ASSY
   (1) Using the 2 screws, install the AUX unit ASSY to the radio receiver bracket or navigation receiver bracket.
   (2) Connect the cable.
2. Installation of navigation receiver ASSY
3. Installation of the instrument cluster finish panel SUB-ASSY CTR (Refer to IT - 29)
4. Installation of the instrument panel ornament (Refer to IT - 29)
5. Connection of the battery ground terminal
   Standard value:T=6.0N·m {61kgf·cm} {4.4 ft·lbf}
6. Settings when removing/installing battery terminals (Refer to IN - 10)

Stereo jack adapter

Components

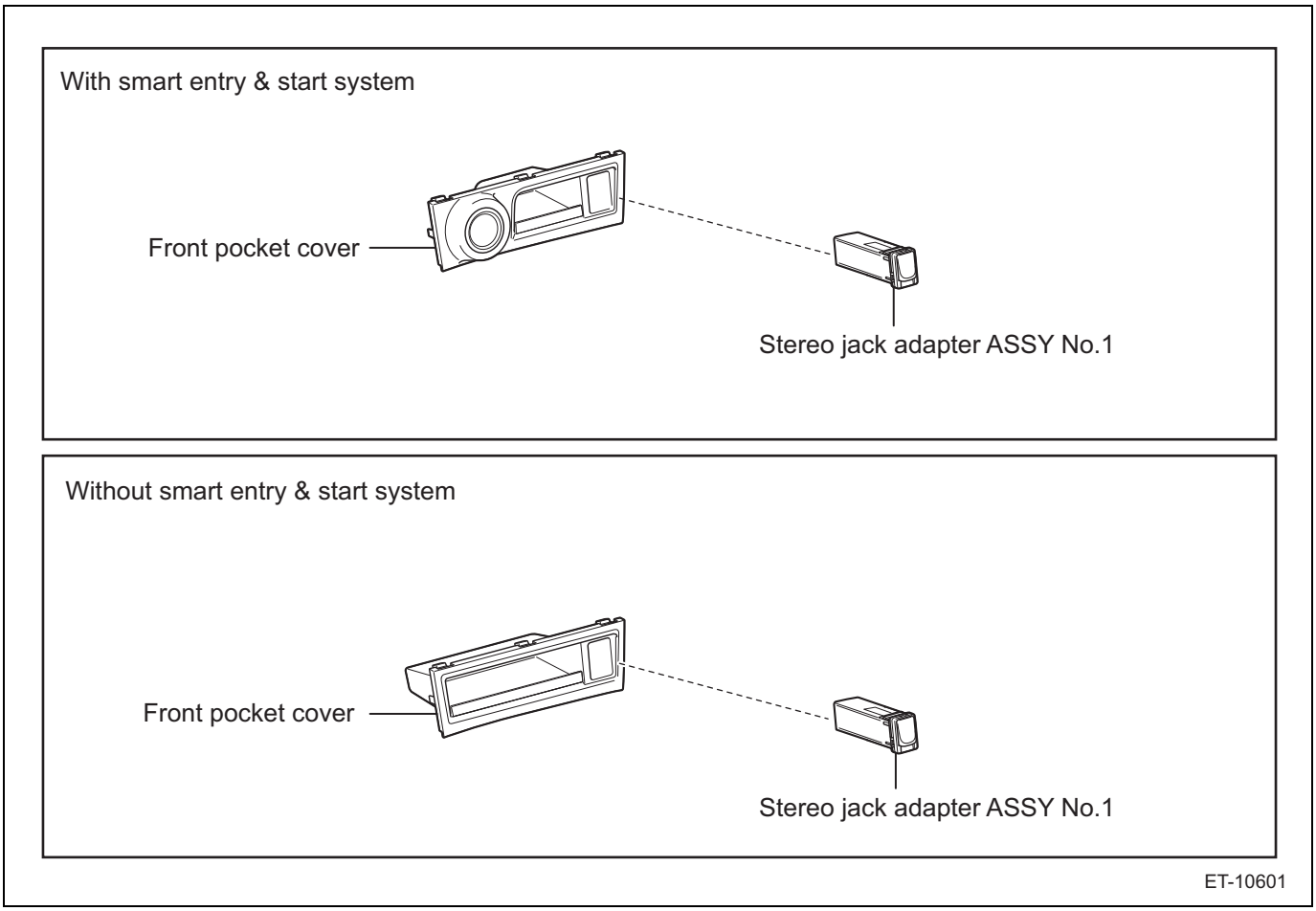

Removal

1. Removal of the front pocket cover (with entry & start system) (Refer to IT - 33)
2. Removal of the front pocket cover (without entry & start system) (Refer to IT - 34)

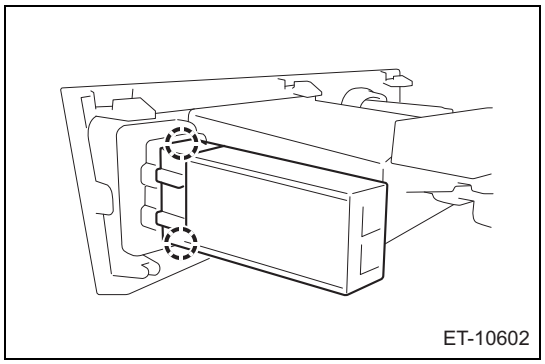

3. Removal of the stereo jack adapter ASSY No.1
   (1) Unhook the two tabs and remove the stereo jack adapter ASSY No.1.

Installation

1. Installation of the stereo jack adapter ASSY No.1
   (1) Engage the two tabs and install the stereo jack adapter ASSY No.1.
2. Installation of the front pocket cover (with entry & start system) (Refer to IT - 39)
3. Installation of the front pocket cover (without entry & start system) (Refer to IT - 39)

Microphone

Components

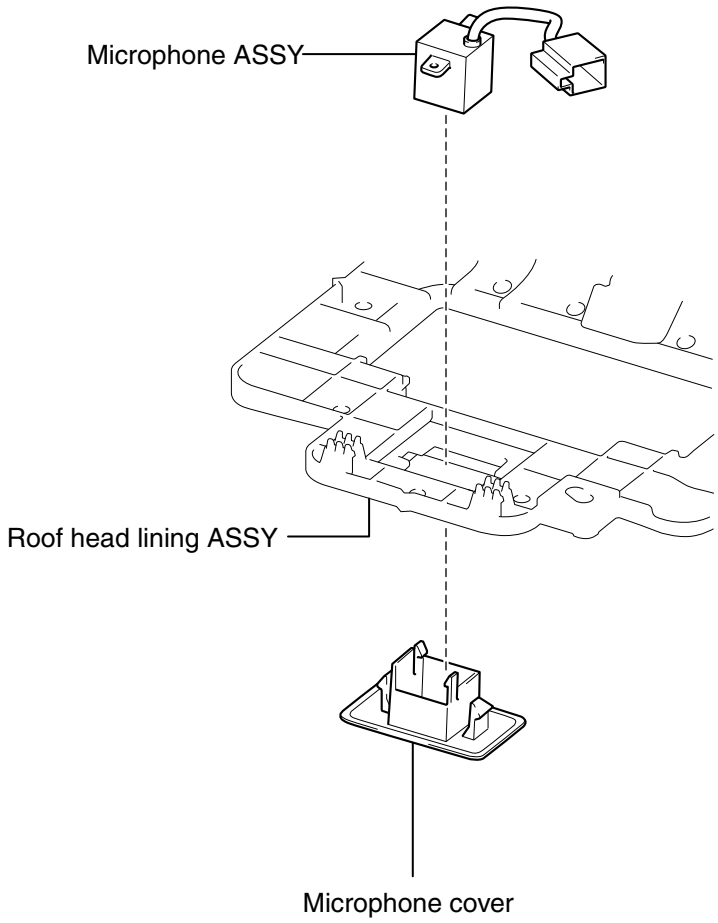

ET-00823

Removal

1. Disconnection of the battery ground terminal (Refer to IN - 6)
2. Removal of the roof head lining ASSY (Refer to IT - 47)

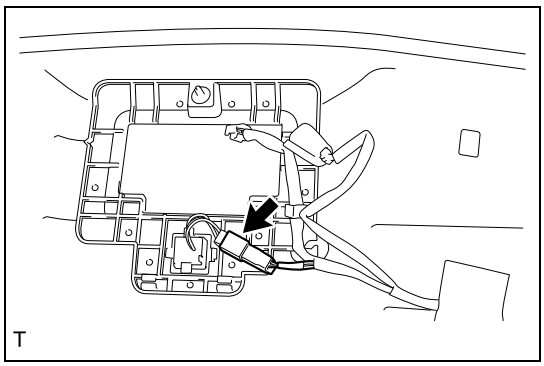

3. Remove the microphone ASSY.
   (1) Disconnect the connector.

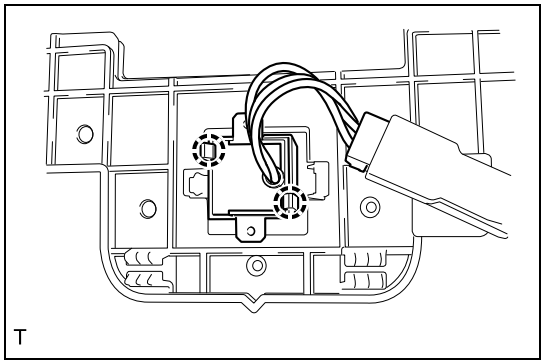

(2) Unhook the two tabs and remove the microphone ASSY.

AV

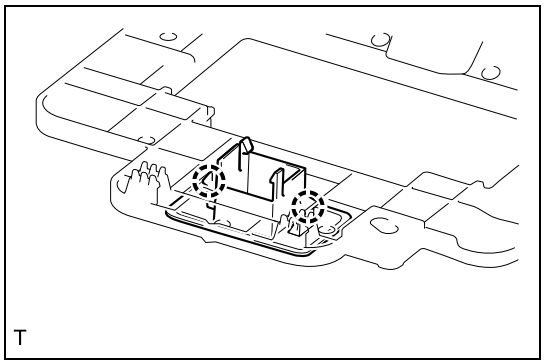

4. Remove the microphone cover.
   (1) Unhook the two tabs and remove the microphone cover.

Installation

1. Install the microphone cover.
   (1) Engage the two tabs and install the microphone cover.
2. Install the microphone ASSY.
   (1) Engage the two tabs and install the microphone ASSY.
   (2) Connect the connector.
3. Installation of the roof head lining ASSY (Refer to IT - 56)
4. Connection of the battery ground terminal
   Standard value:T=6.0N·m {61kgf·cm} {4.4 ft·lbf}
5. Settings when removing/installing battery terminals (Refer to IN - 10)

Noise filter

Exploded view

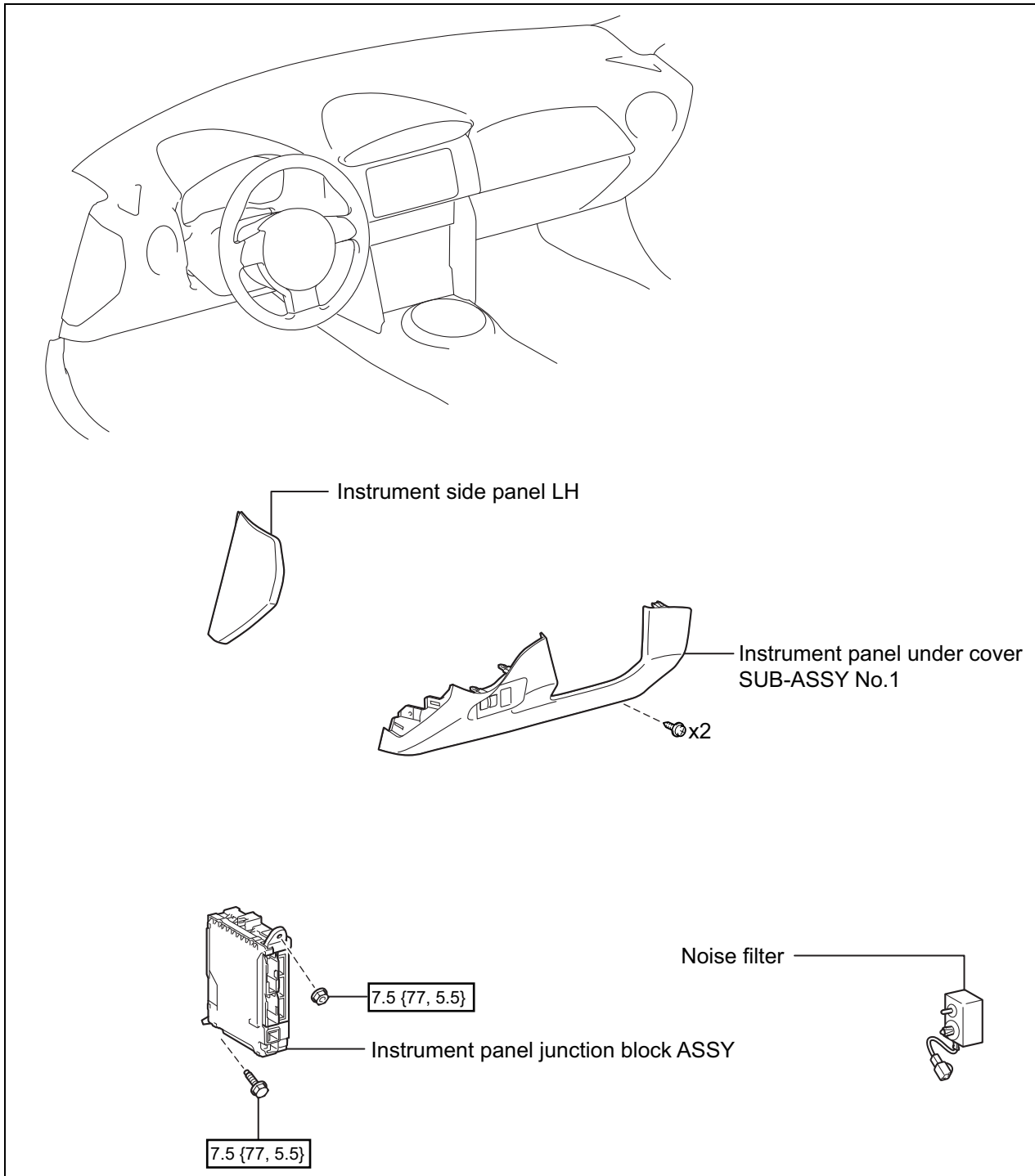

Removal

1. Disconnection of the battery ground terminal (Refer to IN - 6)

2. Removal of the instrument side panel LH (Refer to IT - 24)
3. Removal of the instrument panel under cover SUB-ASSY No. 1 (Refer to ME - 68)
4. Removal of the instrument panel junction block ASSY (Refer to PD - 25)
5. Removal of the noise filter
   (1) Disconnect the connector.

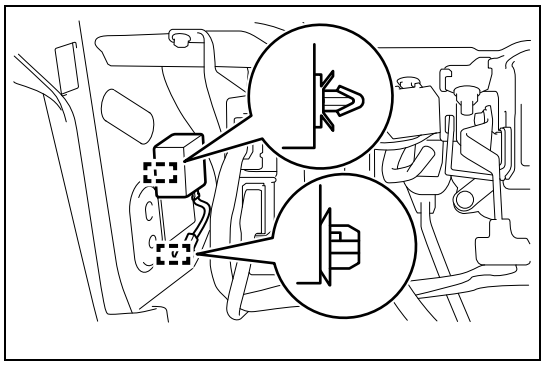

   (2) Release the two clamps.

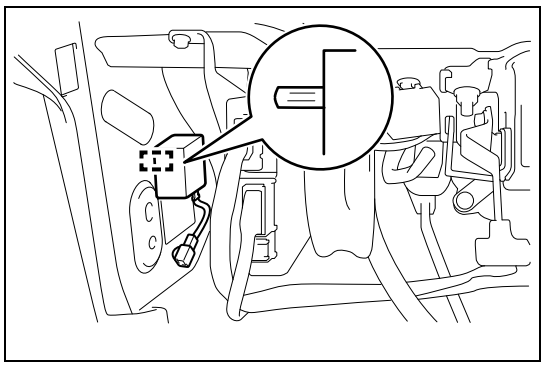

   (3) Release the guide and remove the noise filter.

Installation

1. Installation of the noise filter
   (1) Press in the guide and install the noise filter.
   (2) Fasten the two clamps.
   (3) Connect the connector.
2. Installation of the instrument panel junction block ASSY (Refer to PD - 28)
3. Installation of the instrument panel under cover SUB-ASSY No.1 (Refer to ME - 69)
4. Installation of the instrument side panel LH (Refer to IT - 29)
5. Connection of the battery ground terminal
   Standard value:T=6.0N·m {61kgf·cm} {4.4 ft·lbf}
6. Settings when removing/installing battery terminals (Refer to IN - 10)

Unit inspection

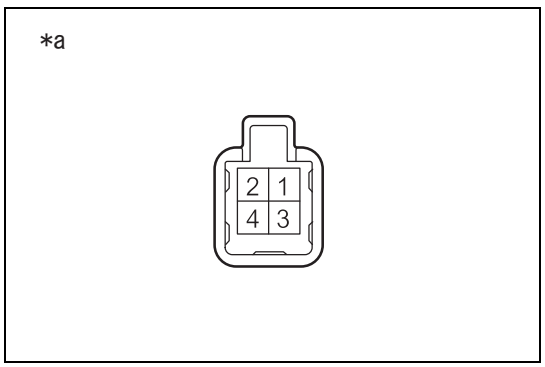

1. Inspection of the noise filter
   (1) Measure the resistance between the terminals.

Resistance

Inspection terminals	Inspection conditions	Standard value
1 - 2	Always	10 kΩ or more
1 - 4	Always	Less than 1 Ω

Captions in illustration

*a	Connector not connected (Noise filter)

Rear view camera ASSY

Exploded view

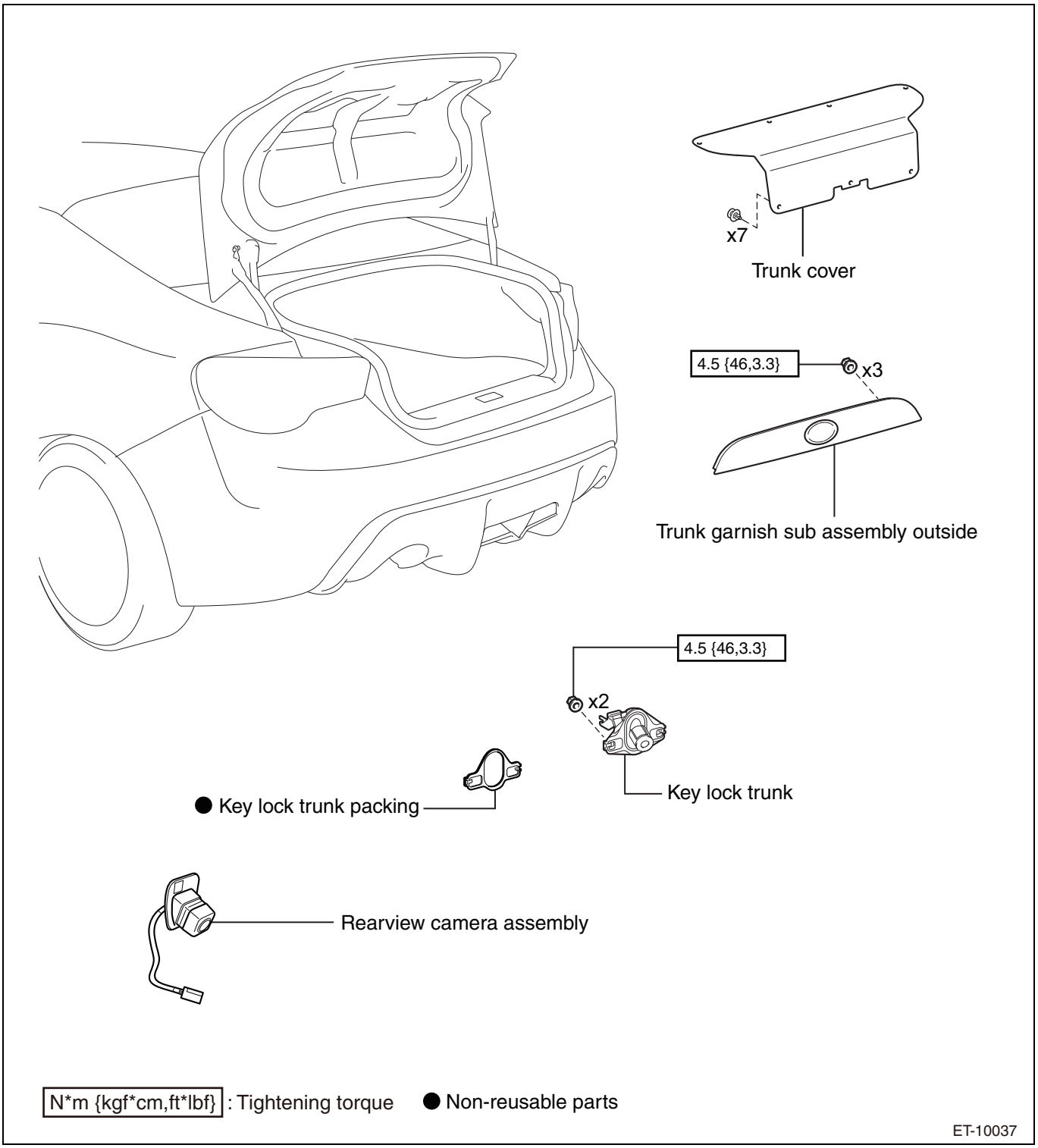

Removal

1. Removal of the trunk cover (Refer to DH - 61)
2. Removal of key lock trunk (Refer to DL - 106)
3. Removal of the trunk garnish SUB-ASSY outside (Refer to ET - 52)

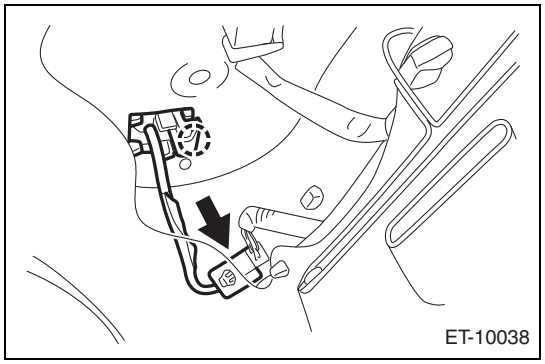

4. Removal of the rear view camera ASSY
   (1) Disconnect the rear view camera ASSY connector.
   (2) Disengage the tab and remove the rear view camera ASSY.

AV

Installation

1. Installation of the rear view camera ASSY
   (1) Engage the tab and install the rear view camera ASSY.
   (2) Reconnect the rear view camera ASSY connector.
2. Installation of the trunk garnish SUB-ASSY outside (Refer to ET - 52)
3. Installation of key lock trunk (Refer to DL - 107)
4. Installation of the trunk cover (Refer to DH - 62)

Inspection

1. Application of target point marking
   (1) Park the vehicle on a level surface with ample space to work behind the vehicle.

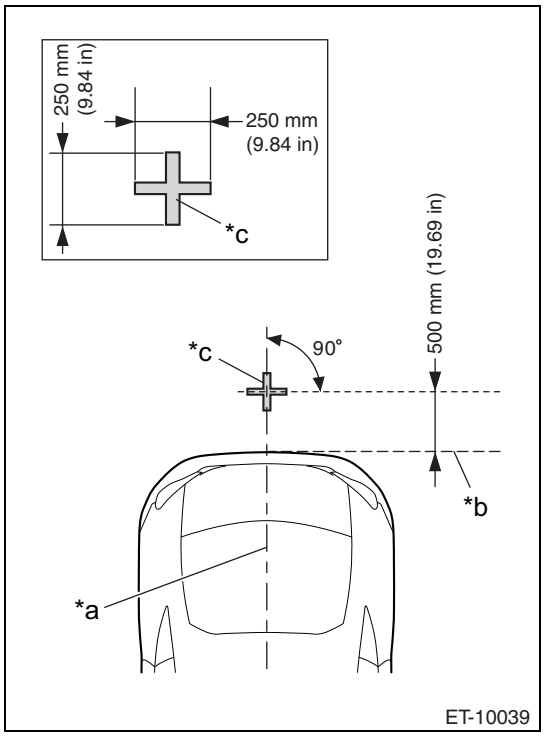

   (2) Apply tape that serves as the target point marking to the floor behind the vehicle.
   NOTE:
   Use tape with a width of approx. 30 to 50 mm (1.18 to 1.97 in) and a bright color as the marking tape.

Captions in illustration

*a	Vehicle center
*b	Bumper rear edge
*c	Target point

2. Check of marker position
   (1) Check the marker position.
      (a) Pull the parking brake lever.
      (b) With the brake pedal depressed, move the select or gearshift lever to reverse.
      (c) Display the rear-view screen to check the target point position.
   (2) Check applicable items as required.
      (a) The rear-view screen is not displayed.
      Check the connection status of the back sensor and rear view camera.
      • Inspection of radio function (Refer to AV - 10)

- Inspection of navigation function (Refer to AV - 11)

(b)The marker position is misaligned or not displayed.

The rear view camera body or vehicle installation area may be deformed.

Check the rear view camera and vehicle installation area and repair or replace as required.

AV

Battery / charging

Charging system (FA20)

Precautions BH-2
Parts location BH-2
On-vehicle inspection BH-3
List of diagnostic codes BH-6
Symptom table BH-6
How to troubleshoot BH-6
Checking / clearing diagnostic codes BH-8
Circuit figure BH-9
ECM terminal arrangement BH-10
Data monitor / active test BH-10
Failsafe list BH-11
P0562 . . . . . BH-12
P0563 . . . . . BH-15
P065A BH-17
P0A3B BH-18
P1C00 . . . . . BH-18
U0077 . . . . . BH-20
U1712 . . . . . BH-24
U171F BH-27

Alternator (FA20)

Exploded view BH-30
Removal BH-31
Disassembly BH-32
Inspection BH-33
Assembly BH-34
Installation BH-35

Charging system (FA20)

Precautions

1. Never disconnect the battery while the engine is running.
2. Check that the battery cables are correctly connected to the terminals.
3. Do not connect the battery cables during quick charging.

Parts location

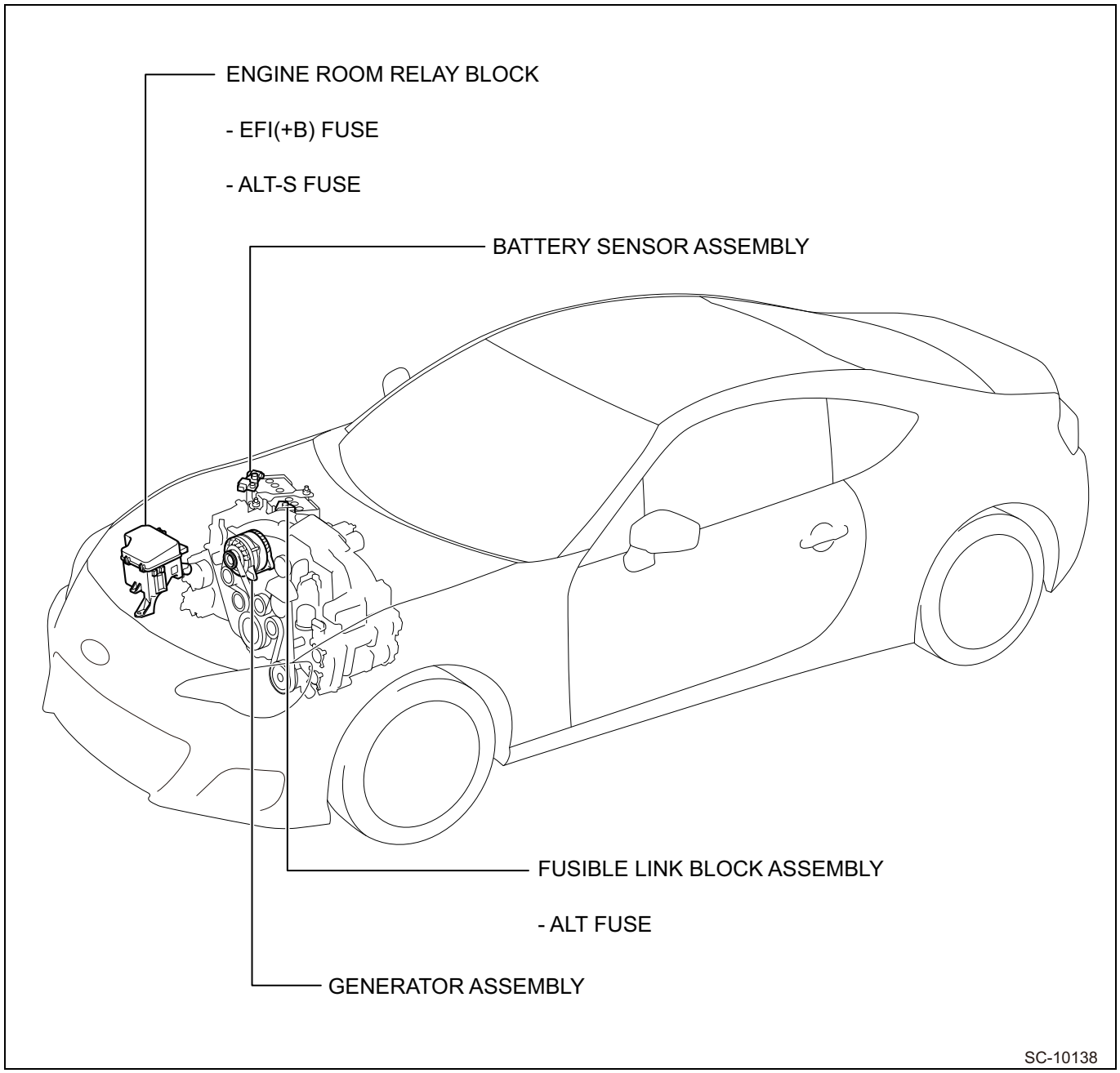

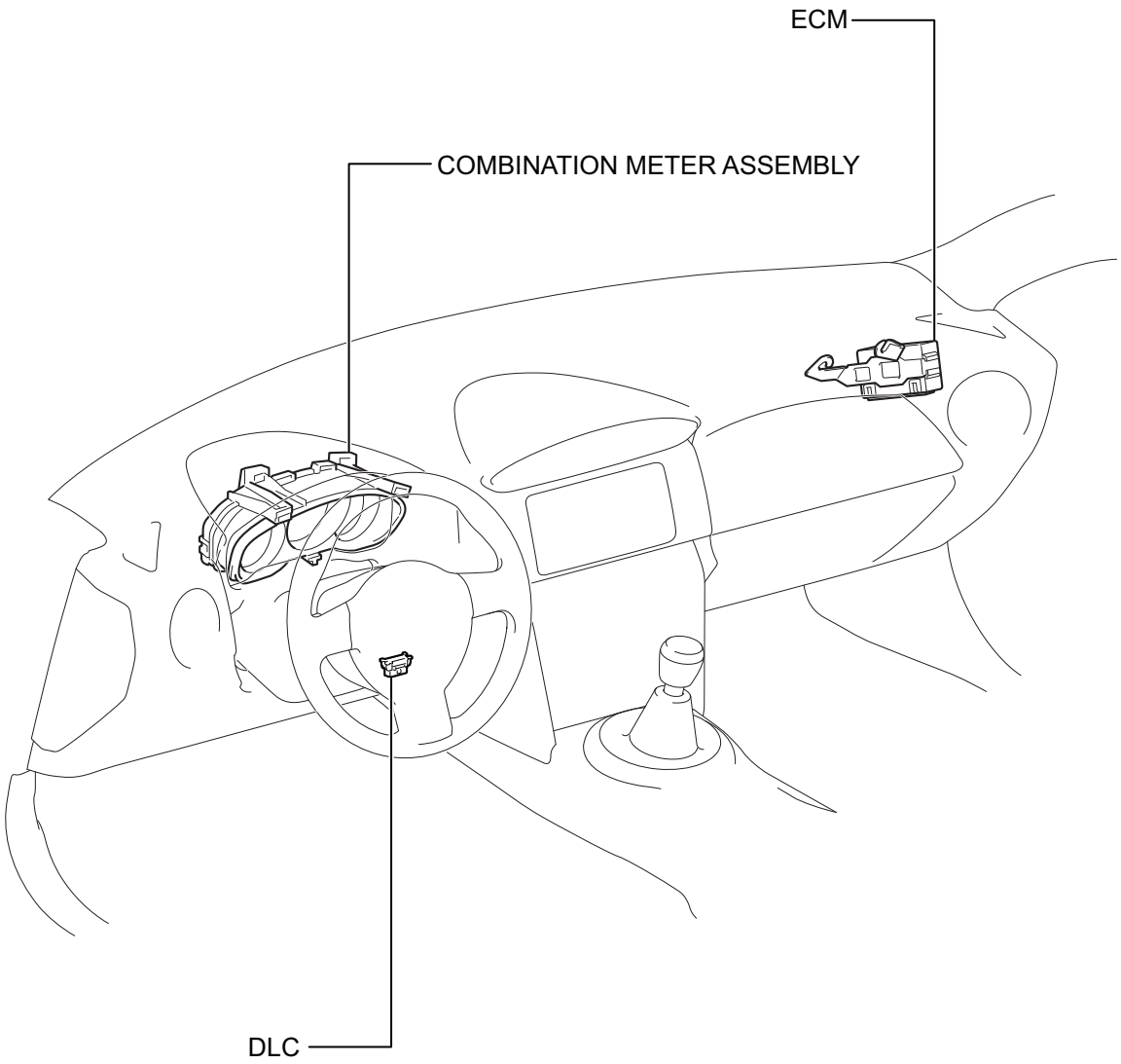

On-vehicle inspection

CAUTION:

- Never disconnect the battery while the engine is running.
- Check that the battery cables are correctly connected to the terminals.
- Do not connect the battery cables during quick charging.

1. Inspection of the battery fluid level
   (1) Fluid level inspection
      (a)If the level is below LOW, either replace the battery or replenish the level by pouring in distilled water.

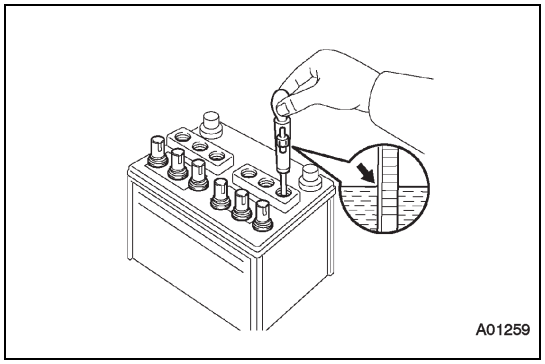

2. Checking of the battery specific gravity
   (1) Check the specific gravity of the fluid in each battery cell.
   Standard value: 1.25 - 1.29 (At fluid temperature of 20°C {68°F})
   NOTE:
   If this is less than the standard value, recharge the battery.

BH

3. Battery voltage check
   (1) In order to remove the surface charge, with the ignition turned to IG OFF, turn the headlight switch to ON for approximately 20 to 30 seconds.
   (2) Turn the headlight switch to OFF.

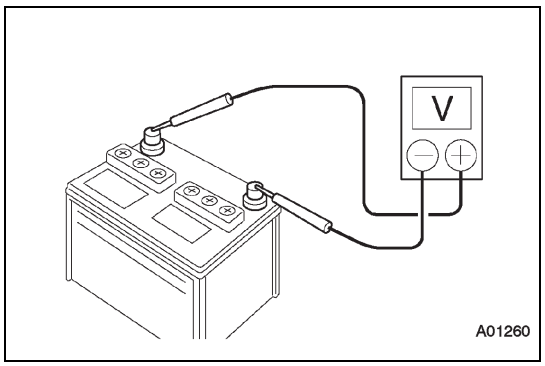

   (3) Measure the battery voltage between terminals.
   Voltage

Inspection terminals	Inspection conditions	Standard value
Positive battery terminal - Negative battery terminal	Fluid temperature 20°C {68°F}	12.5 - 12.9 V

   NOTE:
   If this is less than the standard value, recharge the battery.

4. Inspection of the battery terminals, fusible links, and fuses
   (1) Check that the battery terminals are not loose or corroded.
   (2) Check that there is continuity through the fusible links and fuses.
5. Checking of the fan & alternator V-belt
   NOTE:
   Only perform this inspection if you plan on reusing it. (Refer to EM - 8)
6. Inspection of the alternator wiring harness
   (1) Check that there are no cracks or deterioration in the wiring harness.
7. Checking for strange noises originating from the alternator
   (1) Check that no strange noises come from the alternator during engine starting.
8. Inspection of the charge warning light
   (1) Warm up the engine and turn the ignition to IG OFF.
   (2) Turn all of the electrical device switches to OFF.
   (3) Turn the ignition to IG ON and confirm that the charge warning light illuminates.
   (4) Confirm that this light turns off after starting the engine.
   NOTE:
   If the light does not behave as specified above, perform troubleshooting for the charge warning light circuit.

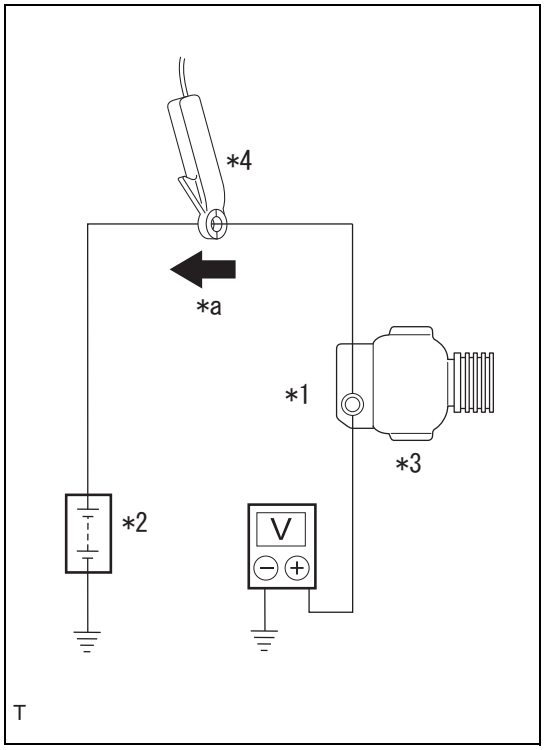

9. No load test
   (1) Inspection of the charging circuit
      (a)When under no load, measure the battery voltage when the engine speed is increased up to 2000 r/min.

Voltage

Inspection terminals	Inspection conditions	Standard value
B terminal - Chassis ground	20 A or less	11.3 - 15.6 V

Captions in illustration

*1	B Terminal
*2	Battery
*3	Alternator
*4	AC/DC 400 A probe
*a	Current

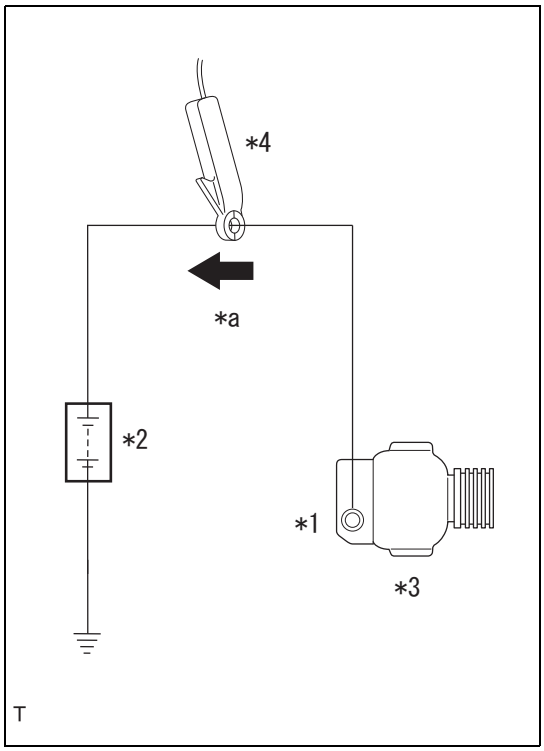

10. Load test
   (1) Start under the same conditions as the no load test, turn the headlights to high beam and the heater blower switch to Hi and immediately measure the current when the engine speed reaches 2000 r/min.

Current value

Inspection terminals	Inspection conditions	Standard value
B terminal - Positive battery terminal	Always	30 A or more

Captions in illustration

*1	B Terminal
*2	Battery
*3	Alternator
*4	AC/DC 400 A probe
*a	Current

NOTE:
If the battery is fully charged even though a current is shown that is at the standard value or less, as the current becomes small, operate other devices such as the wiper motor or the rear window defogger to increase the load and perform the measurement again.

11. Inspection of the charging control system
   (1) Inspection of the wiring harness
      (a)Disconnect the engine control computer connector A33.
      (b)Disconnect the alternator ASSY connector A81.
      (c)Measure the resistance between the terminals.

Resistance (open circuit check)

Inspection terminals (Terminal symbol)	Inspection conditions	Standard value
A33-21 (LIN) - A81-1 (C)	Always	Less than 1 Ω

Resistance (short circuit check)

Inspection terminals (Terminal symbol)	Inspection conditions	Standard value
A33-21 (LIN) and A81-1 (C) - other terminals and chassis ground	Always	10 kΩ or more

List of diagnostic codes

Charging control

Diagnostic codes	Diagnostic items	Charge warning light illumination.	Code recorded	Reference pages
P0562	[System Voltage Low]	0	0	BH - 12
P0563	[System Voltage High]	0	0	BH - 15
P065A	[Generator/Alternator System Performance]	0	0	BH - 17
P0A3B	[Generator/Alternator Over Temperature]	0	0	BH - 18
P1C00	[Battery Monitor Module "A" Performance]	×	0	BH - 18
U0077	[LIN Communication Bus "ECM/PCM" Off]	0	0	BH - 20
U1712	[Lost LIN Communication With Battery "1" Monitor Module]	×	0	BH - 24
U171F	[Lost LIN Communication With Generator]	0	0	BH - 27

Symptom table

CAUTION:

Firstly, inspect the charging control system fuses and relays.

Charging control system

Symptoms	Inspection items	Reference pages
Charge warning light illumination.	Battery	BH - 3
	Alternator ASSY	BH - 31
	Charging system	BH - 3

How to troubleshoot

1	Bring in the car

Next

2	Phenomenon check

Next

3	Inspection of the CAN communication system (Refer to NW - 30)

(1) Perform an inspection of CAN communication functionality.

NG → Progress to the "CAN communication section". (Refer to NW - 30)

OK

4	Checking the diagnostic codes (Refer to BH - 8)

(1) DTC check
(2) Clearing diagnostic code
(3) Rechecking the diagnostic codes

Result

Result	Go to
Code output present	A
No code output	B

B → Go to Step 6

A

5	List of diagnostic codes (main inspection parts) or troubleshooting for each code

Result

Result	Go to
Fault location not confirmed	A
Fault location confirmed	B

B → Go to Step 11

A

6	Symptom table (Refer to BH - 6)

Result

Result	Go to
Fault location not confirmed	A
Fault location confirmed	B

B → Go to Step 11

A

7	On-vehicle inspection (Refer to BH - 3)

Result

Result	Go to
Fault location not confirmed	A
Fault location confirmed	B

B → Go to Step 11

A

8	Inspection with SSM4 (Refer to BH - 10)

(1) Check the data monitor and perform the active test.

Result

Result	Go to
Fault location not confirmed	A
Fault location confirmed	B

B → Go to Step 11

A

9	Inspection of the ECM terminal voltage and circuit (Refer to BH - 10)

NG → Go to Step 11

OK

10	Inspection for problems that do not normally occur (Refer to IN - 32)

Next

11	Repair faulty parts

Next

12	Checking the diagnostic codes (Refer to BH - 8)

Next

Completed

Checking / clearing diagnostic codes

1. Checking diagnostic codes (reading with SSM4)
   (1) With the ignition turned to IG OFF, connect the SSM4 to the DLC3.
   (2) Turn IG to ON, and turn on the SSM4.
   (3) Follow the SSM4 display and select [Inspection of BRZ] →[Each System] →[Engine Control System] →[DTC] to check the diagnostic codes.
2. Clearing diagnostic code records (Cleared by the SSM4)
   (1) With the ignition turned to IG OFF, connect the SSM4 to the DLC3.
   (2) Turn IG to ON, and turn on the SSM4.
   (3) Follow the SSM4 display and select [Inspection of BRZ] →[Each System] →[Engine Control System] →[Clear Memory] to delete the diagnostic codes.
   CAUTION:
   - If deletion is not possible, retry it after turning the ignition to IG OFF and then on again.
   - Do not use the SSM4 to delete diagnostic codes until the cause of the trouble has been identified.

Circuit figure

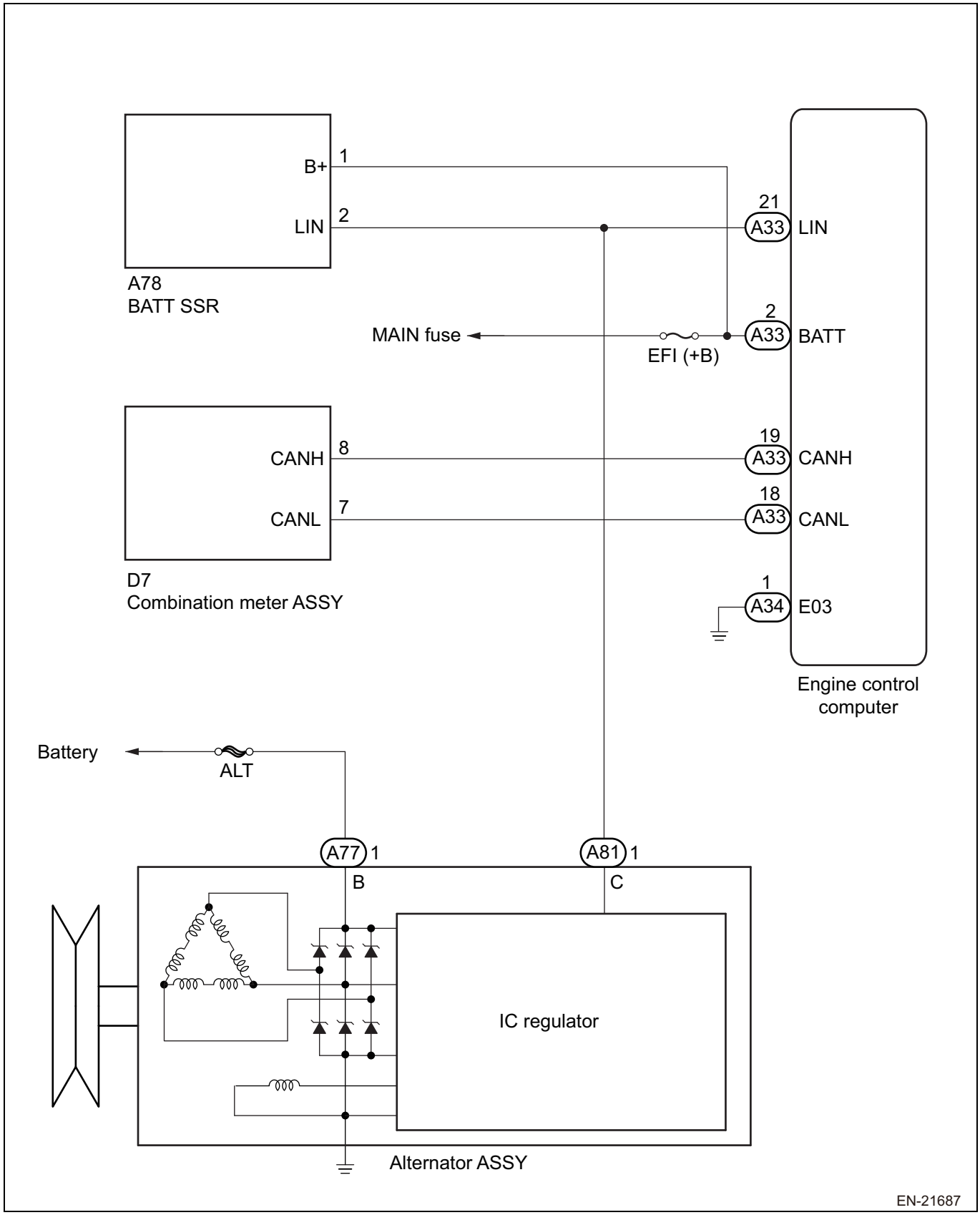

ECM terminal arrangement

1. Engine control computer

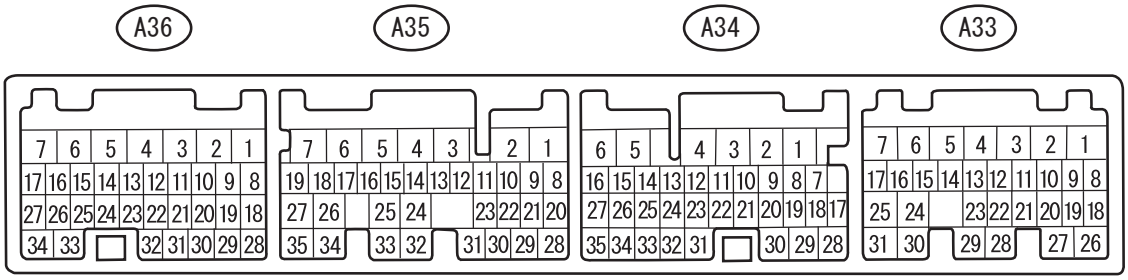

Terminal No. (Terminal symbol)	Input Output	Measuring condition	Standard value
A35-22 (VCP2)←→A35-30 (EPA2)	Output	IG ON	4.5 - 5.5 V
A33-11 (IB)←→A35-30 (EPA2)	Input	IG ON	0.5 - 4.5 V
A33-24 (THB)←→A35-30 (EPA2)	Input	IG ON (Battery temperature sensor surrounding temperature of 20 to 50°C {68 to 122°F})	1.1 - 2.4 V
A34-1 (E03) ←→Chassis ground	Ground	Always (Resistance check)	Less than 1 Ω
A33-2 (BATT)←→A34-1 (E03)	Input	Always	11 to 14 V
A35-18 (ALT)←→A34-1 (E03)	Input	Idling	Pulse generation (waveform 1)

Data monitor / active test

1. Data monitor
   (1) Use the SSM4 and follow the display to bring up the [Normal sampling] screen in order to inspect the computer data.
   CAUTION:
   Due to slight measurement differences and factors such as differences in the measurement environment or vehicle aged-related variation, the value of the data monitor/active test can be widely varied. It is difficult to obtain a precise standard value (determined value) for this. Therefore, there may be cases where a fault is present, even if it is within the reference value.

SSM4 screen: [Inspection of BRZ] →[Each System] →[Engine Control System] →[Data monitor] →[Normal sampling]

Item name	Description/display range	Normal value	Remarks (Main inspection items during a malfunction)
[Control module voltage]	• Indicates the battery voltage. • Display range: 0 to 65.535 V	11 to 14 V: During idling	Reference value: • IG ON: 12.5 V • While cranking: 9.834 V • At idling speed (after being warmed up): 13.359 V If the battery voltage 11 V or less, other systems may be affected.
[Battery Current]	• Indicates the battery current. • Display range: -125 to 125 A	Changes depending on the alternator generation amount: After warming up, when driving	When a malfunction occurs, it may be due to a problem with the IB voltage system or sensor power supply.
[Battery Temperature]	• Indicates the battery ambient temperature which is calculated from the output from the battery temperature sensor (battery current sensor ASSY). • Display range: -40 to 6513.5°C	Changes depending on the actual temperature: After warming up, when driving	When a malfunction occurs, it may be due to a problem with the THB voltage system or sensor power supply.
[Alt Voltage - Non Active Test]	• Indicates the requested voltage when forced driving of the regulator is not being carried out. • Display range: 0 - 80 V	Changes depending on the battery fluid temperature, driving conditions (12.4 - 14.8 V): After engine is started	When a malfunction occurs, it may be due to a problem with the charging control system.

Item name	Description/display range	Normal value	Remarks (Main inspection items during a malfunction)
[Alt Voltage - Active Test]	• Indicates the requested voltage when forced driving of the regulator is being carried out. • Display range: 0 - 80 V	Value of the request instruction voltage when the active test [Alternator control] is carried out: After engine is started	• Indicates the generation voltage during [Active Test]. • When a malfunction occurs, it may be due to a problem with the charging control system.
[ALT Duty]	• Indicates the charging control signal. • Display range: 0 to 255 %	Changes depending on the alternator generation amount: During charging control	When a malfunction occurs, it may be due to a problem with the charging control system.
[Alternator control mode]	• Indicates the alternator generation control mode. • Display range: 0 - 255 %	Changes depending on the alternator generation amount: During charging control	When a malfunction occurs, it may be due to a problem with the charging control system.
[Alternator Mechanical Error Status]	Displayed when it is determined that there is a mechanical error on the alternator.	0	-
[Alternator Electrical Output Error Status]	Displayed when it is determined that there is an electrical error on the alternator.	0	-
[Alternator High Temperature Error Status]	Displayed when it is determined that there is a high temperature error on the alternator.	0	-
[Alternator Communication Error Status]	Displayed when it is determined that there is a communication error on the alternator.	0	-
[Regulator Temperature]	Alternator regulator temperature	170°C or less	-

2. Active test

(1) Using SSM4, display the [Active Test] screen according to the screen and perform the system operation check.

SSM4 screen: [Engine Control System] →[Work Support] →[Active Test]

Item	Contents	Restrictions
[Alternator control]	Increases or decreases the alternator generation request voltage. Able to request within the range of 12.8 - 14.3 V.	While engine running

Failsafe list

If the following types of codes are recorded to the ECM, it enters fail safe mode.

Charging control

Diagnostic codes	Fail safe operation	Fail safe mode cancel condition
P0562 P0563 P065A P0A3B P1C00 U0077 U1712 U171F	Alternator instructions fixed.	Return to normal conditions.

DTC	P0562	System Voltage Low

Circuit figure

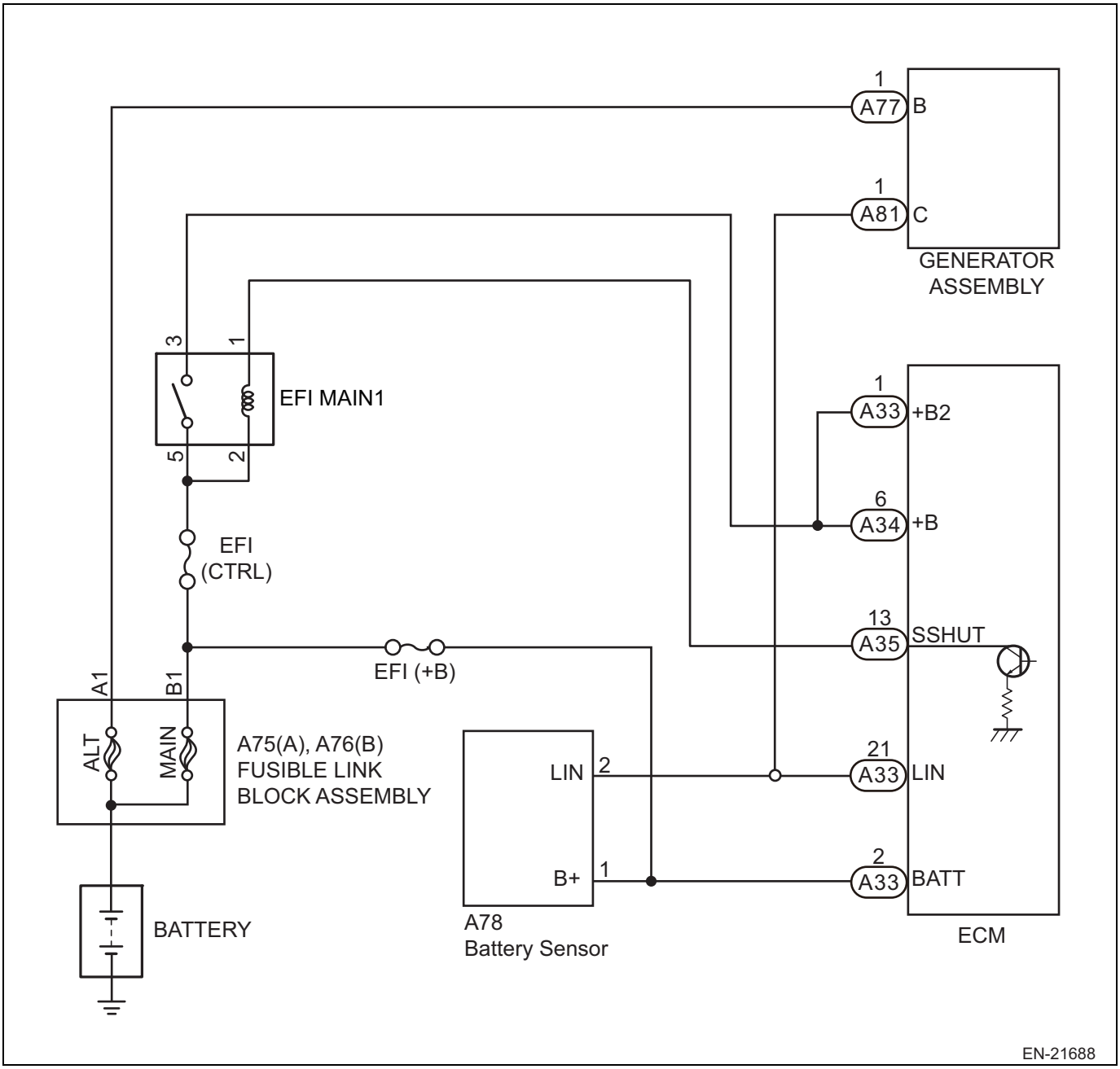

MONITOR STRATEGY

Frequency of Operation	Consecutive
Duration	3 seconds

TYPICAL ENABLING CONDITIONS

Engine speed	1500 RPM or more
Alternator generation control final output duty	50 % or more

TYPICAL MALFUNCTION THRESHOLDS

Battery voltage	Less than 10.8V

Inspection steps

1	Alternator inspection

(1) Start the engine.
(2) Idle the engine after warm-up.
(3) Measure the voltage between the alternator terminal B and chassis ground.

Resistance (short circuit check)

Inspection terminals	Inspection conditions	Standard value
Alternator terminal B (+) —chassis ground (-)	Always	10.8V or more

NG → Repair the alternator. (Refer to BH - 30)

OK

2	Alternator inspection

(1) Run the engine at 3,000 rpm.
(2) Measure the voltage between the alternator terminal B and chassis ground.

Resistance (short circuit check)

Inspection terminals	Inspection conditions	Standard value
Alternator terminal B (+) —chassis ground (-)	Always	10.8V or more

NG → Repair the alternator. (Refer to BH - 30)

OK

3	Check of battery terminal

(1) Turn the ignition switch to OFF.
(2) Check the installation state of the battery positive and ground terminals.

NG → Tighten the terminal clamp.

OK

4	Inspection of the engine control computer input voltage

(1) Idle the engine.
(2) Measure the voltage between the engine control computer connector and chassis ground.

Resistance (open circuit check)

Inspection terminals	Inspection conditions	Standard value
A33-1 (+B2) —Chassis ground	Always	10.8V or more
A34-6 (+B) —Chassis ground	Always	10.8V or more

NG → Repair the harness connectors between the engine control computer connector and battery and the main relay.

OK

5	Check poor contact of connectors.

(1) Check the connector between the ECM and alternator and battery for poor connection.

NG → Repair the connector.

OK

6	Inspection of the engine control computer

(1) Connect all connectors.
(2) Clear the memory. (Refer to ES - 28)
(3) Read diagnostic codes. (Refer to ES - 28)

Result

Result	Go to
P0562 is output.	A

A → Replace the alternator. (Refer to BH - 30)

OK

<Note> The circuit returns to normal at this point even if a DTC is detected. Reproduce the faulty condition and perform the diagnosis again. In this case, temporary contact failure of the connector may be present, or the harness may be temporary open or shorted.

DTC	P0563	System Voltage High

Circuit figure

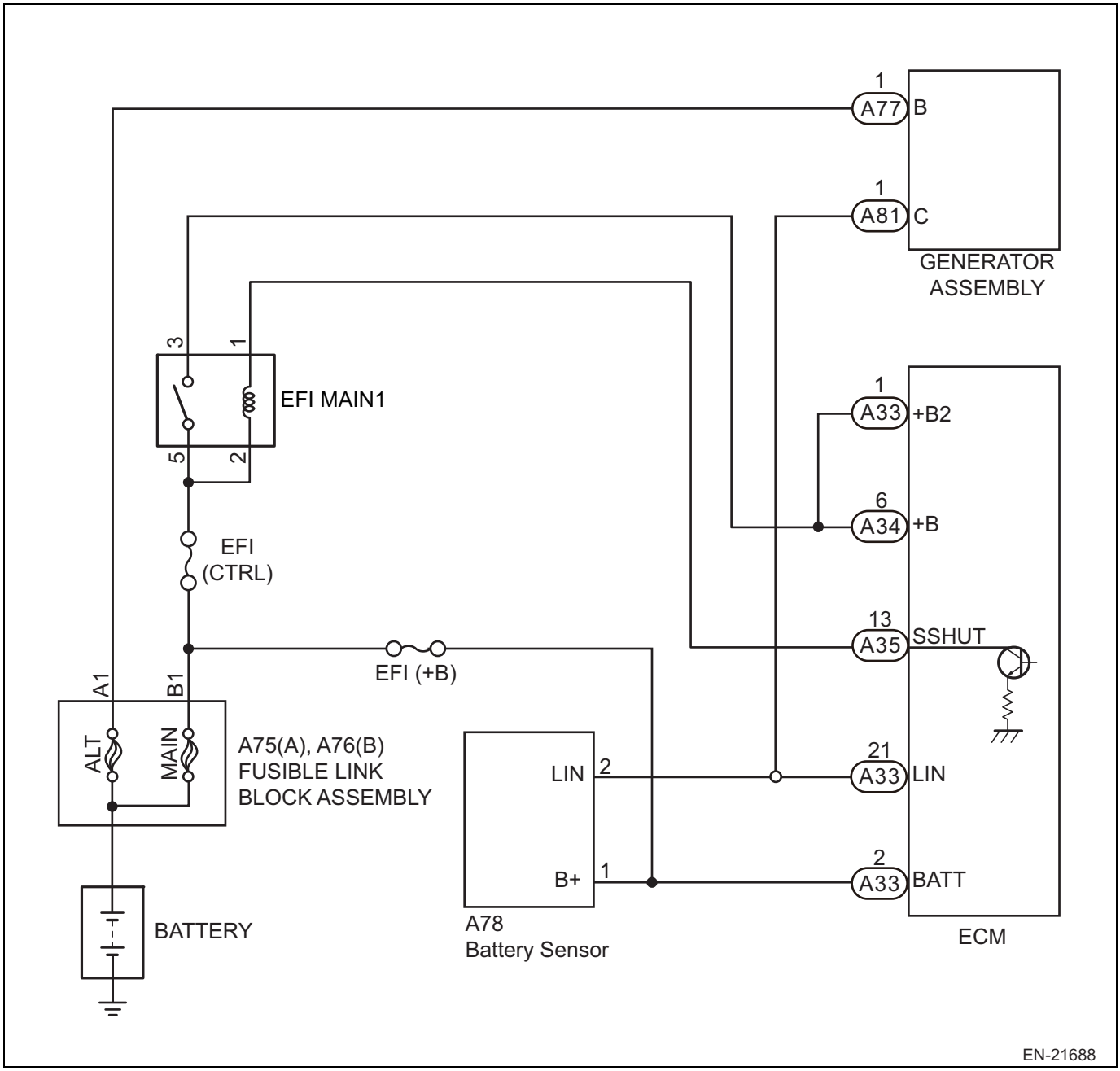

MONITOR STRATEGY

Frequency of Operation	Consecutive
Duration	3 seconds

TYPICAL ENABLING CONDITIONS

Engine speed	1500 RPM or more
Alternator generation control final output duty	50 % or more

TYPICAL MALFUNCTION THRESHOLDS

Battery voltage	16.2V or more

Inspection steps

1	Alternator inspection

(1) Start the engine.
(2) Idle the engine after warm-up.
(3) Measure the voltage between the alternator terminal B and chassis ground.

Resistance (short circuit check)

Inspection terminals	Inspection conditions	Standard value
Alternator terminal B (+) —chassis ground (-)	Always	Less than 16.2 V

NG → Repair the alternator. (Refer to BH - 30)

OK

2	Alternator inspection

(1) Run the engine at 3,000 rpm.
(2) Measure the voltage between the alternator terminal B and chassis ground.

Resistance (short circuit check)

Inspection terminals	Inspection conditions	Standard value
Alternator terminal B (+) —chassis ground (-)	Always	Less than 16.2 V

NG → Repair the alternator. (Refer to BH - 30)

OK

3	Inspection of the engine control computer

(1) Connect all connectors.
(2) Clear the memory. (Refer to ES - 28)
(3) Read diagnostic codes. (Refer to ES - 28)

Result

Result	Go to
P0562 is output.	A

A → Replace the alternator. (Refer to BH - 30)

OK

<Note> The circuit returns to normal at this point even if a DTC is detected. Reproduce the faulty condition and perform the diagnosis again. In this case, temporary contact failure of the connector may be present, or the harness may be temporary open or shorted.

DTC	P065A	Generator/alternator system performance

MONITOR STRATEGY

Frequency of Operation	Consecutive
Duration	0 ms or more (mechanical error warning)
	512 ms or more (alternator speed threshold value)
	0 ms or more (electrical warning: 2 second delay within the alternator)

TYPICAL ENABLING CONDITIONS

DTCs forbidding redundancy	None
LIN communication schedule is being executed	$01

TYPICAL MALFUNCTION THRESHOLDS

Alternator internal failure flag (mechanical error warning)	ON
	and
Alternator speed threshold value	More than 1300 rpm
	or
Alternator internal failure flag (electrical output error warning)	ON

Inspection steps

1	Inspection of the auxiliary equipment belt

(1) Turn the ignition switch to OFF.
(2) Inspect the auxiliary equipment belt. (Refer to EM - 8)

Result

Result	Go to
The auxiliary equipment belt is not broken.	A
The auxiliary equipment belt is broken.	B

NOTE:
- Subaru Select Monitor
  For detailed operation procedures, refer to "Clear memory mode". (Refer to ES - 28)
- General scan tool
  For detailed operation procedures, refer to the operation manual for the general scan tool.

B → Replace the auxiliary equipment belt. (Refer to EM - 5)

OK

Replace the alternator. (Refer to BH - 30)

DTC	P0A3B	Generator/alternator overheating

MONITOR STRATEGY

Frequency of Operation	Consecutive
Duration	1024 ms or more

TYPICAL ENABLING CONDITIONS

DTCs forbidding redundancy	None
LIN communication schedule is being executed	$01

BH

TYPICAL MALFUNCTION THRESHOLDS

Alternator internal failure flag (high temperature error)	ON
Alternator internal temperature monitor value	168°C or more

Inspection steps

1	Alternator inspection

(1) Turn the ignition switch to OFF.
(2) Check the alternator exhaust window for clogged foreign matter.

NG → Remove clogged foreign matter and leave the alternator body for about 20 minutes to cool it down.

OK

2	Inspection of charge warning lamp

(1) Turn the ignition switch to OFF.
(2) Leave the engine for 20 minutes or more.
(3) Start the engine and check the charge warning lamp.

NG → The alternator is temporarily overheated. Check whether the alternator has returned to the normal state and no foreign matter is clogged around the alternator such as alternator exhaust window.

OK

Replace the alternator. (Refer to BH - 30)

DTC	P1C00	Battery monitor module "A" performance

MONITOR STRATEGY

Frequency of Operation	Consecutive
Duration	Less than 1 second
MIL Operation	Immediately

TYPICAL ENABLING CONDITIONS

DTCs forbidding redundancy	None
Ignition switch	ON

TYPICAL MALFUNCTION THRESHOLDS

IBS information internal failure is received.	ON
Or IBS information temperature sensor malfunction is received.	ON
Or IBS information voltage sensor malfunction is received.	ON
Or IBS information current sensor malfunction is received.	ON

Inspection steps

1	Read of the diagnostic code

(1) Connect the SSM4 to the DLC3.
(2) Turn the ignition switch to ON.
(3) Check the diagnostic codes. (Refer to ES - 28)

Result

Result	Go to
P1C00 is output.	A
P1C00 is not output.	B

NOTE:
- Subaru Select Monitor
  For detailed operation procedures, refer to "Clear memory mode". (Refer to ES - 28)
- General scan tool
  For detailed operation procedures, refer to the operation manual for the general scan tool.

B

The circuit returns to normal at this point even if a DTC is detected. Reproduce the faulty condition and perform the diagnosis again. Clear the memory using the Subaru Select Monitor or a general scan tool.

A

Replace the battery sensor. (Refer to PD - 20)

DTC	U0077	LIN communication bus "ECMPCM" off

Circuit figure

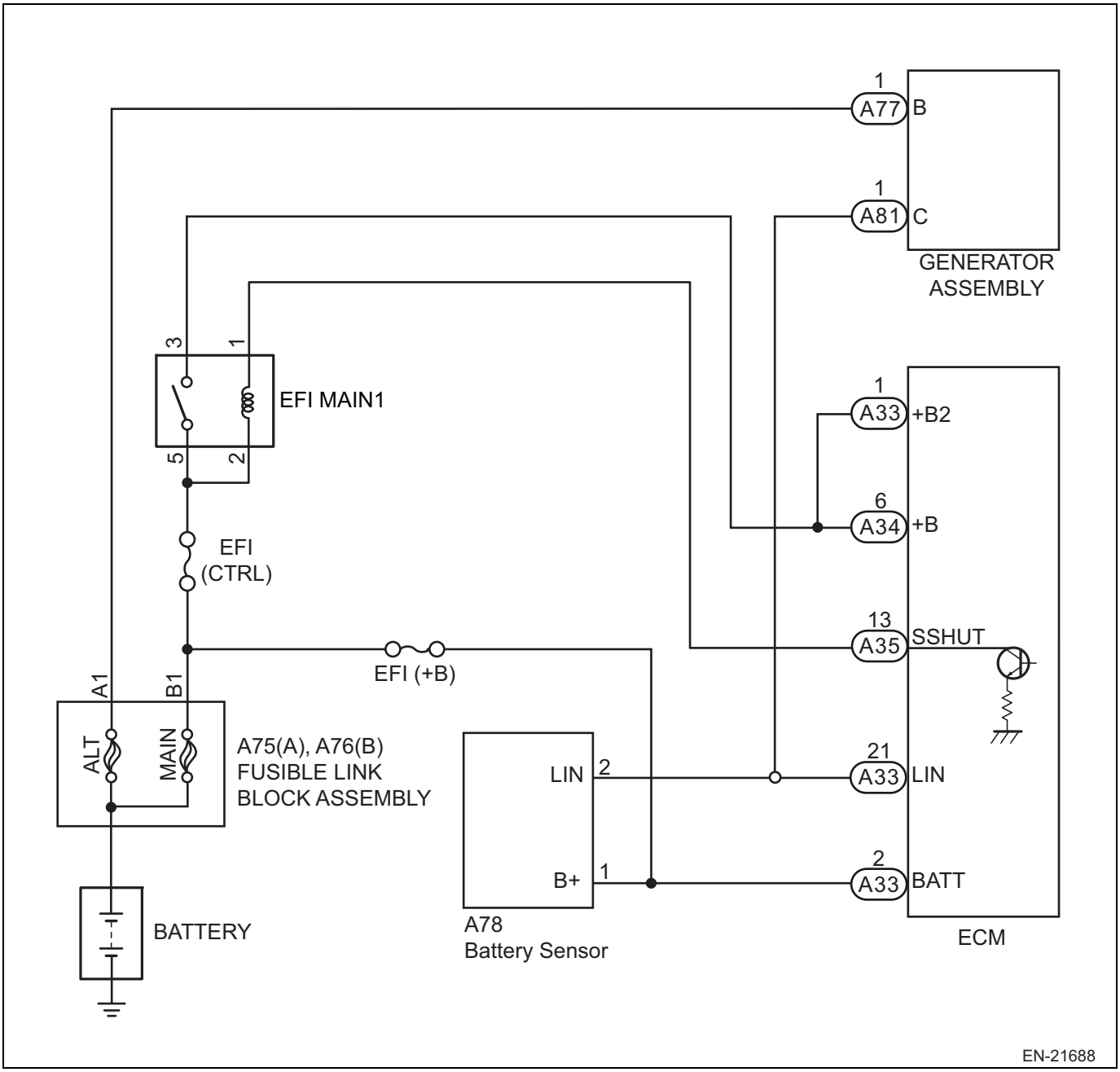

MONITOR STRATEGY

Frequency of Operation	Consecutive
Duration	1.24 seconds
MIL Operation	Immediately

TYPICAL ENABLING CONDITIONS

A bus error state is detected.	Battery voltage is more than 10.9 V.

TYPICAL MALFUNCTION THRESHOLDS

A bus error state in LIN communication with the control unit is detected.	A bus error state is detected.

Inspection steps

1	Read of the diagnostic code

(1) Connect the SSM4 to the DLC3.
(2) Turn the ignition switch to ON.
(3) Check the diagnostic codes. (Refer to ES - 28)

Result

Result	Go to
U0077 is output.	A
U0077 is not output.	B

NOTE:
- Subaru Select Monitor
  For detailed operation procedures, refer to "Clear memory mode". (Refer to ES - 28)
- General scan tool
  For detailed operation procedures, refer to the operation manual for the general scan tool.

B

The circuit returns to normal at this point even if a DTC is detected. Reproduce the faulty condition and perform the diagnosis again. Clear the memory using the Subaru Select Monitor or a general scan tool.

A

2	Checking of wiring harness and connector (engine control computer - Battery sensor)

(1) Turn the ignition switch to OFF.
(2) Disconnect the connector for the engine control computer.
(3) Disconnect the connector for battery sensor.
(4) Measure the resistance between the terminals. (For terminal arrangement, refer to BH - 20.)

Resistance (open circuit check)

Inspection terminals	Inspection conditions	Standard value
A33-21(LIN)—A78-2(LIN)	Always	Less than 1 Ω

NOTE:
- Wiggle the wiring harness and connectors to identify trouble that may not occur constantly for a more accurate check.
- Make sure an excessive tension is not placed on the wiring harness.

NOTE:
In this case, repair the following items.
- Open circuit between the engine control computer connector and battery sensor connector harness
- Poor contact of the intermediate connector

NG

Repair harness and connector.

OK

3	Checking of wiring harness and connector (engine control computer - Battery sensor)

(1) Measure the resistance between the engine control computer connector and chassis ground. (For terminal arrangement, refer to BH - 20.)

Resistance (short circuit check)

Inspection terminals	Inspection conditions	Standard value
A33-21 (LIN) —other terminals and chassis ground	Always	1 MΩ or more

NOTE:
- Wiggle the wiring harness and connectors to identify trouble that may not occur constantly for a more accurate check.
- Make sure an excessive tension is not placed on the wiring harness.

NG → Repair ground short circuit in the harness between the engine control computer connector and battery sensor connector.

OK

4	Checking of wiring harness and connector (engine control computer —battery sensor voltage)

NOTE:
For the inspection procedure and precautions for wiring harnesses and connectors, refer to IN - 36.
(1) Turn the ignition switch to ON.
(2) Measure the voltage between the engine control computer connector and chassis ground.

Inspection terminals	Inspection conditions	Standard value
A33-21 (LIN) —other terminals and chassis ground	Always	Less than 1 V

NOTE:
- Wiggle the wiring harness and connectors to identify trouble that may not occur constantly for a more accurate check.
- Make sure an excessive tension is not placed on the wiring harness.

NG → Repair ground short circuit in the harness between the engine control computer connector and battery sensor connector.

OK

5	Reading diagnostic codes

(1) Turn the ignition switch to OFF.
(2) Connect the connector for engine control computer.
(3) Connect the battery sensor connector.
(4) Clear the memory using the Subaru Select Monitor or a general scan tool.
(5) Check the diagnostic codes. (Refer to BH - 8)

Result

Result	Go to
U0077 is output.	A
U0077 is not output.	B

NOTE:
- Subaru Select Monitor
  For detailed operation procedures, refer to "Clear memory mode". (Refer to ES - 28)
- General scan tool
  For detailed operation procedures, refer to the operation manual for the general scan tool.

B

The circuit returns to normal at this point even if a DTC is detected. Reproduce the faulty condition and perform the diagnosis again. Clear the memory using the Subaru Select Monitor or a general scan tool.

A

Replacement of the engine control computer (Refer to ES - 670)

DTC	U1712	Lost LIN communication with battery "1" monitor module

Circuit figure

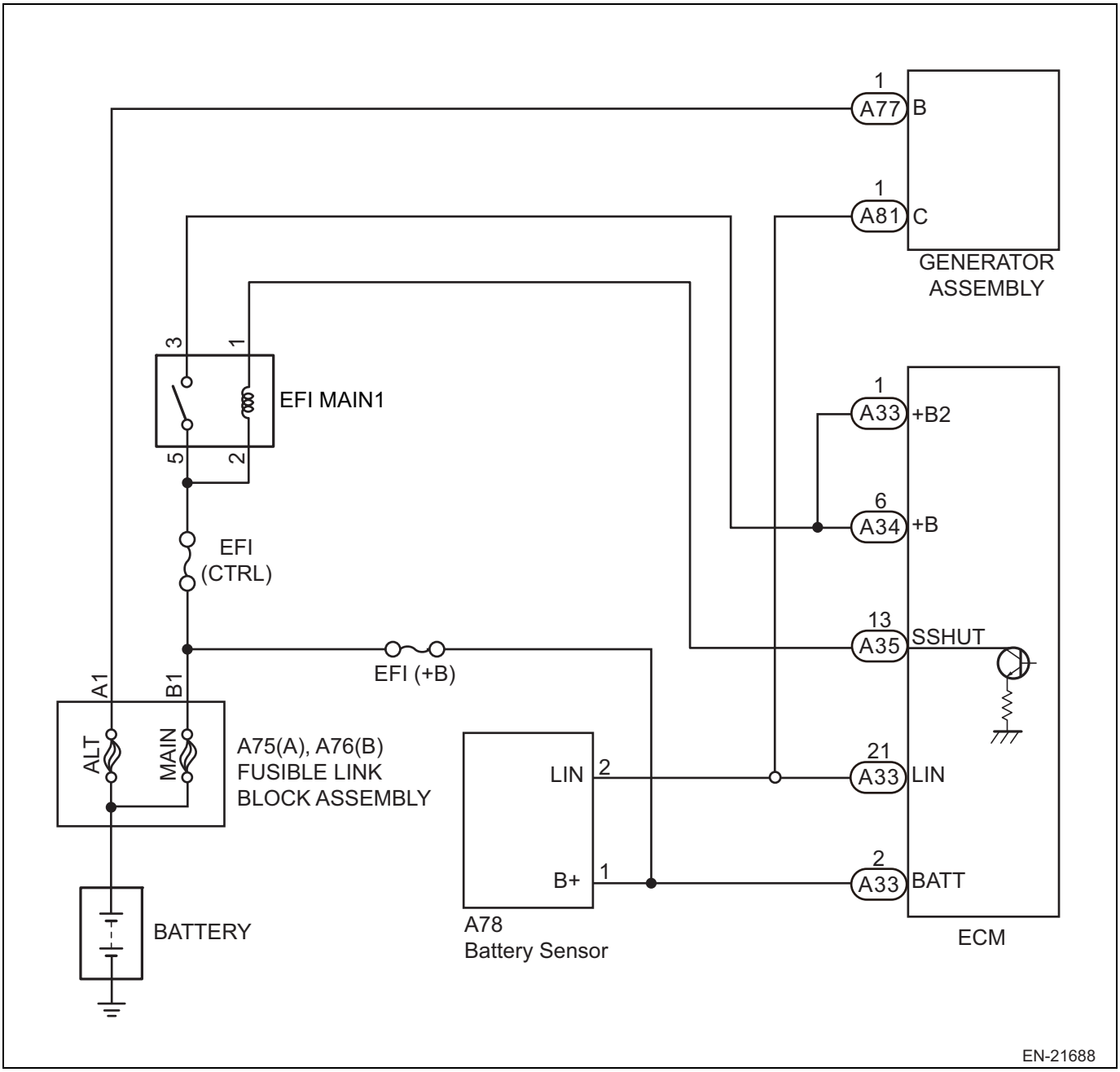

MONITOR STRATEGY

Frequency of Operation	Consecutive
Duration	2 seconds
MIL Operation	Immediately

TYPICAL ENABLING CONDITIONS

Battery voltage	10.9V or more

TYPICAL MALFUNCTION THRESHOLDS

Data received from the control unit connected to LIN	No change or checksum error

Inspection steps

1	Read of the diagnostic code

(1) Connect the SSM4 to the DLC3.
(2) Turn the ignition switch to ON.
(3) Check the diagnostic codes. (Refer to ES - 28)

Result

Result	Go to
U1712 is output.	A
U1712 is not output.	B

NOTE:
- Subaru Select Monitor
  For detailed operation procedures, refer to "Clear memory mode". (Refer to ES - 28)
- General scan tool
  For detailed operation procedures, refer to the operation manual for the general scan tool.

B

The circuit returns to normal at this point even if a DTC is detected. Reproduce the faulty condition and perform the diagnosis again. Clear the memory using the Subaru Select Monitor or a general scan tool.

A

2	Checking of the engine control computer connector

(1) Turn the ignition switch to OFF.
(2) Check the connection of the engine control computer connector.

NG

Properly connect the connector for engine control computer.

OK

3	Checking of the harness between the battery and battery sensor

(1) Turn the ignition switch to OFF.
(2) Disconnect the ground terminal from the battery sensor.
For precautions, refer to PD - 20.
(3) Disconnect the connector from the battery sensor. (Refer to PD - 20)
(4) Disconnect the positive terminal from the battery.
(5) Measure the resistance of the harness between the battery positive cable terminal and battery sensor connector.

Resistance (short circuit check)

Inspection terminals	Inspection conditions	Standard value
Positive cable terminal —A78-2 (LIN)	Always	Less than 1 Ω

NG → Repair open circuit of the harness between the battery positive cable terminal and battery sensor connector.

OK

4	Checking of harness between the engine control computer and battery sensor connector

(1) Disconnect the connectors from the engine control computer.
(2) Measure the resistance of the harness between the engine control computer connector and battery sensor connector.

BH

Inspection terminals	Inspection conditions	Standard value
A78-2(LIN) —A33-21(LIN)	Always	Less than 1 Ω

NOTE:
- Wiggle the wiring harness and connectors to identify trouble that may not occur constantly for a more accurate check.
- Make sure an excessive tension is not placed on the wiring harness.

NOTE:
In this case, repair the following items.
- Open circuit of the harness between the engine control computer connector and battery sensor connector
- Poor contact of the intermediate connector

NG → Repair harness and connector.

OK

Recheck the connector for poor contact and the harness. If no problem is found, replace the battery sensor.

DTC	U171F	Lost LIN communication with generator

Circuit figure

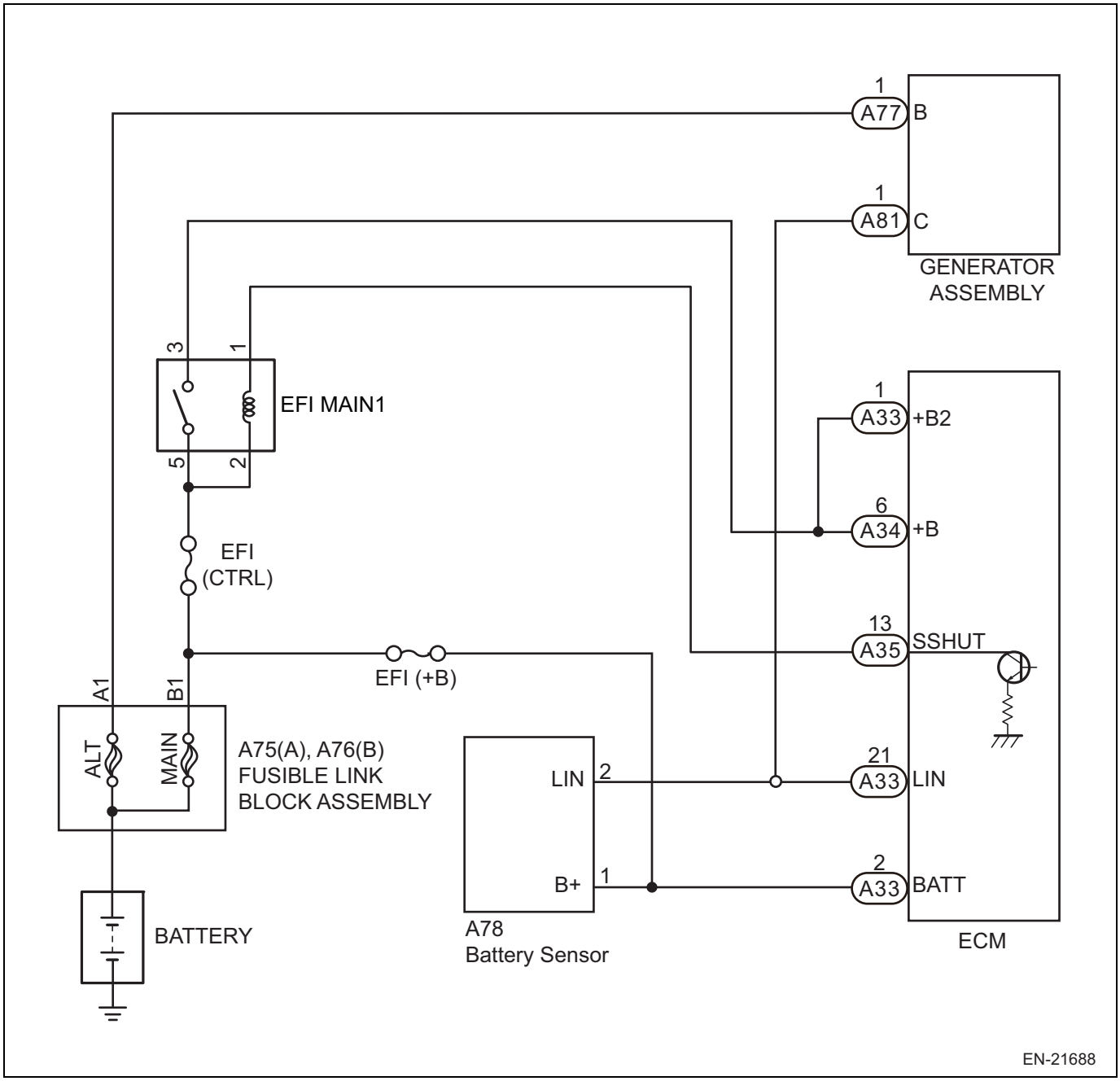

MONITOR STRATEGY

Frequency of Operation	Consecutive
Duration	2 seconds

TYPICAL ENABLING CONDITIONS

Battery voltage	10.9V or more

TYPICAL MALFUNCTION THRESHOLDS

Data received from the control unit connected to LIN	No change or checksum error

	or
Alternator internal failure flag (communication error warning)	ON

Inspection steps

1	Read of the diagnostic code

(1) Connect the SSM4 to the DLC3.
(2) Turn the ignition switch to ON.
(3) Check the diagnostic codes. (Refer to ES - 28)

BH

Result

Result	Go to
U171F is output.	A
U171F is not output.	B

NOTE:
- Subaru Select Monitor
  For detailed operation procedures, refer to "Clear memory mode". (Refer to ES - 28)
- General scan tool
  For detailed operation procedures, refer to the operation manual for the general scan tool.

B → The circuit returns to normal at this point even if a DTC is detected. Reproduce the faulty condition and perform the diagnosis again. Clear the memory using the Subaru Select Monitor or a general scan tool.

A

2	Checking of the engine control computer connector

(1) Turn the ignition switch to OFF.
(2) Check the connection of the engine control computer connector.

NG → Properly connect the connector for engine control computer.

OK

3	Checking of the alternator terminal B voltage.

(1) Turn the ignition switch to OFF.
(2) Disconnect the ground terminal from the battery sensor.
For precautions, refer to ES - 36.
(3) Measure the alternator terminal B voltage.

Resistance (short circuit check)

Inspection terminals	Inspection conditions	Standard value
Alternator terminal B —engine ground	Always	Battery voltage

NG → Check the harness and fuse of the alternator terminal B.

OK

4	Checking of harness between the engine control computer and alternator connector

(1) Disconnect the connectors from the engine control computer.
(2) Disconnect the LIN communication connector from the generator/alternator.
(3) Measure the harness resistance between the engine control computer and alternator LIN communication connector.

Inspection terminals	Inspection conditions	Standard value
A33-21(LIN) —A81-1(C)	Always	Less than 1 Ω

NOTE:
- Wiggle the wiring harness and connectors to identify trouble that may not occur constantly for a more accurate check.
- Make sure an excessive tension is not placed on the wiring harness.

NOTE:
In this case, repair the following items.
- Open circuit of the harness between the ECM connector and alternator.
- Poor contact of the intermediate connector

NG → Repair harness and connector.

OK

Recheck the connector for poor contact and the harness. If no problem is found, replace the alternator. (Refer to BH - 30)

Alternator (FA20)

Exploded view

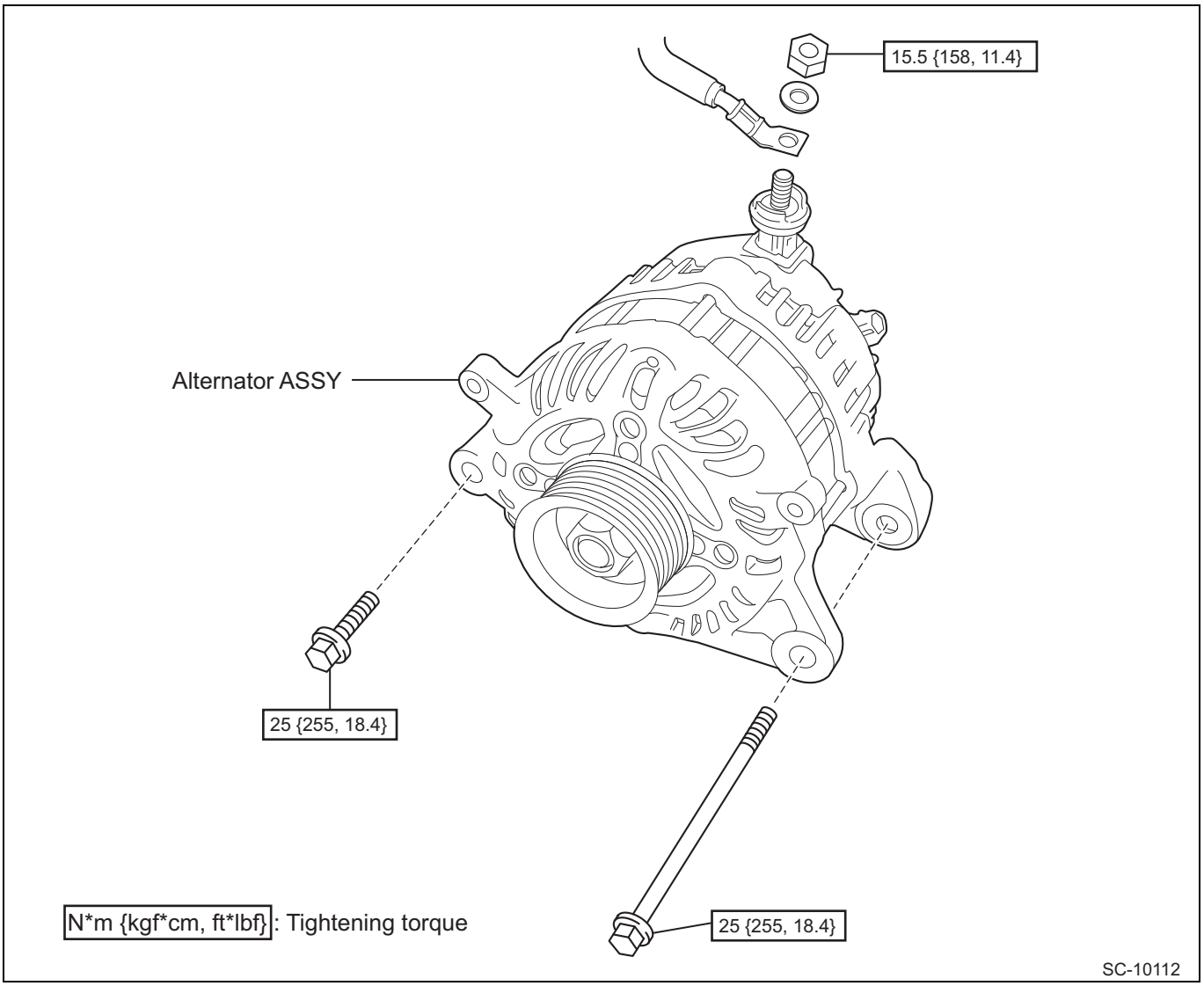

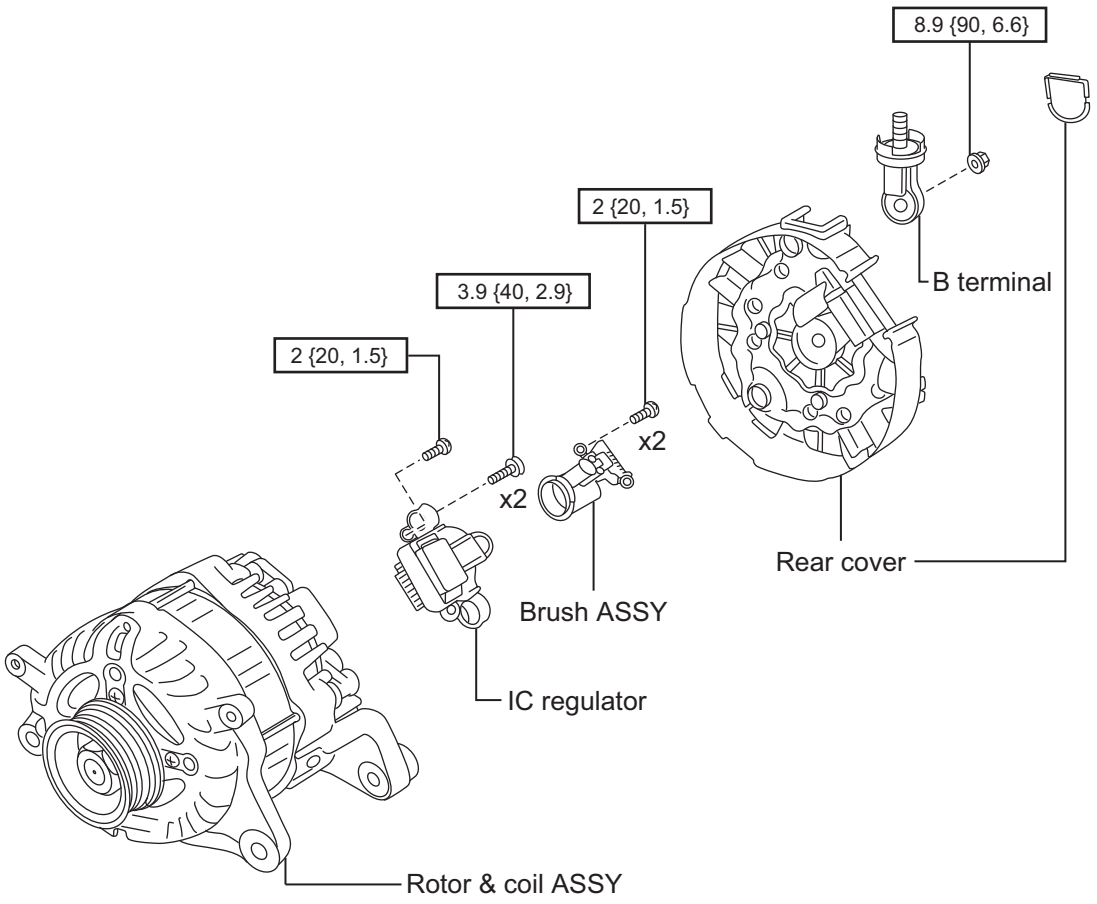

BH

Removal

1. Disconnection of the battery ground terminal
   CAUTION:
   The power windows are equipped with an index function that is linked to the opening and closing of the doors and allows the glass to be opened and closed a little. The molding may be damaged when the doors are opened or closed after disconnecting the battery ground terminal with the glass fully closed. Therefore, always disconnect the battery ground terminal with the driver's or passenger's door open (with the glass lowered to a position that allows free door opening and closing).
2. Removal of V-belt (Refer to EM - 5)

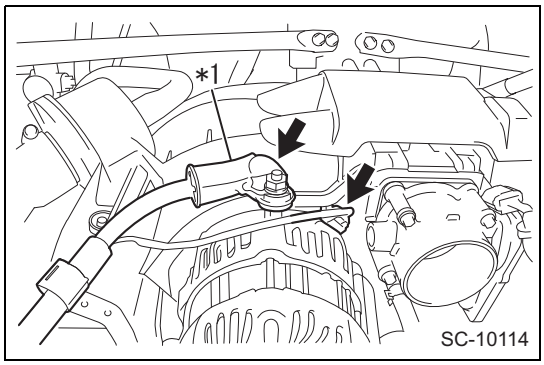

3. Removal of the alternator ASSY
   (1) Turn over the terminal cap.
   (2) Undo the nut and disconnect the wiring harness from the B terminal.
   (3) Disconnect the connector.

Captions in illustration

*1	Terminal cap

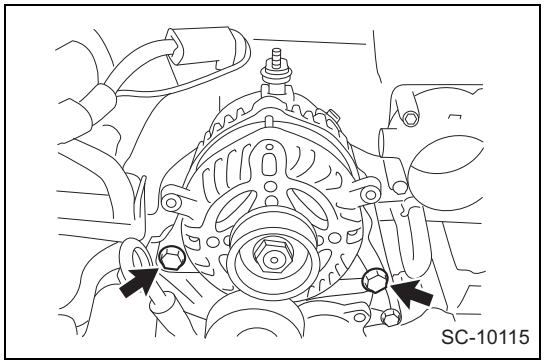
SC-10115

(4) Undo the two bolts and remove the alternator ASSY.

BH

Disassembly

1. Removal of IC regulator

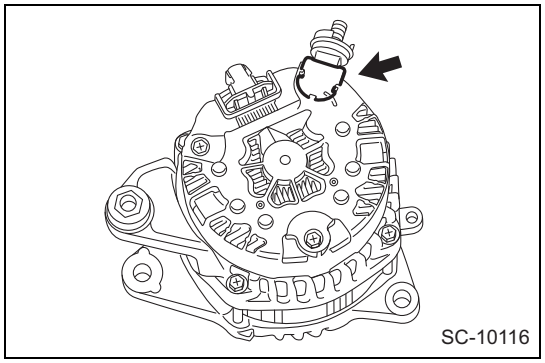
SC-10116

(1) Remove the cover.

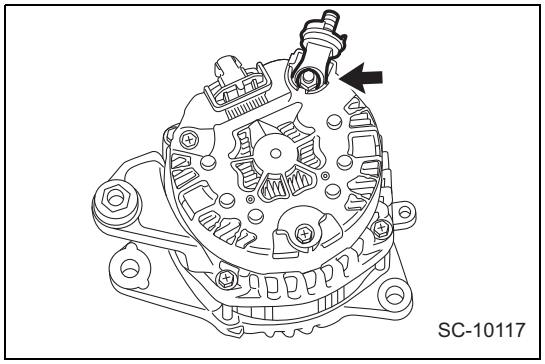
SC-10117

(2) Remove the nut and remove the terminal B.

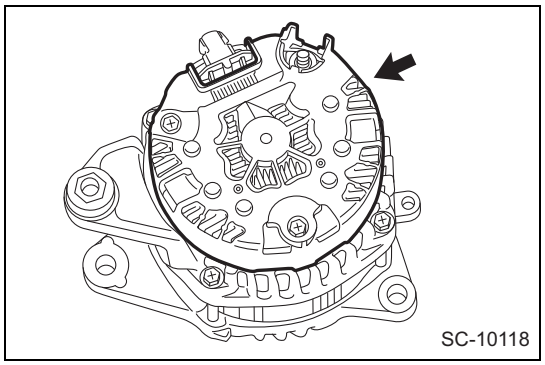
SC-10118

(3) Remove the rear cover.

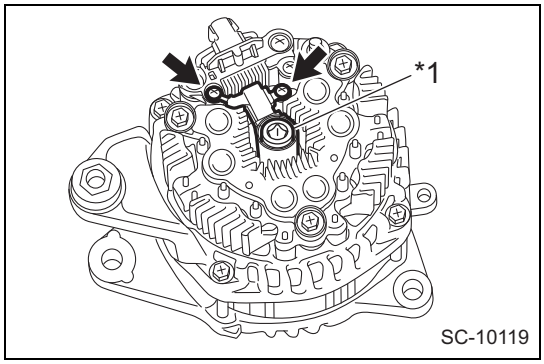

(4) Remove the 2 bolts, and remove the brush ASSY.

Captions in illustration

*1	Socket wrench

NOTE:
To avid the damage to the slip ring, place an appropriate tool such as a socket wrench of the correct size between the brush and slip ring.

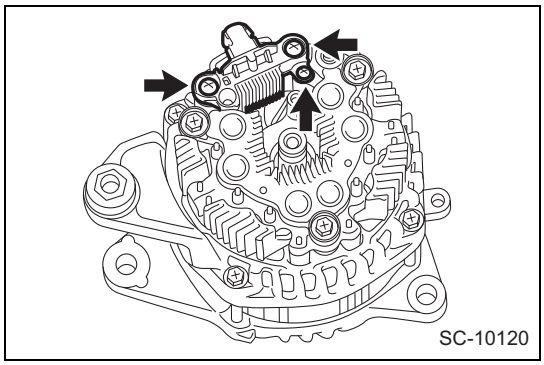

(5) Remove the 3 bolts, and remove the IC regulator.

BH

Inspection

1. Inspection of light-emitting diode
   (1) Check the continuity between the light-emitting diode lead and terminal E or terminal B. Replace the rectifier if the continuity is not as shown in the table.

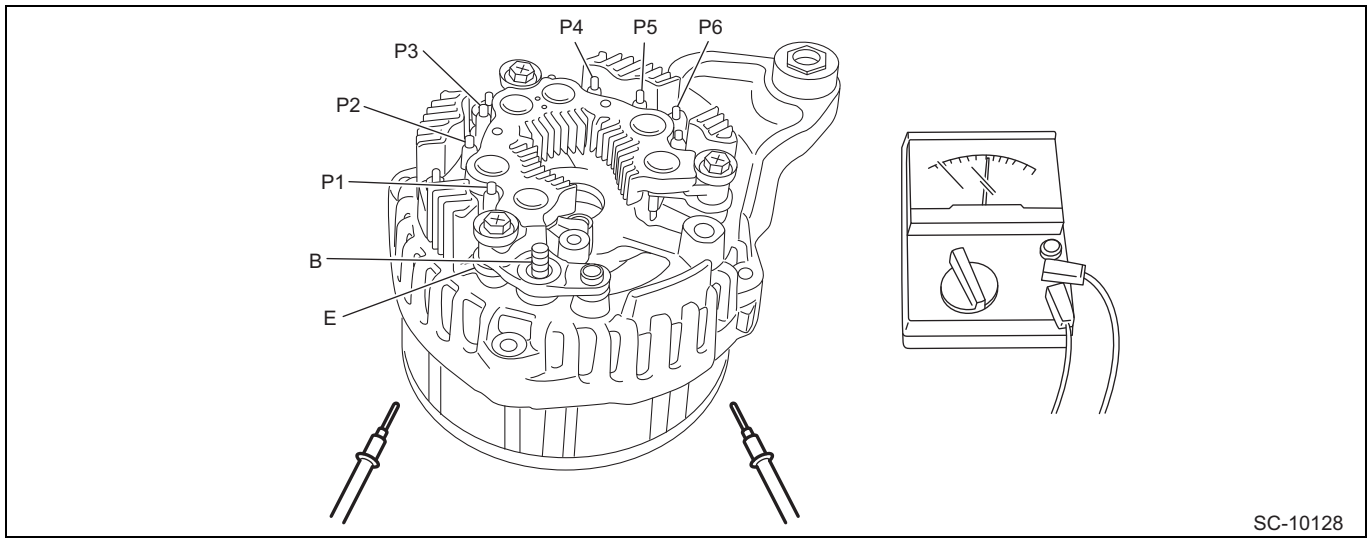

Analog tester

Tester lead		Conductor
- Lead	+ Lead	
E	P1, P2, P3, P4, P5, P6	ON
B		None
P1, P2, P3, P4, P5, P6	E	None
	B	ON

Digital tester

Tester lead		Conductor
- Lead	+ Lead	
E	P1, P2, P3, P4, P5, P6	None
B		ON
P1, P2, P3, P4, P5, P6	E	ON
	B	None

CAUTION:
Megger testers (used for measuring high voltage) or other equivalent measuring instruments may damage the light-emitting diode. Do not use such instruments for this test.

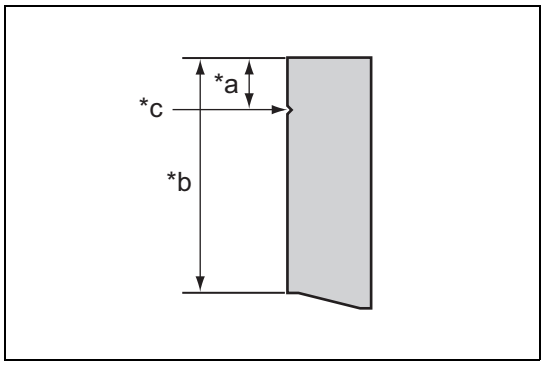

2. Brush check
   (1) Using a vernier caliper, measure the brush length.
   Standard length: 22.5 mm {0.885 in}
   Minimum length: 5.0 mm {0.196 in}

Text in Illustration

*a	Minimum length
*b	Standard length
*c	Mark of minimum length
	Brush

If the brush length is less than the minimum, replace the brush.

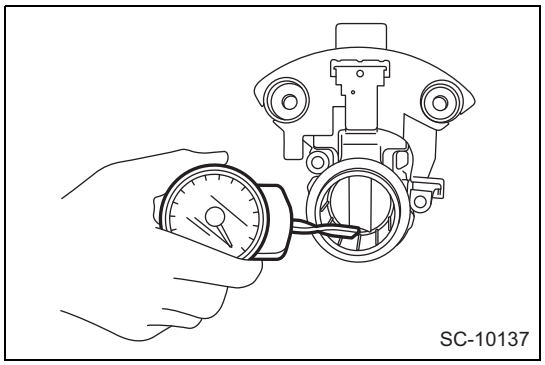

(2) Check the brush spring for appropriate pressure. Insert the brush to the brush holder until its tip comes out from the brush holder by 2 mm (0.0787 in.). Then, use the spring pressure indicator to measure the brush spring pressure. Replace the brush spring if the pressure is 1.7 N (173 gf, 6.11 ozf) or less. The pressure of a new spring must be 4.1 - 5.3 N (418 - 540 gf, 14.75 - 19.06 ozf).

Assembly

1. Installation of IC regulator

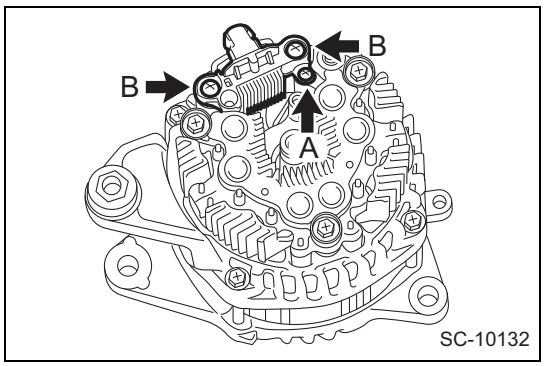

(1) Install the IC regulator in place with the 3 bolts.
Standard value:Bolt A
T=2.0N·m {20kgf·cm}
Bolt B
T=3.9N·m {40kgf·cm}

(2) Install the brush ASSY in place with the 2 bolts.
Standard value:T=2.0N·m {20kgf·cm}
CAUTION:
Push the brush into the brush holder while holding the brush with fingers or a socket wrench of the correct size to install the brush ASSY in place.

(3) Install the rear cover.

(4) Install the terminal B with the nut.
Standard value:T=8.9N·m {90kgf·cm}
(5) Install the cover.

Installation

1. Installation of the alternator ASSY
   (1) Install the alternator ASSY in place with the two bolts.
   Standard value:T=25N·m {255kgf·cm} {18.4ft·lbf}
   (2) Connect the connector.
   (3) Connect the wiring harness to the B terminal with a nut.
   Standard value:T=15.5N·m {158kgf·cm} {11.4ft·lbf}
   (4) Install the terminal cap.
2. Installation of V-belt
   (Refer to EM - 7)
3. Connection of the battery ground terminal
   Standard value:T=6.0N·m {61kgf·cm} {4.4 ft·lbf}

BH

Power supply & wire harness

Power control system

Parts location PD-2
List of diagnostic codes PD-3
How to troubleshoot PD-3
Checking / clearing diagnostic codes PD-4
Circuit figure PD-5
ECM terminal arrangement PD-6
Data monitor / active test PD-7
B1010 . . . . . PD-7
B1011 . . . . . PD-8
B1012 . . . . . PD-11
B1013 . . . . . PD-14
B1014 . . . . . PD-17

Battery sensor

Exploded view PD-20
Removal PD-20
Installation PD-21
Unit inspection PD-21

Main body ECM

Exploded view PD-22
Work support PD-23
Customize function PD-23
Removal PD-25
Installation PD-27

Power control system

Parts location

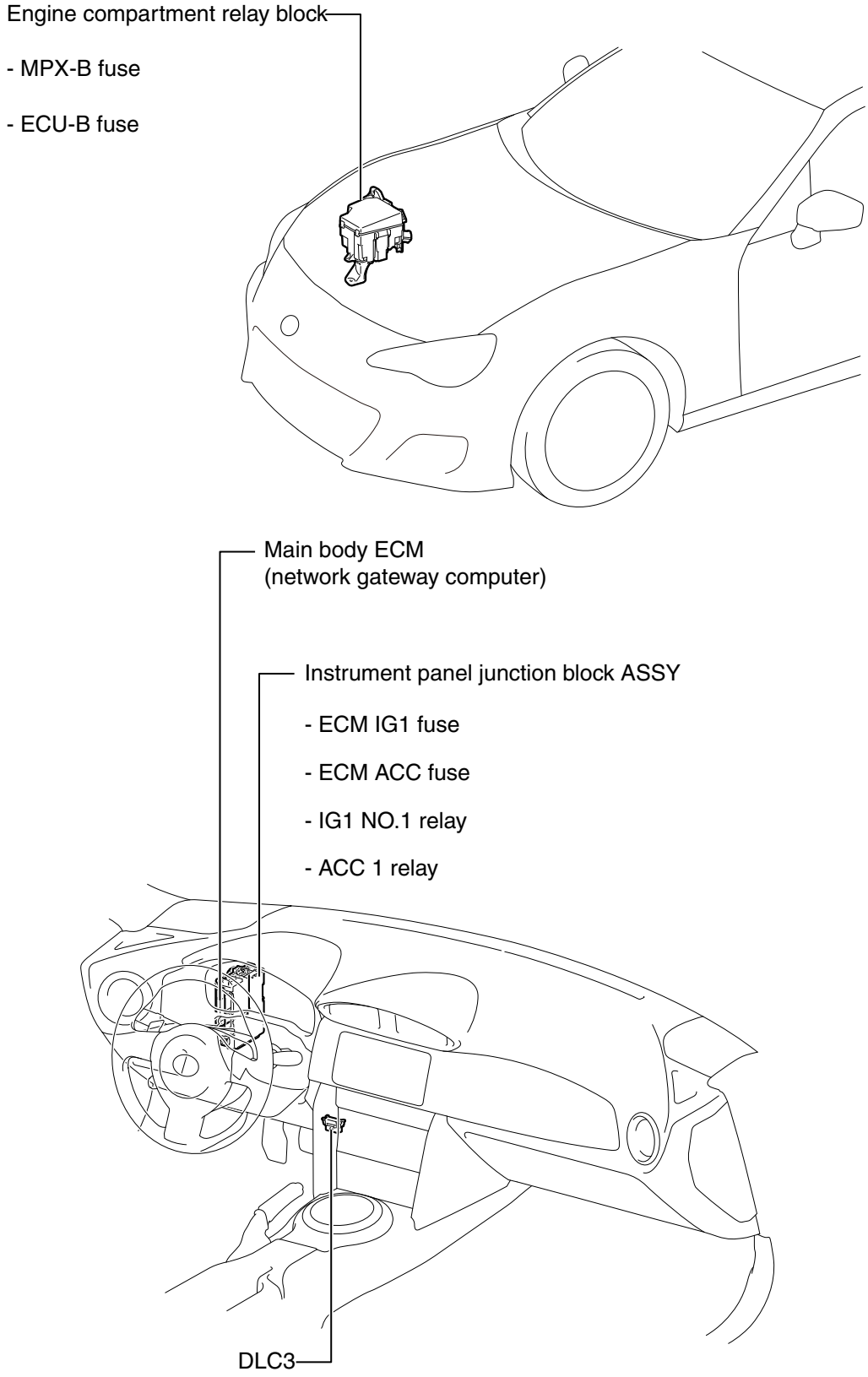

List of diagnostic codes

Diagnostic codes	Diagnostic items	Reference pages
B1010	[Integ. unit system error]	PD - 7
B1011	[BATT p/supply malfunction cont.]	PD - 8
B1012	[BATT p/supply malfunction backup]	PD - 11
B1013	[Ignition power failure]	PD - 14
B1014	[ACC power failure]	PD - 17

How to troubleshoot

1	Bring in the car

Next

2	Phenomenon check

Next

3	Checking the diagnostic codes (Refer to PD - 4)

(1) DTC check
(2) Clearing diagnostic code
(3) Rechecking the diagnostic codes

Result

Result	Go to
Code output present	A
No code output	B

B → Go to Step 5

A

4	List of diagnostic codes (main inspection parts) or troubleshooting for each code

Result

Result	Go to
Fault location confirmed	A
Fault location not confirmed	B

A → Go to Step 7

B → Go to Step 6

5	Inspection with SSM4 (Refer to PD - 7)

(1) Perform the ECM data monitor and the active test.

Result

Result	Go to
Fault location not confirmed	A

Result	Go to
Fault location confirmed	B

B → Go to Step 7

A

6	Inspection of the ECM terminal voltage and circuit (Refer to PD - 6)

Next

PD

7	Repair faulty parts

Next

8	Checking the diagnostic codes (Refer to PD - 4)

Next

Completed

Checking / clearing diagnostic codes

1. Checking diagnostic codes (reading with SSM4)
   (1) Turn the ignition switch to OFF.
   (2) Connect the SSM4 to the DLC3.
   (3) Turn the ignition to IG ON and use the SSM4 display to select [Each System] →[Body Control] →[DTC] to bring up the DTC check screen.
   (4) Check the diagnostic codes.
2. Clearing diagnostic code records (Cleared by the SSM4)
   (1) Turn the ignition switch to OFF.
   (2) Connect the SSM4 to the DLC3.
   (3) Turn the ignition to IG ON and use the SSM4 display to select [Each System] →[Body Control] →[Clear Memory].
   (4) Select [Deletion] to delete the diagnostic codes.
   CAUTION:
   - If deletion is not possible, retry it after turning the ignition to IG OFF and then on again.
   - Do not use the SSM4 to delete diagnostic codes until the cause of the trouble has been identified.

Circuit figure

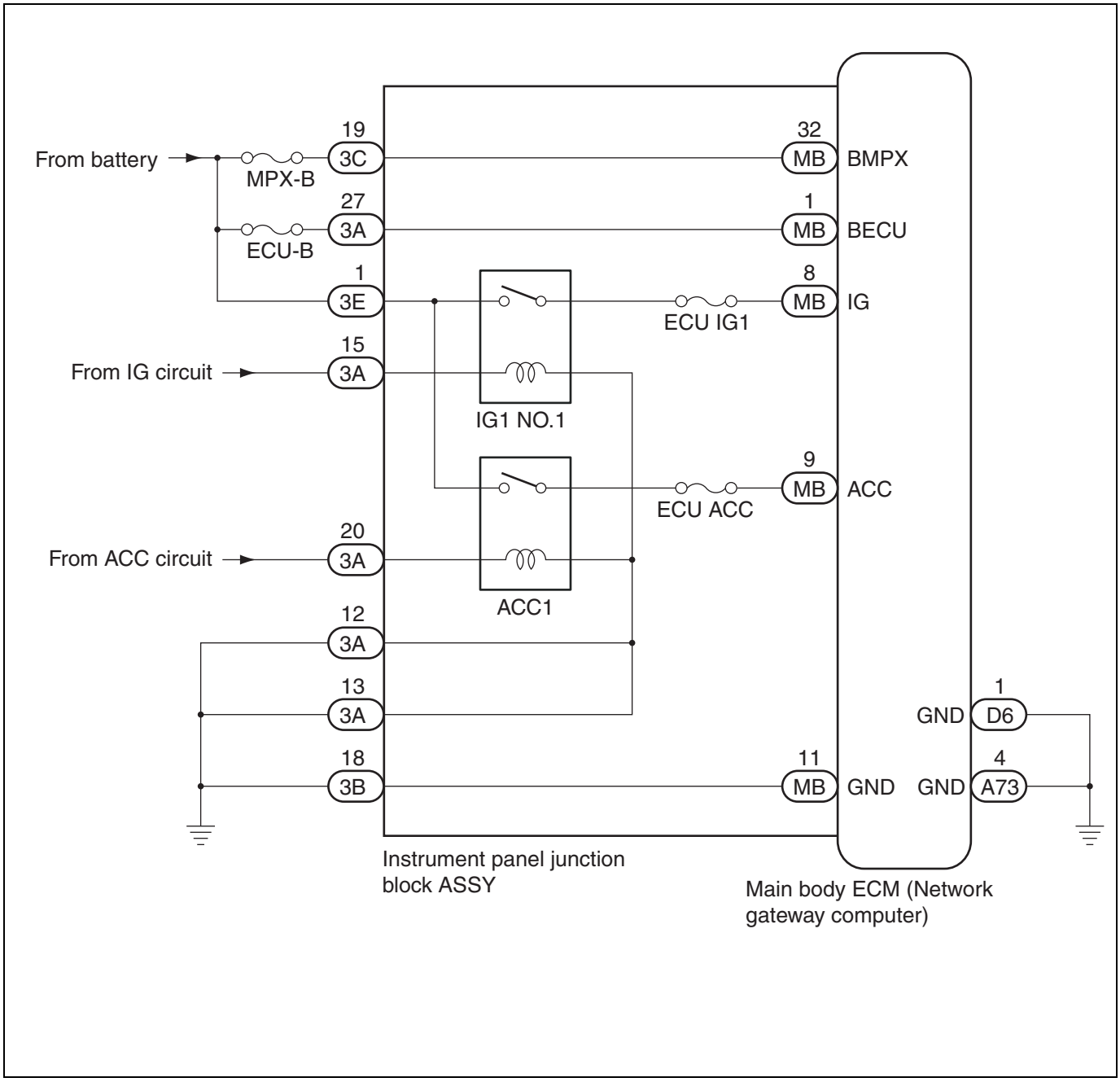

PD

ECM terminal arrangement

1. Instrument panel junction block ASSY, main body ECM (Network gateway computer).

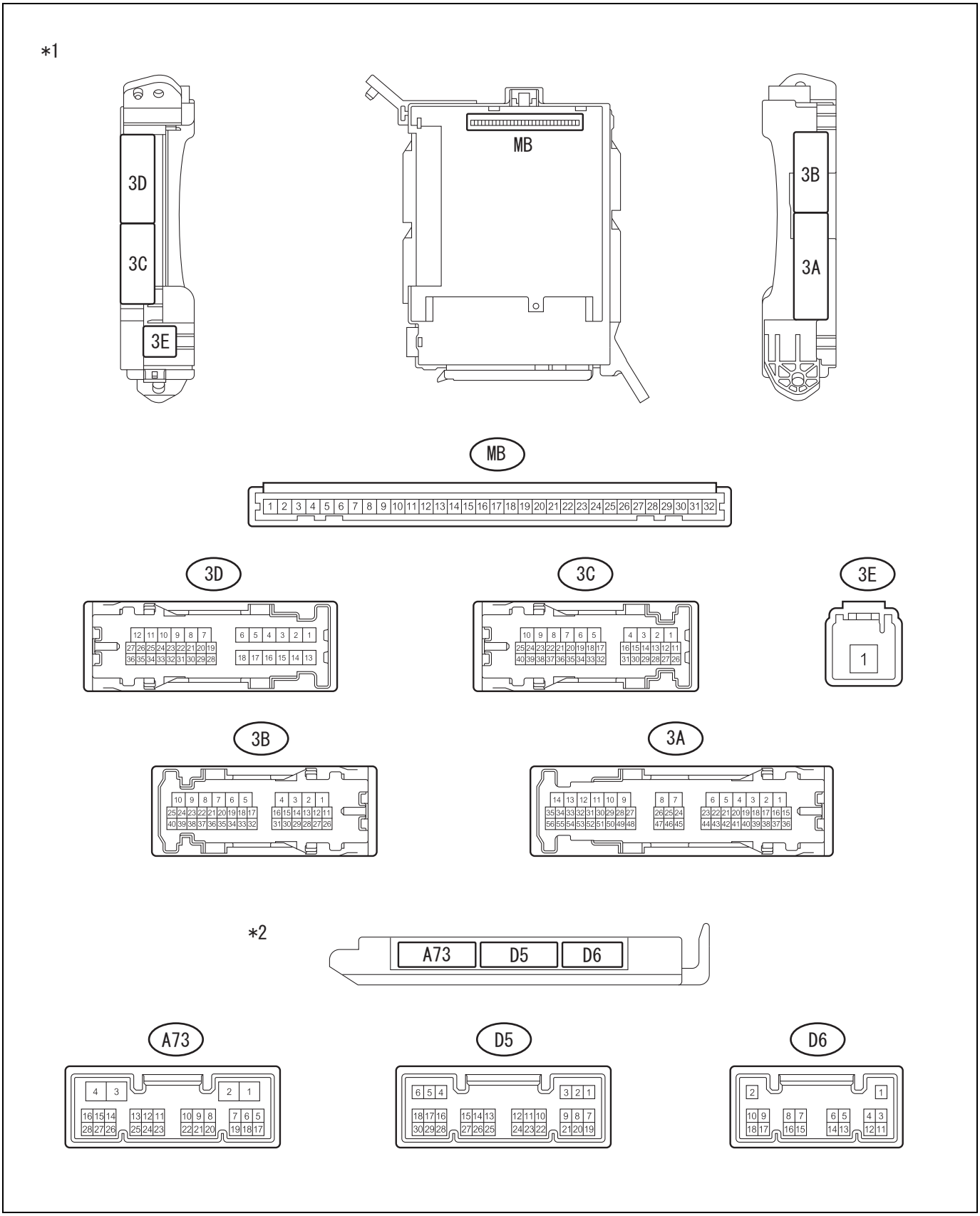

Captions in illustration

*1	Instrument panel junction block ASSY	*2	Main body ECM (Network gateway computer)

(1) Measure the voltage and resistance between terminals.

NOTE:
This inspection is performed from the back side of the connector with the connector in a connected state.

Terminal No. (Terminal code)	Input/Output	Item	Measuring condition	Criteria
3A-15 ←→chassis ground	Input	Voltage	IG ON	11 to 14V
3A-20 ←→chassis ground	Input	Voltage	IG ON	11 to 14V
3A-27 ←→chassis ground	Input	Voltage	Always	11 to 14V
3C-19 ←→chassis ground	Input	Voltage	Always	11 to 14V
3E-1 ←→chassis ground	Input	Voltage	Always	11 to 14V
3A-12 ←→chassis ground	-	Resistance	Always	Less than 1 Ω
3A-13 ←→chassis ground	-	Resistance	Always	Less than 1 Ω
3B-18 ←→chassis ground	-	Resistance	Always	Less than 1 Ω
D6-1 (GND) ←→chassis ground	-	Resistance	Always	Less than 1 Ω
A73-4 (GND) ←→chassis ground	-	Resistance	Always	Less than 1 Ω

(2) Remove the main body ECM (network gateway computer) from the instrument panel junction block ASSY.
(3) Measure the voltage and resistance between terminals.

Terminal No. (Terminal code)	Input/Output	Item	Measuring condition	Criteria
MB-1 (BECU) ←→chassis ground	Input	Voltage	Always	11 to 14V
MB-8 (IG) ←→chassis ground	Input	Voltage	IG ON	11 to 14V
MB-9 (ACC) ←→chassis ground	Input	Voltage	ACC ON	11 to 14V
MB-32 (BMPX) ←→chassis ground	Input	Voltage	Always	11 to 14V
MB-11 (GND) ←→chassis ground	-	Resistance	Always	Less than 1 Ω

Data monitor / active test

1. Data monitor list
(1) Turn the ignition switch to OFF.
(2) Connect the SSM4 to the DLC3.
(3) Turn the ignition switch to ON.
(4) Follow the SSM4 display and select [Each System] →[Body Control] →[Data monitor] to bring up the data monitor item list.
(5) Use the data monitor to judge whether a component is working or not, and to narrow down the location of trouble.

SSM4 screen: [Each System] →[Body Control] →[Data monitor]

Item name	Description/display range	Normal value	Remarks (Main inspection items during a malfunction)
[BATT voltage (control)]	• Shows the BATT (control) voltage. • Display range: 0 to 21.4 V	11 to 14 V	When a malfunction occurs, it may be due to a problem with battery voltage.
[BATT voltage (BACKUP)]	• Shows the BATT voltage backup. • Display range: 0 to 21.4 V	11 to 14 V	When a malfunction occurs, it may be due to a problem with battery voltage.
[Ignition Power Supply Voltage]	• Shows the IG power supply voltage. • Display range: 0 to 21.4 V	11 to 14 V	When a malfunction occurs, it may be due to a problem with the IG circuit.
[ACC voltage]	• Shows the ACC voltage. • Display range: 0 to 21.4 V	11 to 14 V	When a malfunction occurs, it may be due to a problem with the ACC circuit.

DTC	B1010	Integrated unit system error

Circuit description
B1010 is output if there is a malfunction inside the main body ECM (Network gateway computer).

Diagnostic codes	Detecting conditions	Faulty part
B1010	Main body ECM (Network gateway computer) internal malfunction.	• Main body ECM (Network gateway computer)

Inspection steps

1	Clearing diagnostic code

(1) Clear the diagnostic code using the SSM4. (Refer to PD - 4)

Next

2	DTC check

(1) Use the SSM4 to confirm that diagnostic code B1010 is not being output again. (Refer to PD - 4)

Result

Result	Go to
If the diagnostic code is being output again	A
If the diagnostic code is not output	B

B → Go to "How to simulate trouble phenomenon" (Refer to IN - 32)

A

Replacement of the main body ECM (network gateway computer) (Refer to PD - 25)

DTC B1011 BATT power supply (control) malfunction

Circuit description

B1011 is output when a BMPX circuit malfunction is detected.

NOTE:

If B1012 is output at the same time, there are some cases where all functions of the main body ECM (Network gateway computer) do not operate.

Diagnostic codes	Detecting conditions	Faulty part
B1011	The BMPX voltage is 8.3 V or less, or 16.7 V or more (BMPX circuit malfunction)	• Main body ECM (Network gateway computer) • Instrument panel junction block ASSY • Wiring harness or connector

Circuit figure

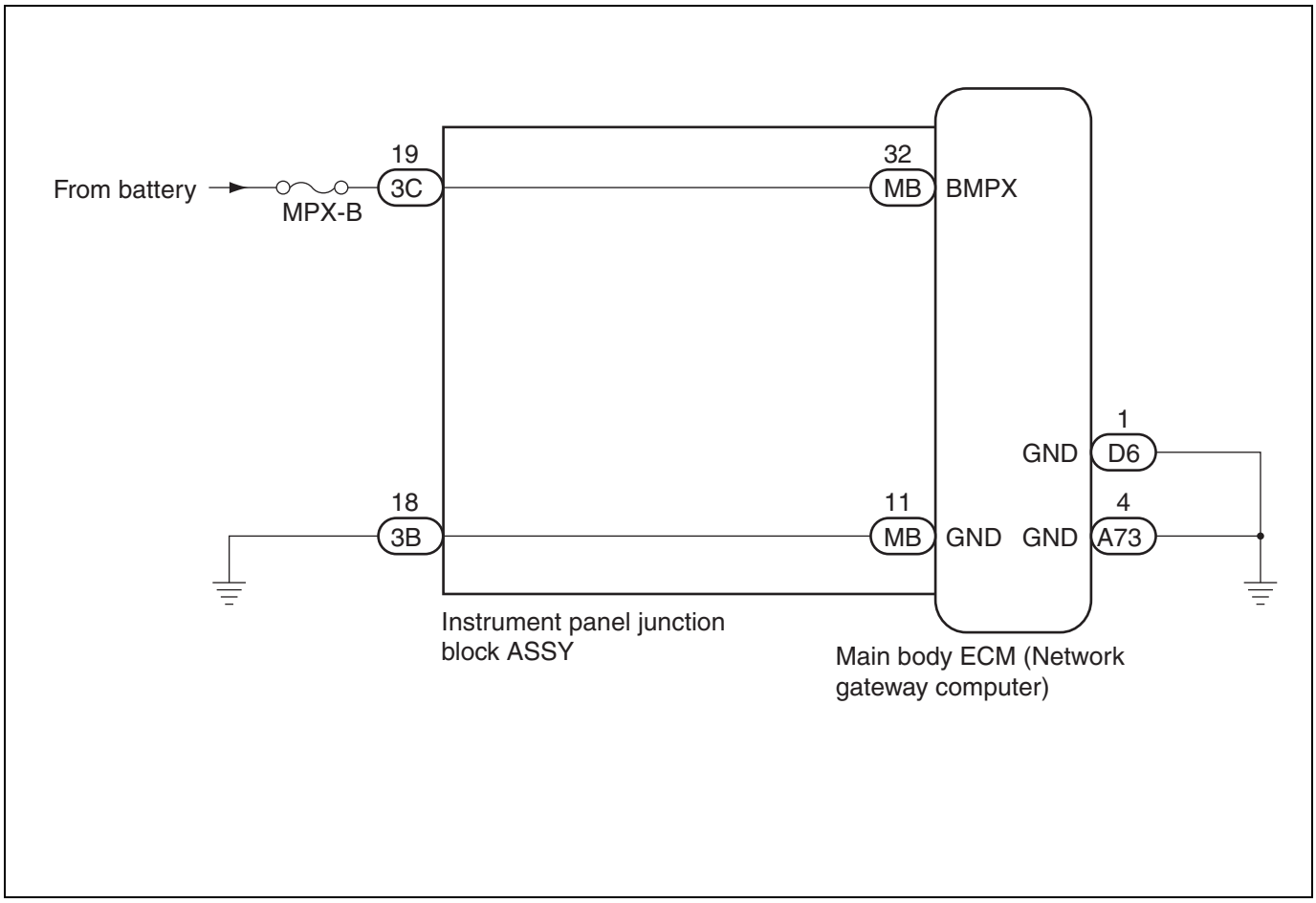

PD

Inspection steps

CAUTION:

Before performing troubleshooting, check the fuse for this circuit.

1	Clearing diagnostic code

(1) Clear the diagnostic code using the SSM4. (Refer to PD - 4)

Next

2	DTC check

(1) Use the SSM4 to confirm that diagnostic code B1011 is not being output again. (Refer to PD - 4)

Result

Result	Go to
If the diagnostic code is being output again	A
If the diagnostic code is not output	B

B → Go to "How to simulate trouble phenomenon" (Refer to IN - 32)

A

3	Inspection of the wiring harness and connector (BMPX voltage)

NOTE:
For inspection procedures and precautions, refer to IN - 36.
(1) Disconnect the instrument panel junction block ASSY connector 3C.

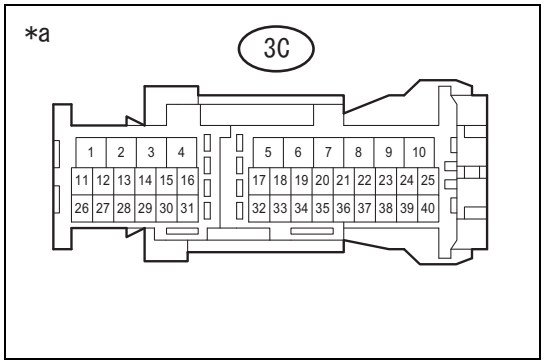

(2) Measure the voltage between the terminals.
Voltage

Inspection terminals	Inspection conditions	Standard value
3C-19 - Chassis ground	Always	11 to 14 V

Captions in illustration

*a	Front side of vehicle wiring harness connector (Instrument panel junction block ASSY connector)

NG → Repair or replacement of wiring harness or connector

OK

4	Inspection of the wiring harness and connector (ECM ground)

NOTE:
For inspection procedures and precautions, refer to IN - 36.
(1) Disconnect the main body ECM (Network gateway computer) connectors D6 and A73.
(2) Disconnect the instrument panel junction block ASSY connector 3B.
(3) Measure the resistance between the terminals.
Resistance

Inspection terminals	Inspection conditions	Standard value
D6-1 (GND) - Chassis ground	Always	Less than 1 Ω
A73-4 (GND) - Chassis ground	Always	Less than 1 Ω
3B-18 - Chassis ground	Always	Less than 1 Ω

NG → Repair or replacement of wiring harness or connector

OK

5	Inspection of the instrument panel junction block ASSY itself

(1) Remove the instrument panel junction block ASSY. (Refer to PD - 25)
(2) Remove the main body ECM (network gateway computer) from the instrument panel junction block ASSY.

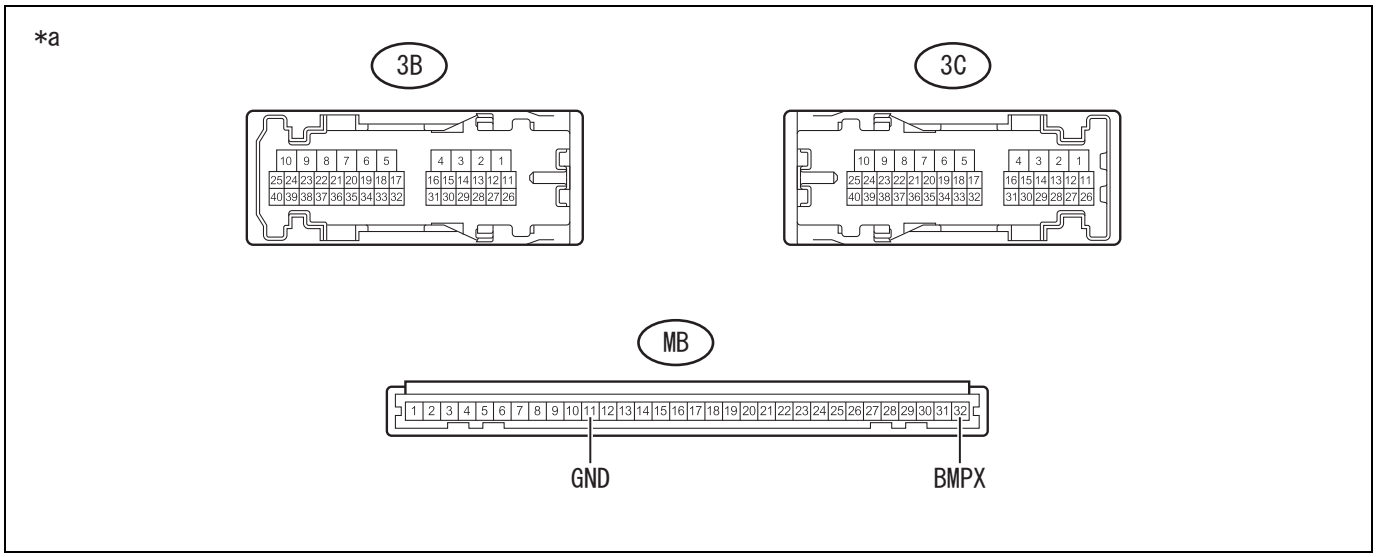

Captions in illustration

*a	Connector not connected (Instrument panel junction block ASSY)	-	-

(3) Measure the resistance between the terminals.

Resistance

Inspection terminals	Inspection conditions	Standard value
3C-19 - MB-32 (BMPX)	Always	Less than 1 Ω
3B-18 - MB-11 (GND)	Always	Less than 1 Ω

NG → Replacement of the instrument panel junction block ASSY (Refer to PD - 25)

OK

Replacement of the main body ECM (network gateway computer) (Refer to PD - 25)

DTC B1012 BATT power supply (backup) malfunction

Circuit description

B1012 is output when a BECU circuit malfunction is detected.

NOTE:

If B1011 is output at the same time, there are some cases where all functions of the main body ECM (Network gateway computer) do not operate.

Diagnostic codes	Detecting conditions	Faulty part
B1012	The BECU voltage is 8.3 V or less, or 16.7 V or more (BECU circuit malfunction)	• Main body ECM (Network gateway computer) • Instrument panel junction block ASSY • Wiring harness or connector

Circuit figure

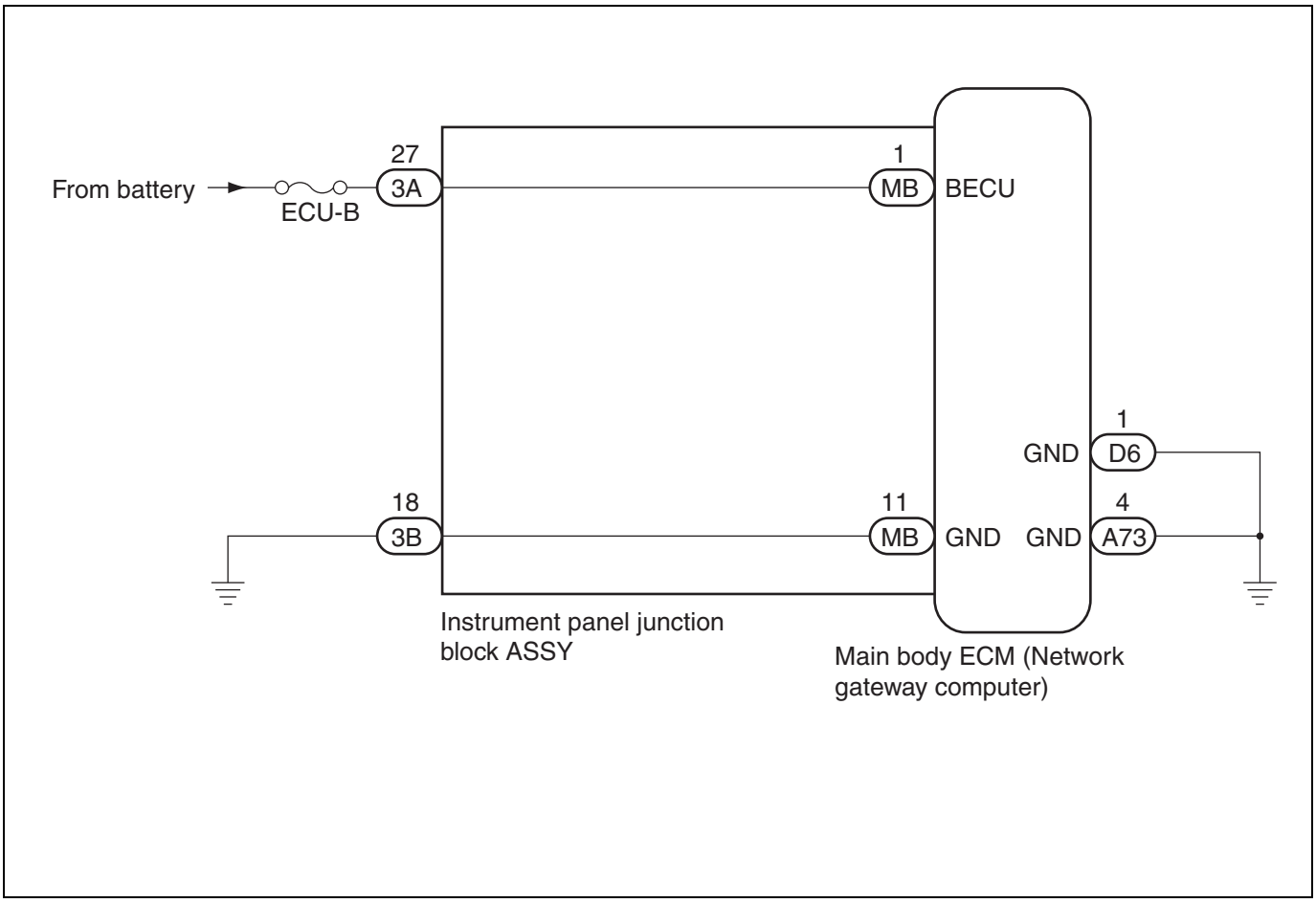

PD

Inspection steps

CAUTION:

Before performing troubleshooting, check the fuse for this circuit.

1	Clearing diagnostic code

(1) Clear the diagnostic code using the SSM4. (Refer to PD - 4)

Next

2	DTC check

(1) Use the SSM4 to confirm that diagnostic code B1012 is not being output again. (Refer to PD - 4)

Result

Result	Go to
If the diagnostic code is being output again	A
If the diagnostic code is not output	B

B → Go to "How to simulate trouble phenomenon" (Refer to IN - 32)

A

3	Inspection of the wiring harness and connector (BECU voltage)

NOTE:
For inspection procedures and precautions, refer to IN - 36.

(1) Disconnect the instrument panel junction block ASSY connector 3A.

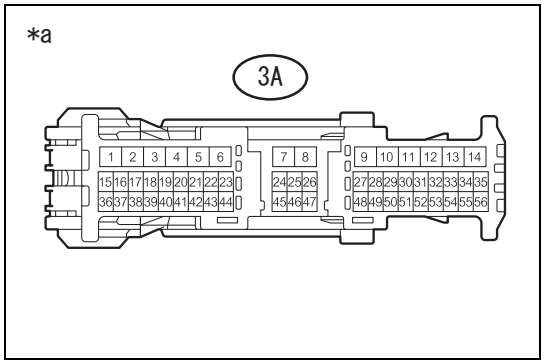

(2) Measure the voltage between the terminals.
Voltage

Inspection terminals	Inspection conditions	Standard value
3A-27 - Chassis ground	Always	11 to 14 V

Captions in illustration

*a	Front side of vehicle wiring harness connector (Instrument panel junction block ASSY connector)

NG → Repair or replacement of wiring harness or connector

OK

4	Inspection of the wiring harness and connector (ECM ground) (Refer to PD - 10)

NG → Repair or replacement of wiring harness or connector

OK

5	Inspection of the instrument panel junction block ASSY itself

(1) Remove the instrument panel junction block ASSY. (Refer to PD - 25)
(2) Remove the main body ECM (network gateway computer) from the instrument panel junction block ASSY.

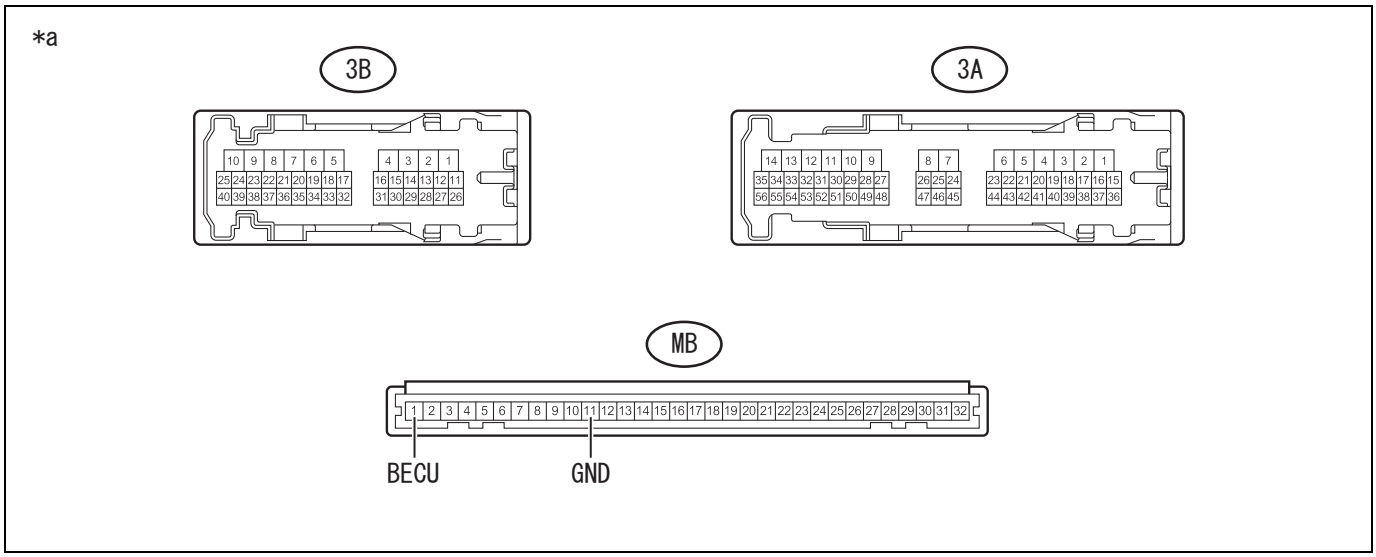

Captions in illustration

*a	Connector not connected (Instrument panel junction block ASSY)	-	-

(3) Measure the resistance between the terminals.

Resistance

Inspection terminals	Inspection conditions	Standard value
3A-27 - MB-1 (BECU)	Always	Less than 1 Ω
3B-18 - MB-11 (GND)	Always	Less than 1 Ω

NG → Replacement of the instrument panel junction block ASSY (Refer to PD - 25)

OK

Replacement of the main body ECM (network gateway computer) (Refer to PD - 25)

PD

DTC	B1013	IGN power supply failure

Circuit description

B1013 is output when an IG circuit malfunction is detected.

Diagnostic codes	Detecting conditions	Faulty part
B1013	The IG voltage is 8.3 V or less, or 16.7 V or more (IG circuit malfunction)	• Main body ECM (Network gateway computer) • Instrument panel junction block ASSY • Wiring harness or connector

Circuit figure

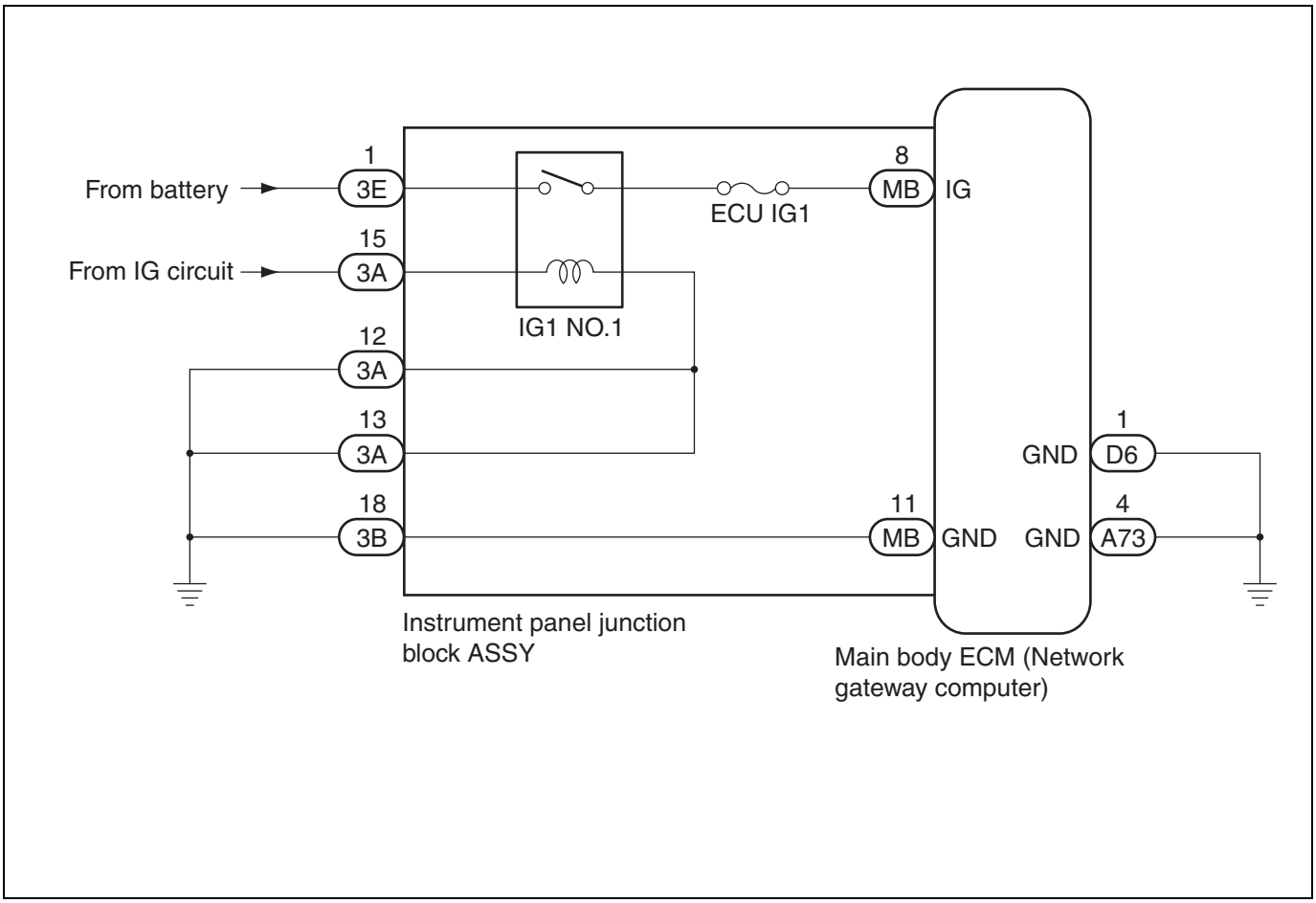

Inspection steps
CAUTION:
Before performing troubleshooting, check the fuse for this circuit.

1	Clearing diagnostic code

(1) Clear the diagnostic code using the SSM4. (Refer to PD - 4)

Next

2	DTC check

(1) Use the SSM4 to confirm that diagnostic code B1013 is not being output again. (Refer to PD - 4)

Result

Result	Go to
If the diagnostic code is being output again	A
If the diagnostic code is not output	B

B → Go to "How to simulate trouble phenomenon" (Refer to IN - 32)

A

3	Inspection of the wiring harness and connector (Power supply voltage)

NOTE:
For inspection procedures and precautions, refer to IN - 36.

(1) Disconnect the instrument panel junction block ASSY connectors 3A and 3E.

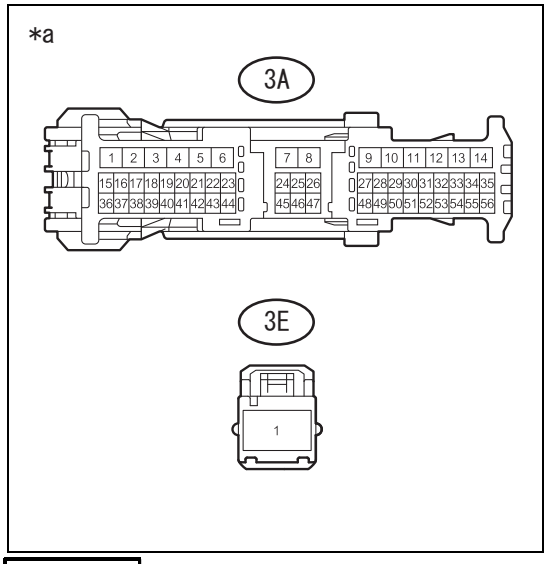

(2) Measure the voltage between the terminals.
Voltage

Inspection terminals	Inspection conditions	Standard value
3A-15 - Chassis ground	IG ON	11 to 14 V
3E-1 - Chassis ground	Always	11 to 14 V

Captions in illustration

*a	Front side of vehicle wiring harness connector (Instrument panel junction block ASSY connector)

NG → Repair or replacement of wiring harness or connector

OK

4	Inspection of the wiring harness and connector (Ground)

NOTE:
For inspection procedures and precautions, refer to IN - 36.

(1) Disconnect the main body ECM (Network gateway computer) connectors D6 and A73.
(2) Disconnect the instrument panel junction block ASSY connectors 3A and 3B.
(3) Measure the resistance between the terminals.

Resistance

Inspection terminals	Inspection conditions	Standard value
D6-1 (GND) - Chassis ground	Always	Less than 1 Ω
A73-4 (GND) - Chassis ground	Always	Less than 1 Ω
3A-12 - Chassis ground	Always	Less than 1 Ω
3A-13 - Chassis ground	Always	Less than 1 Ω
3B-18 - Chassis ground	Always	Less than 1 Ω

NG → Repair or replacement of wiring harness or connector

OK

5	Inspection of the instrument panel junction block ASSY itself

(1) Remove the instrument panel junction block ASSY. (Refer to PD - 25)
(2) Remove the main body ECM (network gateway computer) from the instrument panel junction block ASSY.

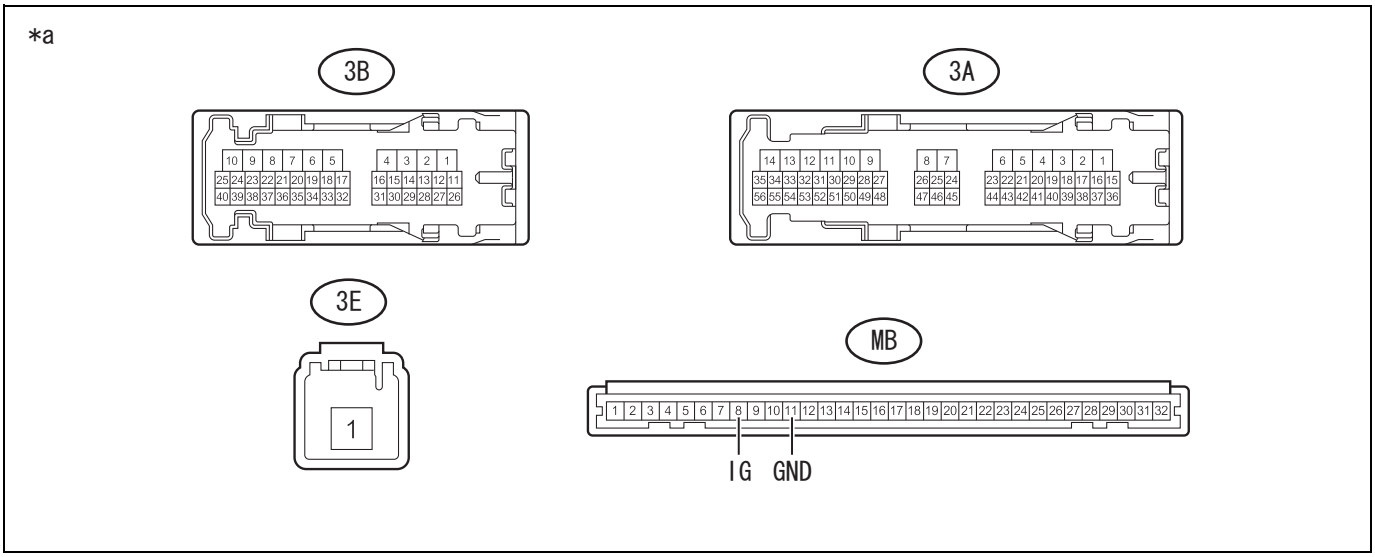

Captions in illustration

*a	Connector not connected (Instrument panel junction block ASSY)	-	-

(3) Measure the resistance between the terminals.

Resistance

Inspection terminals	Inspection conditions	Standard value
3E-1 - MB-8 (IG)	When battery voltage is not applied between terminals 3A-15 and 3A-12.	10 kΩ or more

Inspection terminals	Inspection conditions	Standard value
3E-1 - MB-8 (IG)	When battery voltage is applied between terminals 3A-15 and 3A-12.	Less than 1 Ω
3B-18 - MB-11 (GND)	Always	Less than 1 Ω

NG → Replacement of the instrument panel junction block ASSY (Refer to PD - 25)

OK

Replacement of the main body ECM (network gateway computer) (Refer to PD - 25)

PD

DTC	B1014	ACC power failure

Circuit description

B1014 is output when an ACC circuit malfunction is detected.

Diagnostic codes	Detecting conditions	Faulty part
B1014	The ACC voltage is 8.3 V or less, or 16.7 V or more (ACC circuit malfunction)	• Main body ECM (Network gateway computer) • Instrument panel junction block ASSY • Wiring harness or connector

Circuit figure

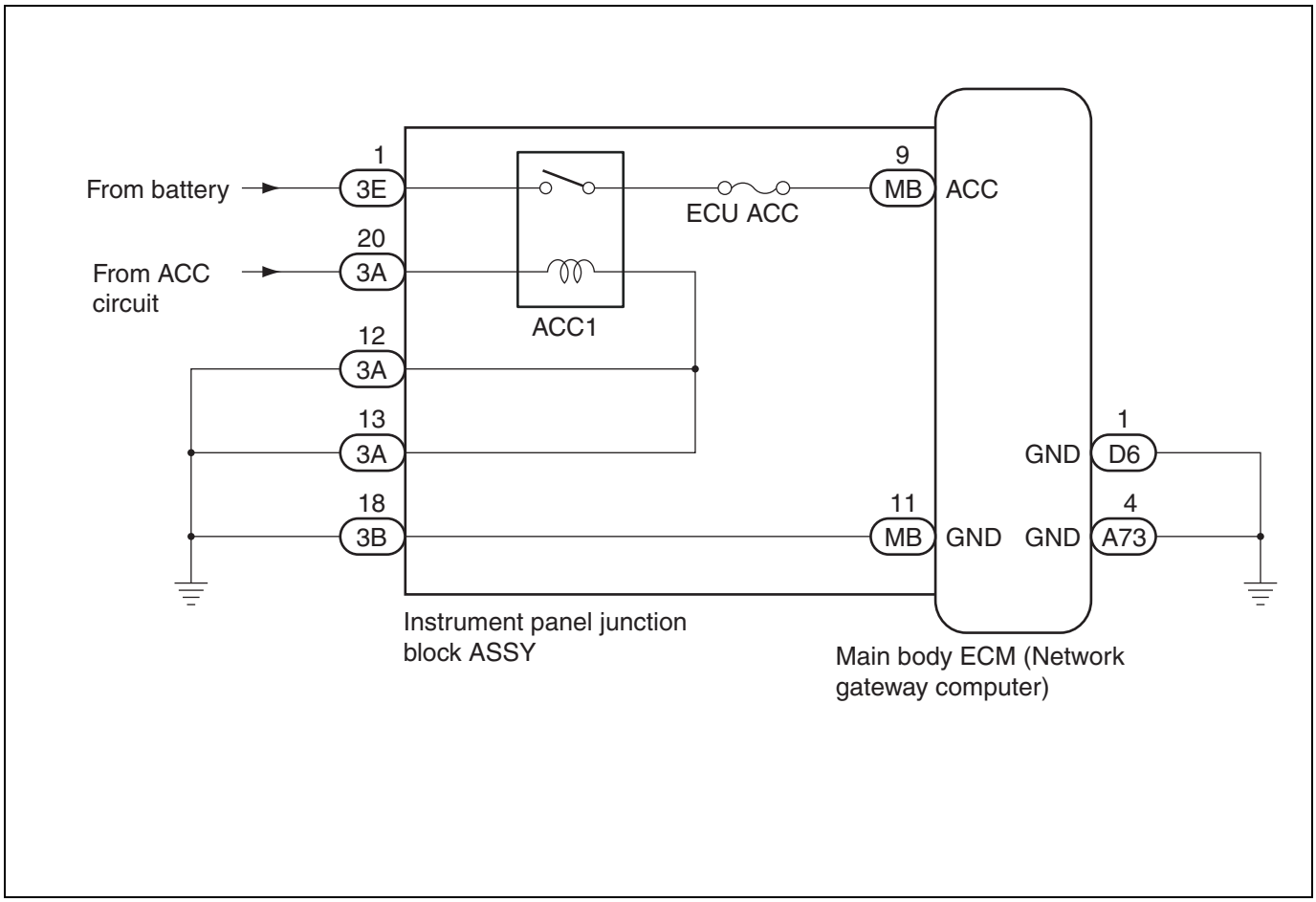

Inspection steps
CAUTION:
Before performing troubleshooting, check the fuse for this circuit.

1	Clearing diagnostic code

(1) Clear the diagnostic code using the SSM4. (Refer to PD - 4)

Next

2	DTC check

PD

(1) Use the SSM4 to confirm that diagnostic code B1014 is not being output again. (Refer to PD - 4)

Result

Result	Go to
If the diagnostic code is being output again	A
If the diagnostic code is not output	B

B → Go to "How to simulate trouble phenomenon" (Refer to IN - 32)

A

3	Inspection of the wiring harness and connector (Power supply voltage)

NOTE:
For inspection procedures and precautions, refer to IN - 36.

(1) Disconnect the instrument panel junction block ASSY connectors 3A and 3E.

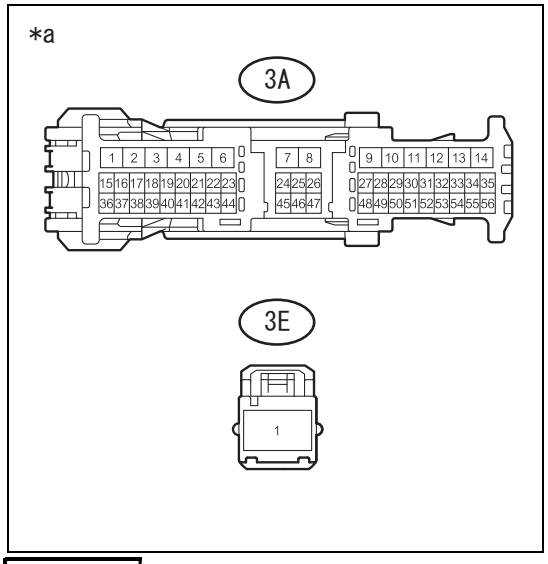

(2) Measure the voltage between the terminals.
Voltage

Inspection terminals	Inspection conditions	Standard value
3A-20 - Chassis ground	ACC ON	11 to 14 V
3E-1 - Chassis ground	Always	11 to 14 V

Captions in illustration

*a	Front side of vehicle wiring harness connector (Instrument panel junction block ASSY connector)

NG → Repair or replacement of wiring harness or connector

OK

4	Inspection of the wiring harness and connector (Ground) (Refer to PD - 15)

NG → Repair or replacement of wiring harness or connector

OK

5	Inspection of the instrument panel junction block ASSY itself

(1) Remove the instrument panel junction block ASSY. (Refer to PD - 25)
(2) Remove the main body ECM (network gateway computer) from the instrument panel junction block ASSY.

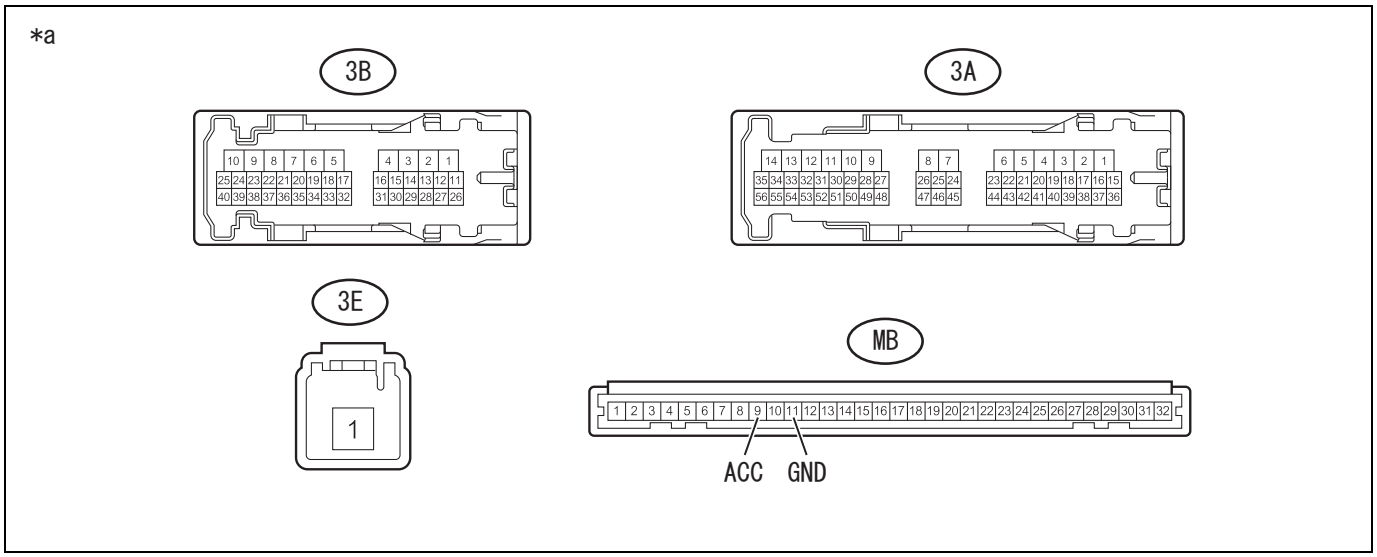

Captions in illustration

*a	Connector not connected (Instrument panel junction block ASSY)	-	-

(3) Measure the resistance between the terminals.

Resistance

Inspection terminals	Inspection conditions	Standard value
3E-1 - MB-9 (ACC)	When battery voltage is not applied between terminals 3A-20 and 3A-12.	10 kΩ or more
3E-1 - MB-9 (ACC)	When battery voltage is applied between terminals 3A-20 and 3A-12.	Less than 1 Ω
3B-18 - MB-11 (GND)	Always	Less than 1 Ω

NG → Replacement of the instrument panel junction block ASSY (Refer to PD - 25)

OK

Replacement of the main body ECM (network gateway computer) (Refer to PD - 25)

Battery sensor

Exploded view

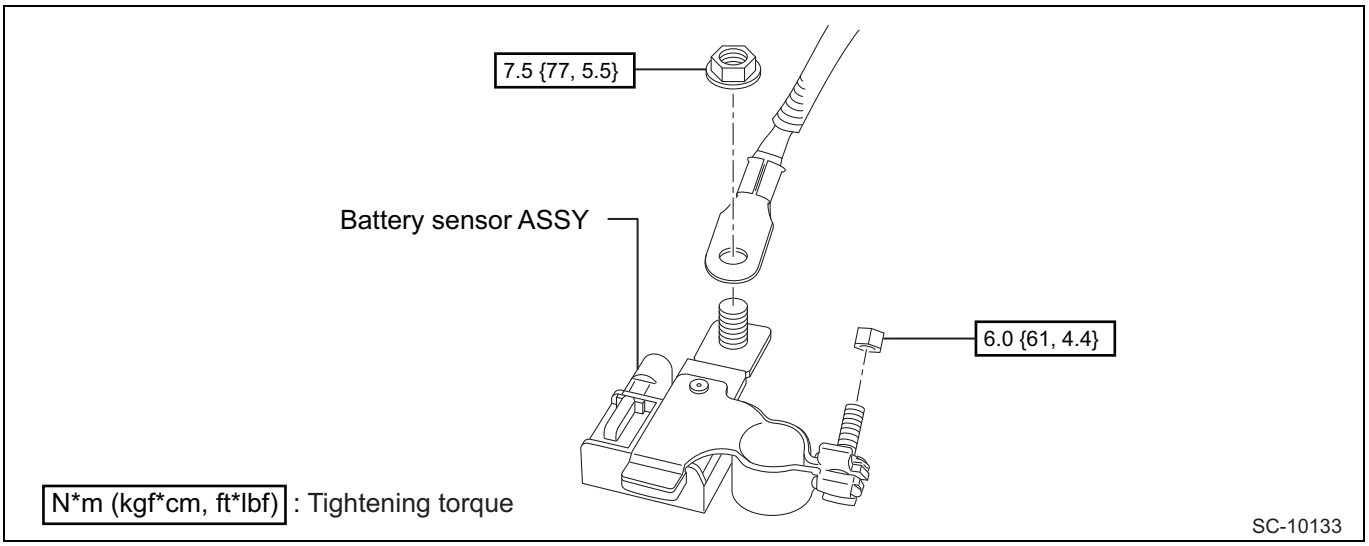

PD

Removal

1. Precautions
   After turning the ignition switch to OFF, you may have to wait for a while before disconnecting the battery terminals. Check appropriate precautions for battery terminal disconnection before proceeding. (Refer to IN - 6)

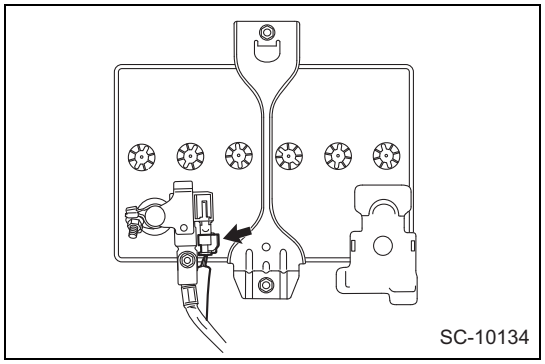

2. Removal of battery sensor ASSY
   (1) Disconnect the connector.

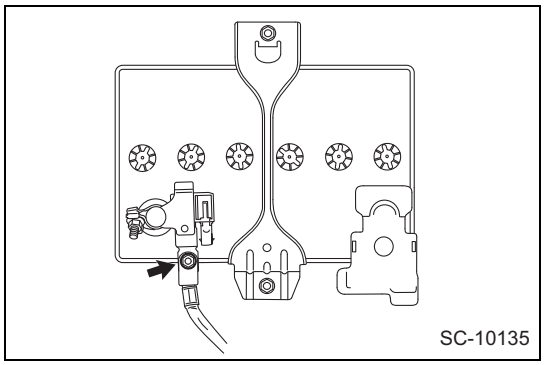

   (2) Undo the nut and disconnect the engine wire from the battery sensor ASSY.
   CAUTION:
   The power windows are equipped with an index function that is linked to the opening and closing of the doors and allows the glass to be opened and closed a little. The molding may be damaged when the doors are opened or closed after disconnecting the battery ground terminal when the glass is completely closed. Therefore, always disconnect the battery ground terminal with the driver's or passenger's seat door open (with the glass lowered to a position that allows free door opening and closing).

Captions in illustration

*1	Engine wire

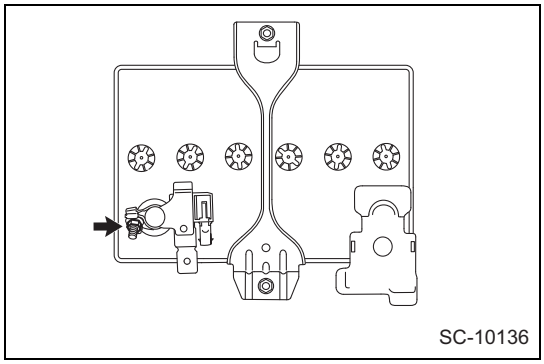
SC-10136

(3) Loosen the nut and remove the battery sensor ASSY.

Installation

1. Installation of battery sensor ASSY
   (1) Install the battery sensor ASSY in place.
   (2) Tighten the nut.
   Standard value:T=6.0N·m {61kgf·cm} {4.4 ft·lbf}
   (3) Connect the engine wire to the battery sensor ASSY with the nut.
   Standard value:T=7.5N·m {77kgf·cm} {5.5ft·lbf}
   (4) Connect the connector.

Unit inspection

Check the battery sensor ASSY for deformation, cracks or other damages.

Main body ECM

Exploded view

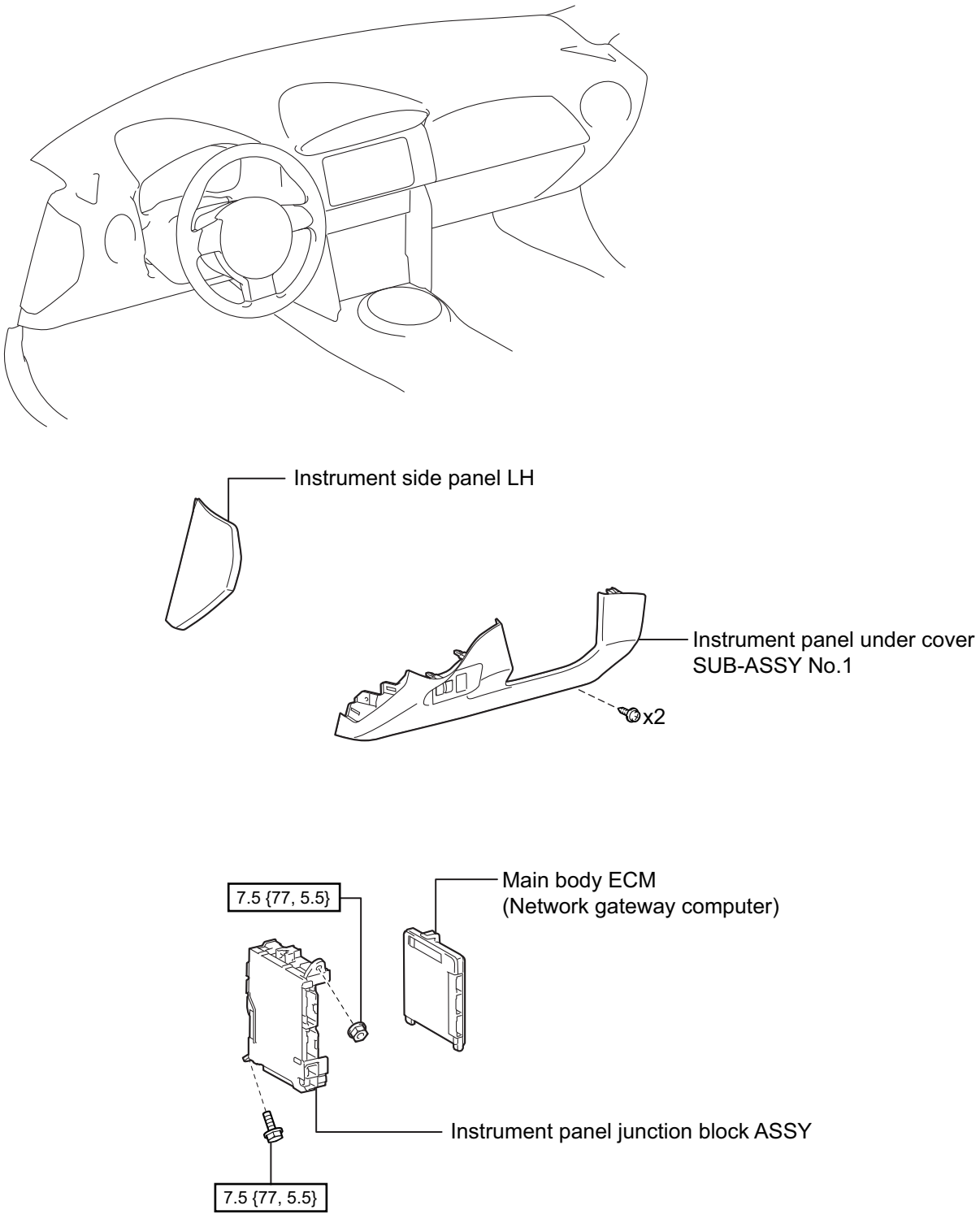

N*m {kgf*cm, ft*lbf}: Tightening torque

SL-10295

Work support

1. When replacing the main body ECM (Network gateway computer)
   (1) For models without smart entry & start system, prepare all the registered keys.
   (2) Use the SSM4 and carry out the following procedure.
      (a)Connect the SSM4 to the DLC3.
      (b)Turn the ignition switch to ON.
      (c)Turn on the SSM4.
      (d)From the SSM4 display screen, select [Each System] →[Body Control] →[Work Support] →[Replacement of ECU] →[Destination/Reading of function setting] and follow the instruction on the screen.
      NOTE:
      Keep a record of any customize registration content that is displayed during this process.
      (e)If an ECM replacement instruction is displayed, click the [OK] button.
   (3) Replace the main body ECM (Network gateway computer).
      NOTE:
      • If you replace the main body ECM (Network gateway computer) without carrying out the above SSM4 procedure, start again and follow the above procedure.
      • Restart the whole procedure if you happen to make a mistake along the way.
2. After replacing the main body ECM (Network gateway computer)
   (1) Use the SSM4 and carry out the following procedure.
      (a)From the SSM4 display screen, select [Each System] →[Body Control] →[Work Support] →[Replacement of ECU] →[Destination/Reading of function setting] and follow the instruction on the screen.
      NOTE:
      Check that the customize registration content that is displayed during this process is the same as what was recorded earlier.
      (b)If a writing complete message is displayed, click the [OK] button to finish the procedure.
      NOTE:
      Restart the whole procedure if you happen to make a mistake along the way.
   (2) If you wish to correct or modify any customize content, select from [Body Control] to [Customize] in the above procedure to set the registration content.
   (3) For models without smart entry & start system, register the immobilizer.
      NOTE:
      For detailed operations, refer to the "Registration manual for immobilizer."

Customize function

1. Customization using the SSM4
   (1) The following procedure can be used to check or set customization.
      (a)Connect the SSM4 to the DLC3.
      (b)Turn the ignition switch to ON.
      (c)Turn on the SSM4.
      (d)Enter the following menu.
      [Each System] →[Body Control] →[Customize]
      (e)Customize the settings according to the table below.

List of customization items

Displayed name	Initial value setting	Contents	Setting
[Light Auto OFF Delay]	30 s	Setting of lighting time for light auto cut function	OFF, 30 s, 60 s or 90 s
[Welcome Light Off Delay Time (Approaching)]	30 s	Setting of lighting time for welcome light function (entering the vehicle)	OFF, 30 s, 60 s or 90 s
[Auto Dimmer Cancel Setting]	3	Setting of auto dimmer cancel function	0 (OFF)/stage 1 (least sensitive)/ stage 2 (less sensitive)/stage 3 (standard)/stage 4 (more sensitive)/ stage 5 (very sensitive)
[Wiper Link Auto Light Setup]	ON	Switching of auto light function linked to wipers ON/ OFF	ON or OFF
[Lane Change Signal Setting]	ON	Switching of lane change signal function ON/OFF	ON or OFF
[Auto Light Sensitivity]	±0%	Auto light control sensor sensitivity (illumination detection) adjustment function settings *1	-40% / -20% / ±0% / +20% / +40%

Displayed name	Initial value setting	Contents	Setting
[DRL Function*2]	ON	ON/OFF of the DRL function	ON or OFF
[Rear defogger operation mode]	Normal	Rear defogger operation drive mode settings	Normal *3/Continuous *4
[Lighting Time]	15 s	Settings so that when the interior lamp is set to "DOOR", the interior lamp automatically turns off after all doors are closed	15 s/7.5 s/30 s
[I/L when ACC OFF]	support	Settings so that when the interior lamp is set to "DOOR", the interior lamp automatically turns on when the vehicle changes from ACC ON →OFF	support/no support
[I/L ON W/Door Key Unlock]	support	Set the function to automatically turn on the interior light in accordance with unlocking operation using a smart key or mechanical key, when the interior light is set to the DOOR mode	support/no support
[Room Light when Approached]	support	Set the function to turn on the interior light when the driver approaches the vehicle carrying the smart key.	support/no support
[Interior Light Control]	support	Settings for the function where the interior lamp turns on by the timer	support/no support
[Security System]	no support	Auto alarm system function settings	support/no support
[Keyless Control]	Yes	Settings for the function that allows you to select to lock the door via operation of the electrical key transmitter SUB-ASSY (Electronic key)	Yes or NO
[Wireless Buzzer Resp]	ON	Wireless door lock buzzer response	OFF or ON
[Hazard Answer Back]	ON	When the wireless lock switch of the transmitter is pressed, all hazard warning lights are illuminated simultaneously. All hazard warning lights illuminate twice when the unlock switch is pressed.	OFF or ON
[Open Door Warning]	ON	The buzzer sounds when the lock is pressed while any door is open.	OFF or ON
[Unlocking operation]	Yes	Settings for the function where all doors are unlocked when the electrical key transmitter SUB-ASSY (Electronic key) is operated twice	Yes or NO
[Panic Alarm Function]	ON	Function to activate the anti-theft system when the panic switch of the electrical key transmitter SUB-ASSY is held down for 1.5 seconds or more.	OFF or ON
[Wireless Auto Lock]	ON	This function turns the wireless auto lock to ON or OFF.	OFF or ON
[Auto Lock Time]	60 seconds	This function controls the time from unlocking all doors until the activation of auto lock function.	30 s, 60 s, 120 s
[Trunk lid unlocking operation]	Long press (short)	Settings for the method of operation when opening the trunk with the electrical key transmitter SUB-ASSY (Electronic key)	single press/2 times ON/Long press(short)/Long press(long)
[Wireless Buzzer Volume]	Level 5	Wireless door lock buzzer volume	Level 7, Level 6, Level 5, Level 4, Level 3, Level 2, Level 1, or Level 0
[Vehicle Finder Function]	OFF	Vehicle position display settings	ON/OFF
[Destination Setting]	Changes depending on the destination	Area settings	Japan/North America/CAN/EU LHD/ EK/CHN/KOR/UNI
[SUBARU/Toyota setting]	Toyota	Manufacturer settings	SUBARU/Toyota
[Auto A/C setting]	support	Automatic air conditioner function settings	support/no support
[Halogen/HID setting*5]	HID	Head light system function settings	Halogen/HID setting*5
[MT/AT Setting]	AT	Transmission type settings	MT/AT
[Factory initial setting]	Factory	Mode to confirm customize settings	Market/Factory
[Initialization of function setting]	-	Customize function initialization	-

*1: As the setting is higher, the light turn on more easily.
*2: Only displayed in the U.S. model.
*3: Rear defogger operation turns OFF after 15 minutes.
*4: Rear defogger operation repeats on a 2 minutes OFF, 15 minutes ON pattern.
*5: The LED headlight is set on the HID display.
NOTE:
- The above settings are to be matched to particular vehicle equipment specifications.

- Do not change any other settings other than the above items when performing function configuration.
- Confirm that the main body ECM (Network gateway computer) registration content [Factory initial setting] is for the correct market. When it is in factory mode, this means that the settings have not been confirmed.

Removal

1. Precautions
   - Always carry out work support when replacing the main body ECM (Network gateway computer). (Refer to PD - 23)
   - After turning the ignition switch to OFF, you may have to wait for a while before disconnecting the battery terminals. Check appropriate precautions for battery terminal disconnection before proceeding.
2. Disconnection of the battery ground terminal (Refer to IN - 6)
3. Removal of the instrument side panel LH (Refer to IT - 24)
4. Removal of the instrument panel under cover SUB-ASSY No. 1 (Refer to ME - 68)

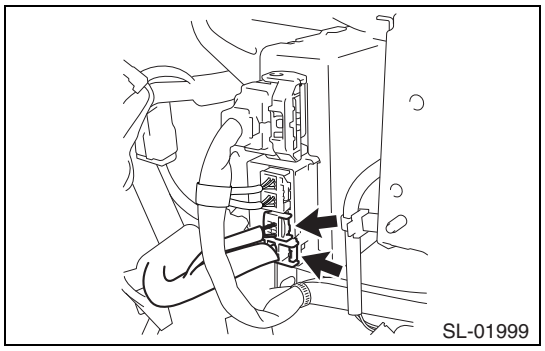
SL-01999

5. Removal of the instrument panel junction block ASSY
   (1) Disconnect the two connectors from the power steering computer ASSY.

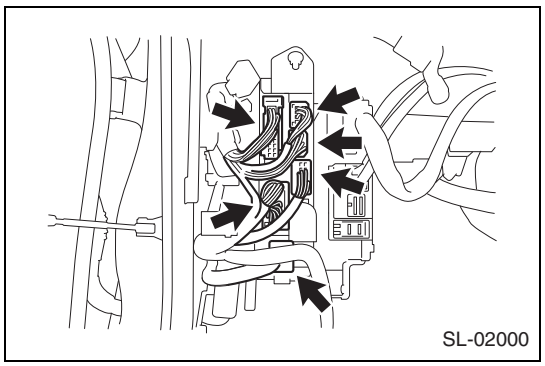
SL-02000

(2) Disconnect the six connectors on the front of the instrument panel junction block ASSY.

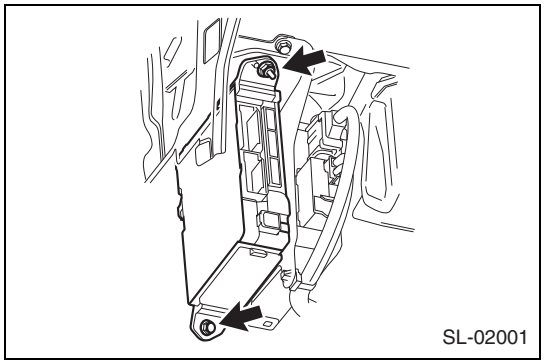
SL-02001

(3) Undo the bolt and nut and detach the instrument panel junction block ASSY.

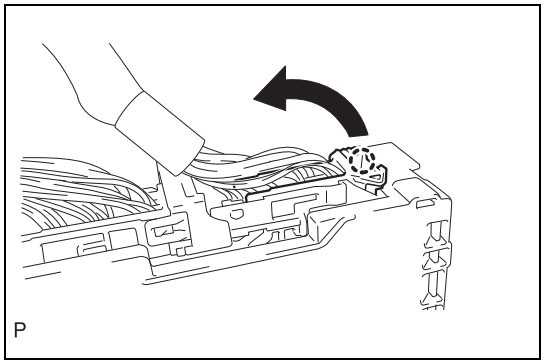

(4) As shown in the diagram, unhook the tabs and disconnect the instrument panel junction block ASSY rear connector.

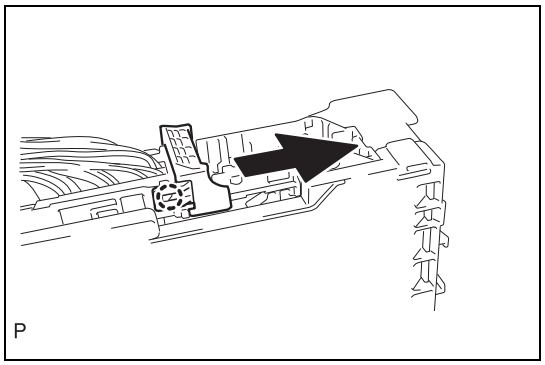

(5) As shown in the diagram, unhook the tabs and release the connector lock.

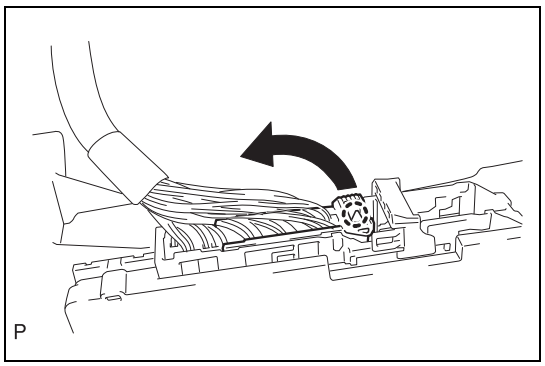

(6) As shown in the diagram, unhook the tabs and detach the connector.
(7) Remove the instrument panel junction block ASSY.

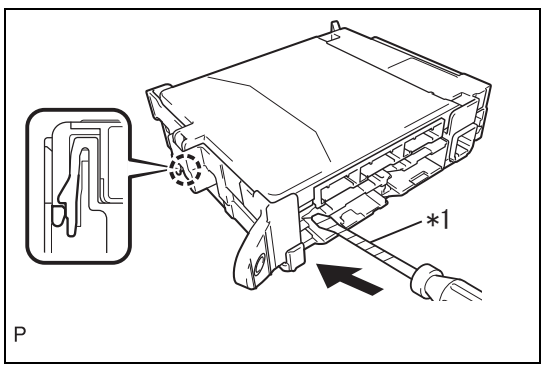

6. Removal of the main body ECM (Network gateway computer)
(1) Press the instrument panel junction block ASSY tab to release the main body ECM (Network gateway computer) lock.
(2) Once the lock is released, insert a flat tip screwdriver horizontally that has been wrapped in protective tape between the main body ECM (Network gateway computer) and the instrument panel junction block ASSY.

Captions in illustration

*1	Protective tape

CAUTION:
Please use a flat tip screwdriver with a shaft diameter between 5.0 mm {0.197 in} and 6.3 mm {0.248 in}, and a length of 90mm {3.543 in} or more.

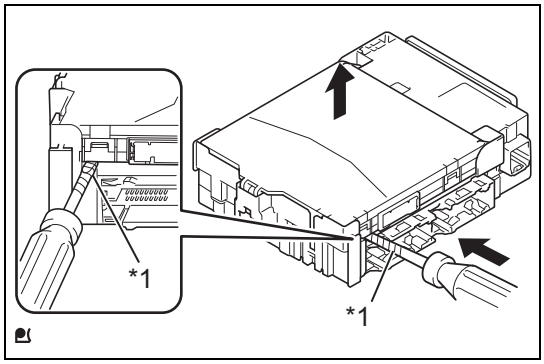

(3) As shown in the diagram, use the inserted flat tip screwdriver to lift up the main body ECM (Network gateway computer) until it is in a position where the connector can be moved.

Captions in illustration

*1	Protective tape

CAUTION:
Do not use the flat tip screwdriver to lift it up with a prying action.

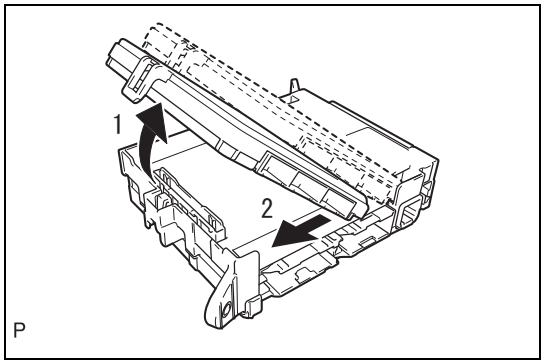

(4) Lift up the main body ECM (Network gateway computer) in the direction of arrow (1) in the diagram and slide it out in the direction of arrow (2).
CAUTION:
Do not touch the ECM connector.

PD

Installation

1. Precautions
Always carry out work support when replacing the main body ECM (Network gateway computer). (Refer to PD - 23)

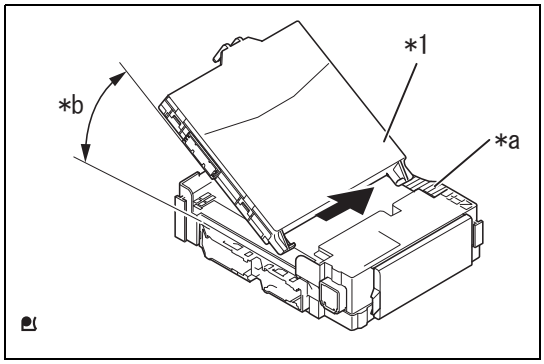

2. Installation of the main body ECM (Network gateway computer)
(1) As shown in the diagram, contact the main body ECM (Network gateway computer) to the instrument panel junction block ASSY housing side wall.

Captions in illustration

*1	Main body ECM (Network gateway computer)
*a	Housing side wall
*b	20° or more

CAUTION:
- Ensure that no foreign objects enter between mating parts.
- Do not touch the main body ECM (Network gateway computer) connector.

NOTE:
The angle between the instrument panel junction block ASSY and the main body ECM (Network gateway computer) should be 20° or more.

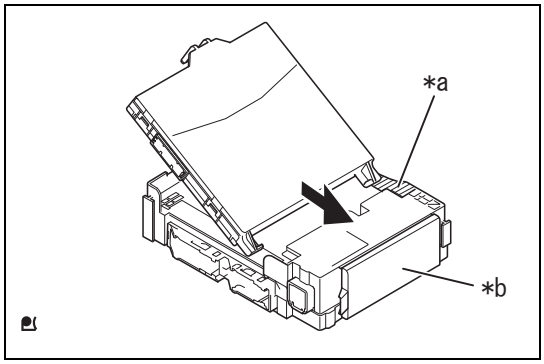

(2) As shown in the diagram, while keeping the main body ECM (Network gateway computer) flush against the instrument panel junction block ASSY housing side wall, slide it in the direction of the junction block fuse and insert it into the 2 guides.

Captions in illustration

*a	Housing side wall
*b	Fuse

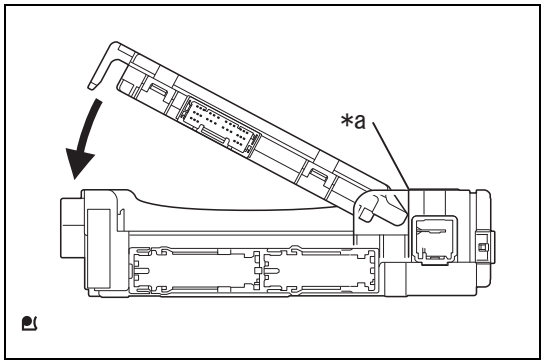

(3) As shown in the diagram, rotate the main body ECM (Network gateway computer) while it is kept in contact with the junction block A face (center of rotation).

Captions in illustration

*a	Junction block A face.

CAUTION:
Do not use excessive force when pressing the side of the main body ECM (Network gateway computer) into the instrument panel junction block ASSY.

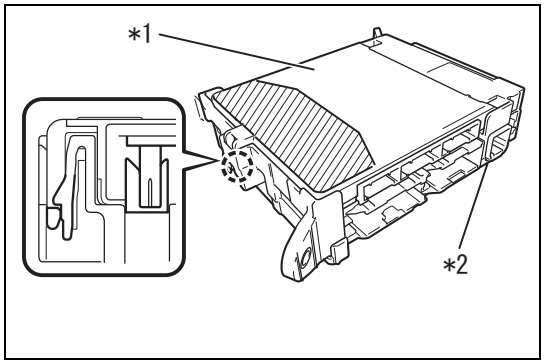

(4) Press the push-area until the tab clicks into the lock to install the main body ECM (Network gateway computer).

Captions in illustration

*1	Main body ECM (Network gateway computer)
*2	Instrument panel junction block ASSY
▨	Pushable area

CAUTION:
- Do not press any place other than the push-area of the main body ECM (Network gateway computer).
- A locking sound should be heard when the main body ECM (Network gateway computer) is pressed in place.
- Do not hit or place heavy weights onto the main body ECM (Network gateway computer) when pressing it in place.

NOTE:
- If you do not hear the locking sound, visually confirm that it is locked in place.
- Confirm that the main body ECM (Network gateway computer) and junction block are at the same height.

3. Installation of the instrument panel junction block ASSY

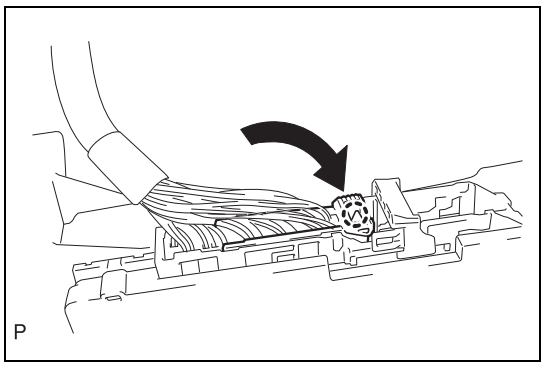

(1) As shown in the diagram, engage the tabs and connect the connector.

CAUTION:
Ensure that the connector is securely attached.

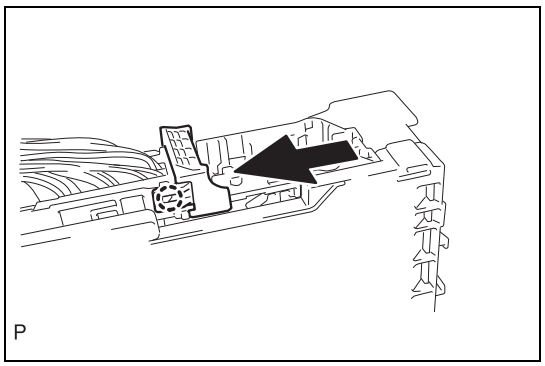

(2) As shown in the diagram, engage the tabs and close the connector lock.

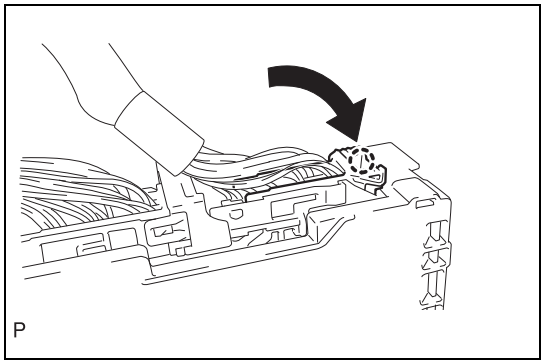

(3) As shown in the diagram, engage the tabs and connect the connector.
(4) Install the instrument panel junction block ASSY and fasten the bolt and nut.
Standard value:T=7.5N·m {77kgf·cm} {5.5ft·lbf}
(5) Connect the six connectors on the front of the instrument panel junction block ASSY.
(6) Connect the two connectors to the power steering computer ASSY.

4. Installation of the instrument panel under cover SUB-ASSY No.1 (Refer to ME - 69)
5. Installation of the instrument side panel LH (Refer to IT - 29)
6. Connection of the battery ground terminal
Standard value:T=6.0N·m {61kgf·cm} {4.4 ft·lbf}
7. Settings when removing/installing battery terminals (Refer to IN - 10)

PD

Network / communication system

Large-scale multiplex communication system for vehicle body [LIN]

Parts location NW-3
List of diagnostic codes NW-4
Description of functions NW-4
How to troubleshoot NW-5
Checking / clearing diagnostic codes NW-7
Circuit figure NW-8
ECM terminal arrangement NW-9
B2321 . . . . . NW-12
B2325 . . . . . NW-14
B2785 . . . . . NW-17
B2786 . . . . . NW-19
B2789 . . . . . NW-22

CAN communication system

Precautions NW-25
Parts location NW-27
System description NW-29
How to troubleshoot NW-30
Basic inspection NW-33
Check using "Check sheet of communication for initializing" NW-33
Check CAN communication circuit NW-44
List of diagnostic codes NW-46
Circuit figure NW-65
ECM terminal arrangement NW-67
Failsafe list NW-79
Sub-lines 57-63 Ω(Transmission control computer ASSY system) NW-82
Sub-lines 57-63 Ω(Brake actuator system) NW-85
Sub-lines 57-63 Ω(Spiral cable SUB-ASSY system) NW-87
Sub-lines 57-63 Ω(Engine control computer system) NW-90
Sub-lines 57-63 Ω(Airbag system) NW-91
Sub-lines 57-63 Ω(Electric power steering system) NW-94
Sub-lines 57-63 Ω(Air conditioner control panel system) NW-97
Sub-lines 57-63 Ω(Combination meter ASSY system) NW-100
Sub-lines 57-63 Ω(Keyless access system) NW-102
Sub-lines 57-63 Ω(Body integrated unit system) NW-104
Exceeding 63 Ω NW-108
Less than 57 Ω NW-113
Check for short to battery NW-121
Check for short to ground NW-128
U1201 . . . . . NW-135
U0073 . . . . . NW-136
U0100 . . . . . NW-137
U0101 . . . . . NW-139
U0122 . . . . . NW-140
U0126 . . . . . NW-142
U0131 . . . . . NW-143
U0140 . . . . . NW-145

U0151 . . . . . NW-146
U0155 . . . . . NW-148
U0164 . . . . . NW-150
U0327 . . . . . NW-151
U0401 . . . . . NW-153
U0402 . . . . . NW-154
U0416 . . . . . NW-156
U0422 . . . . . NW-157
U0423 . . . . . NW-159
U0424 . . . . . NW-161
General diagnostic table NW-162

Large-scale multiplex communication system for vehicle body [LIN]

Parts location

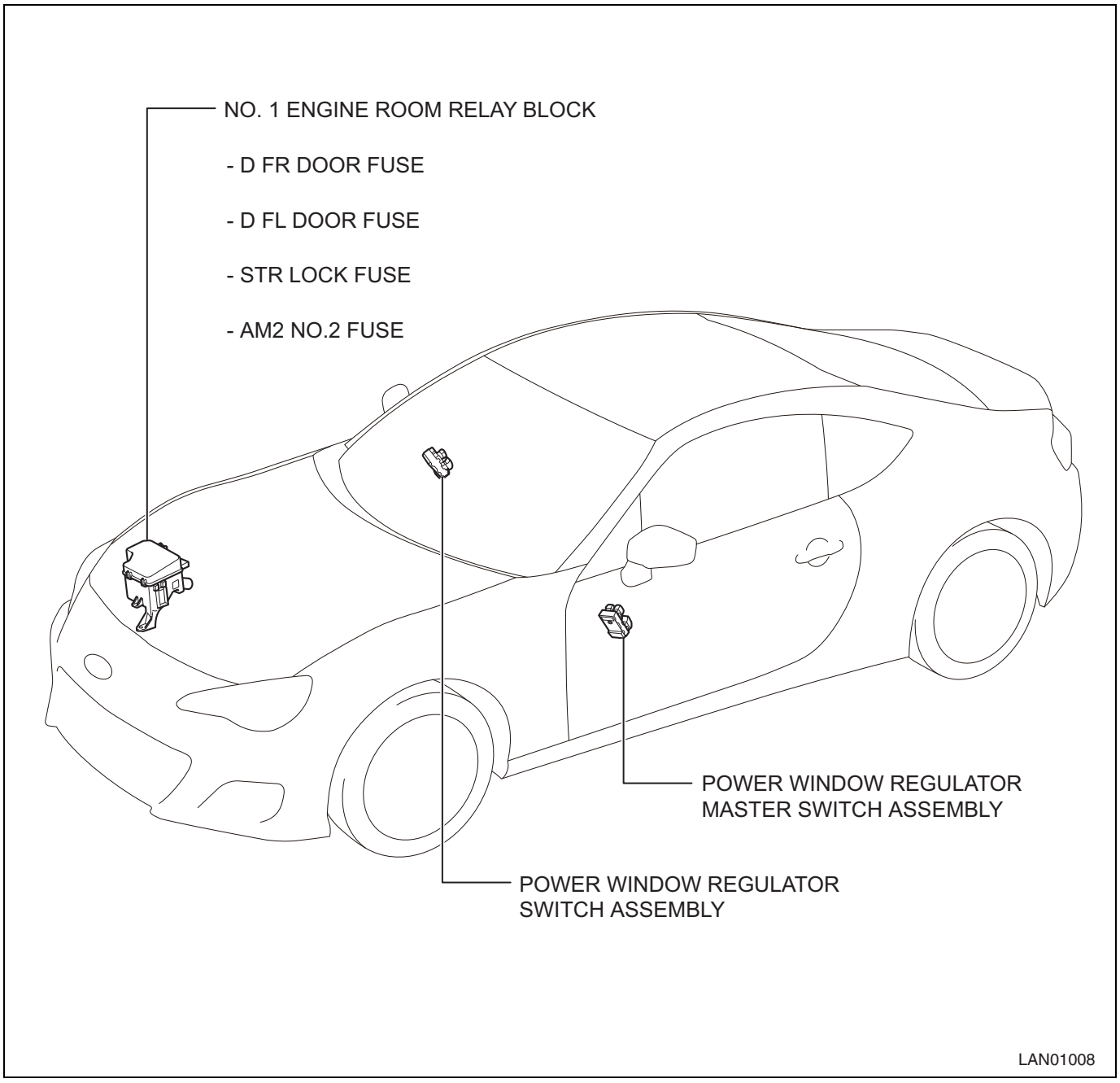

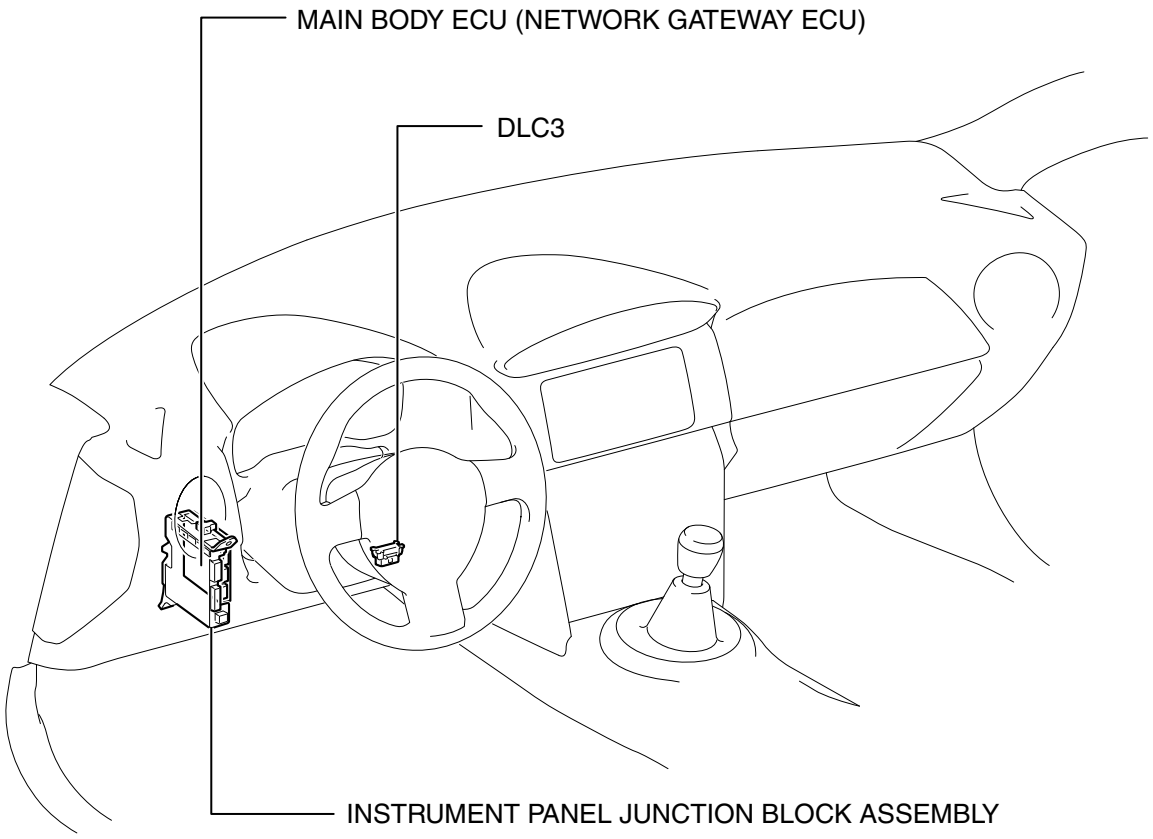

*: w/ ID Code Box

LAN01006

List of diagnostic codes

Diagnostic codes	Diagnostic items	Reference pages
B2321	[D seat P/W ECU communication suspension]	NW - 12
B2325	[Door system LIN communication bus abnormal]	NW - 14
B2785	[LIN communication error]	NW - 17
B2786	[No Response from Steering Lock ECU]	NW - 19
B2789	[No response of the ID code box]	NW - 22

Description of functions

1. Function description of large-scale multiplex communication system for vehicle body [LIN]
   (1) Large-scale multiplex communication system for vehicle body [LIN] is used for communication systems between body system components. When communication failure occurs due to an open circuit and other defects in communication line, diagnostic code of the corresponding system is output by the control master ECM. (Communication systems and the connected ECMs are described below).

NOTE:
Each ECM has the failsafe function to ensure the minimum performance and system protection in case of communication failure.
(a)Door system LIN communication system

Parts (ECM name)	Control master (LIN communication DTC output function)
Main body ECM (Multiplex network body computer) (Main body ECM)	0 (with output function)
Power window regulator master switch ASSY	× (without output function)

(b)Collation system LIN communication system (with smart entry)

Parts (ECM name)	Control master (LIN communication DTC output function)
Smart key computer ASSY (Collation ECM)	0 (with output function)
Steering lock actuator ASSY (Steering lock ECM)	× (without output function)
ID code box *	× (without output function)

*: with ID code box

How to troubleshoot

1	Bring in the car

Next

2	Phenomenon check

Next

3	Communication function inspection of the CAN communication system

(1) Check that there are no abnormal condition in CAN communication system. (Refer to NW - 30)

Result

Result	Go to
If CAN communication system is normal [No DTC (CAN communication error, ECM communication error, or lost communication) is output]	A
If CAN communication system is not normal [DTC (CAN communication error, ECM communication error, or lost communication) is output]	B

B → Repair the fault according to the troubleshooting procedure for CAN system.

A

4	Communication function check of the large-scale multiplex communication system for vehicle body [LIN]

(1) Use SSM4 to check the communication functions of the large-scale multiplex communication system for vehicle body [LIN] to confirm the communication system has no fault. (Refer to NW - 7)
NOTE:
For details of DTC output, refer to the List of DTC. (Refer to NW - 4)

Result

Result	Go to
If the communication system is defective [DTC (LIN communication error, ECM communication error, or lost communication) is output]	A
If DTC other than for communication system is output [No diagnostic code output (LIN communication fault, ECM communication fault/communication breakdown)]	B

B → Go to the corresponding section for DTC output

A

5	DTC check

(1) Use SSM4 to check DTC and record the code output if any. (Refer to NW - 7)
(2) Clear diagnostic code. (Refer to NW - 7)
(3) Simulate the conditions indicated by DTC to check whether the same DTC recur.

Result

Result	Go to
If no DTC is output (phenomenon can be confirmed and reproducible)	A
If no DTC is output (phenomenon can not be confirmed and not reproducible)	B
If DTC is output	C

B → Go to "How to simulate trouble phenomenon". (Refer to IN - 32)

C → Go to Troubleshooting flowchart of each DTC. (Refer to NW - 4)

A

6	Troubleshoot the malfunction according to the method below

(1) ECM terminal arrangement (Refer to NW - 9)

Next

7	Adjustment, repair, or replacement

Next

Complete

Checking / clearing diagnostic codes

1. Checking diagnostic codes (reading with SSM4)
   (1) DTC check for the main body ECM (Multiplex network body computer)
      (a) Connect SSM4 to the data link connector with IG OFF.
      (b) Turn IG to ON, and turn on the SSM4.
      (c) Follow the instruction on SSM4 screen. Select [Each System] →[Body Control] →[DTC], and then read DTC.
      NOTE:
      If meaningless DTC is displayed, the main body ECM (Multiplex network body computer) may be defective.
   (2) DTC check for the collation ECM (smart key computer ASSY)
      (a) Connect SSM4 to the data link connector with IG OFF.
      (b) Turn IG to ON, and turn on the SSM4.
      (c) Follow the instruction on SSM4 screen. Select [Each System] →[Keyless Access(Collation ECM)] →[DTC], and then read DTC.
      NOTE:
      - Collation ECM (Smart key computer ASSY) also outputs DTCs for the steering lock ECM (Steering lock actuator ASSY) and ID code box (immobilizer code ECM)*.
      - If meaningless DTC is displayed, the collation ECM (Smart key computer ASSY) may be defective.

      *: The ID code box is included.
2. Clearing diagnostic code records (Cleared by the SSM4)
   CAUTION:
   To permanently clear DTCs indicating lost connection, "Clear ECM connection history" function must be used.
   (1) Clearing DTC for the main body ECM (Multiplex network body computer)
      (a) Connect SSM4 to the data link connector with IG OFF.
      (b) Turn IG to ON, and turn on the SSM4.
      (c) Follow the instruction on SSM4 screen. Select [Each System] →[Body Control] →[Clear Memory], and then clear DTC.
      CAUTION:
      - If deletion is not possible, retry it after turning the ignition to IG OFF and then on again.
      - Do not use the SSM4 to delete diagnostic codes until the cause of the trouble has been identified.
   (2) Clearing DTC for the collation ECM (Smart key computer ASSY)
      (a) Connect SSM4 to the data link connector with IG OFF.
      (b) Turn IG to ON, and turn on the SSM4.
      (c) Follow the instruction on SSM4 screen. Select [Each System] →[Keyless Access(Collation ECM)] →[Clear Memory], and then clear DTC.
      CAUTION:
      - If deletion is not possible, retry it after turning the ignition to IG OFF and then on again.
      - Do not use the SSM4 to delete diagnostic codes until the cause of the trouble has been identified.

Circuit figure

1. Door system LIN communication circuit

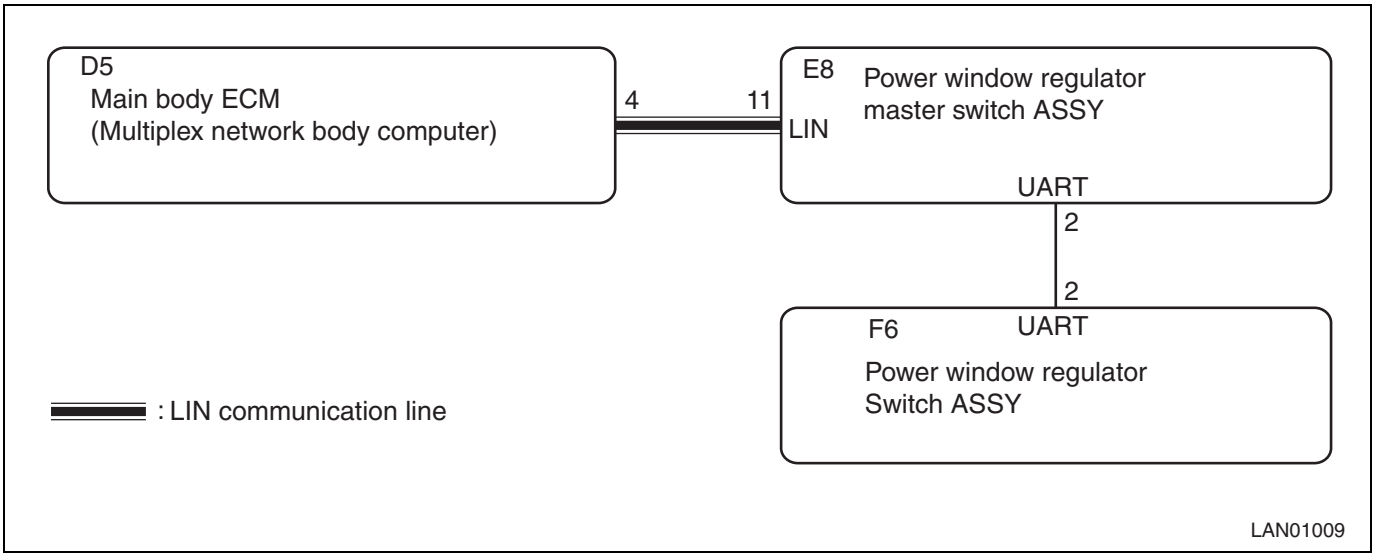

2. Collation system LIN communication circuit (with smart entry and start system)

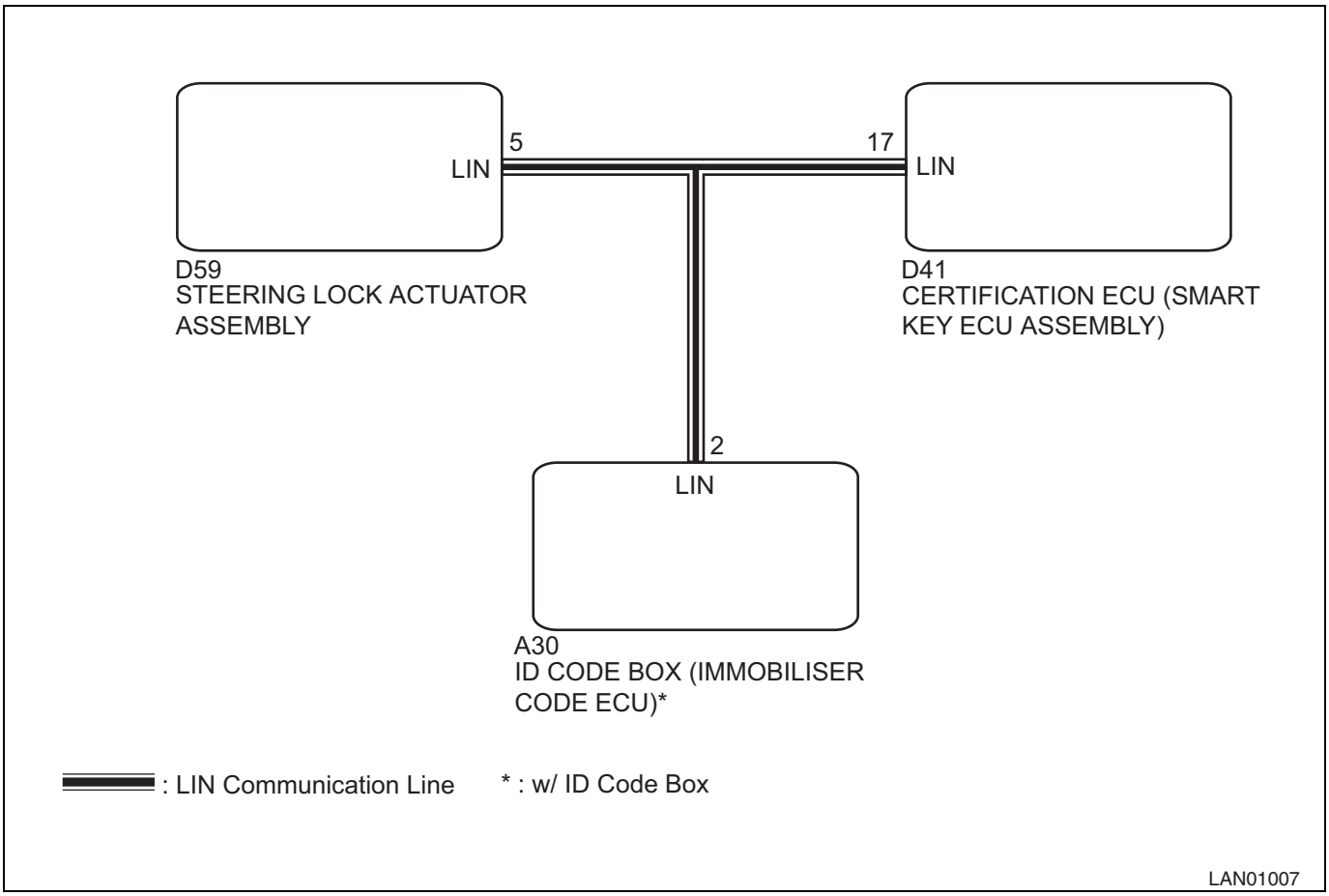

ECM terminal arrangement

1. Instrument panel junction block ASSY, Main body ECM (multiplex network body computer)

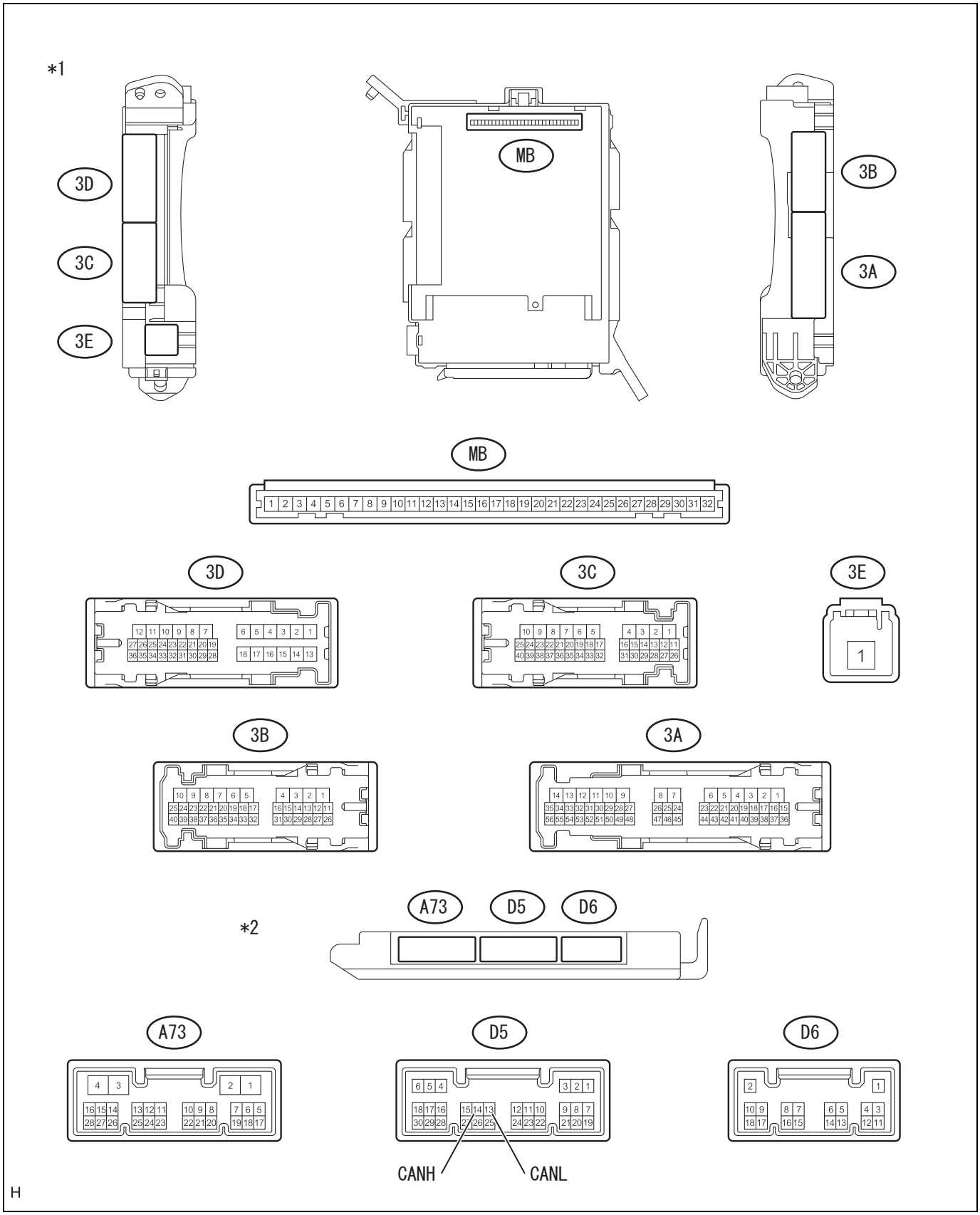

Captions in illustration

*1	Instrument panel junction block ASSY	*2	Main body ECM (Multiplex network body computer)

(1) Check the main body ECM (multiplex network body computer)
(a)Remove the main body ECM (Multiplex network body computer). (Refer to PD - 25)
(b)Measure the voltage and resistance between terminals.

Standard value

Terminal No.	Item	Inspection conditions	Standard value
MB-1 - chassis ground	Voltage	Always	11 to 14V
MB-8 - chassis ground	Voltage	IG ON	11 to 14V
MB-11 - chassis ground	Resistance	Always	Less than 1 Ω
MB-32 - chassis ground	Voltage	Always	11 to 14V

(c) Install the main body ECM (Multiplex network body computer).
(d)Measure the waveform between terminals using an oscilloscope.

Standard value

Terminal No.	Item	Inspection conditions	Standard value
D5-4 (LIN) - D6-1 (GND)	Waveform	IG ON	Pulse generation

2. Power window regulator master switch ASSY

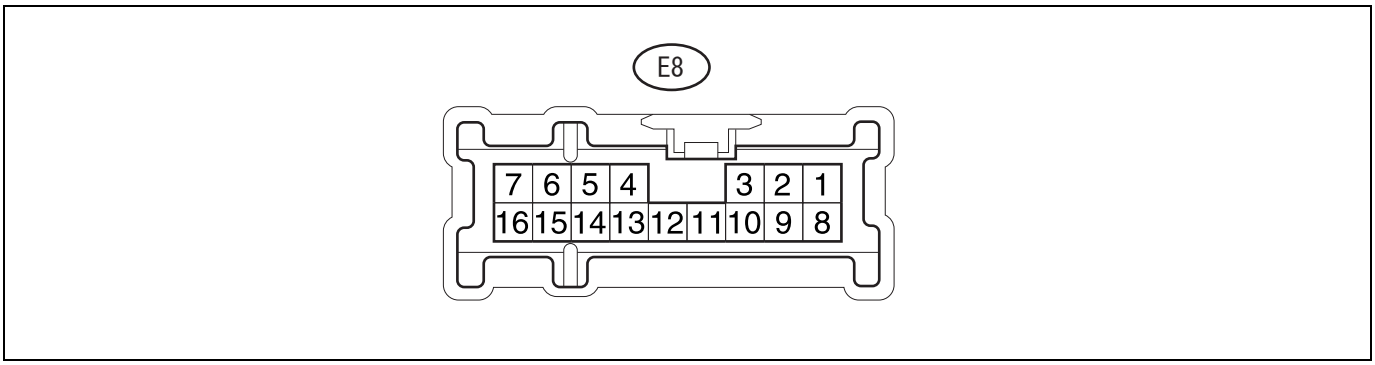

(1) Check the power window regulator master switch ASSY
(a)Disconnect the connector E8 from the power window regulator master switch ASSY.
(b)Measure the voltage and resistance between terminals.

Standard value

Terminal No.	Item	Inspection conditions	Standard value
E8-5 - chassis ground	Resistance	Always	Less than 1 Ω
E8-12 - E8-5	Voltage	Always	11 to 14V

3. Power window regulator switch ASSY

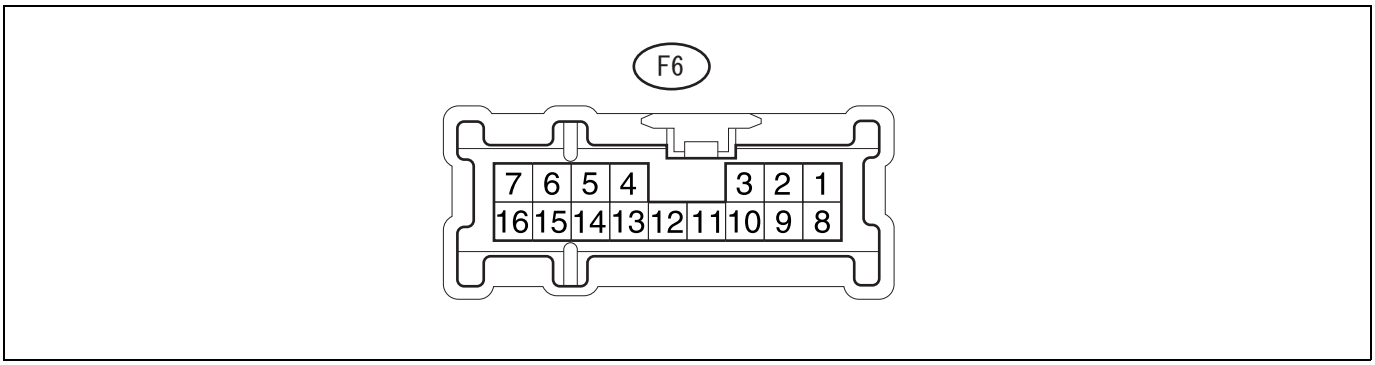

(1) Inspection of the power window regulator switch ASSY
(a)Disconnect the connector F6 of power window regulator switch ASSY.
(b)Measure the voltage and resistance between terminals.

Standard value

Terminal No.	Item	Inspection conditions	Standard value
F6-5 - Chassis ground	Resistance	Always	Less than 1 Ω
F6-12 - F6-5	Voltage	Always	11 to 14V

4. Collation ECM (Smart key computer ASSY) (with smart entry)

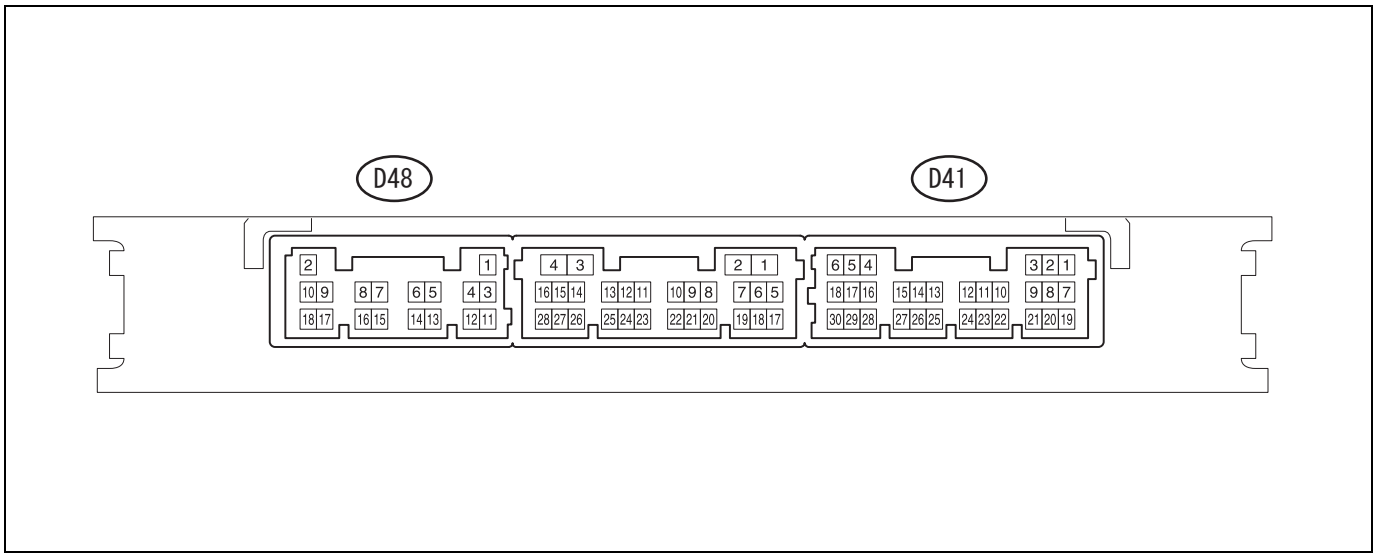

(1) Check the collation ECM (Smart key computer ASSY)

(a)Disconnect the connectors D41 and D48 from the collation ECM (Smart key computer ASSY).

(b)Measure the voltage and resistance between terminals.

Standard value

Terminal No.	Item	Inspection conditions	Standard value
D41-5 - D48-11	Voltage	IG ON	11 to 14V
D48-2 - D48-11	Voltage	Always	11 to 14V
D48-11 - chassis ground	Resistance	Always	Less than 1 Ω

5. Steering lock actuator ASSY (with smart entry)

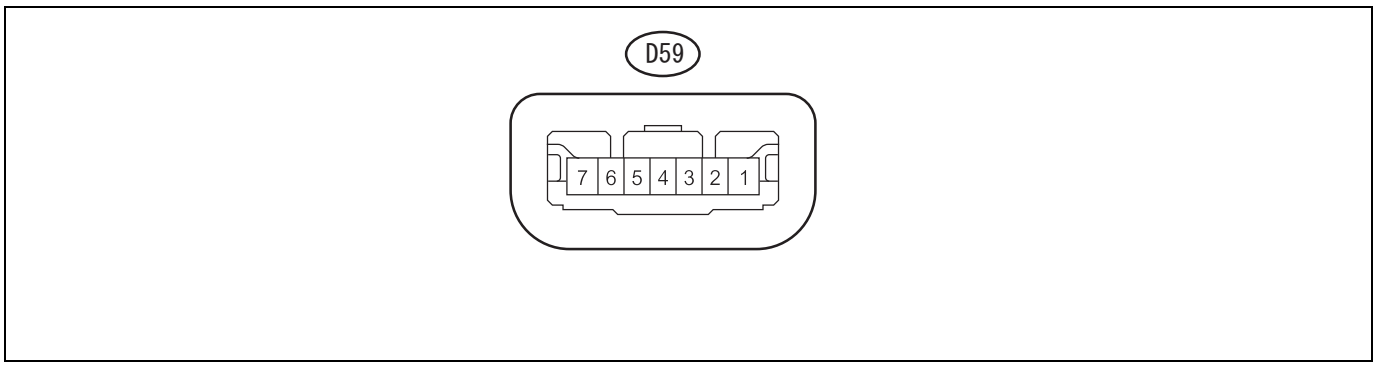

(1) Check the steering lock actuator ASSY

(a)Disconnect the connector D59 from the steering lock actuator ASSY.

(b)Measure the voltage and resistance between terminals.

Standard value

Terminal No.	Item	Inspection conditions	Standard value
D59-1 - chassis ground	Resistance	Always	Less than 1 Ω
D59-6 - D59-1	Voltage	IG ON	11 to 14V
D59-7 - D59-1	Voltage	Always	11 to 14V

6. ID code box (Immobilizer code ECM) (with ID code box)

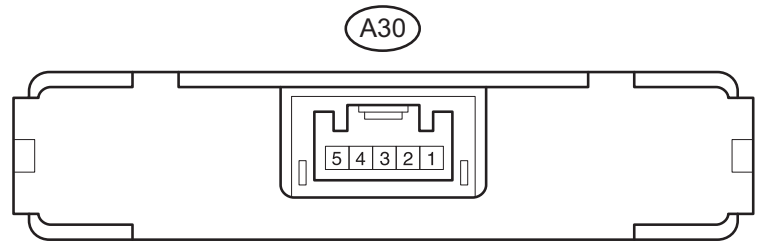

LAN01010

(1) Check the ID code box
(a)Disconnect the connector A30 of the ID code box.
(b)Measure the voltage and resistance between terminals.

NW

Standard value

Terminal No.	Item	Inspection conditions	Standard value
A30-1 - A30-5	Voltage	Always	11 to 14V
A30-5 - chassis ground	Resistance	Always	Less than 1 Ω

DTC	B2321	Lost communication with Driver's P/W ECM

Circuit description

B2321 is output when the communication between the main body ECM (Multiplex network body computer) ←→the power window regulator master switch ASSY is interrupted for 10 seconds or more.

DTC No.	Detecting conditions	Inspection parts
B2321	The periodic transmission from the power windows regulator master switch ASSY is interrupted for 10 seconds or more	• Power window regulator master switch ASSY • Main body ECM (Multiplex network body computer) • Wiring harness or connector

Circuit figure

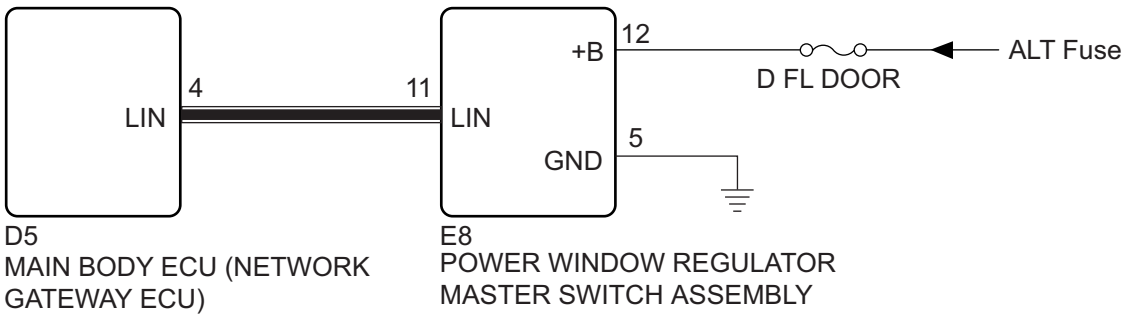

Inspection steps

CAUTION:
Before performing troubleshooting, check the fuse for this circuit.

NOTE:
DTC B2325 is output when all ECMs connected to the door system LIN bus cannot communicate with the main body ECM (Multiplex network body computer).

1	Clearing diagnostic code

(1) Clear the diagnostic code using the SSM4. (Refer to NW - 7)

Next

2	DTC check

(1) Use SSM4 to check DTC output. (Refer to NW - 7)
Result

Result	Go to
DTC B2321 is output	A
DTC B2321 is not output	B

B → Go to "How to simulate trouble phenomenon" (Refer to IN - 32)

A

3	Checking of the wiring harness and connector (Main body ECM (Multiplex network body computer) - Power window regulator master switch ASSY)

(1) Disconnect the connector D5 from the main body ECM (Multiplex network body computer).
(2) Disconnect the connector E8 from the power window regulator master switch ASSY.
(3) Measure the resistance between the terminals.
Resistance (open circuit check)

Inspection terminals	Inspection conditions	Standard value
E8-11 - D5-4	Always	Less than 1 Ω

Resistance (short circuit check)

Inspection terminals	Inspection conditions	Standard value
E8-11 - chassis ground	Always	10 kΩ or more
D5-4 - chassis ground	Always	10 kΩ or more

(4) Reconnect the connector D5 to the main body ECM (multiplex network body computer).

NG → Repair or replacement of wiring harness or connector

OK

4	Checking of the power window regulator master switch ASSY (Power supply system)

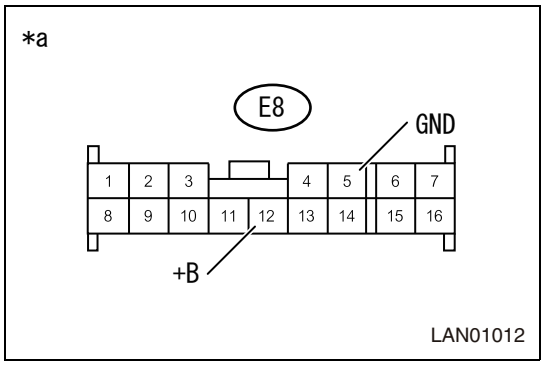

(1) Measure the resistance and voltage between terminals.
Resistance

Inspection terminals	Inspection conditions	Standard value
E8-5 - chassis ground	Always	Less than 1 Ω

Voltage

Inspection terminals	Inspection conditions	Standard value
E8-12 - chassis ground	Always	11 to 14V

Captions in illustration

*a	Front side of vehicle wiring harness connector (Power window regulator master switch ASSY connector)

NG → Repair or replacement of wiring harness or connector

OK

5	Replacement with a new power window regulator master switch ASSY

(1) Replace the power window regulator master switch ASSY with a new one. (Refer to WS - 52)
(2) Clear the diagnostic code using the SSM4. (Refer to NW - 7)

Next

6	DTC check

(1) Using SSM4, check the diagnostic code output again. (Refer to NW - 7)

Result

Result	Go to
DTC B2321 is not output	A
DTC B2321 is output	B

B → Replacement of the main body ECM (Multiplex network body computer) (Refer to PD - 25)

A

Complete (Failure of the power window regulator master switch ASSY)

DTC	B2325	Door system LIN communication bus error

Circuit description

The main body ECM (Multiplex network body computer) monitors the communication between all ECMs connected to the door system LIN bus. If the main body ECM (Multiplex network body computer) detects communication errors with all the ECMs connected to the door system LIN bus, and if the errors are detected three times consecutively, DTC B2325 is output.

DTC No.	Detecting conditions	Inspection items
B2325	Main body ECM (Multiplex network body computer) detects the door system LIN bus communication errors three times consecutively	• Power window regulator master switch ASSY • Main body ECM (Multiplex network body computer) • Wiring harness or connector

Circuit figure

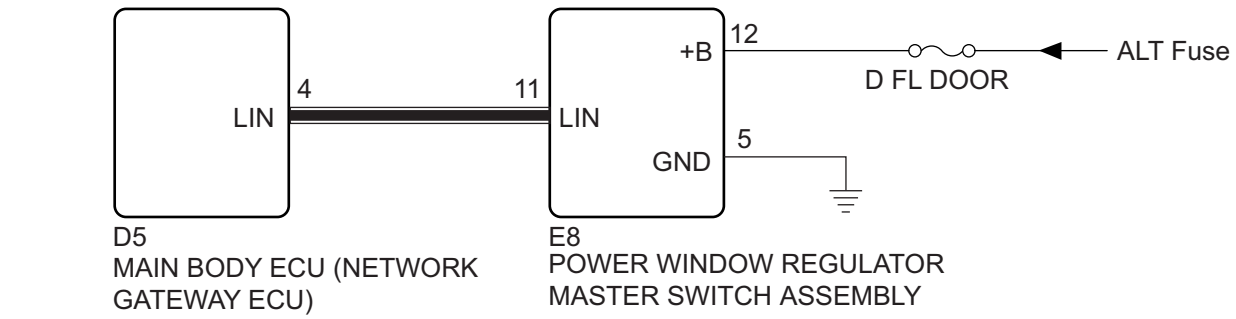

NW

Inspection steps

1	Clearing diagnostic code

(1) Clear the diagnostic code using the SSM4. (Refer to NW - 7)

Next

2	DTC check

(1) Use SSM4 to check DTC output. (Refer to NW - 7)

Result

Result	Go to
DTC B2325 is output	A
DTC B2325 is not output	B

B → Go to "How to simulate trouble phenomenon" (Refer to IN - 32)

A

3	Checking of the wiring harness and connector (Main body ECM (Multiplex network body computer) - Power window regulator master switch ASSY)

(1) Disconnect the connector D5 of the main body ECM (multiplex network body computer).
(2) Disconnect the connector E8 of power window regulator master switch ASSY.
(3) Measure the resistance between the terminals.

Resistance (open circuit check)

Inspection terminals	Inspection conditions	Standard value
E8-11 - D5-4	Always	Less than 1 Ω

Resistance (short circuit check)

Inspection terminals	Inspection conditions	Standard value
E8-11 - chassis ground	Always	10 kΩ or more
D5-4 - chassis ground	Always	10 kΩ or more

(4) Reconnect the connector D5 to the main body ECM (multiplex network body computer).

NG → Repair or replacement of wiring harness or connector

OK

4	Checking of the power window regulator master switch ASSY (Power supply system)

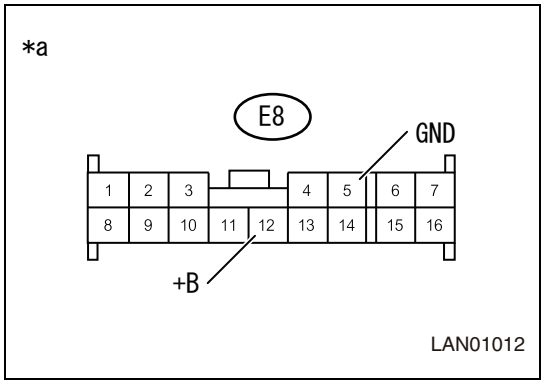

(1) Measure the resistance and voltage between terminals.

Resistance

Inspection terminals	Inspection conditions	Standard value
E8-5 - chassis ground	Always	Less than 1 Ω

Voltage

Inspection terminals	Inspection conditions	Standard value
E8-12 - chassis ground	Always	11 to 14V

Captions in illustration

*a	Front side of vehicle wiring harness connector (Power window regulator master switch ASSY connector)

NG → Repair or replacement of wiring harness or connector

OK

5	Replacement with a new power window regulator master switch ASSY

(1) Replace the multiplex network master switch ASSY with a new part. (Refer to WS - 52)

(2) Clear the diagnostic code using the SSM4. (Refer to NW - 7)

Next

6	DTC check

(1) Check DTC using SSM4.

Criteria: B2325 is not output

NG → Replacement of the main body ECM (Multiplex network body computer) (Refer to PD - 25)

OK

Complete (Failure of the power window regulator master switch ASSY)

DTC	B2785	LIN communication error

Circuit description

The collation ECM (Smart key computer ASSY) monitors the communication with the steering lock actuator ASSY connected to the collation system LIN bus. If the collation ECM (Smart key computer ASSY) detects an error in the communication with the steering lock actuator ASSY connected to the collation system LIN bus, it monitors the communication errors for a certain period of time. When it detects three consecutive errors (in approx. 1 second), DTC B2785 is output.

DTC No.	Detecting conditions	Faulty part
B2785	When the collation ECM (Smart key computer ASSY) detected the collation system LIN bus communication error continuing for 1 second or more	• Collation ECM (Smart key computer ASSY) • Steering lock actuator ASSY • ID code box (Immobilizer code ECM)* • Wiring harness or connector

*: with ID code box

Circuit figure

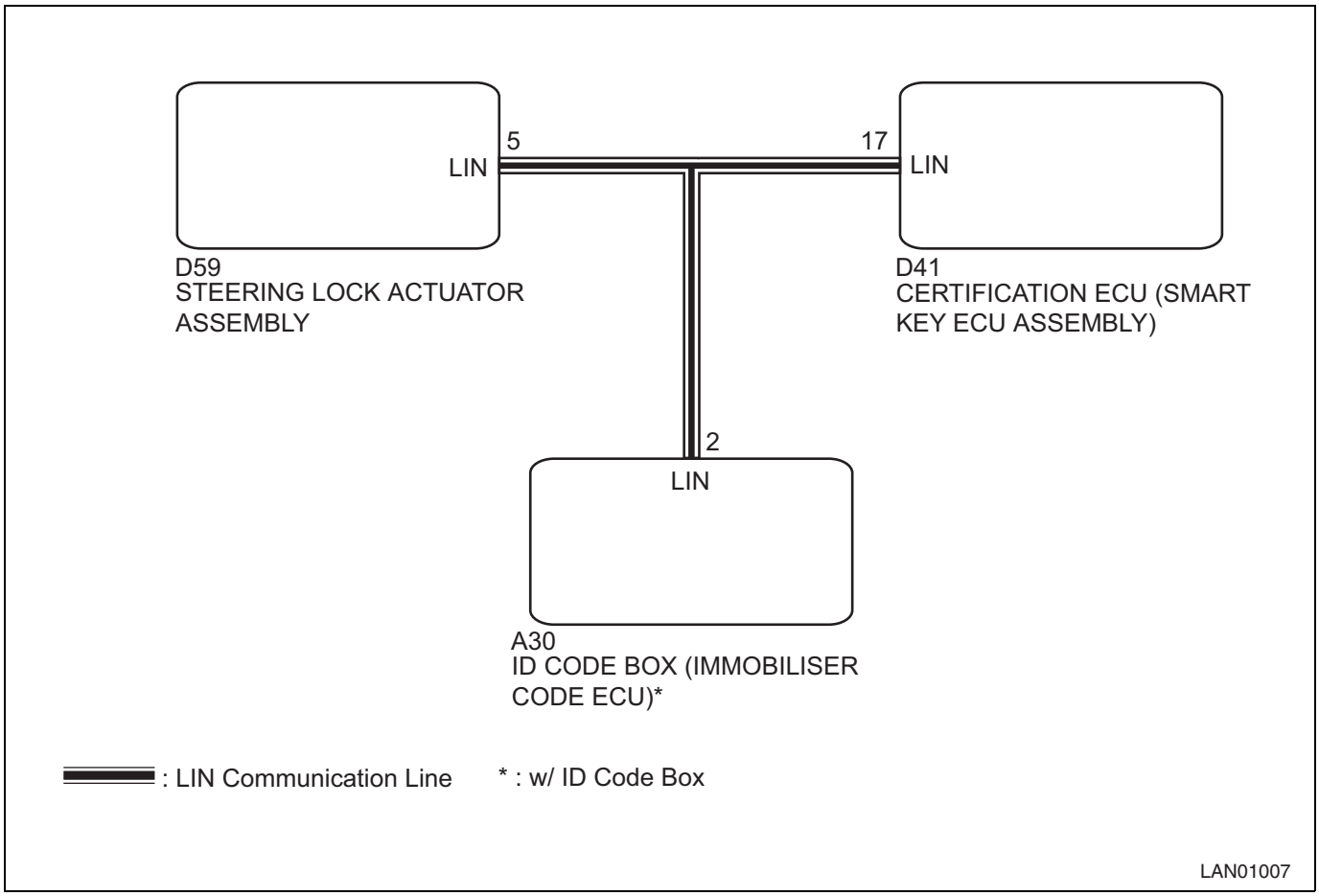

Inspection steps

CAUTION:

To replace the collation ECM (Smart key computer ASSY), the steering lock actuator ASSY, and the ID code box, refer to the procedure for engine immobilizer system registration.

1	Clearing diagnostic code

(1) Clear the diagnostic code using the SSM4. (Refer to NW - 7)

Next

2	DTC check

(1) Use SSM4 to check DTC output. (Refer to NW - 7)

Result

Result	Go to
B2785 is output	A
B2785 is not output	B

B → Go to "How to simulate trouble phenomenon" (Refer to IN - 32)

A

3	Checking of the LIN communication line (Collation ECM (Smart key computer ASSY) - Steering lock actuator ASSY)

(1) Disconnect the connector D41 from the collation ECM (Smart key computer ASSY).
(2) Disconnect the connector D59 from the steering lock actuator ASSY.
(3) Disconnect the connector A30 from the ID code box (Immobilizer code ECM)*.
(4) Measure the resistance between the terminals.

Resistance (open circuit check)

Inspection terminals	Inspection conditions	Standard value
D41-17 - D59-5	Always	Less than 1 Ω
D41-17 - A30-2*	Always	Less than 1 Ω

Resistance (short circuit check)

Inspection terminals	Inspection conditions	Standard value
D41-17 - chassis ground	Always	10 kΩ or more
D59-5 - chassis ground	Always	10 kΩ or more
A30-2 - chassis ground*	Always	10 kΩ or more

(5) Reconnect the connector D41 to the collation ECM (Smart key computer ASSY).

*: with ID code box

NG → Repair or replacement of wiring harness or connector

OK

4	DTC check (Steering lock actuator ASSY)

(1) Check DTC using SSM4. (Refer to NW - 7)

Result

Result	Go to
B2785 is not output	A
B2785 is output	B

(2) Reconnect the connector D59 to the steering lock actuator ASSY.

B → Replacement of the collation ECM (Smart key computer ASSY)

A

5	Replacement of the steering lock actuator ASSY connector or ID code box (with ID code box)

(1) Replace the collation ECM (Smart key computer ASSY) or ID code box* with a new part.
(2) Clear the diagnostic code using the SSM4. (Refer to NW - 7)
*: with ID code box

Next

6	Rechecking the diagnostic codes

(1) Using SSM4, check the diagnostic code again. (Refer to NW - 7)
Result

Result	Go to
B2785 is not output	A
B2785 is output	B

B → Replacement of the collation ECM (Smart key computer ASSY)

A

Complete (Failure of the steering lock actuator ASSY connector or ID code box (with ID code box))

DTC	B2786	No response from steering lock ECM

Circuit description

- The collation ECM (Smart key computer ASSY) maintains LIN communication with the steering lock actuator ASSY.
- The collation ECM (Smart key computer ASSY) outputs this DTC when the communication with the steering lock actuator ASSY has been interrupted for 10 seconds or more.

DTC No.	Detecting conditions	Inspection parts
B2786	LIN communication error between the collation ECM (Smart key computer ASSY) and the steering lock actuator ASSY	• Wiring harness or connector • Collation ECM (Smart key computer ASSY) • Steering lock actuator ASSY

Circuit figure

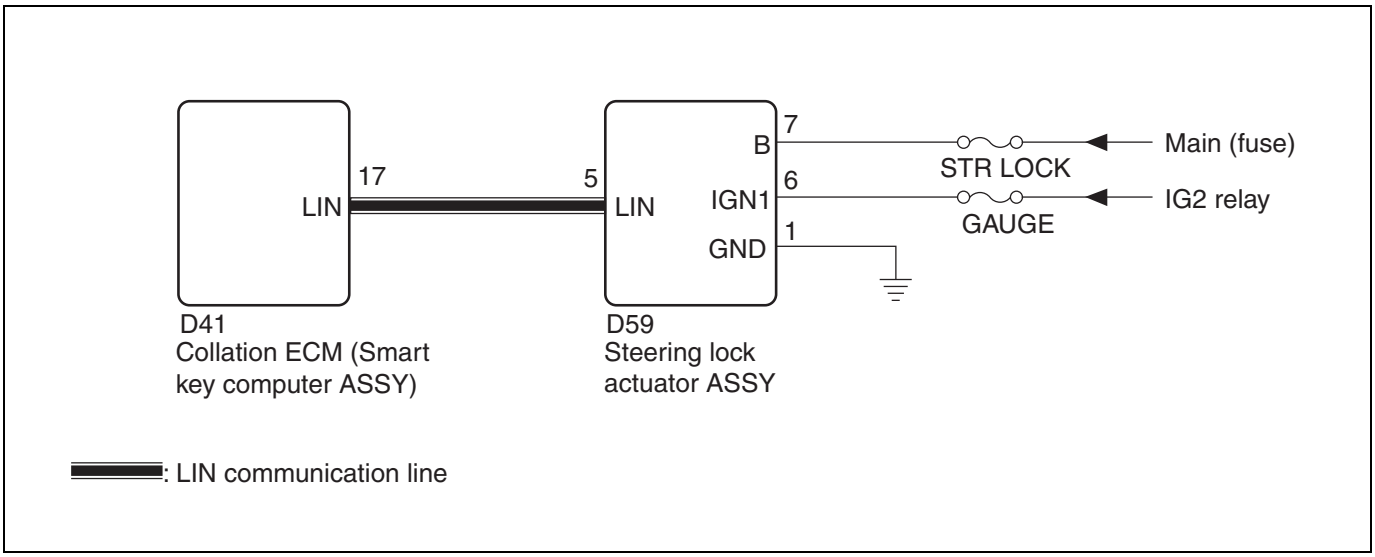

NW

Inspection steps

CAUTION:

- To replace the collation ECM (Smart key computer ASSY) and the steering lock actuator ASSY, refer to the procedure for engine immobilizer system registration.
- Before performing troubleshooting, check the fuse for this circuit.

1	DTC check

(1) Clear the diagnostic code using the SSM4. (Refer to NW - 7)

Result

Result	Go to
Only B2786 is output	A
Both B2785 and B2786 are output	B

NOTE:

If both B2785 and B2786 are output, follow the troubleshooting step for B2785 first.

B → Go to "List of diagnostic codes" (Refer to NW - 4)

A

2	Checking of the LIN communication line (Collation ECM (Smart key computer ASSY) - Steering lock actuator ASSY)

(1) Disconnect the connector D41 from the collation ECM (Smart key computer ASSY).

(2) Disconnect the connector D59 from the steering lock actuator ASSY.

(3) Measure the resistance between the terminals.

Resistance (open circuit check)

Inspection terminals	Inspection conditions	Standard value
D41-17 - D59-5	Always	Less than 1 Ω

Resistance (short circuit check)

Inspection terminals	Inspection conditions	Standard value
D41-17 - chassis ground	Always	10 kΩ or more
D59-5 - chassis ground	Always	10 kΩ or more

(4) Reconnect the connector D41 to the collation ECM (Smart key computer ASSY).

NG → Repair or replacement of wiring harness or connector

OK

3 Checking of the wiring harness and connector (Power supply system)

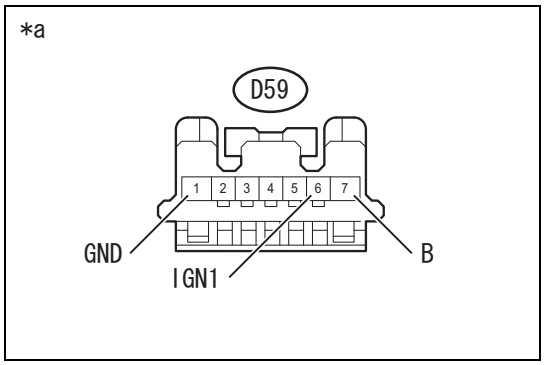

(1) Measure the resistance and voltage between terminals.

Resistance

Inspection terminals	Inspection conditions	Standard value
D59-1 - chassis ground	Always	Less than 1 Ω

Voltage

Inspection terminals	Inspection conditions	Standard value
D59-6 - chassis ground	IG ON	11 to 14 V
D59-7 - chassis ground	Always	11 to 14 V

Captions in illustration

*a	Front side of vehicle wiring harness connector (Steering lock actuator ASSY connector)

NG → Repair or replacement of wiring harness or connector

OK

4 Replacement with a new steering lock actuator ASSY

(1) Replace the steering lock actuator ASSY with a new part. (Refer to SR - 54)

(2) Clear the diagnostic code using the SSM4. (Refer to NW - 7)

Next

5 Rechecking the diagnostic codes

(1) Using SSM4, check the diagnostic code again. (Refer to NW - 7)

Result

Result	Go to
B2786 is not output	A
B2786 is output	B

B → Replacement of the collation ECM (Smart key computer ASSY)

A

Complete (Failure of the steering lock actuator ASSY)

DTC	B2789	No response from the ID code box

Circuit description

- The collation ECM (Smart key computer ASSY) maintains LIN communication with the ID code box.
- The collation ECM (Smart key computer ASSY) outputs this DTC when the communication with the steering lock actuator ASSY has been interrupted for 10 seconds or more.

DTC No.	Detecting conditions	Inspection parts
B2789	LIN communication error between the collation ECM (Smart key computer ASSY) and the ID code box	• Wiring harness or connector • Collation ECM (Smart key computer ASSY) • ID code box

NW

Circuit figure

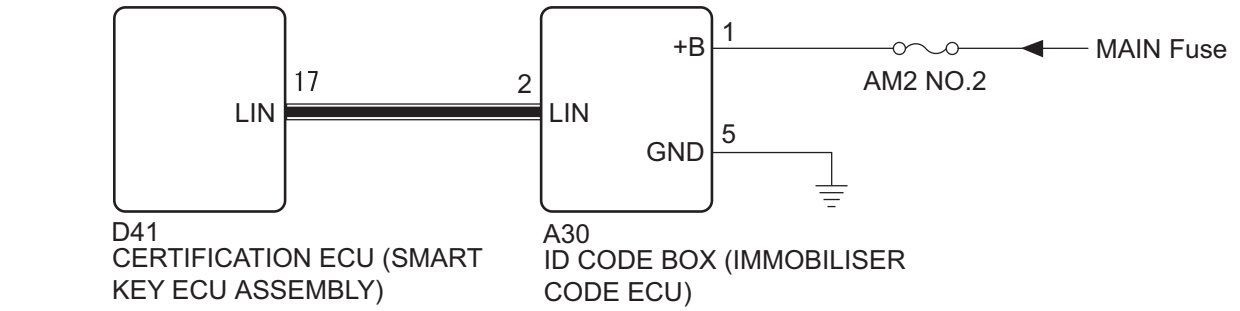

Inspection steps

CAUTION:

- To replace the collation ECM (Smart key computer ASSY), the steering lock actuator ASSY, and the ID code box, refer to the procedure for engine immobilizer system registration.
- Before performing troubleshooting, check the fuse for this circuit.

1	DTC check

(1) Clear the diagnostic code using the SSM4. (Refer to NW - 7)

Result

Result	Go to
Only B2789 is output	A
Both B2785 and B2789 are output	B

NOTE:

If both B2785 and B2789 are output, follow the troubleshooting step for B2785 first.

B → Go to "List of diagnostic codes" (Refer to NW - 4)

A

2	Checking of the LIN communication line (Collation ECM (Smart key computer ASSY) - ID code box (immobilizer code ECM))

(1) Disconnect the connector D41 from the collation ECM (Smart key computer ASSY).
(2) Disconnect the connector A30 of the ID code box.
(3) Measure the resistance between the terminals.

Resistance (open circuit check)

Inspection terminals	Inspection conditions	Standard value
D41-17 - A30-2	Always	Less than 1 Ω

Resistance (short circuit check)

Inspection terminals	Inspection conditions	Standard value
D41-17 - chassis ground	Always	10 kΩ or more
A30-2 - chassis ground	Always	10 kΩ or more

(4) Reconnect the connector D41 to the collation ECM (Smart key computer ASSY).

NG → Repair or replacement of wiring harness or connector

OK

3	Checking of the wiring harness and connector (Power supply system)

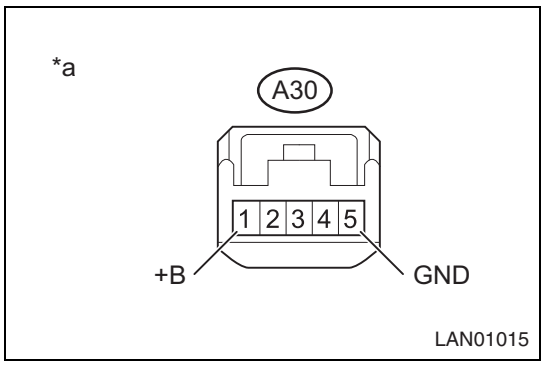

(1) Measure the resistance and voltage between terminals.

Resistance

Inspection terminals	Inspection conditions	Standard value
A30-5 - chassis ground	Always	Less than 1 Ω

Voltage

Inspection terminals	Inspection conditions	Standard value
A30-1 - chassis ground	Always	11 to 14 V

Captions in illustration

*a	Front side of vehicle wiring harness connector (ID code box connector)

NG → Repair or replacement of wiring harness or connector

OK

4	Replacement with a new ID code box

(1) Replace the ID code box with a new part.
(2) Clear the diagnostic code using the SSM4. (Refer to NW - 7)

Next

5	Rechecking the diagnostic codes

(1) Using SSM4, check the diagnostic code again. (Refer to NW - 7)
Result

Result	Go to
B2789 is not output	A
B2789 is output	B

B → Replacement of the collation ECM (Smart key computer ASSY)

NW

A

Complete (Failure of the ID code box)

CAN communication system

Precautions

1. If DTC related with CAN communication system is output, always start the troubleshooting according to the procedure described in "How to troubleshoot". (Refer to NW - 30)
2. Caution in handling of SRS airbag system (Refer to RS - 5)
   CAUTION:
   This service operation may affect the SRS airbag. Be sure to follow the precautions for SRS airbag during the operation.

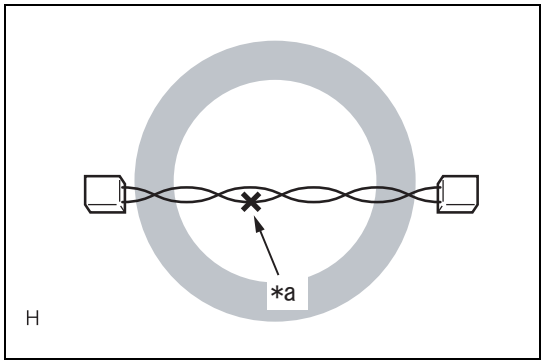

3. Caution during harness repair
   (1) When repairing the wire, connect the wires using soldering and protect it with tape.

Captions in illustration

*a	Soldering and protection with tape

CAUTION:
- Bus lines (communication lines) must be twisted. Be careful not to make clearance between CAN-H and CAN-L.
- Fray at the connector should be within 8 cm.
- Do not change the line length. (CAN-H and CAN-L must have the same length).

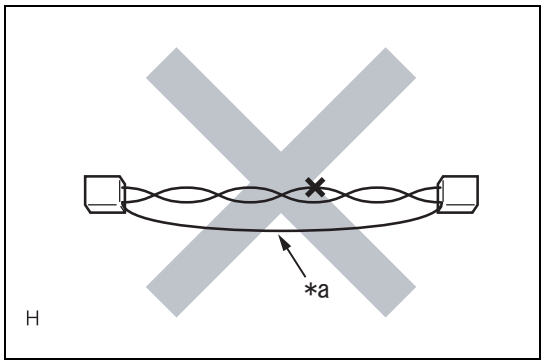

(2) Do not connect a wire to bypass the defective section.

Captions in illustration

*a	Bypass wire connection

CAUTION:
- If bypassed, the twisted lines will lose their properties.
- Do not bypass using the twisted pair line.

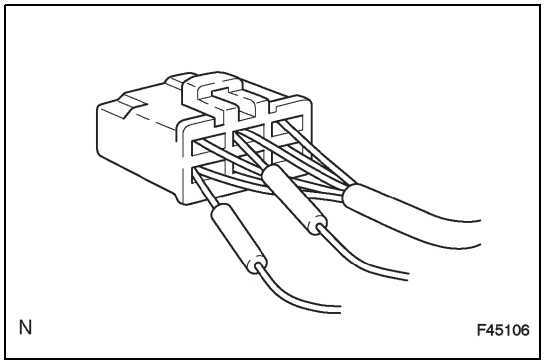

4. How to measure resistance
   (1) When measuring the resistance, insert the probes from the back side of the connector.

NW

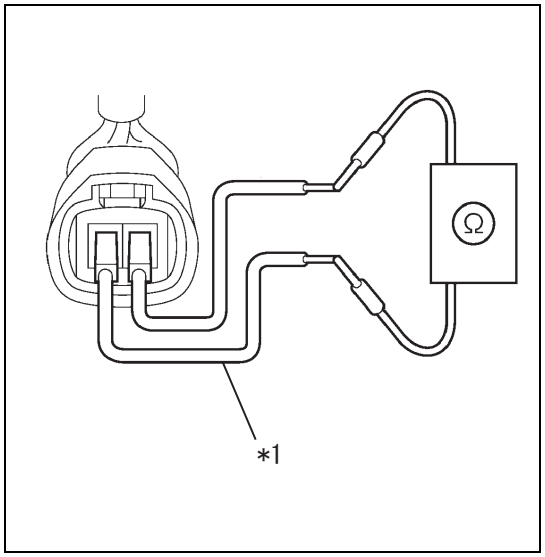

(2) If it cannot be inserted from the back side, use a repair wiring harness.

Captions in illustration

*1	Repair wiring harness

Parts location

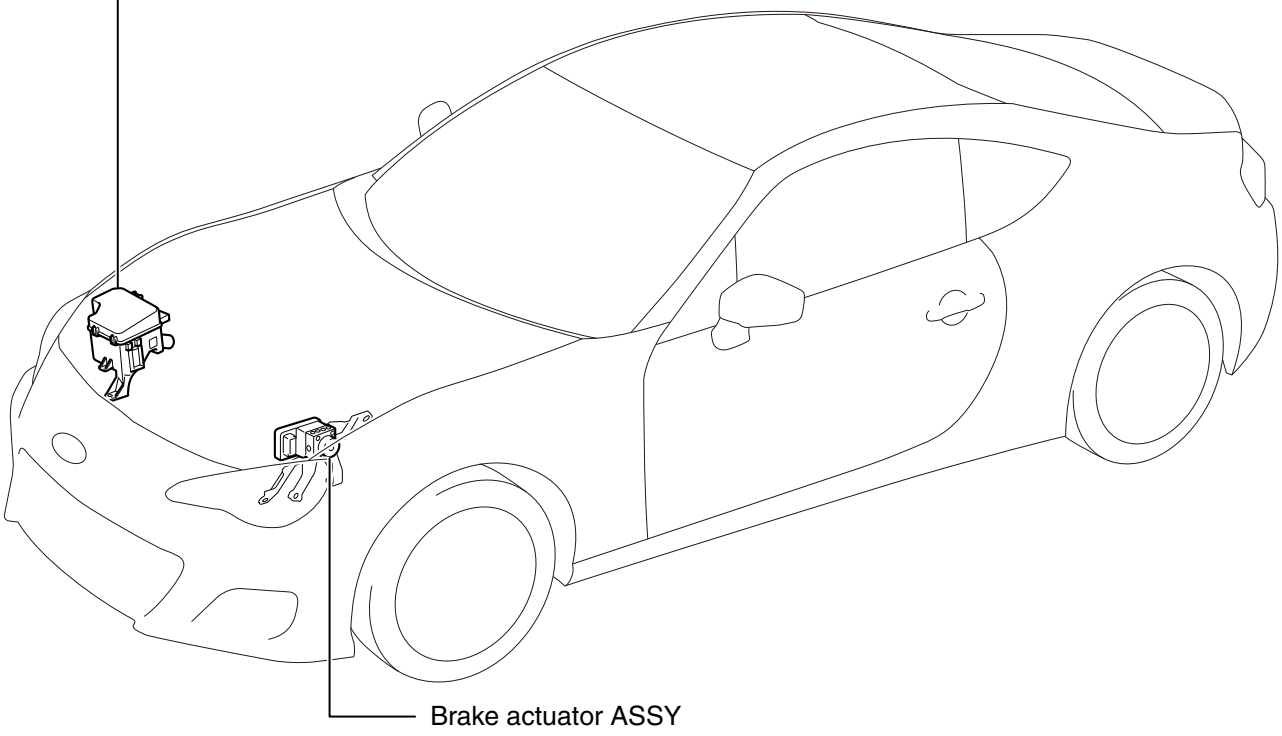

LAN01003

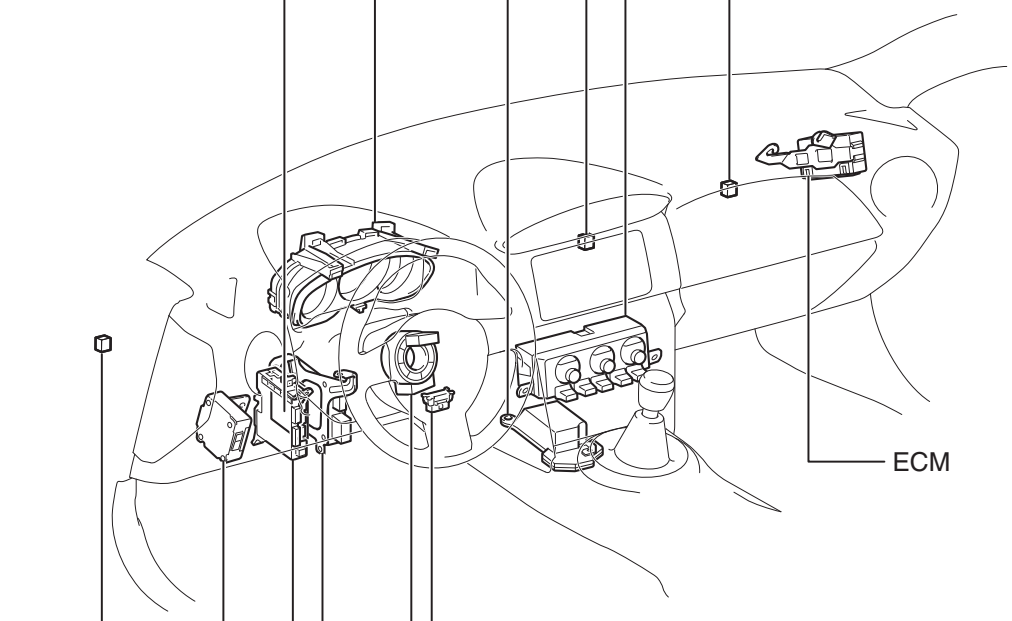

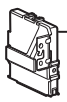

CERTIFICATION ECU (SMART KEY ECU ASSEMBLY)*3

REFER TO THE MANUAL "REGISTRATION MANUAL FOR IMMOBILIZER" FOR ATTACHMENT POSITION

*1 : for Automatic Air Conditioning System *3 : w/ Entry and Start System

*2 : for Automatic Transmission System

LAN01016

System description

1. Summary
   (1) CAN (Controller Area Network) is a serial communication network for real time applications. It is an on-vehicle multiplex communication line with high data transmission and error detection function.

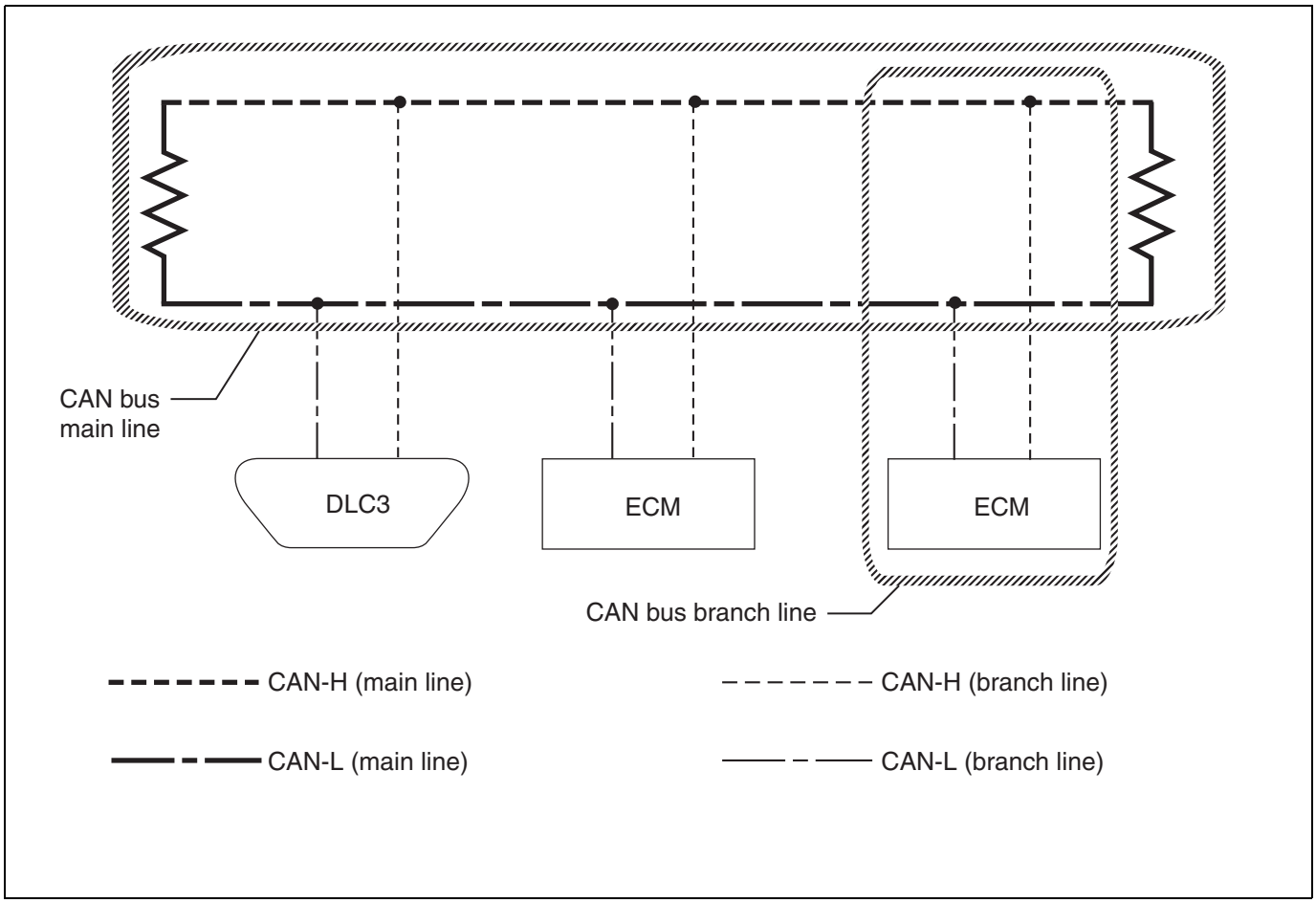

   (2) CAN communication uses differential voltage signals from a pair of lines: CAN-H and CAN-L (a base voltage is applied to generate potential difference for communication).
   (3) Many ECMs (sensors) are equipped onto a vehicle and each of them shares information and links with other ECMs (sensors) via CAN communication.
   (4) The main line has two resistors that are necessary for CAN communication.
2. Definitions of terms
   (1) Main line
      (a)Harness between the two termination circuits on the bus (communication line).
   (2) Sub-line
      (a)A line branching from the CAN bus main line to an ECM or sensor.
   (3) Termination circuit
      (a)A circuit, composed of resistor and capacitor, converts the line current to bus voltage. Two termination circuits - one at each end of the main bus line are required.
   (4) CAN J/C
      (a)J/C for CAN communication.
3. Circuit description
   (1) The circuit is configured based on Vbus. (For circuit connection, refer to NW - 65)
   (2) Each termination circuit on CAN bus has a 120 Ωresistor.

How to troubleshoot

1. Guidelines

CAUTION:

- If DTC of CAN communication system is output, always start the troubleshooting according to the procedure described in "How to troubleshoot".
- When a connector is not fully connected, it may case CAN communication failure. To avoid such failure, make sure to perform contact pressure test. (Refer to IN - 36)
- Before measuring the resistance of CAN bus, turn the ignition OFF and leave the vehicle as is for at least one minute without operating keys, switches, and doors. Disconnect the battery and wait for another one minute or more.
- After turning the ignition switch to OFF, you may have to wait for a while before disconnecting the battery terminals. Check appropriate precautions for battery terminal disconnection before proceeding. (Refer to IN - 6)

(1) CAN communication error codes are generated due to errors in the main and sub-lines, ECM in the CAN communication system, sensor internal error, and power supply system error. Since both internal and power supply system errors can occur at the same time, make sure to identify the error source properly.

(2) When the data link connector sub-line or Vbus main line seems to be defective, use an electrical tester to check the data link connector terminals.

CAUTION:

- In checking the data link connector, use SST (diagnosis check wire No. 2), instead of directly connecting the tester probe to the terminal.
- The electrical tester cannot support the open circuit check for the sub-line in each ECM and sensor from data link connector.

(3) In case there was a Vbus communication malfunction, identify the ECM and sensor which had lost communication based on the combination of communication error DTCs.

(4) In case an open circuit is detected, check for a loose or unplugged connection by pushing back the connector case before disconnecting connectors for checking.

(5) After disconnecting the connector, make sure that its terminal and the case have no damage, deformation, or corrosion.

1	Bring in the car

NOTE:

- If the ignition can be turned ON, check DTC, illumination status of combination meter waning light, and vehicle operation status immediately. (Example: Air conditioner operation status)
- Since the failsafe function is partially disabled with IG OFF, do not turn the ignition OFF until the checking is complete.
- If the ignition cannot be turned ON, measure the battery voltage. If the voltage is less than 11 V, charge or replace the battery and start the troubleshooting.
- If the battery voltage is normal and the ignition cannot be turned ON, repair defective parts as required before troubleshooting.

Next

2	Interview and phenomenon check

NOTE:

- In order to identify the trouble phenomenon correctly and make an appropriate decision, it is important not to introduce any bias into the troubleshooting process. To understand the circumstances of the failure for proper assessment, the interview with the user plays an important role in the troubleshooting.
- Ask the user if any add-on accessory (anti-theft system, monitor, and so on) is or was installed. (if installed, inform the user that it needs to be removed to check the trouble phenomenon accurately)

(1) Information about the status and condition of the vehicle at the time of trouble is helpful in identifying the defective parts.

NOTE:
- What (system, part, meter warning light)
- How (details of the defect)
- When (date and time, frequency, repeatability)
- Conditions (driving condition, operation condition, weather)
- Road type (inner city, suburbs, paved road, unpaved road, highway, etc.)
- Conditions for recovery (how to recover the error. For example, IG OFF)

Check list

Phenomenon	• Electric power steering effort is: - Normal - A bit heavy - Assist is not working • Air Conditioner - Was the air conditioner working? - Blower fan is working or not • Multi information display: - Each display is updated or not • Smart function: - Does lock or unlock occur? - Does the illumination come on within the smart detection area? • Other findings related to system operation
Meter warning light	• Warning light status, illuminating order - Slip indicator light ON - ABS warning light ON - Check engine warning light ON - Brake warning light ON - Airbag warning light ON - Others • Meter display - Shift indicator - Speedmeter - Tachometer (0 r/min fixed?) - Engine coolant temperature gauge (fixed to COLD lower limit?)

NW

Next

3	Basic inspection (CAN diagnostic is not used)

(1) Check components which may cause CAN communication error. (Refer to NW - 33)

NG → Repair or replace each component.

OK

4	Checking of communication for initializing.

(1) Communicate with the all systems by connecting SSM4.

Criteria: The communication for initializing is successful for each system. (NG if the communication for initializing is not successful for any of the systems)

NG → Perform the inspection using "Check sheet of communication for initializing". (Refer to NW - 33)

OK

5	Basic inspection (CAN diagnostic is used)

(1) Check components which may cause CAN communication error. (Refer to NW - 33)

NG → Repair or replace each component.

OK

NW

6	DTC check

(1) Start the engine and read all DTCs.
NOTE:
When the engine does not start, perform the diagnosis for the engine start malfunction.
(2) Record all DTCs and freeze frame data.

Result	Go to
DTC U**** is displayed	A
DTC U**** is not displayed	B

B → Go to Step 8

A

7	DTC check

(1) Perform the inspection using DTC check sheet.
(2) Use SSM4 to read all DTCs.

Result	Go to
DTC U**** is displayed	B
DTC U**** is not displayed	A

B → Go to Step 9

A

8	General diagnostics

(1) Inspect using the "General Diagnostics Table". (Refer to NW - 162)

OK → LAN system is normal

NG

9	Implementation of diagnosis

(1) Repair the trouble cause.

(2) Perform the clear memory mode.
(3) Read the DTC.

Result	Go to
DTC is displayed	B
DTC is not displayed	A

B → Repeat Step 9 until DTC is not shown.

A

Complete

Basic inspection

1. Inspection without using CAN diagnostic
   Before performing diagnostics, confirm the followings which may cause a defect in the body integrated unit.
   (1) Measure the battery voltage and check electrolyte.
   Standard voltage: 12 V or more
   Specific gravity: 1.260 or more
   (2) Check the fuse condition.
   Make sure that the fuse with specified ampere rating is used and it is not blown out.
   (3) Check the connecting condition of harness and harness connector.
   (4) Confirm key illumination does not blink with ignition switch turned ON.
2. Inspection using CAN diagnostic
   Before performing diagnostics, confirm the followings which may cause a defect in the body integrated unit.
   (1) If the body integrated unit has any settings inconsistent with the vehicle equipment.
   (2) If the body integrated unit has any settings inconsistent with the vehicle equipment due to customization.

Check using "Check sheet of communication for initializing"

- Network diagram

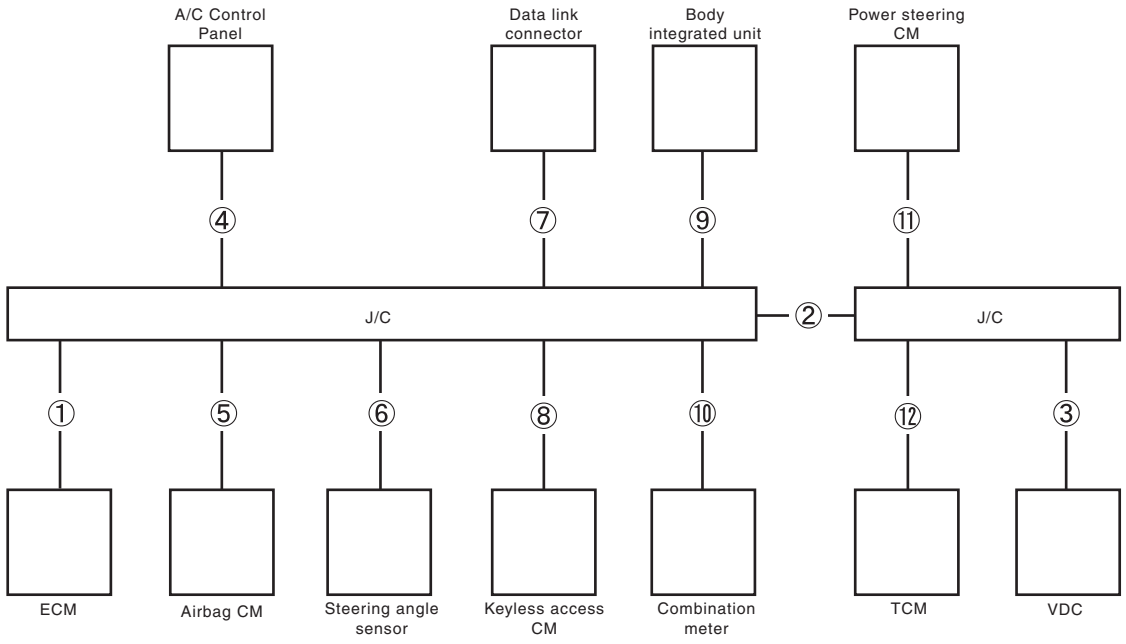

LAN01017

Wiring location	Type	Part	CANH	CANL
No.1	Main line	ECM vicinity	D43-9-A33-19	D43-20-A33-18
No.2	Main line	J/C1-J/C2	D43-1-A17-7	D43-12-A17-18
No.3	Main line	VDCCM vicinity	A17-6-A5-26	A17-17-A5-14
No.4	Sub-line	A/C CM vicinity	D43-10-D19-13	D43-21-D19-12
No.5	Sub-line	Airbag CM vicinity	D43-8-D27-13	D43-19-D27-22
No.6	Sub-line	Steering angle sensor vicinity	D43-6-D56-3	D43-17-D56-2
No.7	Sub-line	Data link connector vicinity	D43-5-D10-6	D43-16-D10-14
No.8	Sub-line	Keyless access CM	D43-4-D41-14	D43-15-D41-15
No.9	Sub-line	Body integrated unit	D43-3-D5-14	D43-14-D5-13
No.10	Sub-line	Combination meter vicinity	D43-2-D7-6	D43-13-D7-7
No.11	Sub-line	Power steering CM vicinity	A17-8-A15-1	A17-19-A15-7
No.12	Sub-line	TCM vicinity	A17-5-A18-29	A17-16-A18-28

- Check sheet of communication for initializing

	(A)	(B)	(C)											
			①	②	③	④	⑤	⑥	⑦	⑧	⑨	⑩	⑪	⑫
								—						
ECU				—	—	—	—	—		—	—	—	—	—
A/C			—	—	—		—	—		—	—	—	—	—
A/B			—	—	—	—		—		—	—	—	—	—
STR		—	—	—	—	—	—	—	—	—	—	—	—	—
KPS			—	—	—	—	—	—			—	—	—	—
BIU			—	—	—	—	—	—		—		—	—	—
MET			—	—	—	—	—	—		—	—		—	—
EPS			—		—	—	—	—		—	—	—		—
TCU			—		—	—	—	—		—	—	—	—	
VDC			—			—	—	—		—	—	—	—	—

LAN01018

Captions in illustration

(A)	Installation check	VDC	Brake actuator ASSY	A/B	Airbag CM
(B)	Communication initialization	MET	Combination meter ASSY	A/C	Air conditioner amplifier ASSY
(C)	Wiring location	BIU	Body integrated unit	TCU	Transmission control computer ASSY
		KPS	Collation ECM (Smart key computer ASSY)	EPS	Power steering computer ASSY
		STR	Spiral cable SUB-ASSY	ECU	Engine control computer

Procedure

1. Module installation check
   (a) Put "-" mark in the box under the installation check column if the vehicle to be inspected does not have the relevant module.
   (b) Put "-" marks in all blank boxes in the same row that the "-" mark has been placed.
   NOTE:
   Refer to the sample list.
2. SSM communication initialization check
   (a) Put "0" mark in the box under the communication initialization column if the module succeeded in the communication initialization with Select Monitor. If the communication with all of the modules subject to CAN diagnostic fails, go to (c).
   (b) Put "0" marks in all blank boxes in the same row that the "0" mark has been placed.
   (c) If a wiring location column has one or more boxes with "0" mark, the wiring for that location is normal. Put "0" mark in the box directly under the column with circled number. Put " " marks in the blank boxes under the column.
   (d) Perform open circuit check for the wiring locations without "0" mark in ascending order. (only for installed modules)
   (e) If the communication remains disabled after checking all harnesses, inspect the module power supply line.
   (f) If the power supply line is normal, perform the basic diagnosis procedure for the corresponding system.
   (g) If the communication remains disabled after implementing the basic diagnostic program, replace the unit.
   NOTE:
   - Refer to the sample list.
   - For the wiring locations marked with "-", they cannot be inspected using the communication for initialization via Select Monitor.

   Identify the faulty part by using example of missing DTC detection.

3. SSM communication initialization check (impossible to communicate with any module)
   NOTE:
   Perform inspection procedure for the trouble mode indicating that all CAN modules do not communicate. If the communication with any of the modules has been recovered, go to “2. SSM communication initialization check”.
   (a) Check for the short circuit to ground. (Refer to NW - 128)
      If it is normal, go to the next.
   (b) Check for the short circuit to battery. (Refer to NW - 121)
      If it is normal, go to the next.
   (c) Perform the inspection procedure for the resistance of Less than 57 Ω(line-to-line short). (Refer to NW - 113)
      If it is normal, go to the next.
   (d) Check for the open circuit of network diagram No. 7 (data link connector).

Examples: Check sheet of communication for initializing

No.1 is open

	(A)	(B)	(C)											
			①	②	③	④	⑤	⑥	⑦	⑧	⑨	⑩	⑪	⑫
				○	○	○	○	—	○	○	○	○	○	○
ECU	○	×		—	—	—	—	—	○	—	—	—	—	—
A/C	○	○	—	—	—	○	—	—	○	—	—	—	—	—
A/B	○	○	—	—	—	—	○	—	○	—	—	—	—	—
STR	○	—	—	—	—	—	—	—	—	—	—	—	—	—
KPS	○	○	—	—	—	—	—	—	○	○	—	—	—	—
BIU	○	○	—	—	—	—	—	—	○	—	○	—	—	—
MET	○	○	—	—	—	—	—	—	○	—	—	○	—	—
EPS	○	○	—	○	—	—	—	—	○	—	—	—	○	—
TCU	○	○	—	○	—	—	—	—	○	—	—	—	—	○
VDC	○	○	—	○	○	—	—	—	○	—	—	—	—	—

LAN01019

No. 2 is open

	(A)	(B)	(C)											
			①	②	③	④	⑤	⑥	⑦	⑧	⑨	⑩	⑪	⑫
			○			○	○	—	○	○	○	○		
ECU	○	○	○	—	—	—	—	—	○	—	—	—	—	—
A/C	○	○	—	—	—	○	—	—	○	—	—	—	—	—
A/B	○	○	—	—	—	—	○	—	○	—	—	—	—	—
STR	○	—	—	—	—	—	—	—	—	—	—	—	—	—
KPS	○	○	—	—	—	—	—	—	○	○	—	—	—	—
BIU	○	○	—	—	—	—	—	—	○	—	○	—	—	—
MET	○	○	—	—	—	—	—	—	○	—	—	○	—	—
EPS	○	×	—		—	—	—	—	○	—	—	—		—
TCU	○	×	—		—	—	—	—	○	—	—	—	—	
VDC	○	×	—			—	—	—	○	—	—	—	—	—

LAN01020

No. 3 is open

	(A)	(B)	(C)											
			①	②	③	④	⑤	⑥	⑦	⑧	⑨	⑩	⑪	⑫
			○	○		○	○	—	○	○	○	○	○	○
ECU	○	○	○	—	—	—	—	—	○	—	—	—	—	—
A/C	○	○	—	—	—	○	—	—	○	—	—	—	—	—
A/B	○	○	—	—	—	—	○	—	○	—	—	—	—	—
STR	○	—	—	—	—	—	—	—	—	—	—	—	—	—
KPS	○	○	—	—	—	—	—	—	○	○	—	—	—	—
BIU	○	○	—	—	—	—	—	—	○	—	○	—	—	—
MET	○	○	—	—	—	—	—	—	○	—	—	○	—	—
EPS	○	○	—	○	—	—	—	—	○	—	—	—	○	—
TCU	○	○	—	○	—	—	—	—	○	—	—	—	—	○
VDC	○	×	—	○		—	—	—	○	—	—	—	—	—

LAN01021

NW

No. 4 is open

	(A)	(B)	(C)											
			①	②	③	④	⑤	⑥	⑦	⑧	⑨	⑩	⑪	⑫
			○	○	○		○	—	○	○	○	○	○	○
ECU	○	○	○	—	—	—	—	—	○	—	—	—	—	—
A/C	○	×	—	—	—		—	—	○	—	—	—	—	—
A/B	○	○	—	—	—	—	○	—	○	—	—	—	—	—
STR	○	—	—	—	—	—	—	—	—	—	—	—	—	—
KPS	○	○	—	—	—	—	—	—	○	○	—	—	—	—
BIU	○	○	—	—	—	—	—	—	○	—	○	—	—	—
MET	○	○	—	—	—	—	—	—	○	—	—	○	—	—
EPS	○	○	—	○	—	—	—	—	○	—	—	—	○	—
TCU	○	○	—	○	—	—	—	—	○	—	—	—	—	○
VDC	○	○	—	○	○	—	—	—	○	—	—	—	—	—

LAN01022

No. 5 is open

	(A)	(B)	(C)											
			①	②	③	④	⑤	⑥	⑦	⑧	⑨	⑩	⑪	⑫
			○	○	○	○		—	○	○	○	○	○	○
ECU	○	○	○	—	—	—	—	—	○	—	—	—	—	—
A/C	○	○	—	—	—	○	—	—	○	—	—	—	—	—
A/B	○	×	—	—	—	—		—	○	—	—	—	—	—
STR	○	—	—	—	—	—	—	—	—	—	—	—	—	—
KPS	○	○	—	—	—	—	—	—	○	○	—	—	—	—
BIU	○	○	—	—	—	—	—	—	○	—	○	—	—	—
MET	○	○	—	—	—	—	—	—	○	—	—	○	—	—
EPS	○	○	—	○	—	—	—	—	○	—	—	—	○	—
TCU	○	○	—	○	—	—	—	—	○	—	—	—	—	○
VDC	○	○	—	○	○	—	—	—	○	—	—	—	—	—

LAN01023

No. 6 is open

NOTE:

This defect can be detected based on the missing data detection condition for each module (refer to example of missing DTC detection)

NW

	(A)	(B)	(C)											
			①	②	③	④	⑤	⑥	⑦	⑧	⑨	⑩	⑪	⑫
			○	○	○	○	○	—	○	○	○	○	○	○
ECU	○	○	○	—	—	—	—	—	○	—	—	—	—	—
A/C	○	○	—	—	—	○	—	—	○	—	—	—	—	—
A/B	○	○	—	—	—	—	○	—	○	—	—	—	—	—
STR	○	—	—	—	—	—	—	—	—	—	—	—	—	—
KPS	○	○	—	—	—	—	—	—	○	○	—	—	—	—
BIU	○	○	—	—	—	—	—	—	○	—	○	—	—	—
MET	○	○	—	—	—	—	—	—	○	—	—	○	—	—
EPS	○	○	—	○	—	—	—	—	○	—	—	—	○	—
TCU	○	○	—	○	—	—	—	—	○	—	—	—	—	○
VDC	○	○	—	○	○	—	—	—	○	—	—	—	—	—

LAN01024

No. 7 is open

NOTE:

Perform the procedure described in "3. SSM communication initialization check (impossible to communicate with any module)".

	(A)	(B)	(C)											
			①	②	③	④	⑤	⑥	⑦	⑧	⑨	⑩	⑪	⑫
								—						
ECU	○	×		—	—	—	—	—		—	—	—	—	—
A/C	○	×	—	—	—		—	—		—	—	—	—	—
A/B	○	×	—	—	—	—		—		—	—	—	—	—
STR	○	—	—	—	—	—	—	—	—	—	—	—	—	—
KPS	○	×	—	—	—	—	—	—			—	—	—	—
BIU	○	×	—	—	—	—	—	—		—		—	—	—
MET	○	×	—	—	—	—	—	—		—	—		—	—
EPS	○	×	—		—	—	—	—		—	—	—		—
TCU	○	×	—		—	—	—	—		—	—	—	—	
VDC	○	×	—			—	—	—		—	—	—	—	—

LAN01025

No. 8 is open

	(A)	(B)	(C)											
			①	②	③	④	⑤	⑥	⑦	⑧	⑨	⑩	⑪	⑫
			○	○	○	○	○	—	○		○	○	○	○
ECU	○	○	○	—	—	—	—	—	○	—	—	—	—	—
A/C	○	○	—	—	—	○	—	—	○	—	—	—	—	—
A/B	○	○	—	—	—	—	○	—	○	—	—	—	—	—
STR	○	—	—	—	—	—	—	—	—	—	—	—	—	—
KPS	○	×	—	—	—	—	—	—	○		—	—	—	—
BIU	○	○	—	—	—	—	—	—	○	—	○	—	—	—
MET	○	○	—	—	—	—	—	—	○	—	—	○	—	—
EPS	○	○	—	○	—	—	—	—	○	—	—	—	○	—
TCU	○	○	—	○	—	—	—	—	○	—	—	—	—	○
VDC	○	○	—	○	○	—	—	—	○	—	—	—	—	—

LAN01026

No. 9 is open

	(A)	(B)	(C)											
			①	②	③	④	⑤	⑥	⑦	⑧	⑨	⑩	⑪	⑫
			○	○	○	○	○	—	○	○		○	○	○
ECU	○	○	○	—	—	—	—	—	○	—	—	—	—	—
A/C	○	○	—	—	—	○	—	—	○	—	—	—	—	—
A/B	○	○	—	—	—	—	○	—	○	—	—	—	—	—
STR	○	—	—	—	—	—	—	—	—	—	—	—	—	—
KPS	○	○	—	—	—	—	—	—	○	○	—	—	—	—
BIU	○	×	—	—	—	—	—	—	○	—		—	—	—
MET	○	○	—	—	—	—	—	—	○	—	—	○	—	—
EPS	○	○	—	○	—	—	—	—	○	—	—	—	○	—
TCU	○	○	—	○	—	—	—	—	○	—	—	—	—	○
VDC	○	○	—	○	○	—	—	—	○	—	—	—	—	—

LAN01027

No. 10 is open

	(A)	(B)	(C)											
			①	②	③	④	⑤	⑥	⑦	⑧	⑨	⑩	⑪	⑫
			○	○	○	○	○	—	○	○	○		○	○
ECU	○	○	○	—	—	—	—	—	○	—	—	—	—	—
A/C	○	○	—	—	—	○	—	—	○	—	—	—	—	—
A/B	○	○	—	—	—	—	○	—	○	—	—	—	—	—
STR	○	—	—	—	—	—	—	—	—	—	—	—	—	—
KPS	○	○	—	—	—	—	—	—	○	○	—	—	—	—
BIU	○	○	—	—	—	—	—	—	○	—	○	—	—	—
MET	○	×	—	—	—	—	—	—	○	—	—		—	—
EPS	○	○	—	○	—	—	—	—	○	—	—	—	○	—
TCU	○	○	—	○	—	—	—	—	○	—	—	—	—	○
VDC	○	○	—	○	○	—	—	—	○	—	—	—	—	—

LAN01028

No. 11 is open

	(A)	(B)	(C)											
			①	②	③	④	⑤	⑥	⑦	⑧	⑨	⑩	⑪	⑫
			○	○	○	○	○	—	○	○	○	○		○
ECU	○	○	○	—	—	—	—	—	○	—	—	—	—	—
A/C	○	○	—	—	—	○	—	—	○	—	—	—	—	—
A/B	○	○	—	—	—	—	○	—	○	—	—	—	—	—
STR	○	—	—	—	—	—	—	—	—	—	—	—	—	—
KPS	○	○	—	—	—	—	—	—	○	○	—	—	—	—
BIU	○	○	—	—	—	—	—	—	○	—	○	—	—	—
MET	○	○	—	—	—	—	—	—	○	—	—	○	—	—
EPS	○	×	—	○	—	—	—	—	○	—	—	—		—
TCU	○	○	—	○	—	—	—	—	○	—	—	—	—	○
VDC	○	○	—	○	○	—	—	—	○	—	—	—	—	—

LAN01029

No. 12 is open

	(A)	(B)	(C)											
			①	②	③	④	⑤	⑥	⑦	⑧	⑨	⑩	⑪	⑫
			○	○	○	○	○	—	○	○	○	○	○	
ECU	○	○	○	—	—	—	—	—	○	—	—	—	—	—
A/C	○	○	—	—	—	○	—	—	○	—	—	—	—	—
A/B	○	○	—	—	—	—	○	—	○	—	—	—	—	—
STR	○	—	—	—	—	—	—	—	—	—	—	—	—	—
KPS	○	○	—	—	—	—	—	—	○	○	—	—	—	—
BIU	○	○	—	—	—	—	—	—	○	—	○	—	—	—
MET	○	○	—	—	—	—	—	—	○	—	—	○	—	—
EPS	○	○	—	○	—	—	—	—	○	—	—	—	○	—
TCU	○	×	—	○	—	—	—	—	○	—	—	—	—	
VDC	○	○	—	○	○	—	—	—	○	—	—	—	—	—

LAN01030

Checking CAN communication circuit

1. Inspection steps

CAUTION:

- Before measuring the resistance of CAN bus, turn the ignition OFF and leave the vehicle as is for at least one minute without operating keys, switches, and doors. Disconnect the battery and wait for another one minute or more.
- When a connector is not fully connected, it may case CAN communication failure. To avoid such failure, make sure to perform contact pressure test.

1	Bring in the car

*1

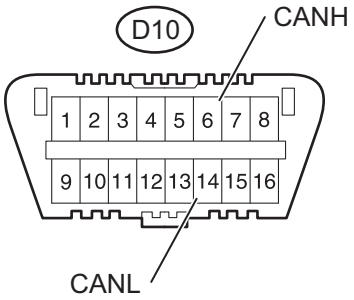

(1) Use the tester to measure the resistance between terminals.

Resistance

Inspection terminals	Inspection conditions	Standard value
D10-6 - chassis ground	Always	10Ω or more
D10-14 - chassis ground	Always	10Ω or more

Captions in illustration

*1	Data link connector

NG → Check for ground short. (Refer to NW - 128)

OK

2	Checking from data link connector

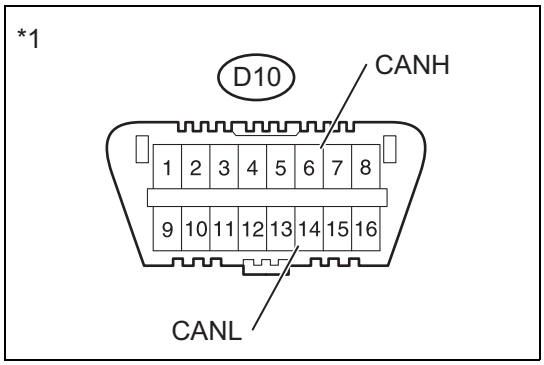

(1) Use the tester to measure the voltage between terminals.
Voltage

Inspection terminals	Inspection conditions	Standard value
D10-6 - chassis ground	Always	Less than 5 V
D10-14 - chassis ground	Always	Less than 5 V

Captions in illustration

*1	Data link connector

NG → Check for short circuit in the battery (Refer to NW - 121)

OK

3	Checking from data link connector

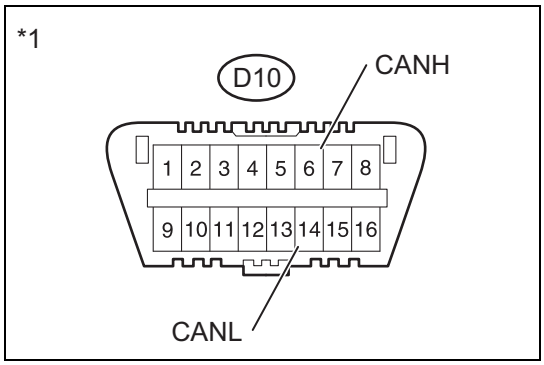

(1) Use the tester to measure the resistance between terminals.
Resistance

Inspection terminals	Inspection conditions	Standard value
D10-6 - D10-14	Always	57 to 63 Ω

Captions in illustration

*1	Data link connector

Criteria

Result	Go to
OK (57 to 63 Ω)	A
NG (exceeding 63 Ω)	B
NG (less than 57 Ω)	C

A → A sub-line may be open. Perform the inspection for the resistance between the sub-lines relevant to the detected DTC. (Refer to 2. list)

B → Perform the inspection for the resistance of more than 63 Ω. (Refer to NW - 108)

C → Perform the inspection for the resistance of Less than 57 Ω. (Refer to NW - 113)

2. List

Item	Contents	Note
Check for short to ground	Refer to "Check for short to ground". (Refer to NW - 128)	Shorted to ground in the communication circuit or control module.
Check for short to battery	Refer to "Check for short to battery". (Refer to NW - 121)	Shorted to battery power supply system in the communication circuit or control module.
Less than 57 Ω	Refer to the inspection for the resistance of less than 57 Ω. (Refer to NW - 113)	CAN-H and CAN-L may be shorted on CAN communication circuit, where the resistance is lower than combined resistance of the terminal resistor.

Item	Contents	Note
Exceeding 63 Ω	Refer to the inspection for the resistance of more than 63 Ω. (Refer to NW - 108)	CAN communication circuit may be open on CAN communication circuit, where the resistance is higher than combined resistance of the terminal resistor.
Sub-lines 57-63 Ω(Engine control computer system)	Refer to the inspection for the sub-lines 57-63 Ω(Engine control computer system). (Refer to NW - 90)	The inspection is applied in case of missing or invalid data for the engine control computer.
Sub-lines 57-63 Ω(Brake actuator ASSY system)	Refer to the inspection for the sub-lines 57-63 Ω(Brake actuator ASSY system). (Refer to NW - 85)	The inspection is applied in case of missing or invalid data for the brake actuator ASSY.
Sub-lines 57-63 Ω(Transmission control computer ASSY system)	Refer to the inspection for the sub-lines 57-63 Ω(Transmission control computer ASSY system). (Refer to NW - 82)	The inspection is applied in case of missing or invalid data for the transmission control computer ASSY.
Sub-lines 57-63 Ω(Body integrated unit system)	Refer to the inspection for the sub-lines 57-63 Ω(Body integrated unit system). (Refer to NW - 104)	The inspection is applied in case of missing or invalid data for the body integrated unit.
Sub-lines 57-63 Ω(Spiral cable SUB-ASSY system)	Refer to the inspection for the sub-lines 57-63 Ω(Spiral cable SUB-ASSY system). (Refer to NW - 87)	The inspection is applied in case of missing or invalid data for the spiral cable SUB-ASSY.
Sub-lines 57-63 Ω(Air conditioner amplifier ASSY system)	Refer to the inspection for the sub-lines 57-63 Ω(A/C control panel system). (Refer to NW - 97)	The inspection is applied in case of missing or invalid data for A/C.
Sub-lines 57-63 Ω(Electric power steering computer ASSY system)	Refer to the inspection for the sub-lines 57-63 Ω(Electric power steering computer ASSY system). (Refer to NW - 94)	The inspection is applied in case of missing or invalid data for the electric power steering.
Sub-lines 57-63 Ω(Combination meter ASSY system)	Refer to the inspection for the sub-lines 57-63 Ω(Combination meter ASSY system). (Refer to NW - 100)	The inspection is applied in case of missing or invalid data for the meter.
Sub-lines 57-63 Ω(Airbag system)	Refer to the inspection for the sub-lines 57-63 Ω(A/B CM system). (Refer to NW - 91)	The inspection is applied in case of missing or invalid data for the airbag.
Sub-lines 57-63 Ω(Keyless access system)	Refer to the inspection for the sub-lines 57-63 Ω(Keyless access system). (Refer to NW - 102)	The inspection is applied in case of missing or invalid data for the collation ECM (Smart key computer ASSY).

NW

List of diagnostic codes

NOTE:

- SSM4 can be used to display DTC of CAN communication system by ECM.
- For DTCs related to CAN communication system, always start the troubleshooting according to the procedure described in "How to troubleshoot" because the cause cannot be identified only from DTC. (Refer to NW - 30)
- When the procedure described in "DTC check procedure" is followed, DTC will be displayed only if the error condition is still present.

1. Main body ECM (Multiplex network body computer) integrated unit mode (SSM4 display name)

DTC	Diagnostic items (SSM4 display name)	DTC detecting condition	DTC detecting conditions	DTC check procedure	Warning light	Retention of DTC
U0073	[CAN-HS bus off]	Communication is disabled due to high-speed CAN communication error	When all of the following conditions are met: • One or more second after IG ON • The voltage of the main body ECM (Multiplex network body computer) power supply is 10 V or more	Wait 15 seconds or more after IG ON	-	Retained until DTC is cleared by the tool
U0100	[CAN-HS ECM no-receive data]	Main body ECM (Multiplex network body computer) remains unable to receive data from the engine control computer.	When all of the following conditions are met: • One or more second after IG ON • The voltage of the main body ECM (Multiplex network body computer) power supply is 10 V or more	Wait 15 seconds or more after IG ON	-	Retained until DTC is cleared by the tool

DTC	Diagnostic items (SSM4 display name)	DTC detecting condition	DTC detecting conditions	DTC check procedure	Warning light	Retention of DTC
U0101	[CAN-HS TCM no-receive data]	Main body ECM (Multiplex network body computer) remains unable to receive data from the transmission control computer ASSY.	When all of the following conditions are met: • One or more second after IG ON • The voltage of the main body ECM (Multiplex network body computer) power supply is 10 V or more	Wait 15 seconds or more after IG ON	-	Retained until DTC is cleared by the tool
U0122	[CAN-HS VDC no-receive data]	Main body ECM (Multiplex network body computer) remains unable to receive data from the brake actuator ASSY.	When all of the following conditions are met: • One or more second after IG ON • The voltage of the main body ECM (Multiplex network body computer) power supply is 10 V or more	Wait 15 seconds or more after IG ON	-	Retained until DTC is cleared by the tool
U0155	[CAN-HS meter no-receive data]	Main body ECM (Multiplex network body computer) remains unable to receive data from the combination meter ASSY.	When all of the following conditions are met: • One or more second after IG ON • The voltage of the main body ECM (Multiplex network body computer) power supply is 10 V or more	Wait 15 seconds or more after IG ON	-	Retained until DTC is cleared by the tool
U0164	[CAN-HS A/C no-receive data]	Main body ECM (Multiplex network body computer) remains unable to receive data from the air conditioner amplifier ASSY.	When all of the following conditions are met: • One or more second after IG ON • The voltage of the main body ECM (Multiplex network body computer) power supply is 10 V or more	Wait 15 seconds or more after IG ON	-	Retained until DTC is cleared by the tool
U0327	[CAN-HS Collation no-receive data]	Main body ECM (Multiplex network body computer) remains unable to receive data from the collation ECM (Smart key computer ASSY).	When all of the following conditions are met: • One or more second after IG ON • The voltage of the main body ECM (Multiplex network body computer) power supply is 10 V or more	Wait 15 seconds or more after IG ON	-	Retained until DTC is cleared by the tool
U0401	[CAN-HS EGI data error]	Main body ECM (Multiplex network body computer) detects an error in the data received from the engine control computer	When all of the following conditions are met: • One or more second after IG ON • The voltage of the main body ECM (Multiplex network body computer) power supply is 10 V or more	Wait 15 seconds or more after IG ON	-	Retained until DTC is cleared by the tool
U0402	[CAN-HS TCU data error]	Main body ECM (Multiplex network body computer) detects an error in the data received from the transmission control computer ASSY	When all of the following conditions are met: • One or more second after IG ON • The voltage of the main body ECM (Multiplex network body computer) power supply is 10 V or more	Wait 15 seconds or more after IG ON	-	Retained until DTC is cleared by the tool

DTC	Diagnostic items (SSM4 display name)	DTC detecting condition	DTC detecting conditions	DTC check procedure	Warning light	Retention of DTC
U0416	[CAN-HS VDC data error]	Main body ECM (Multiplex network body computer) detects an error in the data received from the brake actuator ASSY	When all of the following conditions are met: • One or more second after IG ON • The voltage of the main body ECM (Multiplex network body computer) power supply is 10 V or more	Wait 15 seconds or more after IG ON	-	Retained until DTC is cleared by the tool
U0423	[CAN-HS meter unit data error]	Main body ECM (Multiplex network body computer) detects an error in the data received from the combination meter ASSY	When all of the following conditions are met: • One or more second after IG ON • The voltage of the main body ECM (Multiplex network body computer) power supply is 10 V or more	Wait 15 seconds or more after IG ON	-	Retained until DTC is cleared by the tool
U0424	[CAN-HS A/C data error]	Main body ECM (Multiplex network body computer) detects an error in the data received from the air conditioner amplifier ASSY	When all of the following conditions are met: • One or more second after IG ON • The voltage of the main body ECM (Multiplex network body computer) power supply is 10 V or more	Wait 15 seconds or more after IG ON	-	Retained until DTC is cleared by the tool
U1201	[CAN-HS counter abnormal]	Communication is unstable because of high-speed CAN communication error.	When all of the following conditions are met: • One or more second after IG ON • The voltage of the main body ECM (Multiplex network body computer) power supply is 10 V or more	Wait 15 seconds or more after IG ON	-	Retained until DTC is cleared by the tool

NOTE:
Diagnosis data is transmitted via CAN communication line.

2. Combination meter ASSY/Combination meter (SSM4 display name)

DTC	Diagnostic items (SSM4 display name)	DTC detecting condition	DTC detecting conditions	DTC check procedure	Warning light	Retention of DTC
U0073	- (Bus off)	Communication is disabled due to high-speed CAN communication error	When all of the following conditions are met: • One or more second after IG ON • The voltage of the combination meter ASSY power supply is 10 V or more	Wait 10 seconds or more after IG ON	-	Retained until DTC is cleared by the tool
U0100	[Lost Communication With ECM/PCM "A"]	Combination meter ASSY remains unable to receive data from the engine control computer	When all of the following conditions are met: • One or more second after IG ON • The voltage of the combination meter ASSY power supply is 10 V or more	Wait 10 seconds or more after IG ON	-	Retained until DTC is cleared by the tool
U0122	[Lost Communication With Vehicle Dynamics Control Module]	Combination meter ASSY remains unable to receive data from the brake actuator ASSY	When all of the following conditions are met: • One or more second after IG ON • The voltage of the combination meter ASSY power supply is 10 V or more	Wait 10 seconds or more after IG ON	-	Retained until DTC is cleared by the tool

DTC	Diagnostic items (SSM4 display name)	DTC detecting condition	DTC detecting conditions	DTC check procedure	Warning light	Retention of DTC
U0131	[Lost Communication with Power Steering Control Module]	Combination meter ASSY remains unable to receive data from the power steering computer ASSY	When all of the following conditions are met: • One or more second after IG ON • The voltage of the combination meter ASSY power supply is 10 V or more	Wait 10 seconds or more after IG ON	-	Retained until DTC is cleared by the tool
U0140	[Lost Communication With Body Control Module]	Combination meter ASSY remains unable to receive data from the main body ECM (Multiplex network body computer)	When all of the following conditions are met: • One or more second after IG ON • The voltage of the combination meter ASSY power supply is 10 V or more	Wait 10 seconds or more after IG ON	-	Retained until DTC is cleared by the tool
U0151	[Lost Communication With Restraints Control Module]	Combination meter ASSY remains unable to receive data from the airbag sensor ASSY	When all of the following conditions are met: • One or more second after IG ON • The voltage of the combination meter ASSY power supply is 10 V or more	Wait 10 seconds or more after IG ON	-	Retained until DTC is cleared by the tool

NW

NOTE:

Diagnosis data is transmitted via CAN communication line.

3. Collation ECM (Smart key computer ASSY)/Keyless access system (SSM4 display name)

DTC	Diagnostic items (SSM4 display name)	DTC detecting condition	DTC detecting conditions	DTC check procedure	Warning light	Retention of DTC
U0073	[Control Module Communication Bus "A" Off]	Communication is disabled due to high-speed CAN communication error	When all of the following conditions are met: • One or more second after IG ON • The voltage of the collation ECM (Smart key computer ASSY) power supply is 10 V or more	Wait 10 seconds or more after IG ON	-	Retained until DTC is cleared by the tool
U0100	[Lost Communication With ECM/PCM "A"]	Collation ECM (Smart key computer ASSY) remains unable to receive data from the engine control computer	When all of the following conditions are met: • One or more second after IG ON • The voltage of the collation ECM (Smart key computer ASSY) power supply is 10 V or more	Wait 10 seconds or more after IG ON	-	Retained until DTC is cleared by the tool
U0101	[Lost Communication With TCM]	Collation ECM (Smart key computer ASSY) remains unable to receive data from the transmission control computer ASSY	When all of the following conditions are met: • One or more second after IG ON • The voltage of the collation ECM (Smart key computer ASSY) power supply is 10 V or more	Wait 10 seconds or more after IG ON	-	Retained until DTC is cleared by the tool
U0122	[Lost Communication With Vehicle Dynamics Control Module]	Collation ECM (Smart key computer ASSY) remains unable to receive data from the brake actuator ASSY	When all of the following conditions are met: • One or more second after IG ON • The voltage of the collation ECM (Smart key computer ASSY) power supply is 10 V or more	Wait 10 seconds or more after IG ON	-	Retained until DTC is cleared by the tool

DTC	Diagnostic items (SSM4 display name)	DTC detecting condition	DTC detecting conditions	DTC check procedure	Warning light	Retention of DTC
U0140	[Lost Communication With Body Control Module]	Collation ECM (Smart key computer ASSY) remains unable to receive data from the main body ECM (Multiplex network body computer)	When all of the following conditions are met: • One or more second after IG ON • The voltage of the collation ECM (Smart key computer ASSY) power supply is 10 V or more	Wait 10 seconds or more after IG ON	-	Retained until DTC is cleared by the tool
U0155	[Lost Communication With Instrument Panel Cluster (IPC) Control Module]	Collation ECM (Smart key computer ASSY) remains unable to receive data from the combination meter ASSY	When all of the following conditions are met: • One or more second after IG ON • The voltage of the collation ECM (Smart key computer ASSY) power supply is 10 V or more	Wait 10 seconds or more after IG ON	-	Retained until DTC is cleared by the tool
U0401	[Invalid Data Received From ECM/PCM "A"]	Collation ECM (Smart key computer ASSY) detects an error in the data received from the engine control computer	When all of the following conditions are met: • One or more second after IG ON • The voltage of the collation ECM (Smart key computer ASSY) power supply is 10 V or more	Wait 10 seconds or more after IG ON	-	Retained until DTC is cleared by the tool
U0422	[Invalid Data Received From Body Control Module]	Collation ECM (Smart key computer ASSY) detects an error in the data received from the main body ECM (Multiplex network body computer)	When all of the following conditions are met: • One or more second after IG ON • The voltage of the collation ECM (Smart key computer ASSY) power supply is 10 V or more	Wait 10 seconds or more after IG ON	-	Retained until DTC is cleared by the tool

* Error is detected with IG ON.

NOTE:

Diagnosis data is transmitted via CAN communication line.

4. Engine control computer/Engine (SSM4 display name)

DTC	Diagnostic items (SSM4 display name)	DTC detecting condition	DTC detecting conditions	DTC check procedure	Warning light	Retention of DTC
U0073	[Control Module Communication Bus "A" Off]	Communication is disabled due to high-speed CAN communication error	When all of the following conditions are met: • One or more second after IG ON • The voltage of the engine control computer power supply is 10 V or more	Wait 10 seconds or more after IG ON	Check engine light is ON	Retained until DTC is cleared by the tool
U0101	[Lost Communication With TCM]	Engine control computer remains unable to receive data from the transmission control computer ASSY	When all of the following conditions are met: • One or more second after IG ON • The voltage of the engine control computer power supply is 10 V or more	Wait 10 seconds or more after IG ON	Check engine light is ON	Retained until DTC is cleared by the tool
U0122	[Lost Communication With Vehicle Dynamics Control Module]	Engine control computer remains unable to receive data from the brake actuator ASSY	When all of the following conditions are met: • One or more second after IG ON • The voltage of the engine control computer power supply is 10 V or more	Wait 10 seconds or more after IG ON	Check engine light is ON	Retained until DTC is cleared by the tool

DTC	Diagnostic items (SSM4 display name)	DTC detecting condition	DTC detecting conditions	DTC check procedure	Warning light	Retention of DTC
U0155	[Lost Communication With Instrument Panel Cluster (IPC) Control Module]	Engine control computer remains unable to receive data from the combination meter ASSY	When all of the following conditions are met: • One or more second after IG ON • The voltage of the engine control computer power supply is 10 V or more	Wait 10 seconds or more after IG ON	Check engine light is ON	Retained until DTC is cleared by the tool
U0402	[Invalid Data Received From TCM]	Engine control computer detects an error in the data transmitted to the transmission control computer ASSY	When all of the following conditions are met: • One or more second after IG ON • The voltage of the engine control computer power supply is 10 V or more	Wait 10 seconds or more after IG ON	Check engine light is ON	Retained until DTC is cleared by the tool
U0416	[Invalid Data Received From Vehicle Dynamics Control Module]	Engine control computer detects an error in the data received from the brake actuator ASSY	When all of the following conditions are met: • One or more second after IG ON • The voltage of the engine control computer power supply is 10 V or more	Wait 10 seconds or more after IG ON	Check engine light is ON	Retained until DTC is cleared by the tool
U0423	[Invalid Data Received From Instrument Panel Cluster Control Module]	Engine control computer detects an error in the data received from the combination meter ASSY	When all of the following conditions are met: • One or more second after IG ON • The voltage of the engine control computer power supply is 10 V or more	Wait 10 seconds or more after IG ON	Check engine light is ON	Retained until DTC is cleared by the tool

NOTE:

Diagnosis data is transmitted via CAN communication line.

5. Transmission control computer ASSY/Transmission (SSM4 display name)

DTC	Diagnostic items (SSM4 display name)	DTC detecting condition	DTC detecting conditions	DTC check procedure	Warning light	Retention of DTC
U0073	[Control Module Communication Bus "A" Off]	Communication is disabled due to high-speed CAN communication error	When all of the following conditions are met: • One or more second after IG ON • The voltage of the transmission control computer ASSY power supply is 10 V or more	Wait 10 seconds or more after IG ON	-	Retained until DTC is cleared by the tool
U0100	[Lost Communication With ECM/PCM "A"]	Transmission control computer ASSY remains unable to receive data from the engine control computer	When all of the following conditions are met: • One or more second after IG ON • The voltage of the transmission control computer ASSY power supply is 10 V or more	Wait 10 seconds or more after IG ON	-	Retained until DTC is cleared by the tool
U0122	[Lost Communication With Vehicle Dynamics Control Module]	Transmission control computer ASSY remains unable to receive data from the brake actuator ASSY	When all of the following conditions are met: • One or more second after IG ON • The voltage of the transmission control computer ASSY power supply is 10 V or more	Wait 10 seconds or more after IG ON	-	Retained until DTC is cleared by the tool

DTC	Diagnostic items (SSM4 display name)	DTC detecting condition	DTC detecting conditions	DTC check procedure	Warning light	Retention of DTC
U0140	[Lost Communication With Body Control Module]	Transmission control computer ASSY remains unable to receive data from the main body ECM (Multiplex network body computer)	• One or more second after IG ON • The voltage of the transmission control computer ASSY power supply is 10 V or more	Wait 10 seconds or more after IG ON	-	Retained until DTC is cleared by the tool
U0401	[Invalid Data Received From ECM/PCM "A"]	Transmission control computer ASSY detects an error in the data received from the engine control computer	• One or more second after IG ON • The voltage of the transmission control computer ASSY power supply is 10 V or more	Wait 10 seconds or more after IG ON	-	Retained until DTC is cleared by the tool
U0416	[Invalid Data Received From Vehicle Dynamics Control Module]	Transmission control computer ASSY detects an error in the data received from the brake actuator ASSY	• One or more second after IG ON • The voltage of the transmission control computer ASSY power supply is 10 V or more	Wait 10 seconds or more after IG ON	-	Retained until DTC is cleared by the tool
U0422	[Invalid Data Received From Body Control Module]	Transmission control computer ASSY detects an error in the data received from the main body ECM (multiplex network body computer)	• One or more second after IG ON • The voltage of the transmission control computer ASSY power supply is 10 V or more	Wait 10 seconds or more after IG ON	-	Retained until DTC is cleared by the tool

NW

NOTE:

Diagnosis data is transmitted via CAN communication line.

6. Brake actuator ASSY/Brake control-ABS/VDC system (SSM4 display name)

DTC	Diagnostic items (SSM4 display name)	DTC detecting condition	DTC detecting conditions	DTC check procedure	Warning light	Retention of DTC
U0073	[Control Module Communication Bus "A" Off]	Communication is disabled due to high-speed CAN communication error	When all of the following conditions are met: • One or more second after IG ON • The voltage of the brake actuator ASSY power supply is 10 V or more	Wait 60 seconds or more after IG ON	ABS warning light is ON	Retained until DTC is cleared by the tool
U0100	[Lost Communication With ECM/PCM "A"]	Brake actuator ASSY remains unable to receive data from the engine control computer	When all of the following conditions are met: • One or more second after IG ON • The voltage of the brake actuator ASSY power supply is 10 V or more	Wait 10 seconds or more after IG ON	ABS warning light is ON	Retained until DTC is cleared by the tool
U0101	[Lost Communication With TCM]	Brake actuator ASSY remains unable to receive data from the transmission control computer ASSY	When all of the following conditions are met: • One or more second after IG ON • The voltage of the brake actuator ASSY power supply is 10 V or more	Wait 10 seconds or more after IG ON	ABS warning light is ON	Retained until DTC is cleared by the tool
U0126	[Lost Communication With Steering Angle Sensor Module]	Brake actuator ASSY remains unable to receive data from the steering sensor (Spiral cable SUB-ASSY)	When all of the following conditions are met: • One or more second after IG ON • The voltage of the brake actuator ASSY power supply is 10 V or more	Wait 60 seconds or more after IG ON	ABS warning light is ON	Retained until DTC is cleared by the tool

NOTE:

Diagnosis data is transmitted via CAN communication line.

7. Spiral cable SUB-ASSY (with sensor)/- (SSM4 display name)
   NOTE:
   Spiral cable SUB-ASSY (with sensor) is connected to CAN communication line but does not output DTC related with CAN communication.
8. Power steering computer ASSY/Power steering (SSM4 display name)

DTC	Diagnostic items (SSM4 display name)	DTC detecting condition	DTC detecting conditions	DTC check procedure	Warning light	Retention of DTC
U0100	[Lost Communication With ECM/PCM "A"]	Power steering computer ASSY remains unable to receive data from the engine control computer	When all of the following conditions are met: • One or more second after IG ON • The voltage of the power steering computer ASSY power supply is 10 V or more	Wait 10 seconds or more after IG ON	EPS warning light is ON	Retained until DTC is cleared by the tool
U0122	[Lost Communication With Vehicle Dynamics Control Module]	Power steering computer ASSY remains unable to receive data from the brake actuator ASSY	When all of the following conditions are met: • One or more second after IG ON • The voltage of the power steering computer ASSY power supply is 10 V or more	Wait 10 seconds or more after IG ON	EPS warning light is ON	Retained until DTC is cleared by the tool
U0416	[Invalid Data Received From Vehicle Dynamics Control Module]	Power steering computer ASSY detects an error in the data received from the brake actuator ASSY	When all of the following conditions are met: • One or more second after IG ON • The voltage of the power steering computer ASSY power supply is 10 V or more	Wait 10 seconds or more after IG ON	EPS warning light is ON	Retained until DTC is cleared by the tool

NW

   NOTE:
   Diagnosis data is transmitted via CAN communication line.
9. Air conditioner amplifier ASSY/Air conditioner (SSM4 display name)

DTC	Diagnostic items (SSM4 display name)	DTC detecting condition	DTC detecting conditions	DTC check procedure	Warning light	Retention of DTC
U0073	[Control Module Communication Bus "A" Off]	Communication is disabled due to high-speed CAN communication error	When all of the following conditions are met: • One or more second after IG ON • The voltage of the air conditioner amplifier ASSY power supply is 10 V or more	Wait 10 seconds or more after IG ON	-	Retained until DTC is cleared by the tool
U0100	[Lost Communication With ECM/PCM "A"]	Air conditioner amplifier ASSY remains unable to receive data from the engine control computer	When all of the following conditions are met: • One or more second after IG ON • The voltage of the air conditioner amplifier ASSY power supply is 10 V or more	Wait 10 seconds or more after IG ON	-	Retained until DTC is cleared by the tool
U0101	[Lost Communication With TCM]	Air conditioner amplifier ASSY remains unable to receive data from the transmission control computer ASSY	When all of the following conditions are met: • One or more second after IG ON • The voltage of the air conditioner amplifier ASSY power supply is 10 V or more	Wait 10 seconds or more after IG ON	-	Retained until DTC is cleared by the tool

DTC	Diagnostic items (SSM4 display name)	DTC detecting condition	DTC detecting conditions	DTC check procedure	Warning light	Retention of DTC
U0122	[Lost Communication With Vehicle Dynamics Control Module]	Air conditioner amplifier ASSY remains unable to receive data from the brake actuator ASSY	When all of the following conditions are met: • One or more second after IG ON • The voltage of the air conditioner amplifier ASSY power supply is 10 V or more	Wait 10 seconds or more after IG ON	-	Retained until DTC is cleared by the tool
U0140	[Lost Communication With Body Control Module]	Air conditioner amplifier ASSY remains unable to receive data from the main body ECM (Multiplex network body computer)	When all of the following conditions are met: • One or more second after IG ON • The voltage of the air conditioner amplifier ASSY power supply is 10 V or more	Wait 10 seconds or more after IG ON	-	Retained until DTC is cleared by the tool
U0155	[Lost Communication With Instrument Panel Cluster (IPC) Control Module]	Air conditioner amplifier ASSY remains unable to receive data from the combination meter ASSY	When all of the following conditions are met: • One or more second after IG ON • The voltage of the air conditioner amplifier ASSY power supply is 10 V or more	Wait 10 seconds or more after IG ON	-	Retained until DTC is cleared by the tool
U0401	[Invalid Data Received From ECM/PCM "A"]	Air conditioner amplifier ASSY has been unable to receive data transmitted to the engine control computer for one second or more	When all of the following conditions are met: • One or more second after IG ON • The voltage of the air conditioner amplifier ASSY power supply is 10 V or more	Wait 10 seconds or more after IG ON	-	Retained until DTC is cleared by the tool
U0402	[Invalid Data Received From TCM]	Air conditioner amplifier ASSY detects an error in the data received from the transmission control computer ASSY	When all of the following conditions are met: • One or more second after IG ON • The voltage of the air conditioner amplifier ASSY power supply is 10 V or more	Wait 10 seconds or more after IG ON	-	Retained until DTC is cleared by the tool
U0416	[Invalid Data Received From Vehicle Dynamics Control Module]	Air conditioner amplifier ASSY detects an error in the data received from the brake actuator ASSY	When all of the following conditions are met: • One or more second after IG ON • The voltage of the air conditioner amplifier ASSY power supply is 10 V or more	Wait 10 seconds or more after IG ON	-	Retained until DTC is cleared by the tool
U0422	[Invalid Data Received From Body Control Module]	Air conditioner amplifier ASSY detects an error in the data received from the main body ECM (Multiplex network body computer)	When all of the following conditions are met: • One or more second after IG ON • The voltage of the air conditioner amplifier ASSY power supply is 10 V or more	Wait 10 seconds or more after IG ON	-	Retained until DTC is cleared by the tool
U0423	[Invalid Data Received From Instrument Panel Cluster Control Module]	Air conditioner amplifier ASSY detects an error in the data received from the combination meter ASSY	When all of the following conditions are met: • One or more second after IG ON • The voltage of the air conditioner amplifier ASSY power supply is 10 V or more	Wait 10 seconds or more after IG ON	-	Retained until DTC is cleared by the tool

NOTE:

Diagnosis data is transmitted via CAN communication line.

10. Airbag sensor ASSY/Airbag system (SSM4 display name)

DTC	Diagnostic items (SSM4 display name)	DTC detecting condition	DTC detecting conditions	DTC check procedure	Warning light	Retention of DTC
U0073	[Control Module Communication Bus "A" Off]	Communication is disabled due to high-speed CAN communication error	When all of the following conditions are met: • One or more second after IG ON • The voltage of the airbag sensor ASSY power supply is 10 V or more	Wait 60 seconds or more after IG ON	Airbag warning light is ON	Retained until DTC is cleared by the tool

NOTE:

Diagnosis data is transmitted via CAN communication line.

Check using DTC check sheet

- DTC check sheet

	(A)	(B)	(C)										(D)					
			ECM	TCM	VDC	STR	EPS	BIU	A/B	MET	A/C	KPS	ECM	TCM	VDC	BIU	MET	A/C
		U0073	U0100	U0101	U0122	U0126	U0131	U0140	U0151	U0155	U0164	U0327	U0401	U0402	U0416	U0422	U0423	U0424
ECM			—			—	—	—	—		—	—	—			—		—
TCM				—		—	—		—	—	—	—		—			—	—
VDC					—		—	—	—	—	—	—	—	—	—	—	—	—
STR		—	—	—	—	—	—	—	—	—	—	—	—	—	—	—	—	—
EPS		—		—		—	—	—	—	—	—	—	—	—		—	—	—
BIU						—	—	—	—							—		
A/B			—	—	—	—	—	—	—	—	—	—	—	—	—	—	—	—
MET				—		—				—	—	—	—	—	—	—	—	—
A/C						—	—		—		—	—						—
KPS						—	—		—		—	—		—	—		—	—

LAN12050

Captions in illustration

(A)	Installation check	VDC	Brake actuator ASSY	A/B	Airbag CM
(B)	Bus off detection	MET	Combination meter ASSY	A/C	Air conditioner amplifier ASSY
(C)	Missing data detection	BIU	Body integrated unit	TCU	Transmission control computer ASSY
(D)	Data error detection	KPS	Collation ECM (Smart key computer ASSY)	EPS	Power steering computer ASSY
		STR	Spiral cable SUB-ASSY	ECU	Engine control computer

Procedure

1. Module installation check
   (a) Put "-" mark in the box under the installation check column if the vehicle to be inspected does not have the relevant module.
   (b) Put "-" marks in all blank boxes in the same row that the "-" mark has been placed.
2. Bus off detection and missing data detection

NOTE:
DTC will not be displayed if CAN diagnostic module has an open harness which causes missing data, etc. (current malfunction). In this case, perform an inspection according to "Check using the check sheet of communication for initializing", and then use the following sheet to confirm that it has changed to a past malfunction.
(a) In the check sheet, put "×" in the box under the DTCs detected by each module.
(b) Identify and repair the faulty part by referring to the example of missing DTC detection. (Refer to the example of missing DTC detection)

3. Data error detection
NOTE:
If the P.B.C code is detected when starting the engine again, perform the diagnosis of the P.B.C code.
If bus off and missing data are present, perform the diagnosis for these problems first.
(a) If more than one module detects DTC for the same module, replace the module being detected.
(b) If only one module detects DTC, replace the module being detected.
(c) If DTC recurs, re-install the module which has been replaced, and replace the module which detected DTC.
(d) If DTC recurs, replace both modules.

NW

Example of missing DTC detection
Network diagram

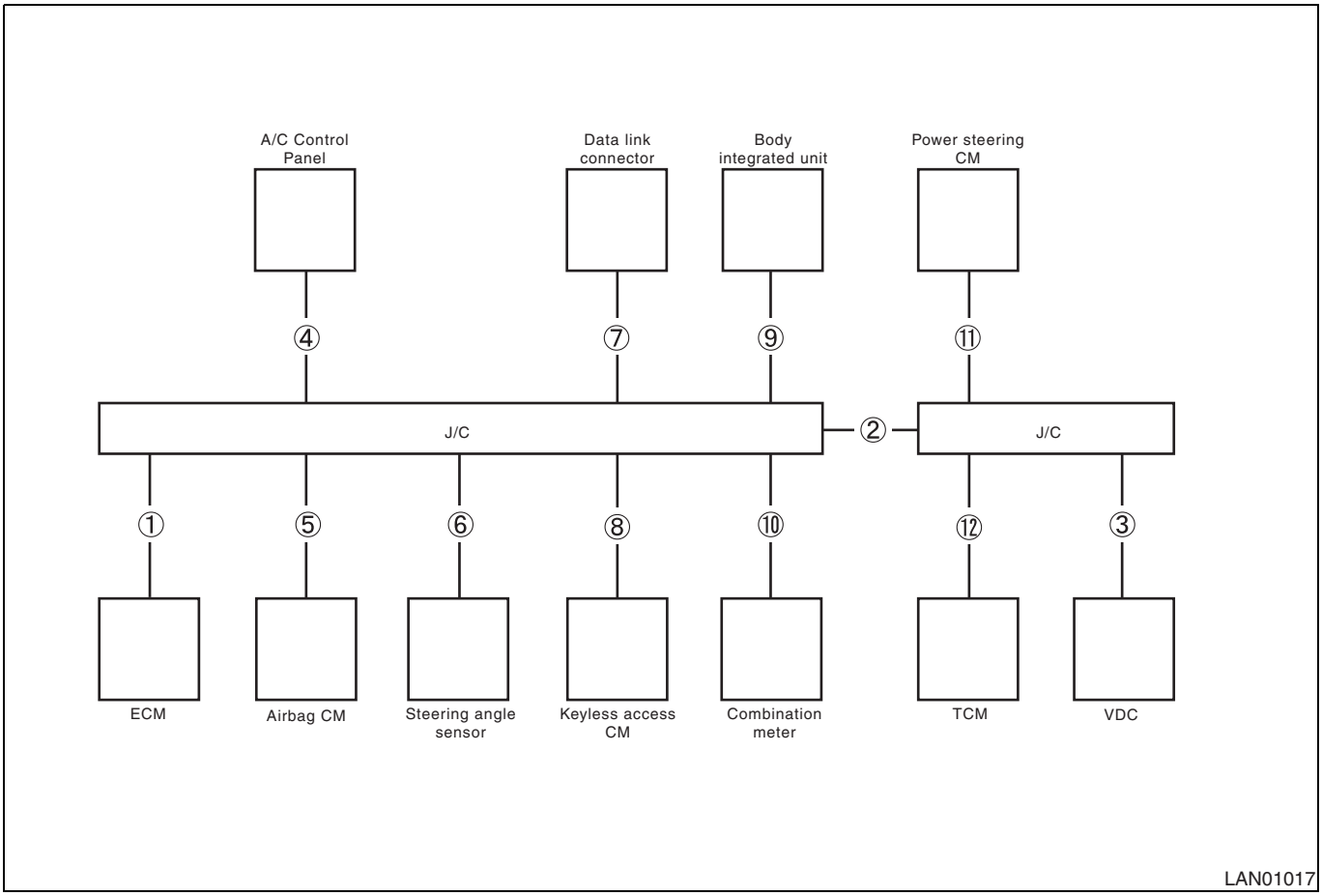

LAN01017

Wiring location	Type	Part	CANH	CANL
No.1	Main line	ECM vicinity	D43-9-A33-19	D43-20-A33-18
No.2	Main line	J/C1-J/C2	D43-1-A17-7	D43-12-A17-18
No.3	Main line	VDCCM vicinity	A17-6-A5-26	A17-17-A5-14
No.4	Sub-line	A/C CM vicinity	D43-10-D19-13	D43-21-D19-12
No.5	Sub-line	Airbag CM vicinity	D43-8-D27-13	D43-19-D27-22

Wiring location	Type	Part	CANH	CANL
No.6	Sub-line	Steering angle sensor vicinity	D43-6-D56-3	D43-17-D56-2
No.7	Sub-line	Data link connector vicinity	D43-5-D10-6	D43-16-D10-14
No.8	Sub-line	Keyless access CM	D43-4-D41-14	D43-15-D41-15
No.9	Sub-line	Body integrated unit	D43-3-D5-14	D43-14-D5-13
No.10	Sub-line	Combination meter vicinity	D43-2-D7-6	D43-13-D7-7
No.11	Sub-line	Power steering CM vicinity	A17-8-A15-1	A17-19-A15-7
No.12	Sub-line	TCM vicinity	A17-5-A18-29	A17-16-A18-28

No. 6 is open

	(A)	(B)	(C)										(D)					
			ECM	TCM	VDC	STR	EPS	BIU	A/B	MET	A/C	KPS	ECM	TCM	VDC	BIU	MET	A/C
		U0073	U0100	U0101	U0122	U0126	U0131	U0140	U0151	U0155	U0164	U0327	U0401	U0402	U0416	U0422	U0423	U0424
ECM			—			—	—	—	—		—	—	—			—		—
TCM				—		—	—		—	—	—	—		—			—	—
VDC					—	×	—	—	—	—	—	—	—	—	—	—	—	—
STR		—	—	—	—	—	—	—	—	—	—	—	—	—	—	—	—	—
EPS		—		—		—	—	—	—	—	—	—	—	—		—	—	—
BIU						—	—	—	—							—		
A/B			—	—	—	—	—	—	—	—	—	—	—	—	—	—	—	—
MET				—		—				—	—	—	—	—	—	—	—	—
A/C						—	—		—		—	—						—
KPS						—	—		—		—	—		—	—		—	—

LAN12051

11. DTC matrix table
    (1) For the past communication malfunctions of the ECMs and sensors connected to Vbus, the defective part can be identified based on the following matrix tables.
    NOTE:
    - Use the matrix table below to identify the part which has lost communication according to the DTC output by each ECM connected to CAN communication line.
    - For diagnosis of open circuit in sub-line and lost communication, use "Check sheet of communication for initializing". The check sheet enables quick identification of a defective part because if an ECM or sensor is connected to an open sub-line, it will not respond.

Diagnosis result		Description			
Source ECM	DTC output	Sub-lines 57-63 Ω(Transmission control computer ASSY system) (Refer to NW - 82)	Sub-lines 57-63 Ω(Brake actuator ASSY system) (Refer to NW - 85)	Sub-lines 57-63 Ω(Spiral cable SUB-ASSY system) (Refer to NW - 87)	Sub-lines 57-63 Ω(Engine control computer system) (Refer to NW - 90)
Transmission control computer ASSY	U0073	0*1	×	×	×
	U0100	0*1	×	×	0
	U0122	0*1	0	×	×
	U0140	0*1	×	×	×
	U0401	×*1	×	×	×
	U0416	×*1	×	×	×
	U0422	×*1	×	×	×
Brake actuator ASSY	U0073	×	0*1	×	×
	U0100	×	0*1	×	0
	U0101	0	0*1	×	×
	U0126	×	0*1	0	×
Engine control computer	U0073	×	×	×	0*1
	U0101	0	×	×	0*1
	U0122	×	0	×	0*1
	U0155	×	×	×	0*1
	U0402	×	×	×	×*1
	U0416	×	×	×	×*1
	U0423	×	×	×	×*1
Airbag sensor ASSY	U0073	×	×	×	×
Power steering computer ASSY	U0100	×	×	×	0
	U0122	×	0	×	×
	U0416	×	×	×	×
Air conditioner amplifier ASSY	U0073	×	×	×	×
	U0100	×	×	×	0
	U0101	0	×	×	×
	U0122	×	0	×	×
	U0140	×	×	×	×
	U0155	×	×	×	×
	U0401	×	×	×	×
	U0402	×	×	×	×
	U0416	×	×	×	×
	U0422	×	×	×	×
	U0423	×	×	×	×
Combination meter ASSY	U0073	×	×	×	×
	U0100	×	×	×	0
	U0122	×	0	×	×
	U0131	×	×	×	×
	U0140	×	×	×	×
	U0151	×	×	×	×
Collation ECM (Smart key computer ASSY)	U0073	×	×	×	×
	U0100	×	×	×	0
	U0101	0	×	×	×
	U0122	×	0	×	×
	U0140	×	×	×	×
	U0155	×	×	×	×
	U0401	×	×	×	×
	U0422	×	×	×	×

Diagnosis result		Description			
Source ECM	DTC output	Sub-lines 57-63 Ω(Transmission control computer ASSY system) (Refer to NW - 82)	Sub-lines 57-63 Ω(Brake actuator ASSY system) (Refer to NW - 85)	Sub-lines 57-63 Ω(Spiral cable SUB-ASSY system) (Refer to NW - 87)	Sub-lines 57-63 Ω(Engine control computer system) (Refer to NW - 90)
Main body ECM (Multiplex network body computer)	U0073	×	×	×	×
	U0100	×	×	×	0
	U0101	0	×	×	×
	U0122	×	0	×	×
	U0155	×	×	×	×
	U0164	×	×	×	×
	U0327	×	×	×	×
	U0401	×	×	×	×
	U0402	×	×	×	×
	U0416	×	×	×	×
	U0423	×	×	×	×
	U0424	×	×	×	×
	U1201	×	×	×	×

Diagnosis result		Description			
Source ECM	DTC output	Sub-lines 57-63 Ω(A/BCM system) (Refer to NW - 91)	Sub-lines 57-63 Ω(Electric power steering system) (Refer to NW - 94)	Sub-lines 57-63 Ω(Air conditioner amplifier ASSY system) (Refer to NW - 97)	Sub-lines 57-63 Ω(Combination meter ASSY system) (Refer to NW - 100)
Transmission control computer ASSY	U0073	×	×	×	×
	U0100	×	×	×	×
	U0122	×	×	×	×
	U0140	×	×	×	×
	U0401	×	×	×	×
	U0416	×	×	×	×
	U0422	×	×	×	×
Brake actuator ASSY	U0073	×	×	×	×
	U0100	×	×	×	×
	U0101	×	×	×	×
	U0126	×	×	×	×
Engine control computer	U0073	×	×	×	×
	U0101	×	×	×	×
	U0122	×	×	×	×
	U0155	×	×	×	0
	U0402	×	×	×	×
	U0416	×	×	×	×
	U0423	×	×	×	×
Airbag sensor ASSY	U0073	0*1	×	×	×
Power steering computer ASSY	U0100	×	0*1	×	×
	U0122	×	0*1	×	×
	U0416	×	×*1	×	×

Diagnosis result		Description			
Source ECM	DTC output	Sub-lines 57-63 Ω(A/B CM system) (Refer to NW - 91)	Sub-lines 57-63 Ω(Electric power steering system) (Refer to NW - 94)	Sub-lines 57-63 Ω(Air conditioner amplifier ASSY system) (Refer to NW - 97)	Sub-lines 57-63 Ω(Combination meter ASSY system) (Refer to NW - 100)
Air conditioner amplifier ASSY	U0073	×	×	0*1	×
	U0100	×	×	0*1	×
	U0101	×	×	0*1	×
	U0122	×	×	0*1	×
	U0140	×	×	0*1	×
	U0155	×	×	0*1	0
	U0401	×	×	×*1	×
	U0402	×	×	×*1	×
	U0416	×	×	×*1	×
	U0422	×	×	×*1	×
	U0423	×	×	×*1	×
Combination meter ASSY	U0073	×	×	×	0*1
	U0100	×	×	×	0*1
	U0122	×	×	×	0*1
	U0131	×	0	×	0*1
	U0140	×	×	×	0*1
	U0151	0	×	×	0*1
Collation ECM (Smart key computer ASSY)	U0073	×	×	×	×
	U0100	×	×	×	×
	U0101	×	×	×	×
	U0122	×	×	×	×
	U0140	×	×	×	×
	U0155	×	×	×	0
	U0401	×	×	×	×
	U0422	×	×	×	×
Main body ECM (Multiplex network body computer)	U0073	×	×	×	×
	U0100	×	×	×	×
	U0101	×	×	×	×
	U0122	×	×	×	×
	U0155	×	×	×	0
	U0164	×	×	0	×
	U0327	×	×	×	×
	U0401	×	×	×	×
	U0402	×	×	×	×
	U0416	×	×	×	×
	U0423	×	×	×	×
	U0424	×	×	×	×
	U1201	×	×	×	×

Diagnosis result		Description	
Source ECM	DTC output	Sub-lines 57-63 Ω(Keyless access system) (Refer to NW - 102)	Sub-lines 57-63 Ω(Body integrated system) (Refer to NW - 104)
Transmission control computer ASSY	U0073	×	×
	U0100	×	×
	U0122	×	×
	U0140	×	0
	U0401	×	×
	U0416	×	×
	U0422	×	×

Diagnosis result		Description	
Source ECM	DTC output	Sub-lines 57-63 Ω(Keyless access system) (Refer to NW - 102)	Sub-lines 57-63 Ω(Body integrated system) (Refer to NW - 104)
Brake actuator ASSY	U0073	×	×
	U0100	×	×
	U0101	×	×
	U0126	×	×
Engine control computer	U0073	×	×
	U0101	×	×
	U0122	×	×
	U0155	×	×
	U0402	×	×
	U0416	×	×
	U0423	×	×
Airbag sensor ASSY	U0073	×	×
Power steering computer ASSY	U0100	×	×
	U0122	×	×
	U0416	×	×
Air conditioner amplifier ASSY	U0073	×	×
	U0100	×	×
	U0101	×	×
	U0122	×	×
	U0140	×	0
	U0155	×	×
	U0401	×	×
	U0402	×	×
	U0416	×	×
	U0422	×	×
	U0423	×	×
Combination meter ASSY	U0073	×	×
	U0100	×	×
	U0122	×	×
	U0131	×	×
	U0140	×	0
	U0151	×	×
Collation ECM (Smart key computer ASSY)	U0073	0*1	×
	U0100	0*1	×
	U0101	0*1	×
	U0122	0*1	×
	U0140	0*1	0
	U0155	0*1	×
	U0401	×*1	×
	U0422	×*1	×

NW

Diagnosis result		Description	
Source ECM	DTC output	Sub-lines 57-63 Ω(Keyless access system) (Refer to NW - 102)	Sub-lines 57-63 Ω(Body integrated system) (Refer to NW - 104)
Main body ECM (Multiplex network body computer)	U0073	×	0*1
	U0100	×	0*1
	U0101	×	0*1
	U0122	×	0*1
	U0155	×	0*1
	U0164	×	0*1
	U0327	0	0*1
	U0401	×	×*1
	U0402	×	×*1
	U0416	×	×*1
	U0423	×	×*1
	U0424	×	×*1
	U1201	×	×*1

NW

NOTE:

- 0: DTC is output.
- ×: DTC may be output if either end of the sub-line is open
- *1: DTC cannot be output in case of lost communication
- In case of an open circuit in the CAN bus main line, short circuit between CAN bus lines (CAN-H and CAN-L), CAN bus +B short, or CAN bus GND short, many DTCs may be output by most ECMs (or sensors) on CAN bus or several communication error messages may be displayed on SSM4. To solve this problem, start the inspection using "Check sheet of communication for initializing". (Refer to NW - 33)
- In case of either end of the CAN bus sub-line is open, irrelevant DTCs may be output (DTC may not be displayed properly) or communication error messages may be displayed on SSM4.

12. CAN bus waveform

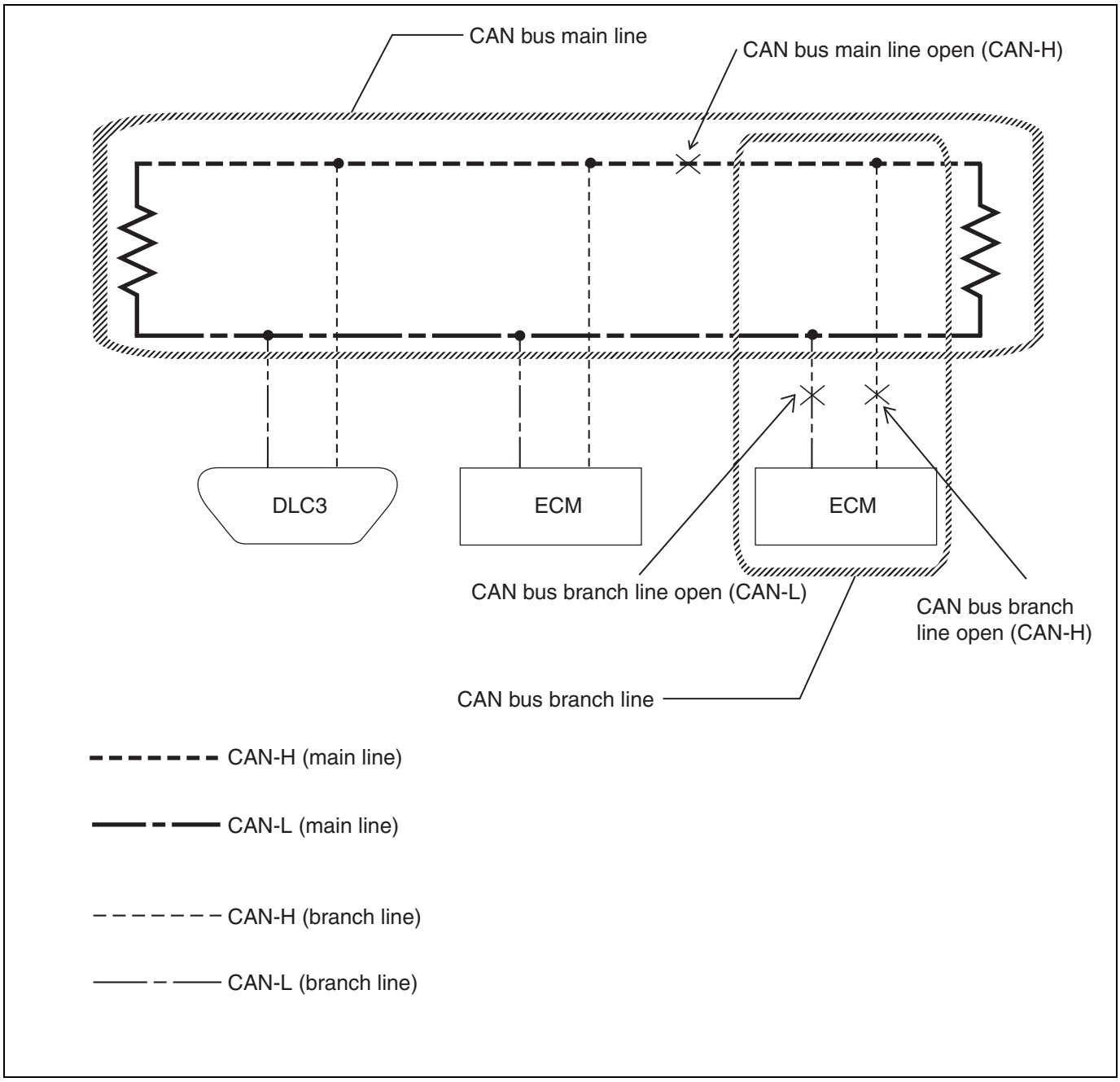

NOTE:

- CAN bus waveform is obtained by measuring signals between CANH-GND terminals and between CANL-GND terminals of the data link connector. (Use as a reference of the diagnostics of CAN communication line)
- If multiple ECMs seem to be defective based on "Bus diagnosis" of SSM4 and DTC, perform resistance inspection on CAN bus (Refer to NW - 44) first. If no abnormal condition is detected, then check the waveform by following the procedure described below.
- If the waveform is similar to none of the three waveforms (Group 1), possible defects include open circuit in CAN bus main line, open circuit on either end of CAN bus sub-line, and CAN bus (CAN-H or CAN-L) shorted to GND (Group 2).
- Check whether the waveform is disturbed when the connector and wiring harness is swayed vertically and horizontally.

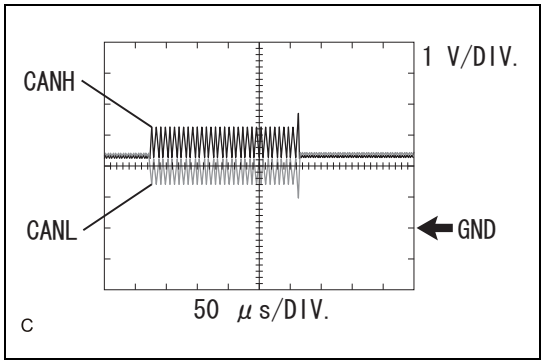

(1) CAN bus waveform (Group 1)
(a)Normal waveform

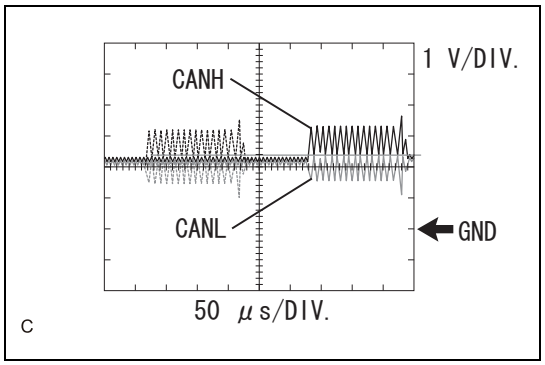

(b)Open circuit in both lines of one of ECM sub-lines (both CAN-H and CAN-L)
NOTE:
- If an ECM or sensor is connected to CAN bus sub-line with open circuit in both lines, the signal will disappear (indicated by dotted line). (the signals from other ECMs and sensors are displayed normally).
- The waveform is similar to the normal waveform. The defective part can be identified by CAN bus check procedure.

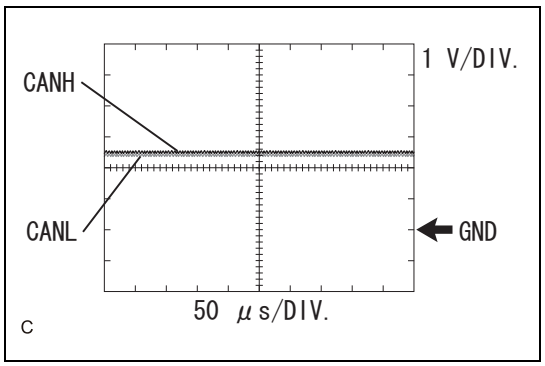

(c)CAN bus short (CAN-H and CAN-L are shorted)
NOTE:
- No waveform is displayed.
- In case of ECM internal error, the waveform will change by removing a ECM. If the waveform does not change, the wiring harness may be defective.

(2) Example: CAN bus waveform (Group 2)
CAUTION:
The actual waveform greatly depends on the location of open or short circuit, and the waveforms is only an examples.

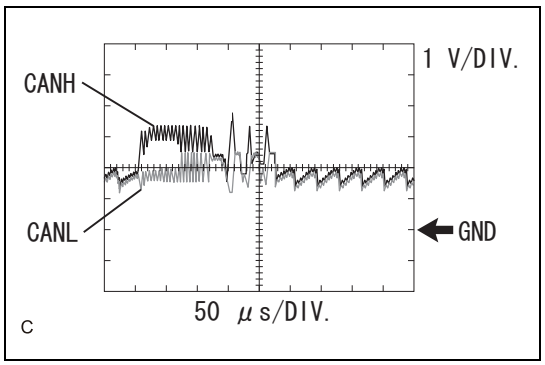

(a)Open circuit on either CAN bus sub-line (CAN-H)
NOTE:
- If an ECM is connected to CAN bus sub-line with an open circuit in either CAN-H or CAN-L, abnormal waveform is output. This defect interferes the signals from other parts, which deforms the waveform of other parts.
- Identify the defective part by performing CAN bus check, based on DTC, or removing each ECM or sensor to observe the waveform change. If ECM or sensor with open circuit in either CAN-H or CAN-L is removed, the waveform will be identical to the one when there is an open circuit in both CAN-H and CAN-L on CAN bus sub-line.

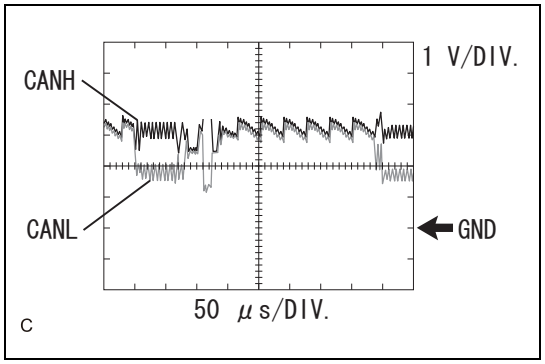

(b)Open circuit on either CAN bus sub-line (CAN-L)

NOTE:

- If an ECM is connected to CAN bus sub-line with an open circuit in either CAN-H or CAN-L, abnormal waveform is output. This defect interferes the signals from other parts, which deforms the waveform of other parts.
- Identify the defective part by performing CAN bus check, based on DTC, or removing each ECM or sensor to observe the waveform change. If ECM or sensor with open circuit in either CAN-H or CAN-L is removed, the waveform will be identical to the one when there is an open circuit in both CAN-H and CAN-L on CAN bus sub-line.

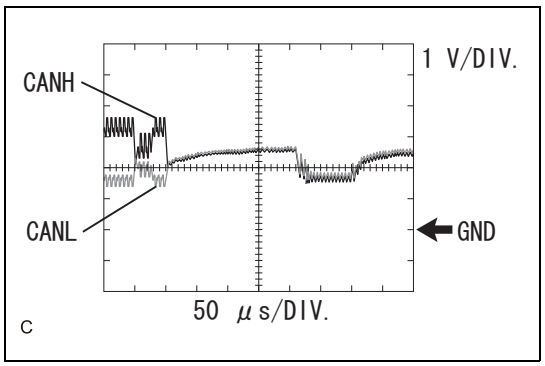

(c)Open circuit in CAN-H on CAN bus main line

NOTE:

- If an ECM or sensor is close to the data link connector in relation to the open circuit, it shows a nearly normal waveform.
- If an ECM or sensor is on the other side of the data link connector, it shows an abnormal waveform.
- An open circuit in CAN bus main line can be identified by measuring the resistance between CAN-H and CAN-L terminals on CAN bus sub-line (wiring harness).

NW

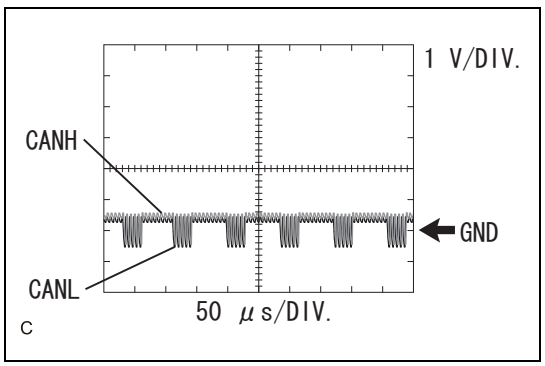

(d)CAN-H shorted to GND (CAN bus line)

NOTE:

In case of ECM internal error, remove an ECM one by one to check whether the waveform changes or not. If it does not change, the wiring harness may be defective.

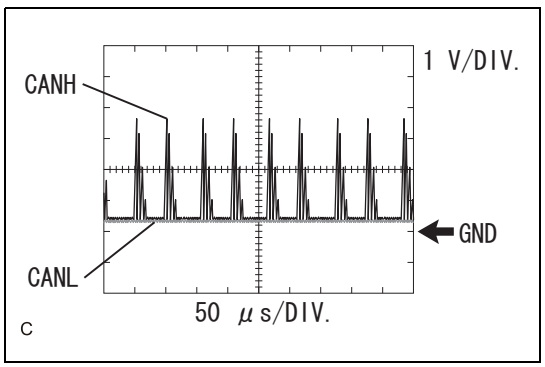

(e)CAN-L shorted to GND (CAN bus line)

NOTE:

In case of ECM internal error, remove an ECM one by one to check whether the waveform changes or not. If it does not change, the wiring harness may be defective.

Circuit figure

1. Vbus

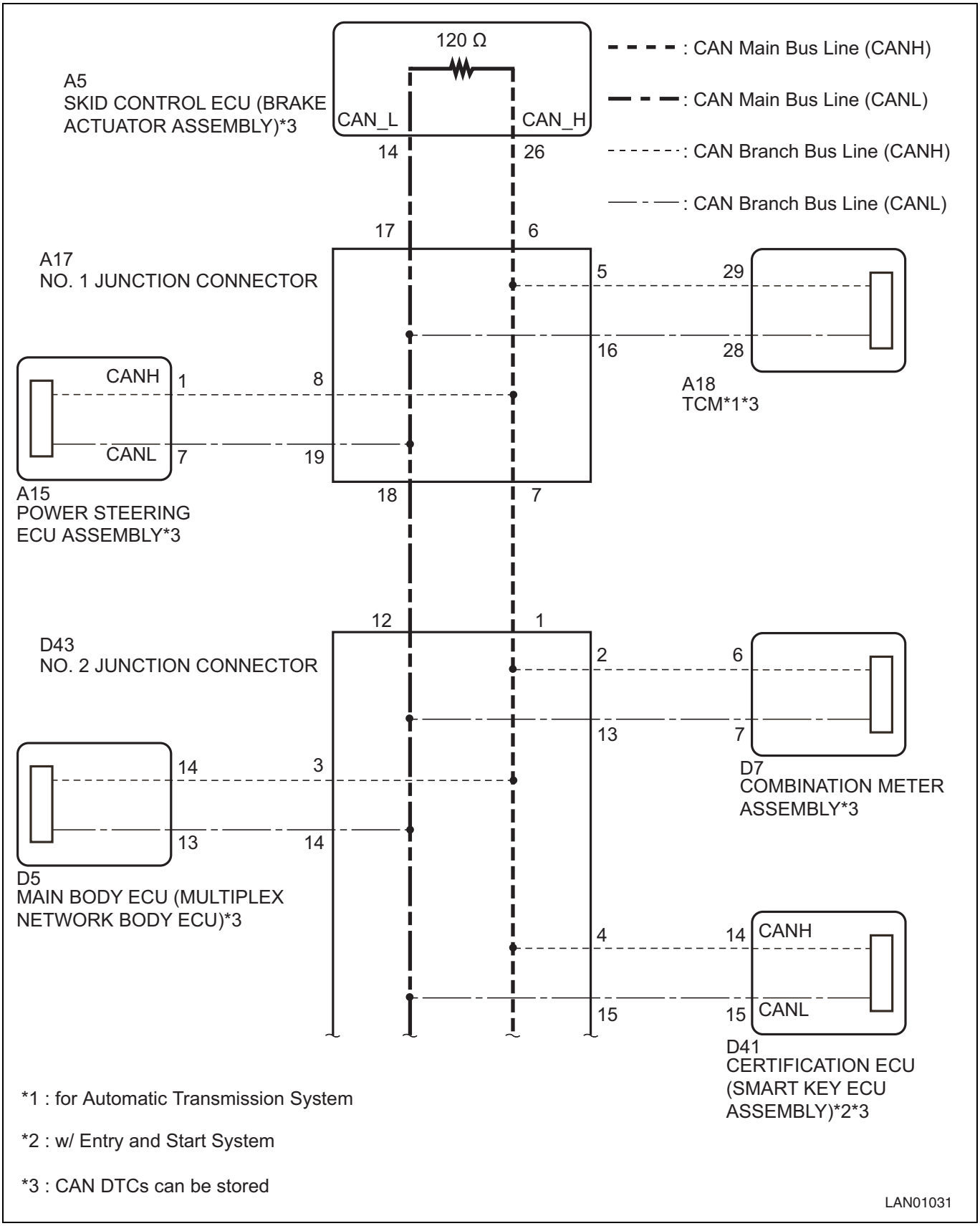
120 Ω
: CAN Main Bus Line (CANH)
: CAN Main Bus Line (CANL)
: CAN Branch Bus Line (CANH)
: CAN Branch Bus Line (CANL)
A5
SKID CONTROL ECU (BRAKE ACTUATOR ASSEMBLY)*3
CAN_L
CAN_H
14
26
17
6
A17
NO. 1 JUNCTION CONNECTOR
5
29
16
28
A18
TCM*1*3
CANH
1
8
CANL
7
19
A15
POWER STEERING ECU ASSEMBLY*3
18
7
12
1
D43
NO. 2 JUNCTION CONNECTOR
2
6
13
7
D7
COMBINATION METER ASSEMBLY*3
14
3
13
14
D5
MAIN BODY ECU (MULTIPLEX NETWORK BODY ECU)*3
4
14
CANH
15
15
CANL
D41
CERTIFICATION ECU (SMART KEY ECU ASSEMBLY)*2*3
*1 : for Automatic Transmission System
*2 : w/ Entry and Start System
*3 : CAN DTCs can be stored
LAN01031

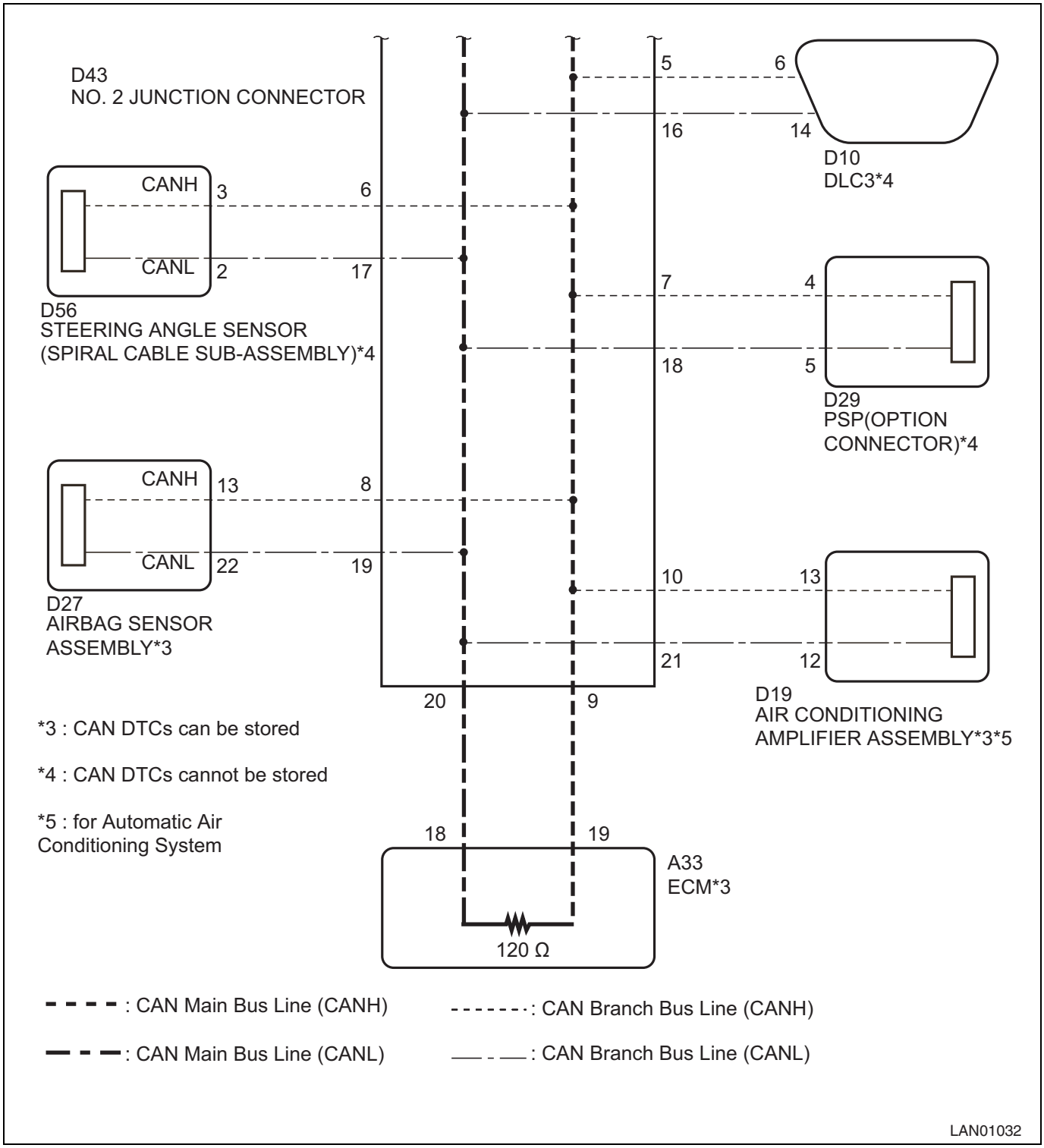

NOTE:

The main body ECM (Multiplex network body computer) and the collation ECM (Smart key computer ASSY) are also connected to LIN communication line. (Refer to NW - 8)

ECM terminal arrangement

CAUTION:

- Before measuring the resistance of CAN bus, turn the ignition OFF and leave the vehicle as is for at least one minute without operating keys, switches, and doors. Disconnect the auxiliary battery and wait for another one minute or more.
- After IG OFF, you may need to wait for some time before disconnecting the auxiliary battery terminal. Before starting the troubleshooting, refer to the procedure for disconnecting the auxiliary battery terminals. (Refer to IN - 6)

NOTE:
CAN communication system (ECM and sensor) may contain customized settings due to optional configuration. Before starting the procedure, make sure what type of systems (ECM and sensor) are implemented on the vehicle.

1. Wiring harness connector (CAN J/C1)
   (1) Wiring harness connector (CAN J/C1) (Instrument panel wire on right side of the vehicle) (Vbus)

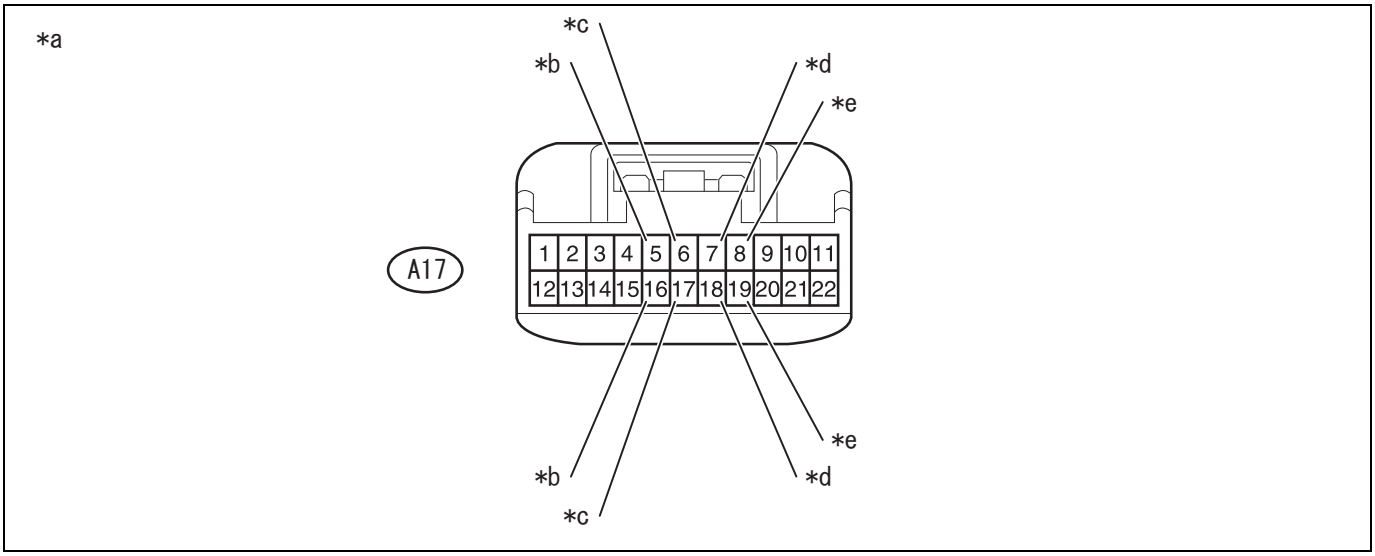

Captions in illustration

*a	Front side of vehicle wiring harness connector Wiring harness connector (CAN J/C1)	*b	To the transmission control computer ASSY
*c	To the skid control ECM (Brake actuator ASSY) [Vbus main line]	*d	To CAN No.2 junction connector [Vbus main line]
*e	To the power steering computer ASSY	-	-

ECM/sensor connection	Terminal No.	Wiring color
Transmission control computer ASSY	A17-5	B-W
	A17-16	L
Skid control ECM (Brake actuator ASSY) [Vbus main line]	A17-6	BR
	A17-17	B-R
CAN No.2 junction connector [Vbus main line]	A17-7	W-B
	A17-18	R-Y
Power steering computer ASSY	A17-8	B
	A17-19	W

2. Wiring harness connector (CAN J/C2)
   (1) Wiring harness connector (CAN J/C2) (Instrument panel wire on left side of the vehicle) (Vbus)

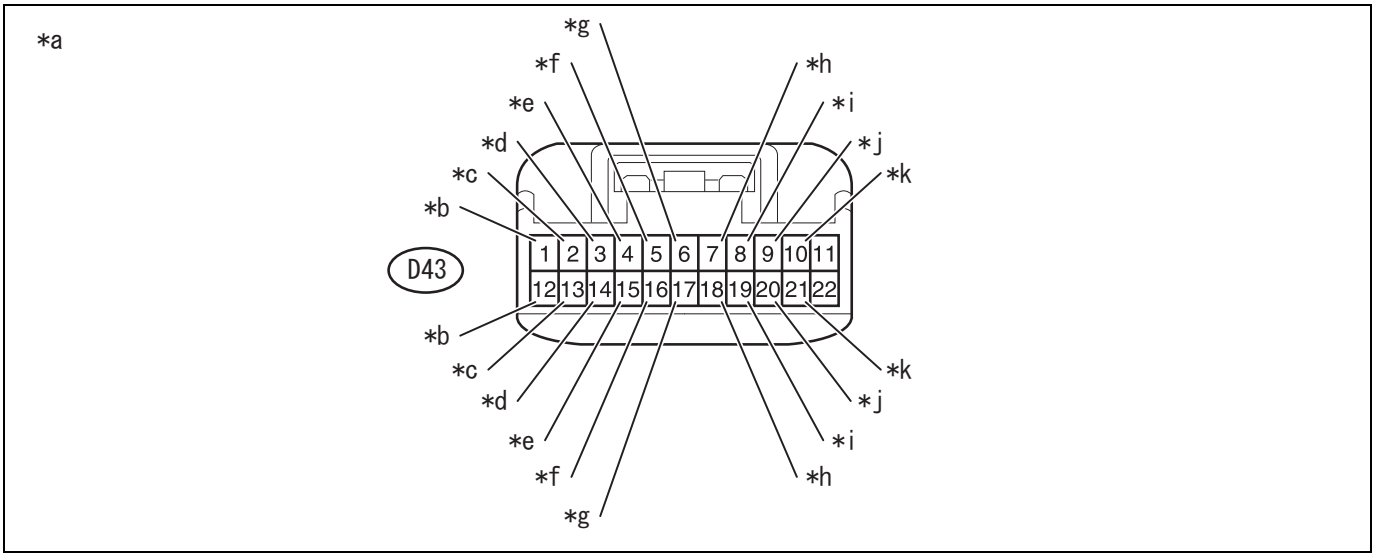

Captions in illustration

*a	Front side of vehicle wiring harness connector Wiring harness connector (CAN J/C2)	*b	To the wiring harness connector (CAN J/C1) [Vbus main line]
*c	To the combination meter ASSY	*d	To the main body ECM (Multiplex network body computer)
*e	To the collation ECM (Smart key computer ASSY)	*f	To the data link connector
*g	To the steering angle sensor (Spiral cable SUB-ASSY)	*h	To PSP (Accessory bus buffer)
*i	To the airbag sensor ASSY	*j	To the engine control computer [Vbus main line]
*k	To the air conditioner amplifier ASSY	-	-

ECM/sensor connection	Terminal No.	Wiring color
CAN No.1 junction connector [Vbus main line]	D43-1	W-B
	D43-12	R-Y
Combination meter ASSY	D43-2	BR
	D43-13	BR-W
Main body ECM (Multiplex network body computer)	D43-3	P
	D43-14	LG
Collation ECM (Smart key computer ASSY)	D43-4	G
	D43-15	R
Data link connector	D43-5	B-Y
	D43-16	LG
Spiral cable SUB-ASSY	D43-6	G-W
	D43-17	G
PSP (Accessory bus buffer)	D43-7	P
	D43-18	L
Airbag sensor ASSY	D43-8	P-L
	D43-19	R-W
Engine control computer [Vbus main line]	D43-9	O
	D43-20	B-P
Air conditioner amplifier ASSY	D43-10	L-W
	D43-21	L-Y

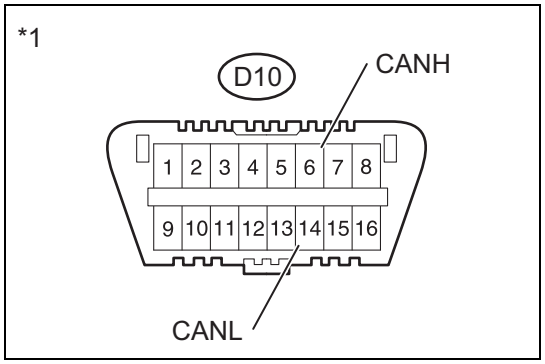

3. Data link connector
   (1) Inspection of data link connector (Vbus sub-line)
      (a)Disconnect the battery ground terminal.
      (b)Measure the resistance between the terminals.

Resistance

Vbus sub-line

Inspection terminals	Inspection conditions	Standard value
D10-6←→D10-14	Disconnection of the battery ground terminal	57 to 63 Ω
D10-6←→GND	Disconnection of the battery ground terminal	200 Ωor more
D10-14←→GND	Disconnection of the battery ground terminal	200 Ωor more
D10-6←→+B	Disconnection of the battery ground terminal	6 kΩ or more
D10-14←→+B	Disconnection of the battery ground terminal	6 kΩ or more

Captions in illustration

*1	Data link connector

4. Engine control computer
   (1) Terminal arrangement

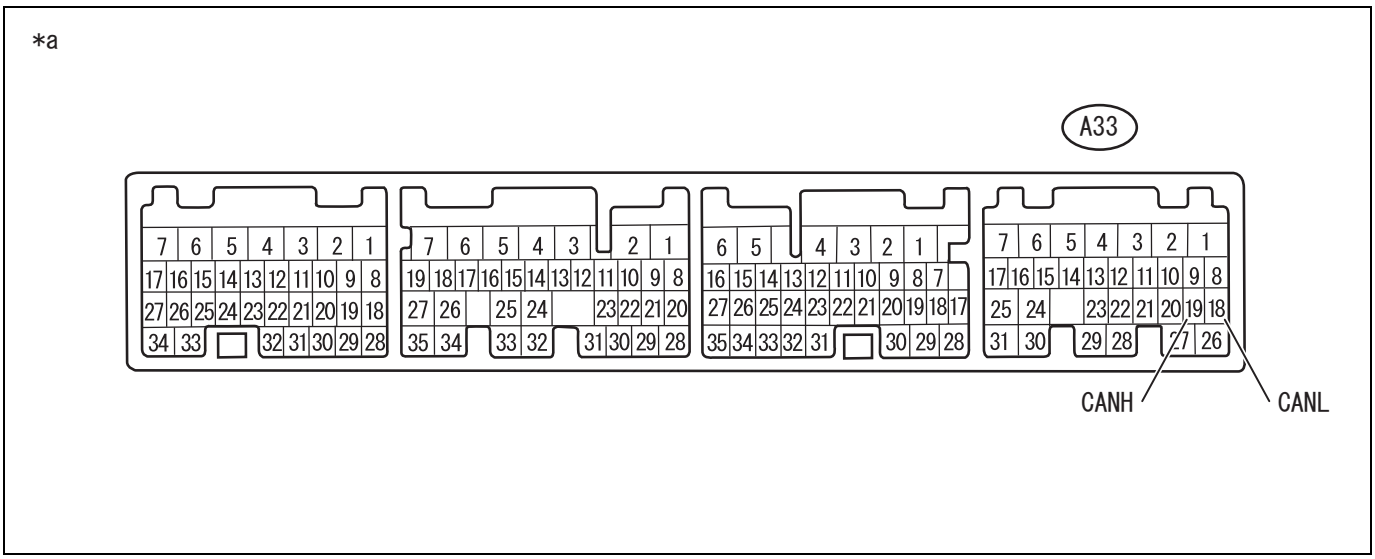

Captions in illustration

*a	Connector not connected (Engine control computer)	-	-

Terminal No.	terminal symbol
A33-19	-
A33-18	-

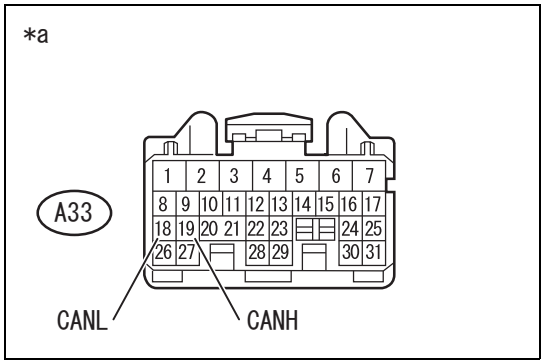

   (2) Inspection of vehicle harness of engine control computer (Vbus main line)
      (a)Disconnect the battery ground terminal, and then disconnect the vehicle harness connector A33 from the engine control computer.
      (b)Measure the resistance between the terminals.

Resistance

Vbus main line

Inspection terminals	Inspection conditions	Standard value
A33-19←→A33-18	Disconnection of the battery ground terminal	114 to 126 Ω

Inspection terminals	Inspection conditions	Standard value
A33-19←→GND	Disconnection of the battery ground terminal	200 Ωor more
A33-18←→GND	Disconnection of the battery ground terminal	200 Ωor more
A33-19←→+B	Disconnection of the battery ground terminal	6 kΩ or more
A33-18←→+B	Disconnection of the battery ground terminal	6 kΩ or more

Captions in illustration

*a	Front side of vehicle wiring harness connector (Engine control computer)

5. Transmission control computer ASSY (Transmission A/T)
   (1) Terminal arrangement

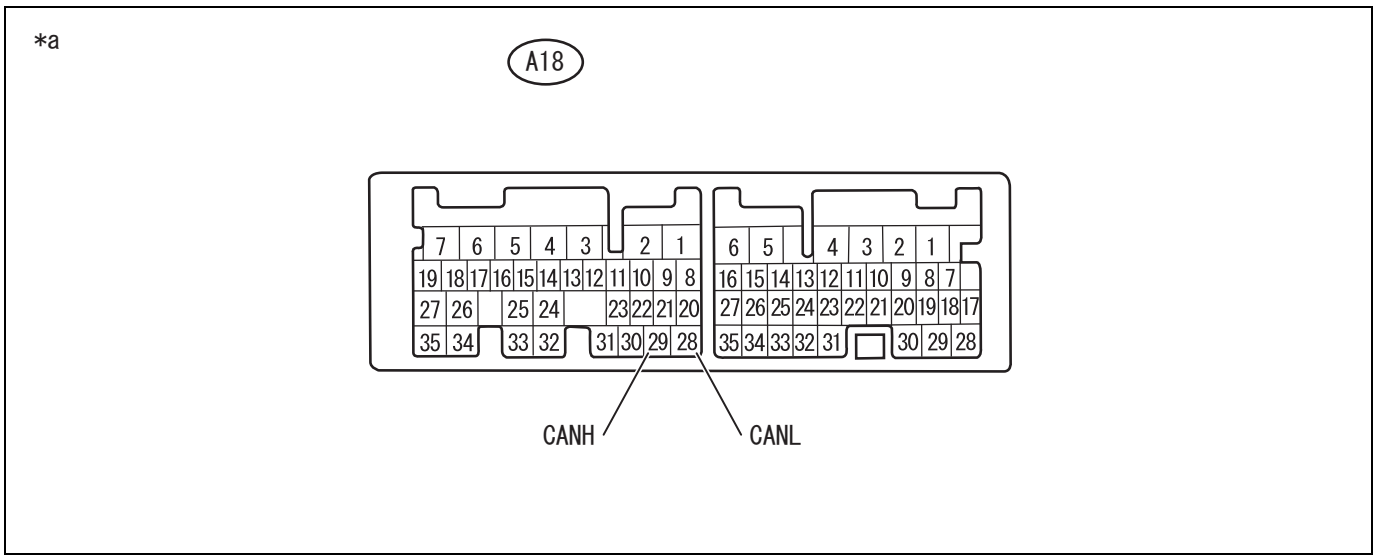

Captions in illustration

*a	Connector not connected (Transmission control computer ASSY)	-	-

Terminal No.	terminal symbol
A18-29	-
A18-28	-

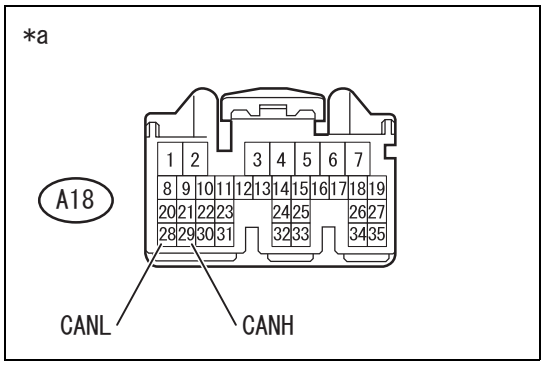

(2) Inspection of vehicle harness of transmission control computer ASSY (Vbus sub-line)
   (a) Disconnect the battery ground terminal, and then disconnect the vehicle harness connector A18 from the transmission control computer ASSY.
   (b) Measure the resistance between the terminals.

Resistance

Vbus sub-line

Inspection terminals	Inspection conditions	Standard value
A18-29←→A18-28	Disconnection of the battery ground terminal	57 to 63 Ω
A18-29←→GND	Disconnection of the battery ground terminal	200 Ωor more
A18-28←→GND	Disconnection of the battery ground terminal	200 Ωor more
A18-29←→+B	Disconnection of the battery ground terminal	6 kΩ or more
A18-28←→+B	Disconnection of the battery ground terminal	6 kΩ or more

Captions in illustration

*a	Front side of vehicle wiring harness connector (Transmission control computer ASSY)

6. Power steering computer ASSY
   (1) Terminal arrangement

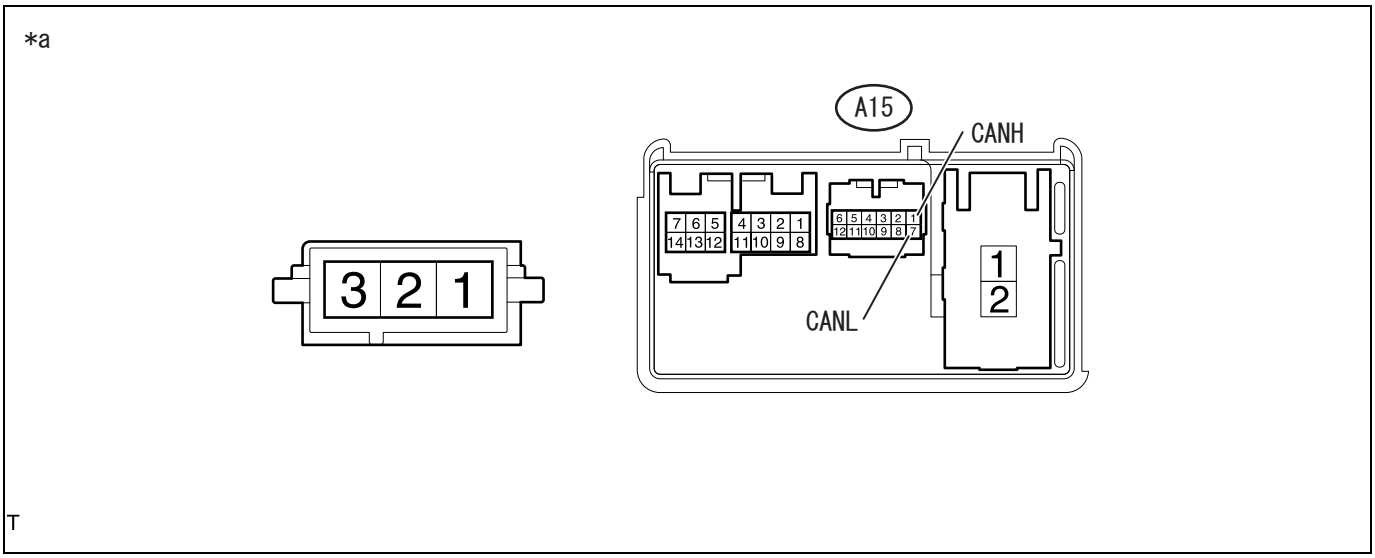

Captions in illustration

*a	Connector not connected (Power steering computer ASSY)	-	-

Terminal No.	terminal symbol
A15-1	-
A15-7	-

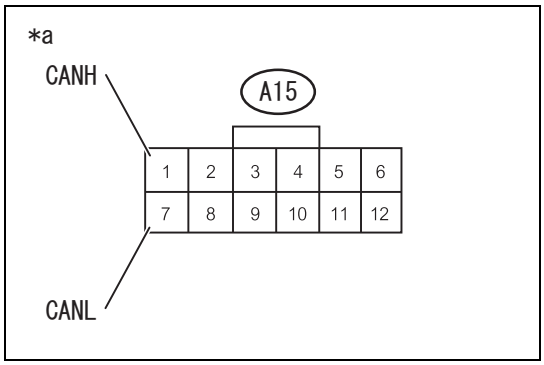

(2) Inspection of vehicle harness of power steering computer ASSY (Vbus sub-line)
   (a)Disconnect the battery ground terminal, and then disconnect the vehicle harness connector A15 from the power steering computer ASSY.
   (b)Measure the resistance between the terminals.

Resistance

Vbus sub-line

Inspection terminals	Inspection conditions	Standard value
A15-1←→A15-7	Disconnection of the battery ground terminal	57 to 63 Ω
A15-1←→GND	Disconnection of the battery ground terminal	200 Ωor more
A15-7←→GND	Disconnection of the battery ground terminal	200 Ωor more
A15-1←→+B	Disconnection of the battery ground terminal	6 kΩ or more
A15-7←→+B	Disconnection of the battery ground terminal	6 kΩ or more

Captions in illustration

*a	Front side of vehicle wiring harness connector (Power steering computer ASSY)

7. Combination meter ASSY
   (1) Terminal arrangement

*a

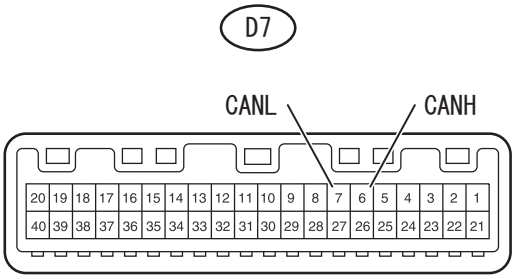

NW

Captions in illustration

*a	Connector not connected (Combination meter ASSY)	-	-

Terminal No.	terminal symbol
D7-6	-
D7-7	-

*a

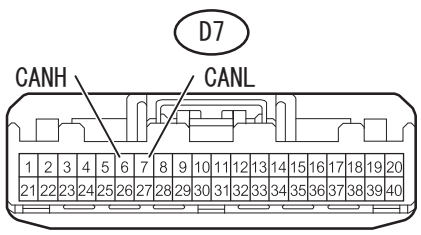

(2) Inspection of vehicle harness of combination meter ASSY (Vbus sub-line)

(a)Disconnect the battery ground terminal, and then disconnect the vehicle harness connector D7 from the combination meter ASSY.

(b)Measure the resistance between the terminals.

Resistance

Vbus sub-line

Inspection terminals	Inspection conditions	Standard value
D7-6←→D7-7	Disconnection of the battery ground terminal	57 to 63 Ω
D7-6←→GND	Disconnection of the battery ground terminal	200 Ωor more
D7-7←→GND	Disconnection of the battery ground terminal	200 Ωor more
D7-6←→+B	Disconnection of the battery ground terminal	6 kΩ or more
D7-7←→+B	Disconnection of the battery ground terminal	6 kΩ or more

Captions in illustration

*a	Front side of vehicle wiring harness connector (Combination meter ASSY)

8. Main body ECM (Multiplex network body computer)

(1) Terminal arrangement

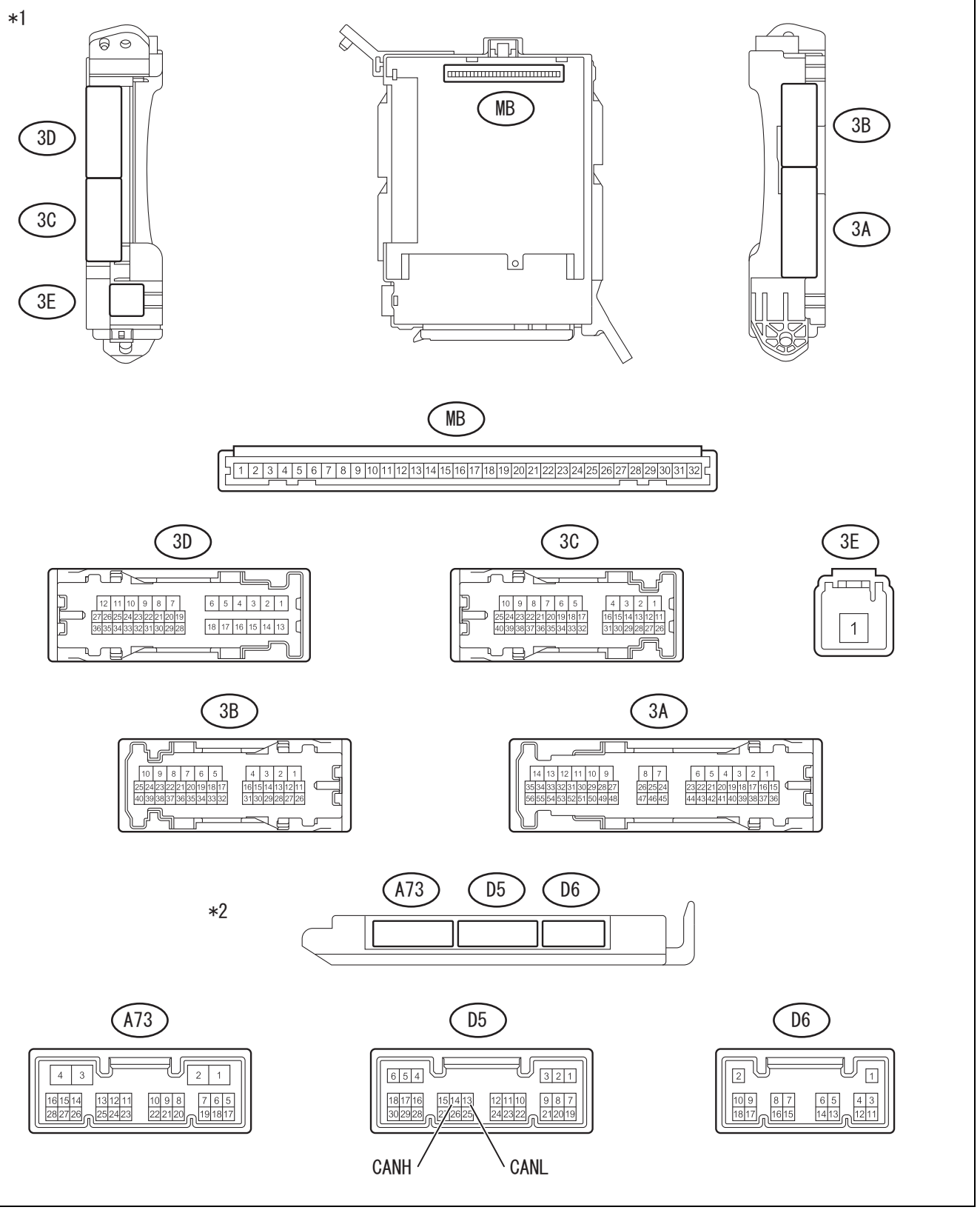

H

Captions in illustration

*1	Instrument panel junction block ASSY	*2	Main body ECM (Multiplex network body computer)

Terminal No.	terminal symbol
D5-14	-

Terminal No.	terminal symbol
D5-13	-

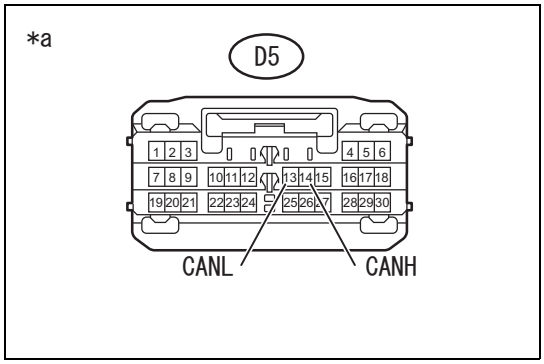

(2) Inspection of vehicle harness of main body ECM (Multiplex network body computer) (Vbus sub-line)

(a)Disconnect the battery ground terminal, and then disconnect the vehicle harness connector D5 from the main body ECM (Multiplex network body computer).

(b)Measure the resistance between the terminals.

Resistance

Vbus sub-line

Inspection terminals	Inspection conditions	Standard value
D5-14←→D5-13	Disconnection of the battery ground terminal	57 to 63 Ω
D5-14←→GND	Disconnection of the battery ground terminal	200 Ωor more
D5-13←→GND	Disconnection of the battery ground terminal	200 Ωor more
D5-14←→+B	Disconnection of the battery ground terminal	6 kΩ or more
D5-13←→+B	Disconnection of the battery ground terminal	6 kΩ or more

Captions in illustration

*a	Front side of vehicle wiring harness connector (Main body ECM (Multiplex network body computer))

9. Collation ECM (Smart key computer ASSY) (with smart entry)

(1) Terminal arrangement

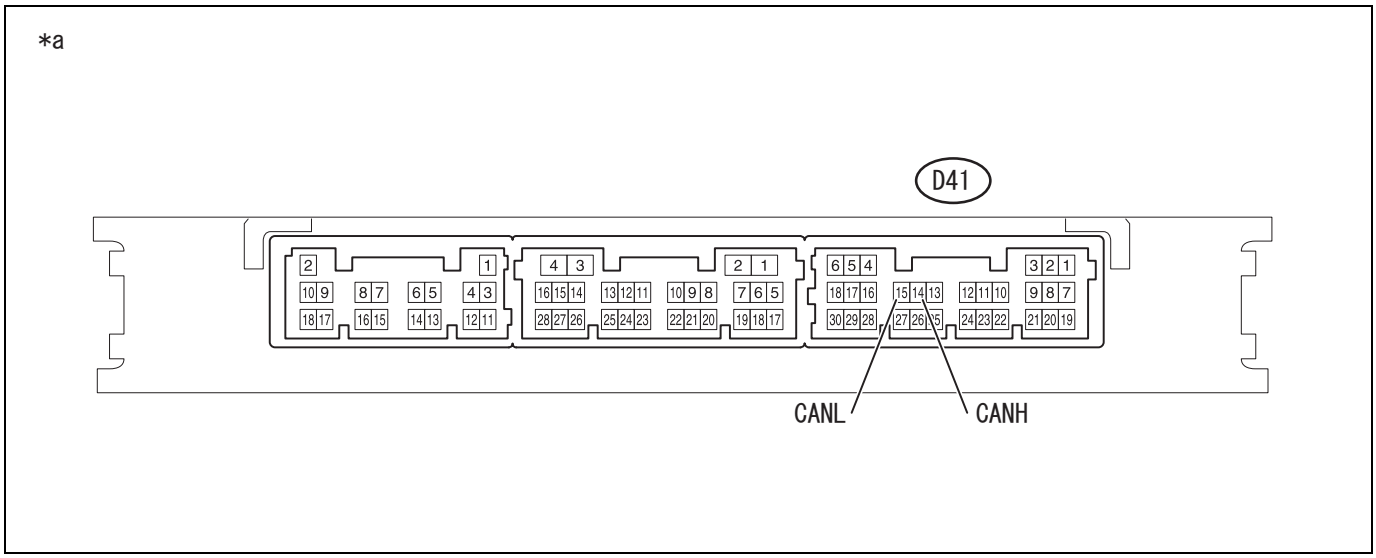

Captions in illustration

*a	Connector not connected (Collation ECM (Smart key computer ASSY))	-	-

Terminal No.	terminal symbol
D41-14	-
D41-15	-

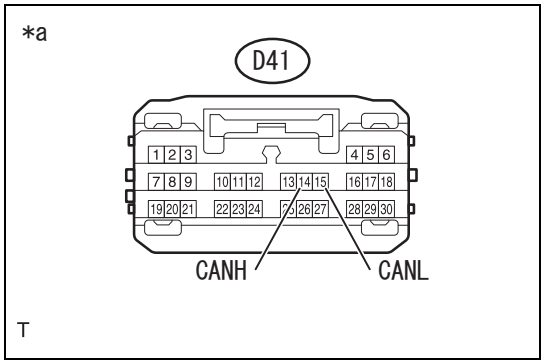

(2) Inspection of vehicle harness of collation ECM (Smart key computer ASSY) (Vbus sub-line)

(a) Disconnect the battery ground terminal, and then disconnect the vehicle harness connector D41 from the collation ECM (Smart key computer ASSY).

(b) Measure the resistance between the terminals.

Resistance

Vbus sub-line

Inspection terminals	Inspection conditions	Standard value
D41-14←→D41-15	Disconnection of the battery ground terminal	57 to 63 Ω
D41-14←→GND	Disconnection of the battery ground terminal	200 Ωor more
D41-15←→GND	Disconnection of the battery ground terminal	200 Ωor more
D41-14←→+B	Disconnection of the battery ground terminal	6 kΩ or more
D41-15←→+B	Disconnection of the battery ground terminal	6 kΩ or more

Captions in illustration

*a	Front side of vehicle wiring harness connector (Collation ECM (Smart key computer ASSY))

10. Spiral cable SUB-ASSY (with sensor)

(1) Terminal arrangement

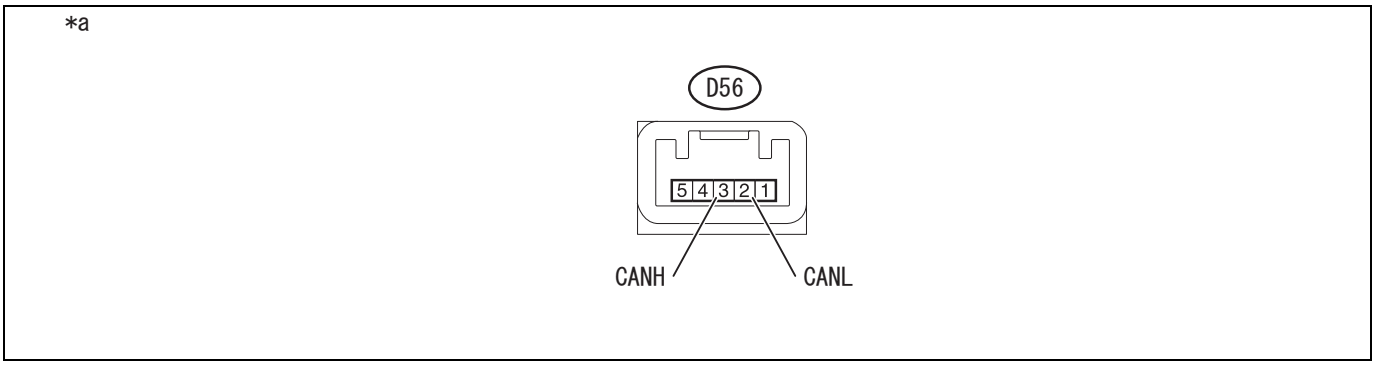

Captions in illustration

*a	Connector not connected (Spiral cable SUB-ASSY (with sensor))	-	-

Terminal No.	terminal symbol
D56-3	-
D56-2	-

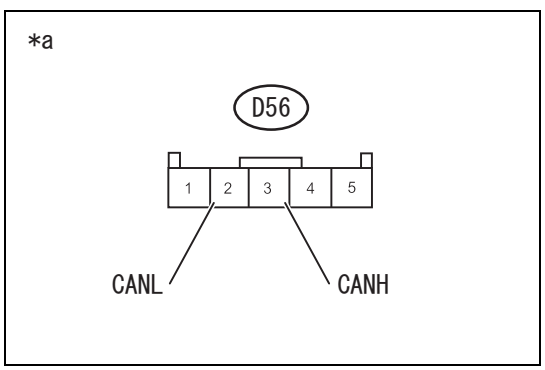

(2) Inspection of vehicle harness of spiral cable SUB-ASSY (with sensor) (Vbus sub-line)

(a) Disconnect the battery ground terminal, and then disconnect the vehicle harness connector D56 from the spiral cable SUB-ASSY (with sensor).

(b) Measure the resistance between the terminals.

Resistance

Vbus sub-line

Inspection terminals	Inspection conditions	Standard value
D56-3←→D56-2	Disconnection of the battery ground terminal	57 to 63 Ω
D56-3←→GND	Disconnection of the battery ground terminal	200 Ωor more
D56-2←→GND	Disconnection of the battery ground terminal	200 Ωor more

Inspection terminals	Inspection conditions	Standard value
D56-3←→+B	Disconnection of the battery ground terminal	6 kΩ or more
D56-2←→+B	Disconnection of the battery ground terminal	6 kΩ or more

Captions in illustration

*a	Front side of vehicle wiring harness connector (Spiral cable SUB-ASSY (with sensor))

*a

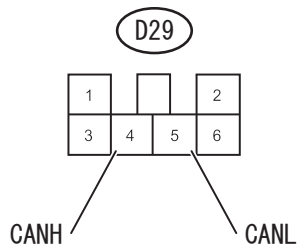

11. PSP (Accessory bus buffer)
    (1) Inspection of PSP (Accessory bus buffer) (Vbus sub-line)
        (a)Disconnect the battery ground terminal.
        (b)Measure the resistance between the terminals.

Resistance

Vbus sub-line

Inspection terminals	Inspection conditions	Standard value
D29-4←→D29-5	Disconnection of the battery ground terminal	57 to 63 Ω
D29-4←→GND	Disconnection of the battery ground terminal	200 Ωor more
D29-5←→GND	Disconnection of the battery ground terminal	200 Ωor more
D29-4←→+B	Disconnection of the battery ground terminal	6 kΩ or more
D29-5←→+B	Disconnection of the battery ground terminal	6 kΩ or more

Captions in illustration

*a	Front side of vehicle wiring harness connector (PSP (Accessory bus buffer))

12. Airbag sensor ASSY
    (1) Terminal arrangement

*a

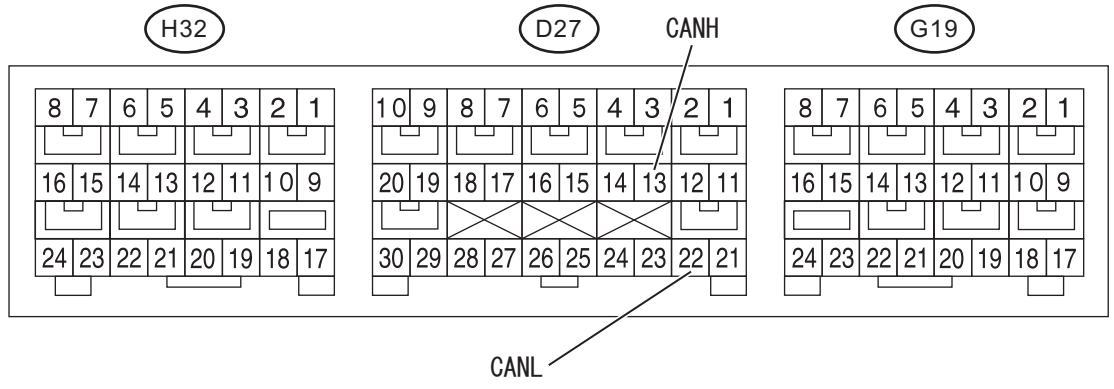

LAN12052

Captions in illustration

*a	Connector not connected (Airbag sensor ASSY)	-	-

Terminal No.	terminal symbol
D27-13	-
D27-22	-

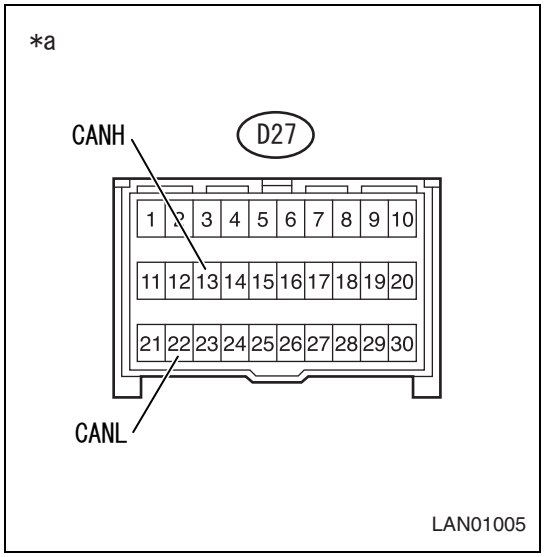

(2) Inspection of vehicle harness of airbag sensor ASSY (Vbus sub-line)

(a) Disconnect the battery ground terminal, and then disconnect the vehicle harness connector D27 from the airbag sensor ASSY.

(b) Measure the resistance between the terminals.

Resistance

Vbus sub-line

Inspection terminals	Inspection conditions	Standard value
D27-13←→D27-22	Disconnection of the battery ground terminal	57 to 63 Ω
D27-13←→GND	Disconnection of the battery ground terminal	200 Ωor more
D27-22←→GND	Disconnection of the battery ground terminal	200 Ωor more
D27-13←→+B	Disconnection of the battery ground terminal	6 kΩ or more
D27-22←→+B	Disconnection of the battery ground terminal	6 kΩ or more

Captions in illustration

*a	Front side of vehicle wiring harness connector (Airbag sensor ASSY)

13. Air conditioner amplifier ASSY (Automatic air conditioning system)

(1) Terminal arrangement

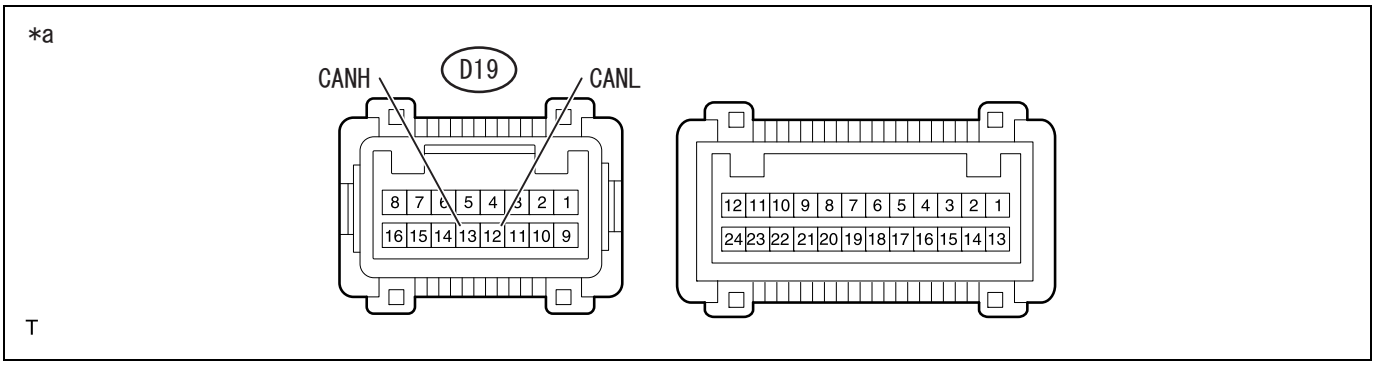

Captions in illustration

*a	Connector not connected (Air conditioner amplifier ASSY)	-	-

Terminal No.	terminal symbol
D19-13	-
D19-12	-

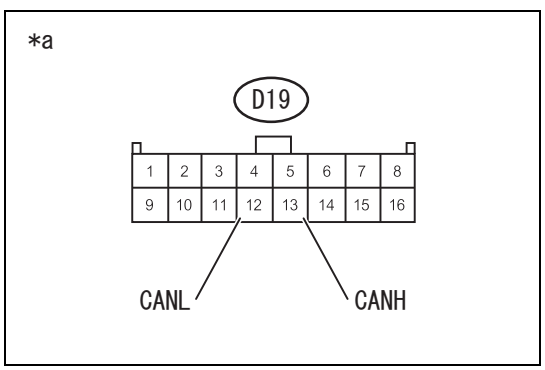

(2) Inspection of vehicle harness of air conditioner amplifier ASSY (Vbus sub-line)

(a) Disconnect the battery ground terminal, and then disconnect the vehicle harness connector D19 from the air conditioner amplifier ASSY.

(b) Measure the resistance between the terminals.

Resistance

Vbus sub-line

Inspection terminals	Inspection conditions	Standard value
D19-13←→D19-12	Disconnection of the battery ground terminal	57 to 63 Ω
D19-13←→GND	Disconnection of the battery ground terminal	200 Ωor more
D19-12←→GND	Disconnection of the battery ground terminal	200 Ωor more

Inspection terminals	Inspection conditions	Standard value
D19-13←→+B	Disconnection of the battery ground terminal	6 kΩ or more
D19-12←→+B	Disconnection of the battery ground terminal	6 kΩ or more

Captions in illustration

*a	Front side of vehicle wiring harness connector (Air conditioner amplifier ASSY)

14. Brake actuator ASSY

(1) Terminal arrangement

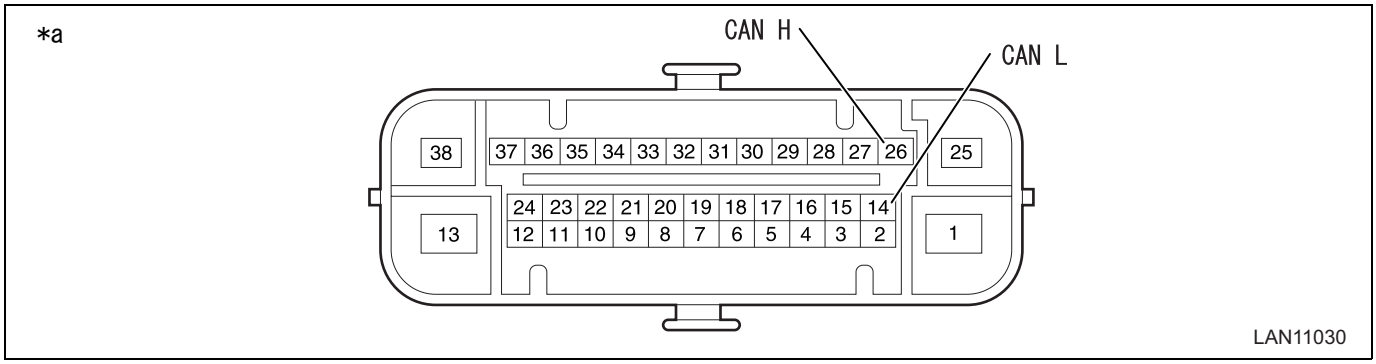

Captions in illustration

*a	Connector not connected (Brake actuator ASSY)	-	-

Terminal No.	terminal symbol
A5-26	-
A5-14	-

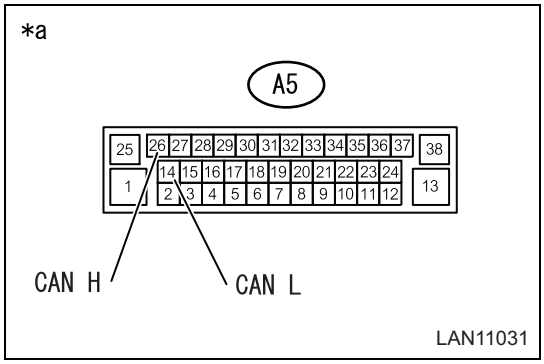

(2) Inspection of vehicle harness of brake actuator ASSY (Vbus main line)

(a)Disconnect the battery ground terminal, and then disconnect the vehicle harness connector A5 from the brake actuator ASSY.

(b)Measure the resistance between the terminals.

Resistance

Vbus main line

Inspection terminals	Inspection conditions	Standard value
A5-26←→A5-14	Disconnection of the battery ground terminal	114 to 126 Ω
A5-26←→GND	Disconnection of the battery ground terminal	200 Ωor more
A5-14←→GND	Disconnection of the battery ground terminal	200 Ωor more
A5-26←→+B	Disconnection of the battery ground terminal	6 kΩ or more
A5-14←→+B	Disconnection of the battery ground terminal	6 kΩ or more

Captions in illustration

*a	Front side of vehicle wiring harness connector (Brake actuator ASSY)

Failsafe list

1. Failsafe function

(1) If a failure occurs on any of the bus (communication line) due to short circuit and other reasons, the fail safe function switches the process on the defective bus to a predefined bus to protect against malfunction.

(2) Behavior of each system in case of lost communication (For details, refer to the description of each system)

Function	Control master (Main ECM that controls the process)	Relevant ECMs	Behavior in case of lost communication	Notification to driver	Notification method	Diagnostic codes ([ECM which saves DTC])
Speed display (Display the data on speedmeter based on vehicle speed signal sent by the brake actuator ASSY)	Combination meter ASSY	Brake actuator ASSY	Assume the input signal indicates 0 km/h	Yes	• Display 0 km/h on the speed meter • Stop the driving monitor calculation	U0122 [Combination meter ASSY]
Odo/trip meter (Receive vehicle speed signal and display the travel distance)	Combination meter ASSY	Brake actuator ASSY	Stop calculation and continue to display the last data until IG-OFF	No	-	U0122 [Combination meter ASSY]
Tachometer (Receive the engine speed signal and display the data on tachometer)	Combination meter ASSY	Engine control computer	Assume the input signal indicates 0 r/min	Yes	Display 0 r/min on the tachometer	U0100 [Combination meter ASSY]
Airbag (Turn ON/OFF the airbag warning light)	Combination meter ASSY	Airbag sensor ASSY	Assume the input signal indicates "Active"	Yes	Turn ON the airbag warning light	U0151 [Combination meter ASSY]
EPS warning (Turn ON/OFF the EPS warning light)	Combination meter ASSY	Power steering computer ASSY	Assume the input signal indicates "Active"	Yes	Turn ON the EPS warning light	U0131 [Combination meter ASSY]
SLIP warning (Turn ON/OFF the SLIP warning light)	Combination meter ASSY	Brake actuator ASSY	Assume the input signal indicates "Active"	Yes	Turn ON the SLIP warning light	U0122 [Combination meter ASSY]
Smart function (Smart lock/smart unlock/ smart trunk open)	Collation ECM (Smart key computer ASSY)	• Main body ECM (Multiplex network body computer) • Combination meter ASSY	Activate the smart unlock-retry	Yes	• Disable the smart lock/ smart unlock/ smart trunk open • Disable the smart alert (lockout, key theft, key reminder) and disable the key lockout prevention control • Disable the smart illumination	U0140, U0155, U0422 [Collation ECM (Smart key computer ASSY)]
Engine ignition SW light control (Turn ON/OFF the engine ignition switch light)	Collation ECM (Smart key computer ASSY)	Main body ECM (Multiplex network body computer)	• If the engine ignition SW light is ON (with dome light): turn OFF • If DC cut fuse is pulled and the engine ignition SW light is ON (panel light): turn OFF	Yes	• If the engine ignition SW light is ON (with dome light): turn OFF • If DC cut fuse is pulled and the engine ignition SW light is ON (panel light): turn OFF	U0140, U0422 [Collation ECM (Smart key computer ASSY)]
Push button start (Power supply switching)	Collation ECM (Smart key computer ASSY)	• Main body ECM (Multiplex network body computer) • Combination meter ASSY • Engine control computer	-	Yes	Do not display the start operation	U0100, U0140, U0155, U0422 [Collation ECM (Smart key computer ASSY)]

Function	Control master (Main ECM that controls the process)	Relevant ECMs	Behavior in case of lost communication	Notification to driver	Notification method	Diagnostic codes ([ECM which saves DTC])
Electric load control (Idle-up is enabled due to electric load, etc.)	Engine control computer	• Main body ECM (Multiplex network body computer) • Air conditioner amplifier ASSY	Disable idle-up due to electric load, etc.	Yes	Idle speed changes	-
Air conditioner cooperation (Enable idle-up/air conditioner cut control via compressor load)	Engine control computer	Air conditioner amplifier ASSY	Disable the air conditioner cooperation (no idle-up)	Yes	Stop the air conditioner	-
Integrated control (VSC) (By estimating the required driving force (torque) based on the acceleration, control the driving force (torque) characteristics as required to realize stability under constant velocity driving, improve starting, reacceleration, and acceleration)	Engine control computer	• Collation ECM (Smart key computer ASSY) • Brake actuator ASSY • Spiral cable SUB-ASSY • Brake actuator ASSY	Disable the functions to estimate the required driving force (torque) based on the acceleration and control the driving force (torque) characteristics as required to realize stability under constant velocity driving, improve starting, reacceleration, and acceleration	Yes	Disable the functions to estimate the required driving force (torque) based on the acceleration and control the driving force (torque) characteristics as required to realize stability under constant velocity driving, improve starting, reacceleration, and acceleration	-
ECT system indicator display (Display shift, S/W, mode on the meter)	Transmission control computer ASSY	Combination meter ASSY	Disable the indicators	Yes	Indicators are OFF	-
AI-SHIFT control (Automatic transmission control to improve engine braking force and acceleration)	Transmission control computer ASSY	Brake actuator ASSY	AI-SHIFT control is disabled	No	-	-
N control (Reduce the engine load and activate idle-up)	Transmission control computer ASSY	Brake actuator ASSY	Disable N control	No	-	-
Coast down shift (Switch the coast down speed change point according to air conditioner load)	Transmission control computer ASSY	Air conditioner amplifier ASSY	Coast down shock becomes more apparent	No	-	-
Shift-up delay due to heating request (Activate the shift-up delay due to heating request)	Transmission control computer ASSY	Air conditioner amplifier ASSY	Shift-up delay due to heating request is disabled	No	-	-
ABS/VSC/TRC control (Anti-wheel-lock in sudden braking) (Improve stability of the vehicle to protect against skidding while turning and wheel slip when starting the vehicle)	Brake actuator ASSY	• Engine control computer • Spiral cable SUB-ASSY • Airbag sensor ASSY	ABS/VSC/TRC control is disabled	Yes	• Brake warning light is ON • ABS warning light is ON • Slip indicator light is ON	U0100 U0126 [Brake actuator ASSY]
EPS control (Adaptive torque control in response to vehicle speed)	Power steering computer ASSY	Engine control computer	Assist stops or degraded (steering wheel becomes heavy)	Yes	-	U0100 [Power steering computer ASSY]
		Brake actuator ASSY			ESP indicator is ON	U0122 U0416 [Power steering computer ASSY]

Function	Control master (Main ECM that controls the process)	Relevant ECMs	Behavior in case of lost communication	Notification to driver	Notification method	Diagnostic codes ([ECM which saves DTC])
Air conditioner control (Water temperature correction control)	Air conditioner amplifier ASSY	Engine control computer	• Temperature information (IG ON): use the default value (80°C) • Engine type (IG ON): use the default value (depends on the model) • IG-OFF: none	No	-	U0100 U0401 [Air conditioner amplifier ASSY]
Simple load control (Restrict the simple electric load control depending on load control level)	Air conditioner amplifier ASSY	Power steering computer ASSY	• The last data is retained while IG-ON (if reset, the load control is disabled) • IG-OFF: none	No	-	U0100 U0401 [Air conditioner amplifier ASSY]
Panel dimmer control (A/C control pattern switch, HCAV control switch, indicator dimmer control)	Air conditioner amplifier ASSY	Main body ECM (Multiplex network body computer)	• The last data is retained while IG-ON (if reset, the load control is disabled) • IG-OFF: none	Yes	Rear defroster switch is disabled	U0140 U0422 [Air conditioner amplifier ASSY]
Destination identification control (Identify the destination)	Air conditioner amplifier ASSY	Main body ECM (Multiplex network body computer)	• The last data is retained while IG-ON • IG-OFF: none	Yes	Rear defroster switch is disabled	U0140 U0422 [Air conditioner amplifier ASSY]
Ambient temperature correction control (Switch the operation status of air conditioner and correct the ambient temperature display value based on the vehicle signal)	Air conditioner amplifier ASSY	Combination meter ASSY	• SPD (IG ON): control using the default value (0 km) • IG-OFF: none	No	• The consistency between the ambient temperature and the display value is reduced • The level of A/C air flow volume correction goes down	U0155 U0423 [Air conditioner amplifier ASSY]
Event data recorder (EDR) (If EDR record criteria is met, the status data regarding the vehicle speed, accelerator pedal opening angle, and shift position is logged)	Airbag sensor ASSY	• Brake actuator ASSY • Engine control computer	"Invalid data" is logged in the event data recorder (EDR)	No	-	-

Sub-lines 57-63 Ω(Transmission control computer ASSY system)

Description of functions

Diagnostic items	Symptoms	Possible cause
Sub-lines 57-63 Ω(DTC detected on the transmission control computer ASSY system)	Perform inspection if missing data or data error is detected. The cause of malfunction is not a short to the power supply or ground.	• Transmission control computer ASSY, open circuit in sub-line or connector defect • Transmission control computer ASSY, power supply system defect • Transmission control computer ASSY, internal error

Circuit figure

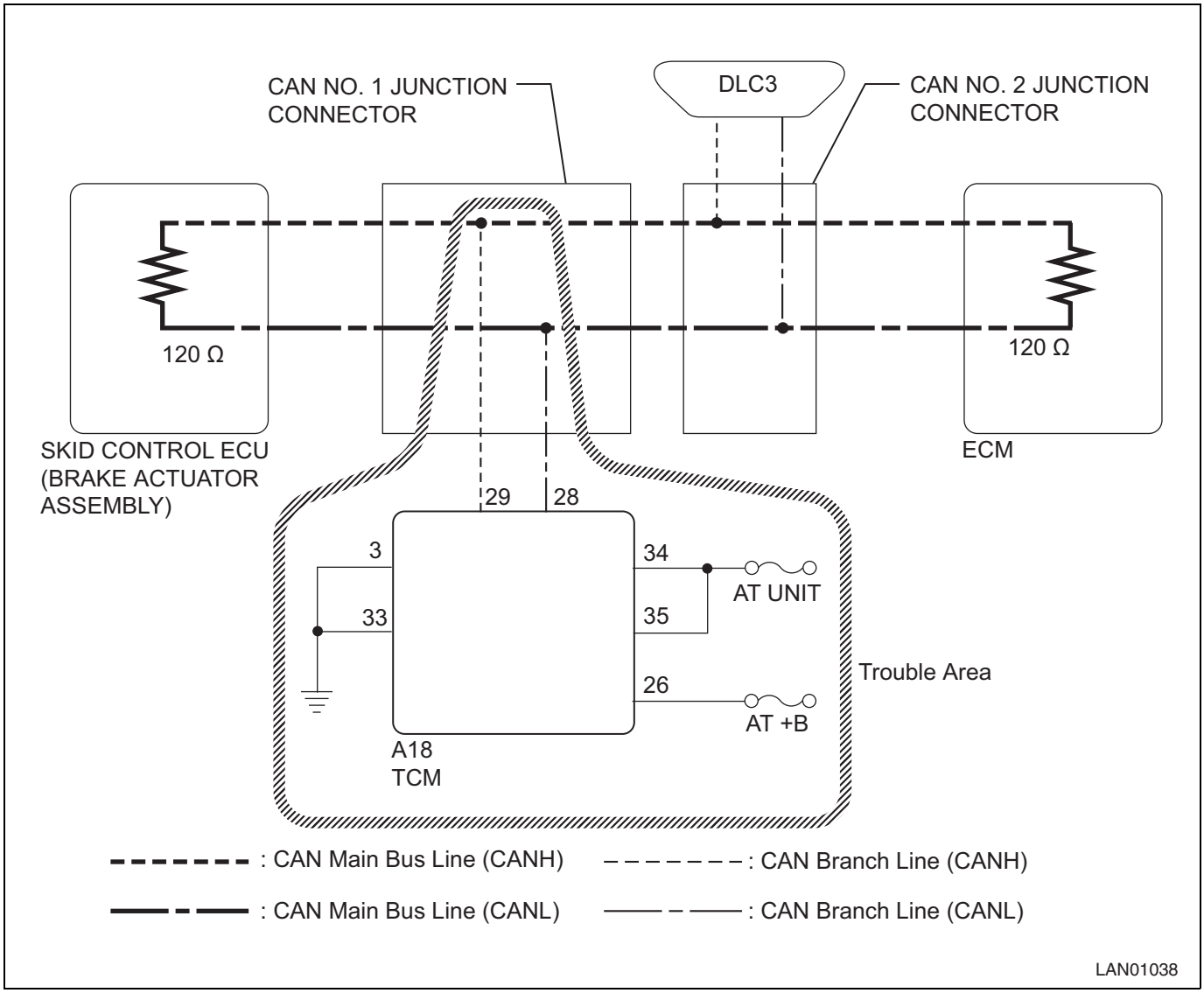

Inspection steps

CAUTION:

- Before measuring the resistance of CAN bus, turn the ignition OFF and leave the vehicle as is for at least one minute without operating keys, switches, and doors. Disconnect the battery and wait for another one minute or more.
- If DTC related with CAN communication system is output, always start the troubleshooting according to the procedure described in "How to troubleshoot". (Refer to NW - 30)
- When the repair is complete, follow DTC check procedure to confirm the same DTC does not recur.
  DTC check procedure: wait 60 seconds or more after IG ON
- After turning the ignition switch to OFF, you may have to wait for a while before disconnecting the battery terminals. Check appropriate precautions for battery terminal disconnection before proceeding. (Refer to IN - 6)
- Before performing troubleshooting, check the fuse for this circuit.

NOTE:

- Before disconnecting a connector, check for loose or unplugged connection by pushing back the connector case.
- After disconnecting the connector, make sure that its terminal and the case have no damage, deformation, or corrosion.

1	Checking for open circuit in CAN bus sub-line (Sub-line to the transmission control computer ASSY)

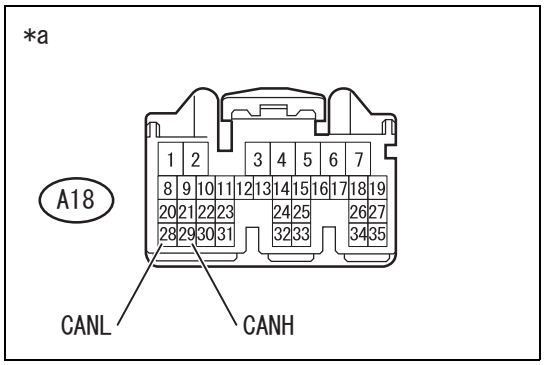

(1) Disconnect the battery ground terminal, and then disconnect the vehicle harness connector A18 from the transmission control computer ASSY.
(2) Measure the resistance between the terminals.

Resistance

Inspection terminals	Inspection conditions	Standard value
A18-29 - A18-28	Disconnection of the battery ground terminal	57 to 63 Ω

Captions in illustration

*a	Front side of vehicle wiring harness connector (Transmission control computer ASSY)

NG → Repair or replacement of CAN bus sub-line or connector

OK

2	Checking of the wiring harness and connector (Power supply system)

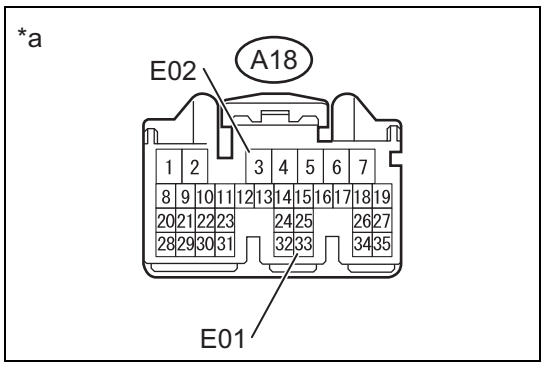

(1) Measure the resistance between the terminals.

Resistance

Inspection terminals	Inspection conditions	Standard value
A18-3 - chassis ground	Disconnection of the battery ground terminal	Less than 1 Ω
A18-33 - chassis ground	Disconnection of the battery ground terminal	Less than 1 Ω

Captions in illustration

*a	Front side of vehicle wiring harness connector (Transmission control computer ASSY)

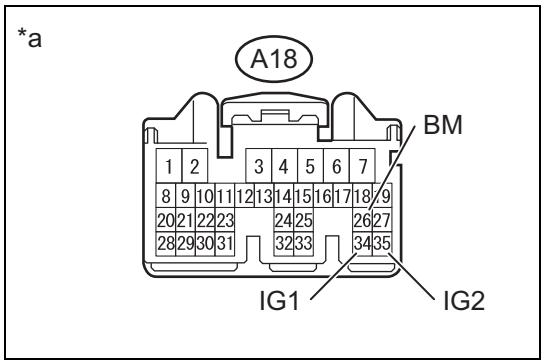

(2) Reconnect the battery ground terminal.
(3) Measure the voltage between the terminals.

Resistance

Inspection terminals	Inspection conditions	Standard value
A18-26 - chassis ground	IG OFF	11 to 14 V
A18-34 - chassis ground	IG ON	11 to 14 V
A18-35 - chassis ground	IG ON	11 to 14 V

Captions in illustration

*a	Front side of vehicle wiring harness connector (Transmission control computer ASSY)

NG → Repair or replacement of wiring harness or connector

OK

Replacement of the transmission control computer ASSY (Refer to AT - 322)

Sub-lines 57-63 Ω(Brake actuator system)

Description of functions

Diagnostic items	Symptoms	Possible cause
Sub-lines 57-63 Ω(DTC detected on VDC system)	Perform inspection if missing data or data error is detected. The cause of malfunction is not a short to the power supply or ground.	• Brake actuator ASSY, open circuit in sub-line or connector defect • Brake actuator ASSY, power supply system defect • Brake actuator ASSY, internal error

NW

Circuit figure

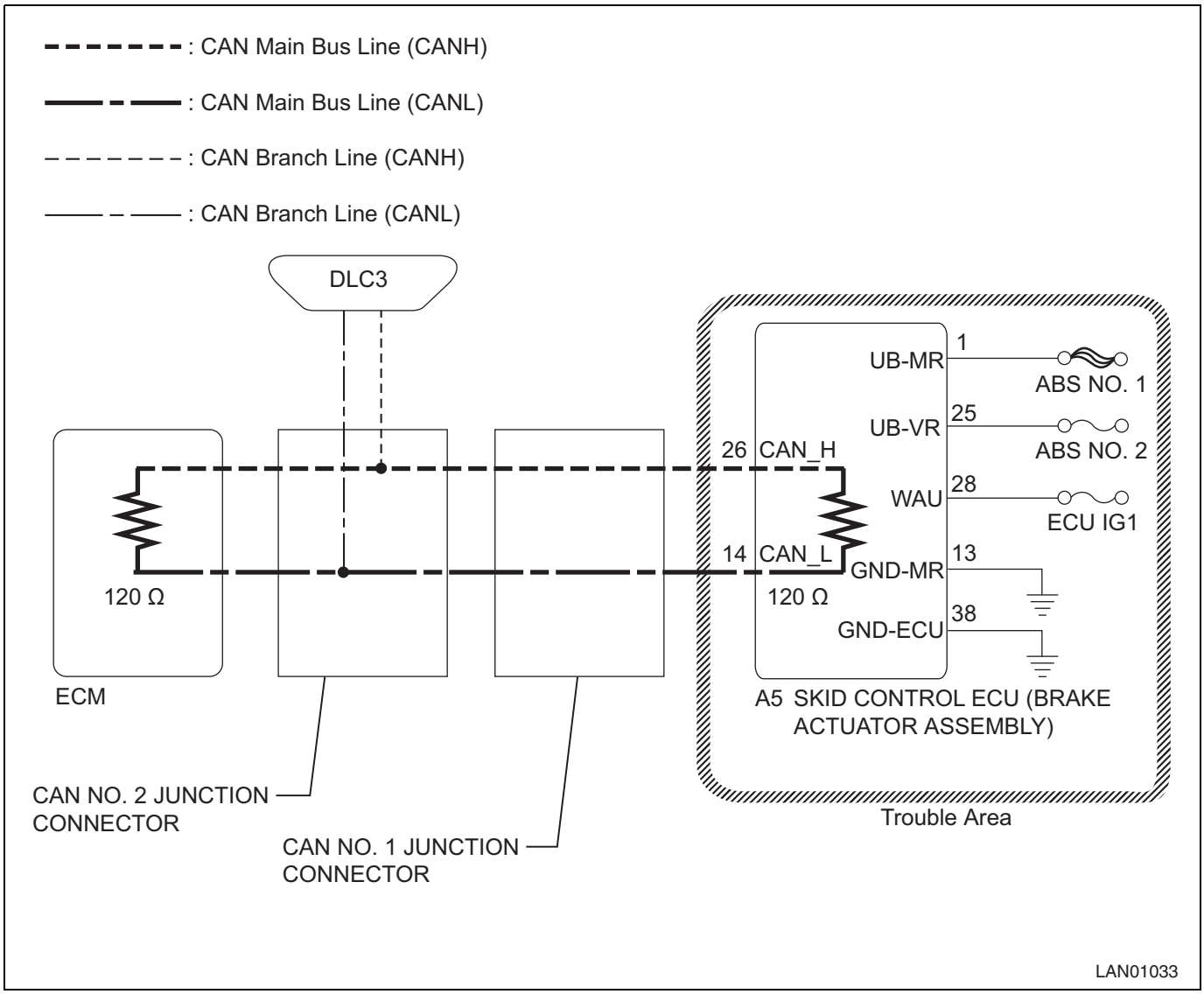

Inspection steps

CAUTION:

- Before measuring the resistance of CAN bus, turn the ignition OFF and leave the vehicle as is for at least one minute without operating keys, switches, and doors. Disconnect the battery and wait for another one minute or more.
- If DTC related with CAN communication system is output, always start the troubleshooting according to the procedure described in "How to troubleshoot". (Refer to NW - 30)
- When the repair is complete, follow DTC check procedure to confirm the same DTC does not recur.
  DTC check procedure: Wait 60 seconds or more after IG ON, then drive the vehicle at 15 km/h or more for at least one second.
- After turning the ignition switch to OFF, you may have to wait for a while before disconnecting the battery terminals. Check appropriate precautions for battery terminal disconnection before proceeding. (Refer to IN - 6)
- Before performing troubleshooting, check the fuse for this circuit.

NOTE:

- Before disconnecting a connector, check for loose or unplugged connection by pushing back the connector case.
- After disconnecting the connector, make sure that its terminal and the case have no damage, deformation, or corrosion.

NW

1	Checking for open circuit in CAN bus main line (Main line to the brake actuator ASSY)

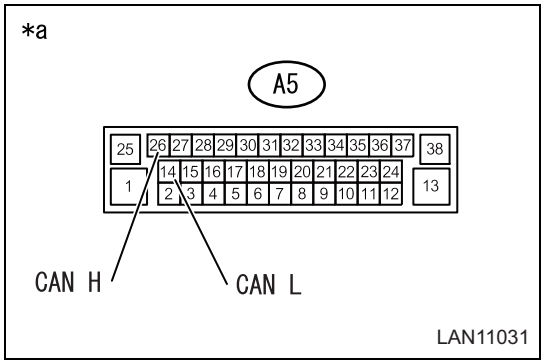

(1) Disconnect the battery ground terminal, and then disconnect the vehicle harness connector A5 from the brake actuator ASSY.

(2) Measure the resistance between the terminals.

Resistance

Inspection terminals	Inspection conditions	Standard value
A5-26 - A5-14	Disconnection of the battery ground terminal	114 to 126 Ω

Captions in illustration

*a	Front side of vehicle wiring harness connector (Brake actuator ASSY)

NG → Repair or replacement of CAN bus main line

OK

2	Checking of the wiring harness and connector (Power supply system)

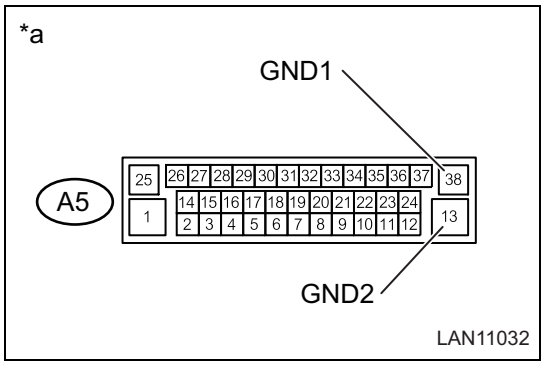

(1) Measure the resistance between the terminals.
Resistance

Inspection terminals	Inspection conditions	Standard value
A5-13 - chassis ground	Disconnection of the battery ground terminal	Less than 1 Ω
A5-38 - chassis ground	Disconnection of the battery ground terminal	Less than 1 Ω

Captions in illustration

*a	Front side of vehicle wiring harness connector (Brake actuator ASSY)

(2) Reconnect the battery ground terminal.

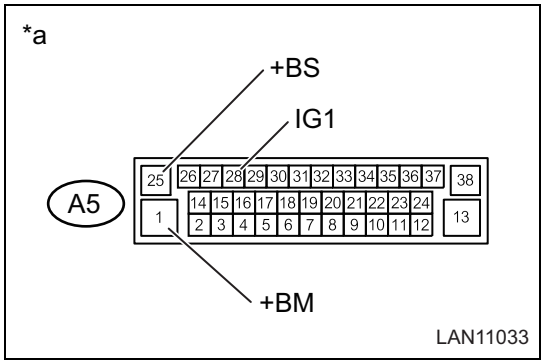

(3) Measure the voltage between the terminals.
Voltage

Inspection terminals	Inspection conditions	Standard value
A5-1 - chassis ground	IG OFF	11 to 14 V
A5-25 - chassis ground	IG OFF	11 to 14 V
A5-28 - chassis ground	IG ON	11 to 14 V

Captions in illustration

*a	Front side of vehicle wiring harness connector (Brake actuator ASSY)

NG → Repair or replacement of wiring harness or connector

OK

Replacement of the brake actuator ASSY (Refer to BC - 93)

Sub-lines 57-63 Ω(Spiral cable SUB-ASSY system)

Description of functions

Diagnostic items	Symptoms	Possible cause
Sub-lines 57-63 Ω(DTC detected on the spiral cable SUB-ASSY system)	Perform inspection if missing data or data error is detected. The cause of malfunction is not a short to the power supply or ground.	• Spiral cable SUB-ASSY (with sensor), open circuit in sub-line or connector defect • Spiral cable SUB-ASSY (with sensor), power supply system defect • Spiral cable SUB-ASSY (with sensor), internal error

Circuit figure

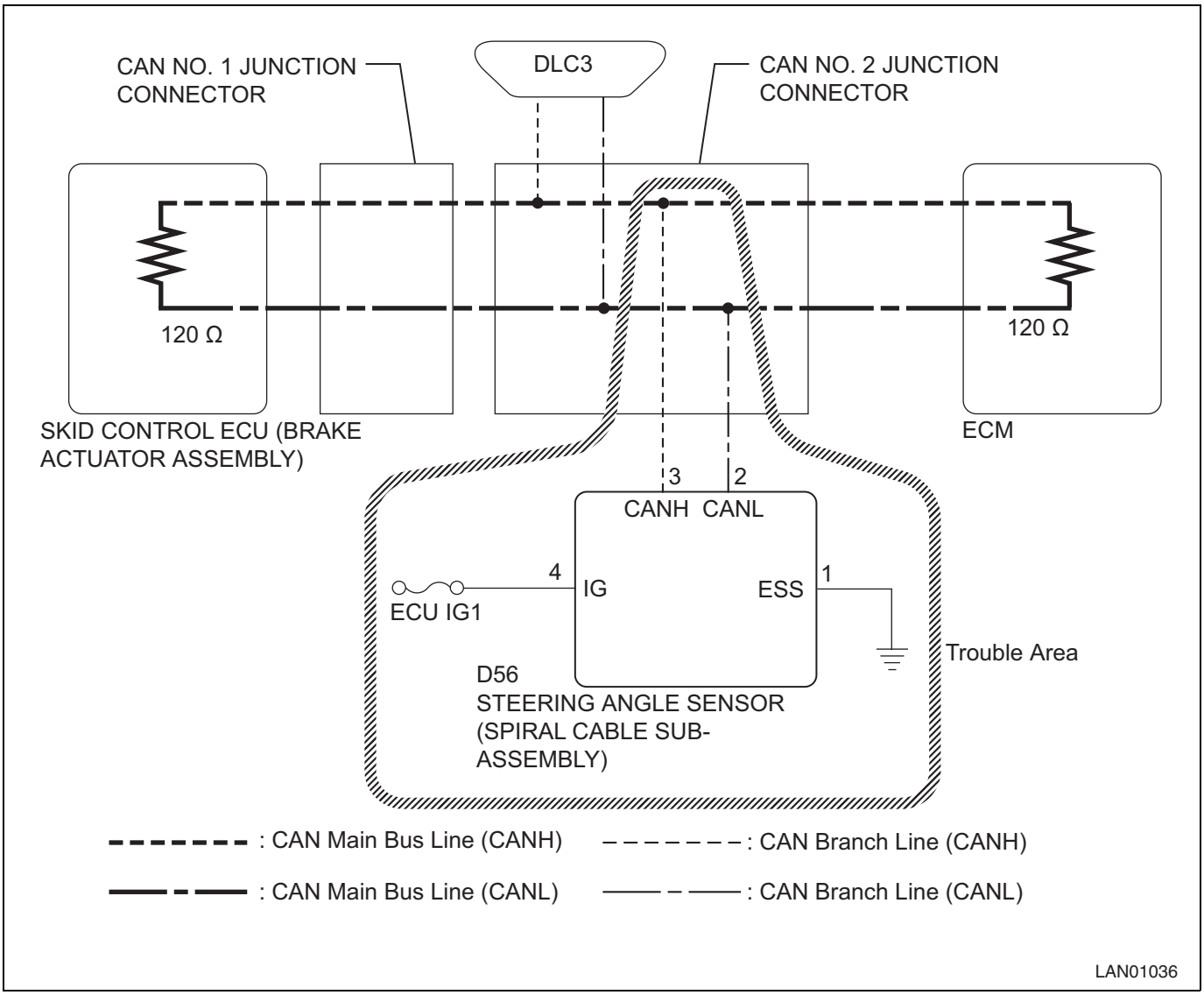

Inspection steps

CAUTION:

- Before measuring the resistance of CAN bus, turn the ignition OFF and leave the vehicle as is for at least one minute without operating keys, switches, and doors. Disconnect the battery and wait for another one minute or more.
- If DTC related with CAN communication system is output, always start the troubleshooting according to the procedure described in "How to troubleshoot". (Refer to NW - 30)
- When the repair is complete, follow DTC check procedure to confirm the same DTC does not recur.
  DTC check procedure: wait 2 seconds or more after IG ON
- After turning the ignition switch to OFF, you may have to wait for a while before disconnecting the battery terminals. Check appropriate precautions for battery terminal disconnection before proceeding. (Refer to IN - 6)
- Before performing troubleshooting, check the fuse for this circuit.

NOTE:

- Before disconnecting a connector, check for loose or unplugged connection by pushing back the connector case.
- After disconnecting the connector, make sure that its terminal and the case have no damage, deformation, or corrosion.

1	Checking for an open circuit in CAN bus sub-line (Sub-line to the spiral cable SUB-ASSY (with sensor))

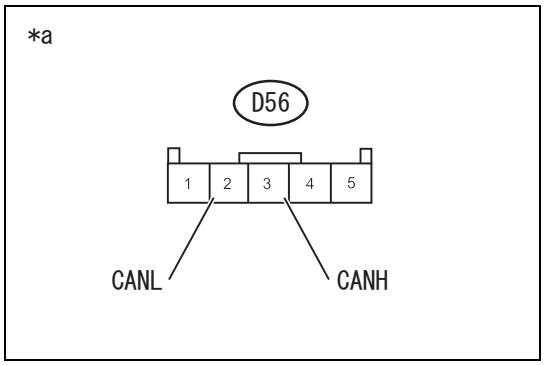

(1) Disconnect the battery ground terminal, and then disconnect the vehicle harness connector D56 from the spiral cable SUB-ASSY (with sensor).
(2) Measure the resistance between the terminals.

Resistance

Inspection terminals	Inspection conditions	Standard value
D56-3 - D56-2	Disconnection of the battery ground terminal	57 to 63 Ω

Captions in illustration

*a	Front side of vehicle wiring harness connector (Spiral cable SUB-ASSY (with sensor))

NG → Repair or replacement of CAN bus sub-line or connector

OK

2	Checking of the wiring harness and connector (Power supply system)

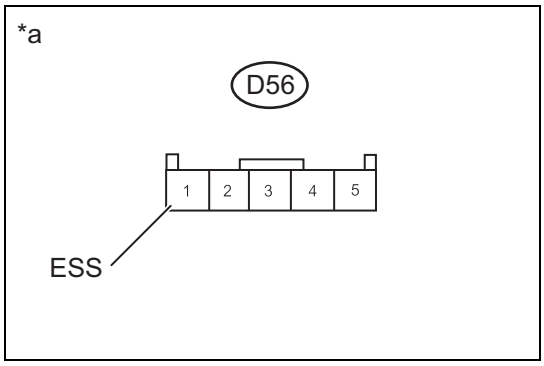

(1) Measure the resistance between the terminals.

Resistance

Inspection terminals	Inspection conditions	Standard value
D56-1 - chassis ground	Disconnection of the battery ground terminal	Less than 1 Ω

Captions in illustration

*a	Front side of vehicle wiring harness connector (Spiral cable SUB-ASSY (with sensor))

(2) Reconnect the battery ground terminal.

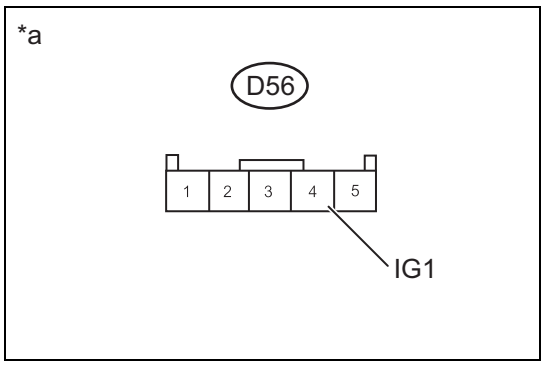

(3) Measure the voltage between the terminals.

Voltage

Inspection terminals	Inspection conditions	Standard value
D56-4 - chassis ground	IG ON	11 to 14 V

Captions in illustration

*a	Front side of vehicle wiring harness connector (Spiral cable SUB-ASSY (with sensor))

NG → Repair or replacement of wiring harness or connector

OK

Replacement of the spiral cable SUB-ASSY (with sensor) (Refer to SR - 54)

Sub-lines 57-63 Ω(Engine control computer system)

Description of functions

Diagnostic items	Symptoms	Possible cause
Sub-lines 57-63 Ω(DTC detected on ECM system)	Perform inspection if missing data or data error is detected. The cause of malfunction is not a short to the power supply or ground.	• Engine control computer, open circuit in the main line or connector defect • Engine control computer, power supply system defect • Engine control computer, internal error

Circuit figure

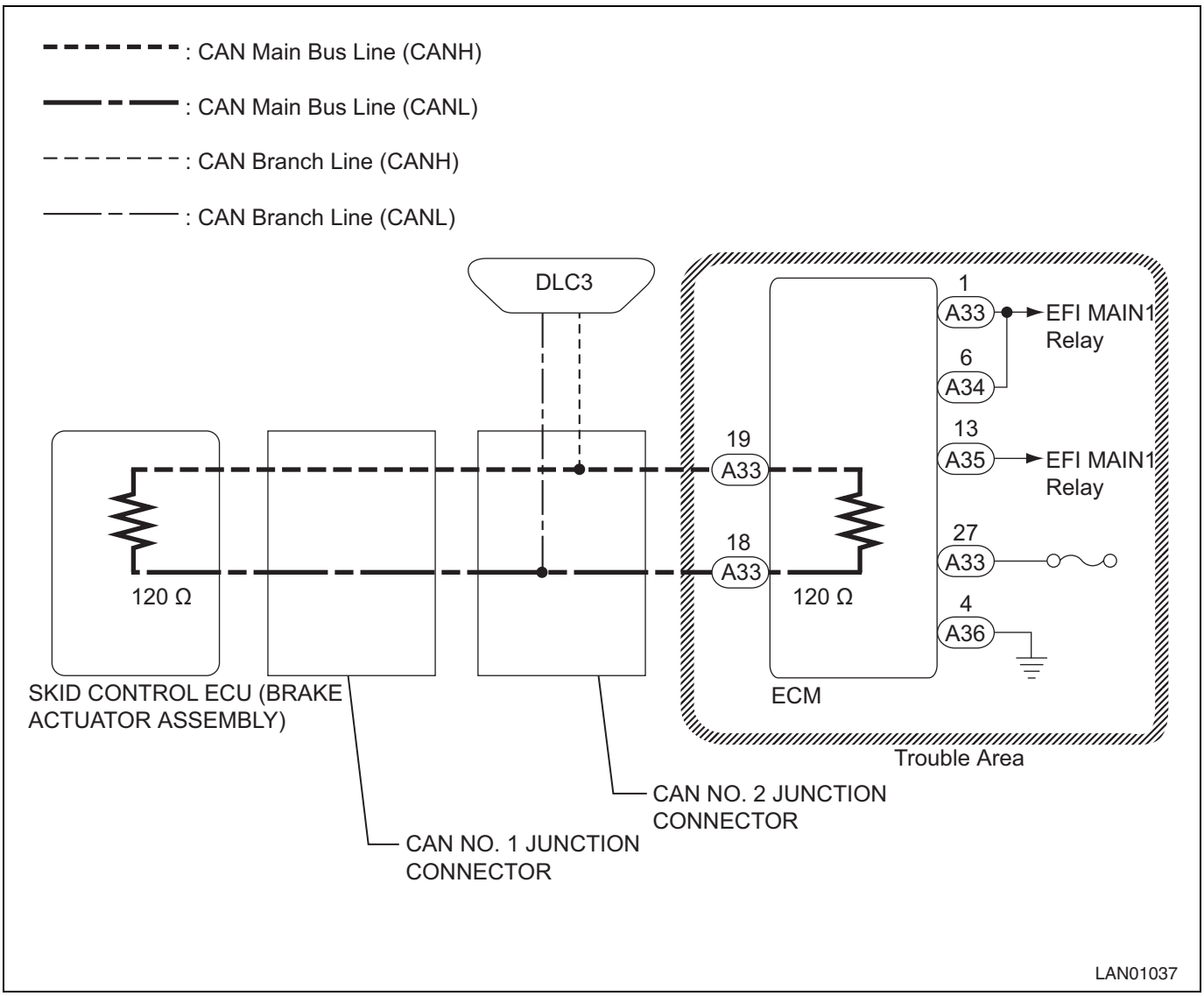

Inspection steps

CAUTION:

- Before measuring the resistance of CAN bus, turn the ignition OFF and leave the vehicle as is for at least one minute without operating keys, switches, and doors. Disconnect the battery and wait for another one minute or more.
- If DTC related with CAN communication system is output, always start the troubleshooting according to the procedure described in "How to troubleshoot". (Refer to NW - 30)
- When the repair is complete, follow DTC check procedure to confirm the same DTC does not recur.
  DTC check procedure: wait 2 seconds or more after IG ON

- After turning the ignition switch to OFF, you may have to wait for a while before disconnecting the battery terminals. Check appropriate precautions for battery terminal disconnection before proceeding. (Refer to IN - 6)
- Before performing troubleshooting, check the fuse for this circuit.

NOTE:

- Before disconnecting a connector, check for loose or unplugged connection by pushing back the connector case.
- After disconnecting the connector, make sure that its terminal and the case have no damage, deformation, or corrosion.

1	Checking for open circuit in CAN bus main line (Main line to the engine control computer)

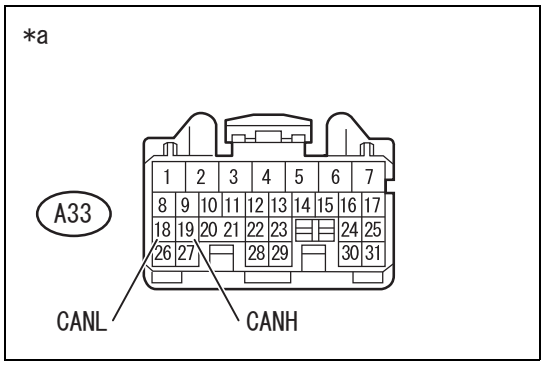

(1) Disconnect the battery ground terminal, and then disconnect the vehicle harness connector A33 from the engine control computer.
(2) Measure the resistance between the terminals.

Resistance

Inspection terminals	Inspection conditions	Standard value
A33-19 - A33-18	Disconnection of the battery ground terminal	114 to 126 Ω

Captions in illustration

*a	Front side of vehicle wiring harness connector (Engine control computer)

NG → Repair or replacement of CAN bus main line or connector

OK

2	Checking of the wiring harness and connector (Power supply system)

(1) Check the power supply system of the engine control computer. (Refer to ES - 642)
NOTE:
If no defect is found in the power supply system of the engine control computer, replace the engine control computer.

NG → Repair or replacement of wiring harness or connector

OK

Replacement of the engine control computer (Refer to ES - 670)

Sub-lines 57-63 Ω(Airbag system)

Description of functions

Diagnostic items	Symptoms	Possible cause
Sub-lines 57-63 Ω(DTC detected on the airbag system)	Perform inspection if missing data or data error is detected. The cause of malfunction is not a short to the power supply or ground.	• Airbag sensor ASSY, open circuit in the sub-line or connector defect • Airbag sensor ASSY, power supply system defect • Airbag sensor ASSY, internal error

Circuit figure

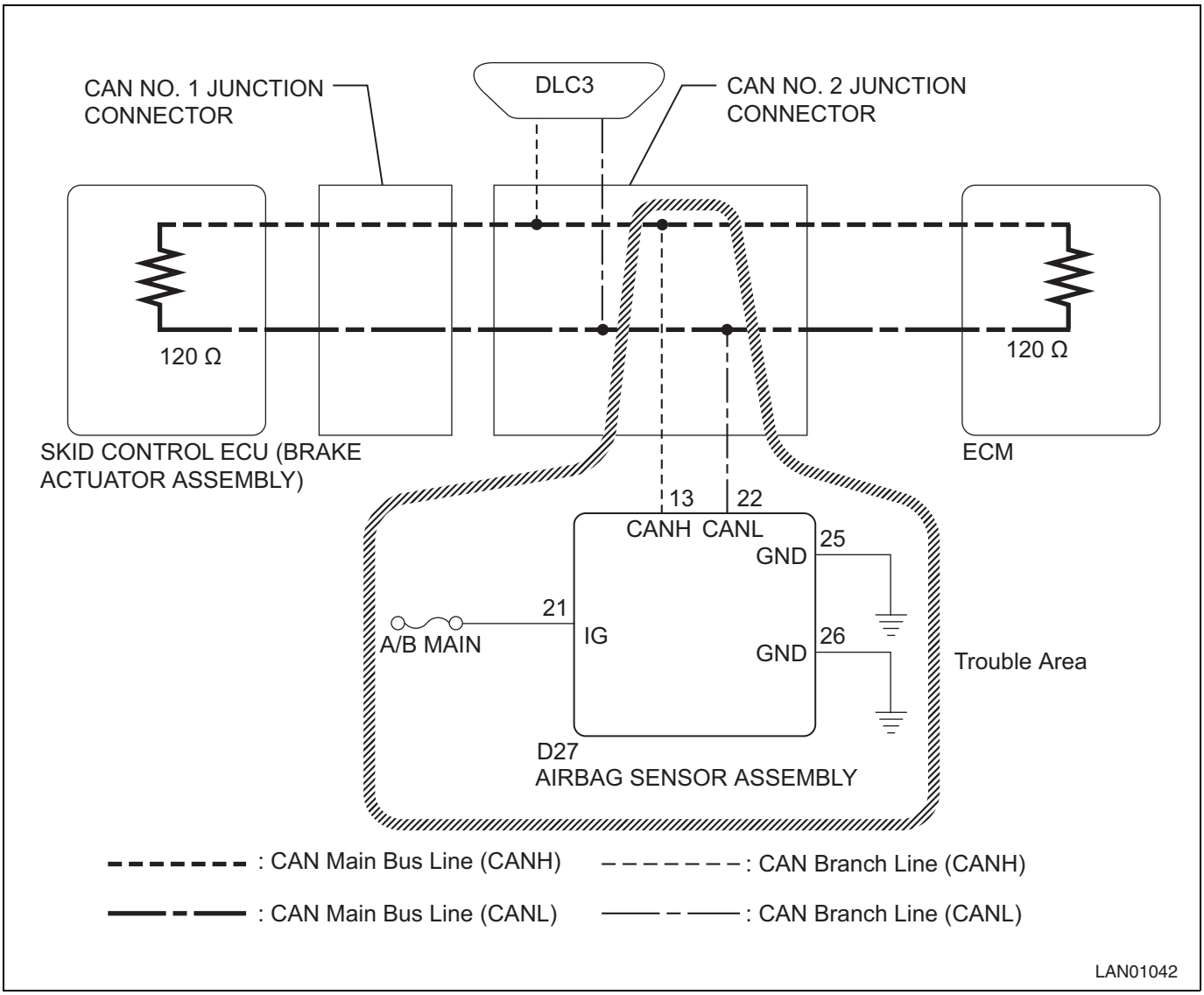

Inspection steps

CAUTION:

- Before measuring the resistance of CAN bus, turn the ignition OFF and leave the vehicle as is for at least one minute without operating keys, switches, and doors. Disconnect the battery and wait for another one minute or more.
- If DTC related with CAN communication system is output, always start the troubleshooting according to the procedure described in "How to troubleshoot". (Refer to NW - 30)
- When the repair is complete, follow DTC check procedure to confirm the same DTC does not recur.
  DTC check procedure: wait 60 seconds or more after IG ON
- After turning the ignition switch to OFF, you may have to wait for a while before disconnecting the battery terminals. Check appropriate precautions for battery terminal disconnection before proceeding. (Refer to IN - 6)
- Before performing troubleshooting, check the fuse for this circuit.

NOTE:

- Before disconnecting a connector, check for loose or unplugged connection by pushing back the connector case.
- After disconnecting the connector, make sure that its terminal and the case have no damage, deformation, or corrosion.

1	Checking for open circuit in CAN bus sub-line (Sub-line to the airbag sensor ASSY)

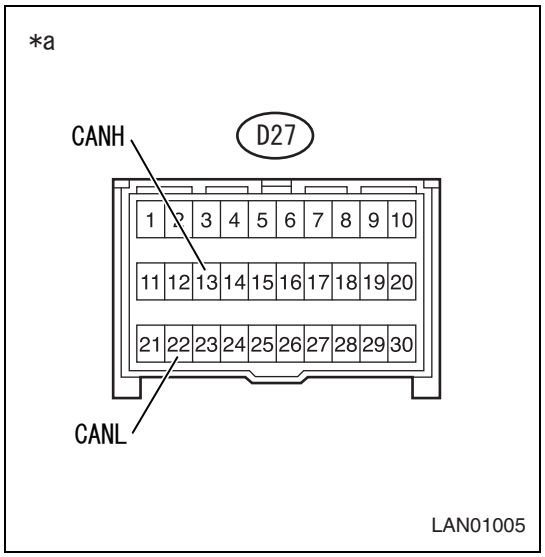

(1) Disconnect the battery ground terminal, and then disconnect the vehicle harness connector D27 from the airbag sensor ASSY.
(2) Measure the resistance between the terminals.

Resistance

Inspection terminals	Inspection conditions	Standard value
D27-13 - D27-22	Disconnection of the battery ground terminal	57 to 63 Ω

Captions in illustration

*a	Front side of vehicle wiring harness connector (Airbag sensor ASSY)

NG → Repair or replacement of CAN bus sub-line or connector

OK

2	Checking of the wiring harness and connector (Power supply system)

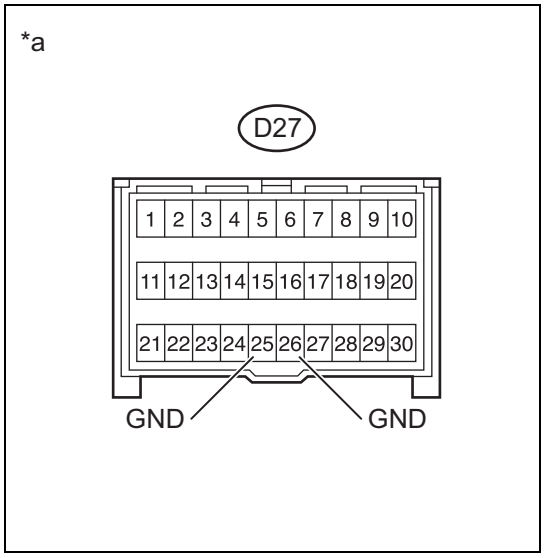

(1) Measure the resistance between the terminals.
Resistance

Inspection terminals	Inspection conditions	Standard value
D27-25 - chassis ground	Disconnection of the battery ground terminal	Less than 1 Ω
D27-26 - chassis ground	Disconnection of the battery ground terminal	Less than 1 Ω

Captions in illustration

*a	Front side of vehicle wiring harness connector (Airbag sensor ASSY)

(2) Reconnect the battery ground terminal.

NW

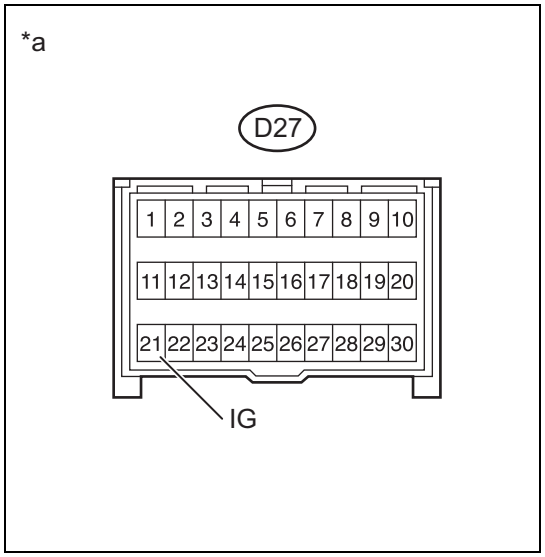

(3) Measure the voltage between the terminals.
Voltage

Inspection terminals	Inspection conditions	Standard value
D27-21 - chassis ground	IG ON	11 to 14 V

Captions in illustration

*a	Front side of vehicle wiring harness connector (Airbag sensor ASSY)

NG → Repair or replacement of wiring harness or connector

OK → Replacement of the airbag sensor ASSY (Refer to RS - 263)

Sub-lines 57-63 Ω(Electric power steering system)

Description of functions

Diagnostic items	Symptoms	Possible cause
Sub-lines 57-63 Ω(DTC detected on the electric power steering system)	Perform inspection if missing data or data error is detected. The cause of malfunction is not a short to the power supply or ground.	• Power steering computer ASSY, open circuit in the sub-line or connector defect • Power steering computer ASSY, power supply system defect • Power steering computer ASSY, internal error

Circuit figure

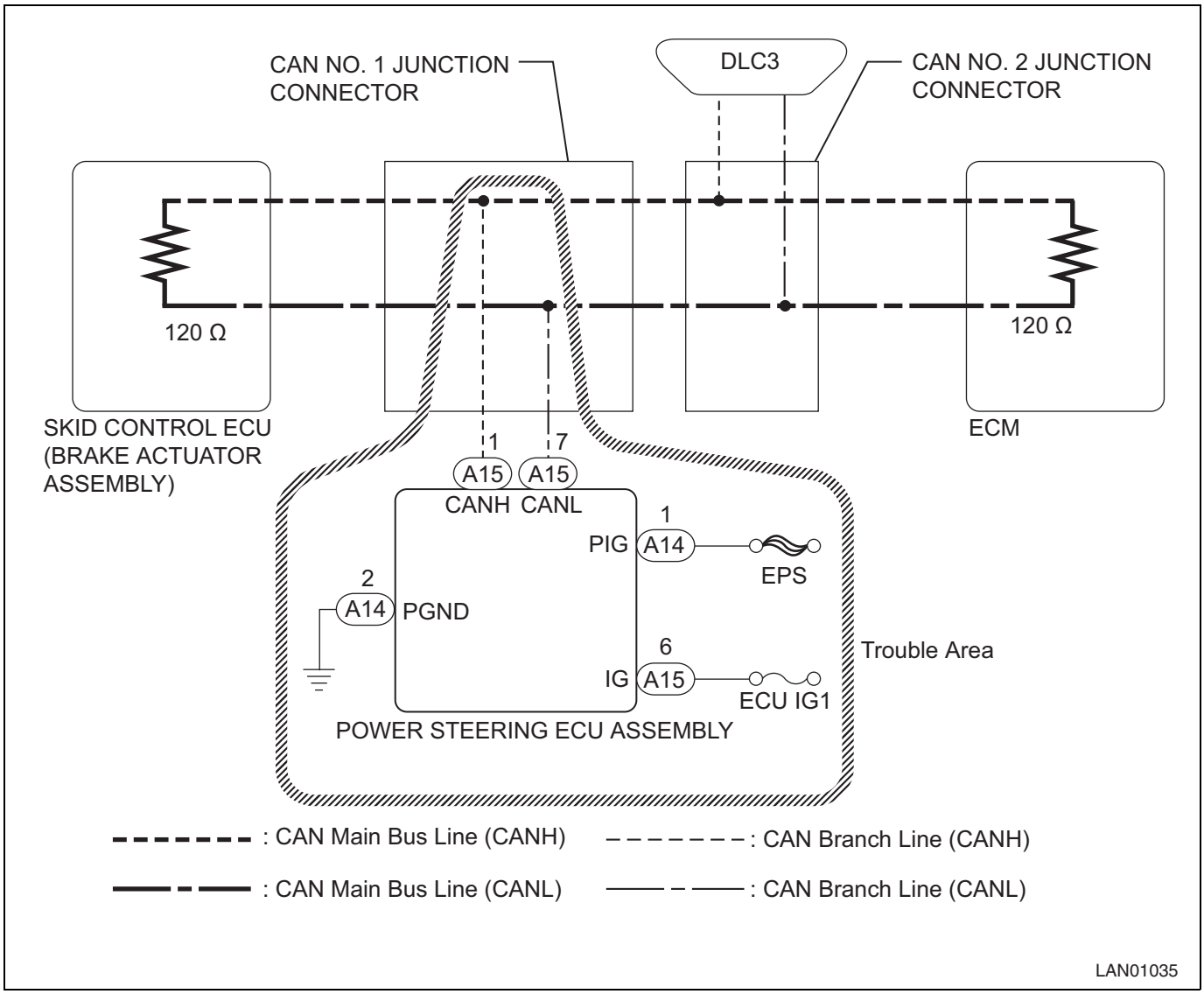

Inspection steps

CAUTION:

- Before measuring the resistance of CAN bus, turn the ignition OFF and leave the vehicle as is for at least one minute without operating keys, switches, and doors. Disconnect the battery and wait for another one minute or more.
- If DTC related with CAN communication system is output, always start the troubleshooting according to the procedure described in "How to troubleshoot". (Refer to NW - 30)
- When the repair is complete, follow DTC check procedure to confirm the same DTC does not recur.
  DTC check procedure: wait 2 seconds or more after IG ON
- After turning the ignition switch to OFF, you may have to wait for a while before disconnecting the battery terminals. Check appropriate precautions for battery terminal disconnection before proceeding. (Refer to IN - 6)
- Before performing troubleshooting, check the fuse for this circuit.

NOTE:

- Before disconnecting a connector, check for loose or unplugged connection by pushing back the connector case.
- After disconnecting the connector, make sure that its terminal and the case have no damage, deformation, or corrosion.

1	Checking for open circuit in CAN bus sub-line (Sub-line to the power steering computer ASSY)

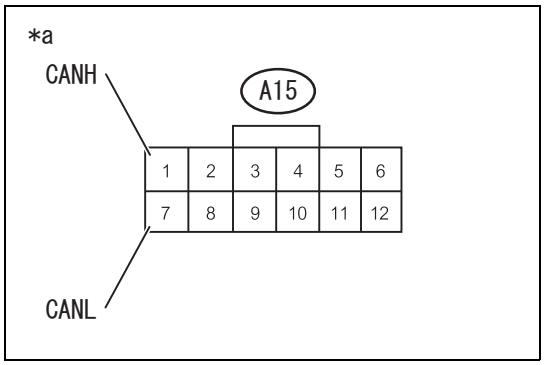

(1) Disconnect the battery ground terminal, and then disconnect the vehicle harness connector A15 from the power steering computer ASSY.
(2) Measure the resistance between the terminals.

Resistance

Inspection terminals	Inspection conditions	Standard value
A15-1 - A15-7	Disconnection of the battery ground terminal	57 to 63 Ω

Captions in illustration

*a	Front side of vehicle wiring harness connector (Power steering computer ASSY)

NG → Repair or replacement of CAN bus sub-line or connector

OK

2	Checking of the wiring harness and connector (Power supply system)

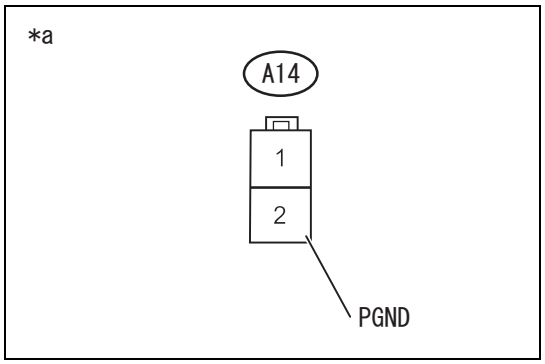

(1) Disconnect the vehicle harness connector A14 from the power steering computer ASSY.
(2) Measure the resistance between the terminals.

Resistance

Inspection terminals	Inspection conditions	Standard value
A14-2 - chassis ground	Disconnection of the battery ground terminal	Less than 1 Ω

Captions in illustration

*a	Front side of vehicle wiring harness connector (Power steering computer ASSY)

(3) Reconnect the battery ground terminal.

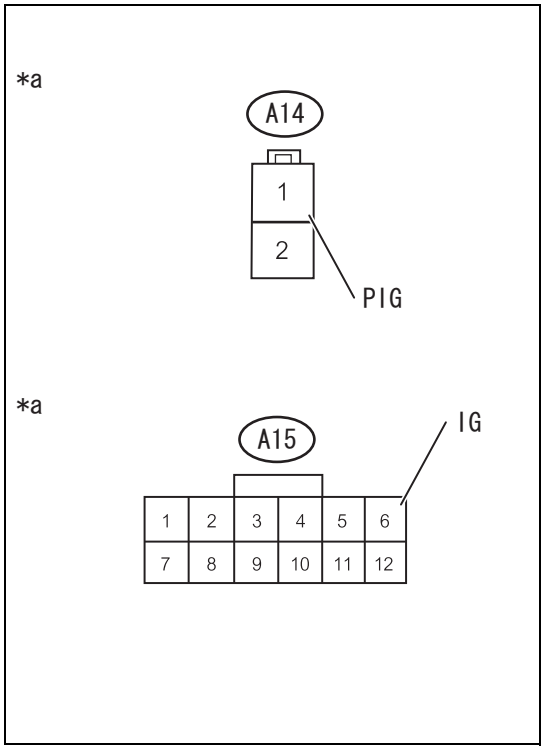

(4) Measure the voltage between the terminals.
Voltage

Inspection terminals	Inspection conditions	Standard value
A14-1 - chassis ground	IG OFF	11 to 14 V
A15-6 - chassis ground	IG ON	11 to 14 V

Captions in illustration

*a	Front side of vehicle wiring harness connector (Power steering computer ASSY)

NG → Repair or replacement of wiring harness or connector

OK

Replacement of the power steering computer ASSY (Refer to PA - 40)

Sub-lines 57-63 Ω(Air conditioner control panel system)

Description of functions

Diagnostic items	Symptoms	Possible cause
Sub-lines 57-63 Ω(DTC detected on the air conditioner control panel system)	Perform inspection if missing data or data error is detected. The cause of malfunction is not a short to the power supply or ground.	• Air conditioner amplifier ASSY, open circuit in the sub-line or connector defect • Air conditioner amplifier ASSY, power supply system defect • Air conditioner amplifier ASSY, internal error

Circuit figure

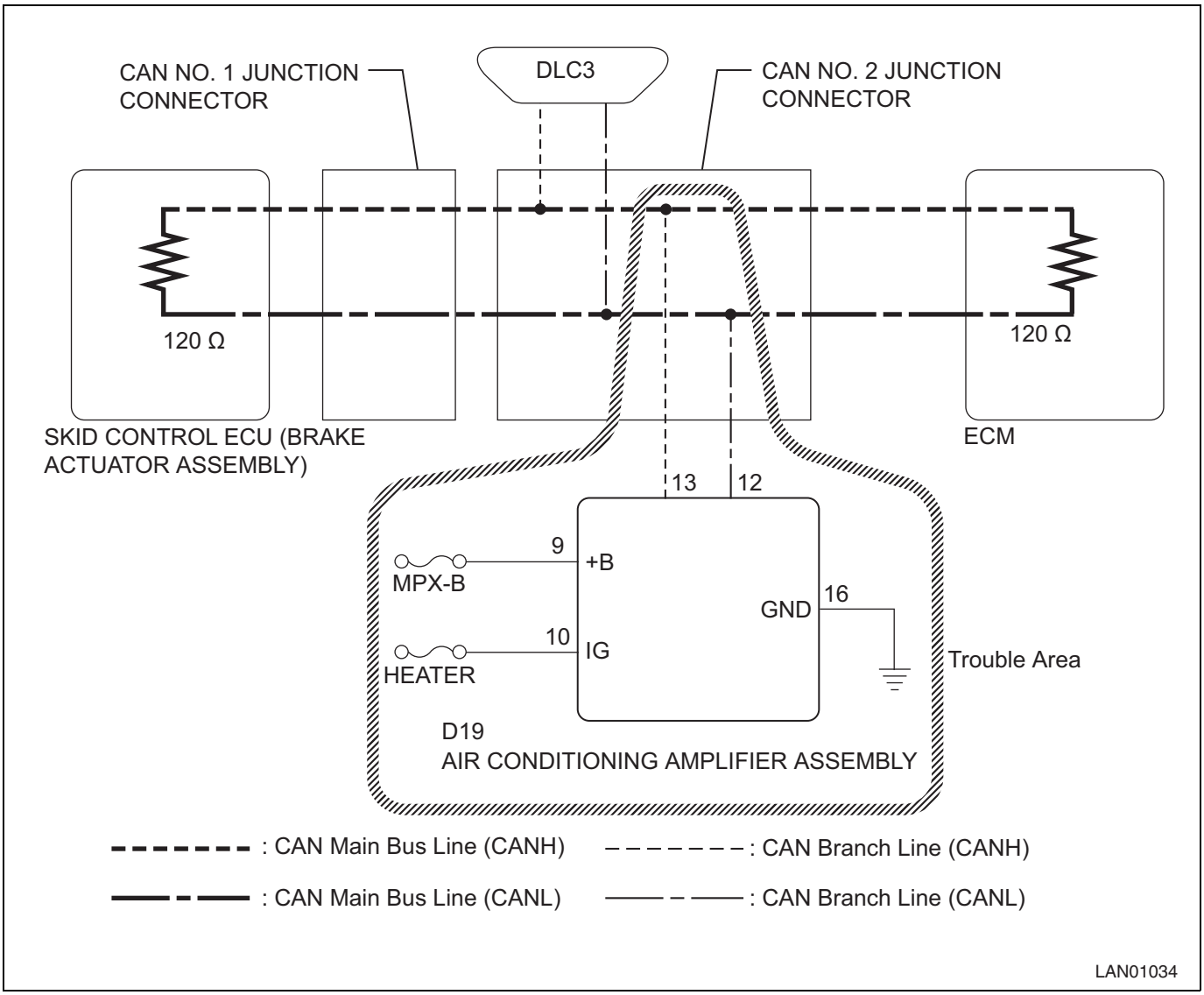

Inspection steps

CAUTION:

- Before measuring the resistance of CAN bus, turn the ignition OFF and leave the vehicle as is for at least one minute without operating keys, switches, and doors. Disconnect the battery and wait for another one minute or more.
- If DTC related with CAN communication system is output, always start the troubleshooting according to the procedure described in "How to troubleshoot". (Refer to NW - 30)
- When the repair is complete, follow DTC check procedure to confirm the same DTC does not recur.
  DTC check procedure: wait 60 seconds or more after IG ON
- After turning the ignition switch to OFF, you may have to wait for a while before disconnecting the battery terminals. Check appropriate precautions for battery terminal disconnection before proceeding. (Refer to IN - 6)
- Before performing troubleshooting, check the fuse for this circuit.

NOTE:

- Before disconnecting a connector, check for loose or unplugged connection by pushing back the connector case.
- After disconnecting the connector, make sure that its terminal and the case have no damage, deformation, or corrosion.

1	Checking for open circuit in CAN bus sub-line (Sub-line to the air conditioner amplifier ASSY)

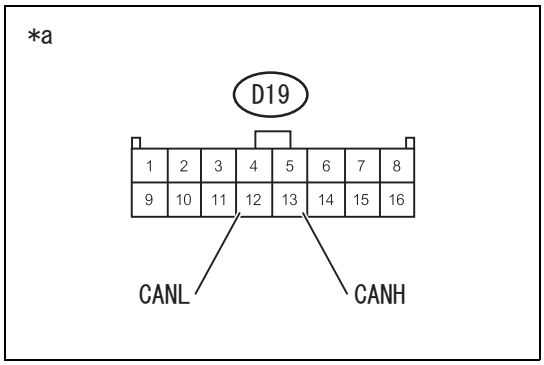

(1) Disconnect the battery ground terminal, and then disconnect the vehicle harness connector D19 from the air conditioner amplifier ASSY.
(2) Measure the resistance between the terminals.

Resistance

Inspection terminals	Inspection conditions	Standard value
D19-13 - D19-12	Disconnection of the battery ground terminal	57 to 63 Ω

Captions in illustration

*a	Front side of vehicle wiring harness connector (Air conditioner amplifier ASSY)

NG → Repair or replacement of CAN bus sub-line or connector

OK

2	Checking of the wiring harness and connector (Power supply system)

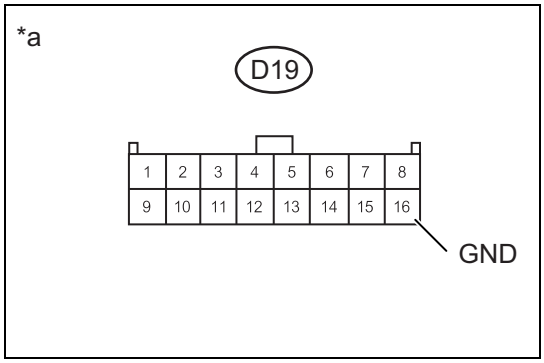

(1) Measure the resistance between the terminals.
Resistance

Inspection terminals	Inspection conditions	Standard value
D19-16 - chassis ground	Disconnection of the battery ground terminal	Less than 1 Ω

Captions in illustration

*a	Front side of vehicle wiring harness connector (Air conditioner amplifier ASSY)

(2) Reconnect the battery ground terminal.

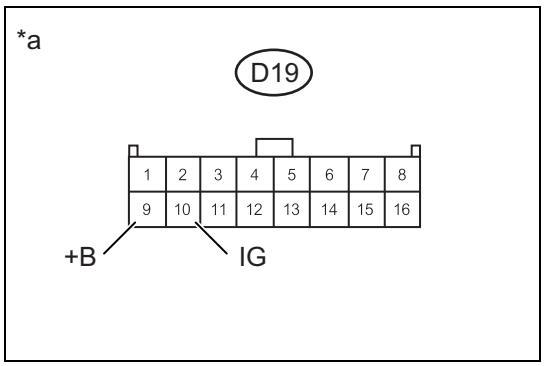

(3) Measure the voltage between the terminals.
Voltage

Inspection terminals	Inspection conditions	Standard value
D19-9 - chassis ground	IG OFF	11 to 14 V
D19-10 - chassis ground	IG ON	11 to 14 V

Captions in illustration

*a	Front side of vehicle wiring harness connector (Air conditioner amplifier ASSY)

NG → Repair or replacement of wiring harness or connector

OK

Replacement of the air conditioner amplifier ASSY (Refer toAC - 170)

Sub-lines 57-63 Ω(Combination meter ASSY system)

Description of functions

Diagnostic items	Symptoms	Possible cause
Sub-lines 57-63 Ω(DTC detected on the combination meter ASSY system)	Perform inspection if missing data or data error is detected. The cause of malfunction is not a short to the power supply or ground.	• Combination meter ASSY, open circuit in the sub-line or connector defect • Combination meter ASSY, power supply system defect • Combination meter ASSY, internal error

Circuit figure

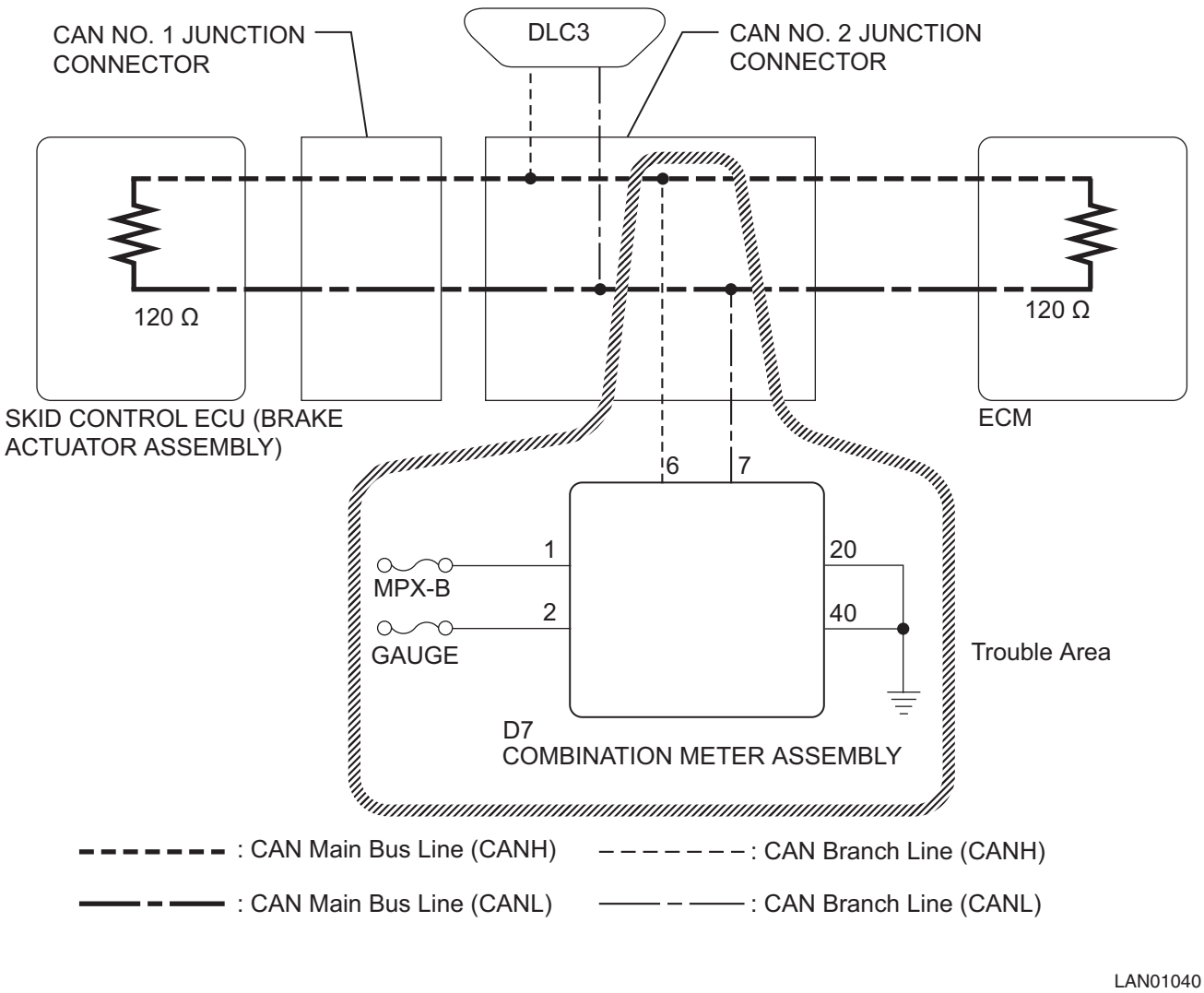

Inspection steps

CAUTION:

- Before measuring the resistance of CAN bus, turn the ignition OFF and leave the vehicle as is for at least one minute without operating keys, switches, and doors. Disconnect the battery and wait for another one minute or more.
- If DTC related with CAN communication system is output, always start the troubleshooting according to the procedure described in "How to troubleshoot". (Refer to NW - 30)
- When the repair is complete, follow DTC check procedure to confirm the same DTC does not recur.
  DTC check procedure: wait 3 seconds or more after IG ON

- After turning the ignition switch to OFF, you may have to wait for a while before disconnecting the battery terminals. Check appropriate precautions for battery terminal disconnection before proceeding. (Refer to IN - 6)
- Before performing troubleshooting, check the fuse for this circuit.

NOTE:

- Before disconnecting a connector, check for loose or unplugged connection by pushing back the connector case.
- After disconnecting the connector, make sure that its terminal and the case have no damage, deformation, or corrosion.

1	Checking for open circuit in CAN bus sub-line (Sub-line to the combination meter ASSY)

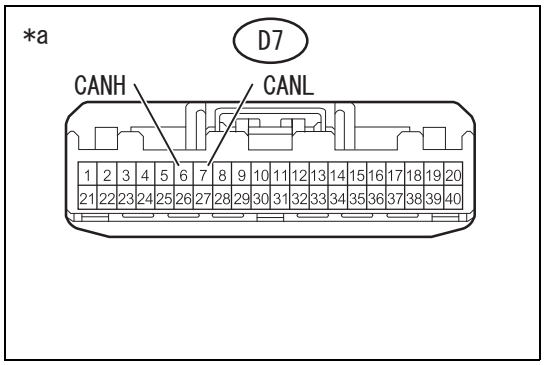

(1) Disconnect the battery ground terminal, and then disconnect the vehicle harness connector D7 from the combination meter ASSY.
(2) Measure the resistance between the terminals.

Resistance

Inspection terminals	Inspection conditions	Standard value
D7-6 - D7-7	Disconnection of the battery ground terminal	57 to 63 Ω

Captions in illustration

*a	Front side of vehicle wiring harness connector (Combination meter ASSY)

NG → Repair or replacement of CAN bus sub-line or connector

OK

2	Checking of the wiring harness and connector (Power supply system)

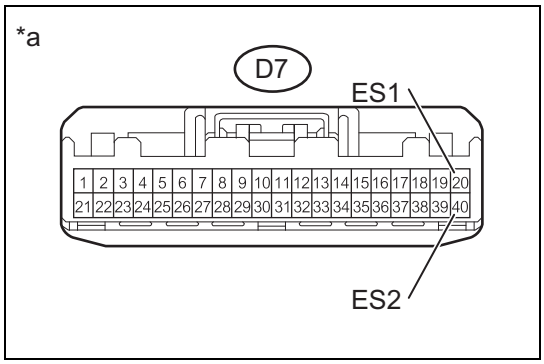

(1) Measure the resistance between the terminals.
Resistance

Inspection terminals	Inspection conditions	Standard value
D7-20 - chassis ground	Disconnection of the battery ground terminal	Less than 1 Ω
D7-40 - chassis ground	Disconnection of the battery ground terminal	Less than 1 Ω

Captions in illustration

*a	Front side of vehicle wiring harness connector (Combination meter ASSY)

(2) Reconnect the battery ground terminal.

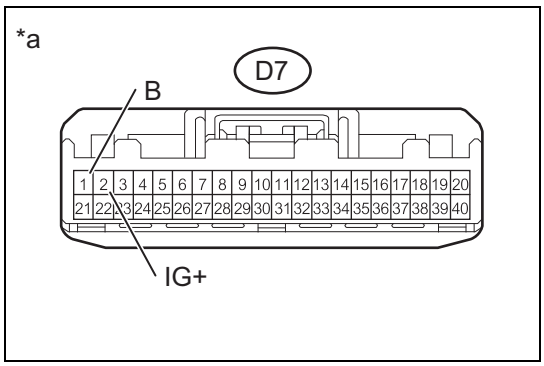

(3) Measure the voltage between the terminals.
Voltage

Inspection terminals	Inspection conditions	Standard value
D7-1 - chassis ground	IG OFF	11 to 14 V
D7-2 - chassis ground	IG ON	11 to 14 V

Captions in illustration

*a	Front side of vehicle wiring harness connector (Combination meter ASSY)

NG → Repair or replacement of wiring harness or connector

NW

OK

Replacement of the combination meter ASSY (Refer to ME - 63)

Sub-lines 57-63 Ω(Keyless access system)

Description of functions

Diagnostic items	Symptoms	Possible cause
Sub-lines 57-63 Ω(DTC detected on the combination meter ASSY system)	Perform inspection if missing data or data error is detected. The cause of malfunction is not a short to the power supply or ground.	• Collation ECM (Smart key computer ASSY), open circuit in sub-line or connector defect • Collation ECM (smart key computer ASSY), power supply system defect • Collation ECM (smart key computer ASSY), internal error

NW

Circuit figure

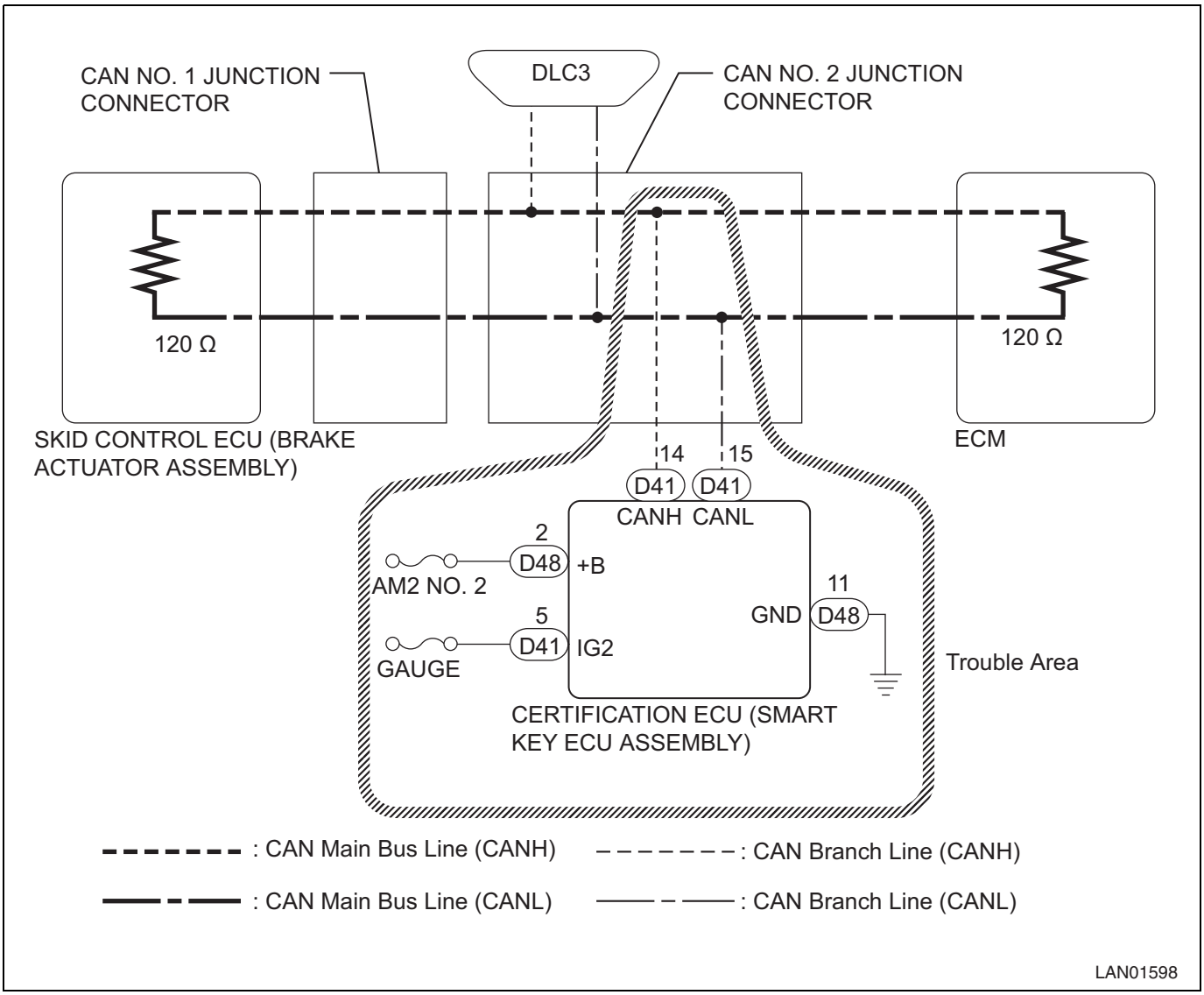

Inspection steps

CAUTION:

- Before measuring the resistance of CAN bus, turn the ignition OFF and leave the vehicle as is for at least one minute without operating keys, switches, and doors. Disconnect the battery and wait for another one minute or more.
- If DTC related with CAN communication system is output, always start the troubleshooting according to the procedure described in "How to troubleshoot". (Refer to NW - 30)
- When the repair is complete, follow DTC check procedure to confirm the same DTC does not recur.
  DTC check procedure: wait 10 seconds or more after IG ON
- After turning the ignition switch to OFF, you may have to wait for a while before disconnecting the battery terminals. Check appropriate precautions for battery terminal disconnection before proceeding. (Refer to IN - 6)
- Before performing troubleshooting, check the fuse for this circuit.

NOTE:

- Before disconnecting a connector, check for loose or unplugged connection by pushing back the connector case.
- After disconnecting the connector, make sure that its terminal and the case have no damage, deformation, or corrosion.

1	Checking for open circuit in CAN bus sub-line (Sub-line to the collation ECM (Smart key computer ASSY))

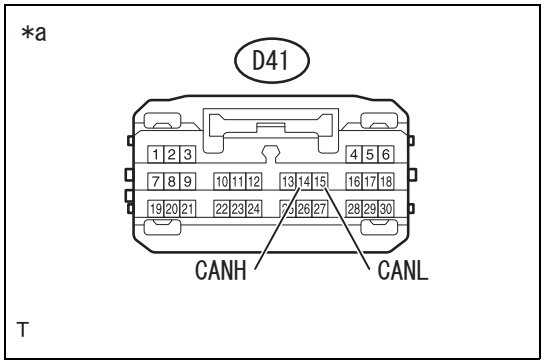

(1) Disconnect the battery ground terminal, and then disconnect the vehicle harness connector D41 from the collation ECM (Smart key computer ASSY).

(2) Measure the resistance between the terminals.

Resistance

Inspection terminals	Inspection conditions	Standard value
D41-14 - D41-15	Disconnection of the battery ground terminal	57 to 63 Ω

Captions in illustration

*a	Front side of vehicle wiring harness connector (Collation ECM (Smart key computer ASSY))

NG → Repair or replacement of CAN bus sub-line

OK

2	Checking of the wiring harness and connector (Power supply system)

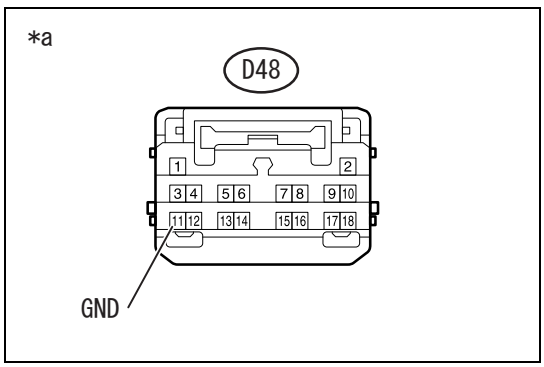

(1) Measure the resistance between the terminals.

Resistance

Inspection terminals	Inspection conditions	Standard value
D48-11 - chassis ground	Disconnection of the battery ground terminal	Less than 1 Ω

Captions in illustration

*a	Front side of vehicle wiring harness connector (Collation ECM (Smart key computer ASSY))

(2) Reconnect the battery ground terminal.

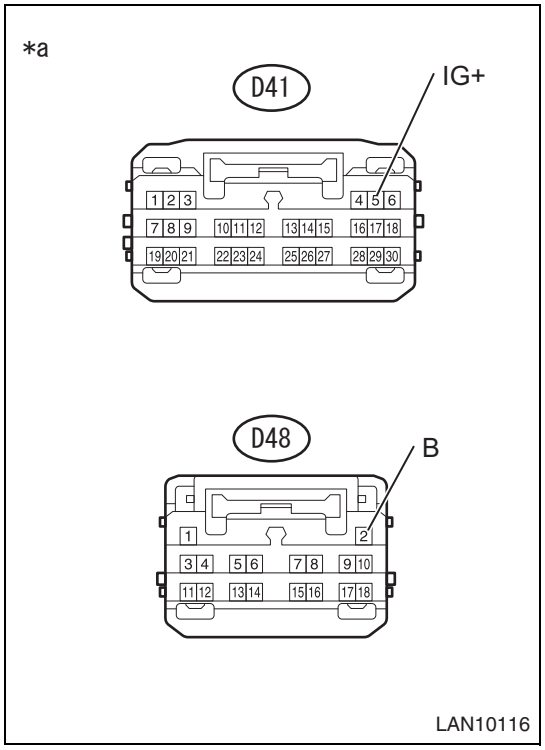

(3) Measure the voltage between the terminals.
Voltage

Inspection terminals	Inspection conditions	Standard value
D41-5 - chassis ground	IG ON	11 to 14 V
D48-2 - chassis ground	IG OFF	11 to 14 V

Captions in illustration

*a	Front side of vehicle wiring harness connector (Collation ECM (Smart key computer ASSY))

NG → Repair or replacement of wiring harness or connector

OK

Replacement of the collation ECM (Smart key computer ASSY)

Sub-lines 57-63 Ω(Body integrated unit system)

Description of functions

Diagnostic items	Symptoms	Inspection items
Sub-lines 57-63 Ω(DTC detected on the body integrated unit system)	Perform inspection if missing data or data error is detected. The cause of malfunction is not a short to the power supply or ground.	• Main body ECM (Multiplex network body computer), open circuit in sub-line or connector defect • Main body ECM (multiplex network body computer), power supply system defect • Main body ECM (multiplex network body computer), internal error

Circuit figure

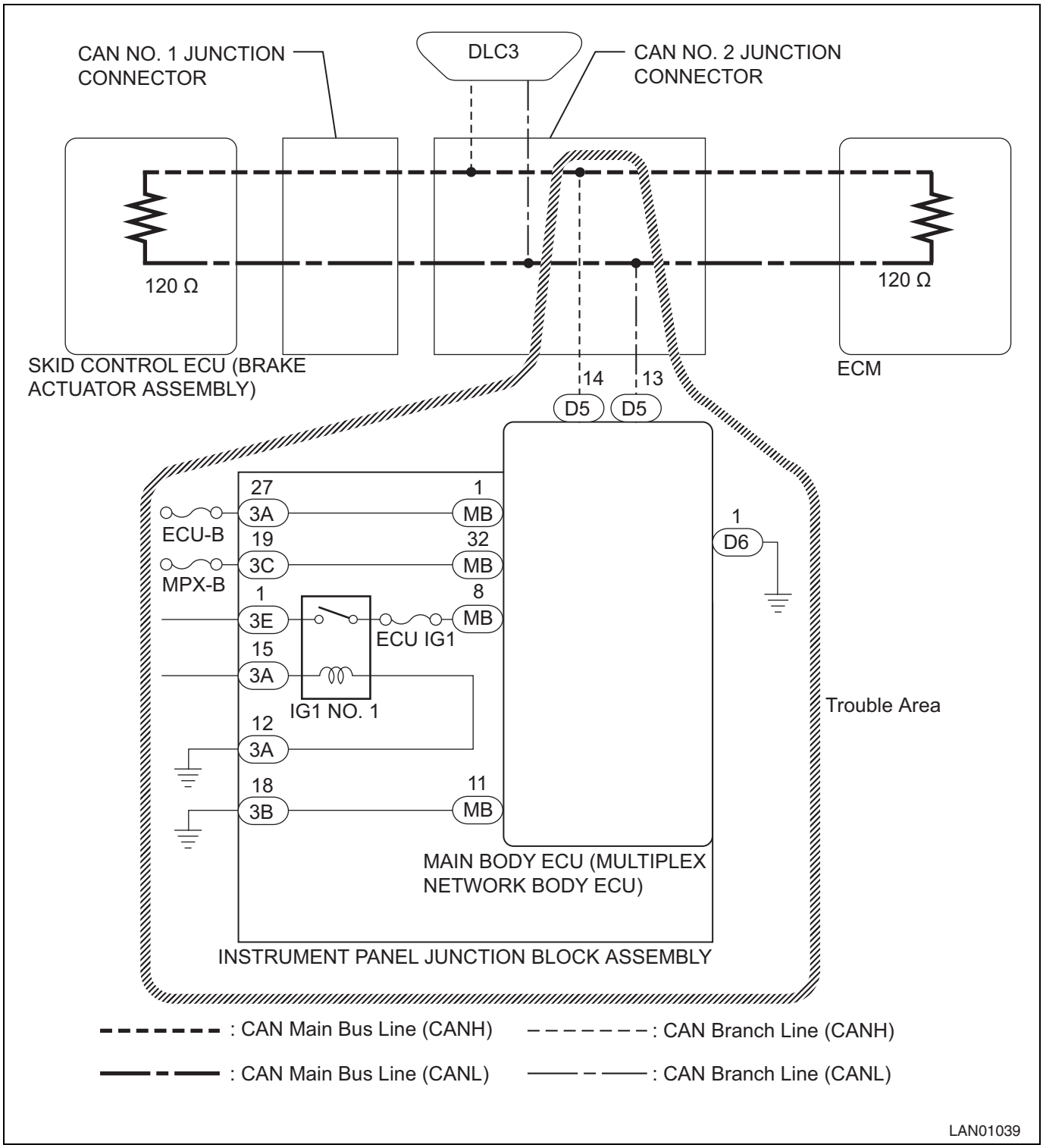

Inspection steps

CAUTION:

- Before measuring the resistance of CAN bus, turn the ignition OFF and leave the vehicle as is for at least one minute without operating keys, switches, and doors. Disconnect the battery and wait for another one minute or more.
- If DTC related with CAN communication system is output, always start the troubleshooting according to the procedure described in "How to troubleshoot". (Refer to NW - 30)
- When the repair is complete, follow DTC check procedure to confirm the same DTC does not recur.
  DTC check procedure: wait 15 seconds or more after IG ON
- After turning the ignition switch to OFF, you may have to wait for a while before disconnecting the battery terminals. Check appropriate precautions for battery terminal disconnection before proceeding. (Refer to IN - 6)

- Before performing troubleshooting, check the fuse for this circuit.

NOTE:

- Before disconnecting a connector, check for loose or unplugged connection by pushing back the connector case.
- After disconnecting the connector, make sure that its terminal and the case have no damage, deformation, or corrosion.

1	Checking for open circuit in CAN bus sub-line (Sub-line to the main body ECM (Multiplex network body computer))

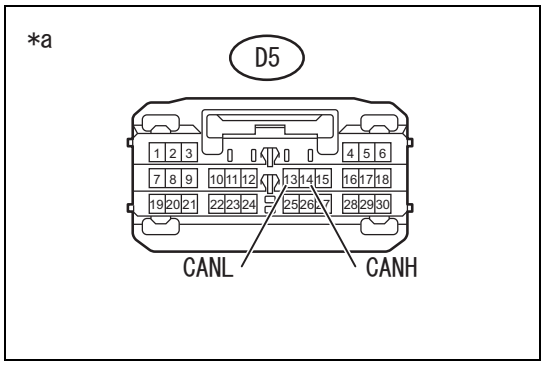

(1) Disconnect the battery ground terminal, and then disconnect the connector D5 from the main body ECM (Multiplex network body computer).

(2) Measure the resistance between the terminals.

Resistance

Inspection terminals	Inspection conditions	Standard value
D5-14 - D5-13	IG OFF	57 to 63 Ω

Captions in illustration

*a	Front side of vehicle wiring harness connector (Main body ECM (Multiplex network body computer))

NG → Repair or replacement of CAN bus sub-line or connector

OK

2	Checking of the instrument panel junction block ASSY

(1) Remove the main body ECM (Multiplex network body computer). (Refer to PD - 25)

(2) Remove the instrument panel junction block ASSY. (Refer to PD - 25)

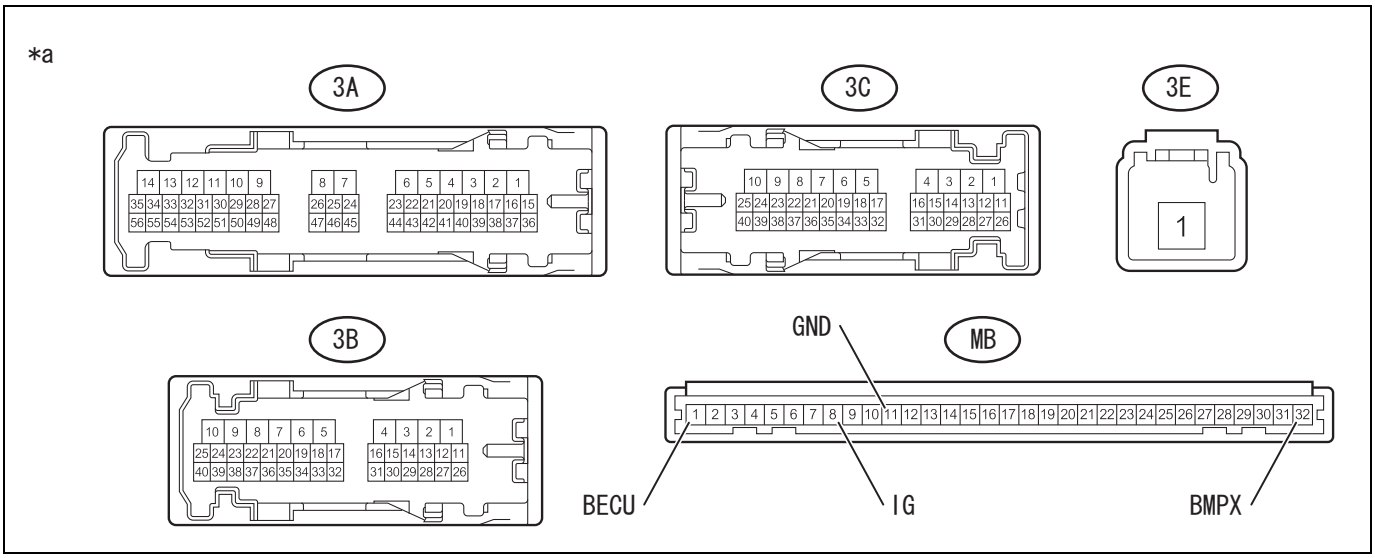

Captions in illustration

*a	Connector not connected (Instrument panel junction block ASSY)	-	-

(3) Measure the resistance between the terminals.

Resistance

Inspection terminals	Inspection conditions	Standard value
3E-1 - MB-8	Apply battery voltage between terminals 3A-15 and 3A-12.	Less than 1 Ω
MB-1 - 3A-27	Always	Less than 1 Ω
MB-11 - 3B-18	Always	Less than 1 Ω
MB-32 - 3C-19	Always	Less than 1 Ω

NG → Replacement of the instrument panel junction block ASSY (Refer to PD - 25)

OK

NW

3	Checking of the wiring harness and connector (Power supply system)

(1) Reinstall the instrument panel junction block ASSY.
(2) Disconnect the connector D6 from the main body ECM (Multiplex network body computer).

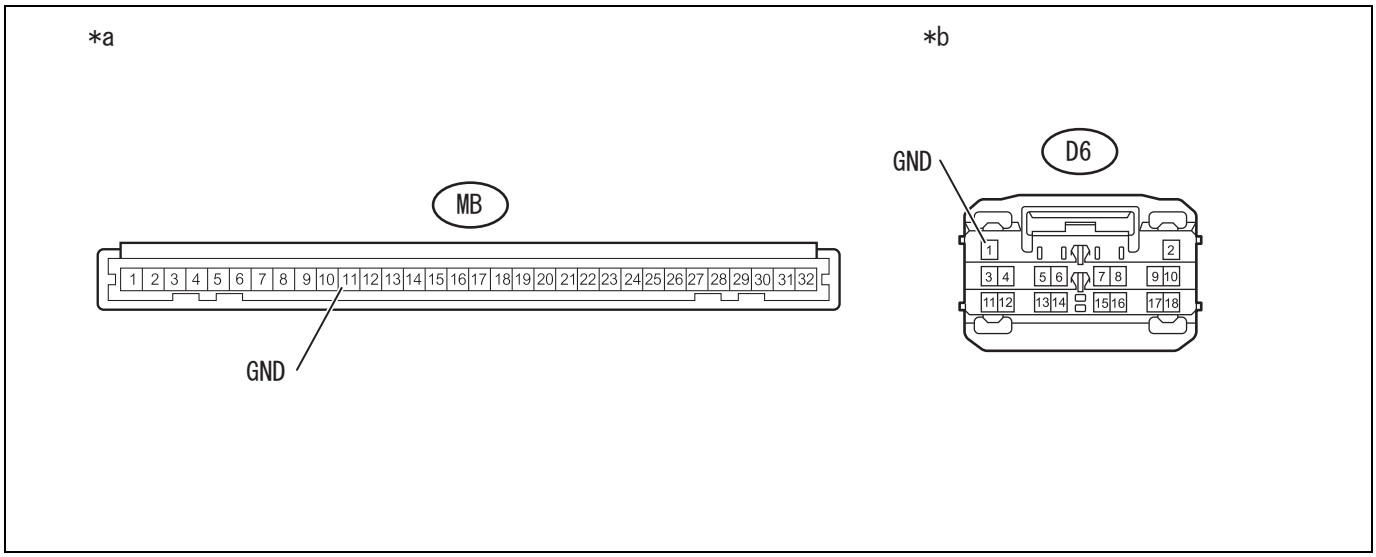

Captions in illustration

*a	Connector not connected (Instrument panel junction block ASSY)	*b	Front side of vehicle wiring harness connector (Main body ECM (Multiplex network body computer))

(3) Measure the resistance between the terminals.

Resistance

Inspection terminals	Inspection conditions	Standard value
D6-1 - chassis ground	Always	Less than 1 Ω
MB-11 - chassis ground	Always	Less than 1 Ω

(4) Reconnect the battery ground terminal.
(5) Measure the voltage between the terminals.

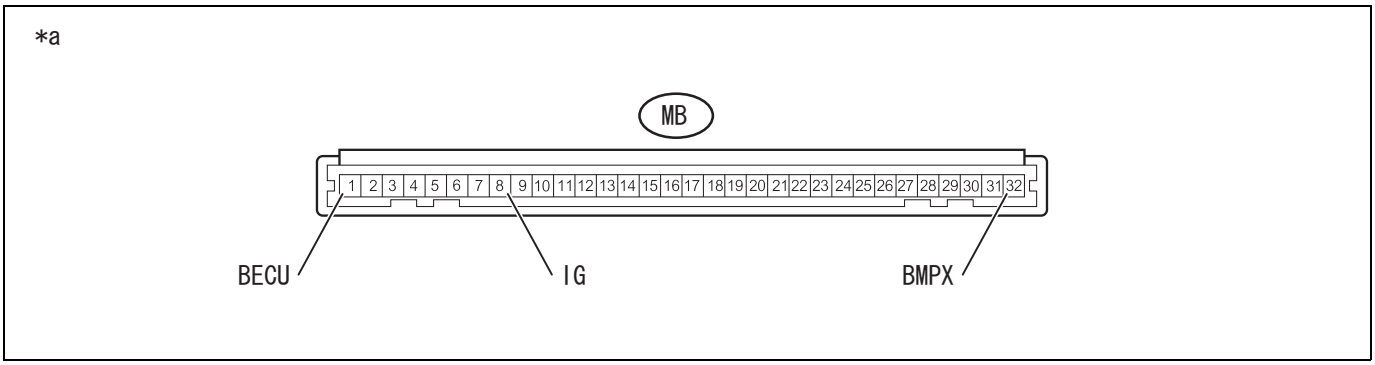

Captions in illustration

*a	Connector not connected (Instrument panel junction block ASSY)	-	-

NW

Voltage

Inspection terminals	Inspection conditions	Standard value
MB-1 - chassis ground	IG OFF	11 to 14V
MB-8 - chassis ground	IG ON	11 to 14V
MB-32 - chassis ground	IG OFF	11 to 14V

NG → Repair or replacement of wiring harness or connector

OK

Replacement of the main body ECM (Multiplex network body computer) (Refer to PD - 25)

Exceeding 63 Ω

Description of functions

If the resistance between the data link connector 6 (CANH) ←→14 (CANL) is exceeding 63 Ω, CAN bus main line or the sub-line to the data link connector may be open.

Symptoms	Possible cause
Resistance between the data link connectors 6 (CANH) ←→14 (CANL) exceeds 63 Ω	• Open circuit in the sub-line or defective connector in the data link connector • Open circuit in CAN bus main line or connector defect • Wiring harness connector (CAN J/C1) • Wiring harness connector (CAN J/C2) • Engine control computer, internal error • Brake actuator ASSY, internal error

This malfunction is not caused by CAN bus sub-line or each ECM and sensor connected to CAN bus sub-line.

Circuit figure

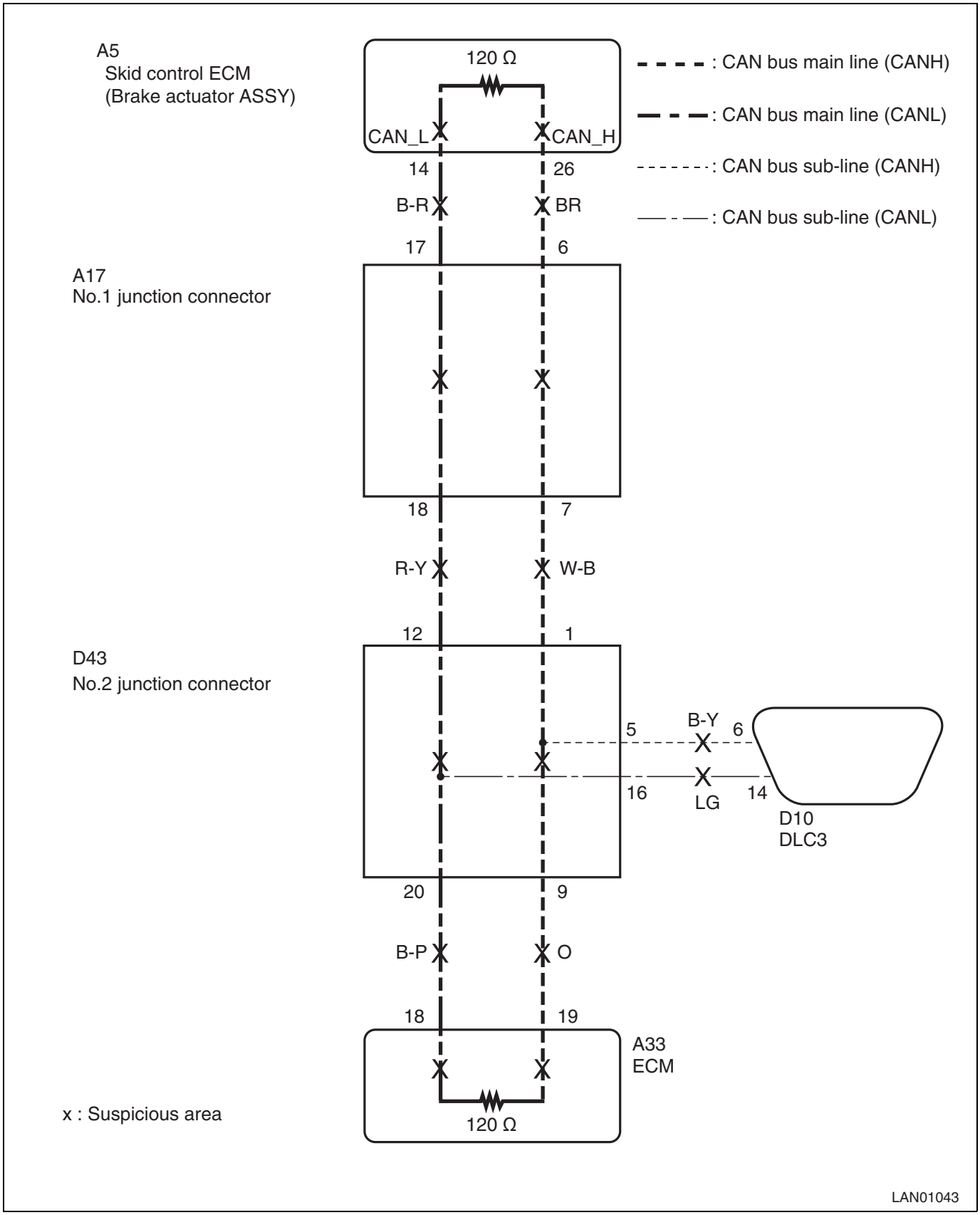

Inspection steps

CAUTION:

- Before measuring the resistance of CAN bus, turn the ignition OFF and leave the vehicle as is for at least one minute without operating keys, switches, and doors. Disconnect the battery and wait for another one minute or more.

- If DTC related with CAN communication system is output, always start the troubleshooting according to the procedure described in "How to troubleshoot". (Refer to NW - 30)
- When the repair is complete, follow DTC check procedure to confirm the same DTC does not recur.
  DTC check procedure: Wait 60 seconds or more after IG ON, then drive the vehicle at 15 km/h or more for at least one second.
- After turning the ignition switch to OFF, you may have to wait for a while before disconnecting the battery terminals. Check appropriate precautions for battery terminal disconnection before proceeding. (Refer to IN - 6)

NOTE:

- Before disconnecting a connector, check for loose or unplugged connection by pushing back the connector case.
- After disconnecting the connector, make sure that its terminal and the case have no damage, deformation, or corrosion.

1	Checking for open circuit in CAN bus sub-line (sub-line to data link connector)

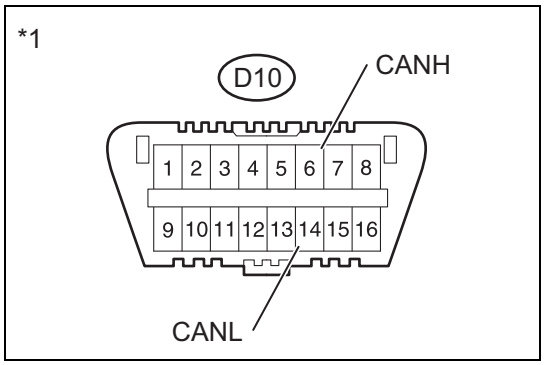

(1) Disconnect the battery ground terminal.

(2) Use the tester to measure the resistance between terminals.
Resistance

Inspection terminals	Inspection conditions	Standard value
D10-6 - D10-14	Disconnection of the battery ground terminal	57 to 63Ω

Captions in illustration

*1	Data link connector

CAUTION:
When the measured value exceeds 63 Ωand CAN communication system diagnostic code is output, there may be a defect besides the open circuit in the data link connector sub-line. Repair the defective part first, and then follow the procedure again described in 'How to troubleshoot'. (Refer to NW - 30)

OK → CAN bus is normal.

NG

2	Checking for open circuit in CAN bus main line (Engine control computer)

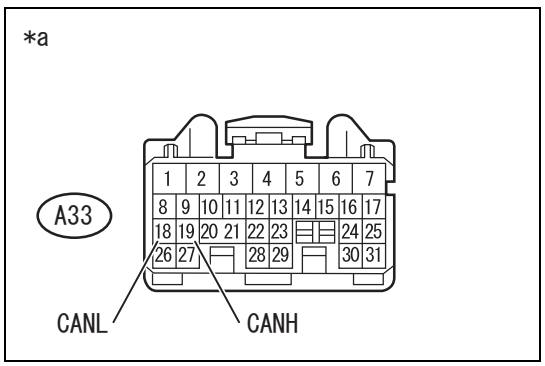

(1) Disconnect the vehicle harness connector A33 from the engine control computer.

(2) Measure the resistance between the terminals.

Resistance

Inspection terminals	Inspection conditions	Standard value
A33-19 - A33-18	Disconnection of the battery ground terminal	114 to 126 Ω

Captions in illustration

*a	Front side of vehicle wiring harness connector (Engine control computer)

NG → Go to Step 3

OK

Replacement of the engine control computer (Refer to ES - 670)

3	Checking for an open circuit in CAN bus main line (Brake actuator ASSY)

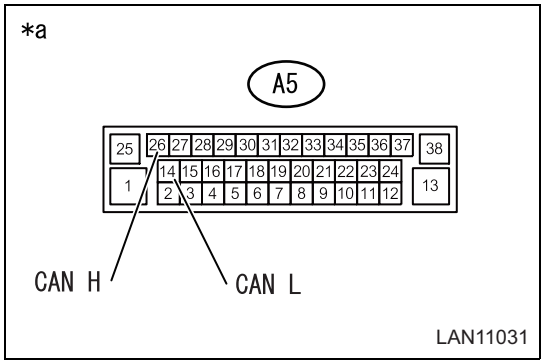

(1) Reconnect the vehicle harness connector A33 to the engine control computer.

(2) Disconnect the vehicle harness connector A5 from the brake actuator ASSY.

(3) Measure the resistance between the terminals.

Resistance

Inspection terminals	Inspection conditions	Standard value
A5-26 - A5-14	Disconnection of the battery ground terminal	114 to 126 Ω

Captions in illustration

*a	Front side of vehicle wiring harness connector (Brake actuator ASSY)

NG → Go to Step 4

OK

Replacement of the brake actuator ASSY (Refer to BC - 93)

4	Checking for open circuit in CAN bus main line (Wiring harness connector (CAN J/C2))

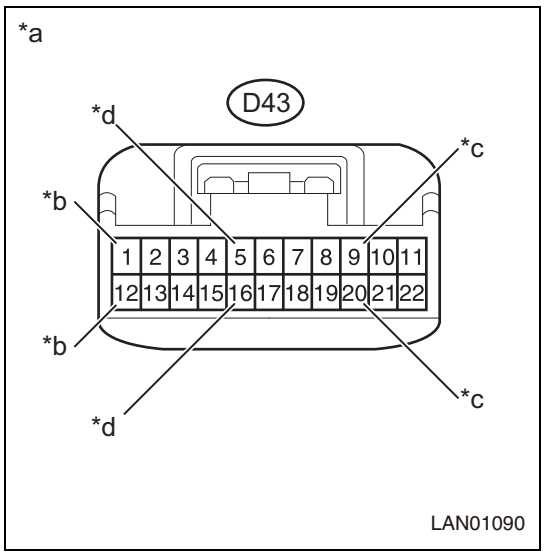

(1) Reconnect the vehicle harness connector A5 to the brake actuator ASSY.

(2) Disconnect the vehicle wiring harness connector D43 from the wiring harness connector (CAN J/C2).

(3) Measure the resistance between the terminals.

Resistance

Inspection terminals	Inspection conditions	Standard value	Connecting to
D43-1 - D43-12	Disconnection of the battery ground terminal	114 to 126 Ω	Wiring harness connector (CAN J/C1)
D43-9 - D43-20	Disconnection of the battery ground terminal	114 to 126 Ω	Engine control computer
D43-5 - D10-6	Disconnection of the battery ground terminal	Less than 1 Ω	DLC
D43-16 - D10-14	Disconnection of the battery ground terminal	Less than 1 Ω	DLC

Captions in illustration

*a	Front side of vehicle wiring harness connector (To CAN No.2 junction connector)
*b	To CAN No.1 junction connector

*c	To the engine control computer
*d	To DLC3

Criteria

Result	Go to
OK (No open circuit in the main line)	A
NG (the engine control computer main line)	B
NG (Main line to CAN No.1 junction connector)	C
NG (Open circuit in the DLC3 sub-line)	D

B → Repair or replacement of CAN bus main line or connector (Wiring harness connector (CAN J/C1) - Engine control computer)

C → Go to Step 5

D → Repair or replacement of the CAN bus sub-line or connectors (CAN J/C2 - DLC3)

A

Replacement of the wiring harness connector (CAN J/C2)

5	Checking for open circuit in CAN bus main line (Wiring harness connector (CAN No.2 J/C - CAN No.1 J/C))

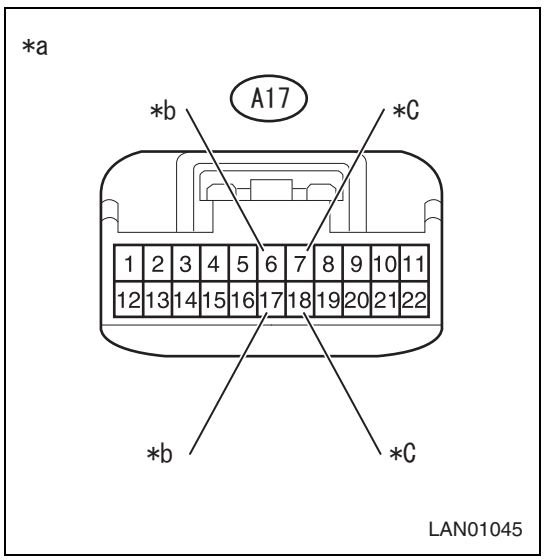

(1) Connect the wiring harness connector to CAN No.2 junction connector.

(2) Disconnect the wiring harness connector from CAN No.1 junction connector.

(3) Measure the resistance between the terminals.

Resistance

Inspection terminals	Inspection conditions	Standard value	Connecting to
A17-6 - A17-17	Disconnection of the battery ground terminal	114 to 126 Ω	Brake actuator ASSY
A17-7 - A17-18	Disconnection of the battery ground terminal	114 to 126 Ω	Wiring harness connector (CAN J/C2)

Captions in illustration

*a	Front side of vehicle wiring harness connector (To CAN No.1 junction connector)
*b	To the skid control ECM (Brake actuator ASSY)
*c	To CAN No.2 junction connector

Criteria

Result	Go to
OK (No open circuit in the main line)	A
NG (Open circuit in the main line to the wiring harness connector (CAN J/C2))	B

Result	Go to
NG (Open circuit in the main line to the brake actuator ASSY)	C

B → Repair or replacement of CAN bus main line or connector (CAN No.1 J/C - CAN No.2 J/C)

C → Repair or replacement of CAN bus main line or connector (CAN No.1 J/C - Skid control ECM (Brake actuator ASSY))

A

Replacement of the wiring harness connector (CAN J/C1)

Less than 57 Ω

Description of functions

If the resistance between the data link connector 6 (CANH) and 14(CANL) is less than 57 Ω, there may be a line-to-line short in CAN bus.

Symptoms	Possible cause
Resistance between the data link connectors 6 (CANH) ←→14 (CANL) is less than 57 Ω	• Short between CAN bus main lines • Short between CAN bus sub-lines • Main body ECM (Multiplex network body computer) • Combination meter ASSY • Collation ECM (Smart key computer ASSY) *1 • Engine control computer • Transmission control computer ASSY *2 • Brake actuator ASSY • Spiral cable SUB-ASSY (with sensor) • Power steering computer ASSY • Air conditioner amplifier ASSY *3 • Airbag sensor ASSY • PSP (Accessory bus buffer) • Wiring harness connector (CAN J/C1) • Wiring harness connector (CAN J/C2)

*1: With smart entry

*2: Transmission A/T

*3: For automatic air conditioning system

Circuit figure

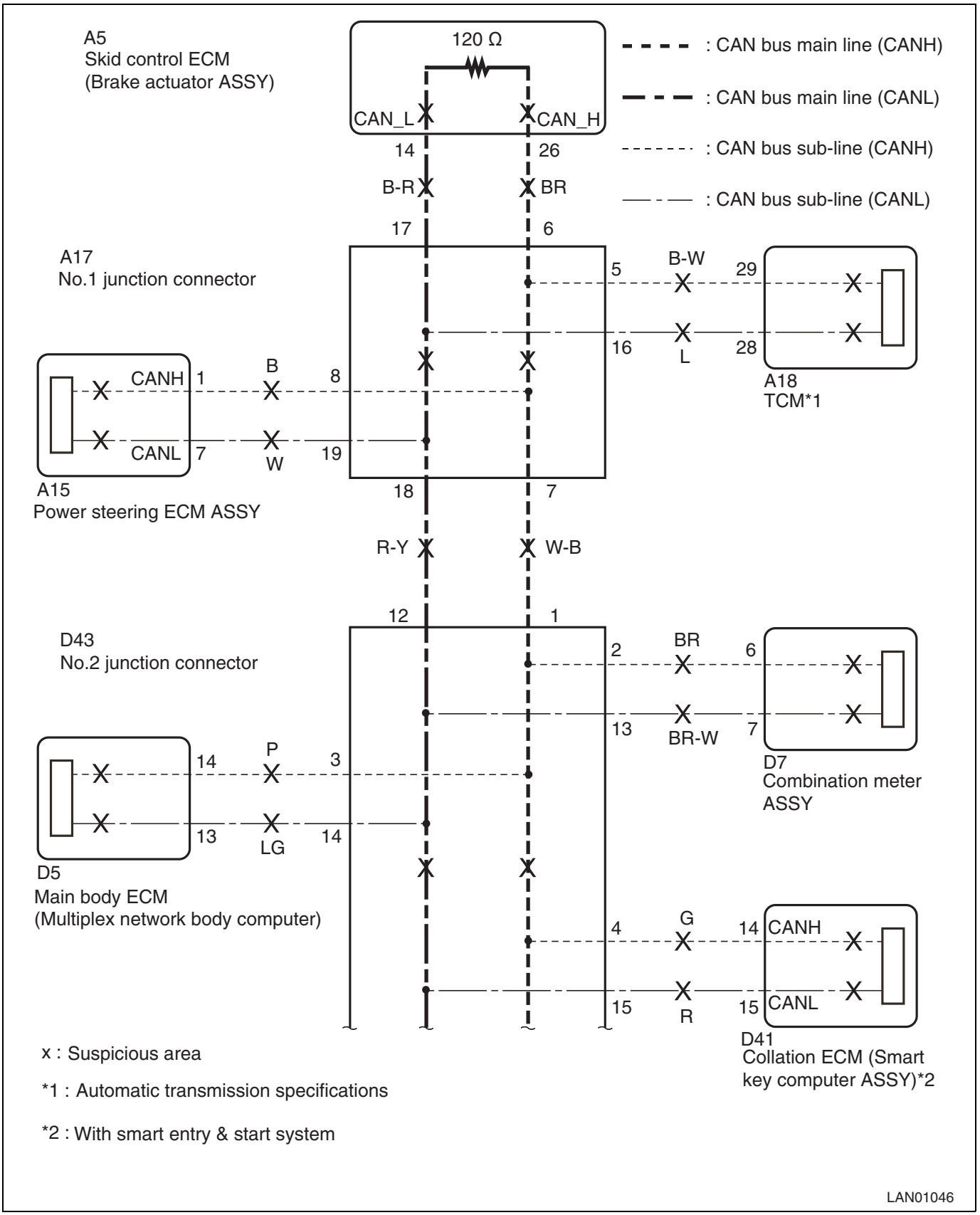

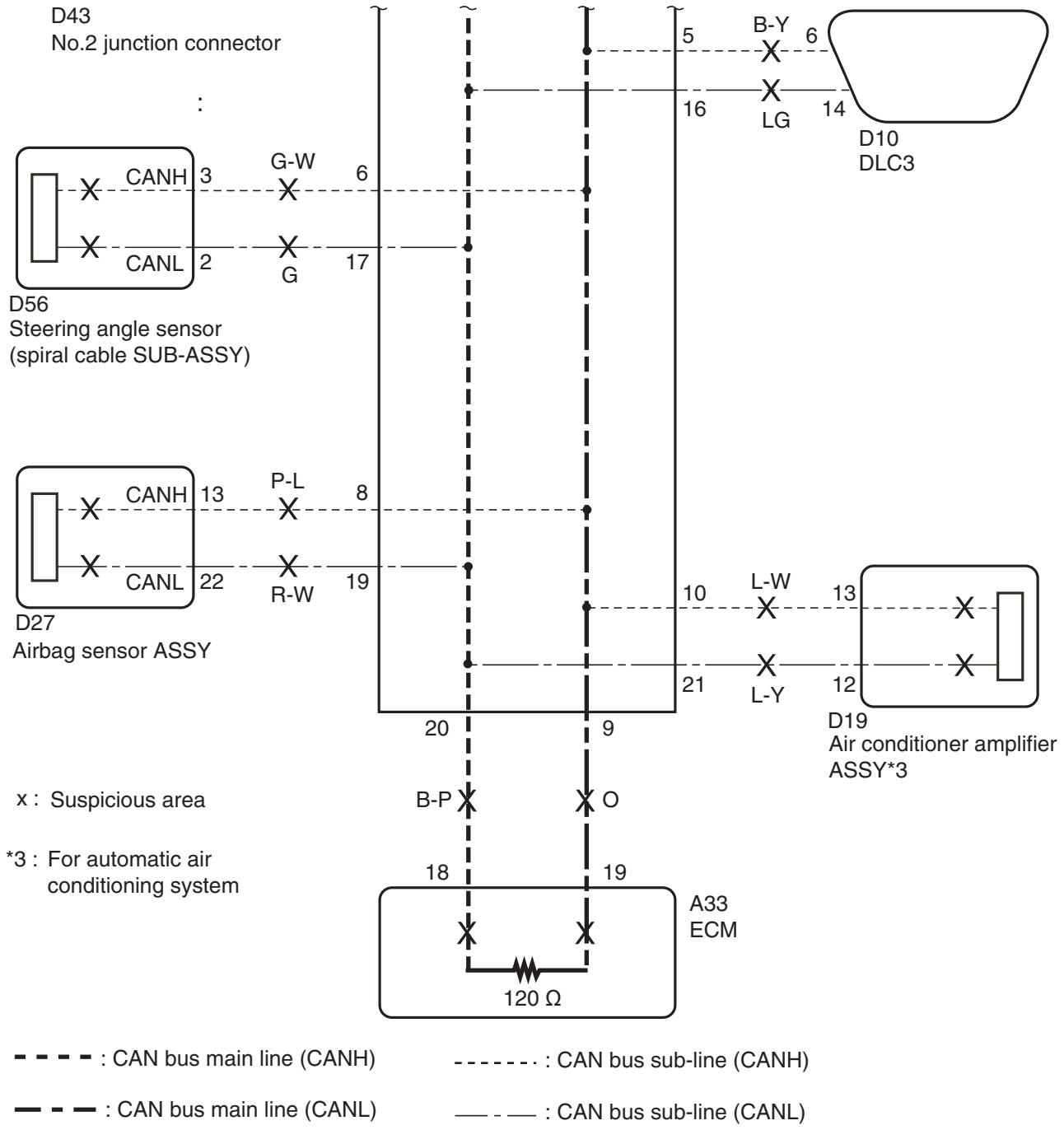

Inspection steps

CAUTION:

- Before measuring the resistance of CAN bus, turn the ignition OFF and leave the vehicle as is for at least one minute without operating keys, switches, and doors. Disconnect the battery and wait for another one minute or more.
- If DTC related with CAN communication system is output, always start the troubleshooting according to the procedure described in "How to troubleshoot". (Refer to NW - 30)
- When the repair is complete, follow DTC check procedure to confirm the same DTC does not recur.
  DTC check procedure: Wait 60 seconds or more after IG ON, then drive the vehicle at 15 km/h or more for at least one second.
- After turning the ignition switch to OFF, you may have to wait for a while before disconnecting the battery terminals. Check appropriate precautions for battery terminal disconnection before proceeding. (Refer to IN - 6)

NOTE:
- Before disconnecting a connector, check for loose or unplugged connection by pushing back the connector case.
- After disconnecting the connector, make sure that its terminal and the case have no damage, deformation, or corrosion.

1	Checking for line-to-line short in CAN bus (Engine control computer)

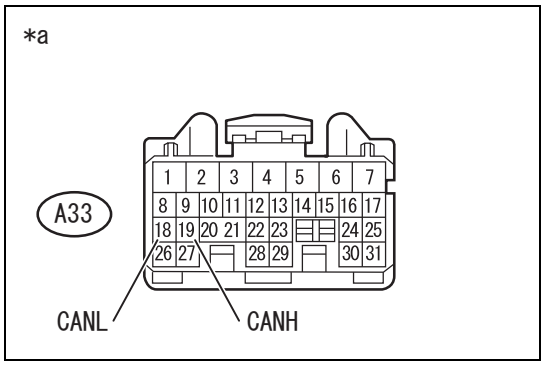

(1) Disconnect the battery ground terminal.

(2) Disconnect the vehicle wiring harness connector A33 from the engine control computer.

(3) Measure the resistance between the terminals.

Resistance

Inspection terminals (Terminal symbol)	Inspection conditions	Standard value
A33-19 - A33-18	Disconnection of the battery ground terminal	114 to 126 Ω

Captions in illustration

*a	Front side of vehicle wiring harness connector (Engine control computer)

NG → Go to Step 2

OK

Replacement of the engine control computer (Refer to ES - 670)

2	Checking for line-to-line short in CAN bus (Brake actuator ASSY)

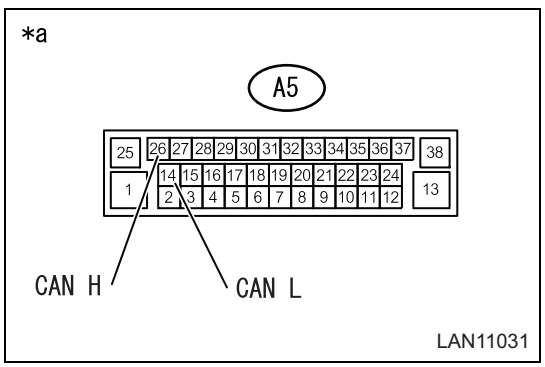

(1) Reconnect the vehicle wiring harness connector A33 to the engine control computer.

(2) Disconnect the vehicle harness connector A5 from the brake actuator ASSY.

(3) Measure the resistance between the terminals.

Resistance

Inspection terminals (Terminal symbol)	Inspection conditions	Standard value
A5-26 - A5-14	Disconnection of the battery ground terminal	114 to 126 Ω

Captions in illustration

*a	Front side of vehicle wiring harness connector (Brake actuator ASSY)

NG → Go to Step 3

OK

Replacement of the brake actuator ASSY (Refer to BC - 93)

3	Checking for line-to-line short in CAN bus (Wiring harness connector (CAN J/C2))

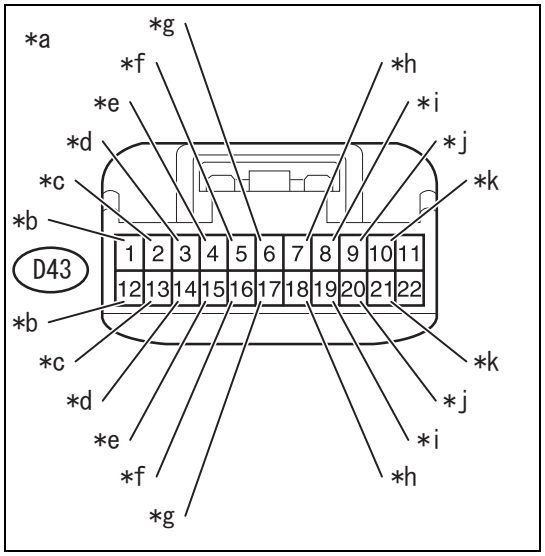

(1) Reconnect the vehicle wiring harness connector A5 to the brake actuator ASSY.

(2) Disconnect the vehicle harness connector D43 from the wiring harness connector (CAN J/C2).

(3) Measure the resistance between the terminals.

Resistance

Inspection terminals (Terminal symbol)	Inspection conditions	Standard value	Connecting to
D43-1 - D43-12	Disconnection of the battery ground terminal	114 to 126 Ω	Wiring harness connector (CAN J/C1)
D43-2 - D43-13	Disconnection of the battery ground terminal	200 Ωor more	Combination meter ASSY
D43-3 - D43-14	Disconnection of the battery ground terminal	200 Ωor more	Main body ECM (Multiplex network body computer)
D43-4 - D43-15	Disconnection of the battery ground terminal	200 Ωor more	Collation ECM (Smart key computer ASSY)
D43-5 - D43-16	Disconnection of the battery ground terminal	1 M Ωor more	Data link connector
D43-6 - D43-17	Disconnection of the battery ground terminal	200 Ωor more	Spiral cable SUB-ASSY (with sensor)
D43-8 - D43-19	Disconnection of the battery ground terminal	200 Ωor more	Airbag sensor ASSY
D43-9 - D43-20	Disconnection of the battery ground terminal	114 to 126 Ω	Engine control computer
D43-10 - D43-21	Disconnection of the battery ground terminal	200 Ωor more	Air conditioner amplifier ASSY

Captions in illustration

*a	Front side of vehicle wiring harness connector (Wiring harness connector (CAN J/C2))
*b	To the wiring harness connector (CAN J/C1)
*c	To the combination meter ASSY
*d	To the main body ECM (Multiplex network body computer)
*e	To the collation ECM (Smart key computer ASSY)
*f	To the data link connector
*g	To the spiral cable SUB-ASSY (with sensor)
*i	To the airbag sensor ASSY
*j	To the engine control computer

*k	To the air conditioner amplifier ASSY

Criteria

Result	Go to
OK (No line-to-line short circuit)	A
NG (Line-to-line short in the main line to the wiring harness connector (CAN J/C1))	B
NG (Line-to-line short in the main line to the engine control computer)	C
NG (Line-to-line short in the line to ECM and sensor)	D
NG (Line-to-line short in the sub-line to the data link connector)	E

B → Go to Step 4

C → Go to Step 6

D → Go to Step 5

E → Repair or replacement of CAN bus sub-line or connector

A

Replacement of the wiring harness connector (CAN J/C2)

4	Checking for line-to-line short in CAN bus (Wiring harness connector (CAN J/C1))

(1) Disconnect the vehicle harness connector A17 from the wiring harness connector (CAN J/C1).

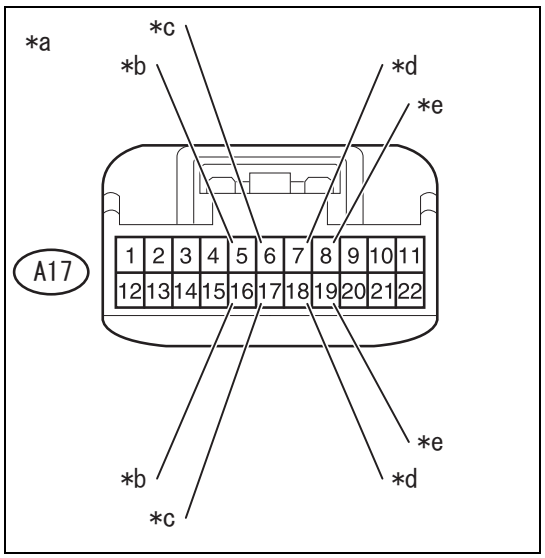

(2) Measure the resistance between the terminals.
Resistance

Inspection terminals (Terminal symbol)	Inspection conditions	Standard value	Connecting to
A17-5 - A17-16	Disconnection of the battery ground terminal	200 Ωor more	Transmission control computer ASSY
A17-6 - A17-17	Disconnection of the battery ground terminal	114 to 126 Ω	Skid control ECM (Brake actuator ASSY)
A17-7 - A17-18	Disconnection of the battery ground terminal	1 MΩ or more	Wiring harness connector (CAN J/C2)
A17-8 - A17-19	Disconnection of the battery ground terminal	200 Ωor more	Power steering computer ASSY

Captions in illustration

*a	Front side of vehicle wiring harness connector Wiring harness connector (CAN J/C1)
*b	To the transmission control computer ASSY

*c	To the skid control ECM (Brake actuator ASSY)
*d	To CAN No.2 junction connector
*e	To the power steering computer ASSY

Criteria

Result	Go to
OK (No line-to-line short circuit)	A
NG (Line-to-line short in the main line to the wiring harness connector (CAN J/C2))	B
NG (Line-to-line short in the main line to the skid control ECM (Brake actuator ASSY))	C
NG (Line-to-line short in the line to ECM)	D

B → Repair or replacement of CAN bus main line or connector (Wiring harness connector (CAN J/C2) - Wiring harness connector (CAN J/C1))

C → Go to Step 7

D → Go to Step 5

A

Replacement of the wiring harness connector (CAN J/C1)

5	Checking for line-to-line short in CAN bus (ECM and sensor line)

(1) Reconnect all connections to the wiring harness connectors (CAN J/C1 and CAN J/C2).
(2) From the ECM and sensor relevant with line-to-line short circuit, disconnect the connectors with CAN-H and CAN-L terminals. (Refer to NW - 67for ECM terminal arrangement)
NOTE:
In case of more than one line-to-line short circuit, disconnect all connectors including CANH and CANL terminals of the ECM and sensor.

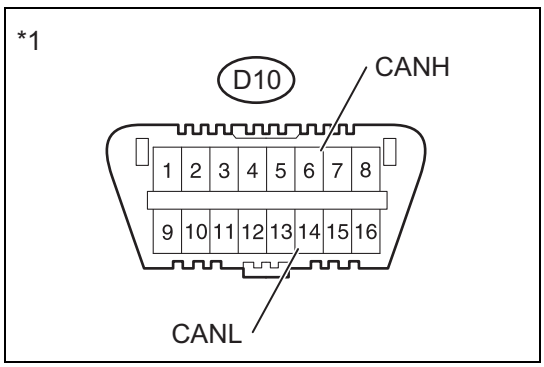

(3) Measure the resistance between the terminals.
Resistance

Inspection terminals (Terminal symbol)	Inspection conditions	Standard value
D10-6 - D10-14	Disconnection of the battery ground terminal	57 to 63 Ω

Captions in illustration

*1	Data link connector

NOTE:
- If the resistance is less than 57 Ωwith the ECM and sensor connected (line-to-line short), there may be a ECM internal short.
- If the resistance returns to normal with the ECM and sensor disconnected, there may be an internal short within the ECM and sensor.

- When more than one ECM or sensor is disconnected, reconnect the part one by one to check the resistance. If an ECM or sensor shows an abnormal value, replace it. After that, reconnect all ECMs and sensors to check if the resistance returns to normal.
- If the resistance does not return to normal with the ECM and sensor disconnected, repair or replace the wire harness and the connector in which line-to-line short has been detected.

NG → Repair or replacement of the wiring harness

OK

Replacement of the ECM/sensor

NW

6	Check for line-to-line short in CAN bus termination (Engine control computer)

(1) Disconnect the vehicle wiring harness connector A33 from the engine control computer.
(2) Measure the resistance between terminations.

Resistance

Inspection terminals (Terminal symbol)	Inspection conditions	Standard value	Connecting to
D43-9 - D43-20	Battery terminal is disconnected	1 MΩor more	Engine control computer

NG → Repair or replacement of the wiring harness and the connector where the line-to-line short was confirmed.

OK

Replacement of the engine control computer

7	Check for line-to-line short in CAN bus terminations (Brake actuator ASSY)

(1) Disconnect the vehicle wiring harness connector A5 of the brake actuator ASSY.
(2) Measure the resistance between terminations.

Resistance

Inspection terminals (Terminal symbol)	Inspection conditions	Standard value	Connecting to
A17-6 - A17-17	Battery terminal is disconnected	1 MΩor more	Brake actuator ASSY

NG → Repair or replacement of the wiring harness and the connector where the line-to-line short was confirmed.

OK

Replacement of the brake actuator ASSY

Check for short to battery

Description of functions

Main line or sub-line may be shorted to battery circuit or shorted to battery circuit within one of the control modules.

Symptoms	Possible cause
The voltage between the data link connector 6 (CANH), 14 (CANL) ←→chassis ground is 5 V or more	• CAN bus main line short to +B • CAN bus sub-line short to +B • Main body ECM (Multiplex network body computer) • Combination meter ASSY • Collation ECM (Smart key computer ASSY) *1 • Engine control computer • Transmission control computer ASSY *2 • Brake actuator ASSY • Spiral cable SUB-ASSY (with sensor) • Power steering computer ASSY • Air conditioner amplifier ASSY *3 • Airbag sensor ASSY • PSP (Accessory bus buffer) • Wiring harness connector (CAN J/C1) • Wiring harness connector (CAN J/C2)

*1: With smart entry

*2: Transmission A/T

*3: For automatic air conditioning system

Circuit figure

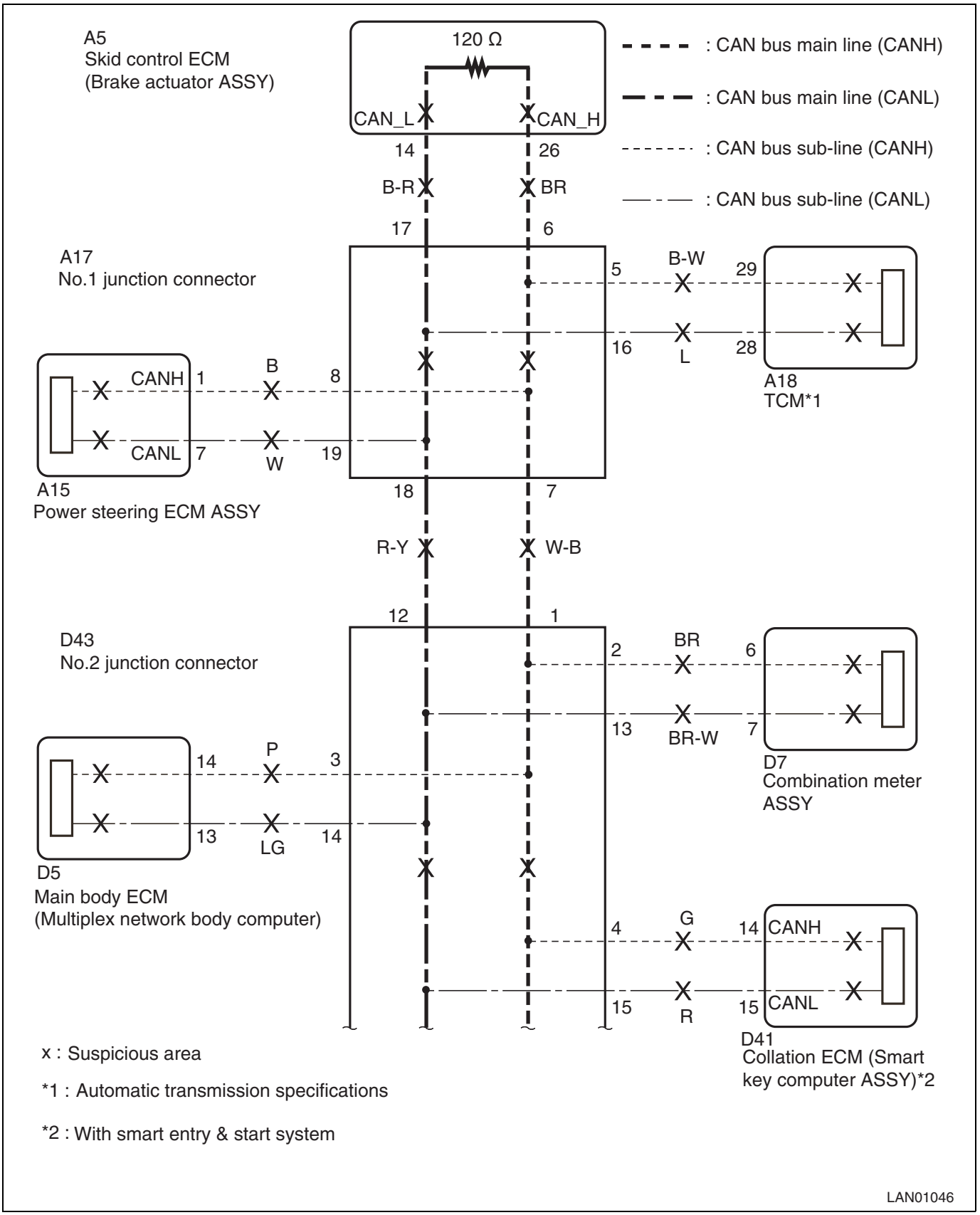

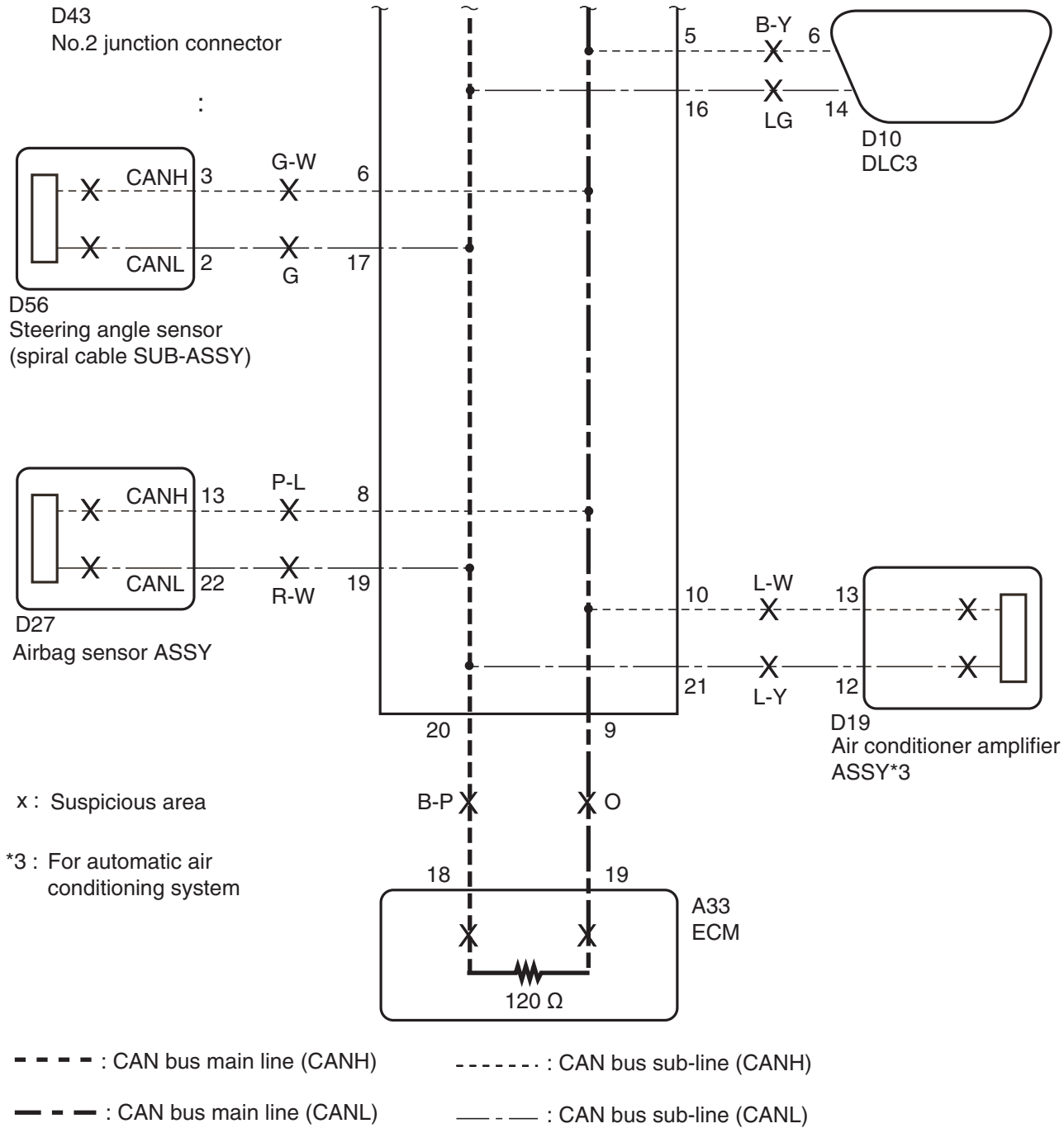

Inspection steps

CAUTION:

- Before measuring the resistance of CAN bus, turn the ignition OFF and leave the vehicle as is for at least one minute without operating keys, switches, and doors. Disconnect the battery and wait for another one minute or more.
- If DTC related with CAN communication system is output, always start the troubleshooting according to the procedure described in "How to troubleshoot". (Refer to NW - 30)
- When the repair is complete, follow DTC check procedure to confirm the same DTC does not recur.
  DTC check procedure: Wait 60 seconds or more after IG ON, then drive the vehicle at 15 km/h or more for at least one second.
- After turning the ignition switch to OFF, you may have to wait for a while before disconnecting the battery terminals. Check appropriate precautions for battery terminal disconnection before proceeding. (Refer to IN - 6)

NOTE:

- Before disconnecting a connector, check for loose or unplugged connection by pushing back the connector case.
- After disconnecting the connector, make sure that its terminal and the case have no damage, deformation, or corrosion.

1	Checking for CAN bus line short to +B (Wiring harness connector (CAN J/C2))

(1) Reconnect the vehicle wiring harness connectors: A5 to the brake actuator ASSY and A33 to the engine control computer.

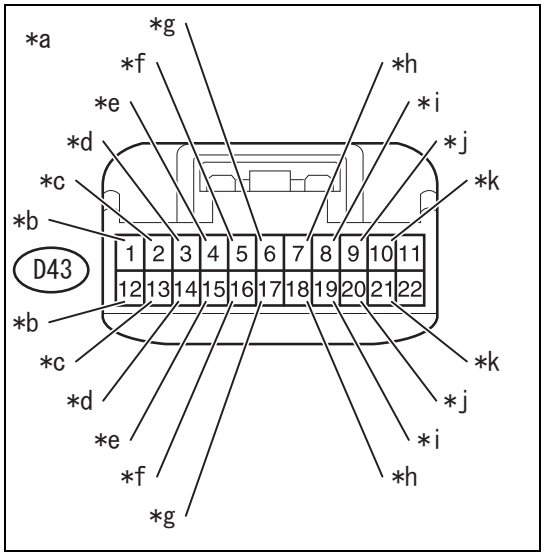

(2) Disconnect the vehicle harness connector D43 from the wiring harness connector (CAN J/C2).

(3) Measure the resistance between the terminal and +B.

Resistance

Inspection terminals	Inspection conditions	Standard value	Connecting to
D43-1 - +B	Disconnection of the battery ground terminal	6 kΩ or more	Wiring harness connector (CAN J/C1)
D43-12 - +B			
D43-2 - +B	Disconnection of the battery ground terminal	6 kΩ or more	Combination meter ASSY
D43-13 - +B			
D43-3 - +B	Disconnection of the battery ground terminal	6 kΩ or more	Main body ECM (Multiplex network body computer)
D43-14 - +B			
D43-4 - +B	Disconnection of the battery ground terminal	6 kΩ or more	Collation ECM (Smart key computer ASSY)
D43-15 - +B			
D43-5 - +B	Disconnection of the battery ground terminal	6 kΩ or more	Data link connector
D43-16 - +B			
D43-17 - +B	Disconnection of the battery ground terminal	6 kΩ or more	Spiral cable SUB-ASSY (with sensor)
D43-6 - +B			
D43-8 - +B	Disconnection of the battery ground terminal	6 kΩ or more	Airbag sensor ASSY
D43-19 - +B			
D43-9 - +B	Disconnection of the battery ground terminal	6 kΩ or more	Engine control computer
D43-20 - +B			
D43-10 - +B	Disconnection of the battery ground terminal	6 kΩ or more	Air conditioner amplifier ASSY
D43-21 - +B			

Captions in illustration

*a	Front side of vehicle wiring harness connector (Wiring harness connector (CAN J/C2))
*b	To CAN No.1 junction connector
*c	To the combination meter ASSY
*d	To the main body ECM (Multiplex network body computer)
*e	To the collation ECM (Smart key computer ASSY)
*f	To the data link connector
*g	To the spiral cable SUB-ASSY (with sensor)
*h	To the accessory connector

*i	To the airbag sensor ASSY
*j	To the engine control computer
*k	To the air conditioner amplifier ASSY

Criteria

Result	Go to
OK (No short to battery)	A
NG (Battery short in the main line to the wiring harness connector (CAN J/C1))	B
NG (Battery short in the main line to the engine control computer)	C
NG (Battery short in the line to ECM and sensor)	D
NG (Battery short in the sub-line to the data link connector or PSP (Accessory bus buffer))	E

B → Go to Step 2

C → Go to Step 5

D → Go to Step 3

E → Repair or replacement of CAN bus sub-line or connector

A

Replacement of the wiring harness connector (CAN J/C2)

2	Checking for CAN bus line short to +B (Wiring harness connector (CAN J/C1))

(1) Disconnect the vehicle harness connector A17 from the wiring harness connector (CAN J/C1).

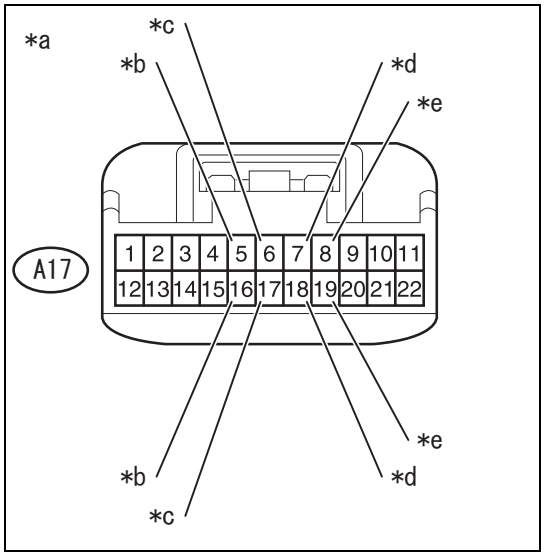

(2) Measure the resistance between the terminal and +B.
Resistance

Inspection terminals	Inspection conditions	Standard value	Connecting to
A17-5 - +B	Disconnection of the battery ground terminal	6 kΩ or more	Transmission control computer ASSY
A17-16 - +B			
A17-6 - +B	Disconnection of the battery ground terminal	6 kΩ or more	Skid control ECM (Brake actuator ASSY)
A17-17 - +B			
A17-7 - +B	Disconnection of the battery ground terminal	6 kΩ or more	Wiring harness connector (CAN J/C2)
A17-18 - +B			
A17-8 - +B	Disconnection of the battery ground terminal	6 kΩ or more	Power steering computer ASSY
A17-19 - +B			

Captions in illustration

*a	Front side of vehicle wiring harness connector Wiring harness connector (CAN J/C1)

*b	To the transmission control computer ASSY
*c	To the skid control ECM (Brake actuator ASSY)
*d	To the wiring harness connector (CAN J/C2)
*e	To the power steering computer ASSY

Criteria

Result	Go to
OK (No short to battery)	A
NG (Battery short in the main line to the wiring harness connector (CAN J/C2))	B
NG (Battery short in the main line to the skid control ECM (Brake actuator ASSY))	C
NG (Battery short in the line to ECM)	D

B → Repair or replacement of CAN bus main line or connector (Wiring harness connector (CAN J/C2) - Wiring harness connector (CAN J/C1))

C → Go to Step 4

D → Go to Step 3

A → Replacement of the wiring harness connector (CAN J/C1)

3	Checking for CAN bus short to +B (ECM/sensor)

(1) Reconnect all connections to the wiring harness connectors (CAN J/C1 and CAN J/C2).
(2) From the ECM and sensor relevant with line-to-line short circuit, disconnect the connectors with CAN-H and CAN-L terminals. (Refer to NW - 67for ECM terminal arrangement)
NOTE:
In case of more than one +B short circuit, disconnect all connectors including CANH and CANL terminals of the ECM and sensor.

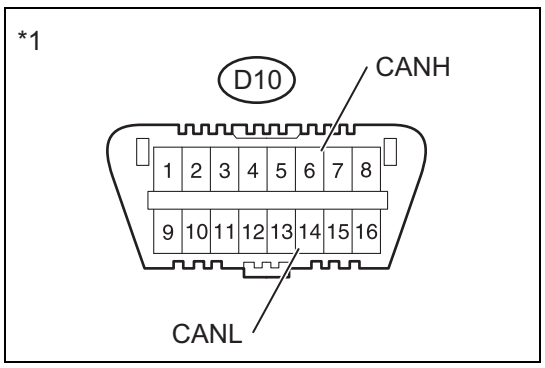

(3) Measure the resistance between the terminals.
Resistance

Inspection terminals (Terminal symbol)	Inspection conditions	Standard value
D10-6 - D10-16	Disconnection of the battery ground terminal	6 kΩ or more
D10-14 - D10-16		

Captions in illustration

*1	Data link connector

NOTE:
- If the resistance returns to normal with the ECM and sensor disconnected, there may be an internal short within the ECM and sensor.
- When more than one ECM or sensor is disconnected, reconnect the part one by one to check the resistance. If an ECM or sensor

shows an abnormal value, replace it. After that, reconnect all ECMs and sensors to check if the resistance returns to normal.

- If the resistance does not return to normal with the ECM/sensor disconnected, repair or replace the wire harness and connector in which +B short has been detected.

NG → Repair or replacement of the wiring harness

OK

Replacement of the ECM/sensor

4	Checking for +B short in CAN bus termination (Brake actuator ASSY)

(1) Disconnect the vehicle wiring harness connector A5 of the brake actuator ASSY.
(2) Measure the resistance between the terminal and +B.
Resistance

Inspection terminals	Inspection conditions	Standard value	Connecting to
A17-6 - +B	Disconnection of the battery ground terminal	6 kΩ or more	Brake actuator ASSY
A17-17 - +B			

NG → Repair or replacement of the wiring harness and the connector in which +B short has been detected

OK

Replacement of the brake actuator ASSY

5	Checking for +B short in CAN bus termination (Engine control computer)

(1) Disconnect the vehicle wiring harness connector A33 from the engine control computer.
(2) Measure the resistance between the terminal and +B.
Resistance

Inspection terminals	Inspection conditions	Standard value	Connecting to
D43-9 - +B	Disconnection of the battery ground terminal	6 kΩ or more	Engine control computer
D43-20 - +B			

NG → Repair or replacement of the wiring harness and the connector in which +B short has been detected

OK

Replacement of the engine control computer

Check for short to ground

Description of functions

Main line or sub-lines may be shorted to ground or shorted to ground within one of the control modules.

Symptoms	Possible cause
Resistance between the data link connector 6 (CANH), 14 (CANL) ←→chassis ground is 10 Ωor less	• CAN bus main line short to GND • CAN bus sub-line short to GND • Main body ECM (Multiplex network body computer) • Combination meter ASSY • Collation ECM (Smart key computer ASSY) *1 • Engine control computer • Transmission control computer ASSY *2 • Brake actuator ASSY • Spiral cable SUB-ASSY (with sensor) • Power steering computer ASSY • Air conditioner amplifier ASSY *3 • Airbag sensor ASSY • PSP (Accessory bus buffer) • Wiring harness connector (CAN J/C1) • Wiring harness connector (CAN J/C2)

*1: With smart entry

*2: Transmission A/T

*3: For automatic air conditioning system

Circuit figure

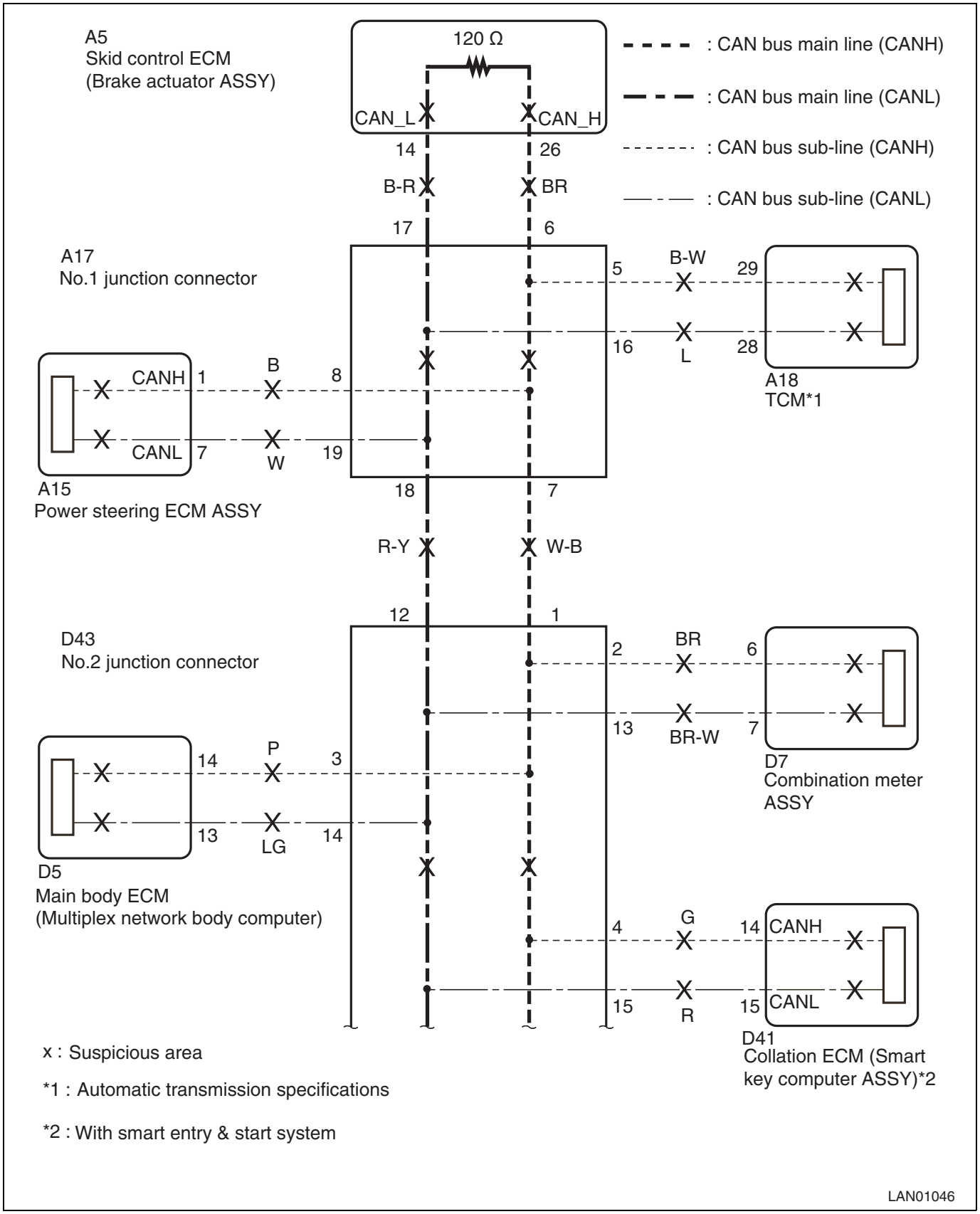

NW

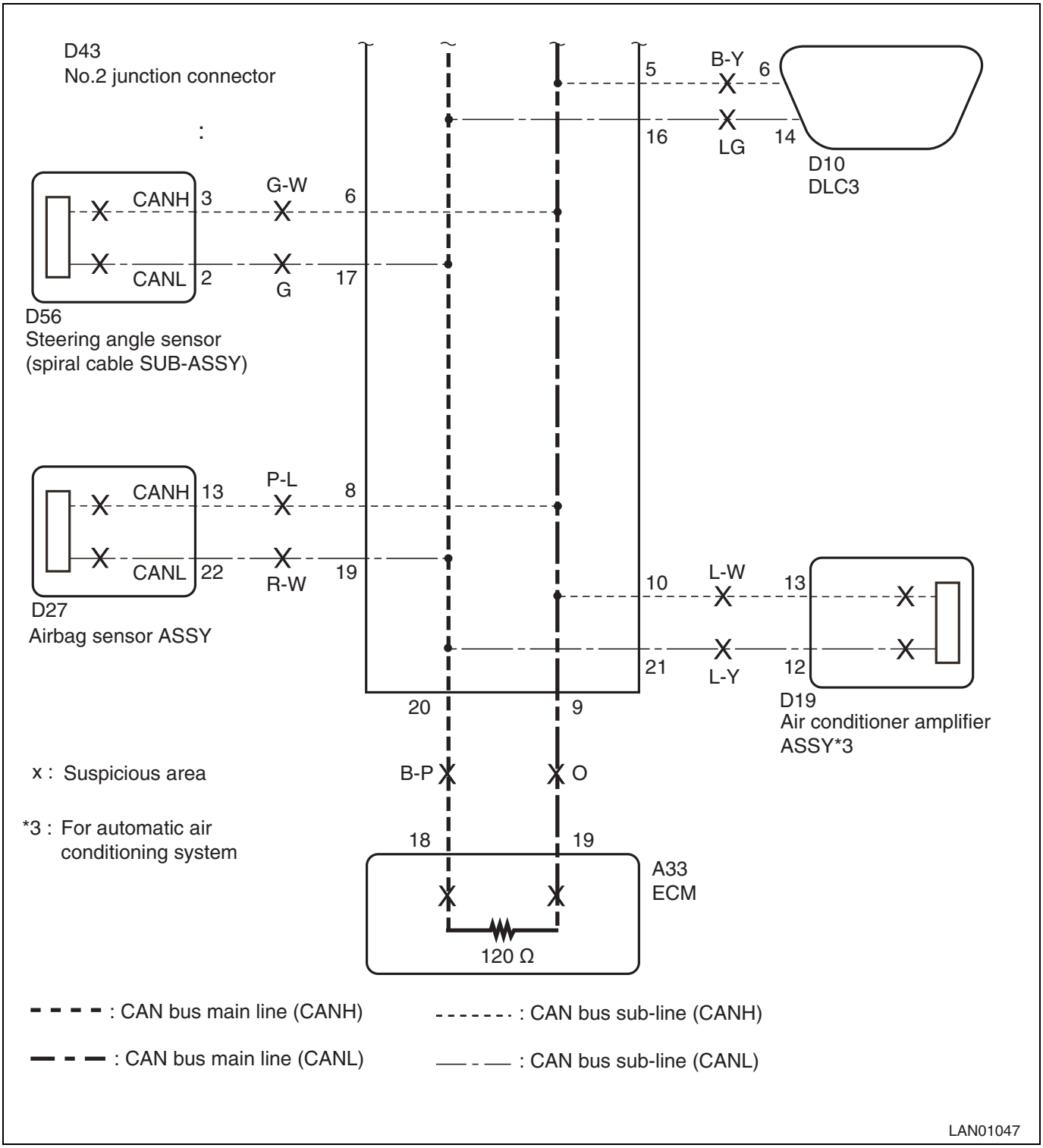

Inspection steps

CAUTION:

- Before measuring the resistance of CAN bus, turn the ignition OFF and leave the vehicle as is for at least one minute without operating keys, switches, and doors. Disconnect the battery and wait for another one minute or more.
- If DTC related with CAN communication system is output, always start the troubleshooting according to the procedure described in "How to troubleshoot". (Refer to NW - 30)
- When the repair is complete, follow DTC check procedure to confirm the same DTC does not recur.
  DTC check procedure: Wait 60 seconds or more after IG ON, then drive the vehicle at 15 km/h or more for at least one second.
- After turning the ignition switch to OFF, you may have to wait for a while before disconnecting the battery terminals. Check appropriate precautions for battery terminal disconnection before proceeding. (Refer to IN - 6)

NOTE:

- Before disconnecting a connector, check for loose or unplugged connection by pushing back the connector case.
- After disconnecting the connector, make sure that its terminal and the case have no damage, deformation, or corrosion.

1	Checking for CAN bus line short to GND (Wiring harness connector (CAN J/C2))

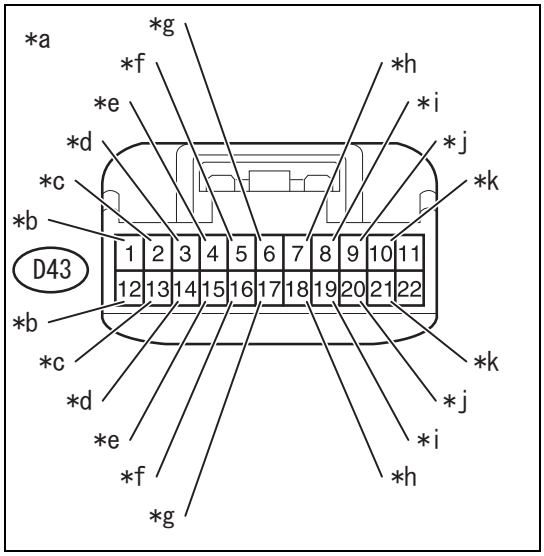

(1) Reconnect the vehicle wiring harness connectors: A5 to the brake actuator ASSY and A33 to the engine control computer.

(2) Disconnect the vehicle harness connector D43 from the wiring harness connector (CAN J/C2).

(3) Measure the resistance between the terminal and GND.

Resistance

Inspection terminals	Inspection conditions	Standard value	Connecting to
D43-1 - GND	Disconnection of the battery ground terminal	200 Ωor more	Wiring harness connector (CAN J/C1)
D43-12 - GND			
D43-2 - GND	Disconnection of the battery ground terminal	200 Ωor more	Combination meter ASSY
D43-13 - GND			
D43-3 - GND	Disconnection of the battery ground terminal	200 Ωor more	Main body ECM (Multiplex network body computer)
D43-14 - GND			
D43-4 - GND	Disconnection of the battery ground terminal	200 Ωor more	Collation ECM (Smart key computer ASSY)
D43-15 - GND			
D43-5 - GND	Disconnection of the battery ground terminal	200 Ωor more	Data link connector
D43-16 - GND			
D43-6 - GND	Disconnection of the battery ground terminal	200 Ωor more	Spiral cable SUB-ASSY (with sensor)
D43-17 - GND			
D43-8 - GND	Disconnection of the battery ground terminal	200 Ωor more	Airbag sensor ASSY
D43-19 - GND			
D43-9 - GND	Disconnection of the battery ground terminal	200 Ωor more	Engine control computer
D43-20 - GND			
D43-10 - GND	Disconnection of the battery ground terminal	200 Ωor more	Air conditioner amplifier ASSY
D43-21 - GND			

Captions in illustration

*a	Front side of vehicle wiring harness connector (Wiring harness connector (CAN J/C2))
*b	To the wiring harness connector (CAN J/C1)
*c	To the combination meter ASSY
*d	To the main body ECM (Multiplex network body computer)
*e	To the collation ECM (Smart key computer ASSY)
*f	To the data link connector
*g	To the spiral cable SUB-ASSY (with sensor)
*h	To the accessory connector

*i	To the airbag sensor ASSY
*j	To the engine control computer
*k	To the air conditioner amplifier ASSY

Criteria

Result	Go to
OK (No short to ground)	A
NG (Ground short in the main line to the wiring harness connector (CAN J/C1))	B
NG (Ground short in the main line to the engine control computer)	C
NG (Ground short in the line to ECM and sensor)	D
NG (Ground short in the sub-line to the data link connector)	E

NW

B → Go to Step 2

C → Go to Step 5

D → Go to Step 3

E → Repair or replacement of CAN bus sub-line or connector

A

Replacement of the wiring harness connector (CAN J/C2)

2	Checking for CAN bus line short to GND (Wiring harness connector (CAN J/C1))

(1) Disconnect the vehicle harness connector A17 from the wiring harness connector (CAN J/C1).

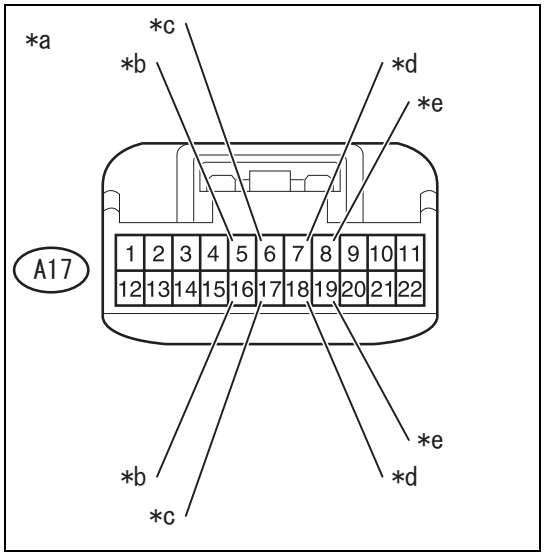

(2) Measure the resistance between the terminal and GND.
Resistance

Inspection terminals	Inspection conditions	Standard value	Connecting to
A17-5 - GND	Disconnection of the battery ground terminal	200 Ωor more	Transmission control computer ASSY
A17-16 - GND			
A17-6 - GND	Disconnection of the battery ground terminal	200 Ωor more	Skid control ECM (Brake actuator ASSY)
A17-17 - GND			
A17-7 - GND	Disconnection of the battery ground terminal	200 Ωor more	Wiring harness connector (CAN J/C2)
A17-18 - GND			
A17-8 - GND	Disconnection of the battery ground terminal	200 Ωor more	Power steering computer ASSY
A17-19 - GND			

Captions in illustration

*a	Front side of vehicle wiring harness connector Wiring harness connector (CAN J/C1)

*b	To the transmission control computer ASSY
*c	To the skid control ECM (Brake actuator ASSY)
*d	To the wiring harness connector (CAN J/C2)
*e	To the power steering computer ASSY

Criteria

Result	Go to
OK (No short to ground)	A
NG (Ground short in the main line to the wiring harness connector (CAN J/C2))	B
NG (Ground short in the main line to the skid control ECM (Brake actuator ASSY))	C
NG (Ground short in the line to ECM)	D

B → Repair or replacement of CAN bus main line or connector (Wiring harness connector (CAN J/C2) - Wiring harness connector (CAN J/C1))

C → Go to Step 4

D → Go to Step 3

A

Replacement of the wiring harness connector (CAN J/C1)

3	Checking for CAN bus line short to GND (ECM/sensor)

(1) Reconnect all connections to the wiring harness connectors (CAN J/C1 and CAN J/C2).
(2) From the ECM and sensor relevant with GND short circuit, disconnect the connectors with CAN-H and CAN-L terminals. (Refer to NW - 67for ECM terminal arrangement)
NOTE:
In case of more than one GND short circuit, disconnect all connectors including CANH and CANL terminals of the ECM and sensor.

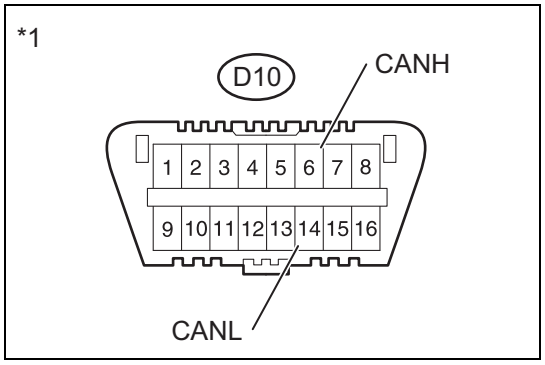

(3) Measure the resistance between the terminals.
Resistance

Inspection terminals	Inspection conditions	Standard value
D10-6 - GND	Disconnection of the battery ground terminal	200 Ωor more
D10-14 - GND		

Captions in illustration

*1	Data link connector

NOTE:
- If the resistance returns to normal with the ECM and sensor disconnected, there may be an internal short within the ECM and sensor.
- When more than one ECM or sensor is disconnected, reconnect the part one by one to check the resistance. If an ECM or sensor

shows an abnormal value, replace it. After that, reconnect all ECMs and sensors to check if the resistance returns to normal.

- If the resistance does not return to normal with the ECM/sensor disconnected, repair or replace the wire harness and connector in which GND short has been detected.

NG → Repair or replacement of the wiring harness

OK

Replacement of the ECM/sensor

4	Checking for GND short in CAN bus termination (Brake actuator ASSY)

NW

(1) Disconnect the vehicle wiring harness connector A5 of the brake actuator ASSY.
(2) Measure the resistance between the terminal and GND.
Resistance

Inspection terminals	Inspection conditions	Standard value	Connecting to
A17-6 - GND	Disconnection of the battery ground terminal	200 Ωor more	Brake actuator ASSY
A17-17 - GND			

NG → Repair or replacement of the wiring harness and the connector in which GND short has been detected

OK

Replacement of the brake actuator ASSY

5	Checking for GND short in CAN bus termination (Engine control computer)

(1) Disconnect the vehicle wiring harness connector A33 from the engine control computer.
(2) Measure the resistance between the terminal and GND.
Resistance

Inspection terminals	Inspection conditions	Standard value	Connecting to
D43-9 - GND	Disconnection of the battery ground terminal	200 Ωor more	Engine control computer
D43-20 - GND			

NG → Repair or replacement of the wiring harness and the connector in which GND short has been detected

OK

Replacement of the engine control computer

DTC	U1201	High-speed CAN failure/error counter failure

Circuit description

Communication is unstable because of high-speed CAN communication error.

DTC No.	Detecting conditions
U1201	Communication is unstable because of high-speed CAN communication error.

Inspection steps

CAUTION:

Perform all of steps to Step 9 in "How to troubleshoot" before performing this steps. (Refer to NW - 30)

1	Checking CAN communication circuit

(1) Check CAN communication circuit. (Refer to NW - 44)
Criteria: No fault is found.

NO > Follow the repair procedure described in "CAN communication circuit check".

YES

2	DTC check

(1) Start the engine.
(2) Use SSM4 to read DTC detected on CAN system.
Criteria: U0073 is not output

NO > Perform the diagnosis of U0073. (Refer to NW - 136)

YES

3	DTC check

(1) Use SSM4 to read DTC detected on CAN system.
Criteria: U1201 is output

NO > A temporary communication error may have occurred. Clear the memory.

YES

4	DTC check

(1) Turn the ignition switch OFF and then ON again.
(2) Use SSM4 to read DTC detected on CAN system.
Criteria: U1201 is output

NO > A temporary communication error may have occurred. Clear the memory.

YES

5	Control module check

(1) Turn the ignition switch to OFF.
(2) Disconnect the control modules in the proper sequence.
NOTE:
When disconnecting ECM or brake actuator ASSY, connect the resistance of 120 Ωbetween CAN-Hi and CAN-Lo to substitute a termination resistor.
(3) Turn the ignition switch to ON.
(4) Use SSM4 to read DTC detected on CAN system.
Criteria: U1201 is no longer output

NO → Repeat Step 5 until U1201 is not detected.

YES

Replace the control module which has been removed when no DTC is output.

DTC	U0073	Control Module Communication Bus "A" Off

Circuit description
Lost communication due to high-speed CAN communication error.

DTC No.	Detecting conditions
U0073	Communication is interrupted due to high-speed CAN communication error.

Inspection steps
CAUTION:
Perform all of steps to Step 9 in "How to troubleshoot" before performing this steps. (Refer to NW - 30)

1	Check DTC

(1) Start the engine.
(2) Use SSM4 to read DTC detected on CAN system.
Criteria: U0073 is output

NO → A temporary communication error may have occurred. Clear the memory.

YES

2	Checking CAN communication circuit

(1) Check CAN communication circuit. (Refer to NW - 44)
Criteria: No fault is found.

NO → Follow the repair procedure described in "CAN communication circuit check".

YES

3	DTC check

(1) Perform the inspection using DTC check sheet.
(2) Use SSM4 to read DTC detected on CAN system.
Criteria: U0073 is output

NO → System is normal.

YES

4	Control module check

(1) Turn the ignition switch to OFF.
(2) Disconnect the control modules in the proper sequence.
NOTE:
When disconnecting ECM or brake actuator ASSY, connect the resistance of 120 Ωbetween CAN-Hi and CAN-Lo to substitute a termination resistor.
(3) Turn the ignition switch to ON.
(4) Use SSM4 to read DTC detected on CAN system.
Criteria: U0073 is no longer displayed

NO → Repeat Step 4 until U0073 is not detected.

YES

Replace the control module which has been removed when no DTC is output.

DTC U0100 Missing data for engine

Circuit description
Data transmission from ECM has been interrupted.

DTC No.	Detecting conditions
U0100	No data has been received from the engine control computer.

Inspection steps
CAUTION:
Perform all of steps to Step 9 in "How to troubleshoot" before performing this steps. (Refer to NW - 30)

1	Check DTC

(1) Check the displayed DTC.
Criteria: DTCs other than U**** are not output

NO → Perform the diagnosis according to the DTC.

YES

2	DTC check

(1) Check the displayed DTC.

Criteria: U0100 is output

NO → Go to "How to simulate trouble phenomenon" (Refer to IN - 32)

YES

3	Checking CAN communication circuit

(1) Check CAN communication circuit. (Refer to NW - 44)
Criteria: No fault is found.

NO → Follow the repair procedure described in "CAN communication circuit check".

YES

4	DTC check

(1) Use SSM4 to read DTC.
Criteria: U0100 is output

NO → Go to "How to simulate trouble phenomenon" (Refer to IN - 32)

YES

5	DTC check

(1) Use SSM4 to read DTCs of all the systems.
Criteria: U0100 is not detected from more than one module

NO → Replace the ECM.

YES

6	Replacement of the module

(1) Replace the engine control computer.
(2) Use SSM4 to read DTC.
Criteria: U0100 is output

NO → System is normal.

YES

7	Replacement of the module

(1) Reinstall the engine control computer.
(2) Replace the module that DTC has been detected.
(3) Use SSM4 to read DTC.
Criteria: U0100 is output

NO → System is normal.

YES

Replace the ECM.

DTC	U0101	Lost Communication With TCM

Circuit description

Data transmission from the transmission control computer ASSY has been interrupted.

DTC No.	Detecting conditions
U0101	No data has been received from the transmission control computer ASSY.

Inspection steps

CAUTION:

Perform all of steps to Step 9 in "How to troubleshoot" before performing this steps. (Refer to NW - 30)

1	Check DTC

(1) Check the displayed DTC.

Criteria: DTCs other than U**** are not output

NO → Perform the diagnosis according to the DTC.

YES

2	DTC check

(1) Check the displayed DTC.

Criteria: U0101 is output

NO → Go to "How to simulate trouble phenomenon" (Refer to IN - 32)

YES

3	Checking CAN communication circuit

(1) Check CAN communication circuit. (Refer to NW - 44)

Criteria: No fault is found.

NO → Follow the repair procedure described in "CAN communication circuit check".

YES

4	DTC check

(1) Use SSM4 to read DTC.

Criteria: U0101 is output

NO → Go to "How to simulate trouble phenomenon" (Refer to IN - 32)

YES

5	DTC check

(1) Use SSM4 to read DTCs of all the systems.
Criteria: U0101 is not detected from more than one module

NO → Replace the transmission control computer ASSY.

YES

6	Replacement of the module

(1) Replace the transmission control computer ASSY.
(2) Use SSM4 to read DTC.
Criteria: U0101 is output

NO → System is normal.

YES

7	Replacement of the module

(1) Reinstall the transmission control computer ASSY.
(2) Replace the module that DTC has been detected.
(3) Use SSM4 to read DTC.
Criteria: U0101 is output

NO → System is normal.

YES

Replace the transmission control computer ASSY.

DTC U0122 Lost Communication With Vehicle Dynamics Control Module

Circuit description
Data transmission from the brake actuator ASSY has been interrupted.

DTC No.	Detecting conditions
U0122	No data has been received from the brake actuator ASSY.

Inspection steps
CAUTION:
Perform all of steps to Step 9 in "How to troubleshoot" before performing this steps. (Refer to NW - 30)

1	Check DTC

(1) Check the displayed DTC.
Criteria: DTCs other than U**** are not output

NO → Perform the diagnosis according to the DTC.

YES

2	DTC check

(1) Check the displayed DTC.
Criteria: U0122 is output

NO → Go to "How to simulate trouble phenomenon" (Refer to IN - 32)

YES

3	Checking CAN communication circuit

(1) Check CAN communication circuit. (Refer to NW - 44)
Criteria: No fault is found.

NO → Follow the repair procedure described in "CAN communication circuit check".

YES

4	DTC check

(1) Use SSM4 to read DTC.
Criteria: U0122 is output

NO → Go to "How to simulate trouble phenomenon" (Refer to IN - 32)

YES

5	DTC check

(1) Use SSM4 to read DTCs of all the systems.
Criteria: U0122 is not detected from more than one module

NO → Replace the brake actuator ASSY.

YES

6	Replacement of the module

(1) Replace the brake actuator ASSY.
(2) Use SSM4 to read DTC.
Criteria: U0122 is output

NO → System is normal.

YES

7	Replacement of the module

(1) Reinstall the brake actuator ASSY.
(2) Replace the module that DTC has been detected.

(3) Use SSM4 to read DTC.
Criteria: U0122 is output

NO → System is normal.

YES

Replace the brake actuator ASSY.

DTC	U0126	Lost Communication With Steering Angle Sensor Module

Circuit description
Data transmission from the spiral cable SUB-ASSY has been interrupted.

NW

DTC No.	Detecting conditions
U0126	No data has been received from the spiral cable SUB-ASSY.

Inspection steps
CAUTION:
Perform all of steps to Step 9 in "How to troubleshoot" before performing this steps. (Refer to NW - 30)

1	Check DTC

(1) Check the displayed DTC.
Criteria: DTCs other than U**** are not output

NO → Perform the diagnosis according to the DTC.

YES

2	DTC check

(1) Check the displayed DTC.
Criteria: U0126 is output

NO → Go to "How to simulate trouble phenomenon" (Refer to IN - 32)

YES

3	Checking CAN communication circuit

(1) Check CAN communication circuit. (Refer to NW - 44)
Criteria: No fault is found.

NO → Follow the repair procedure described in "CAN communication circuit check".

YES

4	DTC check

(1) Use SSM4 to read DTC.
Criteria: U0126 is output

NO → Go to "How to simulate trouble phenomenon" (Refer to IN - 32)

YES

5	DTC check

(1) Use SSM4 to read DTCs of all the systems.
Criteria: U0126 is not detected from the brake actuator ASSY.

NO → Replace the spiral cable SUB-ASSY.

YES

6	Replacement of the module

(1) Replace the spiral cable SUB-ASSY.
(2) Use SSM4 to read DTC.
Criteria: U0126 is output

NO → System is normal.

YES

7	Replacement of the module

(1) Reinstall the spiral cable SUB-ASSY.
(2) Replace the module that DTC has been detected.
(3) Use SSM4 to read DTC.
Criteria: U0126 is output

NO → System is normal.

YES

Replace the spiral cable SUB-ASSY.

DTC U0131 Missing data for electric power steering

Circuit description
Data transmission from the power steering computer ASSY has been interrupted.

DTC No.	Detecting conditions
U0131	No data has been received from the power steering computer ASSY.

Inspection steps
CAUTION:
Perform all of steps to Step 9 in "How to troubleshoot" before performing this steps. (Refer to NW - 30)

1	Check DTC

(1) Check the displayed DTC.
Criteria: DTCs other than U**** are not output

NO → Perform the diagnosis according to the DTC.

YES

2	DTC check

(1) Check the displayed DTC.
Criteria: U0131 is output

NO → Go to "How to simulate trouble phenomenon" (Refer to IN - 32)

YES

3	Checking CAN communication circuit

(1) Check CAN communication circuit. (Refer to NW - 44)
Criteria: No fault is found.

NO → Follow the repair procedure described in "CAN communication circuit check".

YES

4	DTC check

(1) Use SSM4 to read DTC.
Criteria: U0131 is output

NO → Go to "How to simulate trouble phenomenon" (Refer to IN - 32)

YES

5	DTC check

(1) Use SSM4 to read DTCs of all the systems.
Criteria: U0131 is not detected from the combination meter ASSY.

NO → Replace the power steering computer ASSY.

YES

6	Replacement of the module

(1) Replace the power steering computer ASSY.
(2) Use SSM4 to read DTC.
Criteria: U0131 is output

NO → System is normal.

YES

7	Replacement of the module

(1) Reinstall the power steering computer ASSY.
(2) Replace the module that DTC has been detected.
(3) Use SSM4 to read DTC.
Criteria: U0131 is output

NO → System is normal.

YES →

Replace the power steering computer ASSY.

NW

DTC	U0140	Missing data for body integrated unit

Circuit description
Data communication from the body integrated unit has been interrupted.

DTC No.	Detecting conditions
U0140	No data has been received from the body integrated unit.

Inspection steps
CAUTION:
Perform all of steps to Step 9 in "How to troubleshoot" before performing this steps. (Refer to NW - 30)

1	Check DTC

(1) Check the displayed DTC.
Criteria: DTCs other than U**** are not output

NO → Perform the diagnosis according to the DTC.

YES →

2	DTC check

(1) Check the displayed DTC.
Criteria: U0140 is output

NO → Go to "How to simulate trouble phenomenon" (Refer to IN - 32)

YES →

3	Checking CAN communication circuit

(1) Check CAN communication circuit. (Refer to NW - 44)
Criteria: No fault is found.

NO → Follow the repair procedure described in "CAN communication circuit check".

YES

4	DTC check

(1) Use SSM4 to read DTC.
Criteria: U0140 is output

NO → Go to "How to simulate trouble phenomenon" (Refer to IN - 32)

YES

5	DTC check

NW

(1) Use SSM4 to read DTCs of all the systems.
Criteria: U0140 is not detected from more than one module

NO → Replace the body integrated unit.

YES

6	Replacement of the module

(1) Replace the body integrated unit.
(2) Use SSM4 to read DTC.
Criteria: U0140 is output

NO → System is normal.

YES

7	Replacement of the module

(1) Reinstall the body integrated unit.
(2) Replace the module that DTC has been detected.
(3) Use SSM4 to read DTC.
Criteria: U0140 is output

NO → System is normal.

YES

Replace the body integrated unit.

DTC	U0151	Missing data for air bag

Circuit description
Data communication from the airbag CM has been interrupted.

DTC No.	Detecting conditions
U0151	No data has been received from the airbag CM.

Inspection steps
CAUTION:
Perform all of steps to Step 9 in "How to troubleshoot" before performing this steps. (Refer to NW - 30)

1	Check DTC

(1) Check the displayed DTC.
Criteria: DTCs other than U**** are not output

NO → Perform the diagnosis according to the DTC.

YES

2	DTC check

(1) Check the displayed DTC.
Criteria: U0151 is output

NO → Go to "How to simulate trouble phenomenon" (Refer to IN - 32)

YES

3	Checking CAN communication circuit

(1) Check CAN communication circuit. (Refer to NW - 44)
Criteria: No fault is found.

NO → Follow the repair procedure described in "CAN communication circuit check".

YES

4	DTC check

(1) Use SSM4 to read DTC.
Criteria: U0151 is output

NO → Go to "How to simulate trouble phenomenon" (Refer to IN - 32)

YES

5	DTC check

(1) Use SSM4 to read DTCs of all the systems.
Criteria: U0151 is not detected from the combination meter ASSY.

NO → Replace the airbag CM.

YES

6	Replacement of the module

(1) Replace the airbag CM.

(2) Use SSM4 to read DTC.
Criteria: U0151 is output

NO → System is normal.

YES

7	Replacement of the module

(1) Reinstall the airbag CM.
(2) Replace the module that DTC has been detected.
(3) Use SSM4 to read DTC.
Criteria: U0151 is output

NO → System is normal.

YES

Replace the airbag CM.

DTC	U0155	Lost Communication With Instrument Panel Cluster (IPC) Control Module

Circuit description
Data communication from the combination meter ASSY has been interrupted.

DTC No.	Detecting conditions
U0155	No data has been received from the combination meter ASSY.

Inspection steps
CAUTION:
Perform all of steps to Step 9 in "How to troubleshoot" before performing this steps. (Refer to NW - 30)

1	Check DTC

(1) Check the displayed DTC.
Criteria: DTCs other than U**** are not output

NO → Perform the diagnosis according to the DTC.

YES

2	DTC check

(1) Check the displayed DTC.
Criteria: U0155 is output

NO → Go to "How to simulate trouble phenomenon" (Refer to IN - 32)

YES

3	Checking CAN communication circuit

(1) Check CAN communication circuit. (Refer to NW - 44)
Criteria: No fault is found.

NO → Follow the repair procedure described in "CAN communication circuit check".

YES

4	DTC check

(1) Use SSM4 to read DTC.
Criteria: U0155 is output

NO → Go to "How to simulate trouble phenomenon" (Refer to IN - 32)

YES

5	DTC check

(1) Use SSM4 to read DTCs of all the systems.
Criteria: U0155 is not detected from more than one module

NO → Replace the combination meter ASSY.

YES

6	Replacement of the module

(1) Replace the combination meter ASSY.
(2) Use SSM4 to read DTC.
Criteria: U0155 is output

NO → System is normal.

YES

7	Replacement of the module

(1) Reinstall the combination meter ASSY.
(2) Replace the module that DTC has been detected.
(3) Use SSM4 to read DTC.
Criteria: U0155 is output

NO → System is normal.

YES

Replace the combination meter ASSY.

DTC	U0164	Missing data for air conditioner

Circuit description

Data transmission from A/C control panel has been interrupted.

DTC No.	Detecting conditions
U0164	No data has been received from A/C control panel.

Inspection steps

CAUTION:

Perform all of steps to Step 9 in "How to troubleshoot" before performing this steps. (Refer to NW - 30)

1	Check DTC

(1) Check the displayed DTC.

Criteria: DTCs other than U**** are not output

NO → Perform the diagnosis according to the DTC.

YES

2	DTC check

(1) Check the displayed DTC.

Criteria: U0164 is output

NO → Go to "How to simulate trouble phenomenon" (Refer to IN - 32)

YES

3	Checking CAN communication circuit

(1) Check CAN communication circuit. (Refer to NW - 44)

Criteria: No fault is found.

NO → Follow the repair procedure described in "CAN communication circuit check".

YES

4	DTC check

(1) Use SSM4 to read DTC.

Criteria: U0164 is output

NO → Go to "How to simulate trouble phenomenon" (Refer to IN - 32)

YES

5	DTC check

(1) Use SSM4 to read DTCs of all the systems.

Criteria: U0164 is not detected from the main body ECM.

NO → Replace A/C control panel.

YES

6	Replacement of the module

(1) Replace A/C control panel.
(2) Use SSM4 to read DTC.
Criteria: U0164 is output

NO → System is normal.

YES

7	Replacement of the module

(1) Restore A/C control panel.
(2) Replace the module that DTC has been detected.
(3) Use SSM4 to read DTC.
Criteria: U0164 is output

NO → System is normal.

YES

Replace A/C control panel.

DTC	U0327	Missing data for smart key computer ASSY

Circuit description
Data transmission from the collation ECM (Smart key computer ASSY) has been interrupted.

DTC No.	Detecting conditions
U0327	No data has been received from the collation ECM (Smart key computer ASSY).

Inspection steps
CAUTION:
Perform all of steps to Step 9 in "How to troubleshoot" before performing this steps. (Refer to NW - 30)

1	Check DTC

(1) Check the displayed DTC.
Criteria: DTCs other than U**** are not output

NO → Perform the diagnosis according to the DTC.

YES

2	DTC check

(1) Check the displayed DTC.
Criteria: U0327 is output

NO → Go to "How to simulate trouble phenomenon" (Refer to IN - 32)

YES

3	Checking CAN communication circuit

(1) Check CAN communication circuit. (Refer to NW - 44)
Criteria: No fault is found.

NO → Follow the repair procedure described in "CAN communication circuit check".

YES

4	DTC check

(1) Use SSM4 to read DTC.
Criteria: U0327 is output

NO → Go to "How to simulate trouble phenomenon" (Refer to IN - 32)

YES

5	DTC check

(1) Use SSM4 to read DTCs of all the systems.
Criteria: U0327 is not detected from the main body ECM.

NO → Replace the collation ECM (Smart key computer ASSY).

YES

6	Replacement of the module

(1) Replace the collation ECM (Smart key computer ASSY).
NOTE:
Do not register the collation ECM (Smart key computer ASSY).
(2) Use SSM4 to read DTC.
Criteria: U0327 is output

NO → System is normal. (Register the collation ECM (Smart key computer ASSY).

YES

7	Replacement of the module

(1) Reinstall the collation ECM (Smart key computer ASSY).
(2) Replace the module that DTC has been detected.
(3) Use SSM4 to read DTC.
Criteria: U0327 is output

NO → System is normal.

YES

Replace the collation ECM (Smart key computer ASSY).

DTC	U0401	Data error from engine

Circuit description

An error has been detected in the data from ECM.

DTC No.	Detecting conditions
U0401	Invalid data has been received from the engine control computer.

NW

Inspection steps

CAUTION:

Perform all of steps to Step 9 in "How to troubleshoot" before performing this steps. (Refer to NW - 30)

1	Check DTC

(1) Check the displayed DTC.
Criteria: DTCs other than U**** are not output

NO → Perform the diagnosis according to the DTC.

YES

2	DTC check

(1) Check the displayed DTC.
Criteria: No DTC indicating bus off or missing data is output

NO → Perform the diagnosis according to the DTC.

YES

3	DTC check

(1) Check the displayed DTC.
Criteria: U0401 is output

NO → Go to "How to simulate trouble phenomenon" (Refer to IN - 32)

YES

4	DTC check

(1) Turn the ignition switch to OFF.
(2) Disconnect the engine control computer connector.
(3) Reconnect the disconnected connector and turn the ignition switch ON.
(4) Use SSM4 to read DTC.
Criteria: U0401 is output

NO → Go to "How to simulate trouble phenomenon" (Refer to IN - 32)

YES

5	DTC check

(1) Use SSM4 to read DTCs of all the systems.
Criteria: U0401 is not detected from more than one module

NO → Replace the engine control computer.

YES

6	Replacement of the module

(1) Replace the engine control computer.
(2) Use SSM4 to read DTC.
Criteria: U0401 is output

NO → System is normal.

YES

7	Replacement of the module

(1) Reinstall the ECM.
(2) Replace the module that DTC has been detected.
(3) Use SSM4 to read DTC.
Criteria: U0401 is output

NO → System is normal.

YES

Replace the ECM.

DTC	U0402	Data error from transmission

Circuit description
An error has been detected in the data from the transmission control computer ASSY.

DTC No.	Detecting conditions
U0402	Invalid data has been received from the transmission control computer ASSY.

Inspection steps
CAUTION:
Perform all of steps to Step 9 in "How to troubleshoot" before performing this steps. (Refer to NW - 30)

1	Check DTC

(1) Check the displayed DTC.
Criteria: DTCs other than U**** are not output

NO → Perform the diagnosis according to the DTC.

YES

2	DTC check

(1) Check the displayed DTC.
Criteria: No DTC indicating bus off or missing data is output

NO → Perform the diagnosis according to the DTC.

YES

3	DTC check

(1) Check the displayed DTC.
Criteria: U0402 is output

NO → Go to "How to simulate trouble phenomenon" (Refer to IN - 32)

YES

4	DTC check

(1) Turn the ignition switch to OFF.
(2) Disconnect the transmission control computer ASSY connector.
(3) Reconnect the disconnected connector and turn the ignition switch ON.
(4) Use SSM4 to read DTC.
Criteria: U0402 is output

NO → Go to "How to simulate trouble phenomenon" (Refer to IN - 32)

YES

5	DTC check

(1) Use SSM4 to read DTCs of all the systems.
Criteria: U0402 is not detected from more than one module

NO → Replace the transmission control computer ASSY.

YES

6	Replacement of the module

(1) Replace the transmission control computer ASSY.
(2) Use SSM4 to read DTC.
Criteria: U0402 is output

NO → System is normal.

YES

7	Replacement of the module

(1) Reinstall the transmission control computer ASSY.
(2) Replace the module that DTC has been detected.
(3) Use SSM4 to read DTC.
Criteria: U0402 is output

NO → System is normal.

YES

Replace the transmission control computer ASSY.

NW

DTC	U0416	Data error from VDC

Circuit description
An error has been detected in the data from the brake actuator ASSY.

DTC No.	Detecting conditions
U0416	Invalid data has been received from the brake actuator ASSY.

Inspection steps
CAUTION:
Perform all of steps to Step 9 in "How to troubleshoot" before performing this steps. (Refer to NW - 30)

1	Check DTC

(1) Check the displayed DTC.
Criteria: DTCs other than U**** are not output

NO → Perform the diagnosis according to the DTC.

YES

2	DTC check

(1) Check the displayed DTC.
Criteria: No DTC indicating bus off or missing data is output

NO → Perform the diagnosis according to the DTC.

YES

3	DTC check

(1) Check the displayed DTC.
Criteria: U0416 is output

NO → Go to "How to simulate trouble phenomenon" (Refer to IN - 32)

YES

4	DTC check

(1) Turn the ignition switch to OFF.
(2) Disconnect the brake actuator ASSY connector.
(3) Reconnect the disconnected connector and turn the ignition switch ON.
(4) Use SSM4 to read DTC.
Criteria: U0416 is output

NO → Go to "How to simulate trouble phenomenon" (Refer to IN - 32)

YES

5	DTC check

(1) Use SSM4 to read DTCs of all the systems.
Criteria: U0416 is not detected from more than one module

NO → Replace the brake actuator ASSY.

YES

6	Replacement of the module

(1) Replace the brake actuator ASSY.
(2) Use SSM4 to read DTC.
Criteria: U0416 is output

NO → System is normal.

YES

7	Replacement of the module

(1) Reinstall the brake actuator ASSY.
(2) Replace the module that DTC has been detected.
(3) Use SSM4 to read DTC.
Criteria: U0416 is output

NO → System is normal.

YES

Replace the brake actuator ASSY.

DTC	U0422	Data error from body integrated unit

Circuit description
An error has been detected in the data from the body integrated unit.

DTC No.	Detecting conditions
U0422	Invalid data has been received from the body integrated unit.

Inspection steps
CAUTION:
Perform all of steps to Step 9 in "How to troubleshoot" before performing this steps. (Refer to NW - 30)

1	Check DTC

(1) Check the displayed DTC.
Criteria: DTCs other than U**** are not output

NO > Perform the diagnosis according to the DTC.

YES

2	DTC check

(1) Check the displayed DTC.
Criteria: No DTC indicating bus off or missing data is output

NO > Perform the diagnosis according to the DTC.

YES

3	DTC check

(1) Check the displayed DTC.
Criteria: U0422 is output

NO > Go to "How to simulate trouble phenomenon" (Refer to IN - 32)

YES

4	DTC check

(1) Turn the ignition switch to OFF.
(2) Disconnect the body integrated unit connector.
(3) Reconnect the disconnected connector and turn the ignition switch ON.
(4) Use SSM4 to read DTC.
Criteria: U0422 is output

NO > Go to "How to simulate trouble phenomenon" (Refer to IN - 32)

YES

5	DTC check

(1) Use SSM4 to read DTCs of all the systems.
Criteria: U0422 is not detected from more than one module

NO > Replace the body integrated unit.

YES

6	Replacement of the module

(1) Replace the body integrated unit.
(2) Use SSM4 to read DTC.
Criteria: U0422 is output

NO → System is normal.

YES

7	Replacement of the module

(1) Reinstall the body integrated unit.
(2) Replace the module that DTC has been detected.
(3) Use SSM4 to read DTC.
Criteria: U0422 is output

NO → System is normal.

YES

Replace the body integrated unit.

DTC	U0423	Data error from meter

Circuit description
An error has been detected in the data from the combination meter ASSY.

DTC No.	Detecting conditions
U0423	Invalid data has been received from the combination meter ASSY.

Inspection steps
CAUTION:
Perform all of steps to Step 9 in "How to troubleshoot" before performing this steps. (Refer to NW - 30)

1	Check DTC

(1) Check the displayed DTC.
Criteria: DTCs other than U**** are not output

NO → Perform the diagnosis according to the DTC.

YES

2	DTC check

(1) Check the displayed DTC.
Criteria: No DTC indicating bus off or missing data is output

NO → Perform the diagnosis according to the DTC.

YES

3	DTC check

(1) Check the displayed DTC.
Criteria: U0423 is output

NO → Go to "How to simulate trouble phenomenon" (Refer to IN - 32)

YES

4	DTC check

(1) Turn the ignition switch to OFF.
(2) Disconnect the combination meter ASSY connector.
(3) Reconnect the disconnected connector and turn the ignition switch ON.
(4) Use SSM4 to read DTC.
Criteria: U0423 is output

NO → Go to "How to simulate trouble phenomenon" (Refer to IN - 32)

YES

5	DTC check

(1) Use SSM4 to read DTCs of all the systems.
Criteria: U0423 is not detected from more than one module

NO → Replace the combination meter ASSY.

YES

6	Replacement of the module

(1) Replace the combination meter ASSY.
(2) Use SSM4 to read DTC.
Criteria: U0423 is output

NO → System is normal.

YES

7	Replacement of the module

(1) Reinstall the combination meter ASSY.
(2) Replace the module that DTC has been detected.
(3) Use SSM4 to read DTC.
Criteria: U0423 is output

NO → System is normal.

YES

Replace the combination meter ASSY.

DTC	U0424	Data error from air conditioner

Circuit description

An error has been detected in the data from the air conditioner amplifier ASSY.

DTC No.	Detecting conditions
U0424	Invalid data has been received from the air conditioner amplifier ASSY.

Inspection steps

CAUTION:

Perform all of steps to Step 9 in "How to troubleshoot" before performing this steps. (Refer to NW - 30)

1	Check DTC

(1) Check the displayed DTC.

Criteria: DTCs other than U**** are not output

NO → Perform the diagnosis according to the DTC.

YES

2	DTC check

(1) Check the displayed DTC.

Criteria: No DTC indicating bus off or missing data is output

NO → Perform the diagnosis according to the DTC.

YES

3	DTC check

(1) Check the displayed DTC.

Criteria: U0424 is output

NO → Go to "How to simulate trouble phenomenon" (Refer to IN - 32)

YES

4	DTC check

(1) Turn the ignition switch to OFF.

(2) Disconnect the air conditioner amplifier ASSY connector.

(3) Reconnect the disconnected connector and turn the ignition switch ON.

(4) Use SSM4 to read DTC.

Criteria: U0424 is output

NO → Go to "How to simulate trouble phenomenon" (Refer to IN - 32)

YES

5	DTC check

(1) Use SSM4 to read DTCs of all the systems.
Criteria: U0424 is not detected from the main body ECM.

NO → Replace the air conditioner amplifier ASSY.

YES

6	Replacement of the module

(1) Replace the air conditioner amplifier ASSY.
(2) Use SSM4 to read DTC.
Criteria: U0424 is output

NO → System is normal.

YES

7	Replacement of the module

(1) Reinstall the air conditioner amplifier ASSY.
(2) Replace the module that DTC has been detected.
(3) Use SSM4 to read DTC.
Criteria: U0424 is output

NO → System is normal.

YES

Replace the air conditioner amplifier ASSY.

General diagnostic table

1. Inspection

Item	Operation	Status		Note
		YES	NO	
Speedometer	Displayed vehicle speed is faster or slower than the actual speed.	Data from the brake actuator ASSY may have been lost.	System is normal.	Also, check vehicle speed pulse circuit.
Fuel gauge	Fuel is present, but the fuel level is lower than the actual level.	Communication error may have occurred.	System is normal.	Also, check the fuel gauge.
Fuel level warning light	Fuel is present, but the light illuminates.	Communication error may have occurred.	System is normal.	Also, check the fuel gauge.
Engine coolant temperature light	Engine coolant temperature light blinks in red and blue alternately.	Communication error may have occurred.	System is normal.	Check the engine coolant light system.
VDC indicator	Illuminating.	Communication error may have occurred.	System is normal.	Check if VDC is not operating.
VDC OFF indicator	Illuminating.	Communication error may have occurred.	System is normal.	Check that VDC is not OFF.

Item	Operation	Status		Note
		YES	NO	
Brake warning light	Illuminating.	Brake fluid may be low or communication error may have occurred.	System is normal.	Check the brake system.
Shift position	Not displayed.	Communication error may have occurred.	System is normal.	Also, check AT system.
AT temperature light	Blinking.	Communication error may have occurred.	System is normal.	Also, check AT system.
Door indicator	Does not go on, or does not go off with the doors closed.	Communication error may have occurred.	System is normal.	Also, check the door switch.
Clearance indicator	Not illuminating.	Communication error may have occurred.	System is normal.	Also, check the combination switch.
High beam indicator	Not illuminating.	Communication error may have occurred.	System is normal.	Also, check the combination switch.
Front fog indicator	Not illuminating.	Communication error may have occurred.	System is normal.	Also, check the combination switch.
Illumination	Illuminating at the maximum brightness.	Communication error may have occurred.	System is normal.	Also, check the illumination switch.

NW

Door lock

Power door lock control system

PARTS LOCATION DL-3
System diagram DL-5
Description of functions DL-7
How to proceed with troubleshooting DL-7
Operation check DL-8
Symptom table DL-9
ECM TERMINAL ARRANGEMENT DL-11
Data monitor / active test DL-12
All door lock / unlock function does not operate with door control switches or door key cylinders DL-13

Wireless door lock control system (with entry & start system)

Precautions DL-20
Parts location DL-21
System diagram DL-23
Description of functions DL-25
How to troubleshoot DL-27
Operation check DL-28
Customize function DL-29
Symptom table DL-30
ECM terminal arrangement DL-31
Checking / clearing diagnostic codes DL-34
Data monitor / active test DL-35
List of diagnostic codes DL-36
B1242 . . . . . DL-36
Answer-back function does not work (hazard + buzzer) DL-38

Wireless door lock control system (without entry & start system)

PARTS LOCATION DL-43
System diagram DL-45
Description of functions DL-47
How to troubleshoot DL-49
Operation check DL-50
Customize function DL-51
Symptom table DL-52
ECM terminal arrangement DL-54
Checking / clearing diagnostic codes DL-57
Data monitor / active test DL-57
List of diagnostic codes DL-58
B1242 . . . . . DL-58
B1242 . . . . . DL-61
Only wireless function does not work (without TPMS) DL-63
Only wireless function does not work (with TPMS) DL-70
Answer-back function does not work DL-78

Key warning system

PARTS LOCATION DL-82
System diagram DL-84
Description of functions DL-85

How to troubleshoot. DL-85
Operation check DL-86
Customize function DL-86
Symptom table. DL-86
ECM terminal arrangement DL-87
Data monitor / active test. DL-88
Key reminder buzzer does not sound DL-89

Transmitter battery (with smart entry)
Replacement DL-92

Transmitter battery (without smart entry)
Replacement DL-94

Door control transmitter (without smart entry)
Exploded view DL-95
Removal DL-96
Installation DL-96
Registration settings DL-97

Unlock warning switch ASSY
Exploded view DL-98
Removal DL-98
Installation DL-98
Unit inspection DL-99

Front door lock ASSY
Exploded view DL-100
Removal DL-101
Installation DL-102
Unit inspection DL-102

Trunk panel lock ASSY
Exploded view DL-105
Removal DL-105
Installation DL-107
Unit inspection DL-108

Door control receiver
Exploded view DL-109
Removal DL-111
Installation DL-112

Wireless door lock buzzer
Exploded view DL-114
Removal DL-114
Installation DL-115

Power door lock control system

PARTS LOCATION

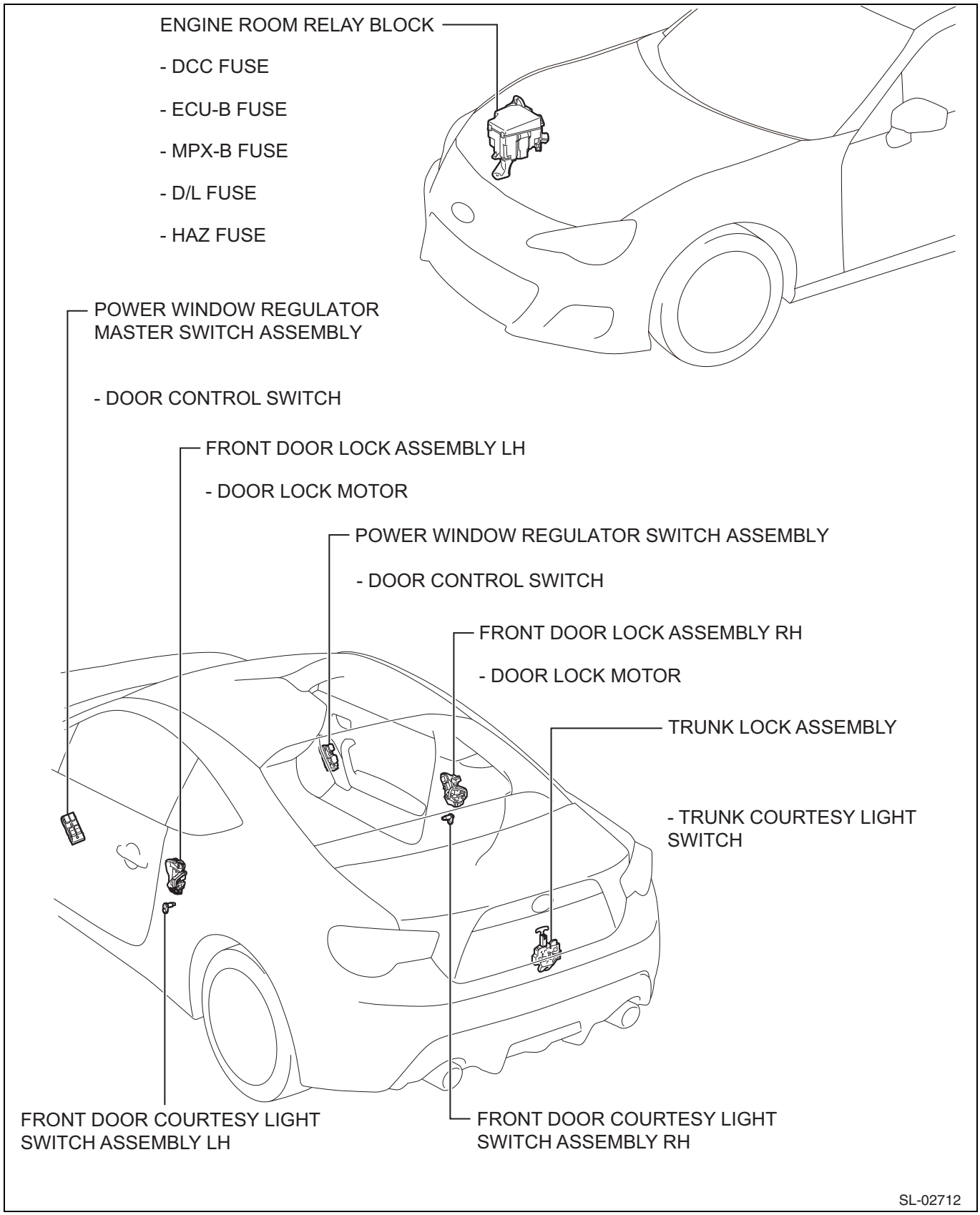

DL

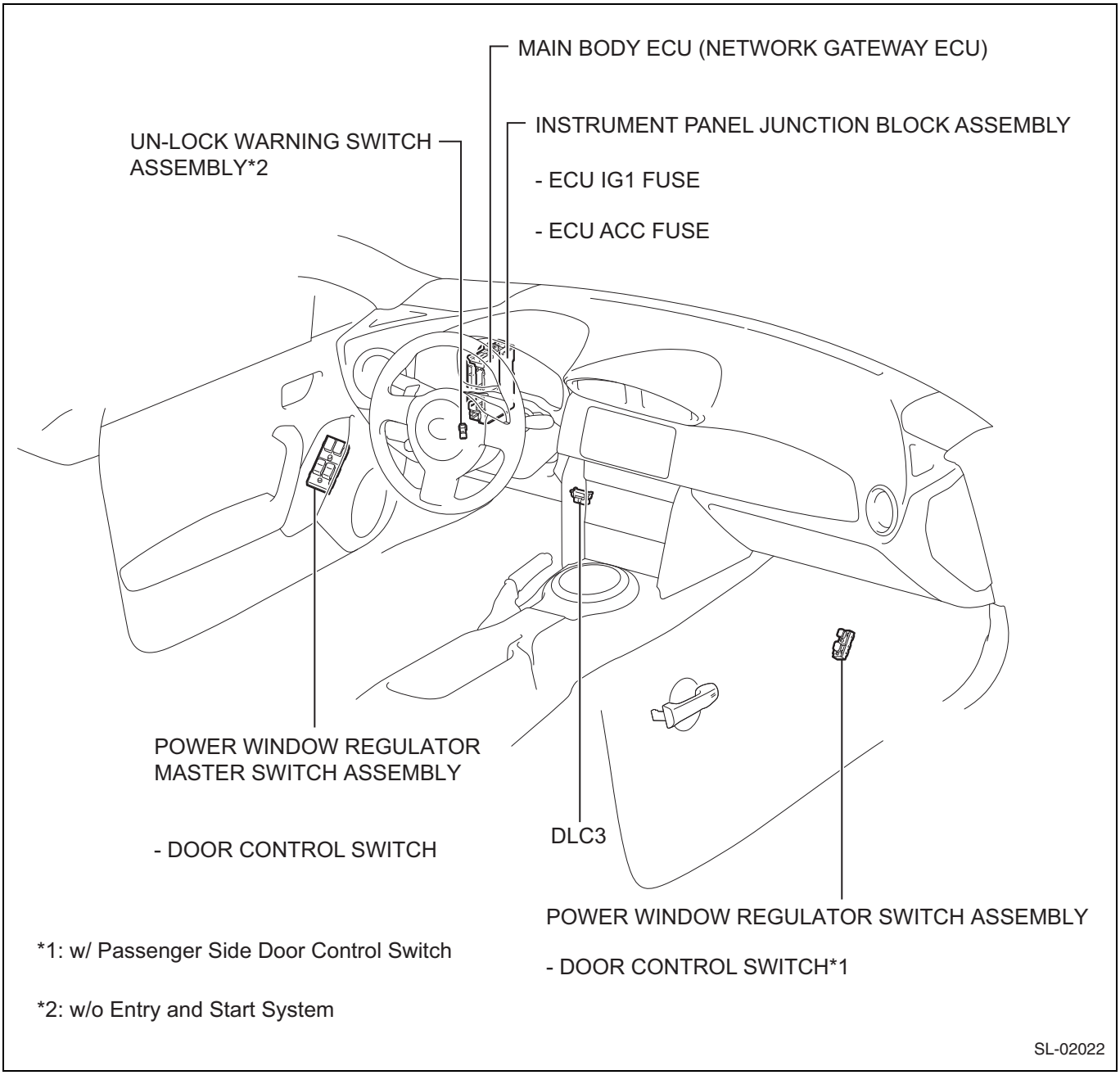
MAIN BODY ECU (NETWORK GATEWAY ECU)
INSTRUMENT PANEL JUNCTION BLOCK ASSEMBLY
- ECU IG1 FUSE
- ECU ACC FUSE
UN-LOCK WARNING SWITCH ASSEMBLY*2
POWER WINDOW REGULATOR MASTER SWITCH ASSEMBLY
- DOOR CONTROL SWITCH
DLC3
POWER WINDOW REGULATOR SWITCH ASSEMBLY
- DOOR CONTROL SWITCH*1
*1: w/ Passenger Side Door Control Switch
*2: w/o Entry and Start System
SL-02022

DL

SYSTEM DIAGRAM

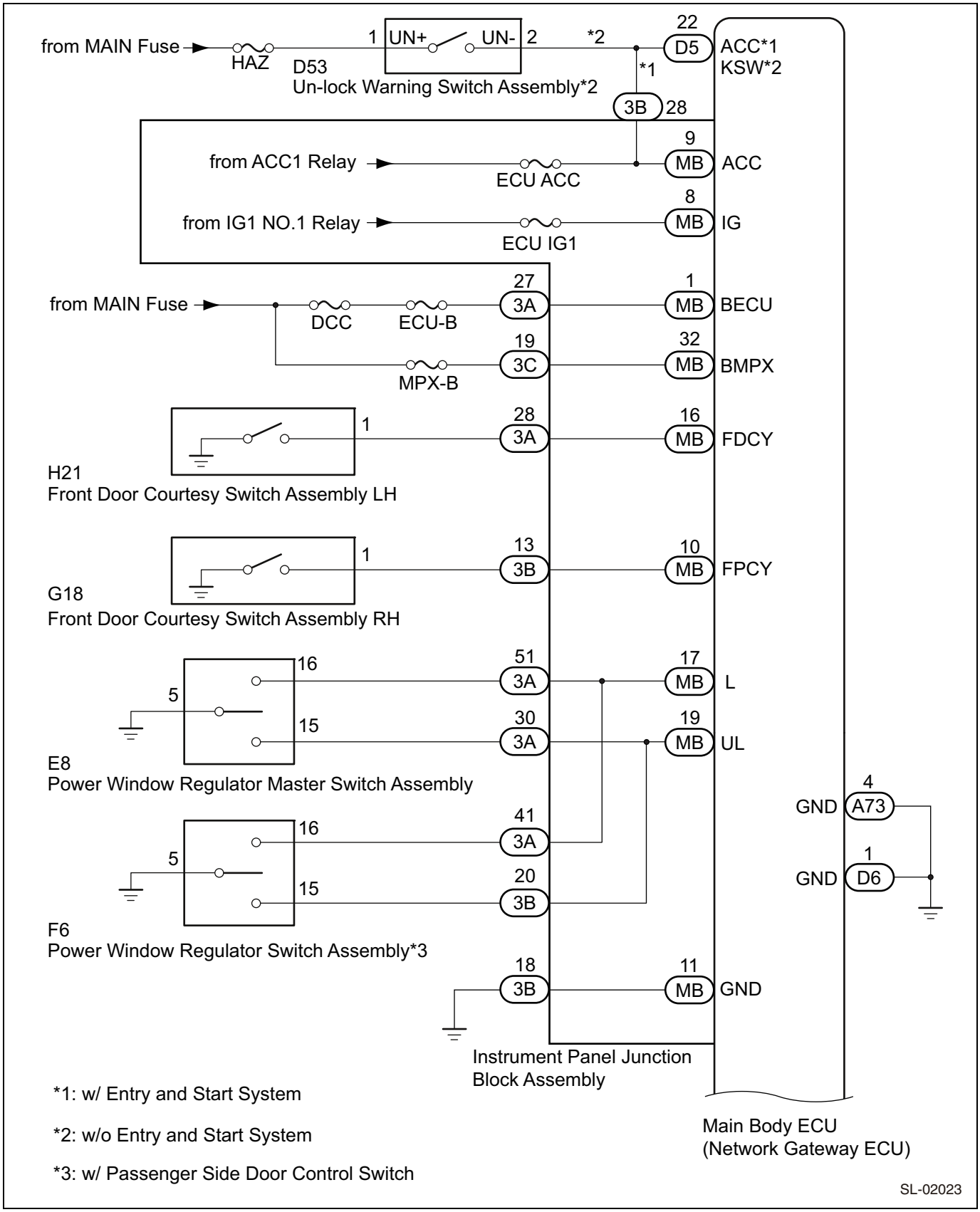

DL

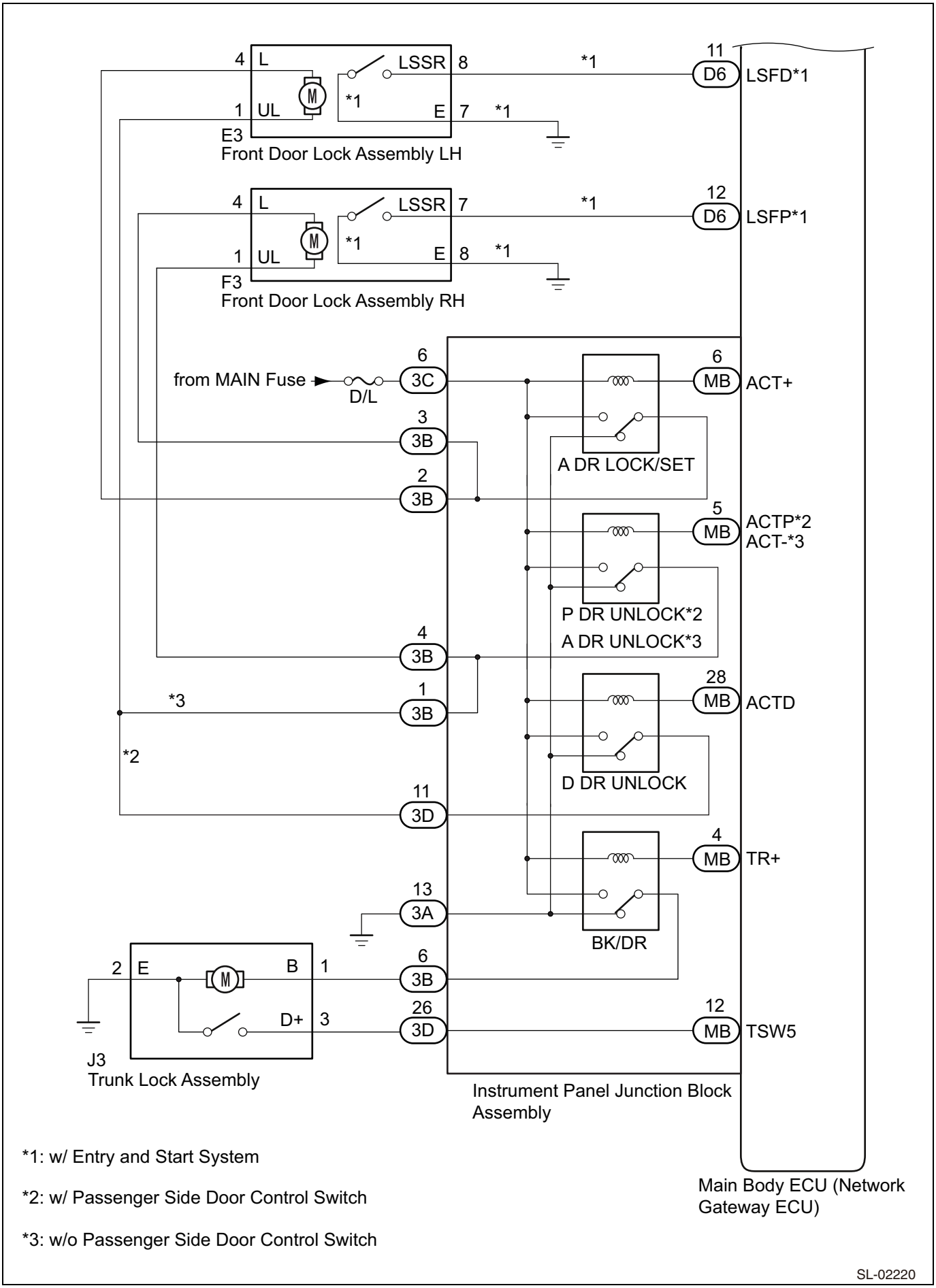

*1: w/ Entry and Start System

*2: w/ Passenger Side Door Control Switch

*3: w/o Passenger Side Door Control Switch

SL-02220

Description of functions

1. Description of power door lock control system
   (1) The power door lock control system locks and unlocks all doors. The main body ECM (multiplex network body computer) detects lock and unlock signals from the door control switches. Then, the main body ECM (multiplex network body computer) sends a lock or unlock signal to each door lock motor in response to the input.
2. Functions of the main parts

Components	Function
Power window regulator master switch ASSY • Door control switch	The door control switch in the master switch locks and unlocks all doors.
Power window regulator switch ASSY • Door control switch *1	The passenger's door control switch locks and unlocks all doors.
Door courtesy light ASSY	• It is provided for each door. • It detects the door state (open, close) and outputs the data to the main body ECM (multiplex network body computer). • It illuminates while the door is open and turns off while the door is closed.
Front door lock ASSY LH	• An integrated motor locks and unlocks the door. • The integrated key lock/unlock switch (linked by key) detects the key operation state and outputs the signal to the main body ECM (multiplex network body computer). • The integrated unlock detection switch (locked or unlocked) detects the door state and outputs the signal to the main body ECM (multiplex network body computer). This switch turns OFF when the door is locked or turns ON when the door is unlocked.
Front door lock ASSY RH	• An integrated motor locks and unlocks the door. • The integrated unlock detection switch (locked or unlocked) detects the door state and outputs the signal to the main body ECM (multiplex network body computer). This switch turns OFF when the door is locked or turns ON when the door is unlocked. *2
Trunk lock ASSY	• An integrated motor releases the door latch. • The integrated courtesy switch (open or closed) detects the trunk state and outputs the signal to the main body ECM (multiplex network body computer). • This switch turns ON when the trunk is open and turns OFF when it is closed.

*1: With passenger's door control switch
*2: For vehicles with entry & start system

3. System functions
   (1) This system is controlled by the main body ECM (multiplex network body computer). The main body ECM (multiplex network body computer) outputs signals to the door lock motors. The power door lock control system provides the following functions.

Function	Procedures
Manual lock & unlock function	This function allows the user to lock and unlock all doors by activating the door control switches.
Key link lock&unlock function *1	This function is linked with the mechanical key cylinders and locks or unlocks all doors when a lock or unlock operation is performed.
Lockout prevention function	If a key remains in the vehicle *2 or it is left inserted in the ignition key cylinder *3, the doors are not locked even when a door lock operation is performed.
Manual unlock prevention function	Under the following conditions, any door unlock operation with a door control switch is prevented. • The doors are locked by key link operation *1, wireless key operation *3, or entry operation while all doors are closed.
Key link 2 step unlock function *1, *4	Turning the key cylinder once unlocks the driver's door only. Turning it twice unlocks all the doors.

*1: With key link switch
*2: For vehicles with entry & start system
*3: Without entry & start system
*4: Because this function is set to OFF in the vehicle initial state, it should be set by the customize function.

HOW TO PROCEED WITH TROUBLESHOOTING

NOTE:

- Use the following procedures to troubleshoot the power door lock control system.
- *: Use the SSM4.

1	VEHICLE BROUGHT TO WORKSHOP

NEXT

2	INSPECT BATTERY VOLTAGE

Standard voltage: 11 to 14 V

If the voltage is below 11 V, recharge or replace the battery before proceeding.

NEXT

3	PROBLEM SYMPTOMS TABLE

(1) Refer to Problem Symptoms Table (See page DL - 9).

Result

Result	Proceed to
Fault is not listed in Problem Symptoms Table	A
Fault is listed in Problem Symptoms Table	B

B → Go to step 5

A

4	OVERALL ANALYSIS AND TROUBLESHOOTING*

(1) ECM terminal arrangement (See page DL - 11).
(2) Operation check (See page DL - 8).
(3) Data monitor/Active Test (See page DL - 12).

NEXT

5	ADJUST, REPAIR OR REPLACE

NEXT

6	CONFIRMATION TEST

NEXT

END

Operation check

1. Check the power door lock operation.
   CAUTION:
   The following operation check is based on the vehicle initial state that is not customized yet.
   (1) Inspect the basic functions.
      (a)Check that all doors are locked when the lock side of the door control switch is pressed.

(b)Check that all doors are unlocked when the unlock side of the door control switch is pressed.
(c)Check that all doors are locked when the driver's door key cylinder is turned to the lock side using a key.
(d)Check that all doors are unlocked when the driver's door key cylinder is turned to the unlock side using a key.

(2) Checking lockout prevention function (with entry & start system)
CAUTION:
To prevent the electronic key from being left inside the vehicle inadvertently, perform the following checks with the driver side window opened.
(a)Place an electronic key inside the vehicle.
(b)With the driver's door opened, set the driver's door lock knob or door control switch to the lock state and close the driver's door. Check that all doors are unlocked.

(3) Checking lockout prevention function (without entry & start system)
CAUTION:
To prevent the key from being left inside the vehicle inadvertently, perform the following checks with the driver side window opened.
(a)Turn the ignition switch to ON or ACC.
(b)Check that all doors are unlocked immediately when door control switch (for manual operation) is operated to the lock side with the driver's door opened.

(4) Checking security function of door lock control system
(a)Open the driver's door window before closing all doors so that the door control switches can be operated even from outside. (Step 1)
(b)Starting from the step 1, lock the driver's door using a key from outside. Next, check that the doors are not unlocked when the unlock side of the door control switch (for manual operation) is operated from outside.
(c)(With double locking system) Starting from the step 1, lock the drivers door by wireless key operation or entry lock operation *1 from outside. Next, check that the doors are not unlocked when the unlock side of the door control switch (for manual operation) is operated from outside.
*1: For vehicles with entry & start system
NOTE:
Check that the security function of the door lock control system is cancelled under the following conditions.
- Turn the ignition switch to ON.
- The driver's door is unlocked using an actual key.
- After the door lock knob is unlocked manually, the unlock side of the door control switch (for manual operation) is pressed.
- The door is unlocked by wireless operation.
- The door is unlocked by entry operation.

DL

Symptom table

NOTE:
- Use the following table to identify the cause of the symptom. If multiple areas are listed as the causes, they are indicated in the [Faulty part] column according to the order of probability of causing the symptom. Check the possible causal areas in the list order and confirm each symptom. Replace faulty parts as necessary.
- Before inspecting the areas listed in "Possible cause" below, check the fuses and the relays related to this system.

Power door lock control system

Symptoms	Faulty part	Reference pages
All door lock/unlock function does not operate	Main body ECM (multiplex network body ECM)	-
	Instrument panel junction block ASSY	-
All door lock/unlock function does not operate with master switch or door key cylinders	Power window regulator master switch ASSY	DL - 13
	Wiring harness or connector	-
	Main body ECM (multiplex network body ECM)	-
	Instrument panel junction block ASSY	-
Only all door lock/unlock function does not operate	Front door lock ASSY (for driver's door)	-
	Wiring harness or connector	-
	Main body ECM (multiplex network body ECM)	-
	Instrument panel junction block ASSY	-

Symptoms	Faulty part	Reference pages
Only passenger's door lock/unlock function does not operate	Front door lock ASSY (for front passenger's door)	-
	Wiring harness or connector	-
	Main body ECM (multiplex network body ECM)	-
	Instrument panel junction block ASSY	-
Unlock operation continues after door is unlocked*1	Front door lock ASSY (for driver's door)	-
	Front door lock ASSY (for front passenger's door)	-
	Wiring harness or connector	-
	Main body ECM (multiplex network body ECM)	-
	Instrument panel junction block ASSY	-

NOTE:
*1: When the door unlock detection switch detects the lock position signal immediately after the door unlock operation, the door unlock operation is performed three times.

ECM terminal arrangement

1. CHECK INSTRUMENT PANEL JUNCTION BLOCK ASSEMBLY AND MAIN BODY ECU (MULTIPLEX NETWORK BODY ECU)

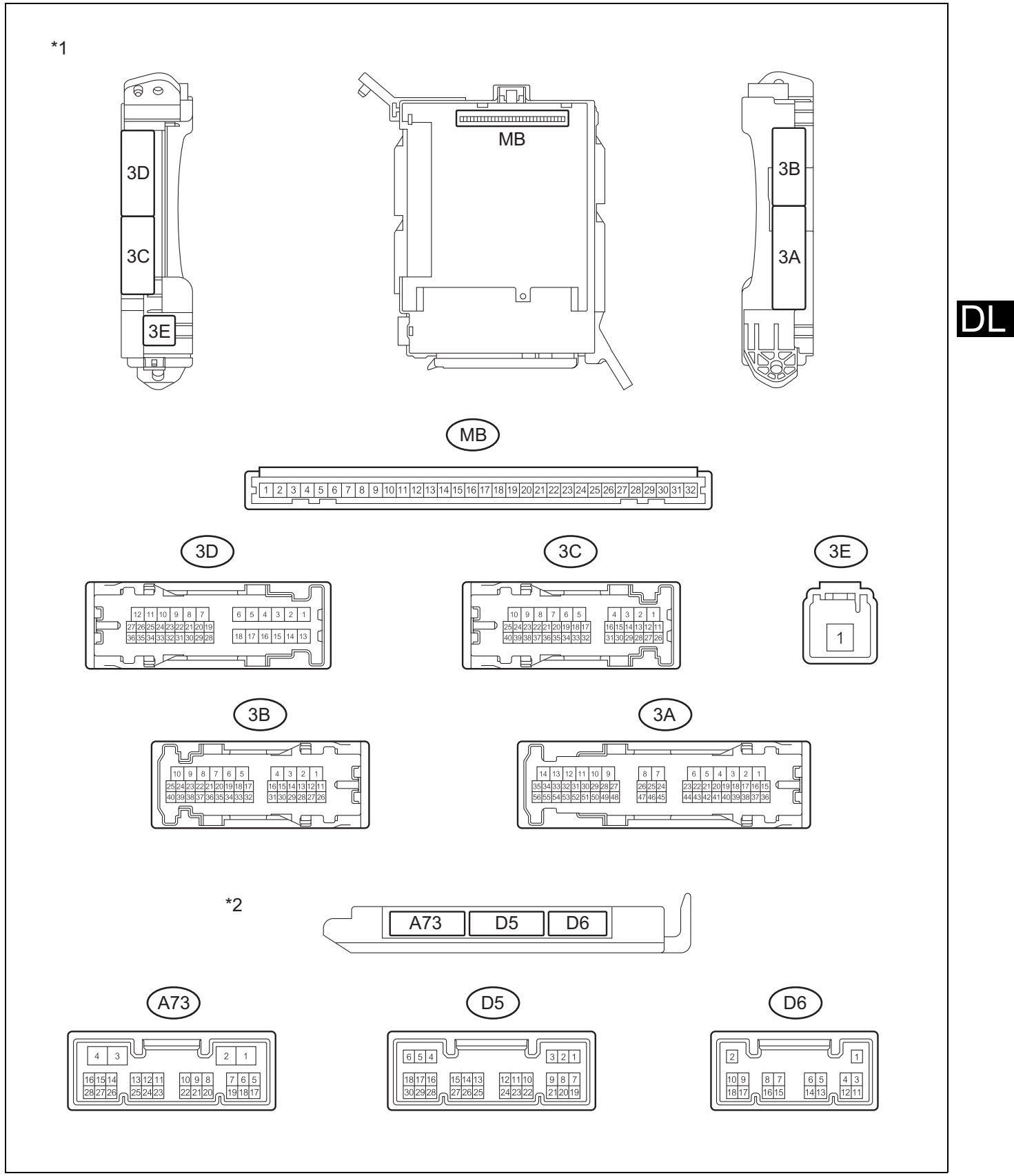

Text in Illustration

*1	Instrument Panel Junction Block Assembly	*2	Main Body ECU (Multiplex Network Body ECU)

(1) Remove the main body ECU (multiplex network body ECU) from the instrument panel junction block assembly.
(2) Disconnect the D5, D6 and A73 main body ECU (multiplex network body ECU) connectors.
(3) Measure the resistance and voltage between each terminal of the wire harness side connectors and body ground.

Terminal No.	Terminal Description	Condition	Specified Condition
MB-1 - Body ground	Battery power supply	Always	11 to 14 V
MB-8 - Body ground	Ignition switch power supply	Ignition switch ON	11 to 14 V
		Ignition switch off	Below 1 V
MB-9 - Body ground	ACC power supply	Ignition switch ACC	11 to 14 V
		Ignition switch off	Below 1 V
MB-11 - Body ground	Ground	Always	Below 1 Ω
MB-32 - Body ground	Battery power supply	Always	11 to 14 V
D5-22 - Body ground	Unlock warning switch input	No key in ignition key cylinder (off)	Below 1 V
		Key inserted ignition key cylinder (on)	11 to 14 V
D6-1 - Body ground	Ground	Always	Below 1 Ω
A73-4 - Body ground	Ground	Always	Below 1 Ω

DL

(4) Reconnect the D5, D6 and A73 main body ECU (multiplex network body ECU) connectors.
(5) Install the main body ECU (multiplex network body ECU) to the instrument panel junction block assembly.
(6) Measure the voltage and resistance, check for pulse according to the valve(s) in the table below.

Terminal No.	Terminal Description	Condition	Specified Condition
3A-28 - Body ground	Driver side door courtesy light switch input	Driver side door open	Below 1 V
		Driver side door closed	Pulse generation
3B-13 - Body ground	Passenger side door courtesy light switch input	Passenger side door open	Below 1 V
		Passenger side door closed	Pulse generation
3B-2 - Body ground	Door lock motor lock drive output (for driver side)	Door control switch not pushed	Below 1 V
		Lock side of door control switch pushed	11 to 14 V
3B-3 - Body ground	Door lock motor lock drive output (for passenger side)	Door control switch not pushed	Below 1 V
		Lock side of door control switch pushed	11 to 14 V
3B-1 - Body ground	Door lock motor unlock drive output (for driver side)	Door control switch not pushed	Below 1 V
		Lock side of door control switch pushed	11 to 14 V
3B-4 - Body ground	Door lock motor unlock drive output (for passenger side)	Door control switch not pushed	Below 1 V
		Lock side of door control switch pushed	11 to 14 V
3D-26 - Body ground	Luggage compartment door courtesy light switch input	Door control switch not pushed	Below 1 V
		Lock side of door control switch pushed	11 to 14 V

Data monitor / active test

1. Data monitor

CAUTION:
The values indicated for the normal conditions are informative values. Do not depend on reference value only when judging if the part is faulty.
NOTE:
By using the SSM4 and reading the data monitor, you can read the statuses and values for switches, sensors, actuators, and other items without removing parts. This inspection is very useful because it allows an operator to read any intermittent conditions or signals without disturbing parts or wiring. Diagnostic time can be saved by reading the data monitor information at the initial stage of the troubleshooting.

(1) Connect the SSM4 to the DLC3.
(2) Turn the ignition switch to ON.
(3) Turn on the SSM4.
(4) Input the following menus: [Body Control] →[Data monitor]
(5) Based on the contents of the SSM4 display, read the [Data monitor].

Main body

Item Name	Description/display range	Normal value	Remarks
[D Door Courtesy]	Driver's door courtesy light switch signal / ON or OFF	ON: Driver's door is open. OFF: Driver's door is closed	-
[Door Lock SW-Lock]	Door control switch (power window regulator master switch ASSY or power window regulator switch ASSY *1) lock signal / OFF or ON	OFF: Lock side of door control switch (power window regulator master switch ASSY or power window regulator switch ASSY *1) is not pressed ON: Lock side of door control switch (power window regulator master switch ASSY or power window regulator switch ASSY *1) is pressed	-
[Door Lock SW-Unlock]	Door control switch (power window regulator master switch ASSY or power window regulator switch ASSY *1) unlock signal / OFF or ON	OFF: Unlock side of door control switch (power window regulator master switch ASSY or power window regulator switch ASSY *1) is not pressed ON: Unlock side of door control switch (power window regulator master switch ASSY or power window regulator switch ASSY *1) is pressed	-
[P Door Courtesy]	Passenger's door courtesy light switch signal / ON or OFF	ON: The passenger's door is open. OFF: The passenger's door is closed.	-
[Luggage Courtesy SW]	Trunk courtesy switch signal / OFF or ON	OFF: The trunk is closed. ON: The trunk is open.	-
[Ignition]	Ignition switch state / OFF or ON	OFF: IG SW OFF ON: IG SW ON	-
[ACC SW]	Ignition switch state / OFF or ON	OFF: IG SW OFF ON: Ignition switch ON (ACC)	-
[Key Unlock Warning SW]	Unlock warning switch signal / OFF or ON	OFF: Key is not inserted in ignition key cylinder ON: Key is inserted in ignition key cylinder	-

*1: With passenger's door control switch

2. Active test

NOTE:

By performing active tests with SSM4, you can operate relays, VSV, actuators and other devices without removing any parts. This functional inspection method is very useful because it helps check state-related signals and identify the faulty part without removing any parts and wiring. By performing active tests at an initial phase of troubleshooting, you can save time for diagnosis. The data monitor information can be displayed during active test.

(1) Connect the SSM4 to the DLC3.
(2) Turn the ignition switch to ON.
(3) Turn on the SSM4.
(4) Input the following menus: [Body Control] →[Active Test]
(5) Follow the SSM4 on-screen instructions to perform an active test.

Main body

Item Name	Description/display range	Normal value	Remarks
[Door Lock]	Door lock motor	OFF / Unlock/ Lock	-
[D-Door Unlock]	Driver's door lock motor	OFF/ON	-
[Trunk and Back-Door Open]	Back door lock motor	OFF/ON	-

All door lock / unlock function does not operate with door control switches or door key cylinders

Circuit description

The main body ECM (multiplex network body computer) detects signals from the door control switches and driver's door key cylinder switch, and actuates the door lock motor of each door.

Circuit figure

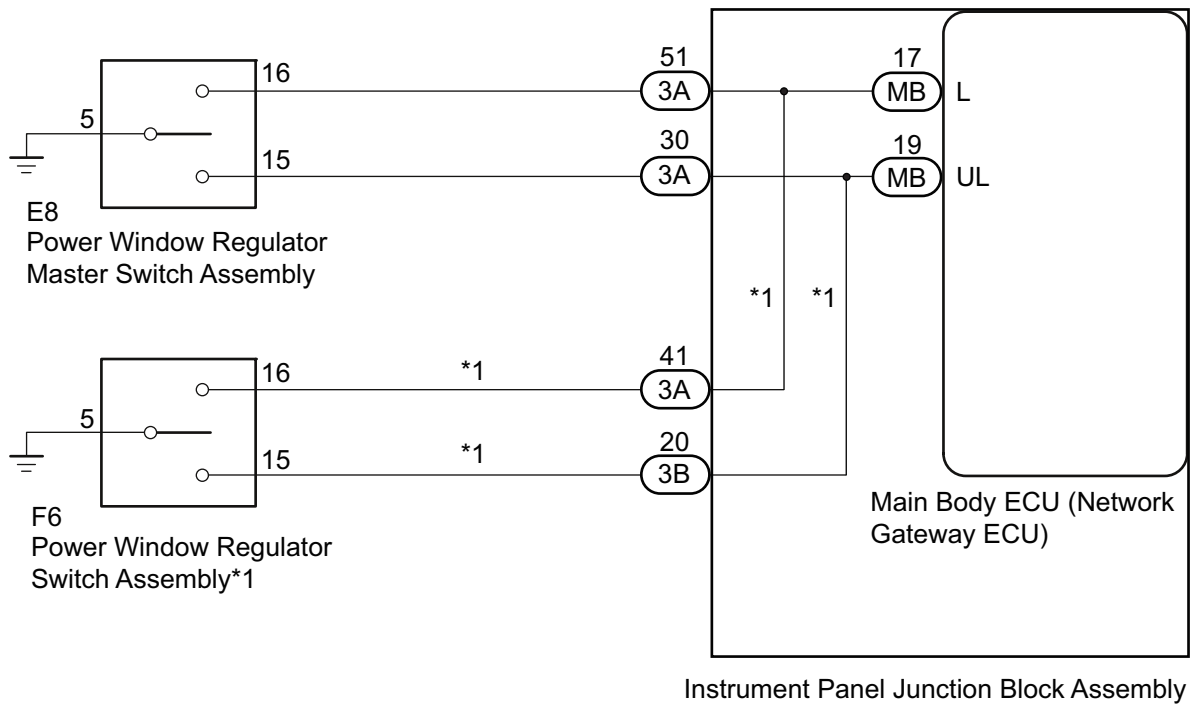

*1: w/ Passenger Side Door Control Switch

SL-02025

Inspection steps

1	Door lock operation check

(1) Proceed to a next step according to the symptoms listed in the table below.

Result

Result	Go to
Doors can not be locked via the power window regulator master switch ASSY	A
Doors can not be locked via the power window regulator master switch ASSY *1	B

*1: With passenger's side door control switch

B → Go to Step 6.

A

2	Reading values with SSM4 (door lock SW - lock & door lock SW - unlock)

(1) Connect the SSM4 to the DLC3.
(2) Turn the ignition switch to ON.
(3) Turn on the SSM4.
(4) Input the following menus: [Body Control] →[Data monitor]
(5) Based on the contents of the SSM4 display, read the data monitor.

Main body

Item Name	Description/display range	Normal value	Remarks
[Door Lock SW-Lock]	Door control switch (power window regulator master switch ASSY) lock signal / OFF or ON	OFF: Lock side of door control switch (power window regulator master switch ASSY) is not pressed ON: Lock side of door control switch (power window regulator master switch ASSY) is pressed	-
[Door Lock SW-Unlock]	Door control switch (power window regulator master switch ASSY) unlock signal / OFF or ON	OFF: Unlock side of door control switch (power window regulator master switch ASSY) is not pressed ON: Unlock side of door control switch (power window regulator master switch ASSY) is pressed	-

Criteria: While the switch is operating, SSM4 displays the contents as indicated in the table

NG → Go to Step 3.

OK →

Replacement of the main body ECM (multiplex network body ECM)

3	Inspect the power window regulator master switch ASSY

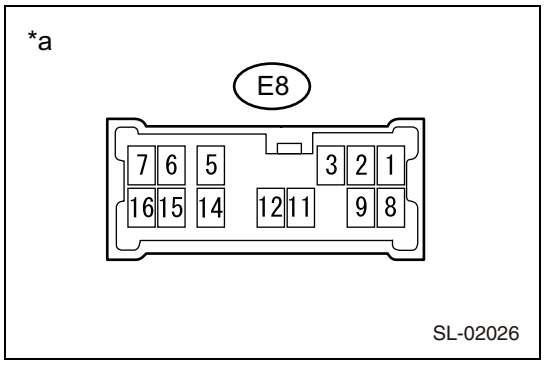

(1) Remove the power window regulator master switch ASSY
(2) Measure the resistance according to the following table.
Standard resistance

Tester connection	Switch conditions	Specified condition
E8-16 - E8-5	Lock switch is pressed	1 Ωor less
	off	10 kΩ or more
E8-15 - E8-5	Unlock switch is pressed	1 Ωor less
	off	10 kΩ or more

Captions in illustration

*a	Connector not connected (Power window regulator master switch ASSY (door control switch))

NG → Replacement of power window regulator master switch ASSY

OK

4	Inspect the wiring harnesses and connectors (power window regulator master switch - junction block and chassis ground)

(1) Remove the 3A connector of the instrument panel junction block ASSY.
(2) Remove the E8 power window regulator master switch ASSY (door control switch) connector.
(3) Measure the resistance according to the following table.

Standard resistance

Tester connection	Conditions	Specified condition
3A-51 - E8-16	Always	1 Ωor less
3A-30 - E8-15	Always	1 Ωor less
E8-5 - chassis ground	Always	1 Ωor less
3A-51 or E8-16 - chassis ground	Always	10 kΩ or more
3A-30 or E8-15 - chassis ground	Always	10 kΩ or more

NG → Repair or replacement of wiring harness or connector

OK

5	Inspect the instrument panel junction block ASSY unit.

(1) Remove the instrument panel junction block ASSY.
(2) Remove the main body ECM (multiplex network body ECM) from the instrument panel junction block ASSY.

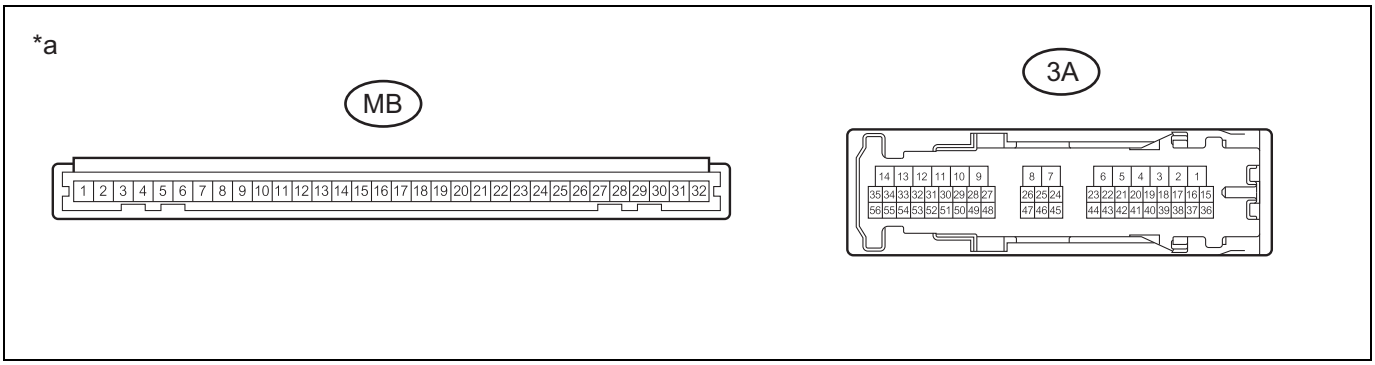

Captions in illustration

*a	Connector not connected (Instrument panel junction block ASSY)	-	-

(3) Measure the resistance according to the following table.

Standard resistance

Tester connection	Conditions	Specified condition
MB-17 - 3A-51	Always	1 Ωor less
MB-19 - 3A-30	Always	1 Ωor less

NG → Replacement of the instrument panel junction block ASSY

OK

Replacement of the main body ECM (multiplex network body ECM)

6	Reading values with SSM4 (door lock SW - lock & door lock SW - unlock)

(1) Connect the SSM4 to the DLC3.
(2) Turn the ignition switch to ON.
(3) Turn on the SSM4.
(4) Input the following menus: [Body Control] →[Data monitor]
(5) Based on the contents of the SSM4 display, read the data monitor.

Main body

Item Name	Description/display range	Normal value	Remarks
[Door Lock SW-Lock]	Door control switch (power window regulator switch ASSY) lock signal / OFF or ON	OFF: Lock side of door control switch (power window regulator switch ASSY) is not pressed OFF: Lock side of door control switch (power window regulator switch ASSY) is pressed	-
[Door Lock SW-Unlock]	Door control switch (power window regulator switch ASSY) unlock signal / OFF or ON	OFF: Unlock side of door control switch (power window regulator switch ASSY) is not pressed OFF: Unlock side of door control switch (power window regulator switch ASSY) is pressed	-

Criteria: While the switch is operating, SSM4 displays the contents as indicated in the table.

NG → Go to Step 7.

OK

Replacement of the main body ECM (multiplex network body ECM)

DL

7	Inspect the power window switch

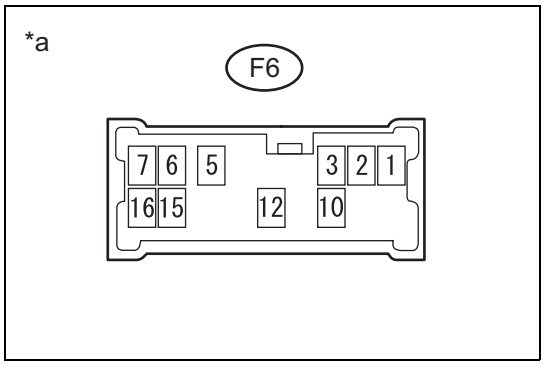

(1) Remove the power window regulator switch ASSY.
(2) Measure the resistance according to the following table.
Standard resistance

Tester connection	Switch conditions	Specified condition
F6-16 - F6-5	Lock switch is pressed	1 Ωor less
	off	10 kΩ or more
F6-15 - F6-5	Unlock switch is pressed	1 Ωor less
	off	10 kΩ or more

Captions in illustration

*a	Connector not connected (Power window regulator master switch ASSY (door control switch))

NG → Replace the power window switch

OK

8	Inspect the wiring harnesses and connectors (power window switch - junction block and chassis ground)

(1) Remove the 3A and 3B instrument panel junction block ASSY connectors.
(2) Remove the F6 power window regulator switch ASSY connector.
(3) Measure the resistance according to the following table.
Standard resistance

Tester connection	Conditions	Specified condition
3A-41 - F6-16	Always	1 Ωor less
3B-20 - F6-15	Always	1 Ωor less
F6-5 - Chassis ground	Always	1 Ωor less
3A-41 or F6-16 - chassis ground	Always	10 kΩ or more
3B-20 or F6-15 - chassis ground	Always	10 kΩ or more

NG → Repair or replacement of wiring harness or connector

OK

9	Inspect the instrument panel junction block ASSY unit.

(1) Remove the instrument panel junction block ASSY.
(2) Remove the main body ECM (multiplex network body ECM) from the instrument panel junction block ASSY.

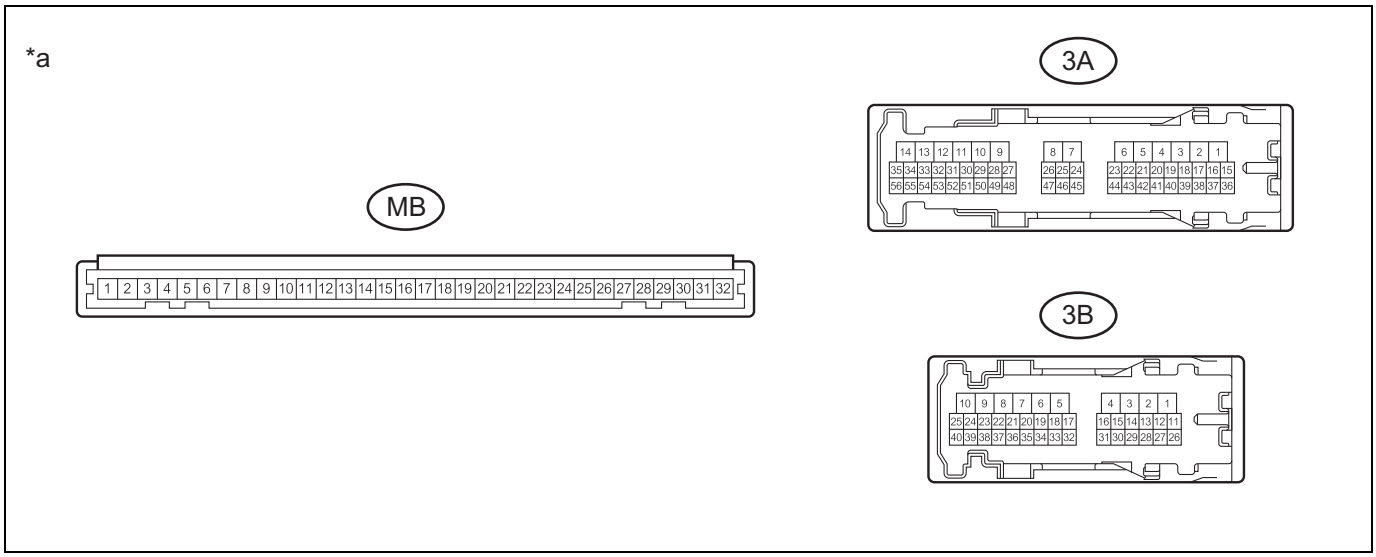

Captions in illustration

*a	Connector not connected (Instrument panel junction block ASSY)	-	-

(3) Measure the resistance according to the following table.

Standard resistance

Tester connection	Conditions	Specified condition
MB-17 - 3A-41	Always	1 Ωor less
MB-19 - 3B-20	Always	1 Ωor less

NG → Replacement of instrument panel junction block ASSY

OK

Replacement of the main body ECM (multiplex network body ECM)

DL

Wireless door lock control system (with entry & start system)

Precautions

1. Precautions for each function
   (1) Precautions for electrical key transmitter SUB-ASSY
   The electrical key transmitter SUB-ASSY is a delicate device.
   Observe the following precautions in handling the electrical key transmitter SUB-ASSY:
   (a)Do not drop or hit the electrical key transmitter SUB-ASSY.
   (b)Do not leave the electrical key transmitter SUB-ASSY in high-temperature locations for a prolonged period of time.
   (c)Do not wash the electrical key transmitter SUB-ASSY in an ultrasound bath.
   (d)Keep the electrical key transmitter SUB-ASSY away from magnets and magnetized objects.
   (e)Do not apply a sticker or the like on the electrical key transmitter SUB-ASSY.

Parts location

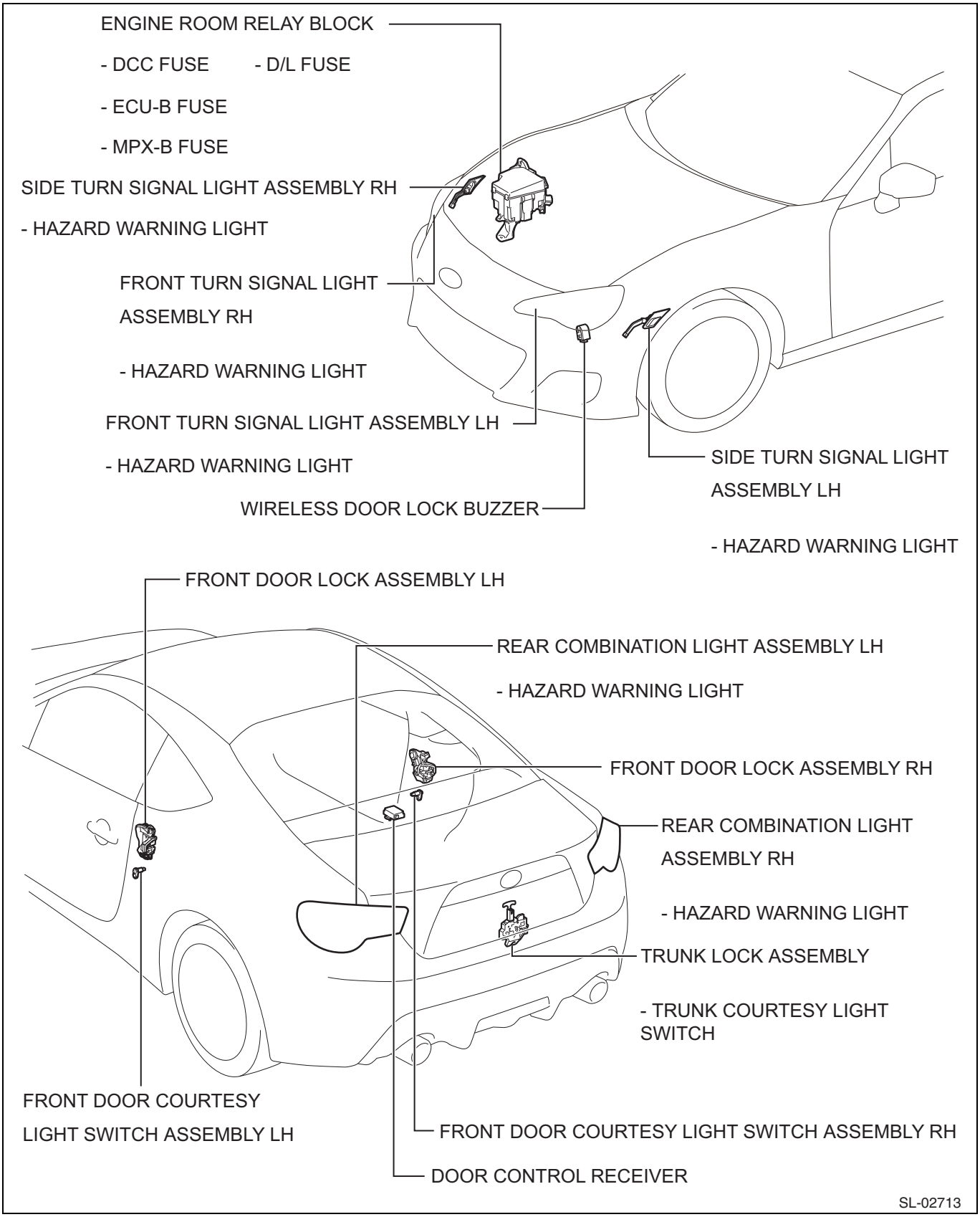

DL

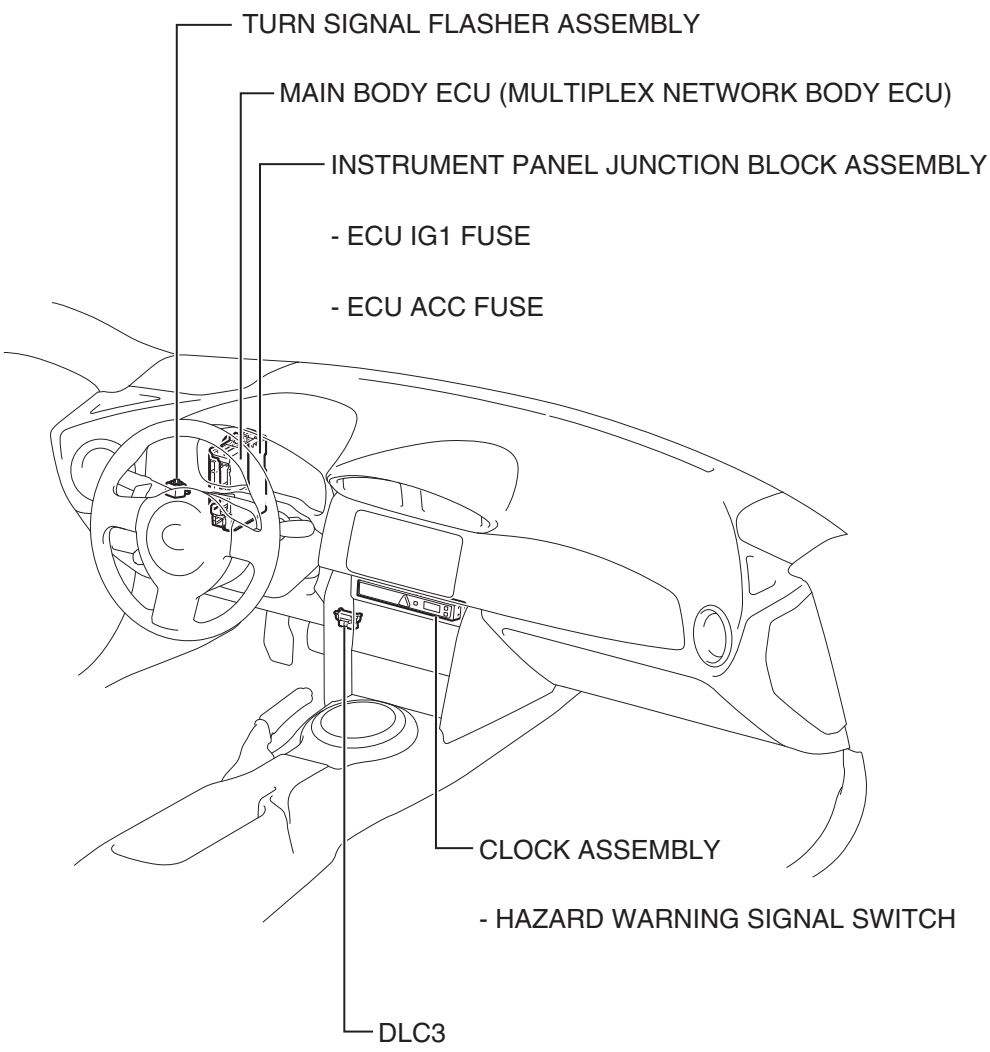



CERTIFICATION ECU (SMART KEY ECU ASSEMBLY)

REFER TO THE “REGISTRATION MANUAL FOR IMMOBILIZER” FOR ATTACHMENT POSITION.

SL-02027

System diagram

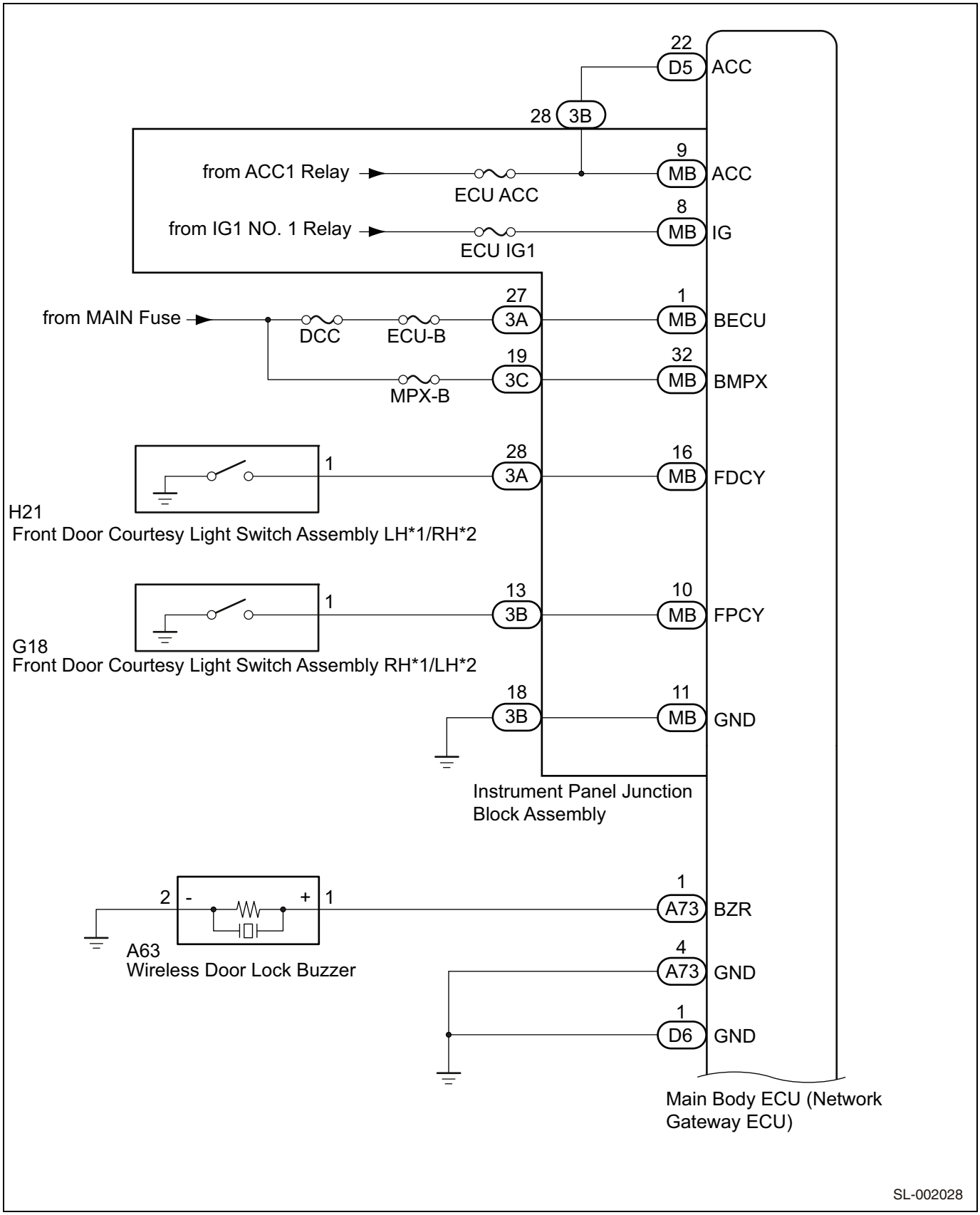

DL

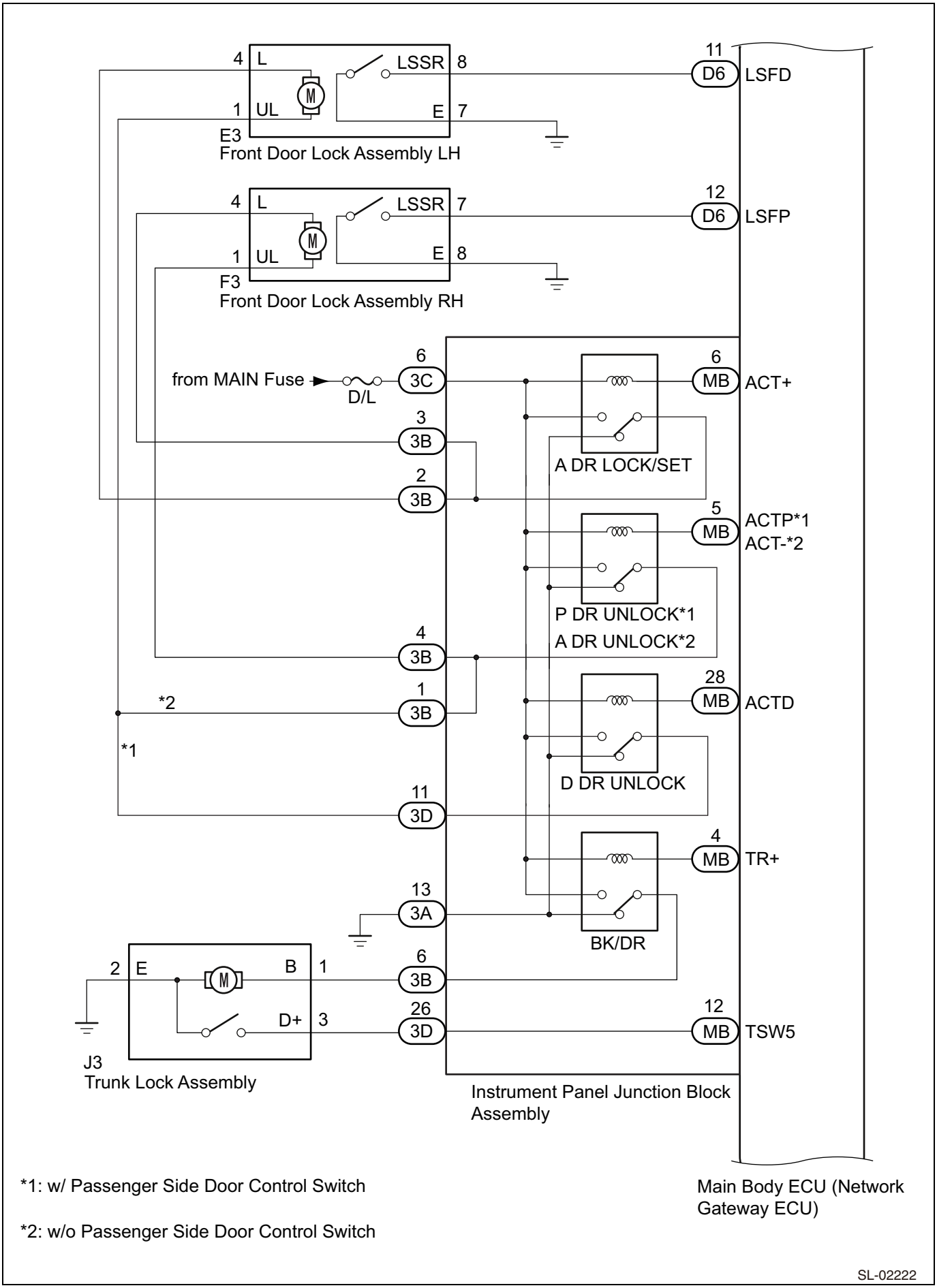

*1: w/ Passenger Side Door Control Switch

*2: w/o Passenger Side Door Control Switch

SL-02222

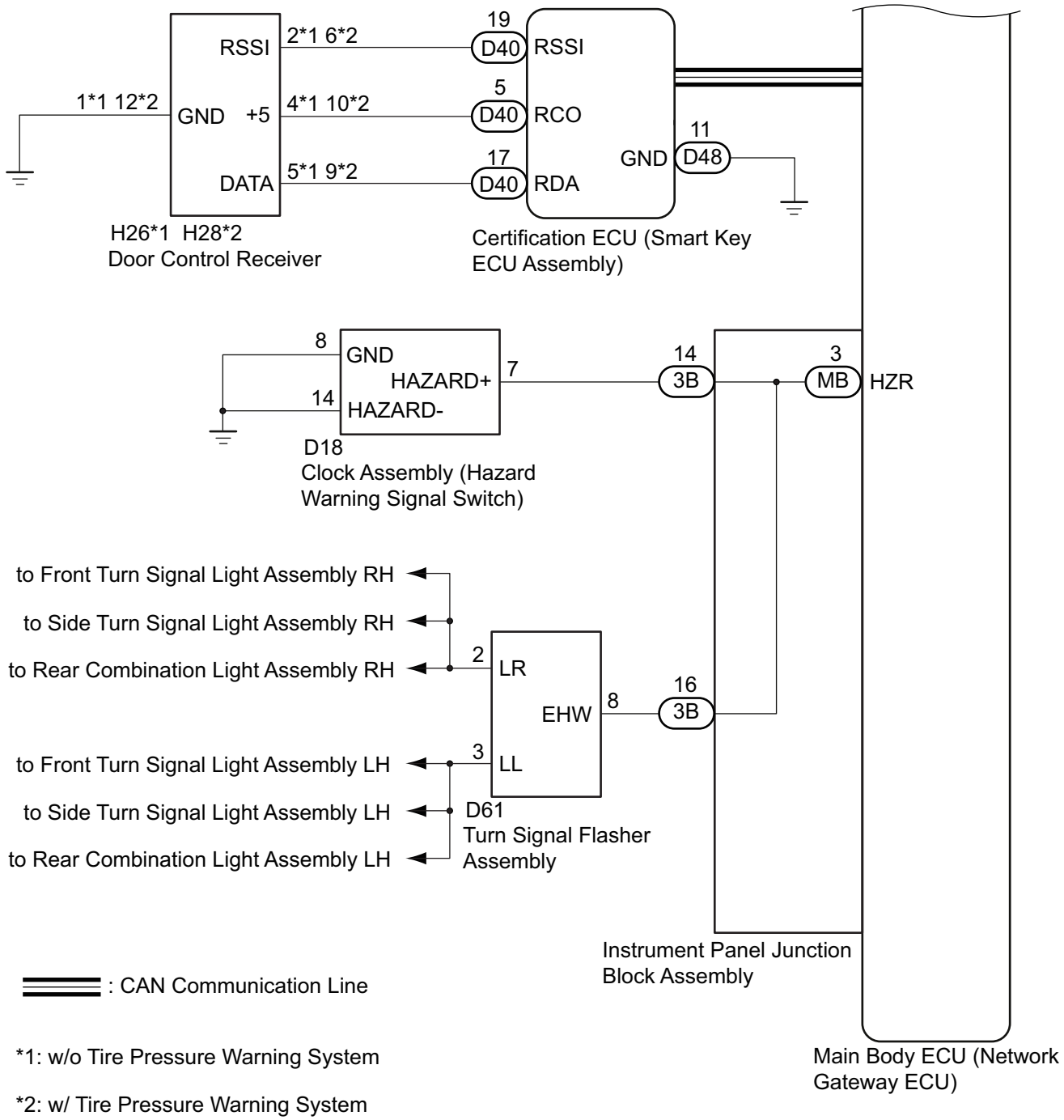

List of communication line

ECM transmission (transmitter)	ECM reception (receiver)	Signal	Line
Collation ECM (smart key computer ASSY)	Main body ECM (multiplex network body ECM)	Wireless door lock signal	CAN
Main body ECM (multiplex network body ECM)	Combination meter ASSY	Hazard warning signal	CAN

Description of functions

1. Wireless door lock control system
   (1) The wireless door lock control system can be used to lock and unlock all doors from a distant position. This system is controlled by transmitting radio wave signals from the electrical key transmitter SUB-ASSY to the door control receiver.

The collation ECM (smart key ECM ASSY) activates the door lock control function after the ID code authentication process.

2. Functions of the main parts

Components	Function
Electrical key transmitter SUB-ASSY	It is fitted with the lock, unlock, trunk open and panic switches. It transmits low power radio wave signals (recognition code and function code) to the door control receiver. The indicator light (LED) illuminates during transmission.
Door control receiver	It receives low power radio wave signals from the electrical key transmitter SUB-ASSY and transmits them to the collation ECM (smart key ECM ASSY).
• Front door courtesy light switch LH/RH • Trunk courtesy light switch	• It illuminates while the door is open and turns off while the door is closed. • It detects the door state (open, close) and outputs the data to the main body ECM (multiplex network body computer).
• Front door lock ASSY LH/RH	• An integrated motor locks and unlocks the door. • It transmits the door lock position of each door to the main body ECM (multiplex network body computer).
Collation ECM (smart key computer ASSY)	It transmits wireless door lock control signals in response to the code data of the door control receiver or the signals from each ECM.

*: With panic alarm control function

3. System functions

(1) The electrical key transmitter SUB-ASSY is fitted with the lock and unlock switches. By operating these switches, the driver can operate each function. The wireless door lock control system has the following functions.

NOTE:

The initial setting status of the following functions are set to ON. Some of these functions are customizable (refer to DL -29).

Function	Operation
All door lock function	When the lock switch is pressed, all doors are locked.
Driver's door unlock function	When the unlock switch is pressed, only the driver's door is unlocked.
All door unlock function (unlock 2 operation)	The driver's door is unlocked and then all other doors are unlocked when the unlock switch is pressed once more within 3 seconds after it is pressed once.
Trunk open function	When the trunk open switch of the electrical key transmitter SUB-ASSY module set SUB-ASSY is held down for 1.6 seconds or more, the trunk opens.
Answer-back function (hazard warning light)	It reports the completion of operation by flashing the hazard warning light once when the door is locked, or twice when the door is unlocked.
Answer-back function (wireless door lock buzzer)	It reports the completion of operation by sounding the wireless lock buzzer once when the door is locked or twice when the door is unlocked.
Panic alarm function	When the panic switch of the electrical key transmitter SUB-ASSY is held down for 0.8 seconds or more, the following alarms are activated. • Vehicle horn sounds. • Headlight, hazard warning light and tail light flash. • Room light illuminates (when room light door switch is ON). The panic alarms can be cancelled by pressing any (desired) switch of the electrical key transmitter SUB-ASSY during the alarm activation.
Door open warning function	When the lock switch is pressed while a door is open or not closed properly, the buzzer sounds continuously for 5 seconds. The buzzer stops sounding when all doors are closed or the unlock switch is pressed.
Auto lock function	If no door is opened within 60 seconds after the doors are unlocked using the wireless door lock control, all doors are locked automatically.
Illumination function	When the unlock switch is pressed with all doors locked, the room light illuminates simultaneously with the unlock operation.
Self diagnosis function	In the following conditions, the system transfers to the self diagnosis mode. • When the door control receiver receives normal radio wave signals from the electrical key transmitter SUB-ASSY while the system is in the self diagnosis mode, the room lamp blinks in a pattern corresponding to each switch.
Transmitter identification code registration function	7 transmitter identification codes can be registered (written and saved) in the EEPROM integrated in the collation ECM (smart key ECM ASSY).

How to troubleshoot

NOTE:

- The troubleshooting procedure for the wireless door lock control system assumes that the power door lock control system is functioning normally. Before performing the troubleshooting procedure for the wireless door lock control system, confirm that the power door lock control system is functioning normally.
- Using the following procedures, perform the wireless door lock control system troubleshooting.
- *: Use the SSM4.

1	Bring in the car

Next

2	Check the battery voltage.

Standard voltage: 11 to 14V

If the voltage is 11 V or less, charge or replace the battery before proceeding to a next step.

Next

3	Checking DTC*

(1) Check for any DTC and perform inspections if any code is output (refer to DL - 34)
(2) Clear the diagnostic code.
(3) Recheck each DTC. Based on DTC output in the above steps, simulate the symptom indicated by that DTC so that the same CAN communication system DTC or wireless door lock control system DTC output can be obtained.

Result

Result	Go to
No DTC is output	A
CAN communication system DTC is output	B
Wireless door lock control system DTC is output	C

B → Go to "CAN communication system (How to troubleshoot)" (Refer to NW - 30).

C → Proceed to "List of diagnostic codes." (Refer to DL - 36)

A

4	Symptom table

(1) Refer to symptom table (Refer to DL - 30)

Result

Result	Go to
Troubles not indicated in symptom table	A
Troubles indicated in symptom table	B

B → Go to Step 6.

A

5	General analysis and troubleshooting *

(1) Operation check (Refer to DL - 28)
(2) ECM terminals (Refer to DL - 31)
(3) Data monitor / active test (Refer to DL - 35)

Next

6	Repair or replace

Next

DL

7	Confirmation test

Next

Complete

Operation check

1. Take into account the following points when checking.
   (1) Wireless door lock/unlock function:
   The wireless door lock control function operates only when the following three conditions are met.
   (a) The engine switch is off.
   (b) All doors are closed.
   (c) Power door lock system is operating normally.
   NOTE:
   The unlock function operates even when a door is open.
   (2) The operation range of wireless door lock control function varies depending on the situation.
   (a) The operation area varies depending on the user and how the electrical key transmitter SUB-ASSY is held.
   (b) In some areas, the remote control function may work only in a part of the operation range. This is because the operation range is reduced due to the vehicle shape or surrounding environment.
   (c) Because the electrical key transmitter SUB-ASSY uses an extremely low power radio wave, the operation range may be limited or the remote control may not function if a strong radio wave or noises are present in the same frequency band as the electrical key transmitter SUB-ASSY.
   (d) If the battery charge level of the electrical key transmitter SUB-ASSY is low, the operation range is reduced and the remote control may not function.
   NOTE:
   If the electrical key transmitter SUB-ASSY is left under direct sunlight for a long time (for example, left on the meter panel), the battery charge level may decrease or other troubles may occur.
2. Inspecting wireless door lock control function
   NOTE:
   • The switches outlined in this text are those for transmitting signals. The switches are integrated in the electrical key transmitter SUB-ASSY.
   • All the functions listed below must be inspected in relation to the remote control operation range.
   (1) Confirm that the vehicle is set in an environment where the wireless control function can operate.
   (2) Inspect the basic functions.
   (a) Check that the transmitter LED illuminates three times or more when the lock switch of the electrical key transmitter SUB-ASSY is held down for 5 seconds or more.

NOTE:

If LED does not illuminate three times or more even when the switch is held down, it is possible that the battery charge level is low.

(b) Check that all doors are locked when the lock switch is pressed.

(c) Check that all doors are unlocked when the unlock switch is pressed.

(3) Check the chattering prevention function.

(a) Check that the relevant operation takes place only once without being repeated while the switch is held down. Check that the relevant operation takes place when the switch is pressed at 1 second intervals.

(4) Check the auto lock function.

(a) Press the unlock switch to unlock all doors. Check that all doors are automatically locked if no door is opened and all doors are not locked within 60 seconds.

(b) Press the unlock switch to unlock all doors. Check that the auto lock function does not operate if any door is opened or all doors are locked within 60 seconds.

(c) Press the unlock switch to unlock all doors. Check that the auto lock function does not operate if all doors are locked manually (for example, by key link operation or by pressing the lock switch) within 60 seconds.

(5) Check the switch operation false recognition prevention function.

(a) Check that all doors are not locked and unlocked by any switch operation with a transmitter not registered but are locked and unlocked by switch operations with a registered transmitter.

(6) Check the door open warning function.

(a) Check that the wireless door lock buzzer sounds continuously for 5 seconds when the lock switch is pressed while a door is open or not closed properly.

(7) Check the answer-back function (hazard warning lights flashing).

(a) Check that the hazard warning light blinks once and all doors are locked simultaneously when the lock switch is pressed.

(b) Check that the hazard warning light blinks twice and all doors are unlocked simultaneously when the unlock switch is pressed.

(8) Check the answer-back (wireless door lock buzzer) function*.

(a) Check that the buzzer sounds once and all doors are locked simultaneously when the lock switch is pressed.

(b) Check that the buzzer sounds twice and the driver's door is unlocked simultaneously when the unlock switch is pressed.

(c) When the trunk is opened by wireless operation, the wireless door lock buzzer sounds.

(9) Check the panic alarm control function*.

(a) Check that the horn sounds for 60 seconds, the headlight and tail light flash, and the room light illuminates (if the light switch is set to the door position) when the panic switch is held down for 0.8 seconds or more. Check that the horn stops and the lights stop flashing when any switch of the transmitter is pressed.

(10) Check the entry illumination function.

(a) Check that the map light illuminates (if the light switch is set to the door position) and all doors are unlocked when the unlock switch is pressed with all doors locked.

customize function

1. Customization of wireless door lock control system (with entry & start system)

(1) Notes on customization via SSM4

CAUTION:

- When a customer requests a function change, check if the function is customizable.
- Before customization, record the current settings.
- Before performing the troubleshooting procedure for a function, check that the function is set to the initial settings.

NOTE:

Some items may not be displayed depending on the destination and equipment.

(a) Connect the SSM4 to the DLC3.

(b) Turn the engine switch (IG) to ON.

(c) Turn on the SSM4.

(d) Input the following menus: [Body Control] →[Customize]

(e) Referring to the table below, perform settings.

Wireless door lock

Display name	Initial setting	Contents	Setting	Controller ECM
[Keyless Control]	Yes	Settings for the function that allows you to select to lock the door via operation of the electrical key transmitter SUB-ASSY (Electronic key)	Yes or NO	Main body ECM (multiplex network body ECM)
[Wireless Buzzer Resp]	ON	Wireless door lock buzzer response	OFF or ON	
[Hazard Answer Back]	ON	When the wireless lock switch of the transmitter is pressed, all hazard warning lights are illuminated simultaneously. All hazard warning lights illuminate twice when the unlock switch is pressed.	OFF or ON	
[Open Door Warning]	ON	The buzzer sounds when the lock is pressed while any door is open.	OFF or ON	
[Unloocking operation]	Yes	Settings for the function where all doors are unlocked when the electrical key transmitter SUB-ASSY (Electronic key) is operated twice	Yes or NO	
[Panic Alarm Function]	ON	Function to activate the anti-theft system when the panic switch of electrical key transmitter SUB-ASSY is held down for 0.8 seconds or more.	OFF or ON	
[Wireless Auto Lock]	ON	This function turns ON or OFF the wireless auto lock function.	OFF or ON	
[Auto Lock Time]	60 seconds	This function controls the time from unlocking all doors until the activation of auto lock function.	30 seconds, 60 seconds, 120 seconds	
[Trunk lid unlocking operation]	Long press(short)	Settings for the method of operation when opening the trunk with the electrical key transmitter SUBASSY (Electronic key)	single press/2 times ON/Long press(short)/ Long press(long)	
[Wireless Buzzer Volume]	Level 5	Wireless door lock buzzer volume	Level 7, Level 6, Level 5,Level 4, Level 3, Level 2, Level 1, or Level 0	

DL

Symptom table

NOTE:

- Use the following table to identify the cause of the symptom. If multiple areas are listed as the causes, they are indicated in the [Faulty part] column according to the order of probability of causing the symptom. Check the possible causal areas in the list order and confirm each symptom. Replace faulty parts as necessary.
- Before inspecting the areas listed in "Possible cause" below, check the fuses and the relays related to this system.

Wireless door lock control system

Symptoms	Faulty part	Reference pages
Wireless control function and entry function do not operate	Refer to "All door entry lock and unlock function and wireless function do not operate"	-
Wireless function does not operate, but entry function operates	Replace electrical key transmitter SUB-ASSY	-
No answer-back	Refer to "No answer-back"	DL - 38
Only auto lock function does not operate properly	Perform operation check	DL - 28
	Lighting system (door courtesy light switch circuit)	-
	Main body ECM (multiplex network body ECM)	-
	Instrument panel junction block ASSY	-
Only illumination entry function does not operate	Perform operation check	DL - 28
	Lighting system	-
	Main body ECM (multiplex network body ECM)	-
	Instrument panel junction block ASSY	-
Only door open warning function does not operate	Perform operation check	DL - 28
	Lighting system (door courtesy light switch circuit)	-
	Main body ECM (multiplex network body ECM)	-
	Instrument panel junction block ASSY	-

ECM terminal arrangement

1. Check the instrument panel junction block ASSY and main body ECM (multiplex network body ECM).

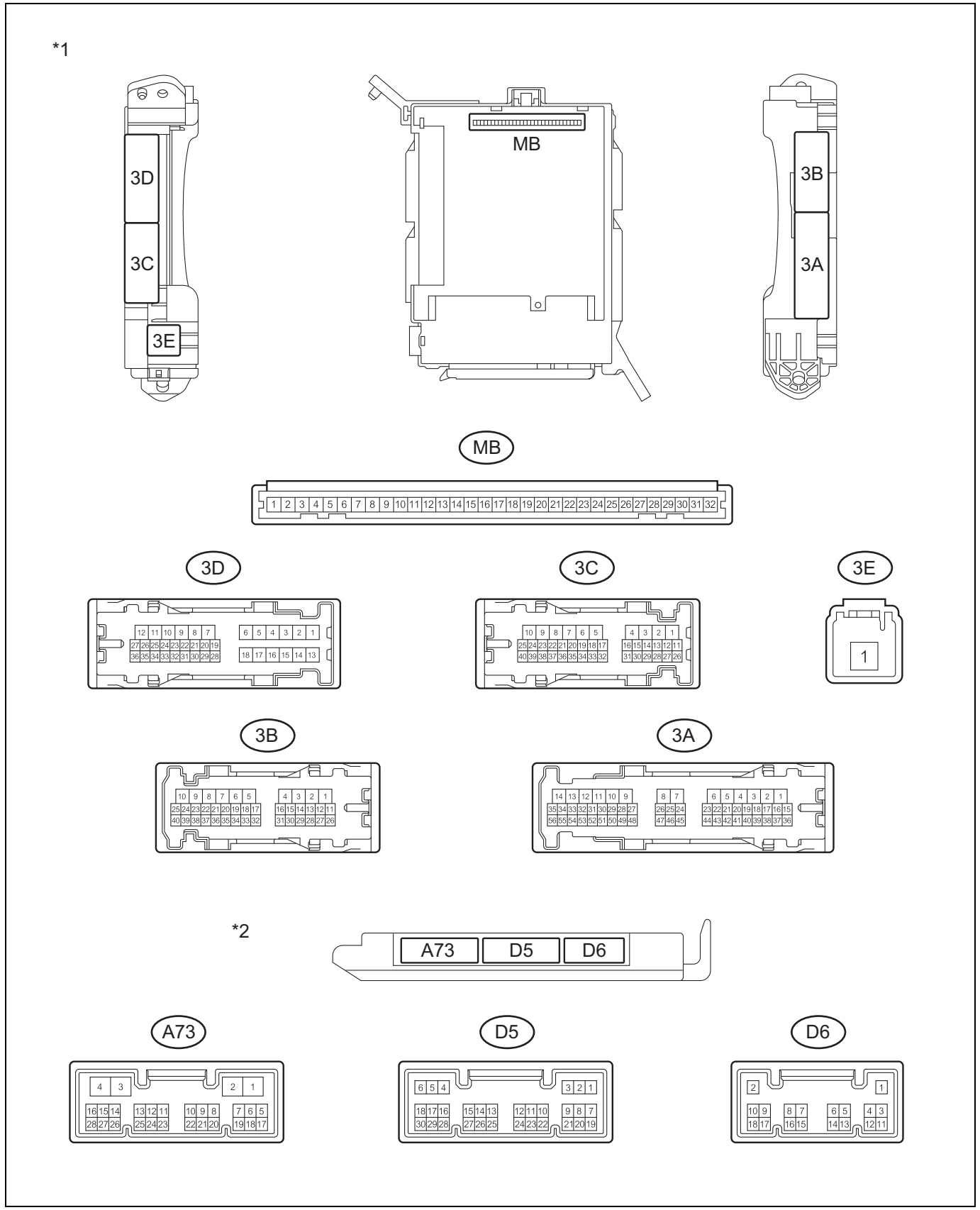

Captions in illustration

*1	Instrument panel junction block ASSY	*2	Main body ECM (multiplex network body ECM)

(1) Remove the main body ECM (multiplex network body ECM) from the instrument panel junction block ASSY.

(2) Disconnect the main body ECM (multiplex network body computer) connectors D6 and A73.
(3) Measure the resistance and voltage based on the following table.

Terminal No. (symbol)	Terminal description	Conditions	Specified condition
MB-11 - chassis ground	Ground	Always	1 Ωor less
MB-1 - chassis ground	Battery power supply	Always	11 to 14V
MB-32 - chassis ground	Battery power supply	Always	11 to 14V
MB-8 - chassis ground	Engine switch power supply	Engine switch ON	11 to 14V
		Engine switch OFF	1 V or less
MB-9 - Chassis ground	ACC power supply	Engine switch ACC	11 to 14V
		Engine switch OFF	1 V or less
D6-1 - Chassis ground	Ground	Always	1 Ωor less
A73-4 - chassis ground	Ground	Always	1 Ωor less

(4) Connect the main body ECM (multiplex network body computer) connectors D6 and A73.
(5) Install the main body ECM (multiplex network body ECM) to the instrument panel junction block ASSY.
(6) Measure the voltages and pulses according to the values indicated in the table below.

DL

Terminal No. (symbol)	Terminal description	Conditions	Specified condition
3A-28 - chassis ground	Driver's side courtesy light switch	Driver's door is open.	1 V or less
		Driver's door is closed	Pulse generation
3B-13 - chassis ground	Passenger's side courtesy light switch	The passenger's door is open.	1 V or less
		The passenger's door is closed.	Pulse generation
3D-26 - chassis ground	Trunk courtesy light switch	The trunk is open.	1 V or less
		The trunk is closed.	11 to 14V
3B-2 - chassis ground	Door lock motor lock drive output	Door control switch is not pressed	1 V or less
		Lock side of door control switch is not pressed	11 to 14V
3B-3 - chassis ground	Door lock motor lock drive output	Door control switch is not pressed	1 V or less
		Lock side of door control switch is not pressed	11 to 14V
3B-6 - chassis ground	Door lock motor lock drive output (trunk)	The trunk open button on the electrical key transmitter SUB-ASSY is not pressed.	11 to 14V
		The trunk open button on the electrical key transmitter SUB-ASSY is pressed.	1 V or less
3B-1 - Chassis ground	Door lock motor unlock drive output	Door control switch is not pressed	1 V or less
		Unlock side of door control switch is not pressed	11 to 14V
3B-4 - chassis ground	Door lock motor unlock drive output	Door control switch is not pressed	1 V or less
		Unlock side of door control switch is not pressed	11 to 14V
D6-11 - chassis ground	Driver's door unlock detection switch input	The driver's door is locked.	1 V or less
		Engine switch is OFF, all doors are closed, and driver's door is locked	Pulse generation
D6-12 - chassis ground	Driver's door unlock detection switch input	Passenger's door is unlocked	1 V or less
		Engine switch OFF, all doors closed, and passenger's door locked	Pulse generation

2. Check the collation ECM (smart key computer ASSY).

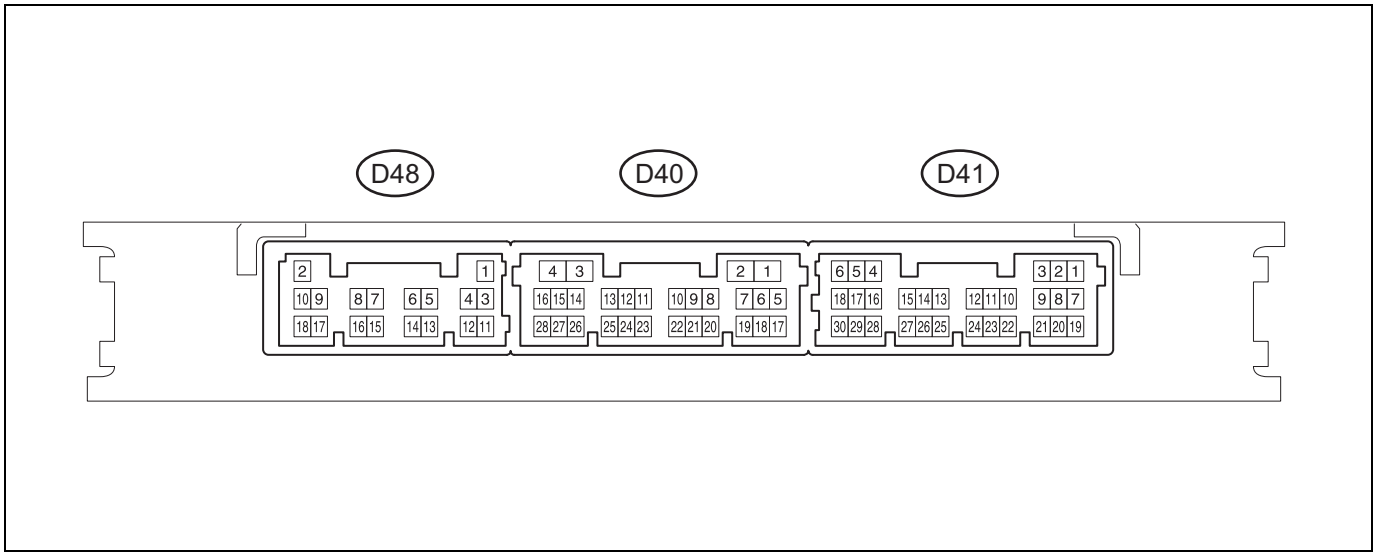

(1) Remove the D48 connector of the collation ECM (smart key ECM ASSY).
(2) Measure the voltage and resistance according to the following table.
NOTE:
Measure the wire harness side values with the connector disconnected.

Terminal No. (symbol)	Terminal description	Conditions	Specified condition
D48-2 - D48-11	+B power supply	Always	11 to 14V
D48-11 - Chassis ground	Ground	Always	1 Ωor less

If you cannot get the specified result, there could be a problem in the wiring harnesses.
(3) Reconnect the D48 connector of the collation ECM (smart key ECM ASSY).
(4) Measure the voltage according to the following table.

Terminal No. (symbol)	Terminal description	Conditions	Specified condition
D41-5 - D48-11	IG power supply	Engine switch OFF →ON (IG)	1V or less →11 to 14V
D40-5 - D48-11	Entry door control receiver power source	Engine switch OFF, all doors closed, electrical key transmitter SUB-ASSY switch not pressed →Electrical key transmitter SUB-ASSY switch is pressed	1V or less →4.5 to 5.5V
D40-17 - D48-11	Entry door control receiver data input signal	Engine switch OFF, all doors closed, electrical key transmitter SUB-ASSY switch not pressed →Electrical key transmitter SUB-ASSY switch is pressed	11 to 14 V pulse generates at equal intervals
D40-19 - D48-11	Entry door control receiver radio wave signal present	All doors locked, all doors closed, electrical key switch ON	11 to 14 V →2V or less

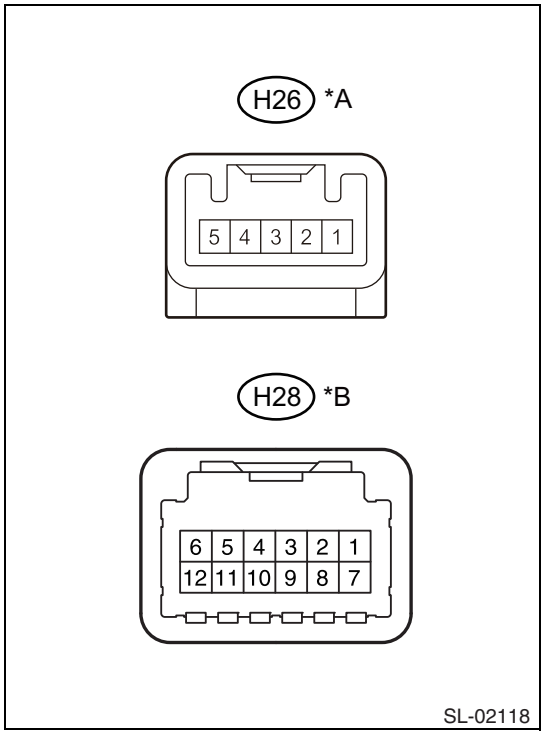

3. Inspect the door control receiver.
   (1) Disconnect the door control receiver connector H26 or H28.
   (2) Measure the resistance according to the following table.

Captions in illustration

*A	w/o Tire Pressure Warning System
*B	w/ Tire Pressure Warning System

Terminal No. (symbol)	Terminal description	Conditions	Specified condition
H26-1 - Chassis ground *1 H28-12 - Chassis ground *2	Ground	Always	1 Ωor less

*1: w/o Tire Pressure Warning System
*2: w/ Tire Pressure Warning System

(3) Reconnect the H26 or H28 door control receiver connector.
(4) Measure the voltage according to the following table.

Terminal No. (symbol)	Terminal description	Conditions	Specified condition
H26-2 - H26-1*1 H28-6 - H28-12*2	Entry door control receiver radio wave signal present	All doors locked, all doors closed, electrical key switch ON	11 to 14 V →2 V or less
H26-5 - H26-1*1 H28-9 - H28-12*2	Entry door control receiver data input signal	Engine switch OFF	11 to 14 V pulse generates at equal intervals
H26-4 - H26-1*1 H28-10 - H28-12*2	Entry door control receiver power source	Engine switch OFF, all doors closed, electrical key transmitter SUB-ASSY switch not pressed →Electrical key transmitter SUB-ASSY switch is pressed	1 V or less →4.5 to 5.5 V

*1: w/o Tire Pressure Warning System
*2: w/ Tire Pressure Warning System

Checking / clearing diagnostic codes

1. Check DTC
   (1) Connect the SSM4 to the DLC3.
   (2) Turn the engine switch (IG) to ON.
   (3) Turn on the SSM4.
   (4) Input the following menus: [Body Control] →[DTC]
   (5) Check the DTC.
2. Clear the DTC.
   (1) Connect the SSM4 to the DLC3.
   (2) Turn the engine switch (IG) to ON.
   (3) Turn on the SSM4.
   (4) Input the following menus: [Body Control] →[Clear Memory]
   (5) Clear DTC according to the following instructions displayed on the SSM4 screen.

Data monitor / active test

1. Read data list

CAUTION:

The values indicated under the normal conditions in the table below are informative values. Do not depend on reference value only when judging if the part is faulty.

NOTE:

By using the SSM4 and reading the data monitor, you can read the statuses and values for switches, sensors, actuators, and other items without removing parts. This inspection is very useful because it allows an operator to read any intermittent conditions or signals without disturbing parts or wiring. Diagnostic time can be saved by reading the data monitor information at the initial stage of the troubleshooting.

(1) Connect the SSM4 to the DLC3.
(2) Turn the engine switch (IG) to ON.
(3) Turn on the SSM4.
(4) Input the following menus: [Body Control] →[Data monitor] or [Keyless Access(Collation ECM)] →[Data monitor]
(5) Based on the contents of the SSM4 display, read the data monitor.

Main body

Item Name	Description/display range	Normal value	Remarks
[D Door Courtesy]	Driver's door courtesy light switch signal / ON or OFF	ON: Driver's door is open. OFF: Driver's door is closed	-
[D Door Lock Pos]	Driver's door unlock detection switch signal/Lock or Unlock	[Lock]: The driver's door is locked. [Unlock]: The driver's door is unlocked.	-
[P Door Courtesy]	Passenger's door courtesy light switch signal / ON or OFF	ON: The passenger's door is open. OFF: The passenger's door is closed.	-
[P Door Lock Pos]	Passenger's door unlock detection switch signal/Lock or Unlock	[Lock]: The passenger's door is locked. [Unlock]: The passenger's door is unlocked.	-
[Luggage Courtesy SW]	Trunk courtesy switch signal / OFF or ON	OFF: The trunk is closed. ON: Trunk is open	-
[Ignition]	Engine switch IG signal / ON or OFF	ON: Engine switch is ON (IG) OFF: Engine switch OFF	-
[ACC SW]	Engine switch ACC signal / ON or OFF	ON: The engine switch is on (ACC). OFF: Engine switch OFF	-
[Incorrect ROL code]	Status of different rolling code / NO or YES	No: Key rolling code matches vehicle Yes: Key rolling code does not match vehicle	-
[Incorrect ID code]	Status of different ID code / NO or YES	No: Key ID code matches vehicle Yes: Key ID code does not match vehicle	-

2. Implementation of active test

NOTE:

By performing active tests with SSM4, you can operate relays, VSV, actuators and other devices without removing any parts. This functional inspection method is very useful because it helps check state-related signals and identify the faulty part without removing any parts and wiring. By performing active tests at an initial phase of troubleshooting, you can save time for diagnosis. The data monitor information can be displayed during active test.

(1) Connect the SSM4 to the DLC3.
(2) Turn the engine switch (IG) to ON.
(3) Turn on the SSM4.
(4) Input the following menus: [Body Control] →[Active Test]
(5) Based on the SSM4 display contents, perform active tests.

Main body

Item Name	Tested parts	Control range	Remarks
[Door Lock]	Operate door lock motor [Lock]/[Unlock]	Unlock/Lock	-
[Trunk and Back-Door Open]	Trunk lock motor	OFF/ON	-
[Wireless Buzzer]	Wireless door lock buzzer	OFF/ON	-

List of diagnostic codes

NOTE:

- If a DTC is displayed during DTC check, inspect the problem point represented by that code. For details on the code, refer to "Reference page" in the DTC chart.
- Before performing a troubleshooting indicated in the table below, inspect the fuses and relays.

Wireless door lock control system

Diagnostic codes	Diagnostic items	Faulty part	Reference pages
B1242	[Wireless Door Lock Tuner Circuit]	Door control receiver wiring harness or connector Collation ECM (smart key computer ASSY)	DL - 36

DTC B1242 Malfunctions in wireless tuner system

Circuit description

The door control receiver is used to receive radio wave signals related to the entry function of the entry & start system. The collation ECM (smart key ECM ASSY) decodes the requested entry & start system operation by identifying the key code based on the radio wave signal received via the door control receiver. The door control receiver receives signals from the electrical key transmitter SUB-ASSY and transmits them to the main body ECM via the collation ECM (smart key ECM ASSY). Then, collation ECM (smart key ECM ASSY) transmits a command corresponding to the requested operation to each ECM. (Example: If a door lock operation is requested, the collation ECM (smart key ECM ASSY) transmits the door lock command to the main body ECM.)

DL

DTC NO.	DTC detecting condition	Inspection parts
B1242	When the IGN is OFF and the RC0 (5V) output from ECM is OFF, short RDA or RSSI to a ground	• Door control receiver • Wiring harness or connector • Collation ECM (smart key computer ASSY)

Circuit figure

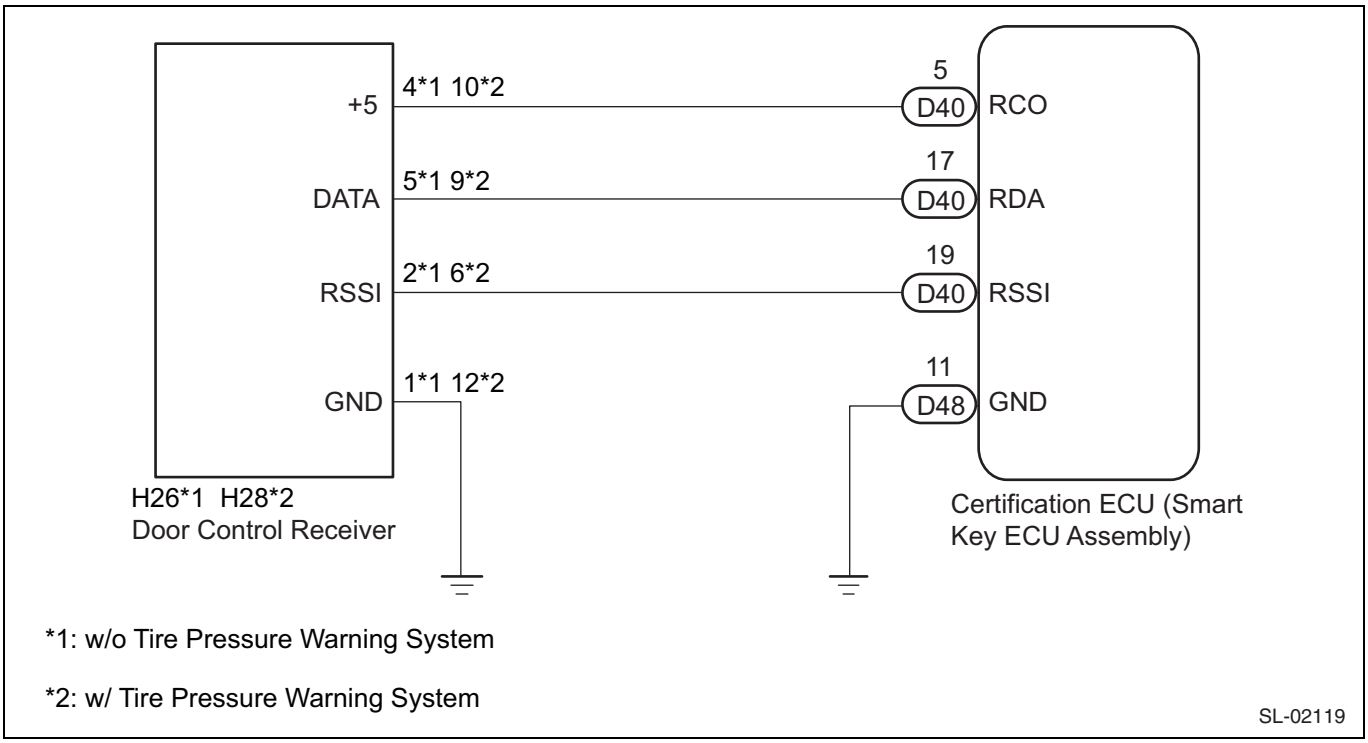

Inspection steps

CAUTION:

- The entry & start system uses multiplex communication. Before performing a troubleshooting, perform checks in the "How to troubleshoot" and check that no communication error is present. (Refer to DL - 27)
- Before replacing the collation ECM (smart key ECM ASSY), refer to the entry & start system (entry function).
- When inspecting or replacing the door control receiver or wiring harness, do not change the position or length of the wiring harness. A wiring harness too close to the door control receiver may affect the entry and wireless functions.

1	Unit inspection of the collation ECM (smart key ECM ASSY)

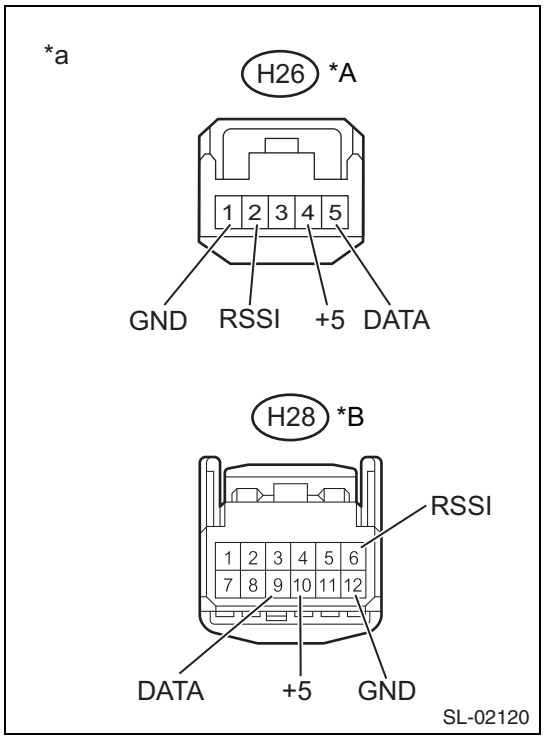

(1) Disconnect the door control receiver connector H26 or H28.
(2) Measure the resistance and voltage based on the following table.
Resistance

Inspection terminals	Inspection conditions	Standard value
H26-1 - Chassis ground *1 H28-12 - Chassis ground *2	Always	1 Ωor less

*1: w/o Tire Pressure Warning System
*2: w/ Tire Pressure Warning System

Voltage

Inspection terminals	Inspection conditions	Standard value
H26-4 - H26-1 *1 H28-10 - H28-12*2	Always	1 V or less →4.5 to 5.5 V (pulse generation)
H26-2 - H26-1 *1 H28-6 - H28-12*2	Always	11 to 14V
H26-5 - H26-1 *1 H28-9 - H28-12*2	Always	11 to 14V

*1: w/o Tire Pressure Warning System
*2: w/ Tire Pressure Warning System

Captions in illustration

*a	Front side of vehicle wiring harness connector (Door control receiver)
*A	w/o Tire Pressure Warning System
*B	w/ Tire Pressure Warning System

NG → Go to Step 2.

OK →

Door control receiver replacement (Refer to DL - 111)

2	Inspect wiring harness and connector (door control receiver collation ECM (smart key ECM))

(1) Remove the D40 and the D48 connectors of the collation ECM (smart key ECM ASSY).
(2) Measure the resistance according to the following table.
Resistance

Inspection terminals	Conditions	Standard value
D40-19 - H26-2*1 D40-19 - H28-6*2	Always	1 Ωor less
D40-17 - H26-5*1 D40-17 - H28-9*2	Always	1 Ωor less
D40-5 - H26-4*1 D40-5 - H28-10*2	Always	1 Ωor less
D48-11 - Chassis ground	Always	1 Ωor less

*1: w/o Tire Pressure Warning System
*2: w/ Tire Pressure Warning System

NG → Repair or replacement of wiring harness or connector

OK

Replace the collation ECM (smart key computer ASSY)

Answer-back function does not work (hazard + buzzer)

Circuit description

In some cases, the hazard warning light and/or the wireless door lock buzzer answer-back function * may not operate even though the wireless door lock control function is normal. In such a case, there may be a fault in the hazard warning light and the wireless door lock buzzer signal output of the main body ECM (multiplex network body ECM).

*: With wireless door lock buzzer answer-back function

Circuit figure

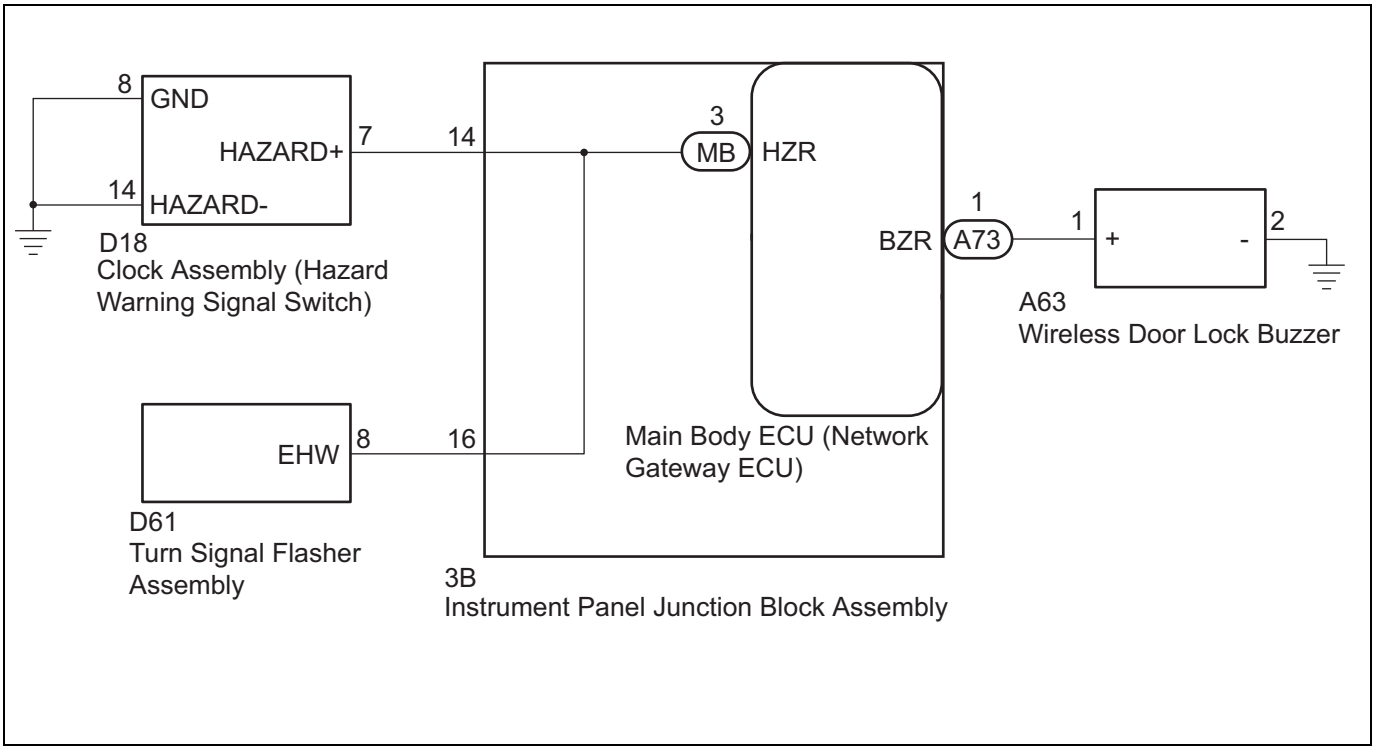

Inspection steps

CAUTION:

The wireless door lock control system uses CAN communication system. First, check that no fault is present in the CAN communication system. Refer to "How to troubleshoot".

1	Reading values with SSM4 (answer-back function)

(1) Connect the SSM4 to the DLC3.
(2) Turn the engine switch (IG) to ON.
(3) Turn on the SSM4.
(4) Input the following menus: [Body Control] →[Customize]
(5) Referring to the table below, perform settings.

Display	Initial setting	Contents	Setting	Controller ECM
[Hazard Answer Back]	ON	When a door is locked by wireless operation, the hazard warning lights flash once. When a door is unlocked by wireless operation, the hazard warning lights flash twice.	OFF or ON	Main body ECM (multiplex network body ECM)
[Wireless Buzzer Resp]	ON	Wireless door lock buzzer response	OFF or ON	Main body ECM (multiplex network body ECM)
[Wireless Buzzer Volume]	Level 5	Wireless door lock buzzer volume	Level 7, Level 6, Level 5, Level 4, Level 3, Level 2, Level 1, or Level 0	Main body ECM (multiplex network body ECM)

*: With wireless door lock buzzer answer-back function

DL

Result

Result	Go to
Both items are ON and levels except 0	A
Both items are OFF or level 0	B

B → Execute the customize function.

A

2	Inspecting wireless door lock control function

(1) Inspect the wireless door lock control functions using the electrical key transmitter SUB-ASSY.

Result

Result	Go to
The wireless door lock/unlock functions operate properly. (With wireless door lock buzzer answer-back function)	A
The wireless door lock/unlock functions operate properly. (Without wireless door lock buzzer answer-back function)	B
The wireless door lock/unlock functions do not operate properly.	C

B → Go to Step 10.

C → To symptom table

A

3	Reading values with SSM4 (door unlock detection switch)

(1) Connect the SSM4 to the DLC3.
(2) Turn the engine switch (IG) to ON.
(3) Turn on the SSM4.
(4) Input the following menus: [Body Control] →[Data monitor]

(5) Based on the contents of the SSM4 display, read the data monitor.

Main body

Tester display	Description/display range	Normal value	Remarks
[D Door Lock Pos]	Driver's door unlock detection switch signal/Lock or Unlock	[Lock]: The driver's door is locked. [Unlock]: The driver's door is unlocked.	-
[P Door Lock Pos]	Passenger's door unlock detection switch signal/Lock or Unlock	[Lock]: The passenger's door is locked. [Unlock]: The passenger's door is unlocked.	-

Criteria: SSM4 displays the contents corresponding to the door lock operations indicated in the table

NG → To Lighting system (proceed to door lock detection switch circuit)

DL

OK

4	Checking wireless answer-back operation

(1) Check the answer-back operation using the electrical key transmitter SUB-ASSY.

Result

Result	Go to
Only wireless door lock buzzer answer-back does not occur.	A
Only hazard warning light answer-back does not occur.	B

B → Go to Step 10.

A

5	Using SSM4, perform an active test (wireless door lock buzzer).

(1) Connect the SSM4 to the DLC3.
(2) Turn the engine switch (IG) to ON.
(3) Turn on the SSM4.
(4) Input the following menus: [Body Control] →[Active Test]
(5) Based on the contents of the SSM4 display, read the data monitor.

Main body

Tester display	Tested parts	Control range	Remarks
[Wireless Buzzer]	Wireless door lock buzzer	OFF/ON	-

Result

Result	Go to
Wireless door lock buzzer do not turn ON/OFF.	A
Wireless door lock buzzer turns ON/OFF.	B

NG → Replacement of the main body ECM (multiplex network body ECM)

OK

6	Inspecting wiring harness and connector (wireless door lock buzzer - main body ECM (multiplex network))

(1) Disconnect the wireless door lock buzzer connector A63 and main body ECM (multiplex network body computer) connector A73.
(2) Measure the resistance according to the following table.

Resistance

Inspection terminals	Conditions	Standard value
A63-1 - A73-1	Always	1 Ωor less
A63-2 - Chassis ground	Always	1 Ωor less
A63-1 - Chassis ground	Always	10 kΩ or more

NG → Repair or replacement of wiring harness or connector

OK

7	Inspect the meter panel junction block ASSY.

(1) Remove the instrument panel junction block ASSY.

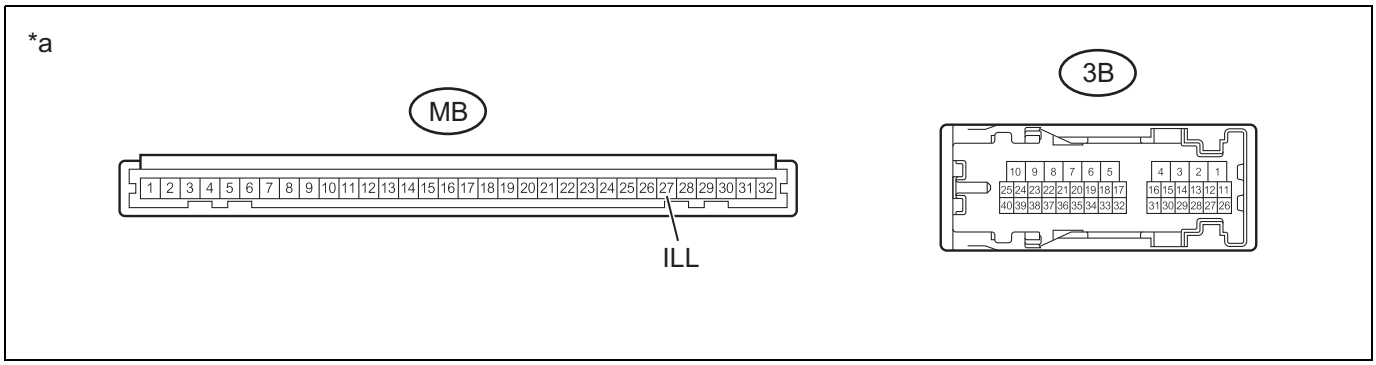

Captions in illustration

*a	Connector not connected (Instrument panel junction block ASSY)	-	-

Resistance

Inspection terminals	Inspection conditions	Standard value
MB-3 - 3B-14	Always	1 Ωor less
MB-3 - 3B-16	Always	1 Ωor less

NG → Replacement of instrument panel junction block ASSY

OK

8	Replacing wireless door lock buzzer

(1) Temporarily replace the wireless door lock buzzer with a new one.

DL

Next

9	Checking wireless door lock buzzer operation

(1) Check the wireless answer-back function operation.
Criteria: The wireless answer-back function operates properly.

NG → Replacement of the main body ECM (multiplex network body ECM)

OK

END (Wireless door lock buzzer is faulty)

DL

10	Hazard warning light operation

(1) Check that the hazard warning light blinks when the hazard warning switch is pressed.
Criteria: Hazard warning light signal is normal

NG → To Lighting system (proceed to hazard warning switch circuit)

OK

Replacement of the main body ECM (multiplex network body ECM)

Wireless door lock control system (without entry & start system)

PARTS LOCATION

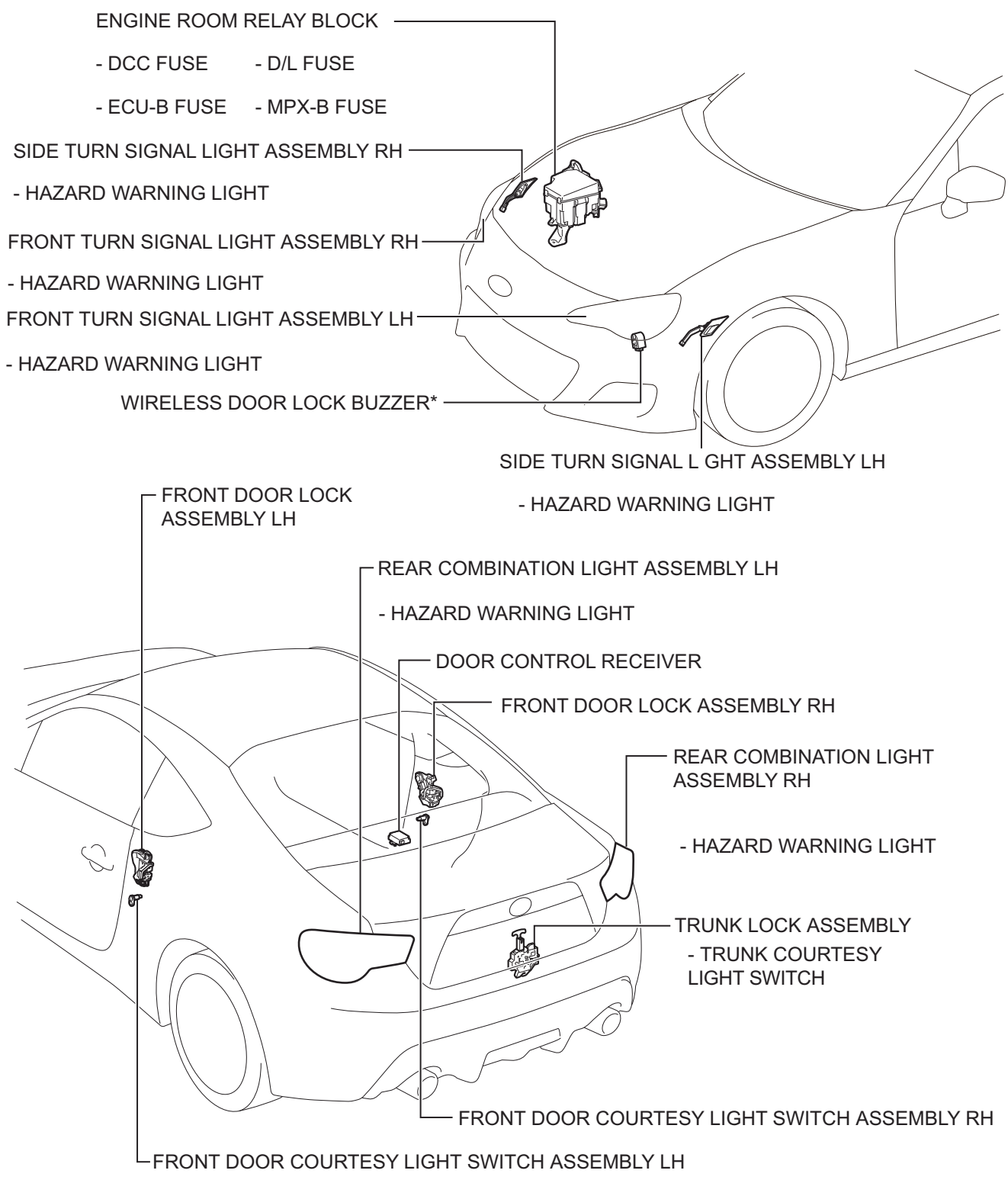

*: w/ Wireless Door Lock Buzzer Answer-back Function

SL-02714

DL

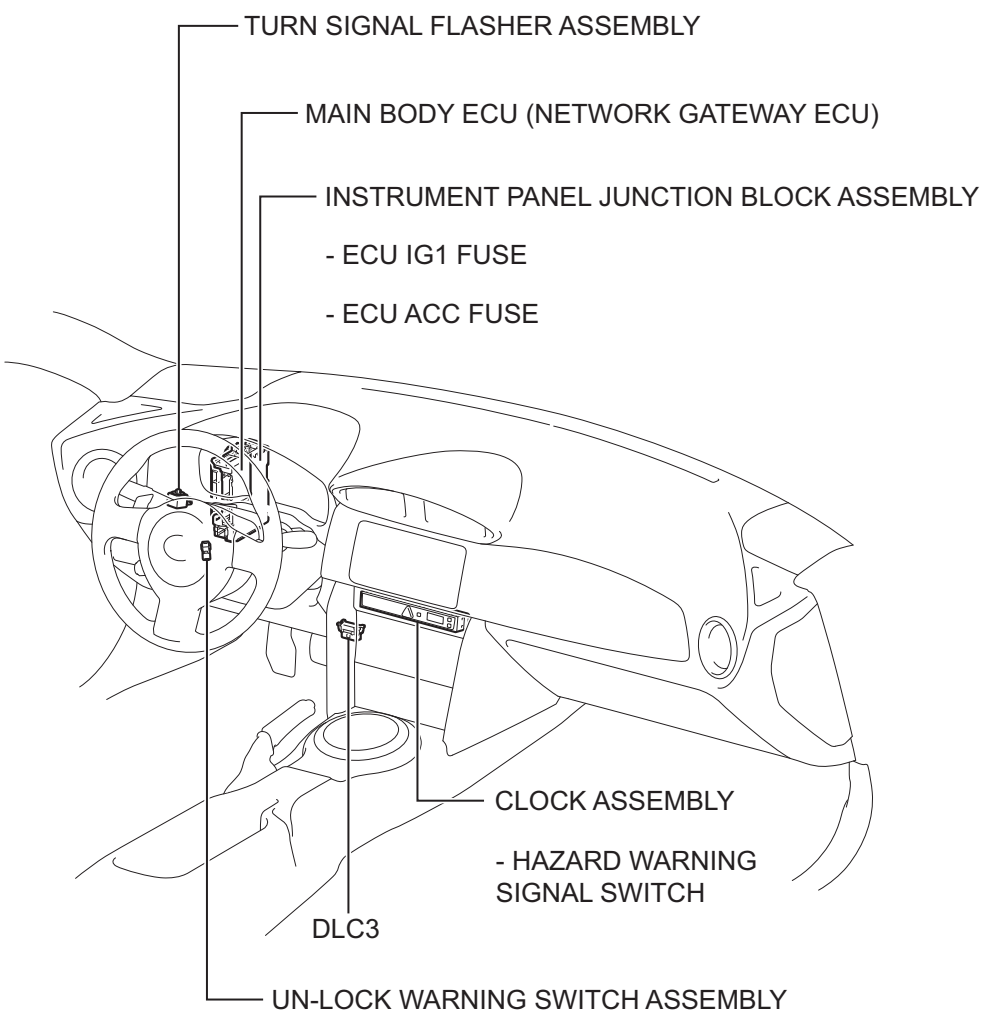
TURN SIGNAL FLASHER ASSEMBLY
MAIN BODY ECU (NETWORK GATEWAY ECU)
INSTRUMENT PANEL JUNCTION BLOCK ASSEMBLY
- ECU IG1 FUSE
- ECU ACC FUSE
CLOCK ASSEMBLY
- HAZARD WARNING SIGNAL SWITCH
DLC3
UN-LOCK WARNING SWITCH ASSEMBLY

SL-02030

DL

SYSTEM DIAGRAM

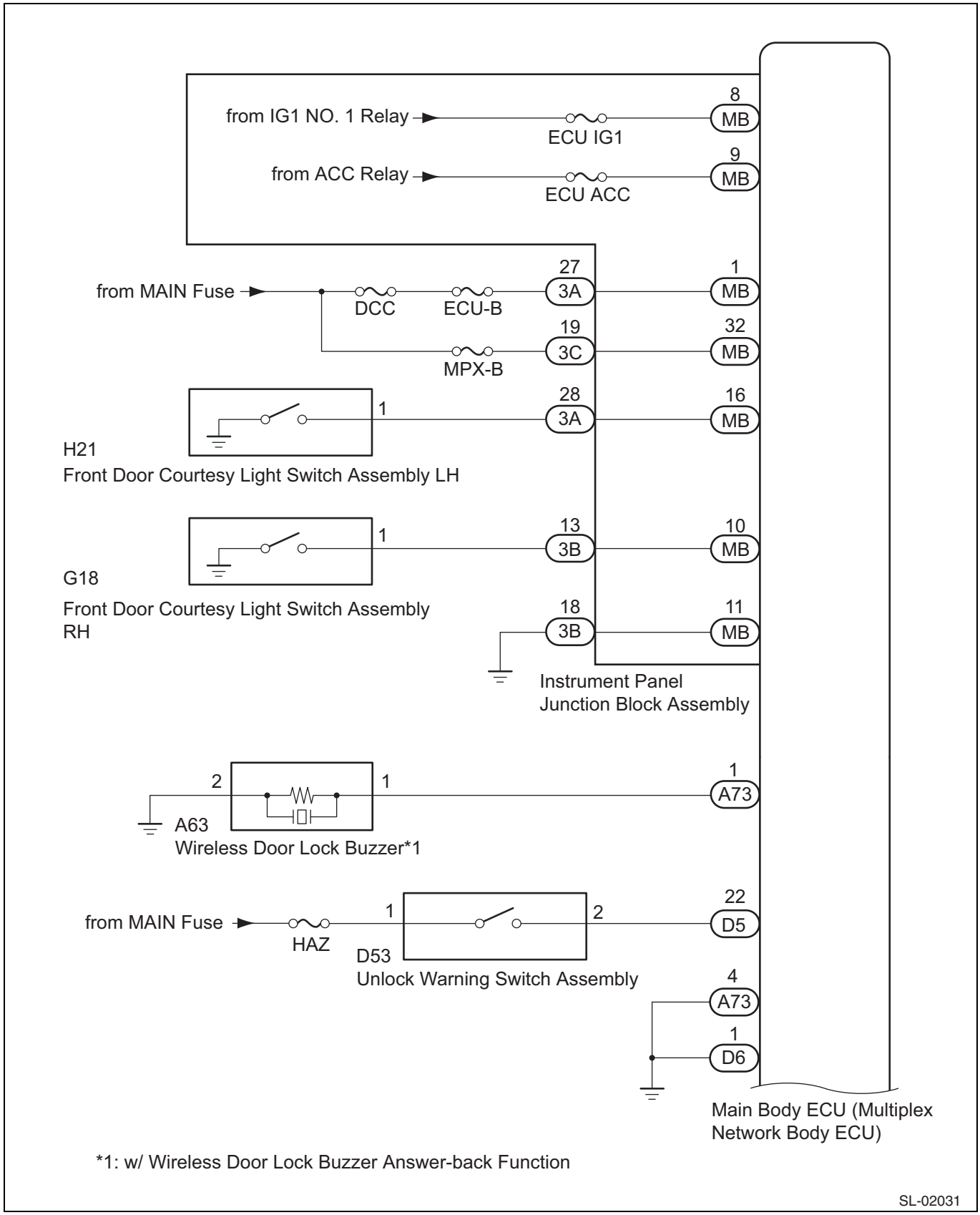

DL

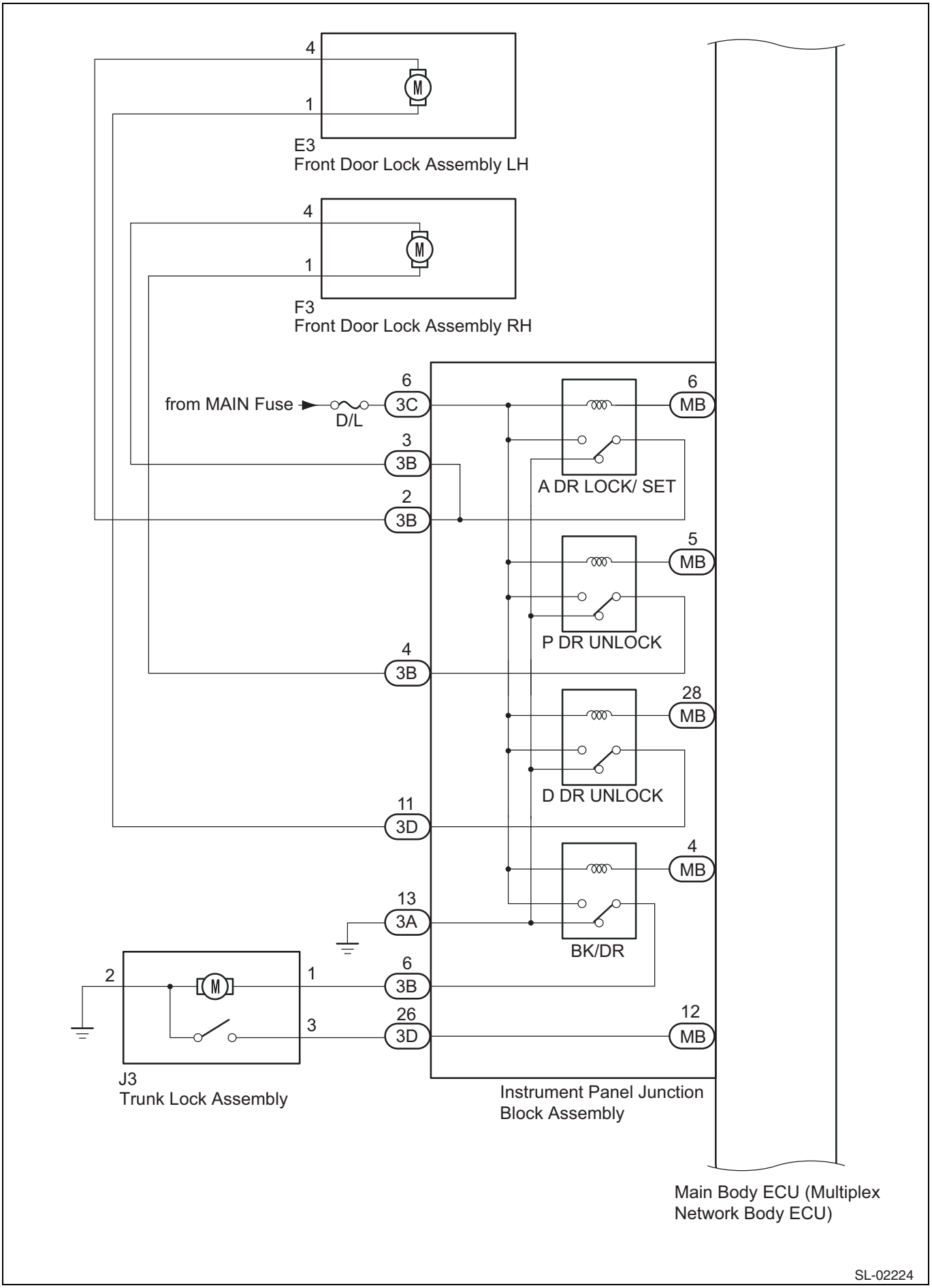
4
1
E3
Front Door Lock Assembly LH
4
1
F3
Front Door Lock Assembly RH
from MAIN Fuse
D/L
6
3C
3
3B
2
3B
4
3B
11
3D
13
3A
6
3B
26
3D
6
MB
A DR LOCK/ SET
5
MB
P DR UNLOCK
28
MB
D DR UNLOCK
4
MB
BK/DR
12
MB
2
1
3
J3
Trunk Lock Assembly
Instrument Panel Junction
Block Assembly
Main Body ECU (Multiplex
Network Body ECU)
SL-02224

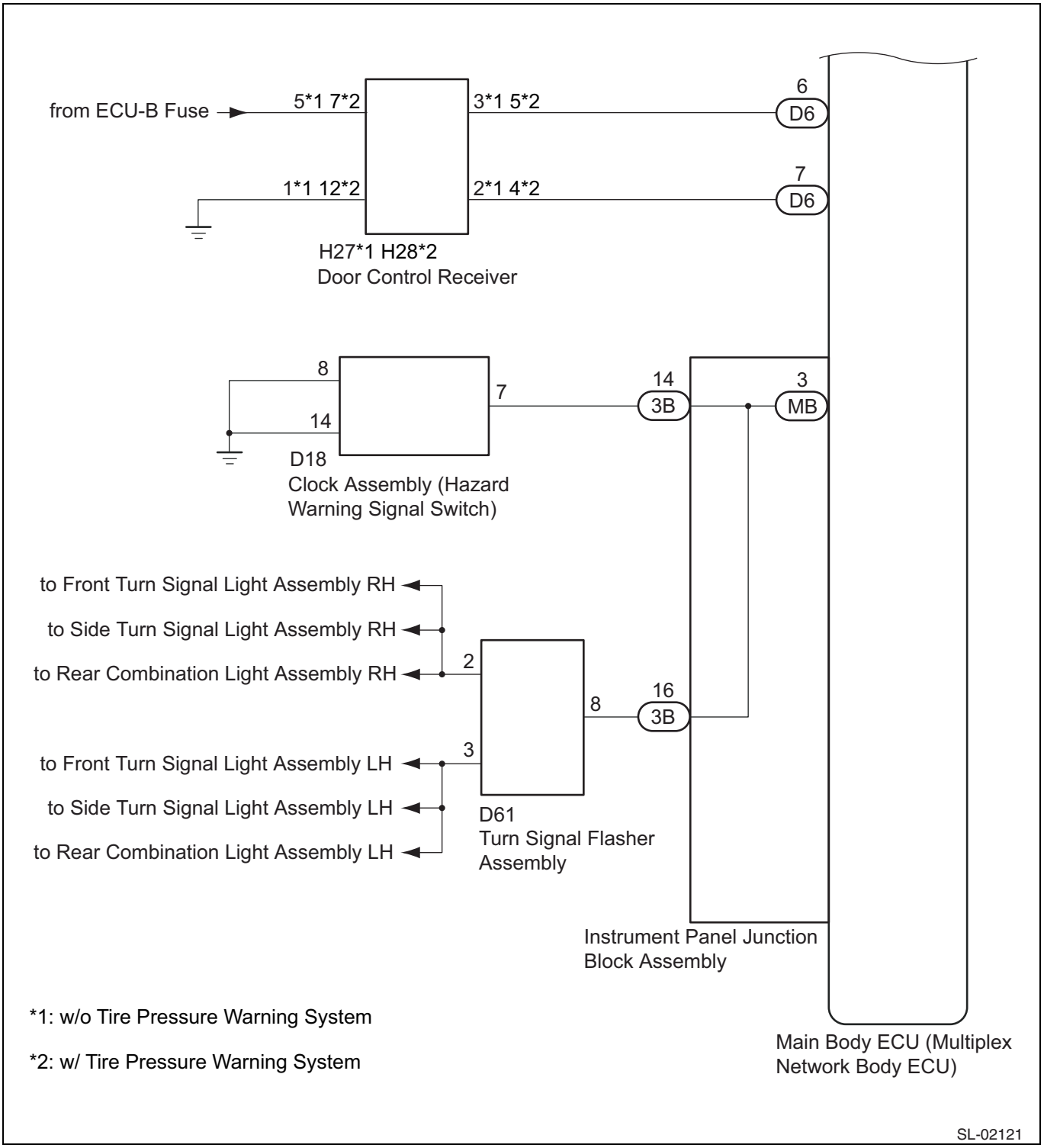

Description of functions

1. Details of wireless door control system
   (1) This system locks and unlocks doors by remote control. The wireless control system has the following functions.
   - The door control receiver execute code collation and the main body ECM (multiplex network body computer) operates the door lock control. For the communication, a serial data link is provided between the receiver and the main body ECM (multiplex network body ECM).
   - A key integrated transmitter with the following four switches is used: door lock switch, door unlock switch, trunk open switch, panic switch.

2. Functions of the main parts

Components	Function
Door control transmitter	• It is fitted with the lock, unlock, trunk open and panic switches. • It transmits low power radio wave signals (recognition code and function code) to the door control receiver.
Door control receiver	It receives low power radio wave signals from the door control transmitter and transmits them to the main body ECM (multiplex network body computer).
• Front door courtesy light switch LH/RH • Trunk courtesy light switch	• It illuminates while the door is open and turns off while the door is closed. • It detects a door state signal (open or close) and outputs the data to the main body ECM (multiplex network body computer).
• Front door lock ASSY LH • Front door lock ASSY RH	An integrated motor locks and unlocks the door.
Main body ECM (multiplex network body ECM)	It transmits wireless door lock control signals in response to the code data of the door control receiver or the signals from each ECM.

3. System functions

(1) The door control transmitter has the lock switch and unlock switch. By operating these switches, the driver can operate each function. The wireless door lock control system has the following functions.

NOTE:

The initial setting status of the following functions are set to ON. Some of these functions are customizable.

DL

Function	Procedures
All door lock function	When the lock switch is pressed, all doors are locked.
All door unlock function (unlock 2 operation)	The driver's door is unlocked and then all other doors are unlocked when the unlock switch is pressed once more within 3 seconds after it is pressed once.
Trunk open function	When the trunk open switch of the door control transmitter module set SUB ASSY is held down for 1.6 seconds or more, the trunk opens.
Answer-back function (hazard warning light)	It reports the completion of operation by flashing the hazard warning light once when the door is locked, or twice when the door is unlocked.
Answer-back function (wireless door lock buzzer)	It reports the completion of operation by sounding the wireless lock buzzer once when the door is locked or twice when the door is unlocked.
Panic alarm function	When the panic switch of the door control transmitter is held down for 0.8 seconds or more, the following alarms are activated. • Vehicle horn sounds. • Headlight, hazard warning light and tail light flash. • Room light illuminates (when room light door switch is ON). The panic alarms can be cancelled by pressing any (desired) switch of the door control transmitter during the alarm activation.
Vehicle position detection function	The vehicle position detection function is a convenient function that notifies the user of the vehicle position by sounding the vehicle horn and flashing the hazard warning light in response to a transmitter operation.
Door open warning function	When the lock switch is pressed while a door is open or not closed properly, the buzzer sounds continuously for 5 seconds. The buzzer stops sounding when all doors are closed or the unlock switch is pressed.
Auto lock function	If no door is opened within 60 seconds after the doors are unlocked using the wireless transmitter, all doors are locked automatically.
Illumination function	When the unlock switch is pressed with all doors locked, the room light illuminates simultaneously with the unlock operation.
Self diagnosis function	In the following conditions, the system transfers to the self diagnosis mode. • When the door control receiver receives normal radio wave signals from the door control transmitter while the system is in the self diagnosis mode, the room light blinks in a pattern corresponding to each switch.
Transmitter identification code registration function	6 transmitter identification codes can be registered (written and saved) in the EEPROM integrated in the door control receiver.

4. Transmitter identification code registration function

(1) The following table indicates the 3 ID registration function modes that allow 6 different types of codes to be registered. The codes are registered electronically in EEPROM inside the door control receiver (saved after written).

Mode	Function
Keyless ID additional registration	Adds a newly received code while maintaining the previously registered codes. This mode is used to add a new transmitter. If the number of registered codes exceeds 6, the oldest one of the existing registered codes is erased.

Mode	Function
Keyless ID rewrite	Erase the existing registered codes and registers new input codes only.
Readout the number of keyless ID registration	Checks how many codes are registered. When adding a new code, you can check how many codes are already saved using this mode.

5. Conditions for disabling wireless functions
   (1) The lock function does not operate if either of the following conditions is met.
   - Any door is open.
   - Key is inserted in ignition key cylinder.

   (2) The unlock function does not operate if the following condition is met.
   - Key is inserted in ignition key cylinder.

How to troubleshoot

NOTE:

- The troubleshooting procedure for the wireless door lock control system assumes that the power door lock control system is functioning normally. Before performing the troubleshooting procedure for the wireless door lock control system, confirm that the power door lock control system is functioning normally.
- Using the following procedures, perform the wireless door lock control system troubleshooting.
- *: Use the SSM4.

DL

1	Bring in the car

Next

2	Check battery voltage

(1) Inspect the battery voltage.
Standard voltage: 11 to 14V
If the voltage is 11 V or less, charge or replace the battery before proceeding to a next step.

Next

3	Check CAN communication system function *

(1) Check CAN communication system. (Refer to NW - 30)

Result

Result	Go to
Functioning properly	A
Not functioning properly	B

B → To CAN communication system (How to troubleshoot) (Refer to NW - 30)

A

4	Symptom table

Result

Result	Go to
Troubles not indicated in symptom table	A
Troubles indicated in symptom table	B

B → Go to Step 6.

A

5	General analysis and troubleshooting *

(1) ECM terminals (Refer to DL - 54)
(2) [Data monitor] / [Active Test] (Refer to DL - 57)
(3) Operation check (Refer to DL - 50)

Next

6	Repair or replace

NOTE:
If the door control transmitter or door control receiver is replaced, register the collation code.

Next

7	Confirmation test

Next

Complete

Operation check

1. Functions and operation status
   (1) The wireless door lock control function operates only when the following four conditions are met.
      (a)Key is not inserted in ignition key cylinder.
      (b)Power door lock system is operating normally.
      (c)Function is not disabled by customization.
      (d)All doors are closed. (Excluding unlock)
      NOTE:
      The unlock function operates even when a door is open.
   (2) The operation range varies depending on the situation.
      (a)The operation area varies depending on the user, how the transmitter is held, and the position.
      (b)In some places, the operation area is reduced due to the vehicle shape or surrounding environment.
      (c)The low power radio wave signals of the transmitter may be affected by surrounding noises or other strong radio waves. The operation area of the transmitter may be shortened or the transmitter may not work.
      (d)If the battery charge lowers, the operation area may be reduced or the transmitter may not function.
      NOTE:
      If the transmitter is left under direct sunlight for a long time, for example, being left on the meter panel, the battery charge level may decrease or other troubles may occur.
2. Inspecting wireless door lock control function
   NOTE:
   • The switches indicated below transmit signals. They are integrated in the door control transmitter.
   • Pay attention to the operation area of the transmitter during inspection.
   (1) Check that the vehicle wireless function is in an operable state. (Refer above)
   (2) Inspect the basic functions.
      (a)Check that all doors are locked when the lock switch is pressed.

(b) Check that the driver's door is unlocked when the unlock switch is pressed once and all other doors are unlocked when the switch is pressed once more within 3 seconds.
(c) Check that the trunk opens when the trunk open switch is held down for 1.6 seconds or more.

(3) Check the chattering prevention function.
(a) Check that the relevant operation takes place once only when the switch is pressed. Check that the relevant operation takes place once only, not consecutively, when the switch is pressed. Check that the relevant operation takes place once whenever the switch is pressed at 1 second intervals.

(4) Check the auto lock function.
(a) Check that all doors are automatically locked if no door is opened or locked within 60 seconds after all doors are unlocked by pressing the unlock switch.

(5) Check the switch operation false recognition prevention function.
(a) Check that doors are not locked by a lock switch when the key is set in the ignition cylinder. The above does not apply if the system is in the recognition code registration mode.

(6) Check the door open warning function.
(a) Check that the wireless door lock buzzer sounds continuously for 5 seconds when the lock switch is pressed while a door is open or not closed properly.

(7) Check the answer-back function (hazard warning lights flashing).
(a) Check that the hazard warning light flashes once and all doors are locked when the lock switch is pressed.
(b) Check that the hazard warning light flashes twice and the doors are unlocked when the unlock switch is pressed.

(8) Check the answer-back (wireless door lock buzzer) function.
(a) Check that the buzzer sounds once and all doors are locked simultaneously when the lock switch is pressed.
(b) Check that the buzzer sounds twice and the driver's door is unlocked simultaneously when the unlock switch is pressed.

(9) Check the panic alarm control function.
(a) Check that the horn sounds for 60 seconds, the headlight and tail light flash, and the room light illuminates (if the light switch is set to the door position) when the panic switch is held down for 0.8 seconds or more. Check that the horn stops and the lights stop flashing when any switch of the transmitter is pressed.

(10) Check the vehicle position sensor function.
(a) If the following conditions are met three times within 5 seconds, the vehicle position sensor function sounds the horn once and flashes the hazard warning light three times.
- IG SW OFF
- Key is inserted in ignition key cylinder.
- All doors and trunk are closed.
- All doors are locked.
- Door control transmitter lock switch is pressed.

(11) Check the entry illumination function.
(a) Check that the map light illuminates (if the light switch is set to the door position) and the doors are unlocked when the unlock switch is pressed with all doors locked.

customize function

1. Customization of wireless door lock control system

(1) Customization via SSM4

CAUTION:
- When a customer requests a function change, check if the function is customizable.
- Before starting customization, record the current settings.
- Before performing the troubleshooting procedure for a function, check that the function is set to the initial settings.

NOTE:

Some items may not be displayed depending on the destination and equipment.

(a) Connect the SSM4 to the DLC3.
(b) Turn IG SW to ON.
(c) Turn on the SSM4.
(d) Enter the following menu. [Body Control] →[Customize]
(e) Referring to the table below, perform settings.

Wireless door lock

Display	Initial setting	Function	Setting	Controller ECM
[Keyless Control]	Yes	Settings for the function that allows you to select to lock the door via operation of the electrical key transmitter SUB-ASSY (Electronic key)	Yes or No	Main body ECM (multiplex network body ECM)
[Wireless Buzzer Resp]	ON	Wireless door lock buzzer response	OFF or ON	Main body ECM (multiplex network body ECM)
[Hazard Answer Back]	ON	When the wireless lock switch of the transmitter is pressed, all hazard warning lights are illuminated simultaneously. All hazard warning lights illuminate twice when the unlock switch is pressed.	OFF or ON	Main body ECM (multiplex network body ECM)
[Open Door Warning]	ON	The buzzer sounds when the lock is pressed while any door is open.	OFF or ON	Main body ECM (multiplex network body ECM)
[Unloocking operation]	Yes	Settings for the function where all doors are unlocked when the electrical key transmitter SUB-ASSY (Electronic key) is operated twice	Yes or No	Main body ECM (multiplex network body ECM)
[Panic Alarm Function]	ON	Function to activate the anti-theft system when the panic switch of door control transmitter module set SUB-ASSY is held down for 0.8 seconds or more.	OFF or ON	Main body ECM (multiplex network body ECM)
[Wireless Auto Lock]	ON	This function turns ON or OFF the wireless auto lock function.	OFF or ON	Main body ECM (multiplex network body ECM)
[Auto Lock Time]	60 seconds	Time from unlock to relock using wireless door lock function	30 seconds, 60 seconds, 120 seconds	Main body ECM (multiplex network body ECM)
[Trunk lid unlocking operation]	Long press(short)	Settings for the method of operation when opening the trunk with the electrical key transmitter SUBASSY (Electronic key)	single press/2 times ON/Long press(short)/ Long press(long)	Main body ECM (multiplex network body ECM)
[Wireless Buzzer Volume]	Level 5	Wireless door lock buzzer volume	Level 7, Level 6, Level 5,Level 4, Level 3, Level 2, Level 1, or Level 0	Main body ECM (multiplex network body ECM)

DL

Symptom table

NOTE:

- Use the following table to identify the cause of the symptom. If multiple areas are listed as the causes, they are indicated in the [Faulty part] column according to the order of probability of causing the symptom. Check the possible causal areas in the list order and confirm each symptom. Replace faulty parts as necessary.
- Before inspecting the areas listed in "Possible cause" below, check the fuses and the relays related to this system.

Wireless door lock control

Symptoms	Faulty part	Reference pages
Only wireless control function does not work	Proceed to "Only wireless control function does not work"	DL - 63
Only answer-back function does not operate properly	Refer to "No answer-back"	DL - 78
Auto lock function does not operate properly	Perform operation check	DL - 50
	Wiring harness or connector	-
	Unlock warning switch circuit	DL - 98
	Door courtesy light switch circuit	LI - 25
	Main body ECM (multiplex network body ECM)	-
	Instrument panel junction block ASSY	-
Illumination entry function does not operate	Perform operation check	DL - 50
	Wiring harness or connector	-
	Lighting system	LI - 3
	Main body ECM (multiplex network body ECM)	-
	Instrument panel junction block ASSY	-
Only door open warning function does not operate	Perform operation check	DL - 50
	Door courtesy light switch circuit	LI - 25
	Main body ECM (multiplex network body ECM)	-
	Instrument panel junction block ASSY	-

Symptoms	Faulty part	Reference pages
Only panic alarm function does not operate	Perform operation check	DL - 50
	Lighting system (interior) (room light)	LI - 40
	Lighting system (exterior) (headlight, tail light, hazard light)	-
	Horn system	HO - 6
	Wiring harness or connector (Vehicle horn - Main body ECM (multiplex network body computer))	-
	Main body ECM (multiplex network body ECM)	-
	Instrument panel junction block ASSY	-
Only trunk open function does not operate	Perform operation check	DL - 50
	Wiring harness or connector	-
	Door control transmitter module set SUB ASSY	-
	Main body ECM (multiplex network body ECM)	-

ECM terminal arrangement

1. Check the instrument panel junction block ASSY and main body ECM (multiplex network body ECM).

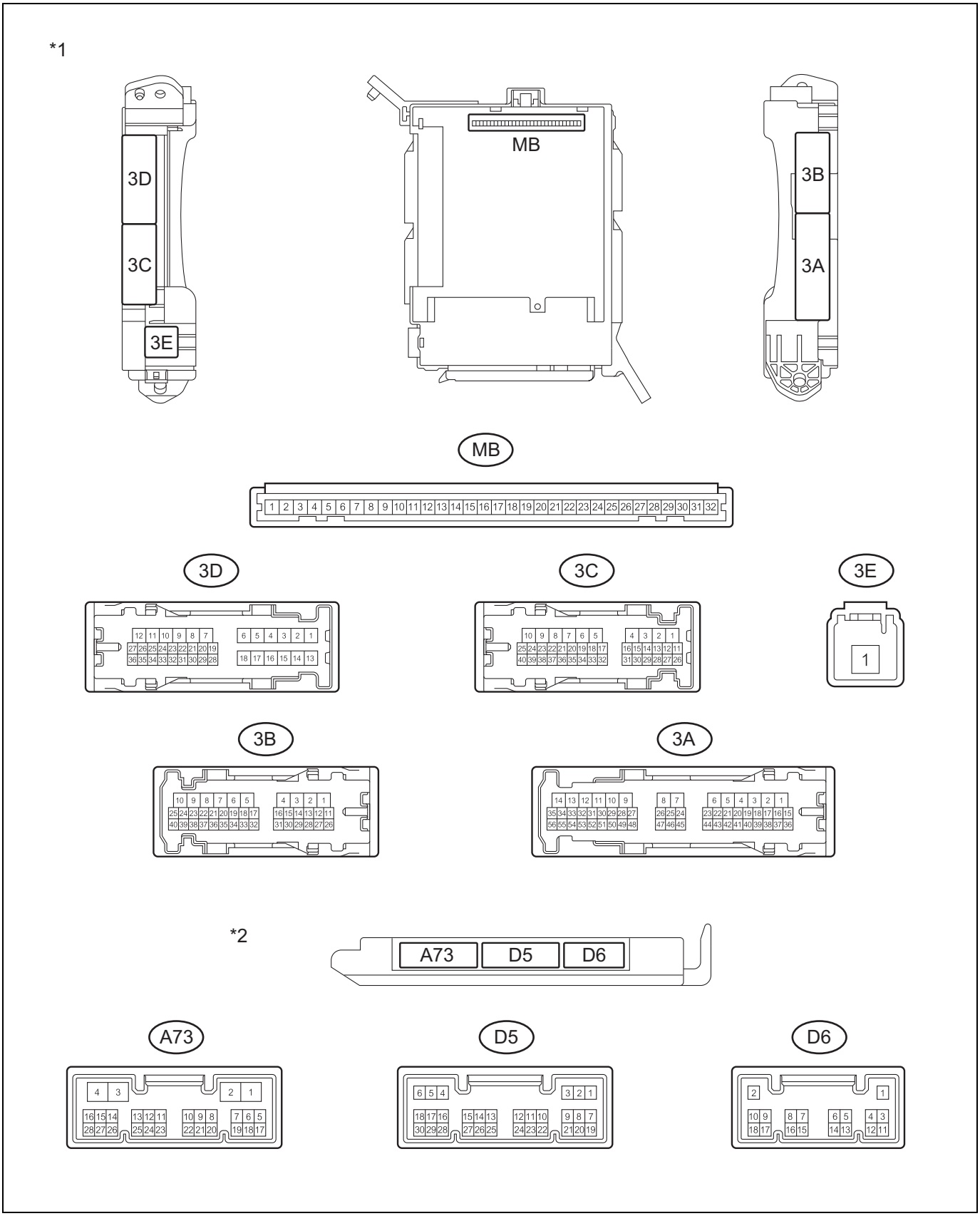

Captions in illustration

*1	Instrument panel junction block ASSY	*2	Main body ECM (multiplex network body ECM)

(1) Remove the main body ECM (multiplex network body ECM) from the instrument panel junction block ASSY.

(2) Disconnect the connectors D5, D6, and A73 of the main body ECM (multiplex network body ECM).
(3) Measure the resistance and voltage at the terminals between the wiring harness side connector and a chassis ground.

Terminal No. (symbol)	Terminal description	Conditions	Specified condition
MB-1 - chassis ground	Battery power supply	Always	11 to 14V
MB-8 - chassis ground	IG SW power supply	IG SW ON	11 to 14V
		IG SW OFF	1 V or less
MB-9 - Chassis ground	ACC power supply	IG SW ACC	11 to 14V
		IG SW OFF	1 V or less
MB-11 - chassis ground	Ground	Always	1 Ωor less
MB-32 - chassis ground	Battery power supply	Always	11 to 14V
D5-22 - chassis ground	Unlock warning switch input	Key is not inserted in ignition key cylinder (OFF)	1 V or less
		Key is inserted to the ignition key cylinder (ON).	11 to 14V
D6-1 - Chassis ground	Ground	Always	1 Ωor less
A73-4 - chassis ground	Ground	Always	1 Ωor less

(4) Reconnect the connector D5, D6, and A73 of the main body ECM (multiplex network body ECM).
(5) Install the main body ECM (multiplex network body ECM) to the instrument panel junction block ASSY.
(6) Measure the voltages and resistances according to the values indicated in the table below.

DL

Terminal No. (symbol)	Terminal description	Conditions	Specified condition
3A-28 - chassis ground	Driver's side courtesy light switch	Driver's door is open.	1 V or less
		Driver's door is closed	Pulse generation
3B-13 - chassis ground	Passenger's side courtesy light switch	The passenger's door is open.	1 V or less
		The passenger's door is closed.	Pulse generation
3D-26 - chassis ground	Trunk courtesy light switch	The trunk is open.	1 V or less
		The trunk is closed.	11 to 14V
3B-2 - chassis ground	Door lock motor lock drive output (driver's side)	Door control switch is not pressed	1 V or less
		Lock side of door control switch is not pressed	11 to 14V
3B-3 - chassis ground	Door lock motor lock drive output (passenger's side)	Door control switch is not pressed	1 V or less
		Lock side of door control switch is not pressed	11 to 14V
3D-11 - chassis ground	Door lock motor unlock drive output (driver's side)	Door control switch is not pressed	1 V or less
		Unlock side of door control switch is not pressed	11 to 14V
3B-4 - chassis ground	Door lock motor unlock drive output (passenger's side)	Door control switch is not pressed	1 V or less
		Unlock side of door control switch is not pressed	11 to 14V
A73-1 - chassis ground	Wireless door lock buzzer signal	Wireless door lock buzzer OFF	1 V or less
		Wireless door lock buzzer ON	Pulse generation
D6-6 - chassis ground	Output signals to door control receiver	Key is inserted in ignition key cylinder →Key is removed from ignition key cylinder	11 to 14 V →Pulse generation →11 to 14 V
D6-7 - Chassis ground	Input signals from door control receiver	Ignition switch is OFF, all doors are closed, no transmitter switch is pressed	11 to 14V
		Ignition switch is OFF, all doors are closed, transmitter switch is pressed	Pulse generation

2. CHECK DOOR CONTROL RECEIVER (without TPMS)

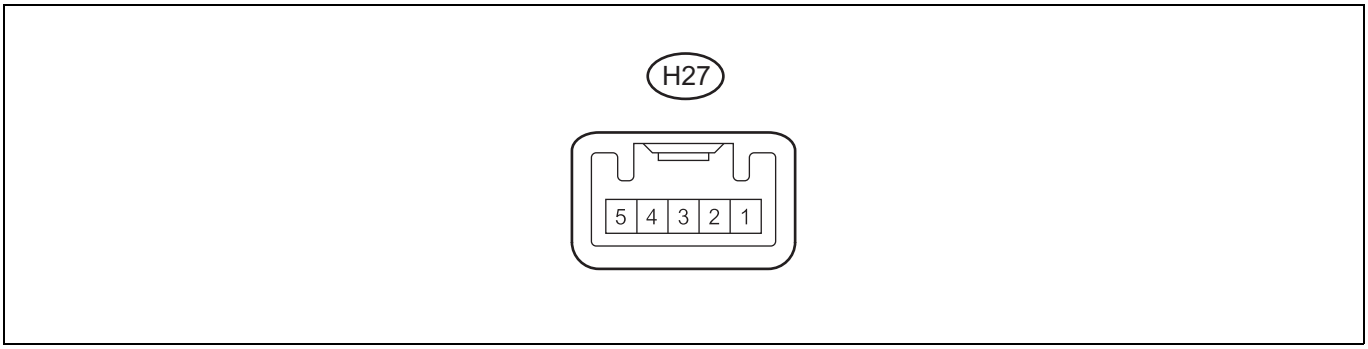

(1) Disconnect the H27 door control receiver connector.
(2) Measure the resistance and voltage according to the value(s) in the table below.

Terminal No. (Symbol)	Terminal Description	Condition	Specified Condition
H27-5 - Body ground	Battery power supply	Always	11 to 14 V
H27-1 - Body ground	Ground	Always	Below 1Ω

DL

(3) Reconnect the H27 door control receiver connector.
(4) Measure the voltage according to the value(s) in the table below.

Terminal No. (Symbol)	Terminal Description	Condition	Specified Condition
H27-3 - Body ground	Signal input from main body ECU (multiplex network body ECU)	Key inserted in ignition key cylinder →Key pulled out of ignition key cylinder	11 to 14 V →Pulse generation →11 to 14 V
H27-2 - Body ground	Signal output to main body ECU (multiplex network body ECU)	Ignition switch off, all doors closed and door control transmitter switch not pressed	11 to 14 V
		Ignition switch off, all doors closed and door control transmitter switch pressed	Pulse generation

3. Inspect the door control receiver (with TPMS).

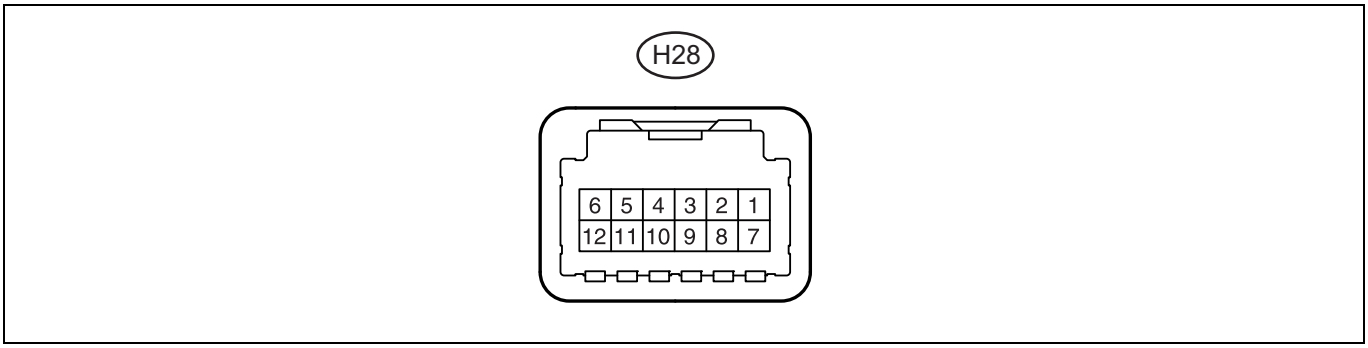

(1) Disconnect the door control receiver connector H28.
(2) Measure the resistance and voltage based on the following table.

Terminal No. (symbol)	Terminal description	Conditions	Specified condition
H28-1 - Chassis ground	IG SW power supply	IG SW ON	11 to 14V
		IG SW OFF	1 V or less
H28-7 - chassis ground	Battery power supply	Always	11 to 14V
H28-12 - chassis ground	Ground	Always	1 Ωor less

(3) Reconnect the door control receiver connector H28.
(4) Measure the voltage according to the following table.

Terminal No. (symbol)	Terminal description	Conditions	Specified condition
H28-5 - chassis ground	Input signals from main body ECM (multiplex network body computer)	Key is inserted in ignition key cylinder →Key is removed from ignition key cylinder	11 to 14 V →Pulse generation →11 to 14 V

Terminal No. (symbol)	Terminal description	Conditions	Specified condition
H28-4 - chassis ground	Output signals to main body ECM (multiplex network body computer)	Ignition switch is OFF, all doors are closed, no door control transmitter switch is pressed	11 to 14V
		Ignition switch is OFF, all doors are closed, door control transmitter switch is pressed	Pulse generation

Checking / clearing diagnostic codes

1. DTC check
   (1) Check DTC
      (a)Connect the SSM4 to the DLC3.
      (b)Turn IG SW to ON.
      (c)Turn on the SSM4.
      (d)Enter the following menu. [Body Control] →[DTC]
      (e)Check the DTC.
   (2) Clear DTC
      (a)Connect the SSM4 to the DLC3.
      (b)Turn IG SW to ON.
      (c)Turn on the SSM4.
      (d)Input the following menus: [Body Control] →[Clear Memory]
      (e)Clear DTC according to the following instructions displayed on the SSM4 screen.

Data monitor / active test

1. Read data list
   CAUTION:
   The values indicated under the normal conditions in the table below are informative values. Do not depend on reference value only when judging if the part is faulty.
   NOTE:
   By using the SSM4 for reading the data list, it is able to read the values and the status of the switches, sensors, or actuators without removing these parts. This inspection is very useful because it allows an operator to read any intermittent conditions or signals without disturbing parts or wiring. Diagnostic time can be saved by reading the data monitor information at the initial stage of the troubleshooting.
   (1) Connect the SSM4 to the DLC3.
   (2) Turn IG SW to ON.
   (3) Turn on the SSM4.
   (4) Enter the following menu. [Body Control] →[Data monitor]
   (5) Using SSM4, read the data list according to the screen displays.

Main body ECM

Tester display	Measurement items / range	Normal condition	Notes for diagnosis
[D Door Courtesy]	Driver's door courtesy light switch signal / ON or OFF	ON: Driver's door is open OFF: Driver's door is closed	-
[P Door Courtesy]	Passenger's door courtesy light switch signal / ON or OFF	ON: Passenger's door is open OFF: Passenger's door is closed	-
[Luggage Courtesy SW]	Trunk courtesy switch signal / OFF or ON	ON: The trunk is open. OFF: The trunk is closed	-
[Ignition]	Ignition switch IG signal / ON or OFF	ON:IG SW ON OFF:IG SW OFF	-
[ACC SW]	Ignition switch ACC signal / ON or OFF	ON:IG SW ACC OFF:IG SW OFF	-
[Key Unlock Warning SW]	Unlock warning switch / OFF or ON	OFF: Ignition key is not inserted ON: Ignition key is inserted	-
[Keyless Control]	Yes or No	Customized setting display	-
[Wireless Buzzer Resp]	Wireless buzzer response / OFF or ON	Customized setting display	-
[Hazard Answer Back]	Wireless hazard answer-back / OFF or ON	Customized setting display	-
[Open Door Warning]	Open door warning / OFF or ON	Customized setting display	-
[Unloocking operation]	Yes or No	Customized setting display	-

Tester display	Measurement items / range	Normal condition	Notes for diagnosis
[Panic Alarm Function]	Panic function / OFF or ON	Customized setting display	-
[Wireless Auto Lock]	Auto lock function / OFF or ON	Customized setting display	-
[Auto Lock Time]	Auto look time /30 seconds, 60 seconds, 120 seconds	Customized setting display	-
[Trunk lid unlocking operation]	single press / 2times ON / Long press (short) / Long press (long)	Customized setting display	-
[Wireless Buzzer Volume]	Wireless door lock buzzer vol/ Level7, Level6, Level5, Level4, Level3, Level2, Level1, or Level0	Customized setting display	-

2. Implementation of active test

NOTE:

If SSM4 is used when performing active test, the relay, VSV, actuator etc. can be operated without removing parts. This functional inspection method is very useful because it helps check state-related signals and identify the faulty part without removing any parts and wiring. By performing active tests at an initial phase of troubleshooting, you can save time for diagnosis. The data monitor information can be displayed during active test.

(1) Connect the SSM4 to the DLC3.
(2) Turn IG SW to ON.
(3) Turn on the SSM4.
(4) Enter the following menu. [Body Control] →[Active Test]
(5) Follow the SSM4 on-screen instructions to perform an active test.

Main body

Tester display	Tested parts	Control range	Notes for diagnosis
[Door Lock]	Door lock motor	[Lock]/[Unlock]	-
[D-Door Unlock]	Driver's door lock motor	OFF/ON	-
[Trunk and Back-Door Open]	Trunk lock motor	OFF/ON	-
[Illuminated Entry System]	Room light (room light switch is set to door position and all doors are closed)	OFF/ON	-
[Keyless Buzzer Output]	Wireless door lock buzzer	OFF/ON	-

List of diagnostic codes

Diagnostic codes	Detection item	Faulty part	Reference pages
B1242	[Wireless Door Lock Tuner Circuit]	Wiring harness or connector Door control receiver Main body ECM (multiplex network body ECM)	DL - 58

DTC B1242 Malfunctions in wireless tuner system (without TPMS)

Circuit description

The door control receiver receives signals from the door control transmitter and transmits them to the main body ECM (network gateway computer) by solid line. The main body ECM (network gateway computer) transmits the door lock and unlock signals to each door lock actuator to control them.

DTC NO.	DTC detecting condition	Inspection parts
B1242	If, after the main body ECM (network gateway computer) outputs a PRG signal in the self diagnosis mode, the corresponding RDA signal cannot be received within 1 second	• Door control receiver • Main body ECM (network gateway computer) • Wiring harness or connector

Circuit figure

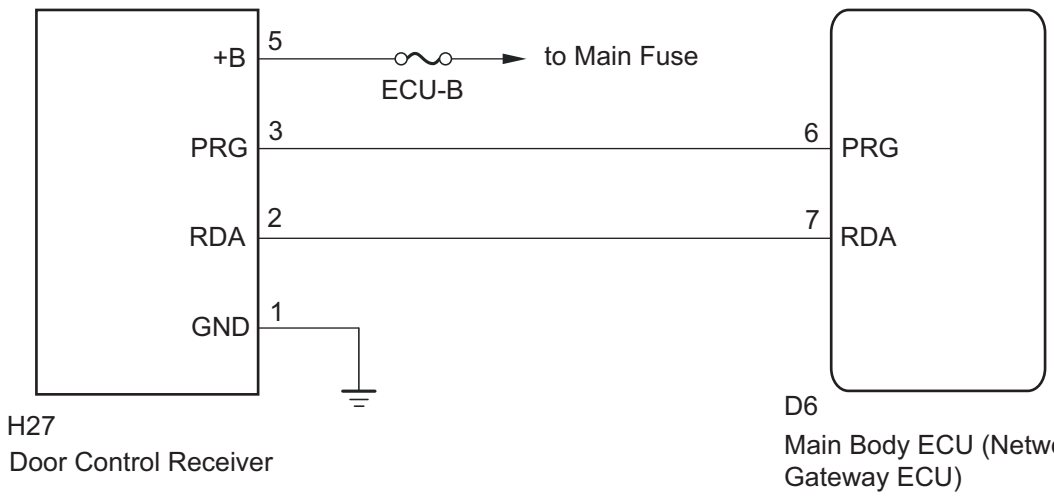

Inspection steps

CAUTION:

Before performing the troubleshooting, check the fuse of this circuit.

1	Inspection of wiring harness and connector (Door control receiver - Main body ECM (network gateway computer))

(1) Disconnect the door control receiver connector H27.
(2) Disconnect the connector D6 for the main body ECM (network gateway computer).
(3) Measure the resistance between the terminals.

Resistance (open circuit check)

Inspection terminals	Inspection conditions	Standard value
H27-2 (RDA) - D6-7 (RDA)	Always	Less than 1 Ω
H27-3 (PRG) - D6-6 (PRG)	Always	Less than 1 Ω

Resistance (open circuit check)

Inspection terminals	Inspection conditions	Standard value
H27-2 (RDA) - Chassis ground	Always	10 kΩ or more
H27-3 (PRG) - Chassis ground	Always	10 kΩ or more

NG → Repair or replacement of wiring harness or connector

OK

2	Door control receiver inspection (power, GND)

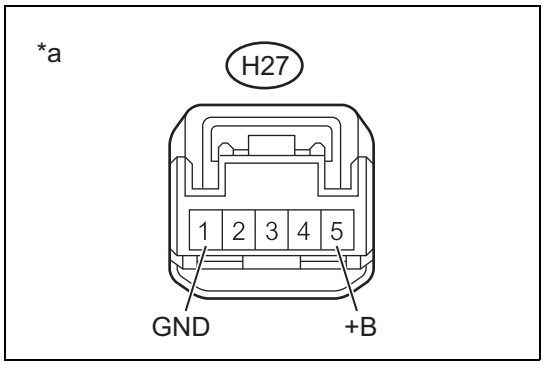

(1) Measure the voltage and resistance between terminals.
Voltage

Inspection terminals	Inspection conditions	Standard value
H27-5 (+B) - Chassis ground	Always	11 to 14 V

Resistance

Inspection terminals	Inspection conditions	Standard value
H27-1 (GND) - Chassis ground	Always	Less than 1 Ω

Captions in illustration

*a	Front side of vehicle wiring harness connector (Door control receiver connector)

DL

NG → Repair or replacement of wiring harness or connector

OK

3	Replacement with normal door control receiver

(1) Replace with a new or normal door control receiver. (Refer to DL - 111)

Next

4	Identification code registration

(1) Register the identification code to the door control receiver. (Refer to DL - 97)

Next

5	Clear diagnostic code

(1) Clear the diagnostic code using the SSM4. (Refer to DL - 57)

Next

6	Do a DTC check again.

(1) Check DTC using SSM4. (Refer to DL - 57)
Criteria: B1242 is not output

NG → Replacement of the main body ECM (network gateway computer) (Refer to PD - 25)

OK

Complete (door control receiver trouble)

DTC	B1242	Malfunctions in wireless tuner system (with TPMS)

Circuit description

The door control receiver receives signals from the transmitter and transmits them to the main body ECM (multiplex network body computer).

DTC NO.	DTC detecting condition	Inspection parts
B1242	In the diagnosis mode, the applicable RDA signal can not be received during the period of 1 second in which the PRG signal is output from the main body ECM (multiplex network body computer).	• Wiring harness or connector • Door control receiver • Main body ECM (multiplex network body ECM)

Circuit figure

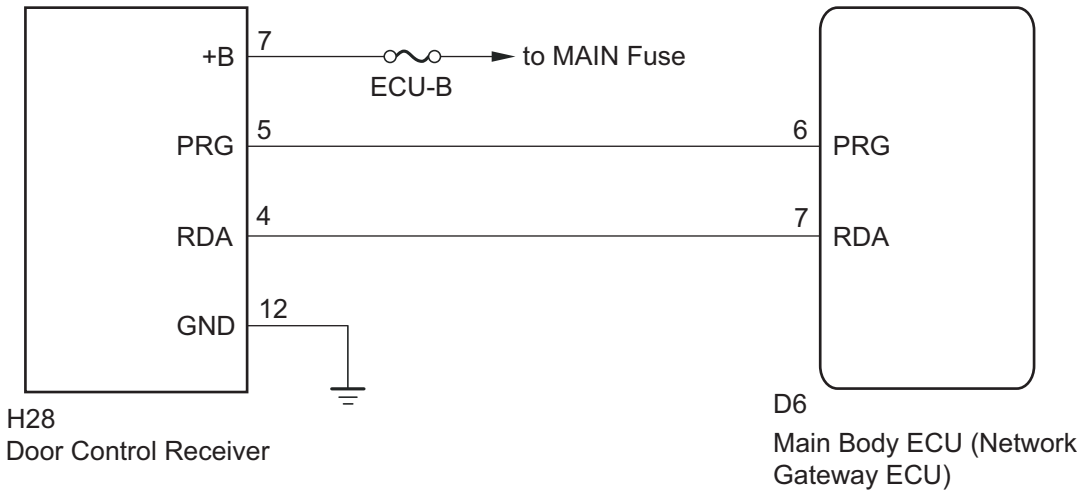

DL

Inspection steps

CAUTION:

Before performing the following inspection steps, check the fuses related to this system.

1	Inspecting wiring harness and connector (main body ECM - door control receiver)

(1) Disconnect the main body ECM (multiplex network body computer) connector D6.

(2) Disconnect the door control receiver connector H28.

(3) Measure the resistance according to the following table.

Resistance

Inspection terminals	Inspection conditions	Standard value
D6-6 - H28-5	Always	1 Ωor less
D6-7 - H28-4	Always	1 Ωor less
D6-6 - Chassis ground	Always	10 kΩ or more
D6-7 - chassis ground	Always	10 kΩ or more

NG → Repair or replacement of wiring harness or connector

OK

2	Inspect door control receiver (power, GND)

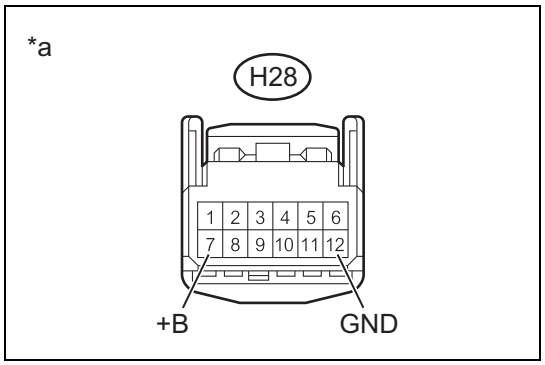

(1) Measure the voltage and resistance according to the following table.
Voltage

Inspection terminals	Inspection conditions	Standard value
H28-7 - chassis ground	Always	11 to 14V

Resistance

Inspection terminals	Inspection conditions	Standard value
H28-12 - chassis ground	Always	1 Ωor less

Captions in illustration

*a	Front side of vehicle wiring harness connector (To door control receiver)

NG → Repair or replacement of wiring harness or connector

OK

3	Replacing the door control receiver

(1) Temporarily replace the door control receiver with a new or normally functioning one. (Refer to DL - 111)

Next

4	Register the recognition code

(1) Execute the registration procedure. (Refer to DL - 97)
NOTE:
If a new or normally functioning door control receiver is available, connect it and check if the wireless door lock function is normal or DTC is output. If the substitute receiver functions properly, replace the original door control receiver.

Next

5	Clear diagnostic code

(1) Clear the diagnostic code. (Refer to DL - 57)

Next

6	DTC check

(1) Check each DTC. (Refer to DL - 57)
Criteria: DTC is not output.

NOTE:
Reconnect and assemble the sensors and connectors to restore the vehicle before rechecking DTC.

NG → Replacement of Main body ECM

OK

Complete (door control receiver trouble)

Only wireless function does not work (without TPMS)

Circuit description
The door control receiver receives signals from the door control transmitter and transmits them to the main body ECM (network gateway computer) by UART communication. The main body ECM (network gateway computer) transmits the door lock and unlock signals to each door lock actuator to control them.

Circuit figure

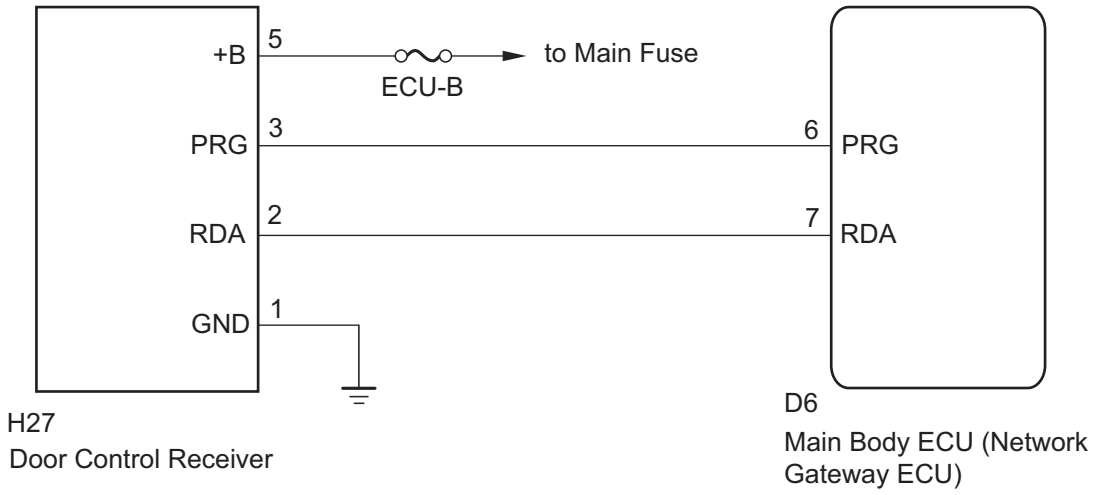

Inspection steps
CAUTION:
Before performing the troubleshooting, check the fuse of this circuit.

1	Electric door lock system inspection

(1) Check if the door lock performs a lock ←→unlock operation when operating the door control switch of the power window regulator master switch ASSY.

Result

Result	Go to
If door lock operates properly	A

Result	Go to
If door lock does not operate properly	B

B → To "Electric door lock system (Symptom table)" (Refer to DL - 9)

A

2	Key warning sound check

(1) Check to ensure that the key warning buzzer properly operates. (Refer to DL - 86)

Result

Result	Go to
If key warning buzzer properly operates	A
If key warning buzzer does not operate properly	B

NOTE:
Check if the unlock warning switch circuit is normal.

B → To "Key warning system (Symptom table)" (Refer to DL - 86)

A

3	Transfer to self diagnosis mode

(1) Turn the ignition switch to OFF.
(2) Connect the SSM4 to the DLC3.
(3) Turn the ignition switch to ON.
(4) Use SSM4 to select [Each System Check] →[Body Control] →[Active Test].
NOTE:
- If a completion request is issued from SSM4, the system shifts to the normal mode.
- During the self diagnosis mode, no lock and unlock operations take place.

(5) Check that the system has transferred to the wireless diagnosis mode by monitoring the response output of room light illumination.
NOTE:
Check with the room light switch set to the "DOOR" position.

Interior Light Output:

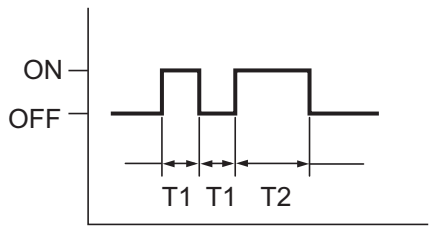

T1: 0.25 seconds
T2: 0.5 seconds

Next

4	Check by self diagnosis mode

(1) Check the diagnosis output when holding down the door control transmitter switch continuously.
NOTE:
Check the diagnosis output by the room light output.

Interior Light and Wireless Door Lock Buzzer*1 Output:

Normal Wave

(LOCK / UNLOCK / TRUNK OPEN / PANIC*2 Switch):

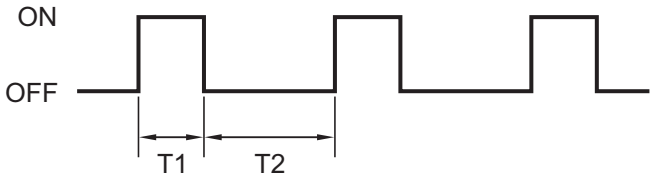

T1: 0.25 seconds (Interior Light)

0.125 seconds (Wireless Door Lock Buzzer)*1

T2: 0.5 seconds (Interior Light)

0.25 seconds (Wireless Door Lock Buzzer)*1

*1: w/ Wireless Door Lock Buzzer Answer-back Function

Unmatching Recognition Code:

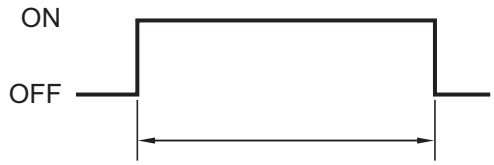

Wave is being received

No Diagnostic Output:



*2: w/ Panic Alarm Control Function

SL-02225

Result

Result	Go to
Normal radio wave is received	A
Identification code not matched	B
No diagnosis output	C

B	Go to Step 5.
C	Go to Step 6.

A

Replacement of the main body ECM (network gateway computer) (Refer to PD - 25)

5	Identification code registration

(1) Check that the registration rewrite mode or addition mode can be entered and a code can be registered. (For identification code registration, refer to DL - 97)

NG → Replacement of door control transmitter module set (Refer to DL - 96)

OK

Complete (Perform function check)

6	Check by self diagnosis mode

(1) Check if the diagnosis result of unmatched identification code is output when continuously holding down the switch of a new or normal door control transmitter for a vehicle of the same model.

Result

Result	Go to
Output	A
Not output	B

B → Go to Step 10.

A

7	Check of transmitter battery voltage

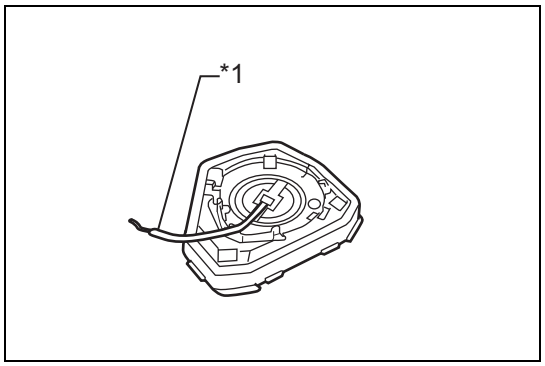

(1) Remove the battery from the inoperative door control transmitter and attach a lead wire (0.6 mm or less including insulator) to the negative terminal using an adhesive tape.
NOTE:
Do not wind the lead wire around the terminal, pinch it, or solder it. The terminal may be deformed or damaged, and the battery may no longer fit into the transmitter.

Captions in illustration

*1	Lead wire

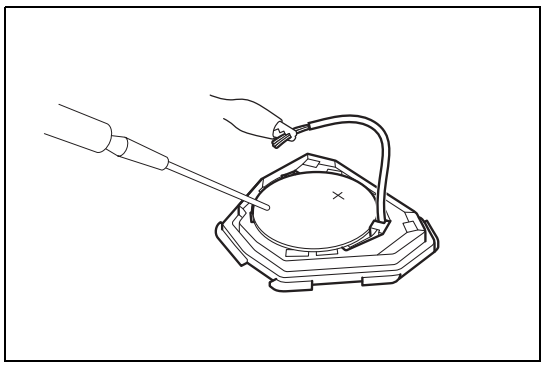

(2) While ensuring that the lead wire is pulled out from the position shown in the figure, check the voltage of the transmitter battery that has been removed.
NOTE:
When measuring the battery voltage, identify the lowest voltage while operating either the lock or unlock switch of the door control transmitter.

Voltage

Inspection terminals	Inspection conditions	Standard value
Transmitter battery positive - Transmitter battery negative	Always	2.5 to 3.2 V

NG → Go to Step 8.

OK

Replacement of door control transmitter module set (Refer to DL - 96)

8 Transmitter battery replacement

Replace the transmitter battery with a new part. (Refer to DL - 94)

Next

9 Check by self diagnosis mode

(1) Check the diagnosis output when holding down the door control transmitter switch continuously.

Result

Result	Go to
Normal radio wave is received	A
Unmatching identification code or no diagnosis result	B

B → Replacement of door control transmitter module set (Refer to DL - 96)

A

Complete (transmitter battery trouble)

10 Radio wave environment check

(1) Bring the door control transmitter close to the door control receiver. Check the operation by performing wireless operations. (For the door control receiver position, refer to DL - 43)
NOTE:
The door control receiver located close to the door control receiver is less susceptible to external radio waves. Therefore, you can check if the symptom is caused by external radio waves.

Result

Result	Go to
If wireless function does not operate properly	A
If wireless function operates properly	B

NOTE:
If the operation is found normal by the check result, it is possible that the symptom is caused by external radio waves and the output reduction of the door control transmitter. (If the system does not operate only in a particular place or time zone, it is possible that the symptom is caused by external radio waves.) In addition, because there is possibility that the system is affected by external radio waves from dealer installed parts, remove such parts if any before checking the operation.

B → Influence by external radio wave (inside/outside vehicle)

A

11	Door control receiver inspection (power, GND)

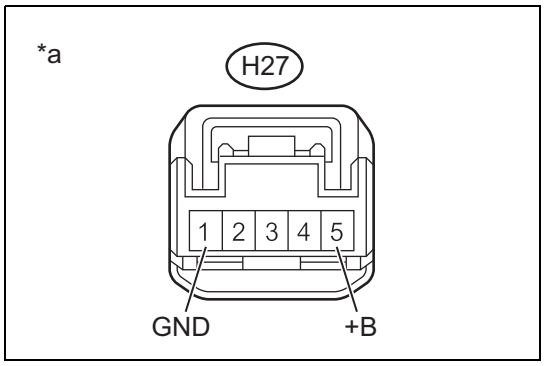

(1) Disconnect the door control receiver connector H27.
(2) Measure the voltage and resistance between terminals.

Voltage

Inspection terminals	Inspection conditions	Standard value
H27-5 (+B) - Chassis ground	Always	11 to 14 V

Resistance

Inspection terminals	Inspection conditions	Standard value
H27-1 (GND) - Chassis ground	Always	Less than 1 Ω

Captions in illustration

*a	Front side of vehicle wiring harness connector (Door control receiver connector)

NG → Repair or replacement of wiring harness or connector

OK

12	Door control receiver inspection (output)

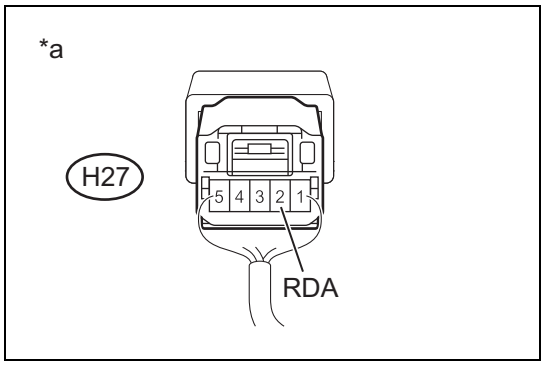

(1) Measure the voltage between the terminals.

(2) Using an oscilloscope, measure the waveform between terminals.
Voltage

Inspection terminals	Inspection conditions	Standard value
H27-2 (RDA) - Chassis ground	IG OFF, no key in ignition key cylinder, all doors closed, door control transmitter lock or unlock switch not pressed	11 to 14V
	IG OFF, no key in ignition key cylinder, all doors closed, door control transmitter lock or unlock switch pressed	Pulse generation

Captions in illustration

*a	Connector connected (Door control receiver)

NG → Door control receiver replacement (Refer to DL - 111)

OK

13	Inspection of wiring harness and connector (Door control receiver - Main body ECM (network gateway computer))

(1) Disconnect the connector D6 for the main body ECM (network gateway computer).
(2) Measure the resistance between the terminals.

Resistance (open circuit check)

Inspection terminals	Inspection conditions	Standard value
H27-2 (RDA) - D6-7 (RDA)	Always	Less than 1 Ω
H27-3 (PRG) - D6-6 (PRG)	Always	Less than 1 Ω

Resistance (shortcircuit check)

Inspection terminals	Inspection conditions	Standard value
H27-2 (RDA) - Chassis ground	Always	10 kΩ or more
H27-3 (PRG) - Chassis ground	Always	10 kΩ or more

NG → Repair or replacement of wiring harness or connector

OK

14	Replacement with normal door control receiver

(1) Replace with a new or normal door control receiver. (Refer to DL - 111)

Next

15	Identification code registration

(1) Check that the registration rewrite mode or addition mode can be entered and a code can be registered. (For identification code registration, refer to DL - 97)

NG → Replacement of the main body ECM (network gateway computer) (Refer to PD - 25)

OK

Complete (door control receiver trouble)

Only wireless function does not work (with TPMS)

Circuit description

The door control receiver receives signals from the transmitter and transmits them to the main body ECM (multiplex network body computer). The main body ECM (multiplex network body computer) controls all doors by transmitting lock and unlock signals to each door.

Circuit figure

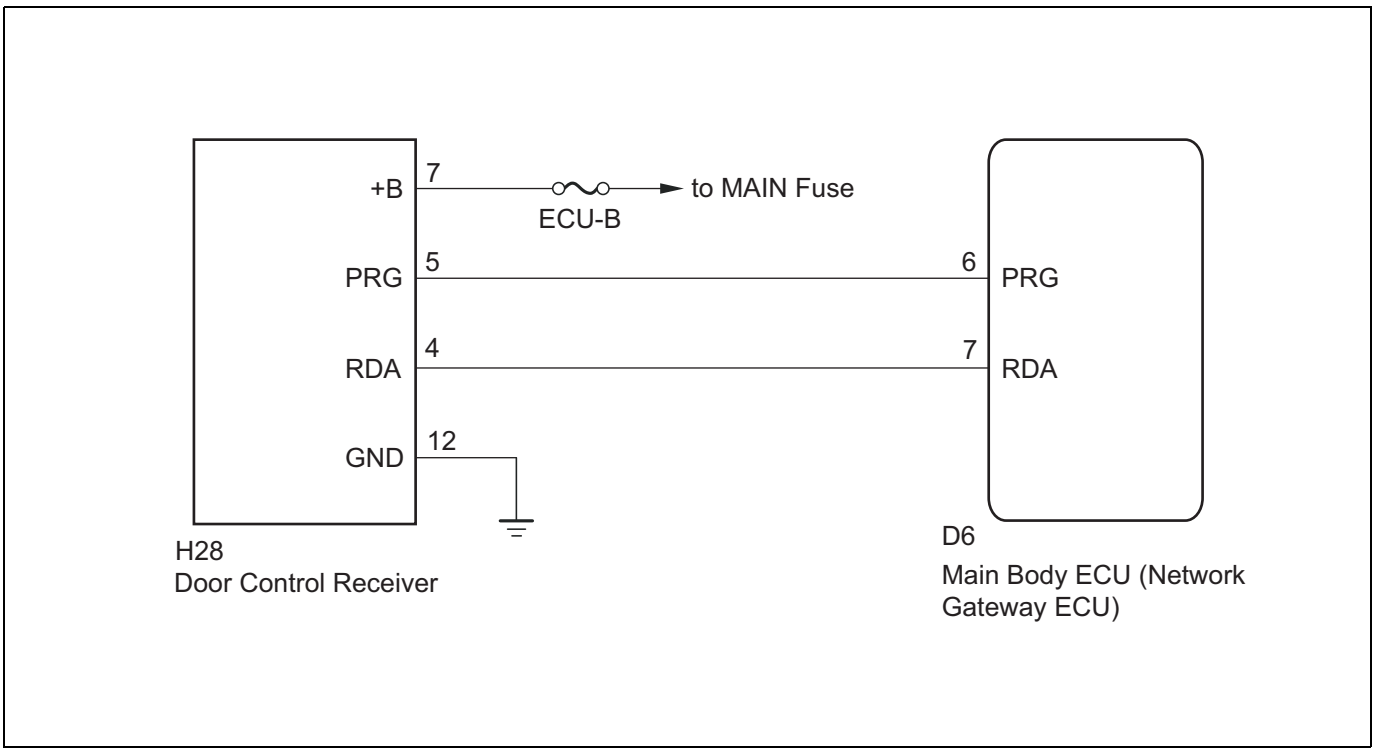

DL

Inspection steps

CAUTION:

Before performing the following inspection steps, check the fuses related to this system.

1	Check the power door lock operation.

(1) Check if the locked door is unlocked when operating the door control switch of the power window regulator master switch ASSY. (Refer to DL - 7)

Criteria: Locked door is unlocked

NG → Refer to the power door lock control system (refer to DL - 7)

OK

2	Inspection of key warning system

(1) Check that the key warning buzzer operates properly. (Refer to DL - 85)

Criteria: The key warning buzzer operates properly

NG → To key warning system (Refer to DL - 85)

OK

3	Transfer to self diagnosis mode

(1) Transfer to the self diagnosis mode by operating the ignition key cylinder.
  (a) Insert the key in the ignition key cylinder and remove it.
  (b) Insert the key in the ignition key cylinder within 5 seconds after removing it, and turn the ignition switch from ON to OFF once. (End at OFF)
  (c) Within 30 seconds after turning the ignition switch to OFF, perform the following step nine times: Turn ignition switch to ON, then OFF. (End at OFF)
  (d) Enter the following menus: Body / Main Body / Utility / Wireless Door Lock Diagnosis Mode
  CAUTION:
  If the transfer to self diagnosis mode fails, the system returns to the normal mode.
  NOTE:
  After finishing the above operation, turn the ignition switch to ON. The self diagnosis mode ends.

(2) Confirm that the system has transferred to the self diagnosis mode by checking the room light output pattern.

Interior Light Output:

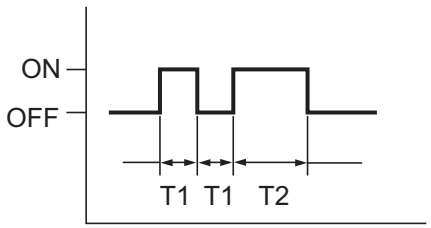

T1: 0.25 seconds

T2: 0.5 seconds

DL

Wireless Door Lock Buzzer Output:

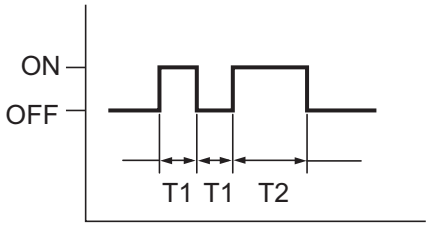

T1: 0.125 seconds

T2: 0.5 seconds

(3) Confirm that the system has transferred to the self diagnosis mode by checking the wireless door lock buzzer output pattern.

Criteria: The blinking pattern is the same as the illustration to the left

DL

Next

4	Check in self diagnosis mode

(1) Check the diagnosis output when a switch of the door control transmitter module set SUB-ASSY is pressed. The diagnosis output can be checked by the room light and wireless door lock buzzer pattern.

Interior Light and Wireless Door Lock Buzzer Output:

Normal Wave

(LOCK / UNLOCK / TRUNK OPEN / PANIC Switch):

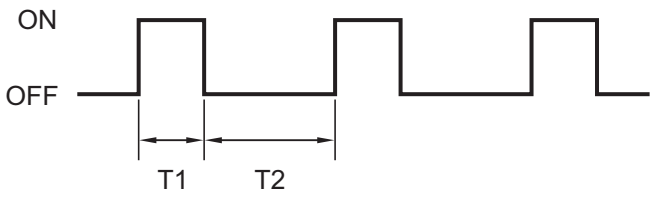

T1: 0.25 seconds (Interior Light)

0.125 seconds (Wireless Door Lock Buzzer)

T2: 0.5 seconds (Interior Light)

0.25 seconds (Wireless Door Lock Buzzer)

Unmatching Recognition Code:

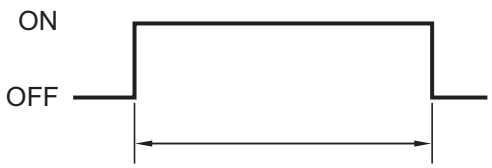

Wave is being received

No Diagnostic Output:



SL-02279

Result

Result	Go to
The normal patterns (light blinking pattern and buzzer sounding pattern) are output.	A
Nonconforming recognition code is output.	B
No diagnosis output	C

B → Go to Step 5.

C → Go to Step 6.

A

Replacement of the main body ECM (multiplex network body ECM)

5	Register the recognition code

(1) Confirm that the system can transfer to the rewrite mode or addition mode and a recognition code can be registered.
Criteria: Recognition code can be registered

NG → Replace the transmitter SUB ASSY module set door control

OK

Complete

6	Checking response of door control receiver

(1) Procure a door control transmitter from another vehicle.
(2) Press and hold the door control transmitter switch.
(3) Confirm that a nonconforming recognition code is output.
Criteria: Nonconforming recognition code is output.

NG → Go to Step 10.

OK

7	Performing unit inspection of transmitter battery (voltage)

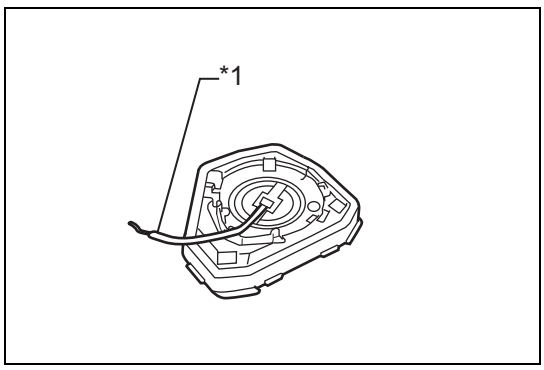

(1) Remove the battery from the inoperative door control transmitter module. Attach a lead wire (0.6 mm {0.0236 in} or less including insulator) to the negative terminal using an adhesive tape.
CAUTION:
Do not wind the lead wire around the terminal. Instead, put it into a gap on the terminal or solder it. If you wind the lead wire around the terminal, the terminal may be deformed or damaged, and the battery may no longer fit into the transmitter.

Captions in illustration

*1	Lead wire

(2) Carefully pull the lead wire out from the position shown in the figure, and insert the previously removed transmitter battery.

CAUTION:
When replacing the transmitter battery, it is necessary to remove any static electricity charged in your body before starting the work. A recommendable method for preventing damage to the door control transmitter is to touch the vehicle body.

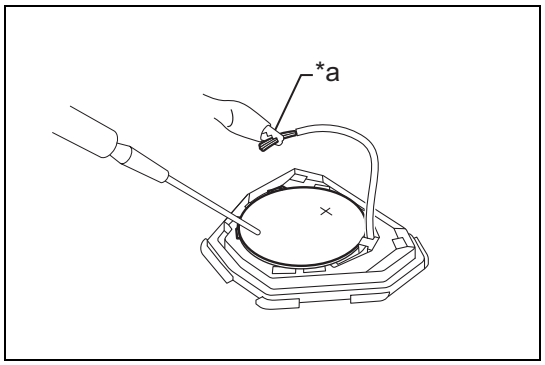

(3) Measure the voltage according to the following table.
NOTE:
When measuring the battery voltage, press any of the transmitter switches.

Voltage

Tester connection	Switch conditions	Specified condition
Battery (+) - Battery (-)	Always	2.5 to 3.2V

Captions in illustration

*a	GND

NG → Go to Step 8.

OK

Replace the transmitter SUB ASSY module set door control (Refer to DL - 96)

8	Replacing transmitter battery

Replace the transmitter battery. (Refer to DL - 94)

Next

9	Check in self diagnosis mode

(1) Check the diagnosis output when a switch of the door control transmitter module set SUB-ASSY is pressed. The diagnosis output can be checked by the room light blinking pattern and wireless door lock buzzer pattern.

Interior Light and Wireless Door Lock Buzzer Output:

Normal Wave

(LOCK / UNLOCK / TRUNK OPEN / PANIC Switch):

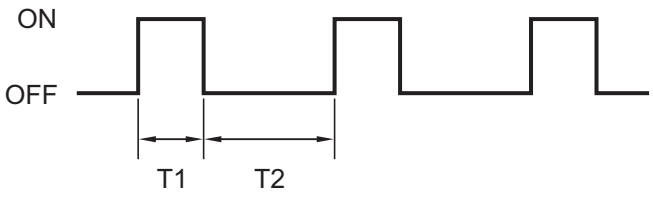

T1: 0.25 seconds (Interior Light)

0.125 seconds (Wireless Door Lock Buzzer)

T2: 0.5 seconds (Interior Light)

0.25 seconds (Wireless Door Lock Buzzer)

Unmatching Recognition Code:

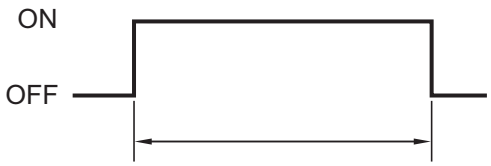

Wave is being received

No Diagnostic Output:



SL-02279

Result

Result	Go to
The normal patterns (light blinking pattern and buzzer sounding pattern) are output.	A
Nonconforming recognition code is output.	B
No diagnosis output	

B → Replace the transmitter SUB ASSY module set door control

A

Complete (transmitter battery trouble)

10	Checking radio wave environment

(1) Bring the door control transmitter close to the door control receiver and check the wireless operations.

Result

Result	Go to
If wireless function does not operate properly	A
If wireless function operates properly	B

NOTE:
- When the transmitter is brought close to the door control receiver, the possibility of radio disturbance is lowered. This offers an opportunity to determine if the symptom is caused by radio disturbance.
- If the symptom occurs only in a particular place or time zone, it is possible that the symptom is caused by radio disturbance. In addition, installing an additional component to the vehicle makes the vehicle more susceptible to interference from external radio waves. If such components are found, remove them, and then proceed to check the operation.

B → Interference from external radio waves

A

11	Inspecting door control receiver (power, ground)

DL

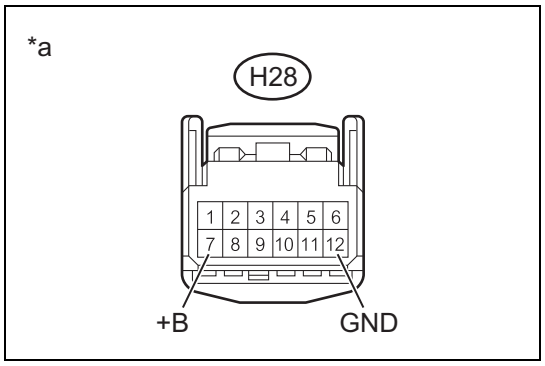

(1) Disconnect the door control receiver connector H28.
(2) Measure the resistance and voltage based on the following table.

Voltage

Inspection terminals	Inspection conditions	Standard value
H28-7 - chassis ground	Always	11 to 14V

Resistance

Inspection terminals	Inspection conditions	Standard value
H28-12 - chassis ground	Always	1 Ωor less

Captions in illustration

*a	Front side of vehicle wiring harness connector (To door control receiver)

NG → Repair or replacement of wiring harness or connector

OK

12	Inspecting door control receiver (output)

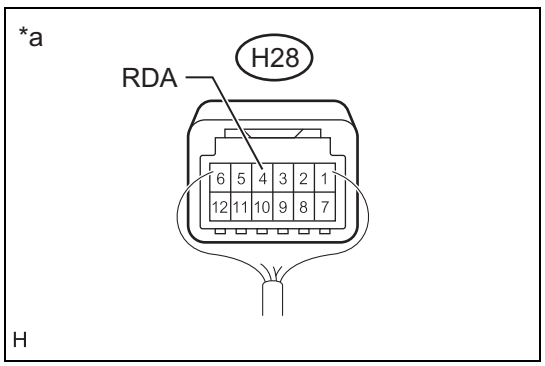

(1) Reconnect the door control receiver connector H28.

(2) Measure the voltage according to the following table.
Voltage

Inspection terminals	Inspection conditions	Standard value
H28-4 - chassis ground	Ignition switch is OFF, all doors are closed, door control transmitter switch is OFF	11 to 14V
	Ignition switch is OFF, all doors are closed, door control transmitter switch is ON	Pulse generation

Captions in illustration

*a	Connector connected (Door control receiver)

NG → Door control receiver replacement (Refer to DL - 111)

OK

13 Inspecting wiring harness and connector (main body ECM - door control receiver)

(1) Disconnect the main body ECM (multiplex network body computer) connector D6.
(2) Disconnect the door control receiver connector H28.
(3) Measure the resistance according to the following table.

Resistance

Inspection terminals	Inspection conditions	Standard value
D6-7 - H28-4	Always	1 Ωor less
D6-7 or H28-4 - Chassis ground	Always	10 kΩ or more
D6-6 - H28-5	Always	1 Ωor less
D6-6 or H28-5 - Chassis ground	Always	10 kΩ or more

NG → Repair or replacement of wiring harness or connector

OK

14 Replacing the door control receiver

(1) Temporarily replace the door control receiver with a new or normally functioning one. (Refer to DL - 111)

Next

15 Register the recognition code

(1) Execute the registration procedure. (Refer to DL - 97)

Next

16 Inspecting door control receiver (operation)

(1) Check that doors are locked and unlocked using the lock and unlock switches of the transmitter.
Criteria: Doors can be locked and unlocked by transmitter.

NG → Replace the main body ECM (multiplex network body ECM)

OK

Complete (door control receiver trouble)

Answer-back function does not work

Circuit description

In some cases, the hazard warning light and/or the wireless door lock buzzer answer-back function * may not operate even though the wireless door lock control function is normal. In such a case, there may be a fault in the hazard warning light and the wireless door lock buzzer signal output of the main body ECM (multiplex network body ECM).

Circuit figure

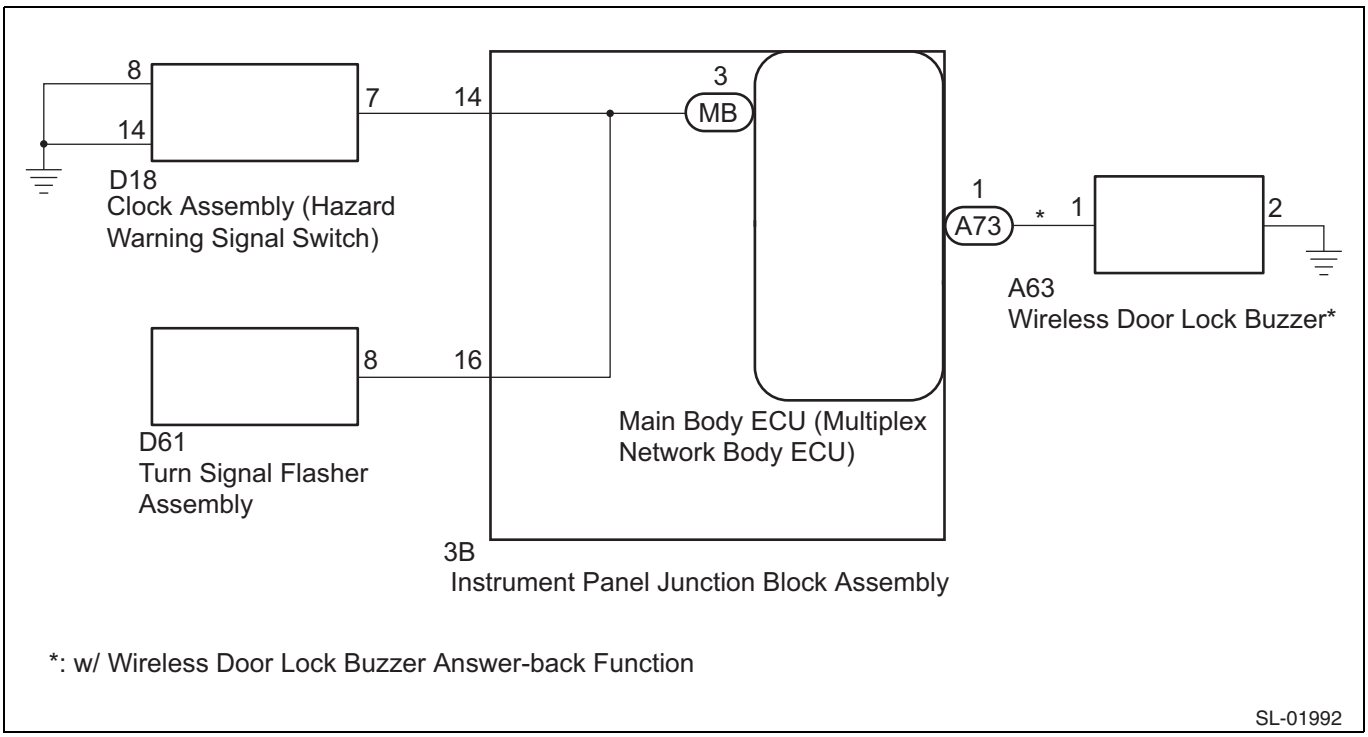

Inspection steps

1	Reading values with SSM4 (answer-back operation)

(1) Connect the SSM4 to the DLC3.
(2) Turn IG SW to ON.
(3) Turn on the SSM4.
(4) Enter the following menu. [Body Control] →[Customize]
(5) Referring to the table below, perform settings.

Display	Initial setting	Contents	Setting	Controller ECM
[Hazard Answer Back]	ON	When a door is locked by wireless operation, the hazard warning lights flash once. When a door is unlocked by wireless operation, the hazard warning lights flash twice.	OFF or ON	Main body ECM (multiplex network body ECM)
[Wireless Buzzer Resp]	ON	Wireless door lock buzzer response	OFF or ON	Main body ECM (multiplex network body ECM)
[Wireless Buzzer Volume]	Level 5	Wireless door lock buzzer volume	Level 7, Level 6, Level 5, Level 4, Level 3, Level 2, Level 1, or Level 0	Main body ECM (multiplex network body ECM)

Result

Result	Go to
Both items are ON and levels except 0	A
Both items are OFF or level 0	B

B → Execute the customize function.

A

2	Inspecting wireless door lock control function

(1) Inspect the wireless door lock control functions using the door control transmitter module set SUB-ASSY.

Result

Result	Go to
The wireless door lock/unlock functions operate properly.	A
The wireless door lock/unlock functions do not operate properly.	B

B → Go to "Symptom table" (refer to DL - 52).

A

3	Checking wireless answer-back operation

(1) Inspect the wireless answer-back operation using the door control transmitter module set SUB-ASSY.

Result

Result	Go to
Only wireless door lock buzzer answer-back does not occur.	A
Only hazard warning light answer-back does not occur.	B

B → Go to Step 8.

A

4	Using SSM4, perform an active test (wireless door lock buzzer).

(1) Connect the SSM4 to the DLC3.
(2) Turn IG SW to ON.
(3) Turn on the SSM4.
(4) Enter the following menu. [Body Control] →[Active Test]
(5) Follow the SSM4 on-screen instructions to perform an active test.

Main body

Tester display	Tested parts	Control range	Notes for diagnosis
[Keyless Buzzer Output]	Wireless door lock buzzer	ON / OFF	-

Result

Result	Go to
Wireless door lock buzzer do not turn ON/OFF.	A
Wireless door lock buzzer turns ON/OFF.	B

B → Replacement of the main body ECM (multiplex network body ECM)

A

5 Inspecting wiring harness and connector (wireless door lock buzzer - main body ECM)

(1) Disconnect the wireless door lock buzzer connector A63.
(2) Disconnect the connector A73 of the main body ECM (multiplex network body ECM).
(3) Measure the resistance according to the following table.

Resistance

Inspection terminals	Inspection conditions	Standard value
A63-1 - A73-1	Always	1 Ωor less
A63-2 - Chassis ground	Always	1 Ωor less
A63-1 - Chassis ground	Always	10 kΩ or more

NG → Repair or replacement of wiring harness or connector

OK

6 Replacing wireless door lock buzzer

(1) Temporarily replace the wireless door lock buzzer with a new one. (Refer to DL - 96)

Next

7 Checking wireless door lock buzzer operation

(1) Check the wireless answer-back function operation.
Criteria: The wireless answer-back function operates properly

NG → Replacement of the main body ECM (multiplex network body ECM)

OK

Complete (Wireless door lock buzzer is faulty)

8 Hazard warning light operation

(1) Check that the hazard warning light blinks when the hazard warning switch is pressed.
Criteria: Hazard warning light signal is normal

NG → Refer to the lighting system (Symptom table)

OK

Replacement of the main body ECM (multiplex network body ECM)

Key warning system

PARTS LOCATION

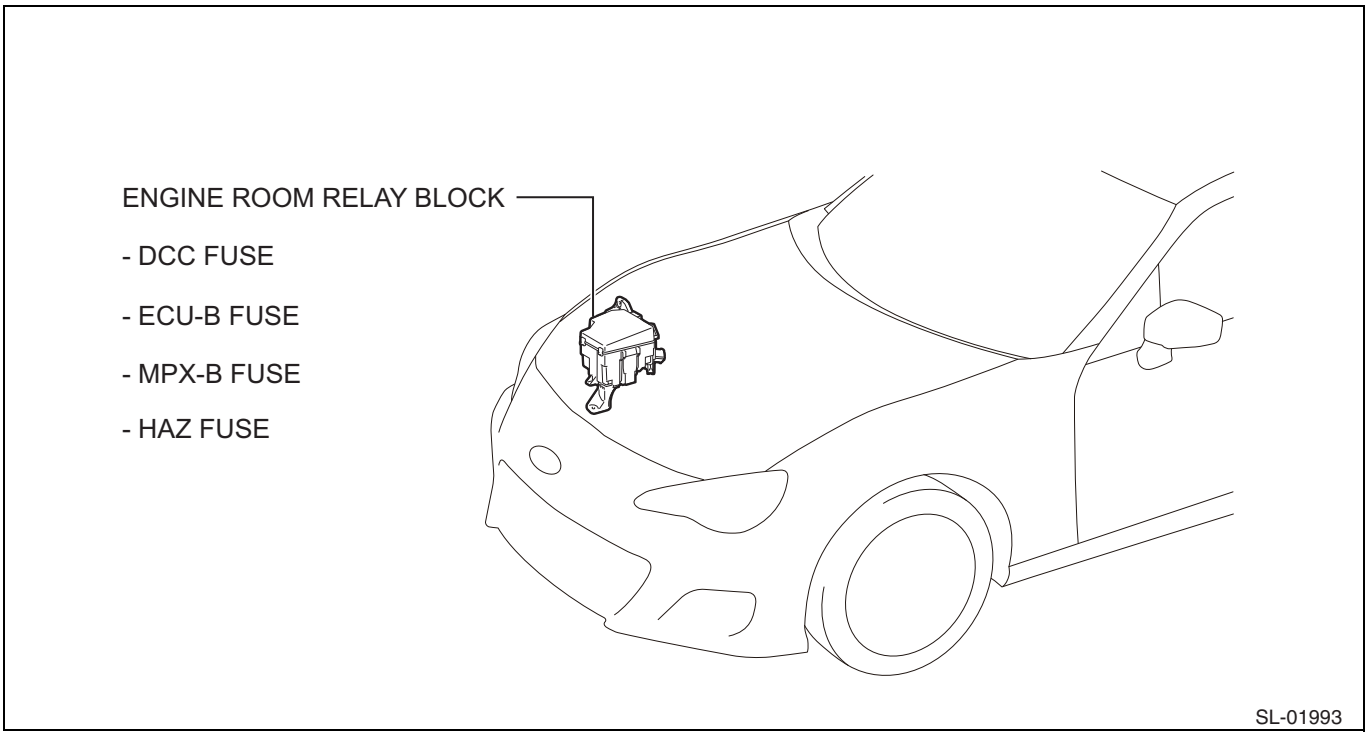

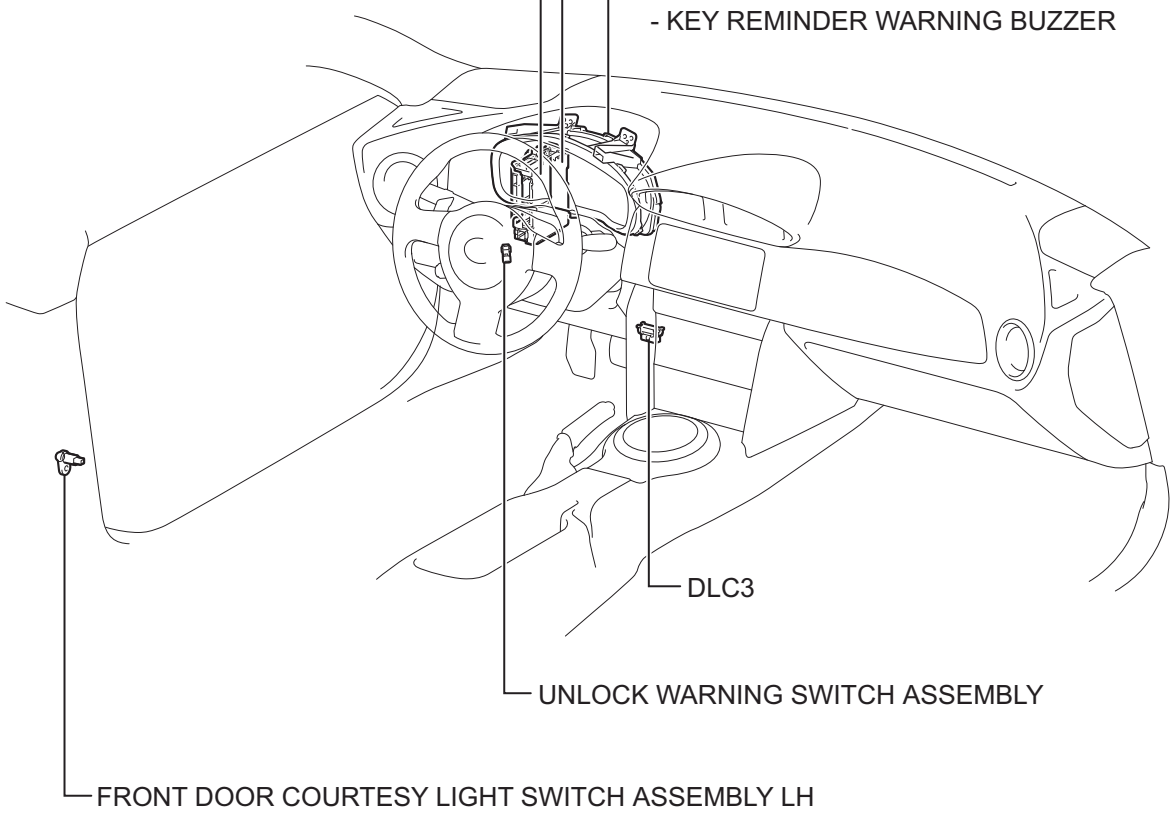
MAIN BODY ECU (MULTIPLEX NETWORK BODY ECU)
INSTRUMENT PANEL JUNCTION BLOCK ASSEMBLY
- ECU IG1 FUSE
- ECU ACC FUSE
COMBINATION METER ASSEMBLY
- KEY REMINDER WARNING BUZZER
DLC3
UNLOCK WARNING SWITCH ASSEMBLY
FRONT DOOR COURTESY LIGHT SWITCH ASSEMBLY LH

SL-02033

SYSTEM DIAGRAM

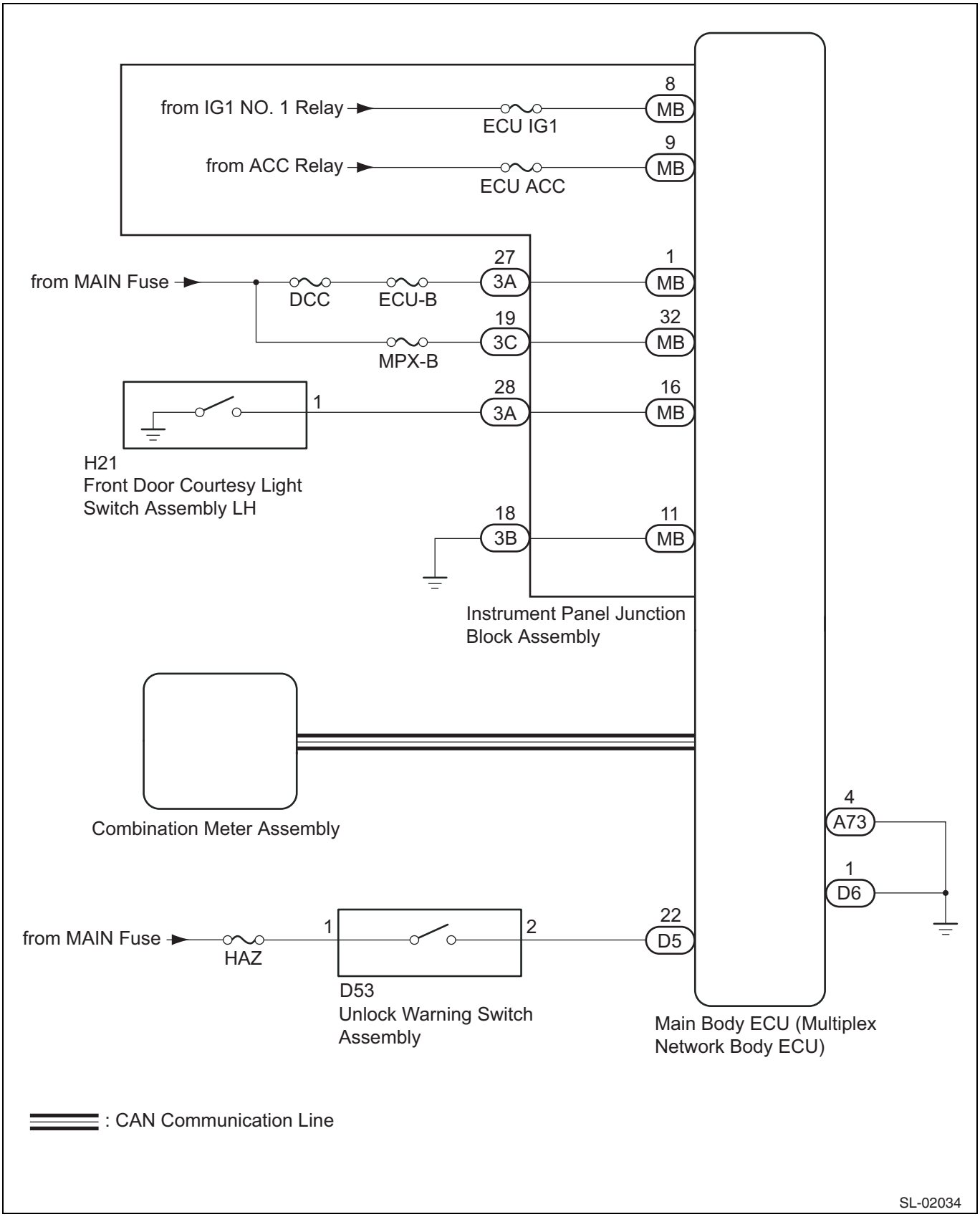

Description of functions

1. Details of key warning system
   (1) If the driver's door is opened with the ignition key at ACC or lock position, the key warning buzzer sounds to alert the driver to the key left inserted.

How to troubleshoot

NOTE:

- Using the following procedures, perform the key warning system troubleshooting.
- *: Use the SSM4.

1	Bring in the car

Next

2	Check battery voltage

(1) Inspect the battery voltage.
Standard voltage: 11 to 14V
NOTE:
If the voltage is 11 V or less, charge or replace the battery before proceeding to a next step.

Next

3	CAN communication system check

(1) Check CAN communication system. (Refer to NW - 30)
Result

Result	Go to
Functioning properly	A
Not functioning properly	B

B → Go to "CAN communication system (How to troubleshoot)" (Refer to NW - 30).

A

4	Symptom table

Result

Result	Go to
No trouble is indicated in check list for interview	A
A trouble is indicated in check list for interview	B

B → Go to Step 6.

A

5	General analysis and troubleshooting *

(1) ECM terminals (Refer to DL - 87)
(2) Data monitor / active test (Refer to DL - 88)

Next

6	Repair or replace

Next

7	Confirmation test

Next

Complete

DL

Operation check

1. Function inspection
   (1) Check that the key warning buzzer sounds.
      (a)Insert a key in the ignition key cylinder with the driver's door closed and turn the key to the lock position or ACC.
      (b)Check that the buzzer sounds periodically when the driver's door is opened.
   (2) Check that the key warning buzzer stops sounding.
      (a)Check that the buzzer stops sounding if the following operations are performed while the buzzer is sounding:
      - Driver's door is closed. (Front door courtesy light switch is OFF)
      - Turn IG SW to ON.
      - Remove the key from the ignition key cylinder.

customize function

1. Customization of key warning system
   (1) Customization via SSM4
      CAUTION:
      - When a customer requests a function change, check if the function is customizable.
      - Before starting customization, record the current settings.
      - Before performing the troubleshooting procedure for a function, check that the function is set to the initial settings.

      NOTE:
      The items below are customizable.
      (a)Connect the SSM4 to the DLC3.
      (b)Turn IG SW to ON.
      (c)Turn on the SSM4.
      (d)Enter the following menu. [Body Control] →[Customize]
      (e)Referring to the table below, perform settings.

Warning

Display name	Initial setting	Contents	Setting	Controller ECM
[Key Remind Sound]	Normal	Function to change the cycle of the key warning buzzer.	Normal, slow, fast	Combination meter ASSY

Symptom table

NOTE:

- Use the following table to identify the cause of the symptom. If multiple areas are listed as the causes, they are indicated in the [Faulty part] column according to the order of probability of causing the symptom. Check the possible causal areas in the list order and confirm each symptom. Replace faulty parts as necessary.
- Before inspecting the areas listed in "Possible cause" below, check the fuses and the relays related to this system.

Key warning system

Symptoms	Faulty part	Reference pages
Key reminder buzzer does not sound	Proceed to "Key reminder buzzer does not sound"	DL - 89

ECM terminal arrangement

1. Check the instrument panel junction block ASSY and the main body ECM (multiplex network body ECM).

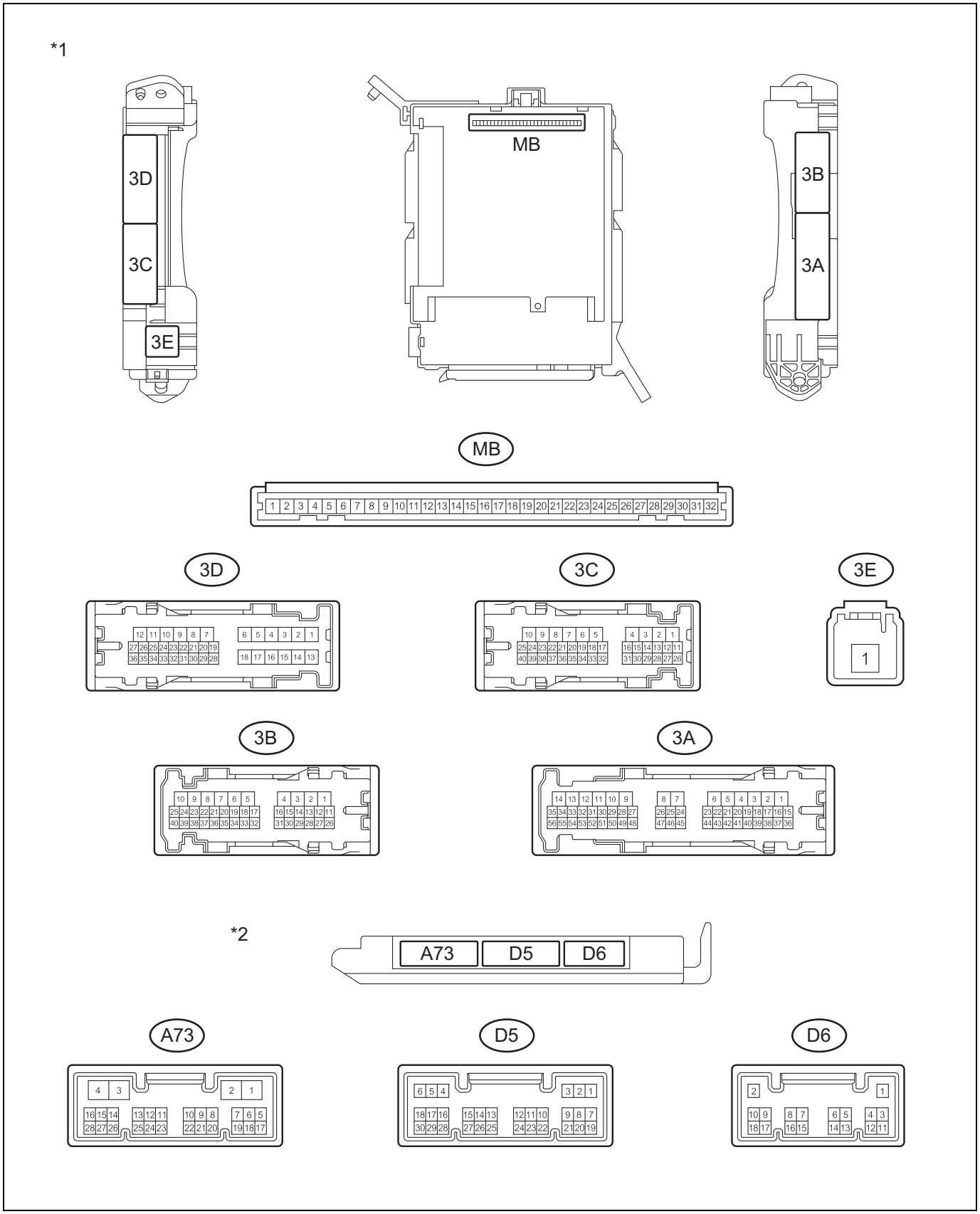

Captions in illustration

*1	Instrument panel junction block ASSY	*2	Main body ECM (multiplex network body ECM)

(1) Remove the main body ECM (multiplex network body ECM) from the instrument panel junction block ASSY.

(2) Disconnect the connectors D5, D6, and A73 of the main body ECM (multiplex network body ECM).
(3) Measure the voltage and resistance according to the following table.

Terminal No. (symbol)	Terminal description	Conditions	Specified condition
MB-1 - chassis ground	Battery power supply	Always	11 to 14 V
MB-8 - chassis ground	IG SW power supply	IG SW ON	11 to 14 V
		IG SW OFF	1 V or less
MB-9 - chassis ground	ACC power supply	IG SW ACC	11 to 14 V
		IG SW OFF	1 V or less
MB-11 - chassis ground	Ground	Always	1 Ωor less
MB-32 - chassis ground	Battery power supply	Always	11 to 14 V
D5-22 - chassis ground	Unlock warning switch input	Key is not inserted in ignition key cylinder (OFF)	1 V or less
		Key is inserted to the ignition key cylinder (ON).	11 to 14 V
D6-1 - Chassis ground	Ground	Always	1 Ωor less
A73-4 - chassis ground	Ground	Always	1 Ωor less

DL

(4) Reconnect the connector D5, D6, and A73 of the main body ECM (multiplex network body ECM).
(5) Install the main body ECM (multiplex network body ECM) to the instrument panel junction block ASSY.
(6) Measure the voltages and pulses according to the values indicated in the table below.

Terminal No. (symbol)	Terminal description	Conditions	Specified condition
3A-28 - chassis ground	Driver's side courtesy light switch	Driver's door is open.	1 V or less
		Driver's door is closed	Pulse generation

Data monitor / active test

1. Read data list

CAUTION:
The values indicated under the normal conditions in the table below are informative values. Do not depend on reference value only when judging if the part is faulty.
NOTE:
By using the SSM4 for reading the data list, it is able to read the values and the status of the switches, sensors, or actuators without removing these parts. This inspection is very useful because it allows an operator to read any intermittent conditions or signals without disturbing parts or wiring. Diagnostic time can be saved by reading the data monitor information at the initial stage of the troubleshooting.

(1) Turn IG SW to OFF.
(2) Connect the SSM4 to the DLC3.
(3) Turn IG SW to ON.
(4) Turn on the SSM4.
(5) Enter the following menu. [Body Control] →[Data monitor]
(6) Using SSM4, read the data list according to the screen displays.

Main body

Item Name	Description/display range	Normal condition	Remarks
[Ignition]	Ignition switch signal / ON or OFF	OFF:IG SW OFF ON:IG SW ON	-
[ACC SW]	Ignition switch ACC signal / ON or OFF	OFF:IG SW OFF ON:IG SW ACC	-
[Key Unlock Warning SW]	Unlock warning switch / OFF or ON	OFF: Ignition key is not inserted ON: Ignition key is inserted	-
[D Door Courtesy]	Driver's door courtesy light switch signal / ON or OFF	ON: Driver's door is open OFF: Driver's door is closed	-

Key reminder buzzer does not sound

Description of functions

If the driver's door is opened while the ignition switch is set at the lock position or ACC, the key reminder warning buzzer sounds. When the main body ECM (multiplex network body computer) transmits a key switch signal and driver's courtesy light switch signal to the combination meter ASSY, the key reminder warning buzzer operates.

Circuit figure

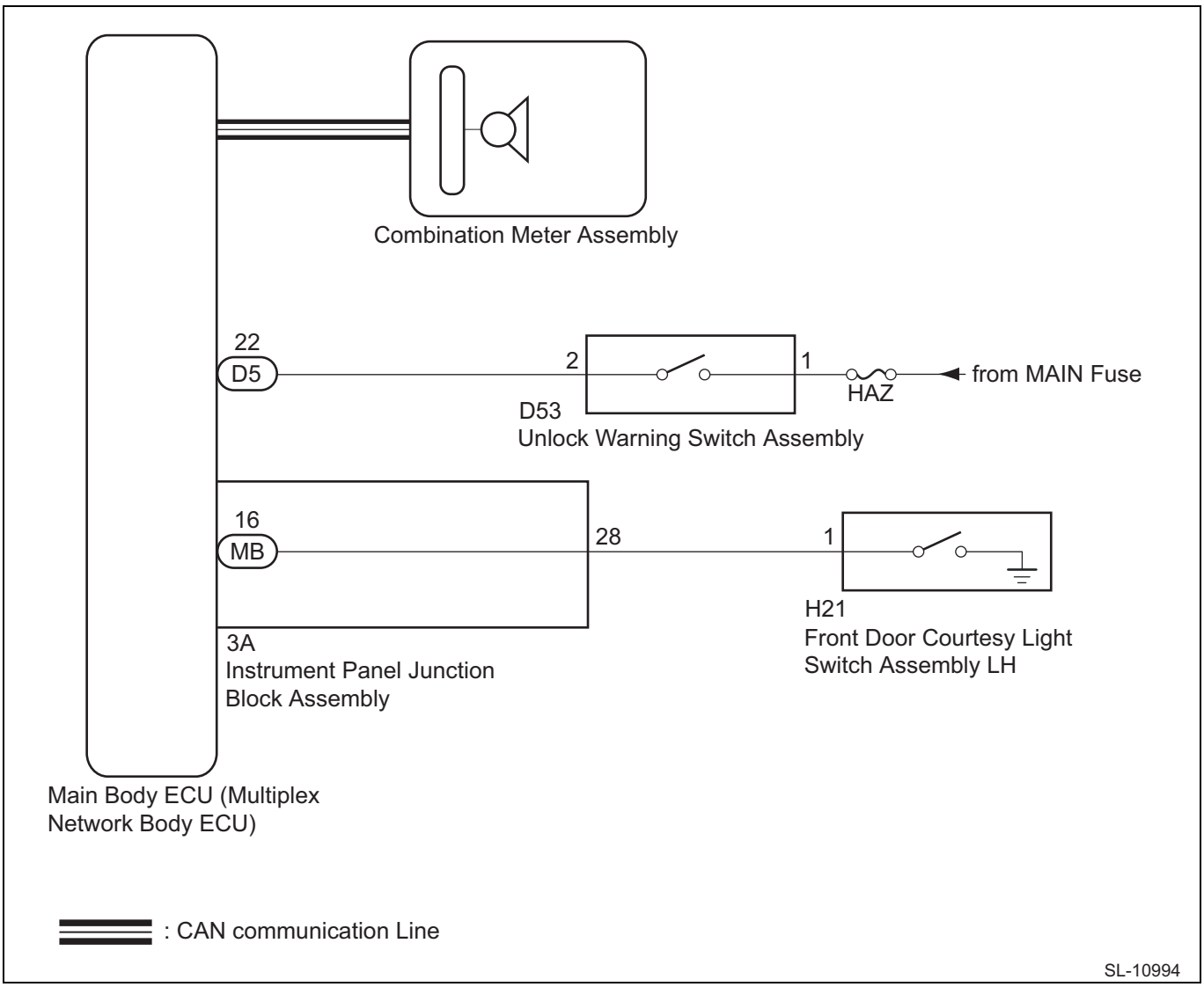

Inspection steps

NOTE:

Because the key warning system includes functions that use CAN communication, first check if any problem is present in the CAN communication function according to "How to troubleshoot". Next, perform the following troubleshooting procedure.

1	Reading values with SSM4 (front door courtesy light switch)

(1) Connect the SSM4 to the DLC3.
(2) Turn IG SW to ON.
(3) Turn on the SSM4.
(4) Enter the following menu. [Body Control] →[Data monitor]
(5) Using SSM4, read the data list according to the screen displays.

Main body

Item Name	Description/display range	Normal value	Remarks
[D Door Courtesy]	Driver's door courtesy light switch signal / ON or OFF	ON: Driver's door is open OFF: Driver's door is closed	-

Criteria: When the unlock warning switch is operated, the display is changed as indicated in the table

NG → To Lighting system (Door courtesy light switch circuit) (Refer to LI - 25)

OK

2	Reading values with SSM4 (key unlock warning switch)

(1) Connect the SSM4 to the DLC3.
(2) Turn IG SW to ON.
(3) Turn on the SSM4.
(4) Enter the following menu. [Body Control] →[Data monitor]
(5) Using SSM4, read the data list according to the screen displays.

Main body

Item Name	Description/display range	Normal value	Remarks
[Key Unlock Warning SW]	Unlock warning switch signal / OFF or ON	OFF: Ignition key is not inserted ON: Ignition key is inserted	-

Criteria: When the unlock warning switch is operated, the display is changed as indicated in the table.

NG → Go to Step 4.

OK

3	Inspecting combination meter ASSY (buzzer operation)

(1) Remove the key from the key cylinder, turn the light control switch for headlight dimmer switch ASSY to the tail position, and open the driver's door.
Criteria: The light warning buzzer sounds
NOTE:
The key warning system sounds the buzzer integrated in the combination meter and activates the lockout prevention function. This buzzer is also used for the light warning system. Therefore, check that the combination meter buzzer operates to alert the user to the light left illuminated.

NG → Replace the combination meter ASSY

OK

Replacement of the main body ECM (multiplex network body ECM)

4	Inspecting unlock warning switch ASSY

(1) Remove the unlock warning switch ASSY. (Refer to DL - 98)

(2) Inspect the unlock warning switch ASSY. (Refer to DL - 99)

NG → Replace the unlock warning switch ASSY (Refer to DL - 98)

OK

5	Inspecting wiring harness and connector (main body ECM - unlock warning switch)

(1) Disconnect the unlock warning switch ASSY connector D53.
(2) Disconnect the main body ECM (multiplex network body ECM) connector D5.

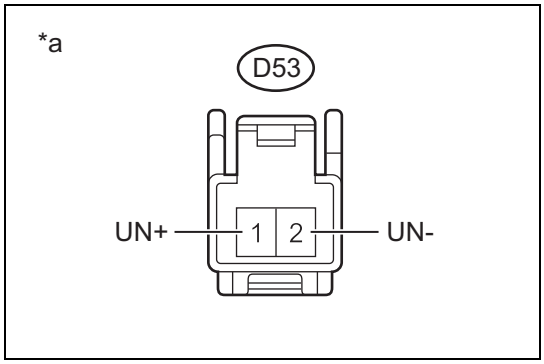

(3) Measure the voltage and resistance according to the following table.

Voltage

Inspection terminals	Inspection conditions	Standard value
D53-1 - Chassis ground	Always	11 to 14V

Resistance

Inspection terminals	Inspection conditions	Standard value
D53-2 - D5-22	Always	1 Ωor less
D53-2 - Chassis ground	Always	10 kΩ or more

Captions in illustration

*a	Front side of vehicle wiring harness connector (To unlock warning switch ASSY)

NG → Repair or replacement of wiring harness or connector

OK

Replacement of the main body ECM (multiplex network body ECM)

DL

Transmitter battery (with smart entry)

Replacement

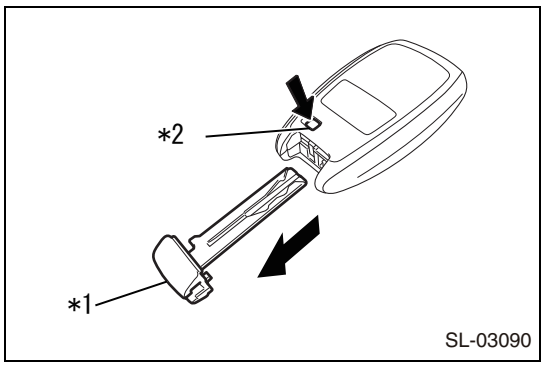

1. Removal of transmitter battery
   (1) Push the release button and remove the emergency key.

Captions in illustration

*1	Emergency key
*2	Release button

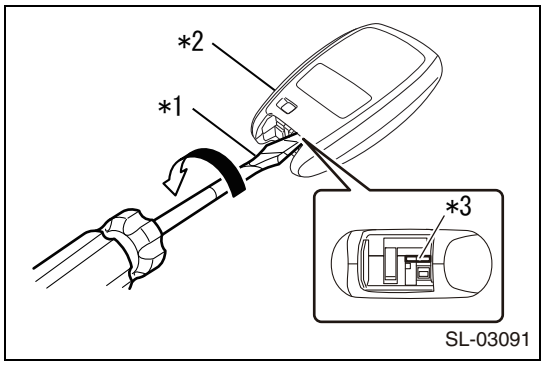

(2) Using a flat tip screwdriver wrapped with protective tape, remove the transmitter cover.

Captions in illustration

*1	Protective tape
*2	Transmitter cover
*3	Slit

CAUTION:
Do not pry the cover excessively.

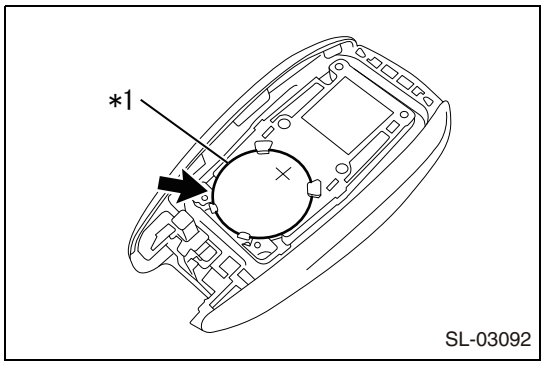

(3) Using a flat tip screwdriver wrapped with protective tape, remove the transmitter battery (lithium battery).

Captions in illustration

*1	Transmitter battery (lithium battery)

CAUTION:
- Do not press the terminal by a finger.
- If you pry the transmitter battery (lithium battery) excessively, the terminal is deformed.
- Before replacing the transmitter battery (lithium battery), touch the vehicle body to discharge static electricity carried on your body so that the electronic key is not damaged by static electricity.

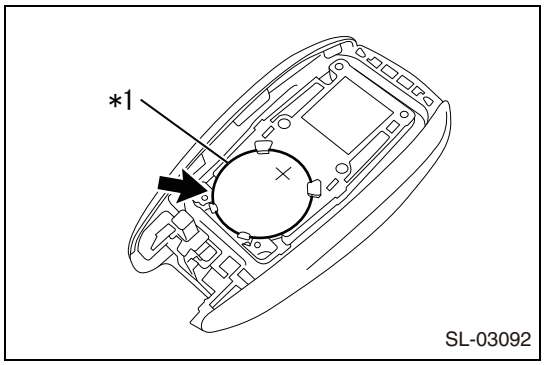

2. Installation of transmitter battery
   (1) Install the transmitter battery (lithium battery) as shown in the figure.

Captions in illustration

*1	Transmitter battery (lithium battery)

CAUTION:
- Face the positive side of the battery upward.
- Do not deform the terminal.
- Before replacing the transmitter battery,touch the vehicle body to discharge static electricity carried on your body so that the electronic key is not damaged by static electricity.

NOTE:
- If the terminal is contaminated, wipe it away with a soft cloth before installing the battery.
- Check that the terminal is not damaged and there is no foreign matters inside.

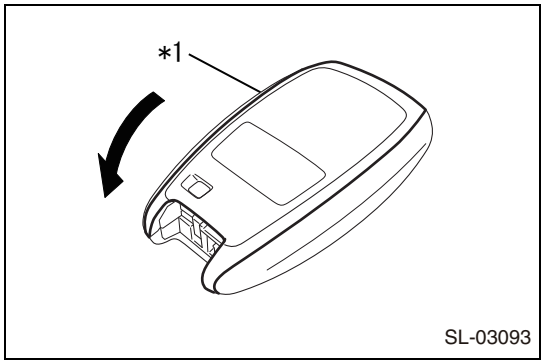

(2) Install the transmitter cover.

Captions in illustration

*1	Transmitter cover

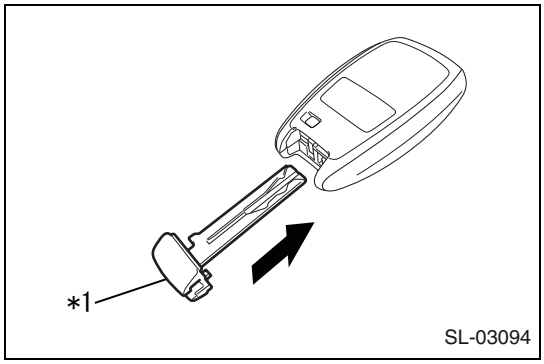

(3) Insert the emergency key.

Captions in illustration

*1	Emergency key

(4) After finishing assembly, check that LED illuminates when any switch is pressed.

Transmitter battery (without smart entry)

Replacement

1. Removal of transmitter housing cover (Refer to DL - 96)
2. Removal of door control transmitter module set (Refer to DL - 96)

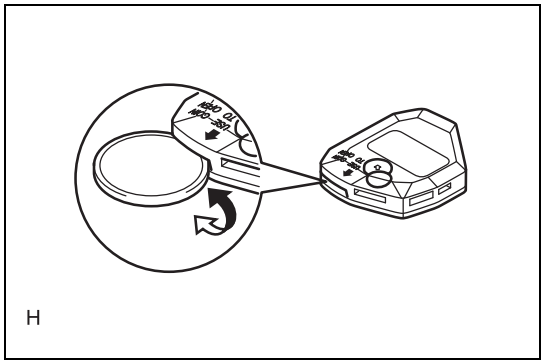

3. Removal of transmitter battery
   (1) Remove the cover using a coin or equivalent tool.

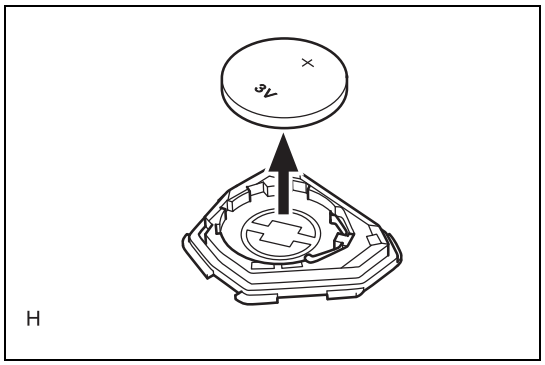

   (2) Remove the battery (lithium battery).
   CAUTION:
   - Do not press the terminal by a finger.
   - If you pry the battery (lithium battery) excessively, the terminal is deformed.
   - Before replacing the transmitter battery,touch the vehicle body to discharge static electricity carried on your body so that the electronic key is not damaged by static electricity.

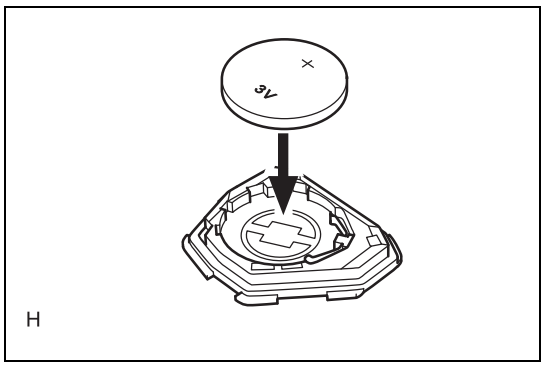

4. Installation of transmitter battery
   (1) Install the battery (lithium battery).
   CAUTION:
   - Face the positive side of the battery upward.
   - Do not deform the terminal.
   - Before replacing the transmitter battery,touch the vehicle body to discharge static electricity carried on your body so that the electronic key is not damaged by static electricity.

   NOTE:
   - If the terminal is contaminated, wipe it away with a soft cloth before installing the battery.
   - Check that the terminal is not damaged and there is no foreign matters inside.

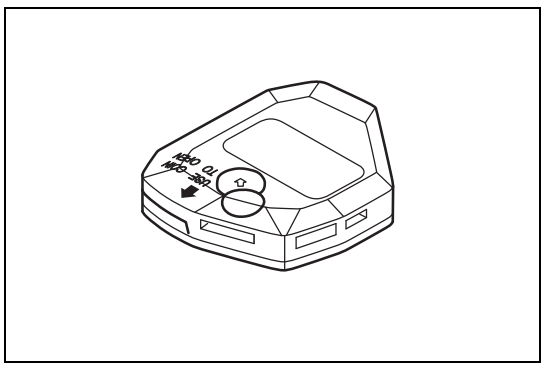

   (2) Install the cover.
   CAUTION:
   If the cover claws are not engaged securely, it causes poor contact between the battery (lithium battery) and the terminals.

5. Installation of door control transmitter module set (Refer to DL - 96)
6. Installation of transmitter housing cover (Refer to DL - 96)

Door control transmitter (without smart entry)

Exploded view

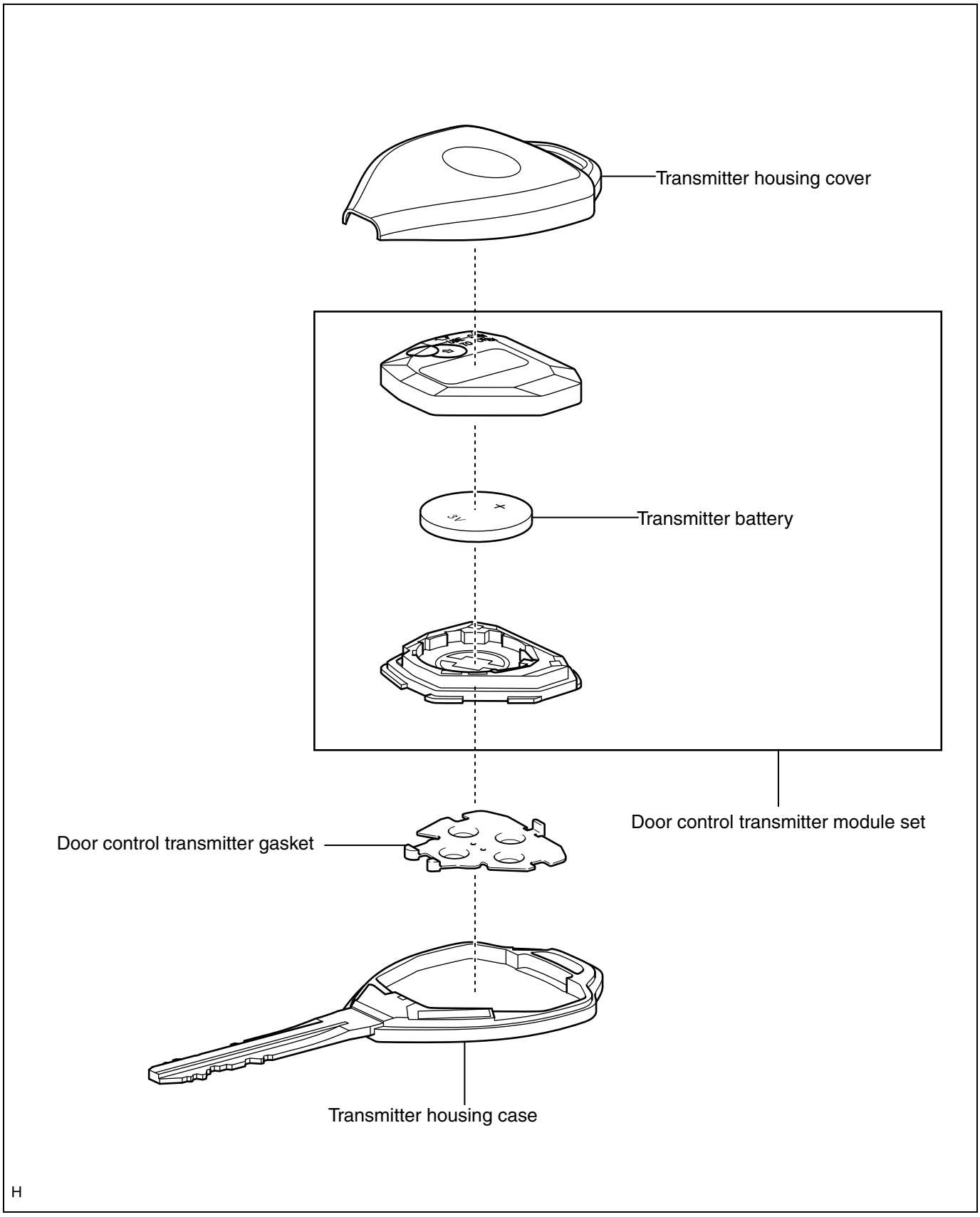

DL

Removal

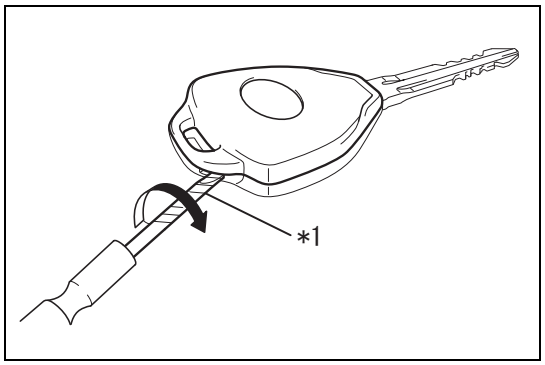

1. Removal of transmitter housing cover
   (1) Using a flat tip screwdriver wrapped with protective tape, remove the transmitter housing cover.

Captions in illustration

*1	Protective tape

CAUTION:
Do not pry the cover excessively.

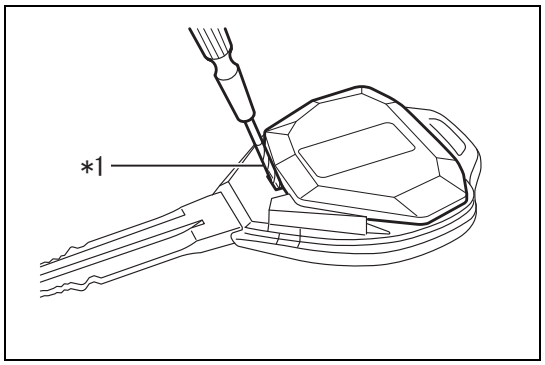

2. Removal of door control transmitter module set
   (1) Remove the door control transmitter module set from the transmitter housing case.

Captions in illustration

*1	Protective tape

3. Removal of door control transmitter gasket
   (1) Remove the door control transmitter gasket
4. Removal of transmitter battery (Refer to DL - 94)

Installation

1. Installation of transmitter battery (Refer to DL - 94)
2. Installation of door transmitter gasket
   (1) Install the door control transmitter gasket.

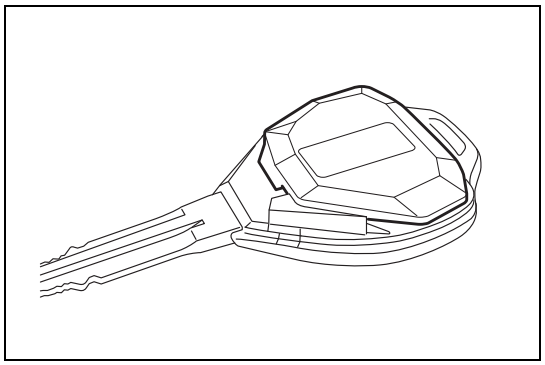

3. Installation of door control transmitter module set
   (1) Install the door control transmitter module set to the transmitter housing case.

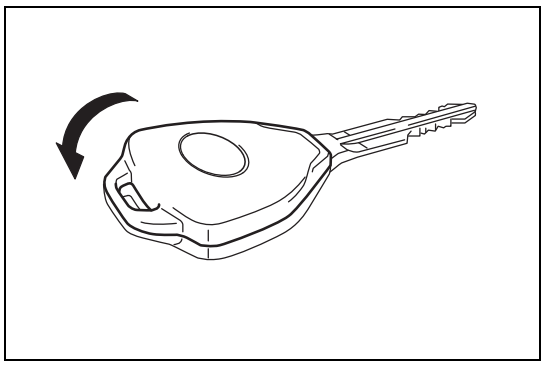

4. Installation of transmitter housing cover
   (1) Install the transmitter housing cover to the transmitter housing case.
   (2) Check that the main body LED illuminates when any of the remote control switches is pressed.

Registration settings

1. Keyless Transmitter ID registration

   NOTE:

   - The keyless ID Additional Registration is a mode to register new keyless remote transmitters additionally while keeping the existing registered codes. It is used to add a keyless remote transmitter. If the number of registered codes exceeds 6, the first registered code is erased.
   - The Keyless ID Rewrite is a mode to register only new keyless remote transmitters after first erasing all the existing registered codes. It is used to replace the remaining keyless remote transmitter codes and keep only the one currently inserted in the ignition.
   - The readout The Number of Keyless ID Registration is a mode to confirm how many keyless remote transmitters are registered. It is used to check the number of registered codes before additional registration.

   (1) Turn the ignition switch to ON with the key that includes the remote which you would like to register.
   (2) Turn SSM4 on.
   (3) Enter following menus: [Inspection BRZ]/[Each System Check]/[Keyless Unit Mode]/[Work Support]/[Keyless ID registration]
   (4) Keyless ID registration.
      (a) After selecting the [Keyless ID addition registration] or [Keyless ID renewal], press the lock and unlock switches of the keyless remote transmitter simultaneously. (For 1 second)
      (b) Again, press any of the transmitter switches within 3 seconds after. (For 1 second)
         Audible tone indicates complete. (When registration is complete, the external buzzer will sound twice)
         NOTE:
         Up to 6 keyless IDs can be registered.
   (5) End of registration mode (The mode ends if any of the following is satisfied)
      (a) Completion request is issued from SSM4.
      (b) SSM4 connection is shut off.
      (c) No code has been entered for 30 seconds or more in registration mode.
   (6) After the registration operation, perform the following.
      (a) Confirm the correct operation of all keyless remote transmitters. (Does not apply to keyless access and start)
         CAUTION:
         If wireless operation does not work, repeat the keyless ID registration.

Unlock warning switch ASSY

Exploded view

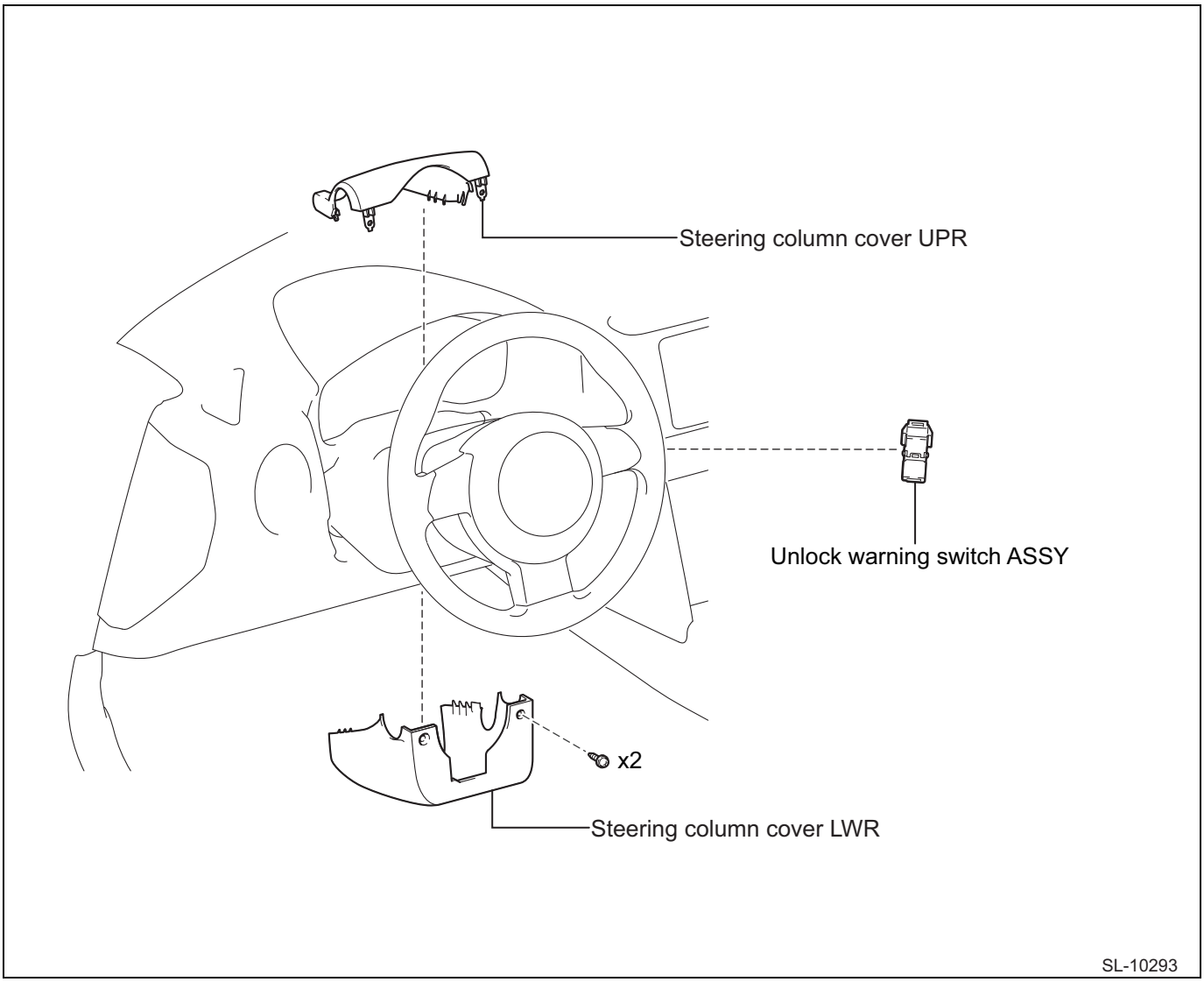

DL

Removal

1. Removal of the steering column cover LWR (Refer to WW - 22)
2. Removal of the steering column cover UPR (Refer to WW - 23)

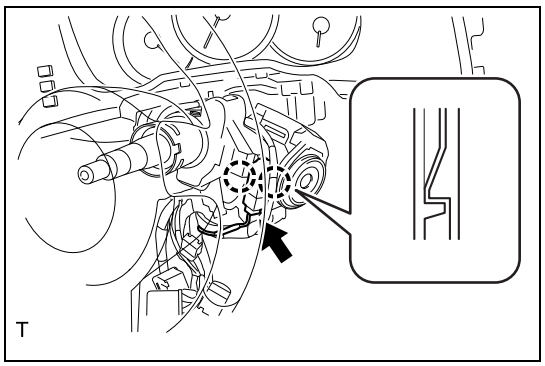

3. Removal of unlock warning switch ASSY
   (1) Disconnect the connector.
   (2) Release the two claws and remove the unlock warning switch ASSY.

Installation

1. Installation of unlock warning switch ASSY
   (1) Engage the two claws and install the unlock warning switch ASSY.

(2) Connect the connector.

2. Installation of the steering column cover UPR (Refer to WW - 23)
3. Installation of the steering column cover LWR (Refer to WW - 23)

Unit inspection

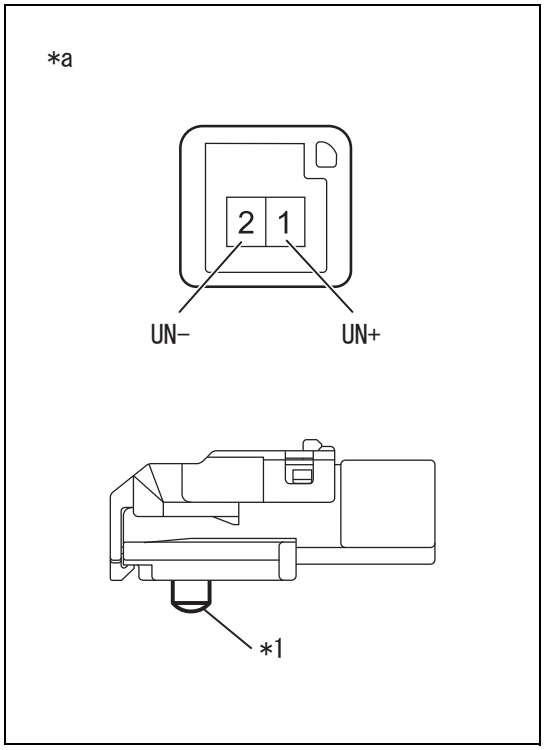

1. Inspection of unlock warning switch ASSY
   (1) Resistance check
      (a)Measure the resistance between the terminals.

Resistance

Inspection terminals	Inspection conditions	Standard value
1(UN+) - 2(UN-)	When pin is pressed in	Less than 1 Ω
1(UN+) - 2(UN-)	When pin is not pressed in	10 kΩ or more

Captions in illustration

*1	Pin
*a	Connector not connected (Unlock warning switch ASSY)

DL

Front door lock ASSY

Exploded view

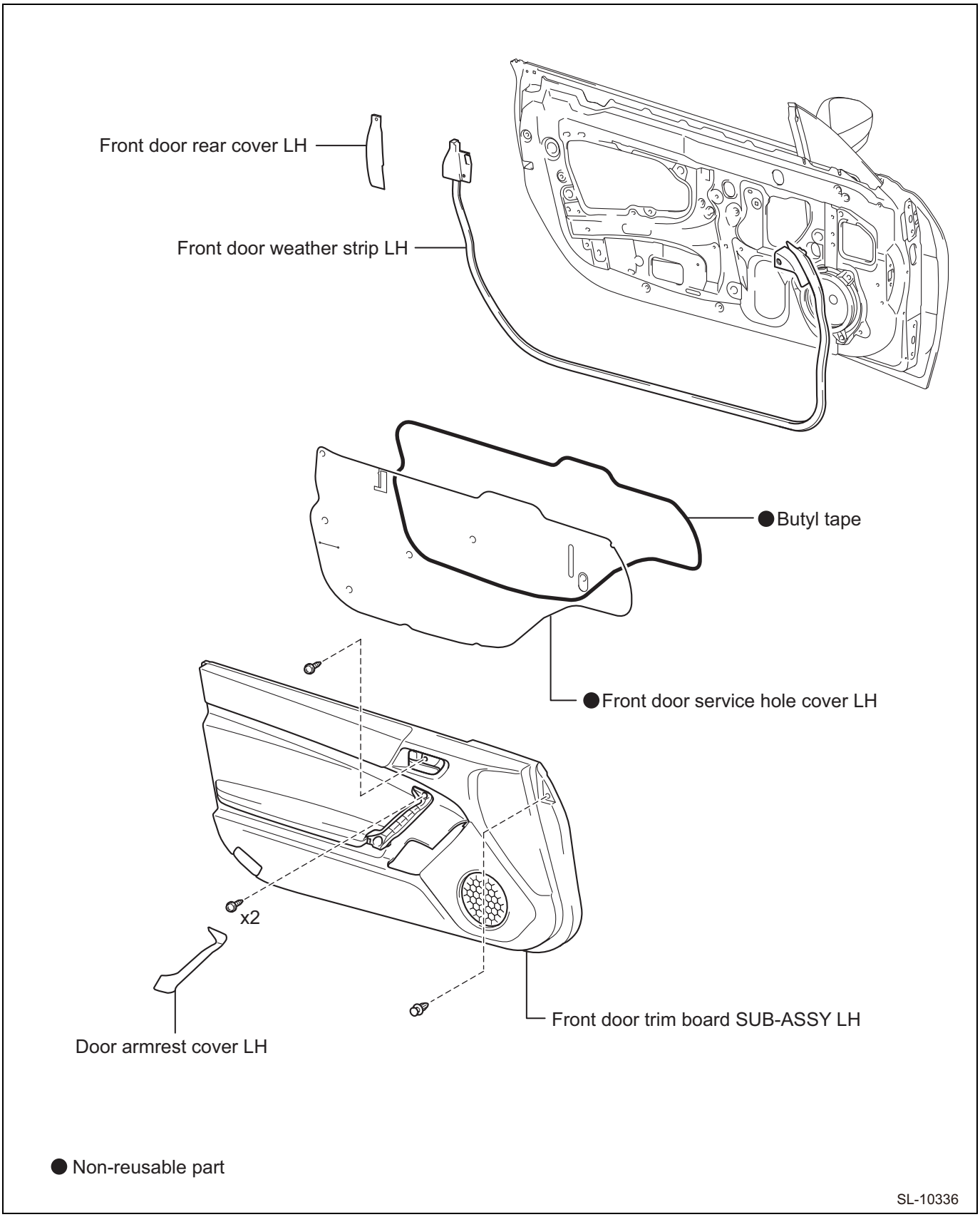

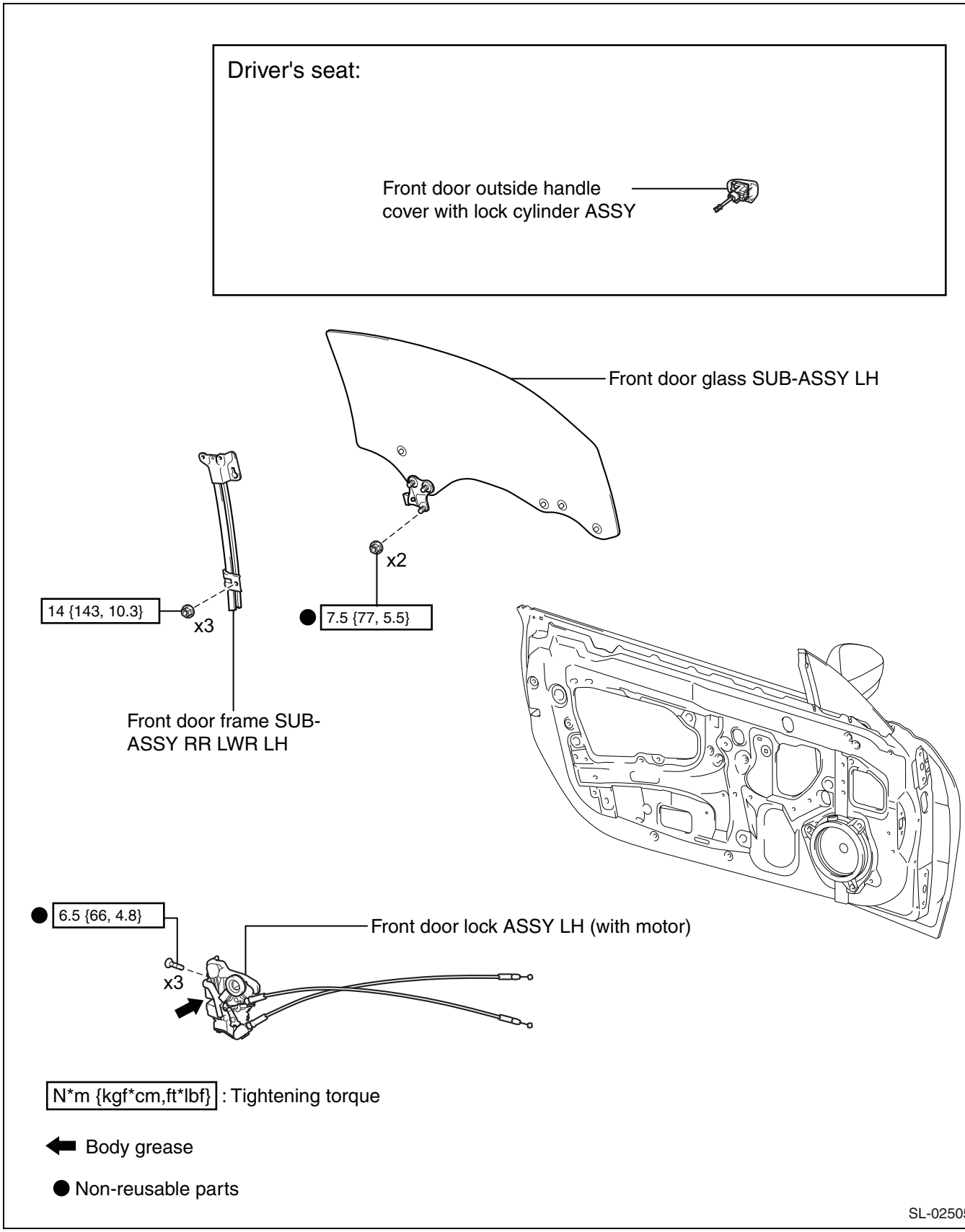

DL

Removal

NOTE:

The following procedure is for LH side. Perform the same procedures for the RH side.

1. Disconnection of the battery ground terminal (Refer to IN - 6)

2. Removal of the door armrest cover LH (Refer to DH - 32)
3. Removal of the front door trim board SUB-ASSY LH (Refer to DH - 32)
4. Removal of the front door service hole cover LH (Refer to DH - 36)
5. Removal of the front door glass SUB-ASSY LH (Refer to DH - 36)
6. Removal of the front door frame SUB-ASSY RR LWR LH (Refer to DH - 37)
7. Removal of the front door outside handle cover W/ lock cylinder ASSY (driver's door) (Refer to DH - 39)

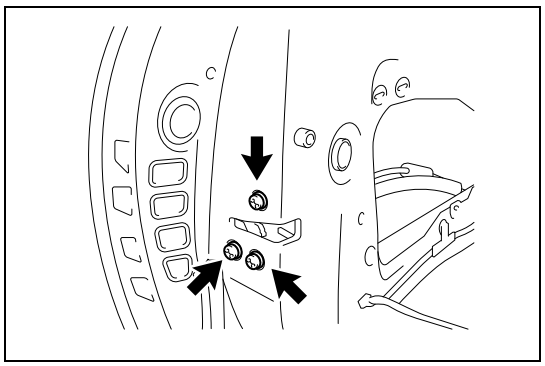

8. Removal of the front door lock ASSY LH (with motor)
   (1) Remove the 3 bolts.
   (2) Slide down the front door lock ASSY LH (with motor) and remove the front door lock ASSY LH (with motor) from the front door lock open rod LH.

DL

Installation

NOTE:

The following procedure is for LH side. Perform the same procedures for the RH side.

1. Applying of body grease
   (1) Apply body grease to the sliding surface of the front door lock ASSY LH (with motor).

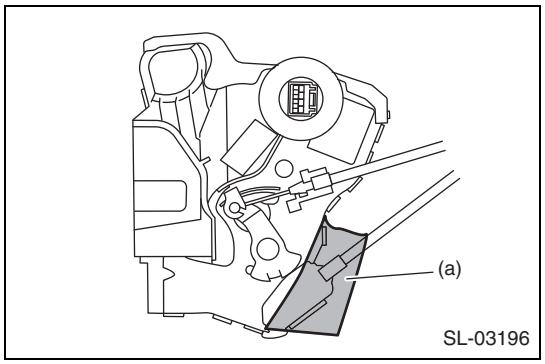

2. Installation of the front door lock ASSY LH (with motor)
   CAUTION:
   - Make sure that no grease or dust adheres to the door lock wire harness seal of the connector.
   - Check that the waterproof tape (a) is applied properly. Even a small gap between part and tape may result in ingress of water, causing an inoperative condition.

   (1) Install the front door lock ASSY LH (with motor) using three new bolts.
   Standard value:T=6.5N·m {66kgf·cm} {4.8ft·lbf}

3. Installation of the front door outside handle cover W/ lock cylinder ASSY (driver's door) (Refer to DH - 46)
4. Installation of the front door frame SUB-ASSY RR LWR LH (Refer to DH - 48)
5. Installation of the front door glass SUB-ASSY LH (Refer to DH - 48)
6. Adjustment of the front door glass SUB-ASSY LH (Refer to DH - 49)
7. Installation of the front door service hole cover LH (Refer to DH - 49)
8. Installation of the front door trim board SUB-ASSY LH (Refer to DH - 52)
9. Installation of the door armrest cover LH (Refer to DH - 54)
10. Connection of the battery ground terminal
    Standard value:T=6.0N·m {61kgf·cm} {4.4ft·lbf}
11. Settings when removing/installing battery terminals (Refer to IN - 10)

Unit inspection

1. Inspection of front door lock ASSY LH (with motor)
   (1) Operation check of door lock
      (a)Check the door lock operation when battery voltage is applied to each terminal of the connector.

Criteria

Battery connection	Door lock operation
Battery positive →4(L) Battery negative →1(UL)	LOCK
Battery positive →1(UL) Battery negative →4(L)	UNLOCK

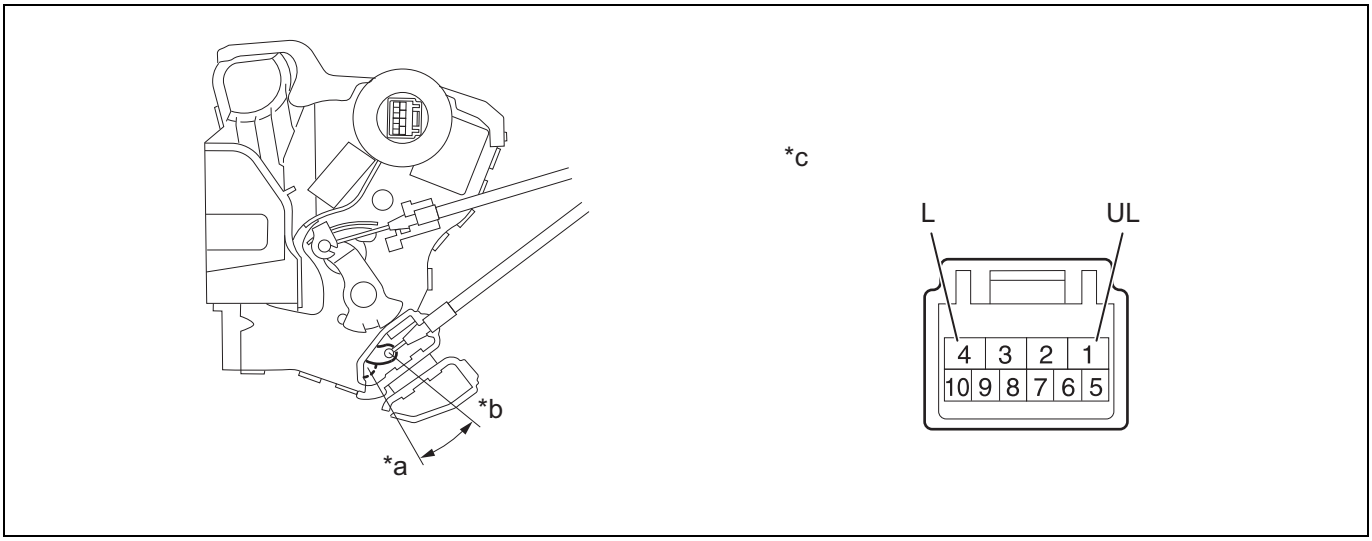

Captions in illustration

*a	Lock
*b	Unlock
*c	Connector not connected (Front door lock ASSY LH (with motor))

(2) Inspection of position switch (with smart entry)

(a)Measure the resistance between terminals when the door lock is operated.

Resistance

Inspection terminals	Inspection conditions	Standard value
7(LSSR) - 8(E)	LOCK	10 kΩ or more
7(LSSR) - 8(E)	UNLOCK	Less than 1 Ω

2. Inspection of front door lock ASSY RH (with motor)

(1) Operation check of door lock

(a)Check the door lock operation when battery voltage is applied to each terminal of the connector.

Criteria

Battery connection	Door lock operation
Battery positive →4(L) Battery negative →1(UL)	LOCK
Battery positive →1(UL) Battery negative →4(L)	UNLOCK

DL

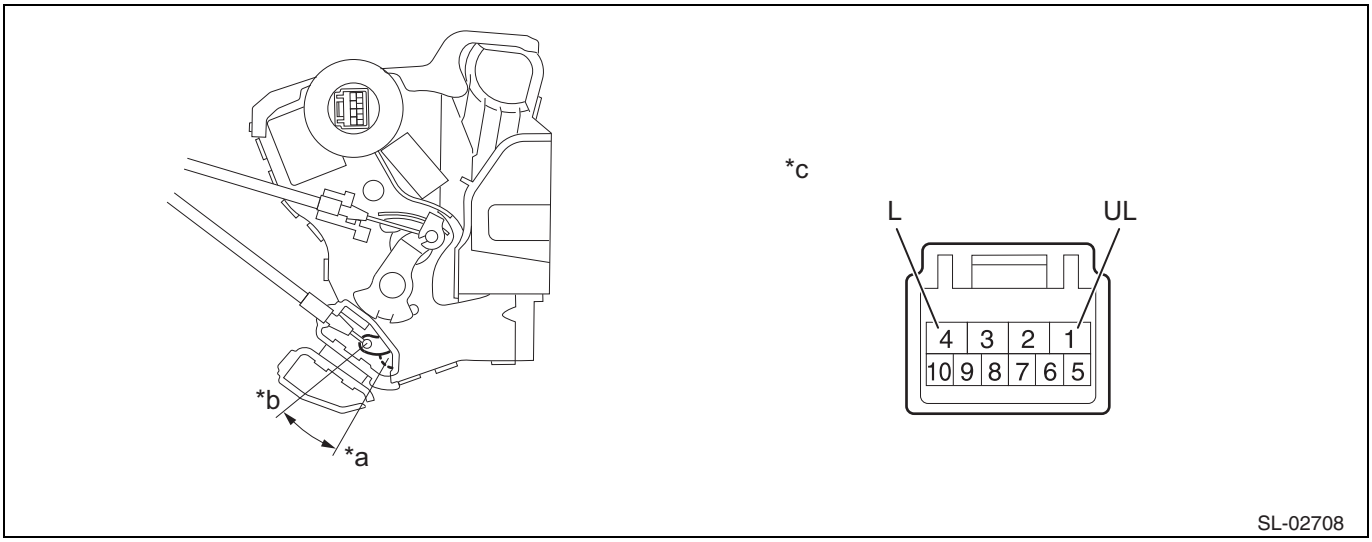

DL

Captions in illustration

*a	Lock
*b	Unlock
*c	Connector not connected (Front door lock ASSY RH (with motor))

(2) Inspection of position switch (with smart entry)

(a)Measure the resistance between terminals when the door lock is operated.

Resistance

Inspection terminals (Terminal symbol)	Inspection conditions	Standard value
7(E) - 8(LSSR)	LOCK	10 kΩ or more
7(E) - 8(LSSR)	UNLOCK	Less than 1 Ω

Trunk panel lock ASSY

Exploded view

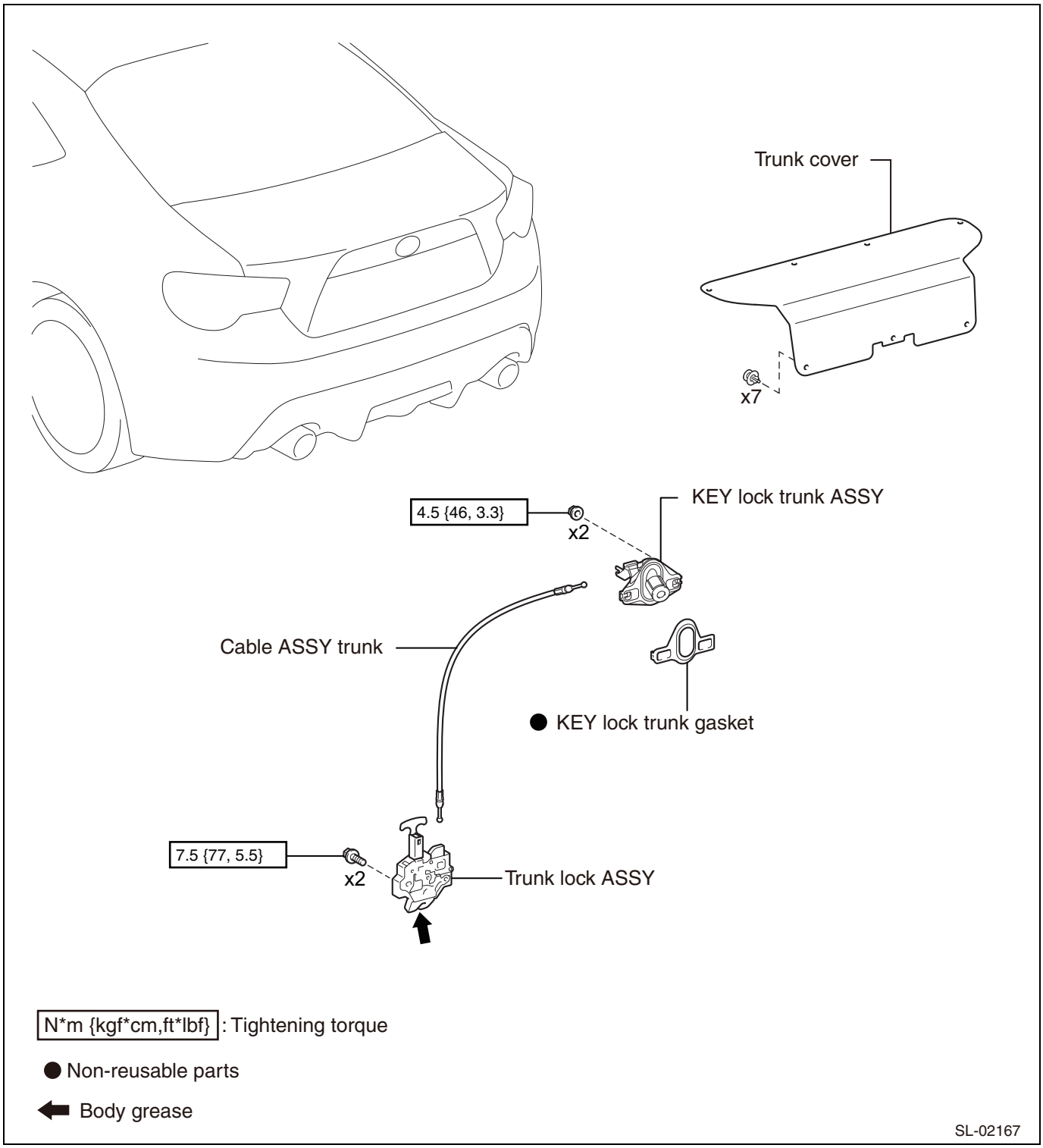

Removal

1. Removal of trunk cover (Refer to DH - 61)

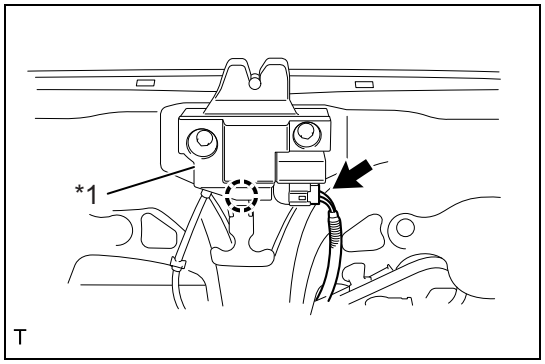

2. Removal of trunk lock ASSY
   (1) Disconnect the connector.

Captions in illustration

*1	Cover

   (2) Release the claws, and open the cover.

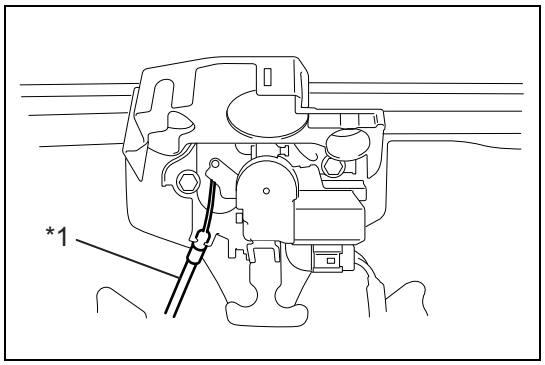

   (3) Disconnect the cable ASSY trunk.

Captions in illustration

*1	Cable ASSY trunk

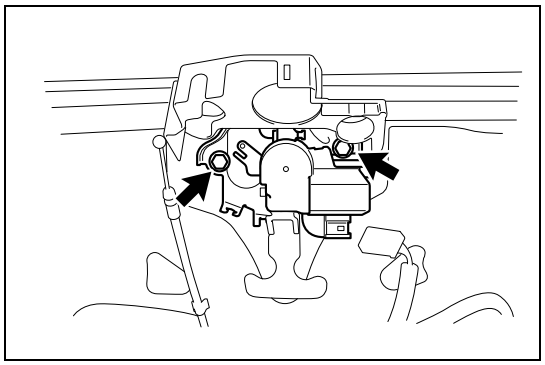

   (4) Remove two bolts and remove the trunk lock ASSY.

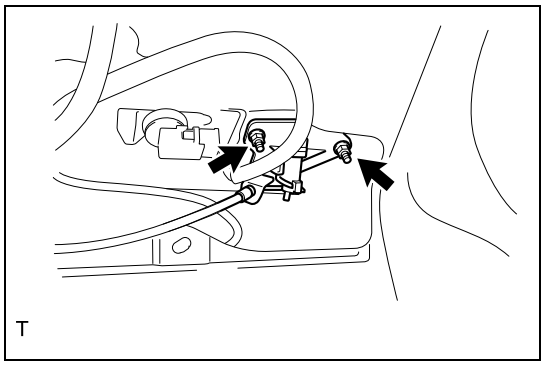

3. Removal of KEY lock trunk
   (1) Remove 2 nuts and remove the KEY lock trunk.

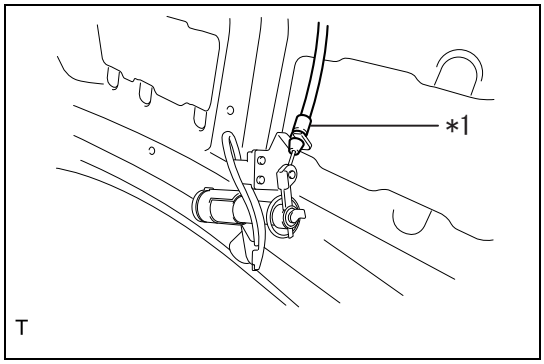

(2) Disconnect the cable ASSY trunk.

Captions in illustration

*1	Cable ASSY trunk

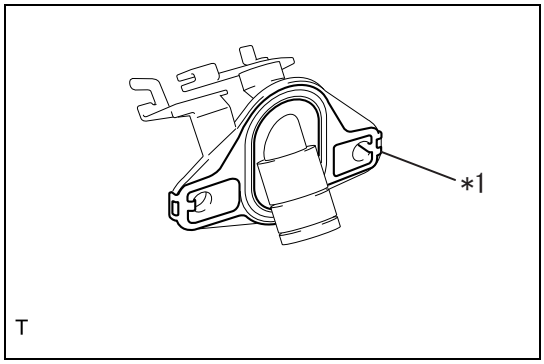

4. Removal of KEY lock trunk gasket
   (1) Remove the KEY lock trunk gasket.

Captions in illustration

*1	KEY lock trunk gasket

CAUTION:
To prevent water entry, replace the KEY lock trunk gasket with a new one once it is removed.

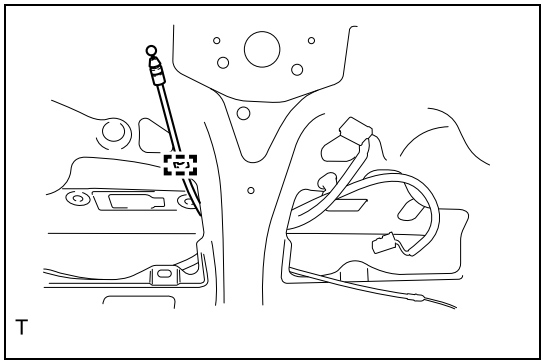

5. Removal of cable ASSY trunk
   (1) Release the clamp and remove the cable ASSY trunk.

Installation

1. Installation of cable ASSY trunk
   (1) Engage the clamp and install the cable ASSY trunk.
2. Installation of KEY lock trunk gasket
   (1) Install a new KEY lock trunk gasket.
   CAUTION:
   To prevent water entry, replace the KEY lock trunk gasket with a new one once it is removed.
3. Applying of body grease
   (1) Apply body grease to the sliding surface of the KEY lock trunk.
4. Installation of KEY lock trunk
   (1) Connect the cable ASSY trunk.
   (2) Using 2 nuts, install the KEY lock trunk.
   Standard value:T=4.5N·m {46kgf·cm} {3.3ft·lbf}
5. Installation of trunk lock ASSY
   (1) Using two bolts, install the trunk lock ASSY to the trunk panel.
   Standard value:T=7.5N·m {77kgf·cm} {5.5ft·lbf}
   (2) Connect the cable ASSY trunk to the trunk lock ASSY.
   (3) Engage the claw and close the cover.
   (4) Connect the connector.
6. Installation of the trunk cover (Refer to DH - 62)

Unit inspection

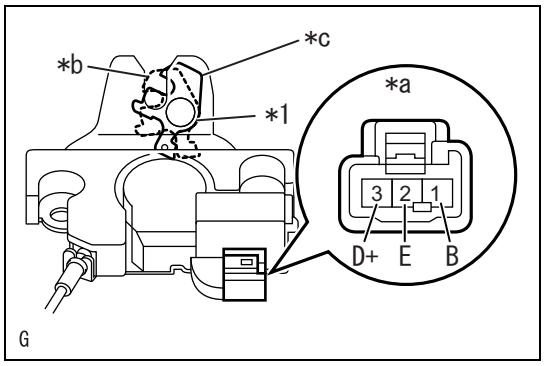

1. Inspection of trunk lock ASSY
   (1) Operation check of trunk lock ASSY
      (a)Set the latch of the trunk lock ASSY to the lock position.
      (b)Check the motor operation when battery voltage is applied between the terminals of the connector.

Criteria

Battery connection	Door lock operation
Battery positive →1 (B) Battery ground →2 (E)	Lock →Open

   (2) Inspection of trunk lock ASSY courtesy switch
      (a)Measure the resistance between the terminals.

Resistance

Inspection terminals	Inspection conditions	Standard value
Tester positive →2(E) Tester negative →3(D+)	Locked	10 kΩ or more
	Open	Less than 1 Ω

DL

Captions in illustration

*1	Latch
*a	Connector not connected (trunk lock ASSY)
*b	Lock position
*c	Open position

Door control receiver

Exploded view

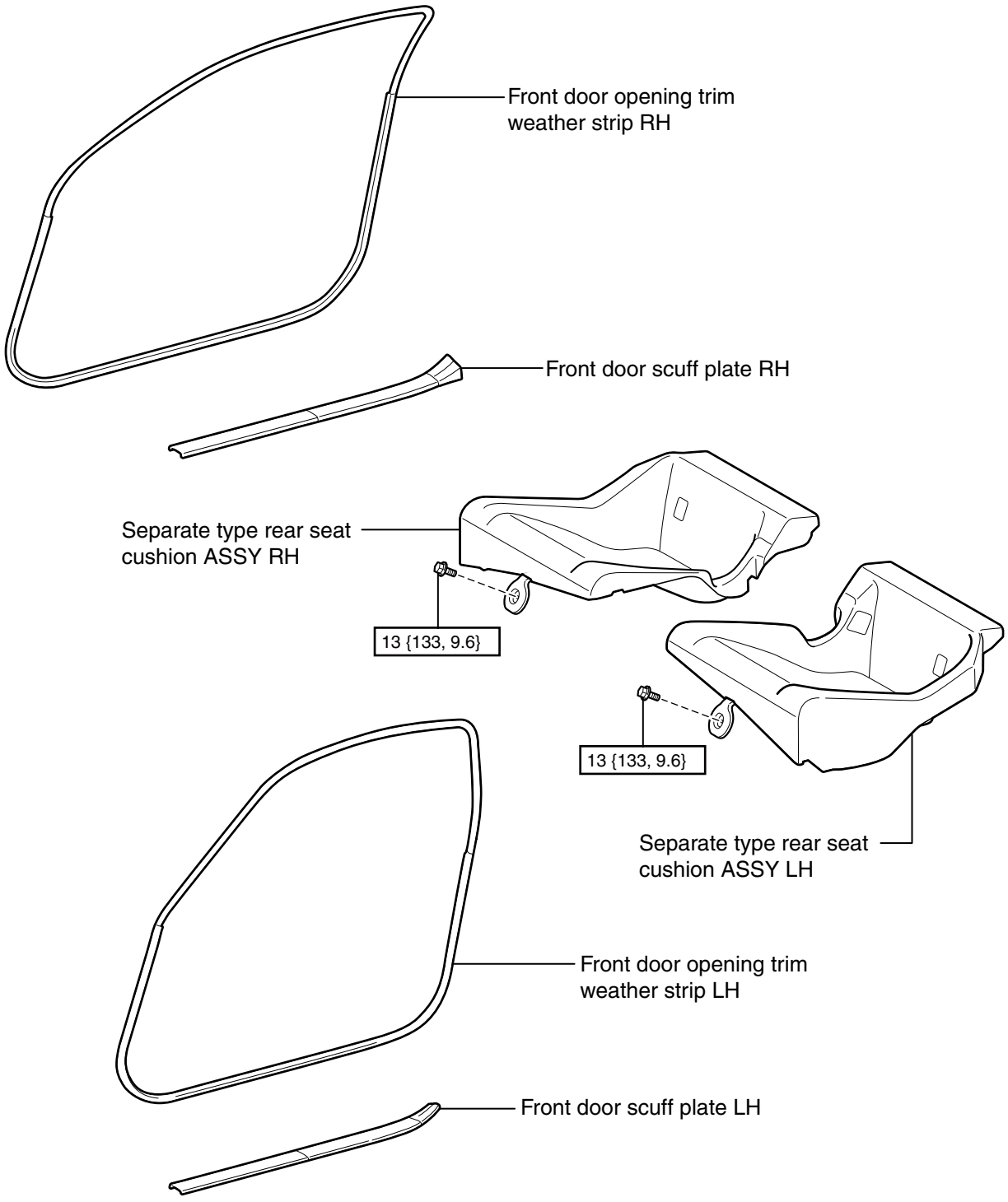

N•m {kgf•cm, ft•lbf} : Tightening torque

SL-01977

DL

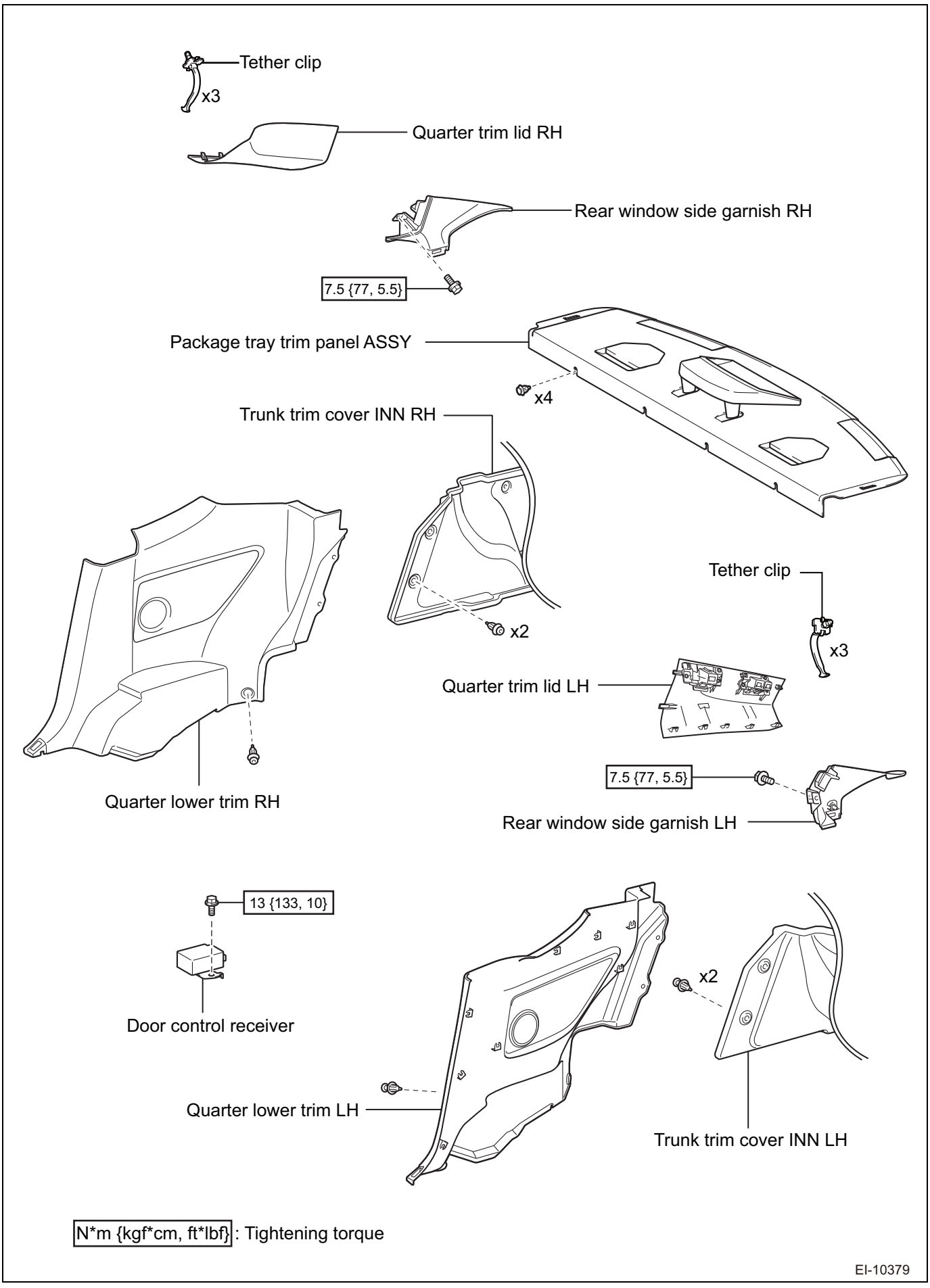

N*m {kgf*cm, ft*lbf}: Tightening torque

EI-10379

Removal

1. Removal of separate type rear seat cushion ASSY RH (Refer to SE - 31)
2. Removal of separate type rear seat cushion ASSY LH
   NOTE:
   Remove the part in the same manner as RH side.
3. Removal of the front door scuff plate RH (Refer to IT - 48)
4. Removal of front door scuff plate LH
   NOTE:
   Remove the part in the same manner as RH side.
5. Removal of front door opening trim weather strip RH (Refer to IT - 48)
6. Removal of front door opening trim weather strip LH
   NOTE:
   Remove the part in the same manner as RH side.
7. Disconnection of trunk trim cover INN RH (Refer to IT - 49)
8. Disconnection of trunk trim cover INN LH
   NOTE:
   Disconnect in the same manner as RH side.
9. Removal of quarter lower trim RH (Refer to IT - 49)
10. Removal of quarter lower trim LH
    NOTE:
    Remove the part in the same manner as RH side.
11. Removal of quarter trim lid RH (Refer to IT - 49)
12. Removal of quarter trim lid SUB-ASSY LH
    NOTE:
    Remove the part in the same manner as RH side.
13. Removal of the rear window side garnish RH (Refer to IT - 50)
14. Removal of the rear window side garnish LH
    NOTE:
    Remove the part in the same manner as RH side.

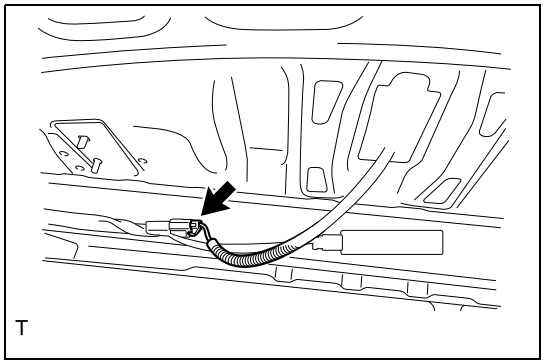

15. Removal of package tray trim panel ASSY
    (1) Disconnect the connector.

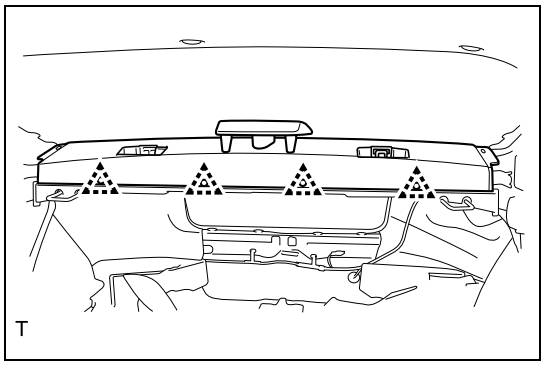

    (2) Remove the 4 clips.

DL

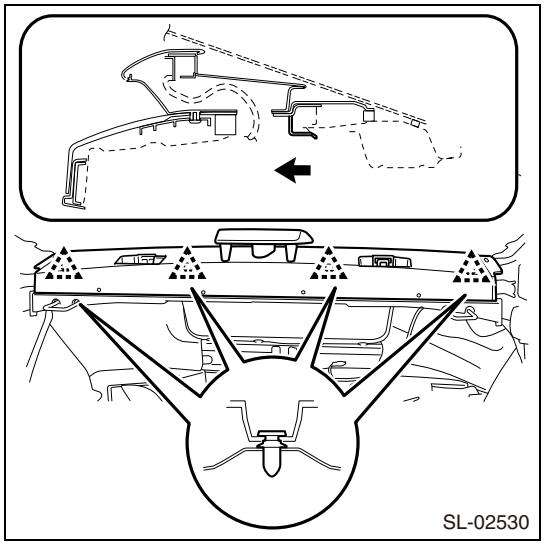

(3) Release the four clips and remove the package tray trim panel ASSY and center stop light ASSY as a single unit by pulling them toward you.

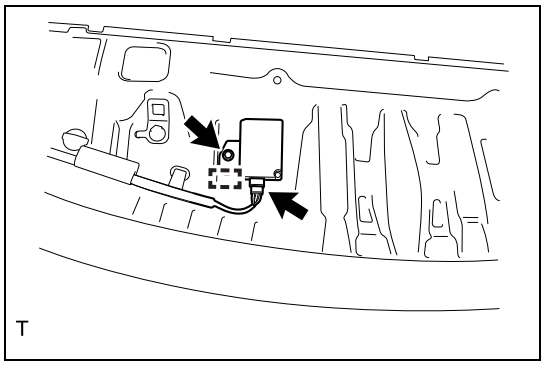

16. Removal of door control receiver
    (1) Disconnect the connector.
    (2) Remove the bolt.
    (3) Remove the guide and remove the door control receiver.
    CAUTION:
    Do not drop or apply strong impact to the door control receiver.

Installation

1. Installation of door control receiver.
    (1) Insert the guide.
    (2) Install the door control receiver using bolts.
    Standard value:T=13N·m {133kgf·cm} {9.6ft·lbf}
    (3) Connect the connector.
    CAUTION:
    - Do not use a door control receiver that has been dropped or exposed to strong impact.
    - When a wiring harness comes close to the door control receiver, the wireless performance of smart entry & start system may decrease. So, when replacing or inspecting the door control receiver and the wiring harness, do not change the route and length of the wiring harness.
2. Installation of package tray trim panel ASSY
    (1) Hook tabs to the panel and engage the four clips to install the package tray trim panel ASSY and center stop light ASSY as a single unit.
    (2) Install the 4 clips.
    (3) Connect the connector.
3. Installation of the rear window side garnish RH (Refer to IT - 57)
4. Installation of rear window side garnish LH
    NOTE:
    Install the part in the same manner as RH side.
5. Installation of the quarter trim lid RH (Refer to IT - 57)
6. Installation of quarter trim lid SUB-ASSY LH
    NOTE:
    Install the part in the same manner as RH side.
7. Installation of the quarter lower trim RH (Refer to IT - 58)

8. Installation of quarter lower trim LH
   NOTE:
   Install the part in the same manner as RH side.
9. Installation of trunk trim cover INN RH (Refer to IT - 58)
10. Installation of the trunk trim cover INN LH
    NOTE:
    Install the part in the same manner as RH side.
11. Installation of the front door opening trim weather strip RH (Refer to IT - 58)
12. Installation of front door opening trim weather strip LH
    NOTE:
    Install the part in the same manner as RH side.
13. Installation of the front door scuff plate RH (Refer to IT - 58)
14. Installation of front door scuff plate LH
    NOTE:
    Install the part in the same manner as RH side.
15. Installation of separate type rear seat cushion ASSY RH (Refer to SE - 39)
16. Installation of separate type rear seat cushion ASSY LH
    NOTE:
    Install the part in the same manner as RH side.

Wireless door lock buzzer

Exploded view

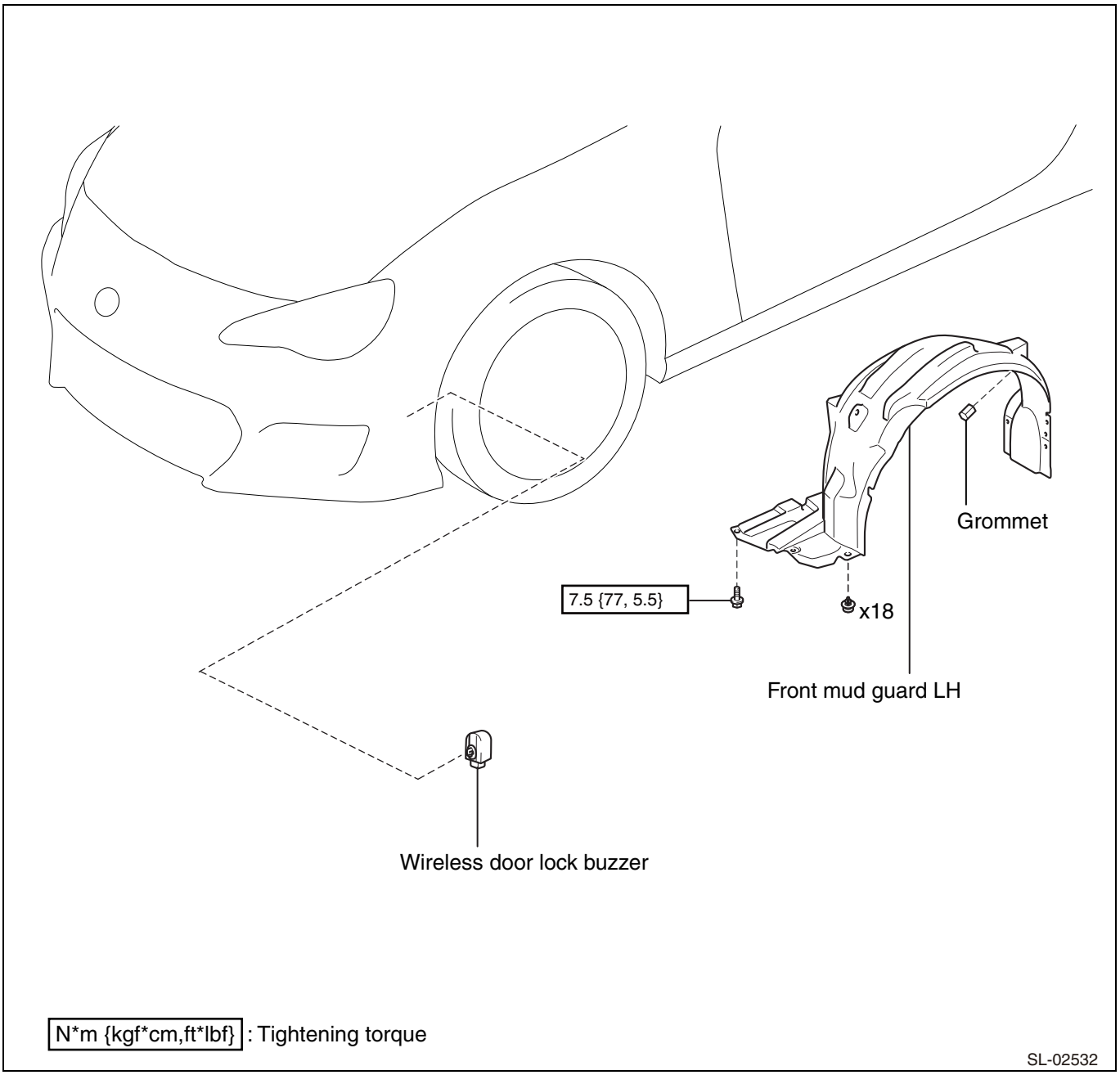

Removal

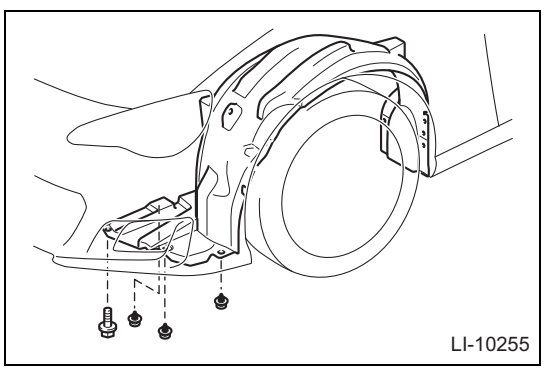

1. Turn over the front mud guard LH.
   (1) Remove the bolt.
   (2) Using a clip remover, remove the 3 clips and turn over the front mud guard LH.

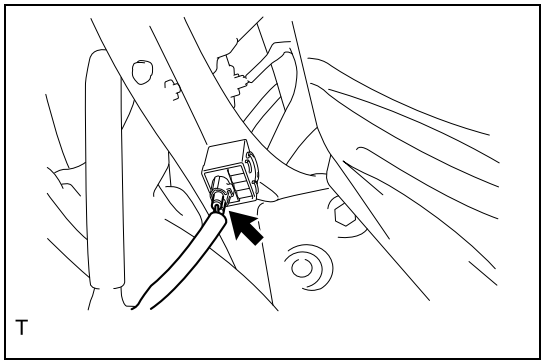

2. Removal of wireless door lock buzzer
   (1) Disconnect the connector.

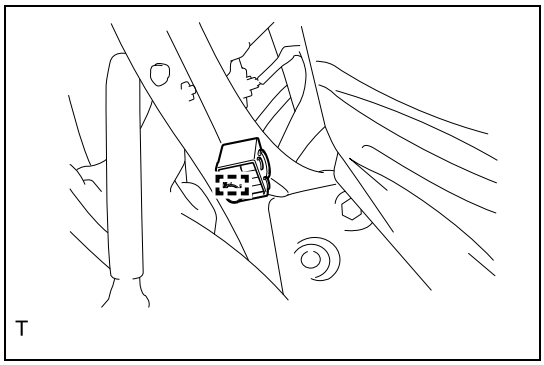

   (2) Release the clamp and remove the wireless door lock buzzer.

Installation

1. Installation of wireless door lock buzzer
   (1) Engage the clamp and install the wireless door lock buzzer.
   (2) Connect the connector.
2. Installation of the front mud guard LH
   (1) Using 3 clips, install the front mud guard LH.
   (2) Install the bolt.
   Standard value:T=7.5N·m {77kgf·cm} {5.5ft·lbf}

DL

Anti-theft system / smart entry & start system

Entry & start system (entry function)

Precautions TD-5
PARTS LOCATION TD-8
Circuit figure TD-11
Description of functions TD-16
How to proceed with troubleshooting TD-27
Operation check TD-31
Customize parameters TD-37
Problem symptoms table TD-39
ECM terminal arrangement TD-40
Diagnosis system TD-52
DTC check / clear TD-52
Data monitor / active test TD-53
DIAGNOSTIC TROUBLE CODE CHART TD-59
B27A1 . . . . . TD-59
B27A2 . . . . . TD-64
B27A5 . . . . . TD-68
B27A6 . . . . . TD-71
B27A7 . . . . . TD-75
B27A8 . . . . . TD-79
The exterior alarm and answer-back buzzer of the smart entry system do not go off TD-82
Neither smart lock nor smart unlock operation works on any of the doors (wireless function does not work either) TD-84
Neither smart lock nor smart unlock operation works from any of the doors (but the wireless function works) TD-92
Smart unlock operation does not work from the driver's door (but smart lock operation works) TD-97
Smart unlock operation does not work on the passenger's door (but smart lock operation works) TD-101
Neither smart lock nor smart unlock operation works on the driver's door TD-104
Neither smart lock nor smart unlock operation works on the passenger's door TD-108
Smart lock operation does not work on the driver's door (but smart unlock operation works) TD-111
Smart lock operation does not work on the passenger's door (but smart unlock operation works) TD-115
Interior collation is NG TD-118
Smart trunk open operation does not work (when the transmitter is located outside trunk) TD-125
The smart key lockout protection function for the trunk does not work (trunk does not open) TD-131
The internal alarm of the smart entry system does not go off TD-135

Entry & start system (start function)

Parts location TD-136
Circuit figure TD-139

Description of functions TD-144
How to proceed with troubleshooting TD-146
Function inspection TD-150
Customize parameters TD-155
Problem symptoms table TD-156
ECM terminal arrangement TD-156
Diagnosis system TD-161
DTC check / clear TD-161
Data monitor / active test TD-162
DIAGNOSTIC TROUBLE CODE CHART TD-172
B2271 . . . . . TD-174
B2274 . . . . . TD-177
B2275 . . . . . TD-181
B2276 . . . . . TD-183
B2277 . . . . . TD-185
B2282 . . . . . TD-186
B2283 . . . . . TD-186
B2284 . . . . . TD-191
B2285 . . . . . TD-194
B2286 . . . . . TD-198
U0073 . . . . . TD-202
U0100 . . . . . TD-202
U0101 . . . . . TD-202
U0122 . . . . . TD-202
U0140 . . . . . TD-202
U0155 . . . . . TD-202
U0401 . . . . . TD-202
U0422 . . . . . TD-202
The engine does not start TD-204
The power does not turn on (does not change to both ACC ON or IG ON) TD-219
The power does not turn ON (power status changes to ACC ON but not to IG ON) TD-227
The power does not turn ON (power status changes to IG ON but not to ACC ON) TD-231

Engine immobilizer system (with entry & start system)

Precautions TD-233
Parts location TD-233
Circuit figure TD-235
Description of functions TD-237
How to proceed with troubleshooting TD-237
Problem symptoms table TD-240
ECM terminal arrangement TD-241
Diagnosis system TD-248
DTC check / clear TD-250
Data monitor / active test TD-250
DIAGNOSTIC TROUBLE CODE CHART TD-255
B1571 . . . . . TD-255
B1572 . . . . . TD-256
B1576 . . . . . TD-261
B1577 . . . . . TD-262
B2784 . . . . . TD-263
B278A TD-266
B278D TD-268
Security indicator does not blink TD-269

TD

Engine immobilizer system (without entry & start system)
Parts location TD-273
Circuit figure TD-275
Description of functions TD-276
How to proceed with troubleshooting TD-277
Problem symptoms table TD-279
ECM terminal arrangement TD-279
DTC check / clear TD-282
Data monitor / active test TD-283
DIAGNOSTIC TROUBLE CODE CHART TD-284
B1401 . . . . . TD-284
B1402 . . . . . TD-285
B1405 . . . . . TD-286
B1406 . . . . . TD-287
B1407 . . . . . TD-288
B1408 . . . . . TD-288
B1409 . . . . . TD-289
B1410 . . . . . TD-293
B1411 . . . . . TD-298
B1570 . . . . . TD-299
B1571 . . . . . TD-300
B1572 . . . . . TD-301
B1576 . . . . . TD-305
B1577 . . . . . TD-306
B1578 . . . . . TD-307
Security indicator does not blink TD-310

Auto alarm system
Parts location TD-315
Circuit figure TD-317
Description of functions TD-320
How to troubleshoot TD-322
Customize function TD-324
Symptom table TD-325
ECM terminal arrangement TD-326
Diagnosis system TD-327
Data monitor / active test TD-328
Horn circuit TD-328
ECM power supply circuit TD-330

Electrical oscillator key (for front floor)
Exploded view TD-333
Removal TD-333
Installation TD-333

Electrical oscillator key (for rear floor)
Exploded view TD-334
Removal TD-334
Installation TD-334

Electrical oscillator key (for the trunk room)
Exploded view TD-335
Removal TD-335
Installation TD-335

Electrical oscillator key (for outside of the trunk room)
Exploded view TD-336

Removal TD-336
Installation TD-336

Transponder key amplifier

Exploded view TD-337
Removal TD-337
Installation TD-337

Entry & start system (entry function)

Precautions

1. Notes on replacing the ECM
   CAUTION:
   When replacing the collation ECM (smart key ECM ASSY), it is also necessary to prepare all the electrical key transmitter SUB-ASSYs.
   (1) When you replace the ID code box (immobilizer code ECM)*, collation ECM (smart key ECM ASSY), steering lock actuator ASSY (steering lock ECM), the ECM, or the electrical key transmitter SUB-ASSY, refer to the "Registration manual for immobilizer".
   *: The ID code box is included.
   (2) If you replace the collation ECM (smart key ECM ASSY), the registered steering lock position will not match the one registered in the steering lock actuator ASSY (steering lock ECM). Due to this, you might not be able to start the engine. To avoid this, you need to perform the following steps after replacing the collation ECM (smart key ECM ASSY):
   (a)Move the shift lever in position P*.
   *: for automatic transmission
   (b) With the power mode in IG OFF, open and then close a door, and start the engine.
2. Notes for registration
   (1) When replacing any of the following parts, refer to the "Registration manual for immobilizer".
   (a)ID code box (immobilizer code ECM)*
   (b)Collation ECM (smart key ECM ASSY)
   (c)Steering lock actuator ASSY (steering lock ECM)
   (d)Electrical key transmitter SUB-ASSY
   *: The ID code box is included.
3. Notes on removing the cable from the battery ground terminal
   (1) If you disconnect the battery cable and then reconnect it afterwards, the entry unlock function might not work. In this case, the entry unlock function returns by performing the wireless door lock and unlock.
4. Notes on the vehicle battery and the battery integrated into the electrical key transmitter SUB-ASSY
   (1) While doors are locked, radio waves are transmitted from the vehicle, which means that power is constantly supplied from the battery. If the vehicle is left in this state for a prolonged period of time, the battery can become completely drained. If the vehicle is not to be used for a long time, the battery must be disconnected, or the entry & start system (entry function) must be cancelled.
   NOTE:
   To cancel the entry & start system (entry function), refer to the steps described below.
   (Refer to TD - 37)
   (2) If the doors are locked and the electrical key transmitter SUB-ASSY is located within the detection area of the electrical key antenna, there is regular communication between the electrical key transmitter SUB-ASSY and the vehicle, causing battery output. If the vehicle is not in use, the electrical key transmitter SUB-ASSY must be kept outside a 2 m (6.56 feet) radius of the vehicle.
5. Notes on the electrical key transmitter SUB-ASSY
   NOTE:
   Figures concerning the electrical key transmitter SUB-ASSY are given in "Parts location".
   (Refer to TD - 8)
   (1) The electrical key transmitter SUB-ASSY is a delicate device. Observe the following precautions in handling the electrical key transmitter SUB-ASSY:
   (a)Do not subject the electrical key transmitter SUB-ASSY to strong impact.
   (b)Do not leave the electrical key transmitter SUB-ASSY in high-temperature locations for a prolonged period of time.
   (c)Do not wash the electrical key transmitter SUB-ASSY in an ultrasound bath.
   (d)Do not use the electrical key transmitter SUB-ASSY with a magnetized key ring.
   (e)Do not place the electrical key transmitter SUB-ASSY near devices emitting low-frequency electromagnetic waves, such as a digital audio player, induction cooking equipment, or a magnetic medical device.
   (f) Do not apply a sticker or the like on the electrical key transmitter SUB-ASSY.
6. Notes on inspecting the entry & start system (entry function)
   (1) General notes on the entry & start system (entry function)

(a)Always carry the electrical key transmitter SUB-ASSY with you.

(2) Under the conditions described below, the key detection area might become smaller, or the electrical key transmitter SUB-ASSY might not be detected properly. These problems arise when the reception of electromagnetic waves used for key detection becomes weak.
(a)The battery is drained.
(b)There is a facility that produces strong radio waves nearby, such as a TV tower, a power plant, a TV station, or a gas station.
(c)The electrical key transmitter SUB-ASSY is carried along with a wireless communication device, such as a transceiver, a cell phone, a cordless telephone, a digital audio player, or a portable game system.
(d)The electrical key transmitter SUB-ASSY is located under a metal object such as a coin or a special type of a card, or is in contact with such an object.
(e)A metal film is applied over the rear glass of the vehicle.
(f) A radio wave type keyless entry system is being used nearby.
(g)A vehicle using an electrical key transmitter SUB-ASSY is located nearby.
(h)The electrical key transmitter SUB-ASSY is located near a device producing high voltage or electrical noise.
(i) The electrical key transmitter SUB-ASSY is near an electronic device, such as a charger.

(3) The operating range of the entry & start system (entry function):
(a)Due to the design of the body, there are certain places where the system might not work properly.
(b)Even when the electrical key transmitter SUB-ASSY is located within the key detection area outside the vehicle, it might not be detected properly if it is used near the window, the outer door handle, or the center of the bumper.
(c)Even when the electrical key transmitter SUB-ASSY is located within the key detection area inside the vehicle, it might not be detected properly if it is located on the instrument panel, inside the accessory box of the instrument panel, inside or near the front cup holder, inside the glove compartment, on the package tray trim, or on the floor.
(d)If held improperly, the electrical key transmitter SUB-ASSY may not work properly.

(4) If using a pacemaker, it may affect the pacemaker. If this might be the case, the instruction manual supplied with the pacemaker must be consulted carefully.
(a)The entry & start system (entry function) does not work under the following circumstances:
1. The entry & start system (entry function) is being cancelled.
2. Electrical key transmitter SUB-ASSY
The battery is drained (the LED on the electrical key transmitter SUB-ASSY does not blink when the switch is pressed).

7. Notes on the entry unlock function

(1) When you perform an entry unlock operation, make sure to touch the unlock sensor located on the back side of the front door outer handle ASSY.

(2) Touching the unlock sensor located on the back side of the front door outer handle ASSY wearing a glove or the like could result in slow system response.

(3) After performing an entry unlock operation, confirm that the door has been unlocked and open it by pulling the front door outer handle ASSY.

(4) If you approach the vehicle too quickly or pull the front door outer handle ASSY too quickly, you might fail to open the door. In this case, return the front door outer handle ASSY to its original position, then pull it again. The door will then open. (If the system could not detect the unlock operation, it will automatically repeat the unlock operation 4 times.)

(5) If you move the electrical key transmitter SUB-ASSY to the front door outer handle ASSY too quickly, you might fail to unlock the door by the entry unlock function.

(6) While the electrical key transmitter SUB-ASSY is located within the detection area outside the vehicle, a door can be unlocked by anyone (even those who do not hold the electrical key transmitter SUB-ASSY) who grabs the front door outer handle ASSY. Note that the unlock operation works only on a door for which a code match is detected. (While the electrical key transmitter SUB-ASSY is located within the detection area outside the driver's door, grabbing the driver's side front door outside handle ASSY unlocks the door, but grabbing the passenger's side front door outside handle ASSY does not unlock the door.)

(7) If you do not open the door after unlocking it, the door will be automatically locked in approximately 30 seconds.*
NOTE:
*: If the door is automatically locked after an elapse of a certain period of time from the entry unlock operation performed with the electrical key transmitter SUB-ASSY located near the vehicle, the electrical key transmitter SUB-ASSY will be detected as being inside the vehicle. As a result, the lockout protection function kicks in to unlock the door.

(8) If a large amount of water is sprinkled over the front door outer handle ASSY during car wash, heavy rain, or the like when the electrical key transmitter SUB-ASSY is located inside the detection area outside the vehicle, the sensor or the entry unlock function might become activated. If, however, a door is not opened within 30 seconds, it will be locked automatically.*

NOTE:

*: If the door is automatically locked after an elapse of a certain period of time from the entry unlock operation performed with the electrical key transmitter SUB-ASSY located near the vehicle, the electrical key transmitter SUB-ASSY will be detected as being inside the vehicle. As a result, the key lock-in prevention function kicks in to unlock the door.

(9) If the electrical key transmitter SUB-ASSY is carried along with an electrical key transmitter SUB-ASSY of another vehicle supporting an entry & start system, it might take longer than usual to unlock a door by an entry unlock operation.

8. Notes on the entry lock function

(1) If you touch the front door outer handle ASSY too quickly during an entry lock operation, you might fail to lock the door.

(2) If the electrical key transmitter SUB-ASSY is brought near the vehicle (near the window or the front door outer handle ASSY), the entry lock function might not work. In addition, the anti-lockout alarm might go off, disabling the entry unlock operation. If this is the case, move the electrical key transmitter SUB-ASSY away from the vehicle (the window or the front door outer handle ASSY) and perform an entry lock operation.

(3) If you carry the electrical key transmitter SUB-ASSY and if you attempt to lock any door while it is open (not properly closed), a warning will be activated to remind you that the door is open.

(4) If the electrical key transmitter SUB-ASSY is placed on the instrument panel, inside the glove compartment, or on the floor, the anti-lockout alarm (which reminds you that the electrical key transmitter SUB-ASSY is left inside the vehicle) might not go off. In this case, you can end up locking the door with the electrical key transmitter SUB-ASSY left inside the vehicle. Make sure to always carry the electrical key transmitter SUB-ASSY with you.

(5) After locking a door using an entry lock or wireless lock operation, you have to wait approximately 3 seconds before you can perform an entry unlock operation.

PARTS LOCATION

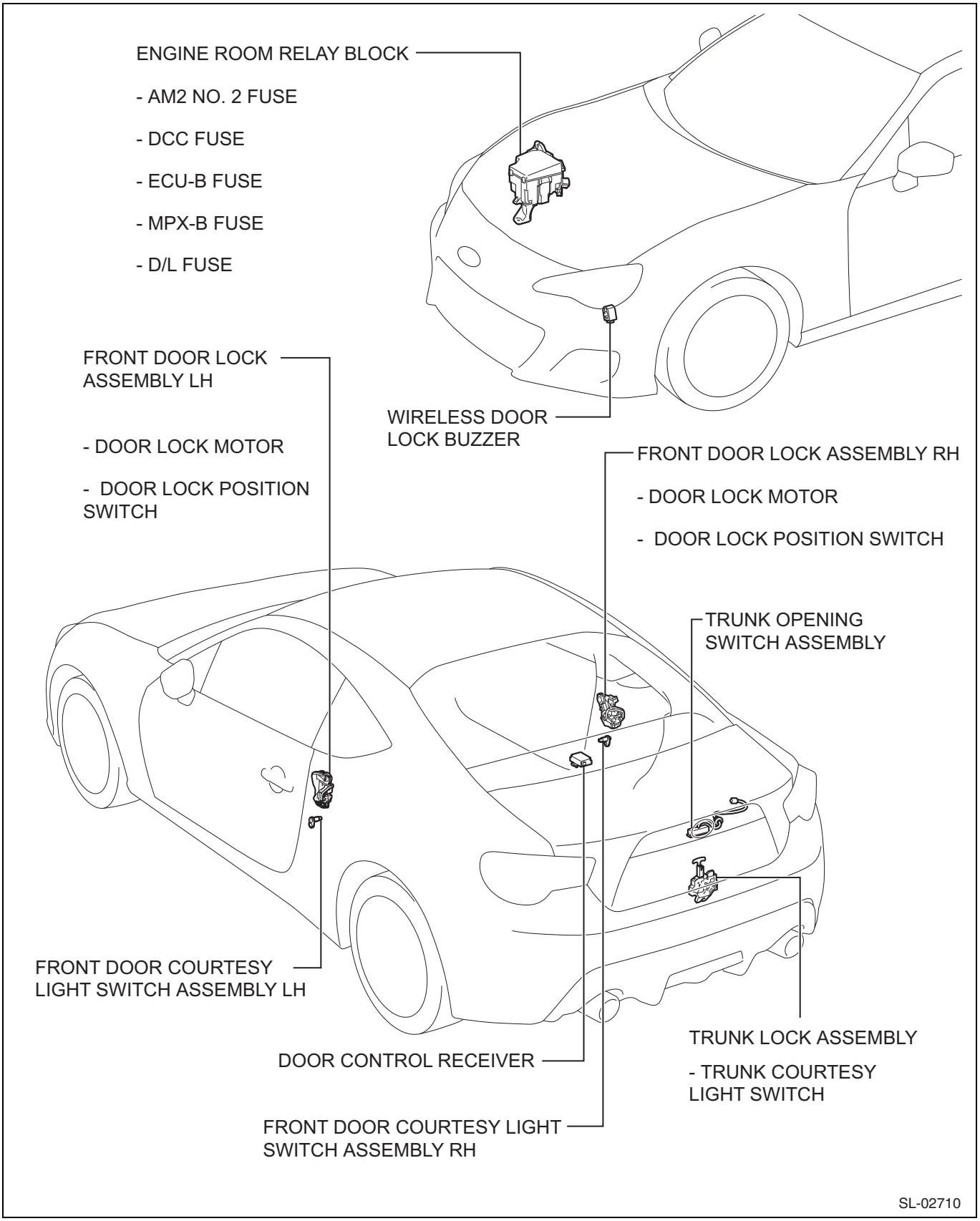

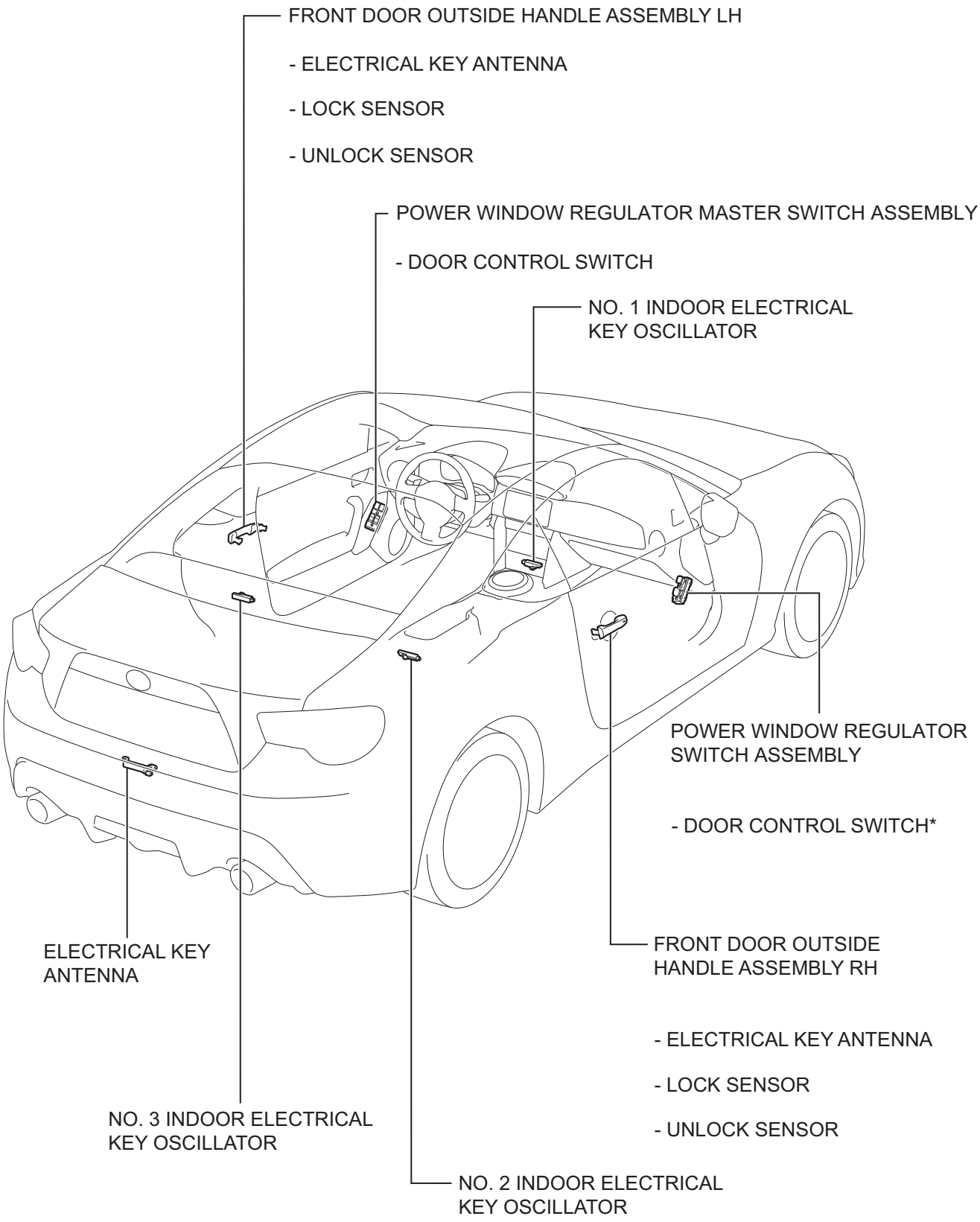

*: w/ Passenger Side Door Control Switch

SL-10329

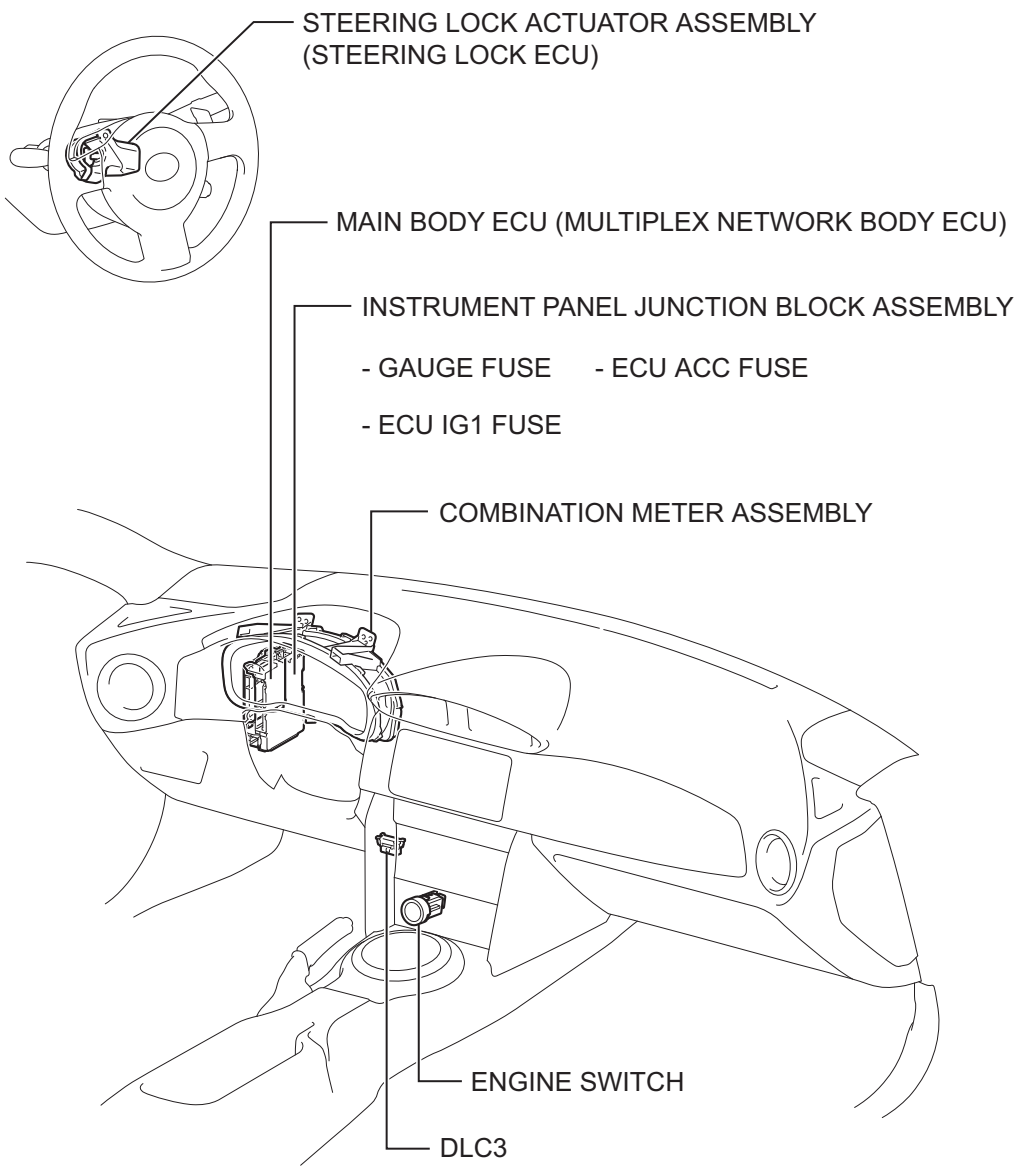

ID CODE BOX (IMMOBILISER CODE ECU)*

CERTIFICATION ECU (SMART KEY ECU ASSEMBLY)

REFER TO THE “REGISTRATION MANUAL FOR IMMOBILIZER” FOR ATTACHMENT POSITION.

*: w/ ID Code Box

SL-02137

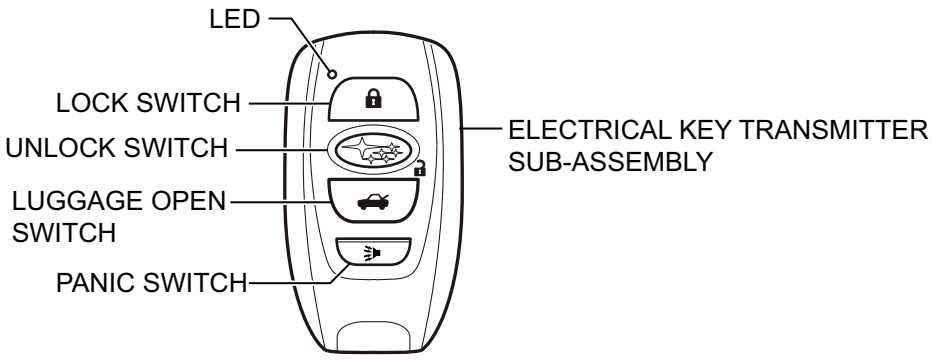

Circuit figure

1. This figure summarizes the collation ECM (smart key ECM ASSY) system.

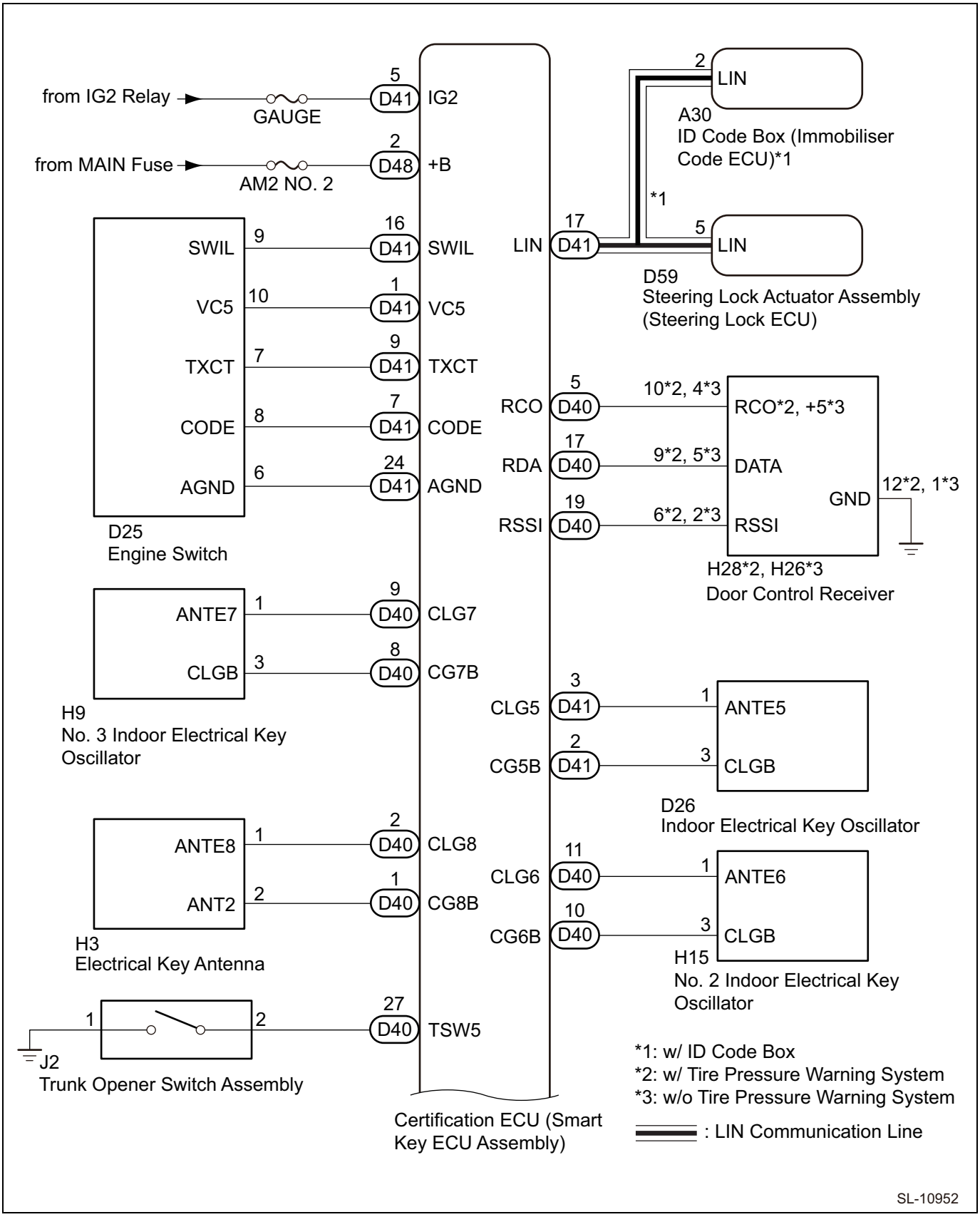
from IG2 Relay
GAUGE
5
D41
IG2
from MAIN Fuse
AM2 NO. 2
2
D48
+B
SWIL
9
16
D41
SWIL
VC5
10
1
D41
VC5
TXCT
7
9
D41
TXCT
CODE
8
7
D41
CODE
AGND
6
24
D41
AGND
D25
Engine Switch
ANTE7
1
9
D40
CLG7
CLGB
3
8
D40
CG7B
H9
No. 3 Indoor Electrical Key Oscillator
ANTE8
1
2
D40
CLG8
ANT2
2
1
D40
CG8B
H3
Electrical Key Antenna
1
2
27
D40
TSW5
J2
Trunk Opener Switch Assembly
Certification ECU (Smart Key ECU Assembly)
2
LIN
A30
ID Code Box (Immobiliser Code ECU)*1
*1
LIN
17
D41
5
LIN
D59
Steering Lock Actuator Assembly (Steering Lock ECU)
RCO
5
D40
10*2, 4*3
RCO*2, +5*3
RDA
17
D40
9*2, 5*3
DATA
GND
12*2, 1*3
RSSI
19
D40
6*2, 2*3
RSSI
H28*2, H26*3
Door Control Receiver
CLG5
3
D41
1
ANTE5
CG5B
2
D41
3
CLGB
D26
Indoor Electrical Key Oscillator
CLG6
11
D40
1
ANTE6
CG6B
10
D40
3
CLGB
H15
No. 2 Indoor Electrical Key Oscillator
*1: w/ ID Code Box
*2: w/ Tire Pressure Warning System
*3: w/o Tire Pressure Warning System
: LIN Communication Line
SL-10952

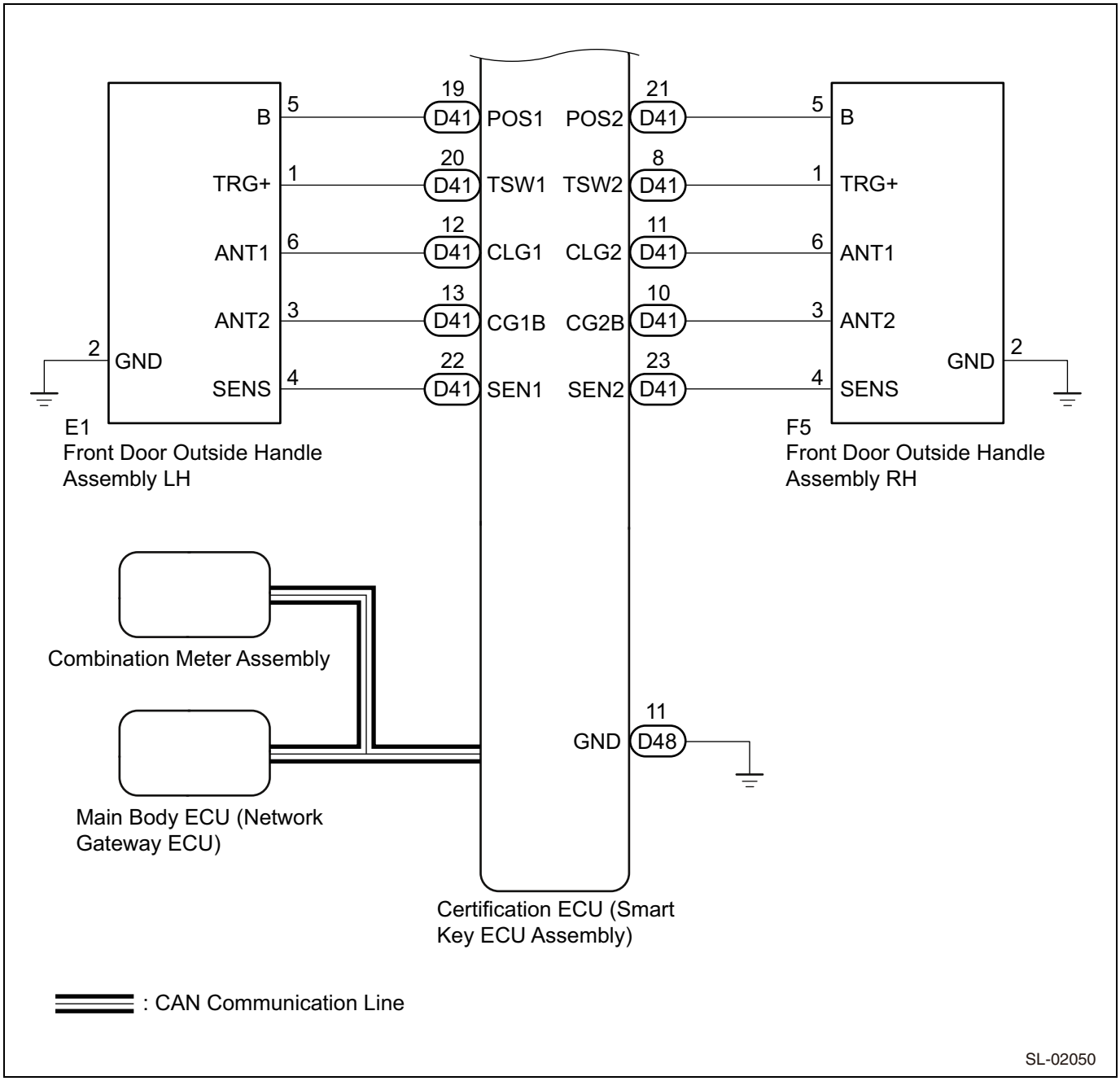

2. This figure summarizes the main body ECM (multiplex network body ECM) system.

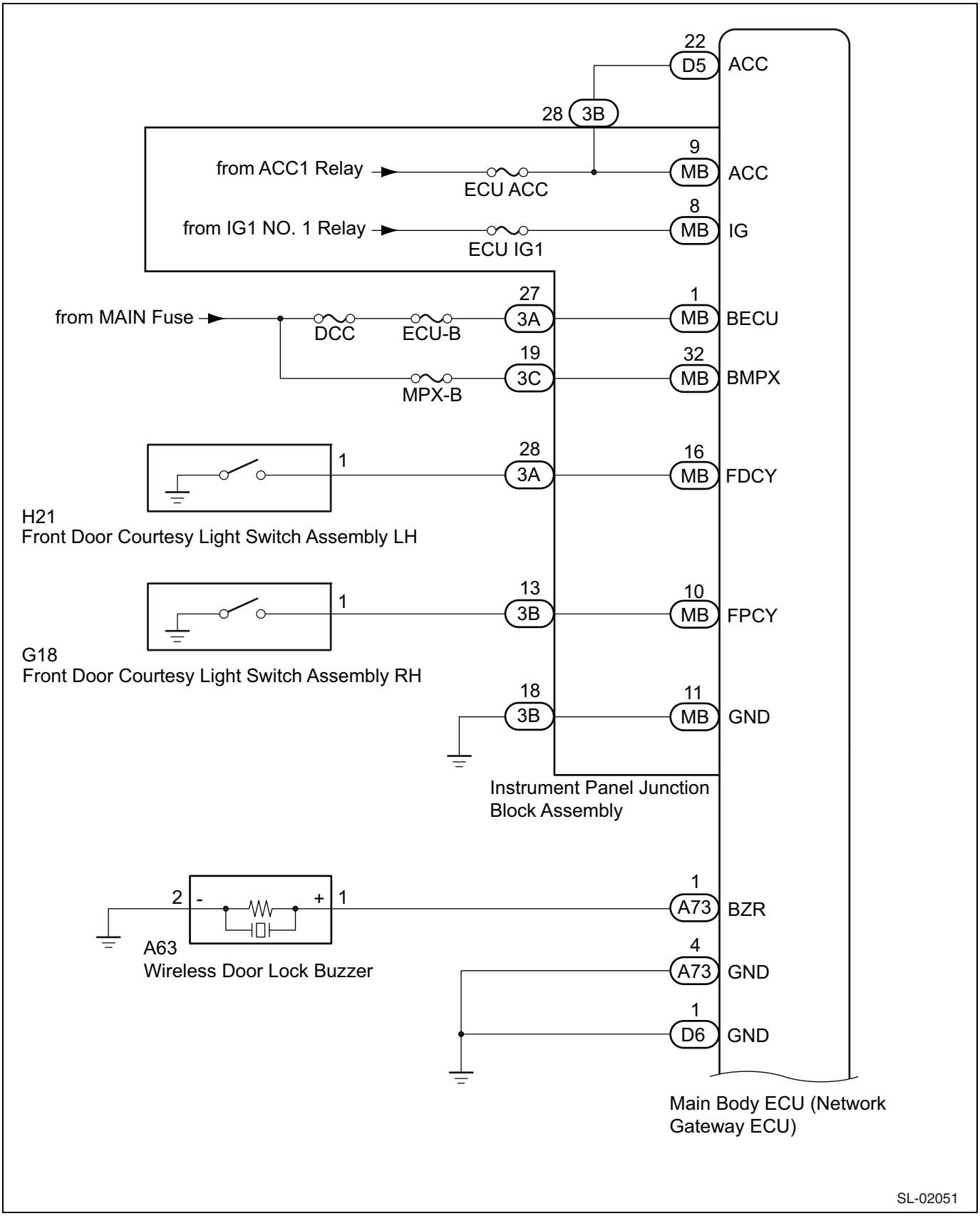
22
D5
ACC
28
3B
9
MB
ACC
from ACC1 Relay
ECU ACC
8
MB
IG
from IG1 NO. 1 Relay
ECU IG1
27
3A
1
MB
BECU
from MAIN Fuse
DCC
ECU-B
19
3C
32
MB
BMPX
MPX-B
TD
1
28
3A
16
MB
FDCY
H21
Front Door Courtesy Light Switch Assembly LH
1
13
3B
10
MB
FPCY
G18
Front Door Courtesy Light Switch Assembly RH
18
3B
11
MB
GND
Instrument Panel Junction
Block Assembly
2
-
+
1
1
A73
BZR
A63
Wireless Door Lock Buzzer
4
A73
GND
1
D6
GND
Main Body ECU (Network
Gateway ECU)
SL-02051

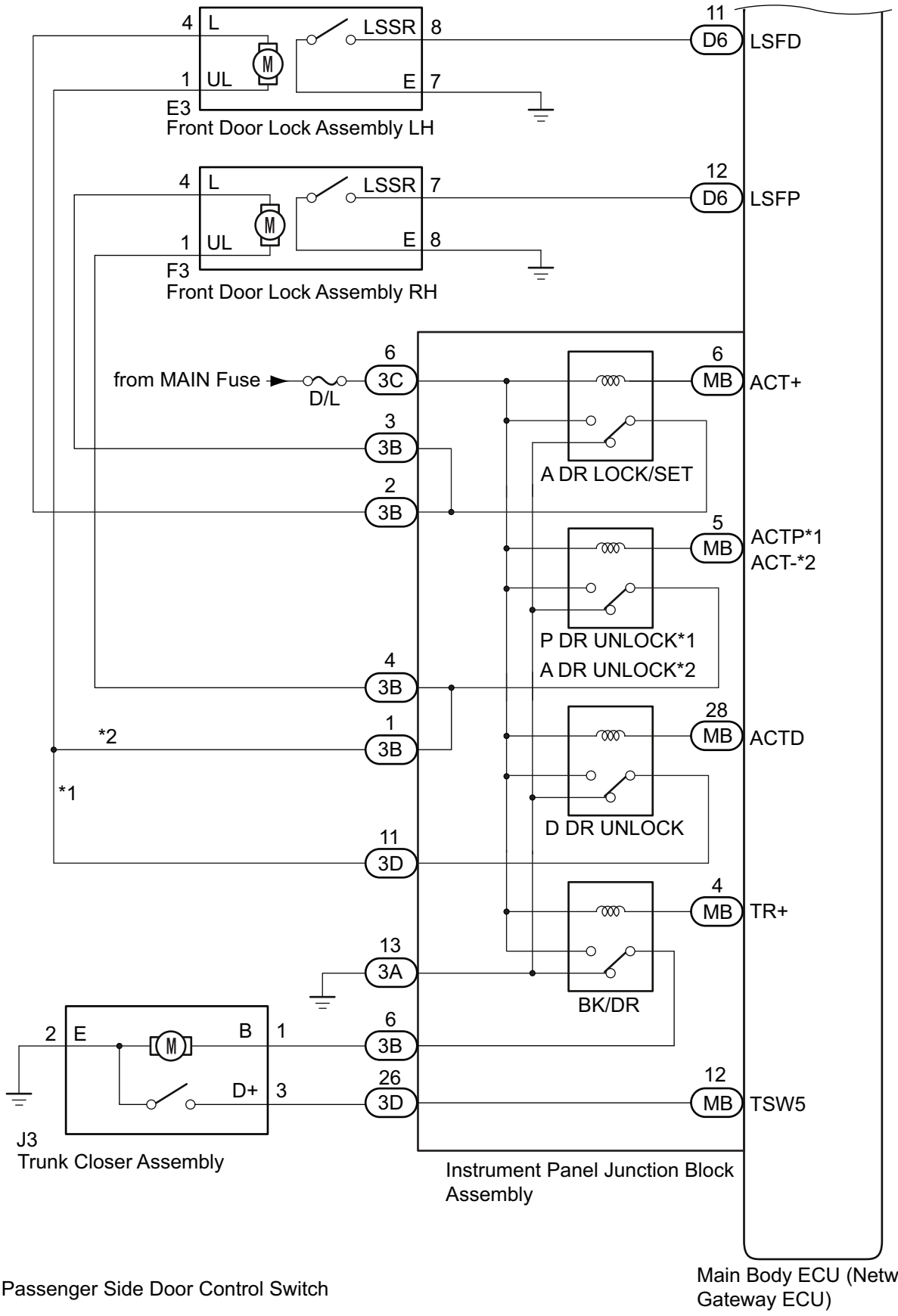

*1: w/ Passenger Side Door Control Switch

*2: w/o Passenger Side Door Control Switch

SL-02139

TD

Parts	Function
Front door outer handle ASSY LH/RH	Upon reception of a request signal transmitted from the collation ECM (smart key ECM ASSY) via the electrical key antenna, the front door outer handle ASSY LH/RH creates a detection area outside the vehicle. When replacing the collation ECM (smart key ECM ASSY), it is also necessary to replace all the electrical key transmitter SUB-ASSYs. The front door outer handle ASSY LH/RH transmits a door lock sensor operation signal to the collation ECM (smart key ECM ASSY) (entry lock function). The front door outer handle ASSY LH/RH detects the operation performed on itself via the touch sensor, and transmits a signal to the collation ECM (smart key ECM ASSY) (entry unlock function).
Indoor electrical key antenna ASSY no. 1 (front floor), indoor electrical key antenna ASSY no. 2 (rear floor)	Receive request signals from the collation ECM (smart key ECM ASSY), and form the vehicle interior detection area.
Indoor electrical key antenna ASSY No. 3 (trunk)	Upon reception of a request signal transmitted from the collation ECM (smart key ECM ASSY), the indoor electrical key antenna ASSY no. 3 (trunk) creates a detection area inside the trunk.
Electrical key antenna (trunk exterior)	Upon reception of a request signal transmitted from the collation ECM (smart key ECM ASSY), the electrical key antenna (trunk exterior) creates a detection area outside the trunk.
Trunk opening switch ASSY	The trunk door opening switch ASSY transmits a switch operation signal to the collation ECM (smart key ECM ASSY).
Door control receiver	The door control receiver receives an entry & start system code / wireless code transmitted from the electrical key transmitter SUB ASSY and then transmits it to the collation ECM (smart key ECM ASSY).
Wireless door lock buzzer	This warning buzzer is activated by the collation ECM (smart key ECM ASSY).
Electrical key transmitter SUB-ASSY	Sends the ID code when it receives a request signal.
Collation ECM (smart key ECM ASSY)	The collation ECM (smart key ECM ASSY) transmits a request code to each electrical key antenna. It identifies and checks the ID code transmitted from the electrical key transmitter SUB ASSY and then transmits a signal to an appropriate ECM according to the function operated. When an ignition operation is performed, the collation ECM (smart key ECM ASSY) exchanges encrypted codes with the steering lock ECM (steering lock actuator ASSY).* 1 When an ignition operation is performed, the collation ECM (smart key ECM ASSY) exchanges encrypted codes with the ID code box (immobilizer code ECM).* 2

*1: Without ID code box

*2: With ID code box

Description of functions

1. Description of functions

   The following terminology is used: "Operation" refers to the user operation performed via the entry & start system. "Expected vehicle behavior" refers to how a typical existing vehicle reacts in response to a specific operation. "Possible cause/diagnosis" points to a possible cause of failure and a diagnostic clue when the vehicle does not respond as expected.

   (1) Example: Operation no.

Operation	-
Expected vehicle behavior	-
Waveform or output value	-

Possible cause	Diagnosis
-	-

2. Basic notes

   (1) You can check DTCs and an ECM data list for the entry & start system by using the SSM4. [Starter Request Signal] (an item under [Data monitor]) indicates the engine start request signal output.

   (2) To check DTCs, follow the steps shown below. If DTCs are displayed, diagnose them first.

   (a) Connect the SSM4 to the DLC3.

   (b) Turn the ignition switch to ON.

   (c) Enter the following menus: [Each System] →[Keyless Access(Collation ECM)] →[DTC]

   (d) Enter the following menus: [Each System] →[Engine Control System] →[DTC]

(3) If the selection made in the customize setting for the entry & start system has been cancelled, cancel the entry cancel setting (refer to TD - 37).

3. System diagram

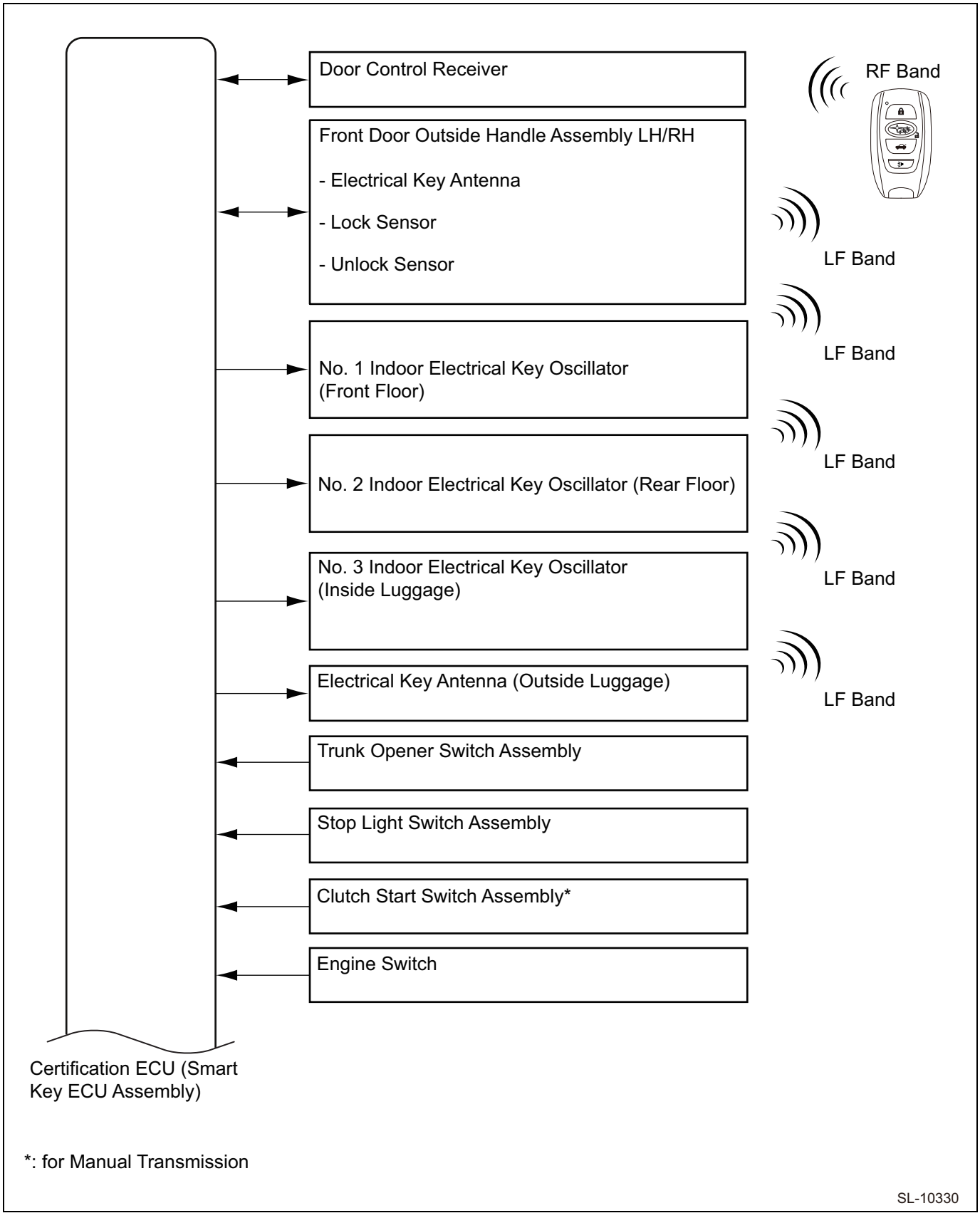

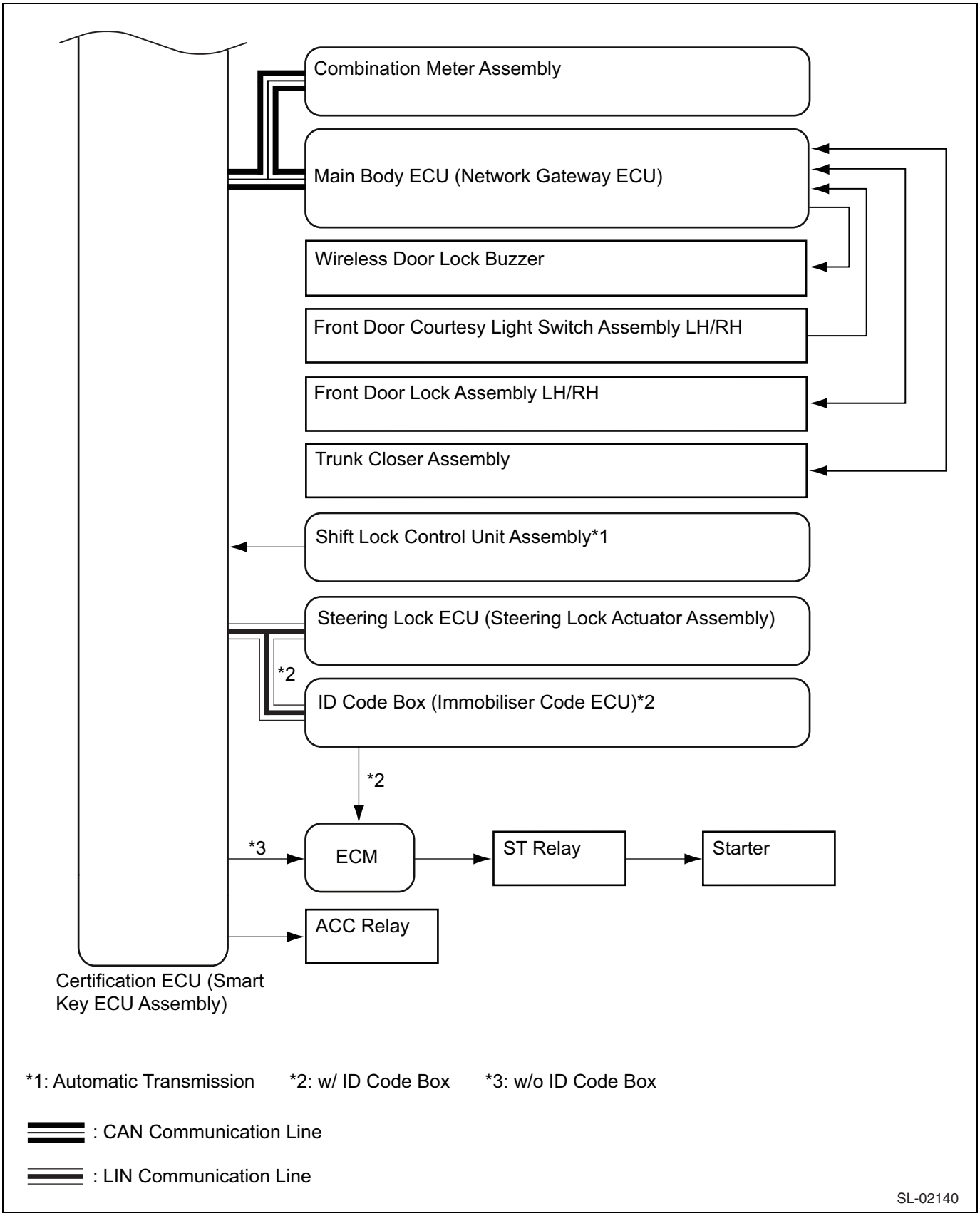

4. Diagnostic procedure based on user operation
   (1) Operation 1

Operation	Change the power mode to IG OFF, lock all doors, and stand 3 m or more away from the vehicle carrying the electrical key transmitter SUB-ASSY with you. NOTE: An LF band request signal is output every 0.25 seconds, which prompts each electrical key antenna (exterior antenna) to create a detection area. Each front door outer handle ASSY (electrical key antenna) creates an approximately 0.7 m wide detection area.
Waveform or output value	Pulse generation (D41-12 (CLG1) - D48-11 (GND)*)

NOTE:

*: (Refer to TD - 40)

(2) Operation 2

Operation	Carrying the electrical key transmitter SUB-ASSY with you, stand 0.7 m away from the driver's door. NOTE: If the electrical key transmitter SUB-ASSY is inside the detection area, and if the key ID transmitted to the electrical key transmitter SUB-ASSY matches that stored in the collation ECM (smart key ECM ASSY), the system enters unlock standby mode. If you touch the unlock sensor with your hand when the system is in unlock standby mode, the door unlocks. Signal transmission: Collation ECM (smart key ECM ASSY) →front door handle ASSY (electrical key antenna) →electrical key transmitter SUB-ASSY →door control receiver →collation ECM (smart key ECM ASSY) →body ECM
Expected vehicle behavior	The LED on the electrical key transmitter SUB-ASSY blinks. If the LED does not blink, one of the parts listed in the table below might be faulty.
Waveform or output value	• Pulse generation (D41-12 (CLG1) - D48-11 (GND)*) • Pulse generation (D40-17 (RDA) - D48-11 (GND)*) • Pulse generation (D40-19 (RSSI) - D48-11 (GND)*)

TD

NOTE:

*: (Refer to TD - 40)

Possible cause	Diagnosis
Electrical key transmitter SUB-ASSY	• The key ID code transmitted by the electrical key transmitter SUB-ASSY does not match the one stored in the collation ECM (smart key ECM ASSY). Check the operation using another electrical key transmitter SUB-ASSY. • If the LED on the electrical key transmitter SUB-ASSY does not blink in the 0.7 m (2.3 feet) wide area beside the driver's door, perform the following: – Check the operation by pressing the lock/unlock button on the electrical key transmitter SUB-ASSY. If the door can lock/unlock, it means that a detection area has not been created. If this is the case, the problem is located in parts other than the electrical key transmitter SUB-ASSY or the door control receiver. • If the electrical key transmitter SUB-ASSY is faulty, you can neither start the engine nor change the power mode to ACC ON or IG ON. Normally, if you move the shift lever in P*1 and press the engine switch using the electrical key transmitter SUB-ASSY from the driver's seat without depressing the brake pedal*1 or the clutch pedal*2, the smart key indicator on the combination meter ASSY blinks green. If the door does not open, use the mechanical key integrated into the electrical key transmitter SUB-ASSY to open the door. – *1: With automatic transmission – *2: With manual transmission NOTE: Before replacing the electrical key transmitter SUB-ASSY, check if the transmitter battery is not drained.
The transmitter battery is drained.	• Hold down the lock switch on the electrical key transmitter SUB-ASSY for 5 seconds and check how many times the LED blinks. If the LED does not blink, or blinks only once or twice, the transmitter battery might be drained. If the LED does not blink at all, the electrical key transmitter SUB-ASSY might be faulty. • If the transmitter battery voltage drops to 2.1 V or less before the electrical key transmitter SUB-ASSY starts transmitting a signal, [Yes] is displayed for [Key Low Battery] (an item under [Data monitor]). • If the transmitter battery voltage drops to 2.0 or less, you cannot perform any operation. NOTE: In low temperature environment, output from the electrical key transmitter SUB-ASSY decreases. • If the transmitter battery is drained, you can neither start the engine nor change the power mode to ACC ON or IG ON. To forcibly start the engine under this condition, place the electrical key transmitter SUB-ASSY over the engine switch. • Identify the type of the transmitter battery and check if it is installed properly.
External radio waves	• If a problem occurs only in certain places or at certain times, it is likely the effect of radio wave interference. • If the electrical key transmitter SUB-ASSY is faulty, it is probably due to the following reasons: the transmitter battery is drained; an electrical key transmitter SUB-ASSY of another vehicle is used, or; the electrical key transmitter SUB-ASSY is exposed to external radio waves. [Yes] may be displayed on the following items for [Data monitor]. [Unmatched Vehicle-ID], [No Response], [Unmatch Code or Form], or [ID Code Difference (Resp)
Collation ECM (smart key ECM ASSY)	-

Possible cause	Diagnosis
Front door outer handle ASSY	A detection area is not properly created outside the vehicle. • If the electrical key transmitter SUB-ASSY does not blink when it is located 0.7 m away from the driver's side front door outer handle ASSY but blinks when it is located 0.7 m away from the passenger's side front door outer handle ASSY, the driver's side front door outer handle ASSY might be faulty. • Even when a detection area is not properly created outside the vehicle, you can start the engine by turning the engine switch ON (ACC). • By using the SSM4, you can check if a detection area has been created outside the vehicle. (Refer to TD - 31) • Even when a detection area is not properly created outside the vehicle, you can unlock a door by pressing the unlock button on the electrical key transmitter SUB-ASSY.
Door control receiver	• If the door control receiver is faulty, you cannot lock and unlock the doors by a touch sensor operation. • If the door control receiver is faulty, you cannot lock and unlock the doors by a wireless unlock operation. • If the door control receiver is faulty, you can neither start the engine nor change the power mode to IG ON or ACC ON unless you perform an emergency operation. • By using the SSM4, you can check if a detection area has been created outside the vehicle. (Refer to TD - 31)
The vehicle battery is discharged.	You can check if the vehicle battery is discharged by operating the horn.
Other	• If the entry function has been cancelled using the customize function, a detection area will not be created. Therefore, the LED on the electrical key transmitter SUB-ASSY does not blink even when you move the electrical key transmitter SUB-ASSY towards the front door outer handle ASSY. • When the entry & start system is enabled, leaving the electrical key transmitter SUB-ASSY in a detection area created outside a vehicle door could cause the transmitter battery to become discharged. Therefore, if the electrical key transmitter SUB-ASSY is left in this state for 10 minutes or longer, the entry & start system automatically disables the detection area outside the vehicle where the electrical key transmitter SUB-ASSY is located. • If you inadvertently leave the electrical key transmitter SUB-ASSY inside the vehicle, and then use another electrical key transmitter SUB-ASSY to lock a door, the LED on the second electrical key transmitter SUB-ASSY does not blink even when you move it toward the passenger's side front door outer handle ASSY.

TD

(3) Operation 3

Operation	Carrying the electrical key transmitter SUB-ASSY with you, and making sure that it is inside the detection area created outside the vehicle, touch the unlock sensor on the driver's door.
Expected vehicle behavior	As the door unlocks, you get an answer-back. If this does not happen, one of the parts listed in the table below might be faulty.
Waveform or output value	• Pulse generation (D41-12 (CLG1) - D48-11 (GND)*) • Tester conditions: Body ECM, instrument panel junction block ASSY*

NOTE:
*: (Refer to TD - 40)

Possible cause	Diagnosis
Same failure locations as those shown under Operation 2, for cases in which the LED on the electrical key transmitter SUB-ASSY does not blink	-
Front door outer handle ASSY (unlock sensor)	• If you can unlock the door by touching the passenger's side unlock sensor carrying the electrical key transmitter SUB-ASSY with you, the driver's side unlock sensor might be faulty. • In normal operation, if you touch the unlock sensor, [ON] is displayed for [D-Door Touch Sensor] (an item under [Data monitor]).
Door lock/unlock function	If you cannot lock/unlock a door by operating the door control switch inside the vehicle, the door lock function might be faulty.

(4) Operation 4

Operation	Get on the vehicle carrying the electrical key transmitter SUB-ASSY with you, close the door, move the shift lever in P*1, and then press the engine switch once without depressing the brake pedal*1 or the clutch pedal*2.

Expected vehicle behavior	• The smart indicator inside the combination meter ASSY blinks green (blinks slowly), and the engine status changes to ACC ON. • The steering wheel unlocks. If the smart key indicator does not blink, one of the parts listed in the table below might be faulty. NOTE: If you press the engine switch, the indoor electrical key antenna creates a key detection area inside the vehicle to detect the electrical key transmitter SUB-ASSY inside the vehicle. After receiving a request signal, the electrical key transmitter SUB-ASSY transmits an ID code, and the LED on the electrical key transmitter SUB-ASSY blinks for a short period of time. After the engine switch is pressed, if the key ID transmitted by the electrical key transmitter SUB-ASSY matches the one stored in the collation ECM (smart key ECM ASSY), the ACC relay becomes ON, and the smart key indicator on the combination meter ASSY blinks green (blinks slowly). When the power mode changes, the L code and S code*3 check process completes. The steering wheel is then unlocked, and the immobilizer is disabled. The [Immobiliser] status in [Data monitor] is changed from [Set] to [Unset]. Signal transmission: Collation ECM (smart key ECM ASSY) →indoor electrical key antenna →electrical key transmitter SUB-ASSY →door control receiver →collation ECM (smart key ECM ASSY) NOTE: A detection area is created inside the vehicle under the following conditions: • A door is open. • During approximately 30 seconds following the opening/closing of a door • The brake pedal is depressed. • During approximately 30 seconds following the depressing of the brake pedal • Immediately after the engine switch is pressed
Waveform or output value	• Pulse generation (D40-17 (RDA) - D48-11 (GND)*) • Pulse generation (D41-3 (CLG5) - D48-11 (GND)*) • Pulse generation (D59-3 (SLR+) - D59-1 (GND)*)

*1: With automatic transmission

*2: for manual transmission

*3: With ID code box

NOTE:

*: (Refer to TD - 40)

Possible cause	Diagnosis
Collation ECM (smart key ECM ASSY)	-
External radio waves	• If the failure occurs in certain locations or during certain periods of time, it may be due to interference from external radio waves. • If interference from external radio waves is suspected inside the vehicle, remove all connectors from the devices that are not part of the standard equipment, or disconnect or remove electrical devices, to check for the presence of noise.
Indoor electrical key antenna ASSY that creates a detection area inside the vehicle	• If a detection area is not properly created inside the vehicle you can neither start the engine nor change the power mode to ACC ON or IG ON. In the event of an emergency, however, you can forcibly start the engine by placing the electrical key transmitter SUB-ASSY over the engine switch. • Using the SSM4, activate keyless access system check to forcibly create a detection area inside the vehicle. Then, place the electrical key transmitter SUB-ASSY inside the detection area. Short beeps sound. (Refer to TD - 31)
Engine switch	In normal operation, if you press the engine switch, [ON] is displayed for [Start Switch1] and [Start Switch2] (items under [Data monitor]).
ID code box (immobilizer code ECM) *1	[OK] must be displayed for [S Code Check] (an item under [Data monitor]). If [OK] is displayed for [S Code Check], it means that the collation ECM (smart key ECM ASSY) code matches the ID code box (immobilizer code ECM) code.
Neutral start switch ASSY *2	In normal operation, if you move the shift lever in P, [ON] is displayed for [Neutral SW/Clutch SW] (an item under [Data monitor]).
Steering lock ECM (steering lock actuator ASSY)	• If [OK] is displayed for [L Code Check] (an item under [Data monitor]) when the power mode is ACC ON, power is supplied to the steering motor for approximately 10 seconds. The ECM then sends an unlock signal to the steering motor. At this moment, the result for [Unlock Request Receive] (an item under [Data monitor]) temporarily changes from [NG] to [OK]. As the steering wheel unlocks, the ECM receives the unlock signal from the steering motor, and the result displayed for [Steering Unlock] (an item under [Data monitor]) changes from [Unset] to [Set]. • With ID code box – In order for the steering wheel to be unlocked, [OK] must be displayed for [L Code Check] under [Data monitor]. This means that the ID code stored in the steering lock ECM (steering lock actuator ASSY) and [S Code Check] (ID code box (immobilizer code ECM)) must match the collation ECM (smart key ECM ASSY) and the ID code box (immobilizer code ECM). • Without ID code box – In order for the steering wheel to be unlocked, [OK] must be displayed for [L Code Check] under [Data monitor]. This means that the ID code stored in the steering lock ECM (steering lock actuator ASSY) must match the one stored in the collation ECM (smart key ECM ASSY).

*1: The ID code box is included.

*2: With automatic transmission

TD

NOTE:
The electrical key transmitter SUB-ASSY, the transmitter battery, and the vehicle battery should already have been inspected during the previous operation procedure. If not, inspect them now.

(5) Operation 5

Operation	Carrying the electrical key transmitter SUB-ASSY with you, move the shift lever in P*1 and depress the brake pedal*1 or the clutch pedal*2.
Expected vehicle behavior	The smart key indicator on the combination meter ASSY lights up green. If the smart key indicator does not light up, one of the parts listed in the table below might be faulty.

*1: With automatic transmission
*2: for manual transmission

Possible cause	Diagnosis
Stop light switch ASSY*1	If the brake pedal is depressed, [ON] is displayed for [Stop Light Switch 1] (an item under [Data monitor]).
Clutch start switch ASSY*2	If the clutch pedal is depressed, [ON] is displayed for [Neutral SW/Clutch SW] (an item under [Data monitor]).
Collation ECM (smart key ECM ASSY)	Start the ECM terminal arrangement. (Refer to TD - 40)

*1: With automatic transmission
*2: for manual transmission

TD

(6) Operation 6

Operation	Get on the vehicle carrying the electrical key transmitter SUB-ASSY with you, move the shift lever in P*1, depress and hold down the brake pedal*1 or the clutch pedal*2, and then press the engine switch.
Expected vehicle behavior	The engine starts. If the engine does not start, one of the parts listed in the table below might be faulty. NOTE: If you press the engine switch with the steering wheel unlocked, a starter drive request signal is output from the starter drive request output terminal of the collation ECM (smart key ECM ASSY). 12 V is then supplied to the starter relay via the starter relay terminal of the ECM.

*1: With automatic transmission
*2: for manual transmission

Possible cause	Diagnosis
Steering lock system	In normal operation, when the steering wheel is unlocked, [ON] is displayed for [Steering Unlock Switch] (an item under [Data monitor]).
Collation ECM (smart key ECM ASSY)	[Starter Request Signal] (an item under [Data monitor]) indicates the engine start request signal output. When [ON] is displayed for this item, it means that the collation ECM (smart key ECM ASSY) is outputting an engine start request signal to the ECM.
ECM	[Starter SW] (an item under [Data monitor]) indicates the starter drive command. If [ON] is displayed for this item, 12V is output from the starter relay terminal, which is then applied to the starter relay.
Starter relay	[Starter Signal] (an item under [Data monitor]) indicates the electrical potential of the starter relay terminal of the ECM. It tells you whether or not voltage is actually applied to the starter relay.
Starter	-
The vehicle battery is discharged.	You can check if the vehicle battery is discharged by simply sounding the horn.

(7) Operation 7

Operation	Press the engine switch.
Expected vehicle behavior	The vehicle turns to IG OFF and the engine stops.

(8) Operation 8

Operation	Open a door.
Expected vehicle behavior	The steering wheel locks. If this does not happen, one of the parts listed in the table below might be faulty.

Possible cause	Diagnosis
Steering lock system	-
Door courtesy light switch ASSY	If any one of the doors opens, [OFF] is displayed for [D Door Courtesy SW] (an item under [Data monitor]).

(9) Operation 9

Operation	Carrying the electrical key transmitter SUB-ASSY with you, touch the lock sensor on the driver's door outer handle.
Expected vehicle behavior	As the door locks, you get an answer-back.

5. Vehicle battery conservation function
   (1) When the entry & start system (entry function) is enabled, the vehicle performs a key detection operation every 0.25 seconds. If the vehicle is left in this state for a prolonged period of time, the battery can become completely drained. The following mechanisms are provided to help reduce battery drainage:
      (a) If the engine is not started for 5 or more days, periodic signal transmission from the electrical key antenna stops. In this event, you can unlock a door by touching the unlock sensor on front door outer handle ASSY.
      (b) If the engine is not started for 14 or more days, the lock/unlock sensor of the passenger's side front door outer handle ASSY is disabled. In this event, you need to use the unlock sensor on the driver's side front door outer handle ASSY to unlock a door.
      (c) If the electrical key transmitter SUB-ASSY is left inside the detection area created outside the vehicle for 10 minutes or more, the exterior electrical key antenna that is detecting the presence of the electrical key transmitter SUB-ASSY is deactivated.
   (2) To restore the entry & start system, perform the following:
      (a) Lock and then unlock the door by touching the lock/unlock sensor on the driver's side front door outer handle ASSY holding the key.
      (b) Once this operation is performed, all doors can be opened and closed.
      (c) Lock and then unlock all doors using a wireless operation.
6. Warning function
   (1) Alarm that goes off when you attempt to get off the vehicle with the shift lever in a position other than P (power deactivation notification) (applicable to automatic transmission only)
      (a) Situation A: An attempt to get off the vehicle was detected (the driver's door opens when the shift lever is in a position other than P).

Item	Contents
Purpose of the warning	• To prevent the vehicle from suddenly moving forward • To prevent the vehicle from being stolen • To prevent the vehicle from moving (to prevent the vehicle from starting moving down a slope or an inclined plane without a driver inside the vehicle)
Warning activation conditions (The warning is activated when all of these conditions are met).	• The power mode is ACC ON or IG ON. • The shift lever is moved to P. • Driver's door is open. • The vehicle is stopped.
Description	• The combination meter ASSY buzzer gives a continuous beeping sound.
Warning deactivation conditions (The warning is deactivated when any one of these conditions is met).	• The power mode is IG OFF. • The shift lever is moved to P. • Driver's door is closed • The vehicle is running.

      (b) Situation B: Under situation A, the driver gets off the vehicle carrying the electrical key transmitter SUB-ASSY, closes the driver's door, and attempts to walk away from the vehicle.

Item	Contents
Purpose of the warning	• To prevent the vehicle from suddenly moving forward • To prevent the vehicle from being stolen • To prevent the vehicle from moving (to prevent the vehicle from starting moving down a slope or an inclined plane without a driver inside the vehicle)
Warning activation conditions (The warning is activated when all of these conditions are met).	• The power mode is ACC ON or IG ON. • The shift lever is in a position other than P. • The driver's door is opened and then closed. • The electrical key transmitter SUB-ASSY is not inside the vehicle (a matching code is not detected inside the vehicle). • The vehicle is stopped.
Description	• The combination meter ASSY buzzer gives a continuous beeping sound. • The smart key indicator blinks yellow. • The wireless buzzer gives a continuous beeping sound.
Warning deactivation conditions (The warning is deactivated when any one of these conditions is met).	• The power mode changes to IG OFF. • The shift lever is moved to P. • The electrical key transmitter SUB-ASSY is detected inside the vehicle (a matching code is detected inside the vehicle). • The vehicle is running.

(2) Alarm that goes on when you attempt to get off the vehicle with the shift lever in P (without turning off the power) (key reminder warning)

*: for automatic transmission

(a) Situation A: An attempt is made to open the driver's door and get off the vehicle with the steering wheel unlocked.

Item	Contents
Purpose of the warning	To prevent the vehicle from being stolen
Warning activation conditions (When all of the conditions for either condition 1 or condition 2 are met)	Condition 1: • ACC ON • Driver's door is open. Condition 2 (1 second): • The power mode is IG OFF. • Driver's door is open. • The steering wheel is unlocked.
Description	• The combination meter ASSY buzzer gives a continuous beeping sound.
Warning deactivation conditions (The warning is deactivated when any one of these conditions is met).	• The power mode changes to IG ON. • Driver's door is closed • The power mode is IG OFF and the steering wheel is locked.

(b) Situation B: Under Condition 1 of Situation A, the driver gets off the vehicle carrying the electrical key transmitter SUB-ASSY, closes the driver's door, and attempts to walk away from the vehicle.

Item	Contents
Purpose of the warning	To prevent the vehicle from being stolen
Warning activation conditions (The warning is activated when all of these conditions are met).	• The power mode is ACC ON or IG ON. • The shift lever is in P. • The driver's door is opened and then closed. • The electrical key transmitter SUB-ASSY is not inside the vehicle (a matching code is not detected inside the vehicle). • The vehicle is stopped.
Description	• The combination meter ASSY buzzer beeps 1 time. • The wireless buzzer makes 3 short beeping sounds. • The smart key indicator on the combination meter ASSY blinks orange.
Warning deactivation conditions (The warning is deactivated when any one of these conditions is met).	• The engine switch is off. • The electrical key transmitter SUB-ASSY is detected inside the vehicle (a matching code is detected inside the vehicle).

(c) Situation C: Under the situation in which the conditions of Situation B are met, the driver closes the door and performs an entry lock operation.

Item	Contents
Purpose of the warning	To prevent the vehicle from being stolen
Warning activation conditions (The warning is activated when all of these conditions are met).	• The power mode is ACC ON or IG ON. • The shift lever is in P. • The electrical key transmitter SUB-ASSY is not inside the vehicle (a matching code is not detected inside the vehicle). • The electrical key transmitter SUB-ASSY is detected outside the vehicle (a matching code is detected outside the vehicle). • An entry lock operation is performed. • The vehicle is stopped.
Description	• The combination meter ASSY buzzer beeps once. • The wireless buzzer gives a continuous beeping sound. • The smart key indicator blinks orange.
Warning deactivation conditions (The warning is deactivated when any one of these conditions is met).	• 5 seconds elapses after the start of warning (only the buzzer stops). • The power mode is IG OFF. • The shift lever is in a position other than P. • The vehicle is running. • The electrical key transmitter SUB-ASSY is detected inside the vehicle (a matching code is detected inside the vehicle). • Open one of the doors. • Close one of the doors.

(3) Warning provided when a fellow passenger brings the electrical key transmitter SUB-ASSY outside the vehicle

(a) A door other than the driver's door opens, and a fellow passenger attempts to get off the vehicle carrying the key.

Item	Contents
Purpose of the warning	To prevent any situation that might make it impossible to restart the engine
Warning activation conditions (The warning is activated when all of these conditions are met).	• The power mode is ACC ON or IG ON. • A door other than the driver's door is opened and then closed. • The vehicle is stopped. • The electrical key transmitter SUB-ASSY is not inside the vehicle (a matching code is not detected inside the vehicle).
Description	• The combination meter ASSY buzzer beeps once. • The wireless buzzer makes 3 short beeping sounds. • The smart warning light on the combination meter ASSY blinks orange.
Warning deactivation conditions (The warning is deactivated when any one of these conditions is met).	• The engine switch is off. • The electrical key transmitter SUB-ASSY is detected inside the vehicle (a matching code is detected inside the vehicle).

(4) Warning provided when the key is not inside the detection area

(a)An attempt is made to change the power mode to IG ON or ACC ON, or to start the engine when the key is not detected inside the vehicle.

Item	Contents
Purpose of the warning	To prevent user confusion
Warning activation conditions (The warning is activated when all of these conditions are met).	• The engine immobilizer is enabled. • The engine switch is touched when the electrical key transmitter SUB-ASSY is not inside the vehicle, or when the key battery is drained (a matching code is not detected inside the vehicle).
Description	• The combination meter ASSY buzzer beeps once. • The smart warning light on the combination meter ASSY blinks orange.
Warning deactivation conditions (The warning is deactivated when any one of these conditions is met).	• 15 seconds elapses after the start of warning. • With the entry function is cancelled, the electrical key transmitter SUB-ASSY comes into contact with the engine switch when the electrical key transmitter SUB-ASSY is not inside the vehicle or when the key battery is drained (a matching code is detected inside the vehicle).

(5) No key in vehicle alarm signal

(a)The driver starts the vehicle without the key inside the vehicle.

Item	Contents
Purpose of the warning	To prevent any situation that might make it impossible to restart the engine
Warning activation conditions (The warning is activated when all of these conditions are met).	• IG ON • A fellow passenger moves the key outside the vehicle warning detection area. • The vehicle is running. • The electrical key transmitter SUB-ASSY is not inside the vehicle (a matching code is not detected inside the vehicle).
Description	• The combination meter ASSY buzzer beeps for 7 seconds. • The smart key indicator on the combination meter ASSY blinks orange.
Warning deactivation conditions (The warning is deactivated when any one of these conditions is met).	• The power mode is IG OFF. • The electrical key transmitter SUB-ASSY is detected inside the vehicle (a matching code is detected inside the vehicle).

(6) Anti-lockout warning

(a)An entry lock operation is performed with the key left inside the vehicle.

Item	Contents
Purpose of the warning	To prevent the vehicle from being stolen
Warning activation conditions (The warning is activated when all of these conditions are met).	• The power mode is IG OFF. • All doors are closed. • The electrical key transmitter SUB-ASSY is inside the vehicle (a matching code is detected inside the vehicle). • The lock sensor is touched (without a door lock operation). • The vehicle is stopped.
Description	• The wireless buzzer gives a continuous beeping sound.
Warning deactivation conditions (The warning is deactivated when any one of these conditions is met).	• 5 seconds elapses after the start of warning. • The power mode is ACC ON or IG ON. • One of the doors is open. • A lock operation is performed. (Other than smart door lock)

(7) Door open reminder warning

(a)An entry lock operation is performed when there is a door that is not properly closed.

Item	Contents
Purpose of the warning	To prevent the vehicle from being stolen
Warning activation conditions (The warning is activated when all of these conditions are met).	• The power mode is IG OFF. • One of the doors (except the one with the touch sensor that the user is currently touching) is open. • The lock sensor is touched, or the lock switch on the electrical key transmitter SUB-ASSY is pressed. • The electrical key transmitter SUB-ASSY is detected inside the vehicle (a matching code is detected outside the vehicle).
Description	• The wireless buzzer gives a continuous beeping sound.
Warning deactivation conditions (The warning is deactivated when any one of these conditions is met).	• 5 seconds elapses after the start of warning. • The power mode is ACC ON or IG ON. • All doors are closed. • A wireless unlock operation is performed. • An entry unlock operation is performed.

(8) Lockout protection function

(a)An attempt is made to lock a door with the electrical key transmitter SUB-ASSY left inside the vehicle.

Item	Contents
Purpose of the warning	To prevent the vehicle from being stolen
Warning activation conditions (The warning is activated when all of these conditions are met).	• A keyless lock operation*1 is performed. • The electrical key transmitter SUB-ASSY is inside the vehicle (a matching code is detected inside the vehicle). • The vehicle is stopped.
Description	• The combination meter ASSY buzzer beeps once. • The wireless buzzer gives a continuous beeping sound.
Warning deactivation conditions (The warning is deactivated when any one of these conditions is met).	• 5 seconds elapses after the start of warning. • The power mode is changed. • One of the doors is open. • A lock operation is performed. • The vehicle is running.

*1: A keyless lock operation refers to the process of locking an open door by operating the door lock knob and then closing the door while pulling the front door outer handle ASSY.

(9) Key battery low warning

(a)The vehicle is running with the transmitter battery almost drained.

Item	Contents
Purpose of the warning	• Convenient function • To prevent any situation that might make it impossible to restart the engine
Warning activation conditions (When all of the conditions for either condition 1 or condition 2 are met)	Condition 1: • The vehicle stops after 20 minutes or longer in the IG ON state. • The transmitter battery is almost drained. • The electrical key transmitter SUB-ASSY is inside the vehicle (a matching code is detected inside the vehicle). • The vehicle is stopped. Condition 2: • The engine is started in a cold state. • The transmitter battery is almost drained. • The electrical key transmitter SUB-ASSY is inside the vehicle (a matching code is detected inside the vehicle). • The vehicle is stopped. • A key low battery warning log is present.*
Description	• The combination meter ASSY buzzer beeps once. • The smart warning light on the combination meter ASSY blinks orange.
Warning deactivation conditions (The warning is deactivated when any one of these conditions is met).	• 15 seconds elapses after the start of warning. • The vehicle is running.

* The "key low battery warning" is logged when the power mode changes to IG OFF after 20 minutes or longer in the IG ON state.

(10) Warning provided when the steering wheel is not unlocked

- The steering wheel does not unlock.

- The shift lever is moved to a position other than P before the steering wheel is unlocked (applicable to automatic transmission only).

Item	Contents
Purpose of the warning	Convenient function
Warning activation conditions	The steering wheel does not unlock.
Description	• The combination meter ASSY buzzer beeps once. • The smart key indicator on the combination meter ASSY blinks green.
Warning deactivation conditions (The warning is deactivated when any one of these conditions is met).	• 15 seconds elapses after the start of warning. • The steering wheel is unlocked.

(11) Entry & start system error warning

(a) After a problem in the clutch switch or problem that can cause a failure in the steering lock ECM is detected, either a failure in the IG drive circuit or a vehicle speed information error is detected.

Item	Contents
Purpose of the warning	A failure is detected.
Warning activation conditions (The warning is deactivated when any one of these conditions is met).	• IG OFF, driver's door closed →door opened, clutch switch ON for 300 seconds or more (MT vehicles) • Steering lock actuator ASSY (steering lock ECM) failure • Collation ECM (smart key ECM ASSY) failure • Steering lock/unlock position switch failure • An IG relay output circuit error is detected. • A vehicle speed error is detected. • The loss of vehicle speed signal communication is detected.
Description	• The combination meter ASSY buzzer beeps once. • The smart key indicator on the combination meter ASSY blinks orange.
Warning deactivation conditions (The warning is deactivated when any one of these conditions is met).	• 15 seconds elapses after the start of warning. • Normal state is resumed.

(12) Immobilizer check completion report

(a) The electrical key transmitter SUB-ASSY comes into contact with the engine switch when the battery of the electrical key transmitter SUB-ASSY is drained, when the entry function is cancelled, or when interference from interference waves.

Item	Contents
Purpose of the warning	Convenient function
Warning activation conditions	• The key comes into contact with the engine switch when the key battery is drained or when the entry function is cancelled (a matching code is detected inside the vehicle).
Description	• The combination meter ASSY buzzer makes a short beeping sound.

HOW TO PROCEED WITH TROUBLESHOOTING

NOTE:

- Use these procedures to troubleshoot the entry and start system (for entry function).
- *: Use the SSM4.

1	VEHICLE BROUGHT TO WORKSHOP

NEXT

2	CUSTOMER PROBLEM ANALYSIS

NOTE:

- In troubleshooting, confirm that the problem symptoms have been accurately identified. Preconceptions should be discarded in order to

make an accurate judgment. To clearly understand what the problem symptoms are, it is extremely important to ask the customer about the problem and the conditions at the time the malfunction occurred.

- Gather as much information as possible for reference. Past problems that seem unrelated may also help in some cases.
- The following 5 items are important points for problem analysis:

What?	Vehicle model, system name
When?	Date, time, occurrence frequency. Does it occur recently or for a long time?
Where?	Does it occur at specified place?
Under what conditions?	Unlock/lock the door, engine switch on (IG), engine start.
How did it happen?	Problem symptoms*

– *: Be sure to ask the customer in detail about the following points concerning the vehicle operating conditions, environment and problem, and then check for DTCs.
  (1) If the entry lock/unlock function does not operate for all doors.
  (2) If the entry lock function does not operate.
  (3) If the entry unlock function does not operate.
  (4) If both the entry lock and unlock functions do not operate.
  (5) If the wireless lock and unlock functions do not operate.
  (6) If there is no power even when the engine switch is pressed [does not turn on (ACC)].
  (7) If the engine does not start with the entry ignition function.
  (8) If the outside warning buzzers do not sound.
  (9) Did you try to engine start by put the electrical key direct on the engine switch and press the engine switch on (IG).
  (10)If the interior warning buzzers do not sound.
  (11)If the steering lock does not unlock.
  (12)Any other details concerning the problem.

– If it is supposed that electric wave interference is likely, be sure to ask the customer in detail about the following points concerning the vehicle operating conditions, environment and problem.
  (1) Specific locations where the system does not operate (such as near TV towers, large video displays, wireless garage door opener systems, wireless security cameras, home security systems, etc.).
  (2) Specific times when the system does not operate: Whether or not symptoms occurred immediately after purchase or only recently. Whether or not the symptoms occurred when the key was even right by the vehicle (electrical key antenna).
  (3) If the system does not operate only when near specific vehicles (there may be an effect from electric waves from the wireless systems of other vehicles).
  (4) If the system operates intermittently.
  (5) If the key is bundled together with other items.
  (6) If the key is carried together with other electronic devices, such as cell phones, personal computers, portable music players, other electrical keys, etc. (keep the key at least 0.1m {0.33 ft.} away from such items).
  (7) Where the key is being kept when not in use: Whether or not the key being placed within 1m {3.28 ft.} of items such as TVs, DVD recorders, induction cookers, rice cookers, dishwashers, modems, cell phones, personal computers, microwave ovens, desk or floor lamps, cordless telephones, etc.

(8) If there are electronic devices that transmit electric waves placed in the vehicle.
(9) When the key battery was last replaced (when the battery is low). The key battery can be checked roughly using the "Key Low Battery" item in the [Data monitor] (See page TD - 53).
(10) If the customer installed any optional components (theft deterrent devices, wireless fog lights, etc.) to the vehicle.

NEXT

3	INSPECT BATTERY VOLTAGE

Standard voltage: 11 to 14V
(1) If the voltage is below 11V, recharge or replace the battery before proceeding.
NOTE:
A simple method to determine whether the battery is depleted is to operate the horn

NEXT

4	VSC System Inspection

(1) Use the SSM4 to check if the VSC system is functioning normally.
NOTE:
- If the certification ECU (smart key ECU assembly) mistakenly receives a vehicle speed signal, communication between the vehicle and the SSM4 fails.
- Be sure to check "Vehicle Speed" displayed on the [Data monitor] to make sure that the vehicle speed is not abnormal.

Result

Result	Proceed to
No vehicle speed signal is mistakenly received.	A
A vehicle speed signal is mistakenly received.	B

B → GO TO VSC SYSTEM (See page TD - 59)

A

5	Communication inspection of the CAN communication system

(1) Check CAN communication system. (Refer to NW - 30)
Result

Result	Proceed to
Functioning properly	A
Not functioning properly	B

B → Go to "CAN communication system" ("How to troubleshoot") (refer to NW - 30).

A

6	Communication function inspection of large-scale multiplex communication system for vehicle body [LIN]

(1) Inspect the large-scale multiplex communication system for vehicle body. (Refer to NW - 5)

Result

Result	Proceed to
Functioning properly	A
Not functioning properly	B

B → Go to "large-scale multiplex communication system for vehicle body [LIN] (How to troubleshoot)" (Refer to NW - 5)

A

7	CHECK FOR DTC*

TD

(1) Recheck for DTCs (See page TD - 52). Based on the DTCs output, proceed each system's DTC procedure.

Result

Result	Proceed to
DTC is not output	A
Steering lock system DTC is output	B
Engine immobiliser system DTC is output	C
Entry and start system (for entry function) DTC is output	D

B → GO TO STEERING LOCK SYSTEM (refer to SR - 4).

C → GO TO ENGINE IMMOBILISER SYSTEM (Refer to TD - 266).

D → GO TO DIAGNOSTIC TROUBLE CODE CHART (See page TD - 59)

A

8	PROBLEM SYMPTOMS TABLE

(1) Refer to Problem Symptoms Table (refer to TD - 39)

Result

Result	Proceed to
Fault is not listed in problem symptoms table	A
Fault is listed in problem symptoms table	B

B → Go to step 10

A

9	OVERALL ANALYSIS AND TROUBLESHOOTING*

(1) Operation Check (See page TD - 31)

(2) Check [Data monitor] / [Active Test] (See page TD - 53).
(3) Check ECM terminal arrangement (See page TD - 40)

NEXT

10	REPAIR OR REPLACE

NEXT

11	CHECK FOR DTC*

(1) Clear the DTCs (See page TD - 52)
(2) Check for DTCs (See page TD - 52)
NOTE:
Before checking for DTCs, perform the "DTC Output Confirmation Operation" procedure (See page TD - 59).

Result

Result	Proceed to
DTC is not output	A
Entry and start system (for entry function) DTC is output	B

B → GO TO DIAGNOSTIC TROUBLE CODE CHART (See page TD - 59)

A

END

Operation check

1. Entry & start system (entry function) operation
CAUTION:
Make sure that the entry & start system (entry function) is not disabled before proceeding with this inspection procedure.
(1) Check the entry unlock function (driver's door and the passenger's door).
(a) Lock all doors by a wireless lock operation, and holding the electrical key transmitter in your hand, touch the unlock sensor integrated into the back side of driver's side the front door outer handle ASSY. Check that driver's door is unlocked.
NOTE:
To perform a wireless lock operation, stand close to the front door outer handle ASSY and press the lock switch on the electrical key transmitter.

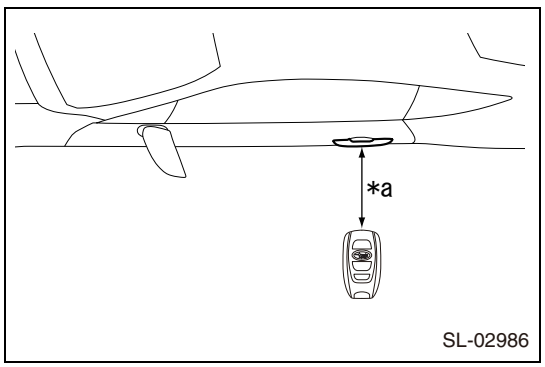

(b) Inspect the entry lock detection area. Lock all the doors. Holding the electrical key transmitter at the same level as the front door outer handle ASSY (approximately 0.8 m {2.62 feet} above ground), stand approximately 0.7 m (2.30 feet) away from the vehicle, as shown in the figure. Check if the LED (red) on the electrical key transmitter SUB-ASSY blinks.

Captions in illustration

*a	0.7 - 1m

(c) With the system in unlock standby mode, hold the front door outer handle ASSY and check that all doors are unlocked.

NOTE:

- If the electrical key transmitter SUB-ASSY is inside the detection area, and if the key ID code transmitted from the key matches the one stored in the collation ECM (smart key ECM ASSY), the system enters unlock standby mode.
- If the electrical key transmitter SUB-ASSY is within 0.2 m (0.66 feet) of the front door outer handle ASSY, communication might not be possible.
- Use the same procedure to inspect the front passenger's door. Check that all doors are unlocked when you touch the passenger's side unlock touch sensor.

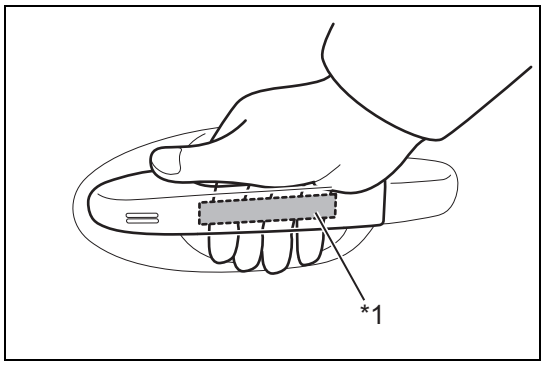

(d) Check the unlock response sensitivity. With the system in unlock standby mode, touch the part indicated in the figure and check that the door is unlocked.
CAUTION:
If you touch the sensor too quickly or too slowly, the sensor fails to respond and the door does not unlock.

Captions in illustration

*1	Unlock sensor (back side of the handle)

TD

(2) Check the entry lock function (driver's door and the passenger's door).
CAUTION:
If you perform a door lock operation when the electrical key transmitter SUB-ASSY is located inside the vehicle but outside the detection area (on the instrument panel, in the glove compartment, or on the floor), the key lock-in prevention function does not kick in, which means that you will end up locking the door with the electrical key transmitter SUB-ASSY left inside the vehicle.

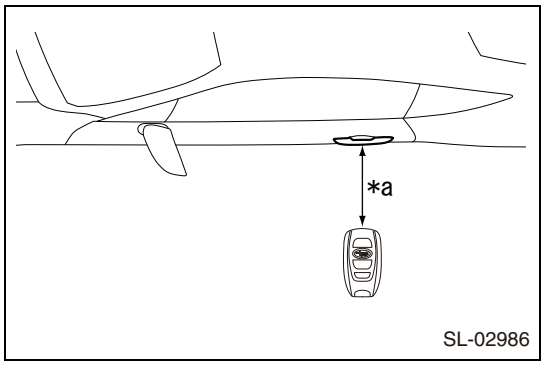

(a) With all doors closed and unlocked, hold the electrical key transmitter SUB-ASSY in your hand and touch the lock sensor on the driver's side front door outer handle ASSY. Check that all doors are locked.

Captions in illustration

*a	Approx. 0.3 m

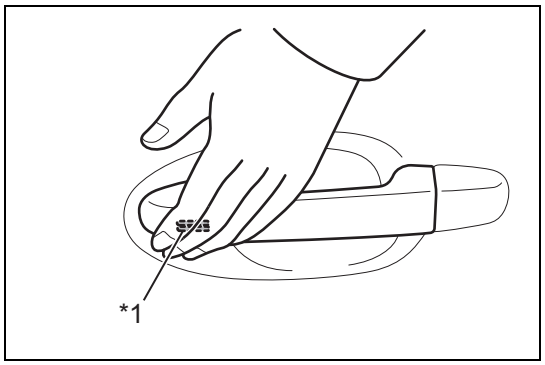

(b) Inspect the entry lock operating range. Standing approximately 0.3 m (0.98 feet) away from the vehicle, position the electrical key transmitter SUB-ASSY approximately 0.1 m (0.33 feet) below the door glass (or approximately 0.8 m (2.62 feet) above ground), as shown in the figure. Touch the lock sensor and check that all doors are locked.

Captions in illustration

*1	Lock sensor

NOTE:

- If touching the lock sensor does not lock the doors, press the lock sensor with your palm.
- If the electrical key transmitter SUB-ASSY is within 0.2 m (0.66 feet) of the front door outer handle ASSY, communication might not be possible. Furthermore, if you touch the lock sensor with the same hand holding the electrical key transmitter SUB-ASSY, you might fail to lock doors.
- If the key lock-in prevention buzzer beeps, radio waves from the indoor electrical key antenna might be leaking outside of the vehicle.

- Use the same procedure to inspect the passenger's door.

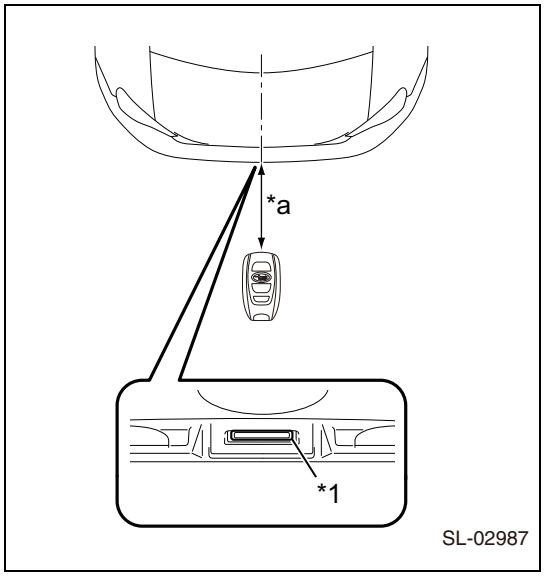

(3) Inspect the entry trunk open function.

(a) With the trunk closed, operate the unlock switch on the trunk opening switch ASSY. Check that the trunk opens.

Captions in illustration

*1	Unlock switch
*a	Approx. 0.7m

(b) Inspect the entry trunk unlock operating range. Stand approximately 0.7 m away from the rear end of the vehicle, holding the electrical key transmitter SUB-ASSY at the same level as the trunk opening switch ASSY, as shown in the figure above. Press the trunk opening switch ASSY and check that the trunk opens.

TD

(4) Check the lockout protection function (in the trunk).

(a) Lock all doors and place the electrical key transmitter SUB-ASSY inside the trunk. Check if 1) the wireless buzzer beeps (for approximately 5 seconds) as you close the trunk, and 2) the trunk door opens as you press the trunk opening switch ASSY.

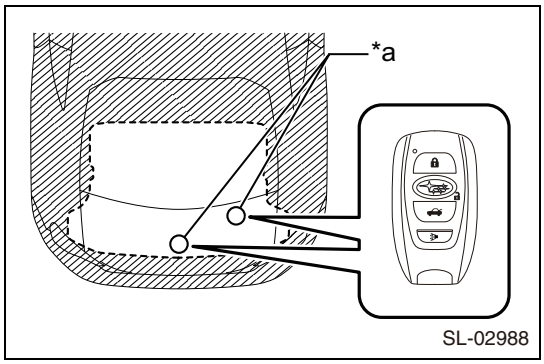

(b) Check the detection area for the lockout protection function. Make sure that the electrical key transmitter SUB-ASSY is facing in the direction shown in the figure. Place the electrical key transmitter SUB-ASSY in either of the 2 positions shown in the figure and check that 1) the key wireless buzzer beeps (for approximately 5 seconds) if you close the trunk, and 2) the trunk opens if you press the trunk opening switch ASSY.

Captions in illustration

*a	Inspection point

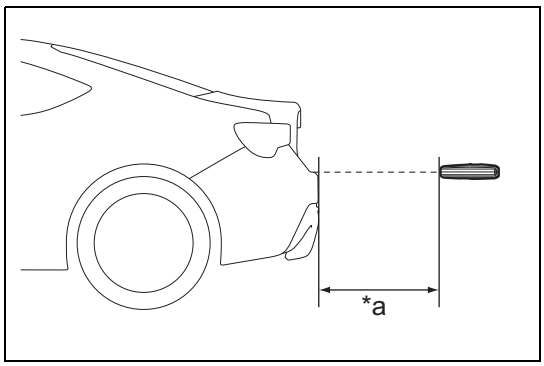

(c) Inspect the lockout protection detection area and the door control receiver for a radio wave leakage. Hold the electrical key transmitter SUB-ASSY at the same level as the trunk, positioning it at the center of the rear end of the vehicle. Make sure that the electrical key transmitter SUB-ASSY is positioned correctly and facing in the direction shown in the figure.

Captions in illustration

*a	0.1 m or more (0.328 feet or more)

NOTE:

- If the electrical key transmitter SUB-ASSY is 0.1 m (0.328 feet) or more away from the rear bumper, the wireless buzzer does not go off.
- If the warning buzzer beeps, radio waves might be leaking from the indoor electrical key antenna no. 3 (antenna located inside the trunk).

(5) Check the push button start function (applicable to automatic transmission only).

(a) With the engine switch turned off, move the shift lever in P. Holding the electrical key transmitter SUB-ASSY in your hand, depress the brake pedal. Check that the key indicator on the combination meter ASSY lights in green. If the key indicator light of the combination meter ASSY lights up green, press the engine switch, and check that the engine starts.

(b) Without depressing the brake pedal, change the power mode to IG OFF. Press the electrical key transmitter SUB-ASSY and check that the power mode changes as follows: OFF →ON (ACC) →ON (IG) →OFF. If the shift lever is in a position other than P when the engine switch is ON (IG), however, the power mode does not change to OFF but changes to ON (ACC).

(c) Turn off the engine and press the engine switch. Check if the power mode changes to OFF (the engine stops and all electrical systems turn off). If, however, the vehicle is stopped with the shift lever in a position other than P, the power mode does not change to OFF and changes to the ON (ACC) state even if you press the engine switch. In this case, move the shift lever back into P, press the engine switch, and check that the power mode changes to OFF. After the power turns OFF, open the door and check that the steering lock operates.

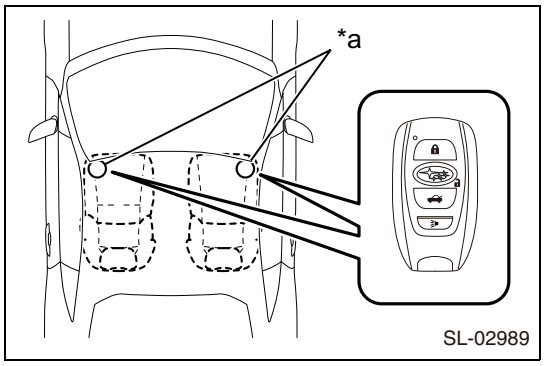

(d) Inspect the operation range of the entry ignition (front floor). In one of the inspection points, place the electrical key transmitter SUB-ASSY of the front seat in the direction shown in the figure, and check that the engine starts.

Captions in illustration

*a	Inspection point

CAUTION:

- Even when the electrical key transmitter SUB-ASSY is located within the key detection area inside the vehicle, it might not be detected properly if it is located on the instrument panel, inside the accessory box of the instrument panel, inside or near the front cup holder, inside the glove compartment, on the rear shelf, or on the floor.
- If the electrical key transmitter SUB-ASSY is within 0.2 m {0.66 feet} from the shift lever, communication may be impossible.
- If the electrical key transmitter SUB-ASSY is on the instrument panel or inside the glove compartment, the engine control system might not be activated.

NOTE:

Perform the inspection from both of these inspection points.

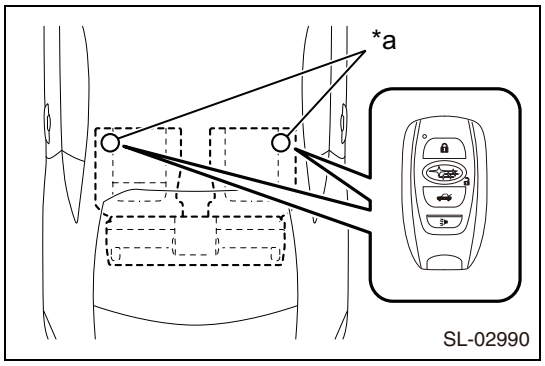

(e) Inspect the push button start operating range (rear floor). In one of the inspection points, place the electrical key transmitter SUB-ASSY, and check that the engine starts.

Captions in illustration

*a	Inspection point

CAUTION:

Even when the electrical key transmitter SUB-ASSY is located within the key detection area inside the vehicle, it might not be detected properly if it is located on the instrument panel, inside the accessory box of the instrument panel, inside or near the front cup holder, inside the glove compartment, on the rear shelf, or on the floor.

NOTE:

Perform the inspection from both of these inspection points.

(6) Check the push button start function (applicable to manual transmission only).

(a) With the engine switch turned off and holding the electrical key transmitter SUB-ASSY in your hand, depress the clutch pedal. Check if the entry key indicator on the combination meter ASSY lights in green. If the key indicator light of the combination meter ASSY lights up green, press the engine switch, and check that the engine starts.

(b) Without depressing the clutch pedal, change the power mode to IG OFF. Press the electrical key transmitter SUB-ASSY and check that the power mode changes as follows: OFF →ON (ACC) →ON (IG) →OFF.

(c) Turn off the engine and press the engine switch. Check if the power mode changes to OFF (the engine stops and all electrical systems turn off). Open the door and check that the steering lock operates.

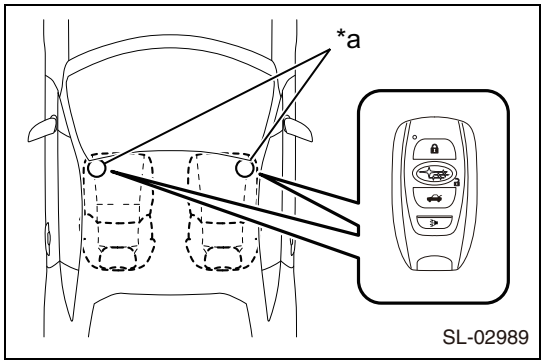

(d)Inspect the push button start operating range (front floor). In one of the inspection points, place the electrical key transmitter SUB-ASSY of the front seat in the direction shown in the figure, and check that the engine starts.

Captions in illustration

*a	Inspection point

CAUTION:

- Even when the electrical key transmitter SUB-ASSY is located within the key detection area inside the vehicle, it might not be detected properly if it is located on the instrument panel, inside the accessory box of the instrument panel, inside or near the front cup holder, inside the glove compartment, on the rear shelf, or on the floor.
- If the electrical key transmitter SUB-ASSY is within 0.2 m {0.66 feet} from the shift lever, communication may be impossible.
- If the electrical key transmitter SUB-ASSY is on the instrument panel or inside the glove compartment, the engine control system might not be activated.

NOTE:

Perform the inspection from both of these inspection points.

CAUTION:

If the electrical key transmitter SUB-ASSY is on the instrument panel or inside the glove compartment, the engine control system might not be activated.

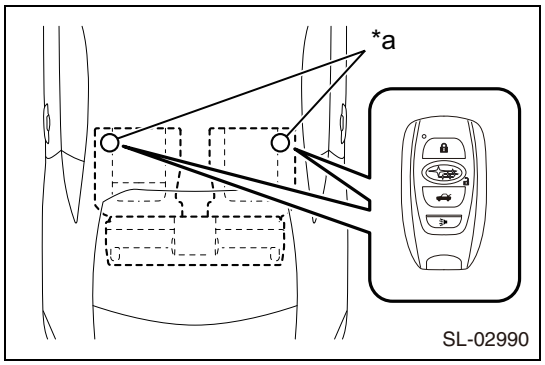

(e)Inspect the push button start operating range (rear floor). In one of the inspection points, place the electrical key transmitter SUB-ASSY, and check that the engine starts.

Captions in illustration

*a	Inspection point

CAUTION:

Even when the electrical key transmitter SUB-ASSY is located within the key detection area inside the vehicle, it might not be detected properly if it is located on the instrument panel, inside the accessory box of the instrument panel, inside or near the front cup holder, inside the glove compartment, on the rear shelf, or on the floor.

NOTE:

Perform the inspection from both of these inspection points.

(7) Check the lockout protection function (interior check).

CAUTION:

To prevent the key from being locked in the vehicle, perform this inspection procedure with a door glass open.

(a)Turn the ignition switch to OFF.

(b)Place the electrical key transmitter SUB-ASSY on the front or rear seat.

(c)Close all doors but make sure to leave the doors unlocked.

(d)Touch the lock sensor on the front door and check that the door does not lock, and that the lockout protection buzzer (exterior buzzer) sounds for approximately 5 seconds.

(8) Check the entry cancel function.

(a)Cancel the entry & start system and check that all functions of the entry & start system (entry function) are disabled.

NOTE:

- To cancel the entry & start system (entry function), refer to the procedure described below. (Refer to TD - 37)
- Even if you cancel the entry & start system, you can lock/unlock doors by a wireless operation. You can also operate the entry & start system by placing the electrical key transmitter SUB-ASSY over the engine switch.

(b)Enable the key cancel function (entry cancel function) and check that all functions of the entry & start system are disabled.

(9) Check the answer-back function (blinking of the hazard warning light and the sounding of the buzzer*).

Entry operation	Wireless buzzer	Hazard warning light
Entry door lock	Beeps 1 time	Blinks 1 time
Entry door unlock	Beeps 2 times	Blinks 2 times
Entry trunk open	Beeps 1 time	No blinking

2. [Keyless access system check]
CAUTION:
Perform this check procedure with the vehicle stopped.
NOTE:
In [Keyless access system check], you can check if the electrical key transmitter SUB-ASSY is properly detected by a specific electrical key antenna or is properly functioning in a specific detection area by sounding the wireless buzzer.
(1) Enter the following menu items: [Keyless access system check] →[Keyless Access (Collation ECM)] →[Work Support] →[Function Check Sequence] →[Keyless access system check].
(2) Refer to the table below and inspect an appropriate item.

Tester display	Check item
[Driver's External Transmitter + Interior Tuner] *1	Front door outer handle ASSY (electrical key antenna) (driver's side antenna)
[Passenger's External Transmitter + Interior Tuner] *2	Front door outer handle ASSY (electrical key antenna) (front passenger's side antenna)
[Fr Interior Transmitter + Interior Tuner] *3	Indoor electrical key antenna ASSY no. 1 (front floor)
[Rr Interior transmitter + Indoor tuner] *4	Indoor electrical key antenna ASSY no. 2 (rear floor)
[Out of trunk transmitter + room tuner] *5	Electrical key antenna (trunk exterior)
[Trunk Internal Transmitter + Interior Tuner] *6	Indoor electrical key antenna ASSY No. 3 (trunk)
[Immobilizer amplifier transmission] *7	Amplifier (engine switch)

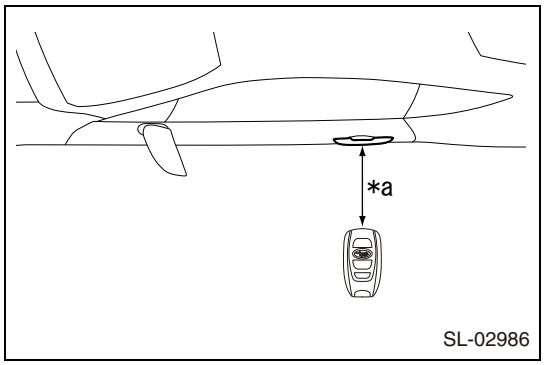

(3) Move the electrical key transmitter SUB-ASSY toward a specific electrical key antenna, and check that the wireless door buzzer beeps.
(a)*1: Front door outer handle ASSY (driver's side electrical key antenna)

Captions in illustration

*a	Approx. 0.7m

NOTE:
- As shown in the figure, hold the electrical key transmitter SUB-ASSY at the same level as the front door outer handle ASSY (approximately 0.8 m above ground).
- *2: Inspect the passenger's door as well using the same procedure.

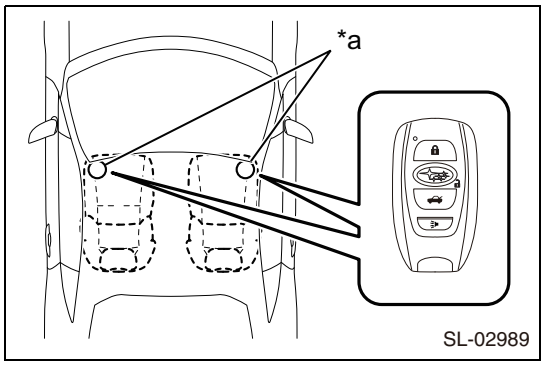

(4) *3: Indoor electrical key antenna ASSY no. 1 (front floor)

Captions in illustration

*a	Inspection point

NOTE:
Place the electrical key transmitter SUB-ASSY on the driver's side or passenger's side front seat cushion.

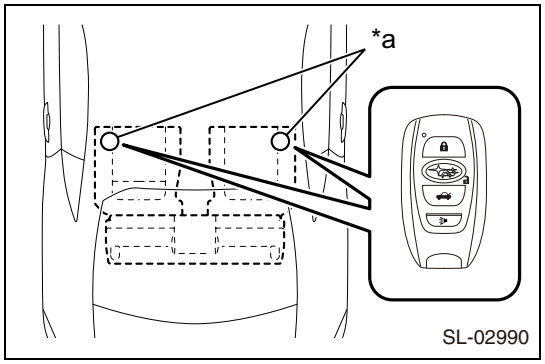

(5) *4: Indoor electrical key antenna No. 2 (rear floor)

Captions in illustration

*a	Inspection point

NOTE:
Place the electrical key transmitter SUB-ASSY on the rear seat.

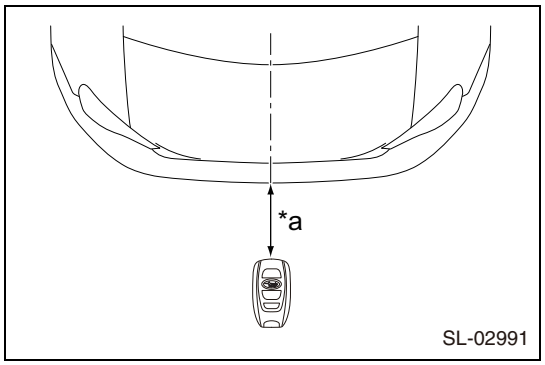

(6) *5: Electrical key antenna (trunk exterior)

Captions in illustration

*a	Approx. 0.7m

NOTE:
Hold the electrical key transmitter SUB-ASSY at the same level as the upper surface of the rear bumper, positioning it at the center of the rear end of the vehicle, as shown in the figure.

TD

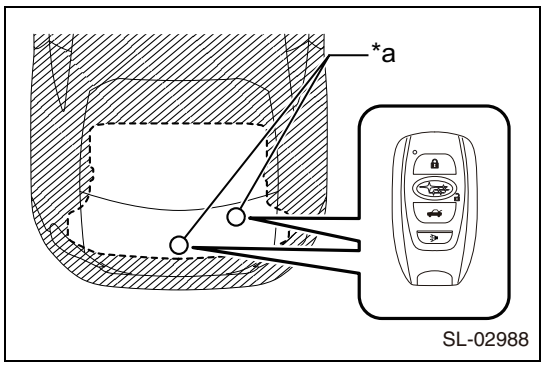

(7) *6: Indoor electrical key antenna No. 3 (in the trunk)

Captions in illustration

*a	Inspection point

NOTE:
Place the electrical key transmitter SUB-ASSY inside the trunk. Even when the electrical key transmitter SUB-ASSY is placed inside the trunk, the buzzer does not necessarily go off.

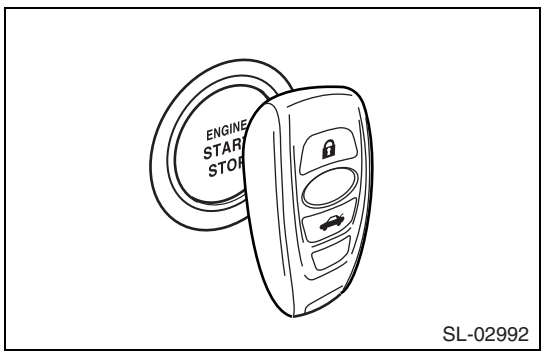

(8) *7: Amplifier (engine switch)
NOTE:
Hold the electrical key transmitter SUB-ASSY near the engine switch, with its switch side facing yourself.

CUSTOMIZE PARAMETERS

1. CUSTOMIZE ENTRY AND START SYSTEM (for Entry Function)
   NOTE:
   The following items can be customized.
   CAUTION:
   - When the customer requests a change in a function, first make sure that the function can be customized.
   - Record the current settings before customizing.

   (1) CUSTOMIZE ENTRY AND START SYSTEM (for Entry Function)
   (a)Customizing with the SSM4

(b)Connect the SSM4 to the DLC3.
(c)Turn the engine switch on (IG).
(d)Turn the SSM4 on.
(e)Enter the following menus: [Keyless Access(Collation ECM)] →[Customize]
(f) Select the setting by referring to the table below.

Entry & Start

Display	Default	Content	Setting	Relevant ECU
[Ignition Available Area]	All	Function that sets the area that the key must be in before the engine switch can be operated.	Front or All	Certification ECU (smart key ECU assembly)
[Parking Wait Time]	2.5s	Function that sets the period of time (lock confirmation time) that the door is prevented from being unlocked by operating the front door outside handle assembly after an entry lock operation is performed.	0.5s, 1.5s, 2.5s or 5s	Certification ECU (smart key ECU assembly)
[Trunk Open Mode]	ON	Function that opens the trunk when the driver has the electrical key transmitter sub-assembly and presses the trunk opening switch assembly.	OFF or ON	Certification ECU (smart key ECU assembly)
[Smart Cancel]	OFF	Function that enables or disables the entry and start system.	OFF or ON	Certification ECU (smart key ECU assembly)
[Smart door unlock mode]	Driver	Function that chooses the doors to be operated by entry unlock operation.	All or Driver	Certification ECU (smart key ECU assembly)
[Touch Activation Over Threshold]	Active	The function that limits the consecutive entry lock operation to only 2 times can be changed between Active and Not Active. When in Not Active mode, there is no limit for the number of times that the consecutive entry lock operation can be performed.	Active or Not Active	Certification ECU (smart key ECU assembly)

Warning

Display	Default	Content	Setting	Relevant ECU
[Key Low Battery Warning]	ON	Enables or disables the sounding of the buzzer when the key battery is low and the engine switch is turned off after being on (IG) for 20 minutes or more.	OFF or ON	Certification ECU (smart key ECU assembly)
[Key Left in Vehicle Buzzer]	ON	Function to warn when left the electrical key transmitter sub-assembly in the vehicle.	OFF or ON	Certification ECU (smart key ECU assembly)
[IG ON Key Out Warning]	ON	Enables or disables the lock sensor function that sets off the alarm if the lock sensor is touched when the shift lever is in P (transmission A/T) and the power is ON.	OFF or ON	Certification ECU (smart key ECU assembly)

(2) Entry cancel function (manual operation)
NOTE:
While the entry and start system is canceled, it is possible to lock and unlock the doors with the wireless operation, and the start system can be operated by holding the key against the engine switch.
(a)The following functions are disabled when the entry and start system is canceled.
1. Entry unlock/lock functions
2. Entry ignition function
3. Key lock-in prevention function
4. Entry back door open/lock function
5. Entry warning functions

(b)Canceling the system operation:
1. Make sure the following conditions are met:
   – The engine switch is off.
   – The driver side door is closed.
   – The driver side door is unlocked.
2. Press the unlock switch of the electrical key transmitter sub-assembly.
3. Open the driver side door within 5 seconds of completing the step above (driver side door: closed at beginning of step→opened).

4. With the driver side door open, press the unlock switch of the electrical key transmitter sub-assembly 2 times within 5 seconds of completing the step above.
   CAUTION:
   If the driver side door is closed before or while pressing the unlock switch, the entry cancel setting mode will end.
5. Close and open the driver side door twice within 30 seconds of completing the above step (driver side door: open at beginning of step →closed →opened →closed →opened).
6. With the driver side door open, press the unlock switch of the electrical key transmitter sub-assembly 2 times within 30 seconds of completing the step above.
   CAUTION:
   If the driver side door is closed before or while pressing the unlock switch, the entry cancel setting mode will end.
7. Close and open the driver side door within 30 seconds of completing the step above (driver side door: open at beginning of step→ closed →opened).
8. Close the driver side door within 5 seconds of completing the above step.
9. Check that the wireless buzzer sounds twice (short beeps) to confirm that the entry and start system has been canceled.

(c) Perform the following procedure to restore the entry and start system to the active state from the canceled state.

1. Perform the procedures to cancel the entry and start system again.

(d) Check that the wireless buzzer sounds once (short beep) to confirm that the entry and start system has been restored to the active state.

NOTE:

- The system changes between the canceled state and the active state each time the procedure to cancel the system is performed.
- The buzzer sounds twice when the system changes from the active state to the canceled state, and sounds once when the system changes from the canceled state to the active state.

TD

PROBLEM SYMPTOMS TABLE

NOTE:

- Use the table below to help determine the cause of problem symptoms. If multiple suspected areas are listed, the potential causes of the symptoms are listed in order of probability in the "Suspected Area" column of the table. Check each symptom by checking the suspected areas in the order they are listed. Replace parts as necessary.
- Inspect the fuses and relays related to this system before inspecting the suspected areas below.

Entry and Start System (for Entry Function)

Symptom	Suspected Area	See page
Wireless Door Lock Buzzer does not Sound	Wireless door lock buzzer	TD - 82
	Wire harness or connector	-
	Main body ECU (multiplex network body ECU)	-
	Instrument panel junction block assembly	-
	Certification ECU (smart key ECU assembly)	-
All Door Entry Lock/Unlock Functions and Wireless Functions do not Operate	Power door lock control system	TD - 84
	Electrical key transmitter sub-assembly	-
	Transmitter battery	-
	Wire harness or connector	-
	Door control receiver	-
	Certification ECU (smart key ECU assembly)	-
All Door Entry Lock/Unlock Functions do not Operate, but Wireless Functions Operate	Electrical key transmitter sub-assembly	TD - 92
	Certification ECU (smart key ECU assembly)	-
Driver Side Door Entry Unlock Function does not Operate	Power door lock control system	TD - 97
	Front door outside handle assembly (for driver side)	-
	Certification ECU (smart key ECU assembly)	-
	Wire harness or connector	-
Front Passenger Side Door Entry Unlock Function does not Operate	Power door lock control system	TD - 101
	Front door outside handle assembly (for front passenger side)	-
	Certification ECU (smart key ECU assembly)	-
	Wire harness or connector	-

Symptom	Suspected Area	See page
Driver Side Door Entry Lock and Unlock Function does not Operate	Power door lock control system	TD - 104
	Front door outside handle assembly (for driver side)	-
	Certification ECU (smart key ECU assembly)	-
	Wire harness or connector	-
Front Passenger Side Door Entry Lock and Unlock Function does not Operate	Power door lock control system	TD - 108
	Front door outside handle assembly (for front passenger side)	-
	Certification ECU (smart key ECU assembly)	-
	Wire harness or connector	-
Driver Side Door Entry Lock Function does not Operate	Power door lock control system	TD - 111
	Front door outside handle assembly (for driver side)	-
	Certification ECU (smart key ECU assembly)	-
	Wire harness or connector	-
Front Passenger Side Door Entry Lock Function does not Operate	Power door lock control system	TD - 115
	Front door outside handle assembly (for front passenger side)	-
	Certification ECU (smart key ECU assembly)	-
	Wire harness or connector	-
Room Oscillator does not Recognize Key	No. 1 indoor electrical key antenna assembly (front floor)	TD - 118
	No. 2 indoor electrical key antenna assembly (rear floor)	-
	Certification ECU (smart key ECU assembly)	-
	Wire harness or connector	-
Trunk Entry Unlock Function does not Operate when Key is Outside Trunk Compartment	Power door lock control system	TD - 125
	Electrical key antenna (outside trunk)	-
	Trunk opening switch assembly	-
	Certification ECU (smart key ECU assembly)	-
	Wire harness or connector	-
Key Trunk Lock-in Prevention Function does not Operate	Power door lock control system	TD - 131
	Electrical key antenna (outside trunk)	-
	Certification ECU (smart key ECU assembly)	-
	Wire harness or connector	-
Entry Interior Alarm does not Sound	Meter/gauge system	TD - 135
	Certification ECU (smart key ECU assembly)	-

TD

ECM terminal arrangement

1. 1. Check the collation ECM (smart key ECM ASSY).

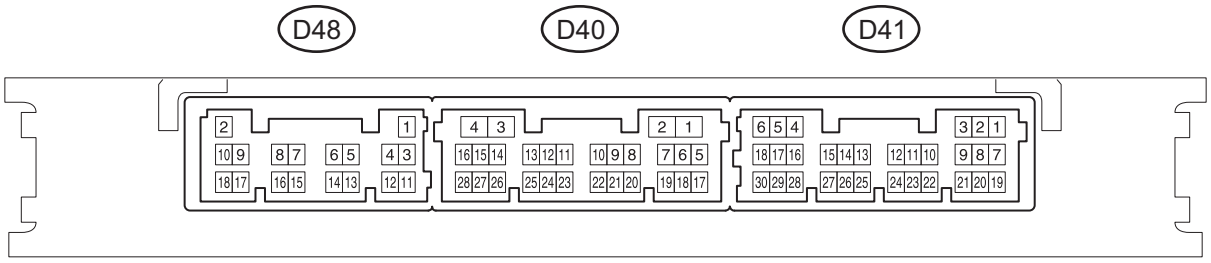

(1) Disconnect the D41 and D48 collation ECM (smart key ECM ASSY) connectors.

(2) Measure the voltage and resistance according to the following table.

NOTE:
Remove the connectors and measure the voltage and resistance of the wiring harness side.

Inspection terminals	Input/output	Terminal description	Conditions	Specified condition	Related [Data monitor] item
D48-2 (+B) - D48-11(GND)	Input	+B power supply	Always	9.5 - 16V	-
D48-11 (GND) - chassis ground	-	Ground	Always	1 Ωor less	-

If you cannot obtain the specified result, you have to suspect a defect in the wiring harness side. Otherwise, you have to remove the fuse.

(3) Reconnect the D41 and the D48 connectors of the collation ECM (smart key ECM ASSY).

(4) Measure the voltage according to the following table.
NOTE:
- Ensure that the entry cancel function (one of the customize setting available for the entry & start system) is not enabled. (Refer to TD - 37)
- Check the customize setting available for the entry & start system as well as the "ignition available area". (Refer to TD - 37)

Inspection terminals	Input/output	Terminal description	Conditions	Specified condition	Related [Data monitor] item
D41-5 (IG2) - D48-11 (GND)	Input	IG power supply	Engine switch OFF →ON (IG)	1 V or less →11 - 14 V	IG
D41-12 (CLG1) - D48-11 (GND)	Output	Output to the driver's side electrical key antenna (the collation ECM (smart key ECM ASSY) sends a request signal (challenge) to the door electrical key antenna to create a detection area).	Procedure: 1. The engine switch is OFF. 2. The electrical key transmitter SUB-ASSY is outside the vehicle. 3. All doors are closed. 4. The electrical key transmitter SUB-ASSY is not inside the vehicle. 5. The electrical key transmitter SUB-ASSY is inside the detection area*1. 6. All doors are locked by a wireless operation.	Pulse generation (Refer to waveform 1)	[Overhead + Driver Side] ([Keyless access system check])
			Procedure: 1. The engine switch is OFF. 2. The electrical key transmitter SUB-ASSY is outside the vehicle. 3. All doors are closed. 4. The electrical key transmitter SUB-ASSY is not inside the vehicle. 5. The electrical key transmitter SUB-ASSY is outside the detection area*2. 6. All doors are locked by a wireless operation.	Pulse generation (Refer to waveform 2)	[Overhead + Driver Side] ([Keyless access system check])
D41-13 (CG1B) - D48-11 (GND)	Output	Output to the driver's door electrical key antenna (terminals located on a component opposite from the CLG1 output terminal)	Procedure: 1. The engine switch is OFF. 2. The electrical key transmitter SUB-ASSY is outside the vehicle. 3. All doors are closed. 4. The electrical key transmitter SUB-ASSY is not inside the vehicle. 5. All doors are locked by a wireless operation.	Pulse generation (Refer to waveform 2)	[Overhead + Driver Side] ([Keyless access system check])

Inspection terminals	Input/output	Terminal description	Conditions	Specified condition	Related [Data monitor] item
D41-11 (CLG2) - D48-11 (GND)	Output	Output to the passenger's side electrical key antenna (the collation ECM (smart key ECM ASSY) sends a request signal (challenge) to the door electrical key antenna to create a detection area).	Procedure: 1. The engine switch is OFF. 2. The electrical key transmitter SUB-ASSY is outside the vehicle. 3. All doors are closed. 4. The electrical key transmitter SUB-ASSY is not inside the vehicle. 5. The electrical key transmitter SUB-ASSY is inside the detection area*1. 6. All doors are locked by a wireless operation.	Pulse generation (Refer to waveform 1)	[Overhead + Passenger Side] ([Keyless access system check])
			Procedure: 1. The engine switch is OFF. 2. The electrical key transmitter SUB-ASSY is outside the vehicle. 3. All doors are closed. 4. The electrical key transmitter SUB-ASSY is not inside the vehicle. 5. The electrical key transmitter SUB-ASSY is outside the detection area*2. 6. All doors are locked by a wireless operation.	Pulse generation (Refer to waveform 2)	[Overhead + Passenger Side] ([Keyless access system check])
D41-10 (CG2B) - D48-11 (GND)	Output	Output to the passenger's door electrical key antenna (terminals located on a component opposite from the CLG2 output terminal)	Procedure: 1. The engine switch is OFF. 2. The electrical key transmitter SUB-ASSY is outside the vehicle. 3. All doors are closed. 4. The electrical key transmitter SUB-ASSY is not inside the vehicle. 5. All doors are locked by a wireless operation.	Pulse generation (Refer to waveform 2)	[Overhead + Passenger Side] ([Keyless access system check])
D41-3 (CLG5) - D48-11 (GND)	Output	Output to the indoor electrical key antenna ASSY no. 1 (front floor)	Procedure: 1. The engine switch is OFF. 2. The electrical key transmitter SUB-ASSY is outside the vehicle. 3. A door is open. 4. A door is closed. 5. Within 30 seconds	Pulse generation (Refer to waveform 3)	[Overhead + Front Room] ([Keyless access system check])
D41-2 (CG5B) - D48-11 (GND)	Output	Output to the indoor electrical key antenna ASSY no. 1 (front floor) (terminals located on a component opposite from the CLG5 output terminal)	Procedure: 1. The engine switch is OFF. 2. The electrical key transmitter SUB-ASSY is not inside the vehicle. 3. A door is open. 4. A door is closed. 5. Within 30 seconds	Pulse generation (Refer to waveform 3)	[Overhead + Front Room] ([Keyless access system check])
D41-20 (TSW1) - D48-11 (GND)	Input	Driver's door lock sensor signal input (a signal is sent from the door lock sensor on the front door outer handle ASSY to the collation ECM (smart key ECM ASSY). The collation ECM (smart key ECM ASSY) sends out a 12 V pulse waveform from the terminal TSW every 40 milliseconds. Once the door lock sensor is touched, the pulse is shorted to the ground.	Procedure: 1. The engine switch is OFF. 2. The electrical key transmitter SUB-ASSY is outside the vehicle. 3. All doors are closed. 4. Driver's door lock sensor, not touched →touched	Pulse generation (Refer to waveform 4)	[D-Door Trigger Switch]

TD

Inspection terminals	Input/output	Terminal description	Conditions	Specified condition	Related [Data monitor] item
D41-8 (TSW2) - D48-11 (GND)	Input	Passenger's door lock sensor signal input (a signal is sent from the door lock sensor on the front door outer handle ASSY to the collation ECM (smart key ECM ASSY). The collation ECM (smart key ECM ASSY) sends out a 12 V pulse waveform from the terminal TSW every 40 milliseconds. Once the door lock sensor is touched, the pulse is shorted to the ground.	Procedure: 1. The engine switch is OFF. 2. The electrical key transmitter SUB-ASSY is outside the vehicle. 3. All doors are closed. 4. Passenger's door lock sensor, not touched →touched	Pulse generation (Refer to waveform 4)	[P-Door Trigger Switch]
D41-22 (SEN1) - D48-11 (GND)	Input	Driver's door unlock sensor signal input (if you touch the touch sensor when the system is in unlock standby mode, the door electrical key antenna sends a touch sensor input signal (detection signal) to the collation ECM (smart key ECM ASSY)).	Procedure: 1. The engine switch is OFF. 2. The electrical key transmitter SUB-ASSY is outside the vehicle. 3. All doors are locked. 4. The electrical key transmitter SUB-ASSY is not in the appropriate range from the vehicle. 5. Driver's door unlock sensor, not touched →touched	Pulse generation (Refer to waveform 4)	[D-Door Touch Sensor]
D41-23 (SEN2) - D48-11 (GND)	Input	Passenger's door unlock sensor signal input (if you touch the touch sensor when the system is in unlock standby mode, the door electrical key antenna sends a touch sensor input signal (detection signal) to the collation ECM (smart key ECM ASSY)).	Procedure: 1. The engine switch is OFF. 2. The electrical key transmitter SUB-ASSY is outside the vehicle. 3. All doors are locked. 4. The electrical key transmitter SUB-ASSY is not in the appropriate range from the vehicle. 5. Passenger's door unlock sensor, not touched →touched	Pulse generation (Refer to waveform 4)	[P-Door Touch Sensor]
D40-27 (TSW5) - D48-11 (GND)	Input	Trunk opening switch signal input	Trunk opening switch ASSY, OFF →ON	Pulse generation (Refer to waveform 4)	[Tr/B-Door Unlock SW]
D40-11 (CLG6) - D48-11 (GND)	Output	Output to the indoor electrical key antenna ASSY no. 2 (rear floor)	Procedure: 1. The engine switch is OFF. 2. The electrical key transmitter SUB-ASSY is not inside the vehicle. 3. A door is open. 4. A door is closed. 5. Within 30 seconds	Pulse generation (Refer to waveform 3)	[Overhead + Rear Room] ([Keyless access system check])
D40-10 (CG6B) - D48-11 (GND)	Output	Output to the indoor electrical key antenna ASSY no. 2 (rear floor) (terminals located on a component opposite from the CLG6 output terminal).	Procedure: 1. The engine switch is OFF. 2. The electrical key transmitter SUB-ASSY is not inside the vehicle. 3. A door is open. 4. A door is closed. 5. Within 30 seconds	Pulse generation (Refer to waveform 3)	[Overhead + Rear Room] ([Keyless access system check])
D40-9 (CLG7) - D48-11 (GND)	Output	Output to the indoor electrical key antenna ASSY no. 3 (antenna located inside the trunk)	Procedure: 1. The engine switch is OFF. 2. The electrical key transmitter SUB-ASSY is not inside the vehicle. 3. A door is open. 4. A door is closed. 5. Within 30 seconds	Pulse generation (Refer to waveform 3)	[Overhead + Trunk] ([Keyless access system check])

Inspection terminals	Input/output	Terminal description	Conditions	Specified condition	Related [Data monitor] item
D40-8 (CG7B) - D48-11 (GND)	Output	Output to the indoor electrical key antenna ASSY no. 3 (antenna located inside the trunk) (terminals located on a component opposite from the CLG7 output terminal)	Procedure: 1. The engine switch is OFF. 2. The electrical key transmitter SUB-ASSY is not inside the vehicle. 3. A door is open. 4. A door is closed. 5. Within 30 seconds	Pulse generation (Refer to waveform 3)	[Overhead + Trunk] ([Keyless access system check])
D41-19 (POS1) - D48-11 (GND)	Output	Driver's door unlock sensor power (12 v (the voltage drops once the engine switch is turned ON (IG))).	Engine switch OFF →ON (IG)	9 - 14 V →2 V or less	-
D41-21 (POS2) to D48-11 (GND)	Output	Passenger's door unlock sensor power (12 v (the voltage drops once the engine switch is turned ON (IG))).	Engine switch OFF →ON (IG)	9 - 14 V →2 V or less	-
D40-5 (RCO) - D48-11 (GND)	Output	Output to the door control receiver (power for the door control receiver. When the receiver initiates operation, the collation ECM (smart key ECM ASSY) outputs 5 V).	Procedure: 1. The engine switch is OFF. 2. The electrical key transmitter SUB-ASSY is outside the vehicle. 3. The electrical key transmitter SUB-ASSY is outside the detection area*2. 4. Lock/unlock button on the electrical key transmitter SUB-ASSY, not pressed →pressed	Pulse generation (Refer to waveform 5)	-
D40-17 (RDA) - D48-11 (GND)	Input	The door control receiver checks the data transmitted from the electrical key transmitter SUB-ASSY. The door control receiver then transmits the data to the ECM and intermittently shorts the 12 V signal sent from the collation ECM (smart key ECM ASSY) to the ground.	Description: 1. The engine switch is OFF. 2. All doors are locked. 3. The electrical key transmitter SUB-ASSY is outside the detection area*2 and inside the indoor wireless function operating range*3. 4. Lock/unlock button on the electrical key transmitter SUB-ASSY, not pressed →pressed	Pulse generation (Refer to waveform 6)	-
D40-19 (RSSI) - D48-11 (GND)	Input	Communication channel switching circuit	Description: 1. The engine switch is OFF. 2. All doors are locked. 3. The electrical key transmitter SUB-ASSY is outside the detection area*2 and inside the indoor wireless function operating range*3. 4. Lock/unlock button on the electrical key transmitter SUB-ASSY, not pressed →pressed	Pulse generation (Refer to waveform 7)	
D40-2 (CLG8) - D48-11 (GND)	Output	Output to the electrical key antenna (trunk exterior antenna)	Procedure: 1. The engine switch is OFF. 2. The electrical key transmitter SUB-ASSY is outside the vehicle. 3. All doors are closed. 4. Trunk opening switch ASSY, OFF →ON	Pulse generation (Refer to waveform 8)	[Overhead + Trunk] ([Keyless access system check])
D40-1 (CG8B) - D48-11 (GND)	Output	Output to the electrical key antenna (trunk exterior antenna) (terminals located on a component opposite from the CLG8 output terminal)	Procedure: 1. The engine switch is OFF. 2. The electrical key transmitter SUB-ASSY is outside the vehicle. 3. All doors are closed. 4. Trunk opening switch ASSY, OFF →ON	Pulse generation (Refer to waveform 8)	[Overhead + Trunk] ([Keyless access system check])

*1: For a detailed description about the inside of the entry function detection area, refer to [Operation check]. (Refer to TD - 31)

*2: For a detailed description about the outside of the entry function detection area, refer to [Operation check]. (Refer to TD - 31)

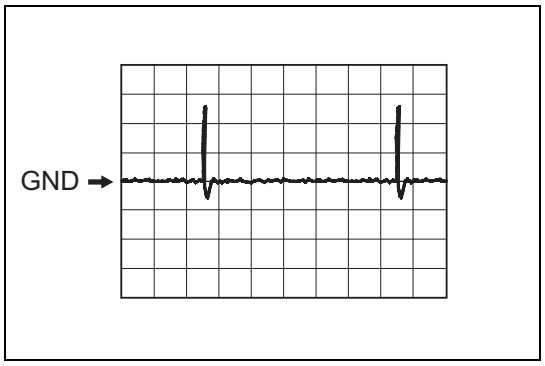

(5) Using an oscilloscope, check waveform 1.
NOTE:
The oscilloscope waveform shown in the figure is an example for reference. The noise and chattering are not shown in the figure.
(a)Waveform 1 (reference)

Measuring conditions

Item	Contents
Tester connection	•D41-12 (CLG1) - D48-11 (GND) •D41-11 (CLG2) - D48-11 (GND)
Tool setting	2 V/DIV., 500 ms/DIV.
Conditions	Procedure: 1.The engine switch is OFF. 2.The electrical key transmitter SUB-ASSY is outside the vehicle. 3.All doors are closed. 4.The electrical key transmitter SUB-ASSY is not inside the vehicle. 5.The electrical key transmitter SUB-ASSY is inside the detection area*. 6.All doors are locked by a wireless operation.

*: For a detailed description on inside the entry function detection area, refer to "Operation check". (Refer to TD - 31)

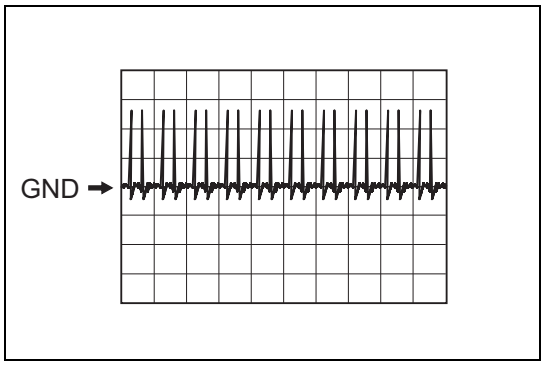

(6) Using an oscilloscope, check waveform 2.
NOTE:
The oscilloscope waveform shown in the figure is an example for reference. The noise and chattering are not shown in the figure.
(a)Waveform 2 (reference)

Measuring conditions

Item	Contents
Tester connection	•D41-12 (CLG1) - D48-11 (GND) •D41-11 (CLG2) - D48-11 (GND)
Tool setting	2 V/DIV., 500 ms/DIV.
Conditions	Procedure: 1.The engine switch is OFF. 2.The electrical key transmitter SUB-ASSY is outside the vehicle. 3.All doors are closed. 4.The electrical key transmitter SUB-ASSY is not inside the vehicle. 5.The electrical key transmitter SUB-ASSY is outside the detection area*. 6.All doors are locked by a wireless operation.

*: For a detailed description on inside the entry function detection area, refer to "Operation check". (Refer to TD - 31)

Measuring conditions

Item	Contents
Tester connection	•D41-13 (CG1B) - D48-11 (GND) •D41-10 (CG2B) - D48-11 (GND)
Tool setting	2 V/DIV., 500 ms/DIV.
Conditions	Procedure: 1.The engine switch is OFF. 2.The electrical key transmitter SUB-ASSY is outside the vehicle. 3.All doors are closed. 4.The electrical key transmitter SUB-ASSY is not inside the vehicle. 5.All doors are locked by a wireless operation.

TD

*: For a detailed description on inside the entry function detection area, refer to "Operation check". (Refer to TD - 31)

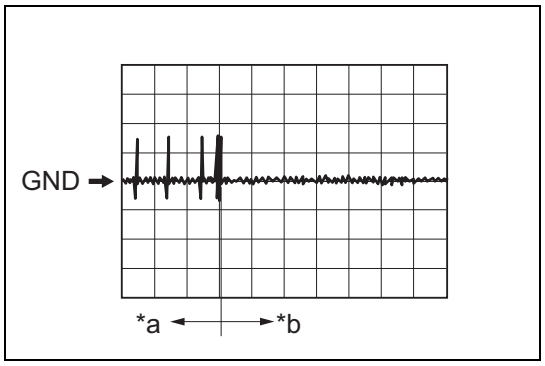

(7) Using an oscilloscope, check waveform 3.
NOTE:
The oscilloscope waveform shown in the figure is an example for reference. The noise and chattering are not shown in the figure.

Captions in illustration

*a	A door is open.
*b	30 seconds after the closing of a door

(a)Waveform 3 (reference)

Measuring conditions

Item	Contents
Tester connection	•D41-3 (CLG5) - D48-11 (GND) •D41-2 (CG5B) - D48-11 (GND) •D40-11 (CLG6) - D48-11 (GND) •D40-10 (CG6B) - D48-11 (GND) •D40-9 (CLG7) - D48-11 (GND) •D40-8 (CG7B) - D48-11 (GND)
Tool setting	2 V/DIV., 500 ms/DIV.
Conditions	Procedure: 1.The engine switch is OFF. 2.The electrical key transmitter SUB-ASSY is not inside the vehicle. 3.A door is open. 4.A door is closed. 5.Within 3 seconds

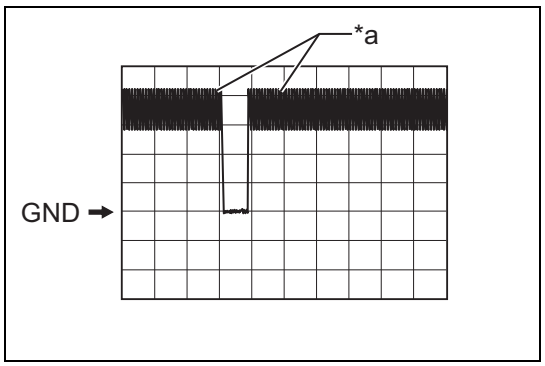

(8) Using an oscilloscope, check waveform 4.
NOTE:
The oscilloscope waveform shown in the figure is an example for reference. The noise and chattering are not shown in the figure.

Captions in illustration

*a	Sampling is actually performed.

(a)Waveform 4 (reference)

Measuring conditions

Item	Contents
Tester connection	D41-20 (TSW1) - D48-11 (GND)
Tool setting	2 V/DIV., 500 ms/DIV.
Conditions	Procedure: 1.The engine switch is OFF. 2.The electrical key transmitter SUB-ASSY is outside the vehicle. 3.All doors are closed. 4.Driver's door lock sensor, not touched →touched

Measuring conditions

Item	Contents
Tester connection	D41-8 (TSW2) - D48-11 (GND)
Tool setting	2 V/DIV., 500 ms/DIV.
Conditions	Procedure: 1.The engine switch is OFF. 2.The electrical key transmitter SUB-ASSY is outside the vehicle. 3.All doors are closed. 4.Passenger's door lock sensor, not touched →touched

Measuring conditions

Item	Contents
Tester connection	D41-22 (SEN1) - D48-11 (GND)

Item	Contents
Tool setting	2 V/DIV., 500 ms/DIV.
Conditions	Procedure: 1.The engine switch is OFF. 2.The electrical key transmitter SUB-ASSY is outside the vehicle. 3.All doors are locked. 4.The electrical key transmitter SUB-ASSY is not in the appropriate range from the vehicle. 5.Driver's door lock sensor, not touched →touched

Measuring conditions

Item	Contents
Tester connection	D41-23 (SEN2) - D48-11 (GND)
Tool setting	2 V/DIV., 500 ms/DIV.
Conditions	Procedure: 1.The engine switch is OFF. 2.The electrical key transmitter SUB-ASSY is outside the vehicle. 3.All doors are locked. 4.The electrical key transmitter SUB-ASSY is not in the appropriate range from the vehicle. 5.Passenger's door unlock sensor, not touched →touched

Measuring conditions

Item	Contents
Tester connection	D40-27 (TSW5) - D48-11 (GND)
Tool setting	2 V/DIV., 500 ms/DIV.
Conditions	Trunk opening switch ASSY, OFF →ON

(9) Using an oscilloscope, check waveform 5.
NOTE:
The oscilloscope waveform shown in the figure is an example for reference. The noise and chattering are not shown in the figure.

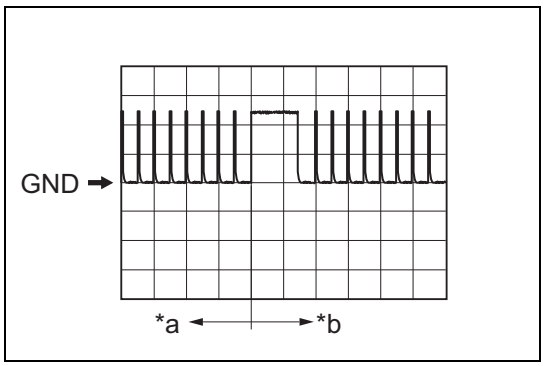

Captions in illustration

*a	Before the lock/unlock button on the electrical key transmitter SUB-ASSY is pressed
*b	After the lock/unlock button on the electrical key transmitter SUB-ASSY is pressed

(a)Waveform 5 (reference)

Measuring conditions

Item	Contents
Tester connection	D40-5 (RCO) - D48-11 (GND)
Tool setting	2 V/DIV., 500 ms/DIV.
Conditions	Procedure: 1.The engine switch is OFF. 2.The electrical key transmitter SUB-ASSY is outside the vehicle. 3.The electrical key transmitter SUB-ASSY is outside the detection area*1 and inside the indoor wireless function operating range*2. 4.Lock/unlock button on the electrical key transmitter SUB-ASSY, not pressed →pressed

*1: For a detailed description about the outside of the entry function detection area, refer to [Operation check]. (Refer to TD - 31)

*2: For a detailed description about the inside of the wireless function operating range, refer to [Operation check]. (Refer to TD - 31)

TD

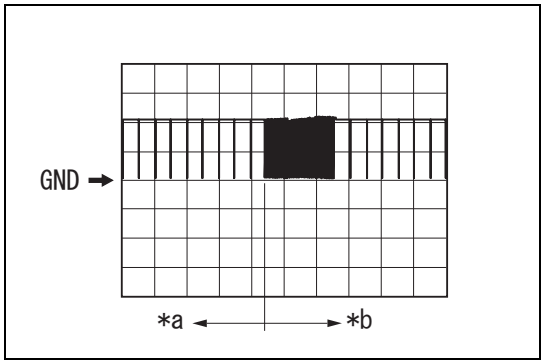

(10) Using an oscilloscope, check waveform 6.

NOTE:

The oscilloscope waveform shown in the figure is an example for reference. The noise and chattering are not shown in the figure.

Captions in illustration

*a	Before the lock/unlock button on the electrical key transmitter SUB-ASSY is pressed
*b	After the lock/unlock button on the electrical key transmitter SUB-ASSY is pressed

(a) Waveform 6 (reference)

Measuring conditions

Item	Contents
Tester connection	D40-17 (RDA) - D48-11 (GND)
Tool setting	5V/DIV., 500 ms/DIV.
Conditions	Procedure: 1.The engine switch is OFF. 2.All doors are locked. 3.The electrical key transmitter SUB-ASSY is outside the detection area*1 and inside the indoor wireless function operating range*2. 4.Lock/unlock button on the electrical key transmitter SUB-ASSY, not pressed →pressed

*1: For a detailed description about the outside of the entry function detection area, refer to [Operation check]. (Refer to TD - 31)

*2: For a detailed description on inside the wireless function operating range, refer to "Operation check". (Refer to TD - 31)

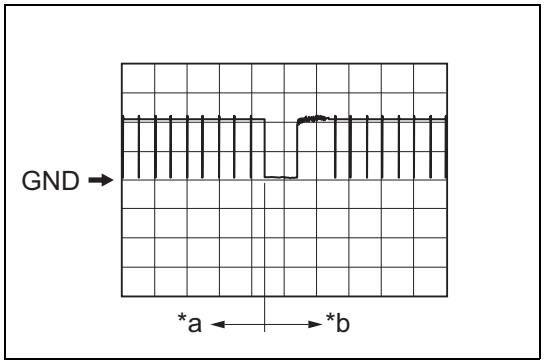

(11) Using an oscilloscope, check waveform 7.

NOTE:

The oscilloscope waveform shown in the figure is an example for reference. The noise and chattering are not shown in the figure.

Captions in illustration

*a	Before the lock/unlock button on the electrical key transmitter SUB-ASSY is pressed
*b	After the lock/unlock button on the electrical key transmitter SUB-ASSY is pressed

(a) Waveform 7 (reference)

Measuring conditions

Item	Contents
Tester connection	D40-19 (RSSI) - D48-11 (GND)
Tool setting	5V/DIV., 500 ms/DIV.
Conditions	Procedure: 1.The engine switch is OFF. 2.All doors are locked. 3.The electrical key transmitter SUB-ASSY is outside the detection area*1 and inside the indoor wireless function operating range*2. 4.Lock/unlock button on the electrical key transmitter SUB-ASSY, not pressed →pressed

*1: For a detailed description about the outside of the entry function detection area, refer to [Operation check]. (Refer to TD - 31)

*2: For a detailed description about the inside of the wireless function operating range, refer to [Operation check]. (Refer to TD - 31)

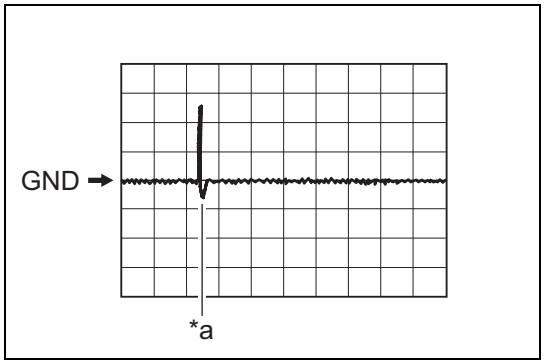

(12) Using an oscilloscope, check waveform 8.

NOTE:

The oscilloscope waveform shown in the figure is an example for reference. The noise and chattering are not shown in the figure.

Captions in illustration

*a	Change the power mode to IG OFF, close the door, and turn the trunk opening switch ASSY OFF and then ON.

(a) Waveform 8 (reference)

Measuring conditions

Item	Contents
Tester connection	•D40-2 (CLG8) - D48-11 (GND) •D40-1 (CG8B) - D48-11 (GND)
Tool setting	2 V/DIV., 500 ms/DIV.
Conditions	Procedure: 1.The engine switch is OFF. 2.The electrical key transmitter SUB-ASSY is outside the vehicle. 3.All doors are closed. 4.Trunk opening switch ASSY, OFF →ON

TD

2. Check the instrument panel junction block ASSY and the main body ECM (multiplex network body ECM).

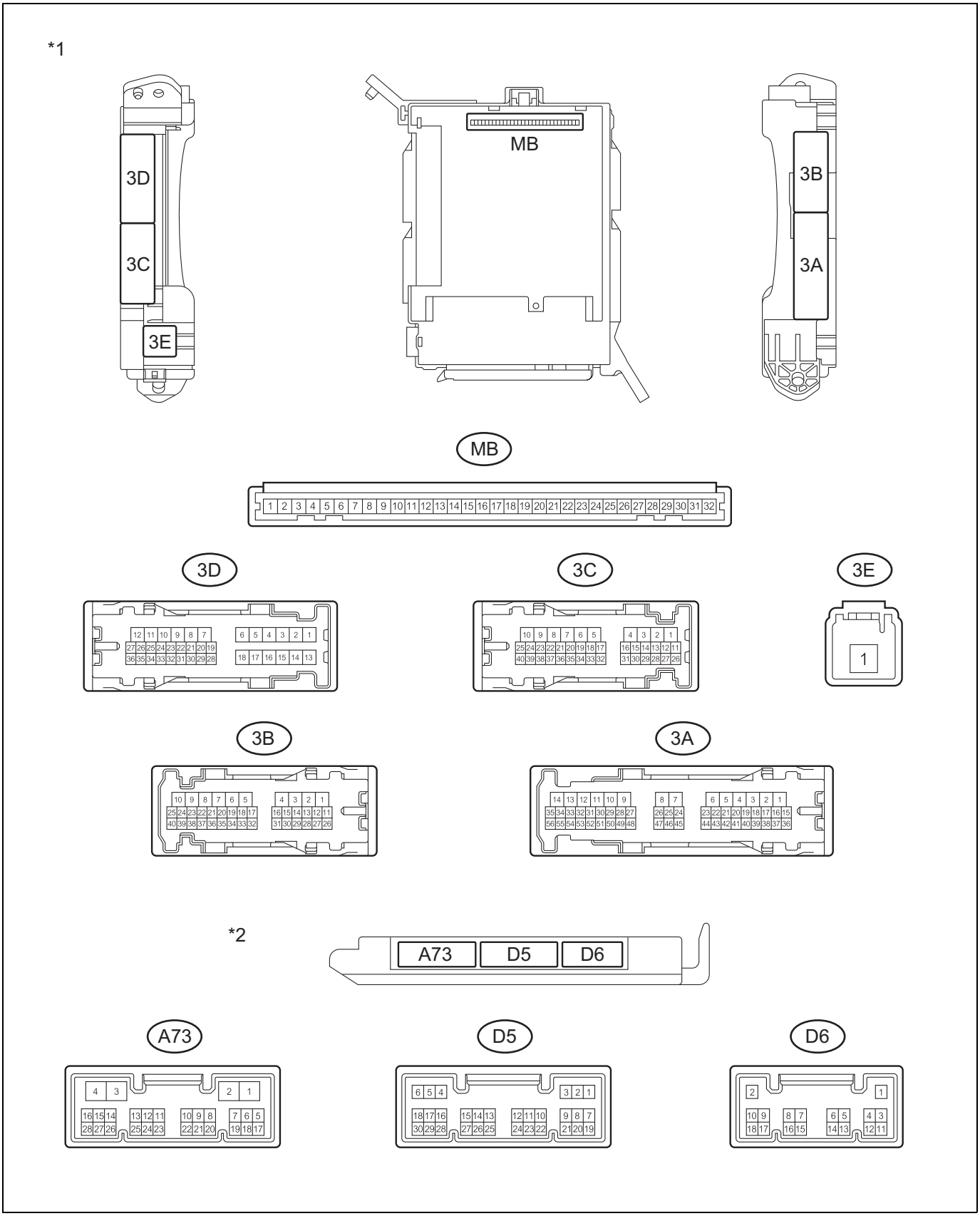

Captions in illustration

*1	Instrument panel junction block ASSY	*2	Main body ECM (multiplex network body ECM)

(1) Remove the main body ECM (multiplex network body ECM) from the instrument panel junction block ASSY.
(2) Measure the voltage and resistance according to the following table.

Terminal No. (symbol)	Input/output	Terminal description	Conditions	Specified condition	Related [Data monitor] item
MB-1 - chassis ground	Input	Battery power supply	Always	11 - 14 V	-
MB-8 - chassis ground	Input	Engine switch power supply	Engine switch is ON (IG)	11 - 14 V	[Ignition]
			The engine switch is OFF.	1 V or less	
MB-9 - Chassis ground	Input	ACC power supply	The engine switch is on (ACC).	11 - 14 V	[ACC SW]
			The engine switch is OFF.	1 V or less	
MB-11 - chassis ground	Input	Ground	Always	1 Ωor less	-
MB-32 - Chassis ground	Input	Battery power supply	Always	11 - 14 V	-
D6-1 - Chassis ground	-	Ground	Always	1 Ωor less	-
A73-4 - Chassis ground	-	Ground	Always	1 Ωor less	-

If you cannot get the specified result, there could be a problem in the wiring harnesses.

(3) Install the main body ECM (multiplex network body ECM) to the instrument panel junction block ASSY. (Refer to PD - 25)

(4) Refer to the value shown in table below and measure the voltage and waveform.

Terminal No. (symbol)	Input/output	Terminal description	Conditions	Specified condition	Related [Data monitor] item
3A-28 - chassis ground	Input	Driver's side courtesy light switch	Driver's door is open.	1 V or less	[D Door Courtesy SW]
			Driver's door is closed	Pulse generation	
3B-13 - chassis ground	Input	Passenger's side courtesy light switch	The passenger's door is open.	1 V or less	[Door Courtesy SW]
			The passenger's door is closed.	Pulse generation	
3D-26 - chassis ground	Input	Trunk courtesy light switch	The trunk is open.	1 V or less	[Luggage Courtesy SW]
			Change the power mode to IG OFF, close the door, and close the trunk.	11 - 14 V	
3B-2 - chassis ground	Output	Door lock motor lock drive output (driver's side)	The driver's side control switch is not pressed, and the driver's door key cylinder is in the neutral position*1.	1 V or less	-
			The driver's door control switch is pushed to the lock position, or the driver's door key cylinder is in the lock position*1.	11 - 14 V	
3B-3 - chassis ground	Output	Door lock motor lock drive output (passenger's side)	The driver's side control switch is not pressed, and the driver's door key cylinder is in the neutral position*1.	1 V or less	-
			The driver's door control switch is pushed to the lock position, or the driver's door key cylinder is in the lock position*1.	11 - 14 V	
3B-6 - chassis ground	Output	Door lock motor lock drive output (trunk)	The trunk open button on the electrical key transmitter SUB-ASSY is not pressed.	1 V or less	The trunk is open.
			The trunk open button on the electrical key transmitter SUB-ASSY is pressed.	11 - 14 V	
3B-1 - chassis ground	Output	Door lock motor unlock drive output (driver's side)	The driver's side control switch is not pressed, and the driver's door key cylinder is in the neutral position*.	1 V or less	-
			The driver's door control switch is pushed to the unlock position, or the driver's door key cylinder is in the unlock position*.	11 - 14 V	

TD

Terminal No. (symbol)	Input/output	Terminal description	Conditions	Specified condition	Related [Data monitor] item
3B-4 - chassis ground	Output	Door lock motor unlock drive output (passenger's side)	The driver's side control switch is not pressed, and the driver's door key cylinder is in the neutral position*.	1 V or less	-
			The driver's door control switch is pushed to the unlock position, or the driver's door key cylinder is in the unlock position*.	11 - 14 V	
D6-11 - Chassis ground	Input	Driver's door unlock detection switch input	Driver's door is locked.	1 V or less	[D-Door Lock Pos SW]
			Change the power mode to IG OFF, close all doors, and lock the driver's door.	Pulse generation (Refer to waveform 1 or waveform 2)	
D6-12 - Chassis ground	Input	Passenger's door unlock detection switch input	Passenger's door is unlocked	1 V or less	[P-Door Lock Pos SW]
			Change the power mode to IG OFF, close all doors, and lock the passenger's door.	Pulse generation (Refer to waveform 1 or waveform 2)	

*: w/ key link switch

(5) Inspect using an oscilloscope.

CAUTION:

The oscilloscope waveform shown in the figure is an example for reference. The noise and chattering are not shown in the figure.

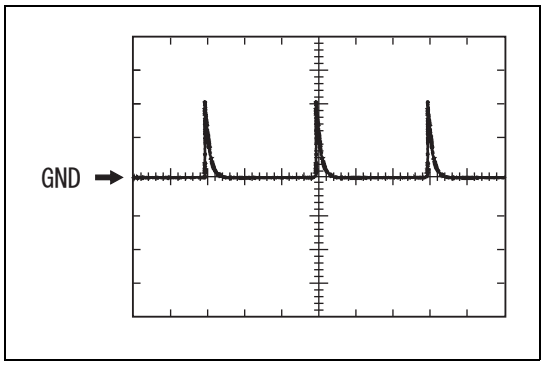

(a)Waveform 1 (reference)

Item	Contents
Measuring terminal	D6-11 (LSFD) ←→Chassis ground
Equipment setting	5 V/DIV., 20 ms/DIV.
Measuring conditions	IG OFF, all doors closed, driver's door locked

Item	Contents
Measuring terminal	D6-12 (LSFP) ←→Chassis ground
Equipment setting	5 V/DIV., 20 ms/DIV.
Measuring conditions	IG OFF, all doors closed, passenger's door locked

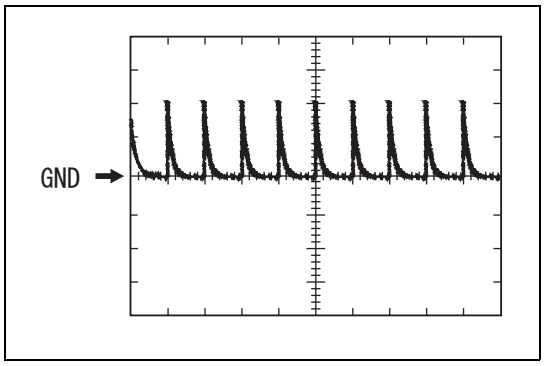

(b)Waveform 2 (reference)

Item	Contents
Measuring terminal	D6-11 (LSFD) ←→Chassis ground
Equipment setting	5 V/DIV., 20 ms/DIV.
Measuring conditions	IG OFF, all doors closed, driver's door locked

Item	Contents
Measuring terminal	D6-12 (LSFP) ←→Chassis ground
Equipment setting	5 V/DIV., 20 ms/DIV.
Measuring conditions	IG OFF, all doors closed, passenger's door locked

DIAGNOSIS SYSTEM

1. CHECK DLC3
   (1) Check the DLC3.
2. INSPECT BATTERY VOLTAGE
   (1) Measure the battery voltage.
   Standard voltage: 11 to 14V
   If the voltage is below 11V, recharge or replace the battery.

DTC CHECK / CLEAR

1. CHECK DTC
   (1) Connect the SSM4 to the DLC3.

(2) Turn the engine switch on (IG).
(3) Turn the SSM4 on.
(4) Enter the following menus: [Keyless Access(Collation ECM)] →[DTC]
(5) Check for DTCs.

2. CLEAR DTC
(1) Connect the SSM4 to the DLC3.
(2) Turn the engine switch on (IG).
(3) Turn the SSM4 on.
(4) Enter the following menus: [Keyless Access(Collation ECM)] →[DTC] →[Clear Memory]
(5) Clear the DTCs.

Data monitor / active test

1. Data monitor

CAUTION:
In the following table, the value listed in the normal condition is a reference value. Do not depend on reference value only when judging if the part is faulty.
NOTE:
By using the SSM4 and reading [Data monitor], you can read the statuses and values for switches, sensors, actuators, and other items without removing parts. Because the non-intrusive inspection allows you to read the intermittent statuses or signals without interfering with parts or lines, it is very convenient. Diagnostic time can be saved by reading the [Data monitor] information at the initial stage of the troubleshooting.

(1) Connect the SSM4 to the DLC3.
(2) Turn the ignition switch to ON.
(3) Turn on the SSM4.
(4) Enter the following menus: [Keyless Access(Collation ECM)] →[Data monitor], or [Body Control] →[Data monitor], or [Brake Control System] →[Data monitor]
(5) Based on the contents of the SSM4 display, read the [Data monitor].

TD

Entry & Start

Item Name	Description/display range	Normal value	Remarks
[D seat unlock person sensor]	Driver's door outer handle (unlock sensor) status Display range: OFF/ON	[OFF]: Driver's door handle (unlock sensor) is not touched. [ON]: Driver's door handle (unlock sensor) is touched.	• Even when you keep your fingers on the unlock sensor, [ON] is displayed only momentarily. • Use this item to check if there is any abnormality in the unlock sensor when the smart unlock function does not work.
[P seat unlock person sensor]	Passenger's door outer handle (unlock sensor) status Display range: OFF/ON	[OFF]: Passenger's door handle (unlock sensor) is not touched. [ON]: Passenger's door handle (unlock sensor) is touched.	• Even when you keep your fingers on the unlock sensor, [ON] is displayed only momentarily. • Use this item to check if there is any abnormality in the unlock sensor when the smart unlock function does not work.
[D seat lock person sensor]	Driver's door outer handle (lock sensor) status Display range: OFF/ON	[OFF]: Driver's door outer handle (lock sensor) is not touched. [ON]: Driver's door outer handle (lock sensor) is touched.	• Even when you keep your fingers on the lock sensor, [ON] is displayed only momentarily. • Use this item to check if there is any abnormality in the lock sensor when the smart lock function does not work.
[P seat lock person sensor]	Passenger's door outer handle (lock sensor) status Display range: OFF/ON	[OFF]: Passenger's door outer handle (lock sensor) is not touched. [ON]: Passenger's door outer handle (lock sensor) is touched.	• Even when you keep your fingers on the lock sensor, [ON] is displayed only momentarily. • Use this item to check if there is any abnormality in the lock sensor when the smart lock function does not work.
[Trunk lid/ Rear gate unlock SW]	Trunk opening switch ASSY status Display range: OFF/ON	[OFF]: The trunk opening switch ASSY is not pressed. [ON]: The trunk opening switch ASSY is pressed.	Use this item to check if there is any abnormality in the unlock switch when the trunk unlock function does not work.

Item Name	Description/display range	Normal value	Remarks
[Ignition]	IG power status Display range: OFF/ON	OFF: IG OFF ON: IG ON	• Use this item to identify what caused the engine switch operation malfunction • Get on the vehicle carrying the electrical key transmitter SUB-ASSY with you, and press the engine switch twice without depressing the brake pedal (transmission A/T) or the clutch pedal (transmission M/T). The power mode changes to IG ON if the key ID code transmitted by the electrical key transmitter SUB-ASSY matches that stored in the collation ECM (smart key ECM ASSY).
[Vehicle ID difference]	The key number is incorrect. Display range: [Yes]/[No]	[Yes]: Communication status is abnormal. [No]: Communication status is normal.	The vehicle ID registered to the vehicle is different from that registered to the electrical key transmitter SUB-ASSY. (If an electrical key transmitter SUB-ASSY of another vehicle enters a detection area created outside the vehicle while doors are locked, "Yes" is displayed for "Judgment: Wrong key No. (vehicle ID)" (an item under [Data monitor]).) Probable causes • An attempt might have been made to use an electrical key transmitter SUB-ASSY of another vehicle. • Communication error due to interference from external radio waves • Defect in the electrical key transmitter SUB-ASSY or the collation ECM (smart key ECM ASSY)
[No response]	No response Display range: [Yes]/[No]	[Yes]: Communication status is abnormal. [No]: Communication status is normal.	Although the vehicle ID of the vehicle matches that of the electrical key transmitter SUB-ASSY, no response is returned from the electrical key transmitter SUB-ASSY. (When the lock switch or the engine switch is pressed, if the electrical key transmitter SUB-ASSY of the vehicle is not inside the detection area, or if the collation is NG due to battery drain, "Yes" is displayed for "Judgment: No response" (an item under [Data monitor]). Furthermore, if external radio waves are present in the LF band (134.2 kHz) transmitted by the vehicle or the RF band transmitted by the electrical key transmitter SUB-ASSY, "Yes" might be displayed for "Judgment: No response" (an item under [Data monitor]). Probable causes • An attempt might have been made to use an electrical key transmitter SUB-ASSY of another vehicle. • Defect in the electrical key transmitter SUB-ASSY or the collation ECM (smart key ECM ASSY) • External radio waves

Item Name	Description/display range	Normal value	Remarks
[Incorrect response code, format]	The code format is incorrect. Display range: [Yes]/[No]	[Yes]: Communication status is abnormal. [No]: Communication status is normal.	Data transmitted from the electrical key transmitter SUB-ASSY contained an error. (If external radio waves are present in the RF band radio waves transmitted by the electrical key transmitter SUB-ASSY, "Yes" might be displayed for "Judgment: Incorrect code format", "Judgment: No response", "Judgment: Incorrect ID code", and "Judgment: Incorrect challenge code" (items under [Data monitor]). Probable causes • An attempt might have been made to use an electrical key transmitter SUB-ASSY of another vehicle. • Defect in the electrical key transmitter SUB-ASSY or the collation ECM (smart key ECM ASSY) • External radio waves
[Exhausted battery]	The electrical key transmitter SUB-ASSY battery is drained. Display range: [Yes]/[No]	[Yes]: The battery is drained. [No]: The battery is not drained.	The electronic key transmitter SUB-ASSY transmits voltage to the collation ECM (smart key ECM ASSY). If the voltage being transmitted is 2.1 V or less, the collation ECM (smart key ECM ASSY) displays "Yes" for "Judgment: Exhausted battery" (an item under [Data monitor]). NOTE: Make sure that the transmitter battery is at the room temperature when you check this item, which is located under [Data monitor]. (Example: At 20 °C below zero, [Yes] might be displayed even for a new transmitter battery.)
[Response code; Different ID]	The ID code is incorrect. Display range: [Yes]/[No]	[Yes]: Communication status is abnormal. [No]: Communication status is normal.	The ID code registered to the vehicle is different from that registered to the electrical key transmitter SUB-ASSY. (If external radio waves are present in the RF band transmitted by the electrical key transmitter SUB-ASSY, "Yes" might be displayed for "Judgment: Incorrect code format", "Judgment: No response", "Judgment: Incorrect ID code", and "Judgment: Incorrect challenge code" (items under [Data monitor]). Probable causes • An attempt might have been made to use an electrical key transmitter SUB-ASSY of another vehicle. • Defect in the electrical key transmitter SUB-ASSY or the collation ECM (smart key ECM ASSY) • External radio waves

Item Name	Description/display range	Normal value	Remarks
[Response code; Different challenge code]	The challenge code is incorrect. Display range: [Yes]/[No]	[Yes]: Communication status is abnormal. [No]: Communication status is normal.	The electrical key transmitter SUB-ASSY returns a wrong respond code in response to the challenge code transmitted from the vehicle. (If external radio waves are present in the RF band transmitted by the electrical key transmitter SUB-ASSY, "Yes" might be displayed for "Judgment: Incorrect code format", "Judgment: No response", "Judgment: Incorrect ID code", and "Judgment: Incorrect challenge code" (items under [Data monitor]). Probable causes • Defect in the electrical key transmitter SUB-ASSY or the collation ECM (smart key ECM ASSY) • External radio waves
[Number of times the vehicle enters 10-minute power saving mode]	Number of times power save control mode is activated (power save control mode is activated when the electrical key transmitter SUB-ASSY stays inside the exterior detection area for 10 minutes or more). Display range: 0 to 255	0 to 255	As long as the electrical key transmitter SUB-ASSY stays inside the key detection area outside the vehicle, there is frequent communication between the vehicle and the electrical key transmitter SUB-ASSY, which can overload the transmitter battery. If this state lasts for 10 minutes or longer, the exterior antenna that is detecting the electrical key transmitter SUB-ASSY stops transmitting signals to prevent the transmitter battery from draining out. The system can be resumed by a wireless lock/unlock operation or a mechanical key unlock operation.
[Number of times the vehicle enters 5-day power saving mode]	Number of times power save control 1 mode (which disables periodic signal transmission from the exterior transmitter) is activated (power save control 1 mode is activated when the engine is never started for five or more days). Display range: 0 to 255	0 to 255	-
[Number of times the vehicle enters 14-day power saving mode]	Number of times power save control 2 mode (which disables the door outer handle lock/unlock sensors of all doors except the driver's door) is activated (power save control 2 mode is activated when the engine is never started for 14 or more days). Display range: 0 to 255	0 to 255	-

TD

Item Name	Description/display range	Normal value	Remarks
[Incorrect ID code]	The wireless ID code is incorrect. Display range: [Yes]/[No]	[Yes]: Communication status is abnormal. [No]: Communication status is normal.	The ID code registered to the vehicle is different from that registered to the electrical key transmitter SUB-ASSY. (When the received wireless ID is inconsistent with that of the registered electrical key transmitter SUB-ASSY, "Yes" is displayed for "Judgment: Incorrect wireless ID code" (an item under [Data monitor]). If a wireless signal of another vehicle is received, "Yes" is displayed for "Judgment: Incorrect ID code" (an item under [Data monitor]). Probable causes • An attempt might have been made to use an electrical key transmitter SUB-ASSY of another vehicle. • Communication error due to interference from external radio waves • Defect in the electrical key transmitter SUB-ASSY or the collation ECM (smart key ECM ASSY)
[Incorrect ROL code]	The rolling code is incorrect. Display range: [Yes]/[No]	[Yes]: Communication status is abnormal. [No]: Communication status is normal.	The ROL code registered to the vehicle is different from that registered to the electrical key transmitter SUB-ASSY. Probable causes • A switch on the electrical key transmitter SUB-ASSY was pressed 100 times or more in a location where radio waves cannot reach the vehicle. • Communication error due to interference from external radio waves • Defect in the electrical key transmitter SUB-ASSY or the collation ECM (smart key ECM ASSY)
[Wireless Signal Encryption Support]	Wireless/smart signal encryption support status Display range: [Yes]/[No]	[Yes]: Wireless/smart signal encryption is supported. [No]: Wireless/smart signal encryption is not supported.	-
[Immobilizer]	This item indicates the engine immobilizer system status, as determined by the smart key ECM ASSY (collation ECM). Display range: [Unset] / [Set]	[Unset]: The engine immobilizer is unset (engine start permitted) (ACC ON or further) [Set]: The engine immobilizer is set (engine start prohibited) (IG OFF)	When [Set] is displayed for this item, you cannot start the engine. • The security indicator light blinks when [Set] is displayed for this item. • The security indicator light is interlocked with the [Set]/[Unset] status of the immobilizer, but not with the [Lock]/[Unlock] status of the steering wheel.
[Short-circuit in the D seat exterior transmitter output circuit]	Driver's side unlock sensor output circuit status Display range: [NG(Past)] / [OK]	[NG]: The driver's side unlock sensor output circuit is abnormal. [OK]: The driver's side unlock sensor output circuit is normal.	-
[Short-circuit in the P seat exterior transmitter output circuit]	Passenger's side unlock sensor output circuit status Display range: [NG(Past)] / [OK]	[NG]: The passenger's side unlock sensor output circuit is abnormal. [OK]: The passenger's side unlock sensor output circuit is normal.	-
[Short-circuit in the D seat exterior transmitter output circuit (history)]	Driver's side unlock sensor output circuit status (history) Display range: [NG(Past)] / [OK]	[NG]: The driver's side unlock sensor output circuit was abnormal (history). [OK]: The driver's side unlock sensor output circuit was normal (history).	-

Item Name	Description/display range	Normal value	Remarks
[Short-circuit in the P seat exterior transmitter output circuit (history)]	Passenger's side unlock sensor output circuit status (history) Display range: [NG(Past)] / [OK]	[NG]: The passenger's side unlock sensor output circuit was abnormal (history). [OK]: The passenger's side unlock sensor output circuit was normal (history).	-
[Confirmed number of all registered keys]	The number of registered electrical key transmitter SUB-ASSYs is displayed. Display range: 0 to 7	0 to 7 (number of registered keys)	Up to 7 keys can be registered.
[Smart Cancel]	Smart cancel function setting status Display range: OFF/ON	[OFF]: The smart cancel function is disabled. [ON]: The smart cancel function enabled.	By default, the smart cancel setting is disabled. If the customer wishes to cancel the smart function (which locks/unlocks doors by carrying the electrical key transmitter SUB-ASSY), disable the smart function setting using the customize function. (Refer to TD - 37)

Main body

Item Name	Description/display range	Normal value	Remarks
[D Door Courtesy]	Driver's seat door courtesy light switch status Display range: [Close]/[Open]	Closed: Driver's door is closed Open: Driver's door is opened	-
[D Door Lock Pos]	Lock/unlock status of the driver's side door Display range: [Lock]/[Unlock]	[Lock]: When the driver's side door is locked [Unlock]: When the driver's side door is unlocked	-
[P Door Courtesy]	Passenger's door courtesy light switch status Display range: [Close]/[Open]	[Close]: When the passenger's side door is closed [Open]: When the passenger's side door is open	-
[P Door Lock Pos]	Lock/unlock status of the passenger's side door Display range: [Lock]/[Unlock]	[Lock]: When the passenger's side door is locked [Unlock]: When the passenger's side door is unlocked	-
[Luggage Courtesy SW]	Trunk courtesy switch status Display range: OFF/ON	[OFF]: The trunk is closed. [ON]: The trunk is open.	-
[Ignition]	Status of the IG signal Display range: OFF/ON	OFF:IG OFF ON:IG ON	-
[ACC SW]	Status of the ACC signal Display range: OFF/ON	OFF:ACC OFF ON: ACC ON or IG ON	-
[BATT voltage (control)]	The sensor power input value of the main body ECM (multiplex network body ECM) is displayed. Display range: 0 to 21.5V	11 to 14V	-
[BATT voltage (BACKUP)]	The backup power input value of the main body ECM (multiplex network body ECM) is displayed. Display range: 0 to 21.5V	11 to 14V	-
[Ignition Power Supply Voltage]	The IG power input value of the main body ECM (multiplex network body ECM) is displayed. Display range: 0 to 21.5V	11 to 14V	-
[ACC voltage]	The ACC power input value of the main body ECM (multiplex network body ECM) is displayed. Display range: 0 to 21.5V	11 to 14V	-

ABS-VSC

Item Name	Description/display range	Normal value	Remarks
[Wheel speed]	This item indicates the vehicle speed. Display range: 0.0 to 326.4 [km/h]	0.0 to 326.4 [km/h] (Approximately the same as the actual vehicle speed)	-

(6) [Active Test]

(a) Turn the ignition switch to OFF.
(b) Connect the SSM4 to the DLC3.
(c) Turn the ignition switch to ON and select [Keyless Access(Collation ECM)] →[Active Test] or [Body Control] →[Active Test] to display the [Active Test] list.
(d) Conduct an [Active Test] and determine functionality and narrow down the defective part.

Entry & Start

Item Name	Drive	Drive
[Tuner power supply ON (indoor tuner)]	Output/stop	Inspects the power supplied to the receiver.
[Driver's external transmitter]	Output/stop	Inspects the output to the driver's seat door exterior antenna
[Passenger's external transmitter]	Output/stop	Inspects the output to the passenger's seat door exterior antenna
[Power/Engine SW Light]	Output/stop	Lights up the push engine switch back light.

Main body

Item Name	Drive
[Door Lock]	ON/OFF
[Door Unlock]	ON/OFF
[Trunk and Back-Door Open]	ON/OFF
[Keyless Buzzer Output]	ON/OFF

DIAGNOSTIC TROUBLE CODE CHART

TD

DTC Code	Detection Item	DTC Output Confirmation Operation	See page
B27A1	[Driver side external antenna output stage open]	Any time*	TD - 59
B27A2	[Passenger side external antenna output stage open]	Any time*	TD - 64
B27A5	[Front internal antenna output stage open]	Any time*	TD - 68
B27A6	[Rear internal antenna output stage open]	Any time*	TD - 71
B27A7	[Trunk/rear gate internal antenna output stage open]	Any time*	TD - 75
B27A8	[Trunk/rear gate external antenna output stage open]	Any time*	TD - 79

*: Only when the vehicle is stopped

DTC	B27A1	Driver side external antenna output stage open

Circuit description

The collation ECM (smart key ECM ASSY) generates a request signal and transmits it to the front door outer handle ASSY (driver's side electrical key antenna) every 250 ms. In order for the collation ECM (smart key ECM ASSY) to detect the approach of the key towards the vehicle, a signal requesting a response from the key must be transmitted every 250 ms to an approximately 1 m (3.28 feet) wide area beside the driver's door.

The DTC B27A1 is output by the collation ECM (smart key ECM ASSY) when an open circuit is detected between the collation ECM (smart key ECM ASSY) and the front door outer handle ASSY (driver's side electrical key antenna) (that is, between terminals CLG1 and ANT1, or between terminals CG1B and ANT2).

Diagnostic codes	Detecting conditions	Faulty part	Diagnostic code output check operation
B27A1	An open circuit is detected between the collation ECM (smart key ECM ASSY) and the front door outer handle ASSY (CLG1-ANT1, CG1B-ANT2) by a failure detection circuit inside the collation ECM (smart key ECM ASSY) (1 trip detection logic*1).	• Wiring harness or connector • Front door outer handle ASSY (driver's side exterior antenna) • Collation ECM (smart key ECM ASSY)	Always*2

*1: Output only when a failure is noted.
*2: Only when the vehicle is stopped.

Vehicle status and failsafe upon failure detection

Vehicle status when a problem is detected	Failsafe operation upon failure detection
An entry lock/unlock operation does not work on the driver's door.	-

[Data monitor] / [Active Test]

DTC No.	[Data monitor] / [Active Test]
B27A1	[Keyless access system check]

Circuit figure

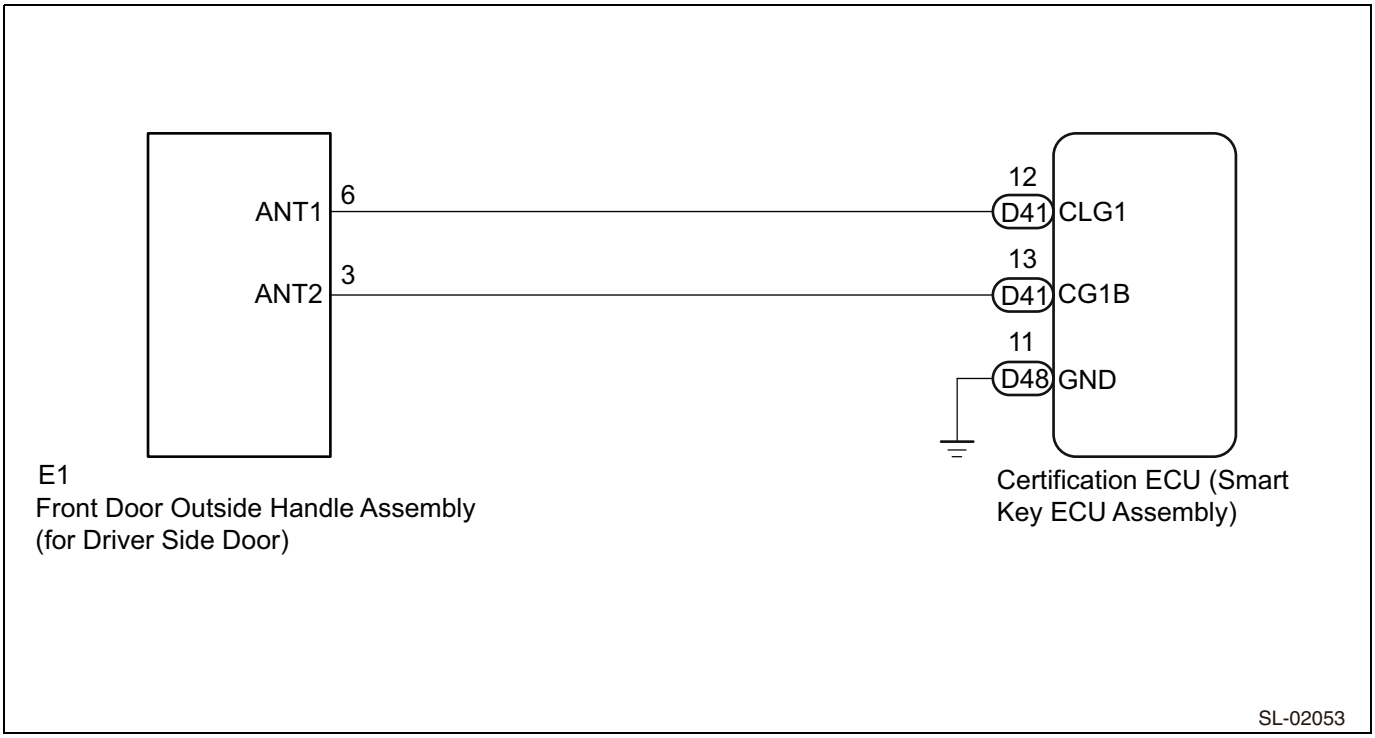

TD

Inspection steps

CAUTION:

- Some functions of the entry & start system (entry function) use the LIN communication system and the CAN communication system. Inspect the communication function by referring to "How to troubleshoot" (refer to TD - 27). Confirm that the communication system is functioning properly before proceeding to repair the entry & start system (entry function).
- Refer to "Entry & start system (entry function)" before proceeding to replace the collation ECM (smart key ECM ASSY). (Refer to TD - 5)
- After the repair work is complete, perform the "DTC output check operation" to confirm that the DTC is not output again.
- An antenna coil is present between the ANT1 and ANT2 terminals of the front door outer handle ASSY (driver's door)

1	Check if the connectors are connected.

(1) Turn the engine switch OFF.
(2) Check if the connectors are properly connected to the collation ECM (smart key ECM ASSY) and the front door outer handle ASSY.
Criteria: The connectors are properly connected.

NG → Connect the connectors properly.

OK

2	Check the harnesses and connectors (front door outer handle ASSY - collation ECM (smart key ECM ASSY)).

(1) Disconnect the D41 and D48 collation ECM (smart key ECM ASSY) connectors.
(2) Disconnect the E1 front door outer handle ASSY connector.
(3) Measure the resistance according to the following table.

Resistance

Inspection terminals	Inspection conditions	Standard value
D41-12 (CLG1) - E1-6 (ANT1)	Always	1 Ωor less
D41-13 (CG1B) - E1-3 (ANT2)	Always	1 Ωor less
D48-11 (GND) - Chassis ground	Always	1 Ωor less
D41-12 (CLG1) - chassis ground	Always	10 kΩ or more
D41-13 (CG1B) - chassis ground	Always	10 kΩ or more

NG → Repair or replace the harnesses or connectors.

OK

TD

3	Inspect the collation ECM (smart key ECM ASSY) (output to the driver's side electrical key antenna).

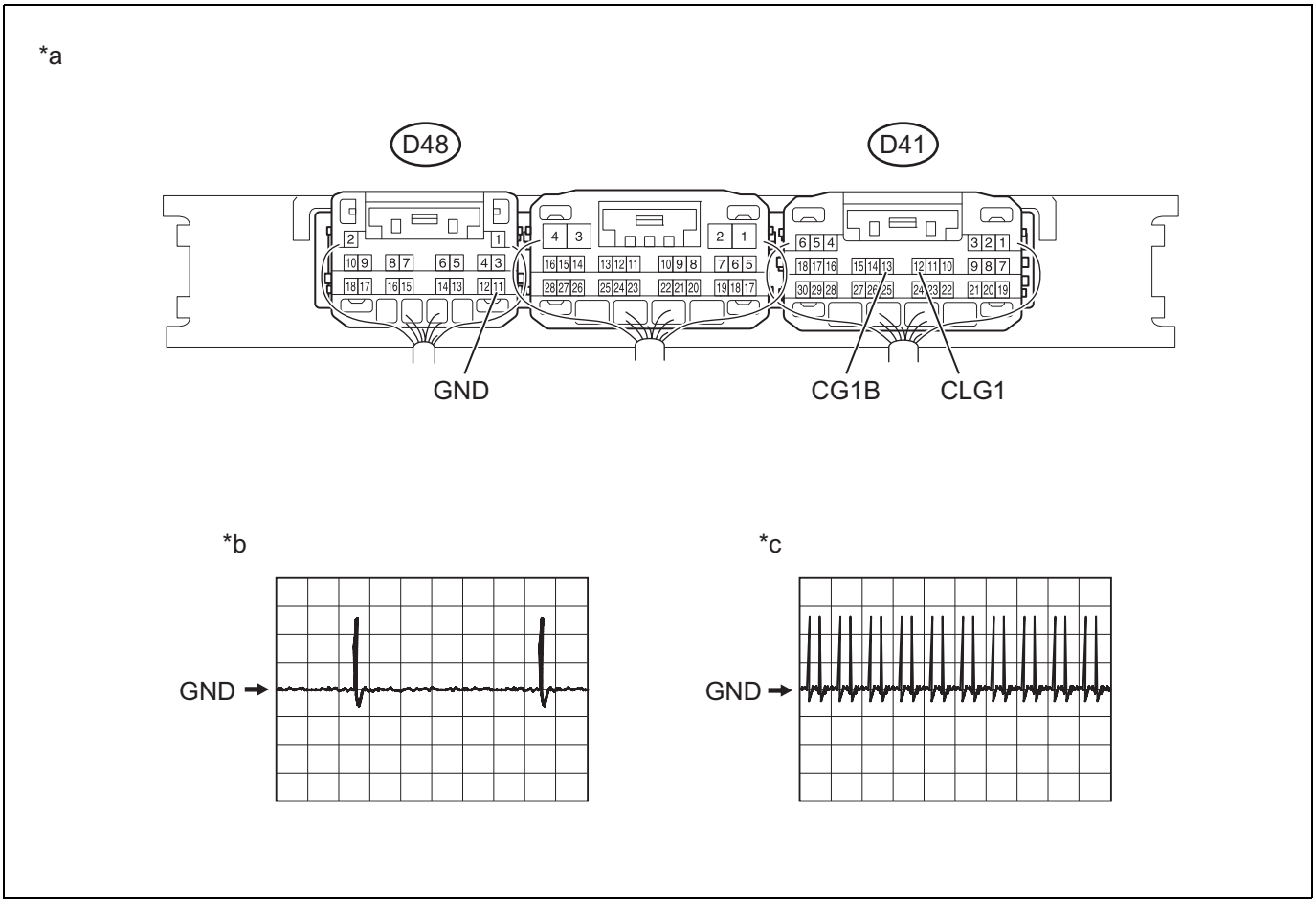

Captions in illustration

*a	Connector connected (Collation ECM (smart key ECM ASSY))	*b	Waveform 1
*c	Waveform 2	-	-

(1) Reconnect the D41 and the D48 connectors of the collation ECM (smart key ECM ASSY).
(2) Reconnect the E1 front door outer handle ASSY connector.
(3) Using an oscilloscope, check the waveform.
NOTE:
Ensure that the entry cancel function (one of the customize setting available for the entry & start system) is not enabled. (Refer to TD - 37)

Criteria

Tester connection	Switch conditions	Tool setting	Specified condition
D41-12 (CLG1) - D48-11 (GND)	Procedure: 1. The engine switch is OFF. 2. The electrical key transmitter SUB-ASSY is outside the vehicle. 3. All doors are closed. 4. The electrical key transmitter SUB-ASSY is not inside the vehicle. 5. The electrical key transmitter SUB-ASSY is inside the detection area*1. 6. All doors are locked by a wireless operation.	2 V/DIV., 500 ms/ DIV.	Pulse generation (Refer to waveform 1)
D41-12 (CLG1) - D48-11 (GND)	Procedure: 1. The engine switch is OFF. 2. The electrical key transmitter SUB-ASSY is outside the vehicle. 3. All doors are closed. 4. The electrical key transmitter SUB-ASSY is not inside the vehicle. 5. The electrical key transmitter SUB-ASSY is outside the detection area*2. 6. All doors are locked by a wireless operation.	2 V/DIV., 500 ms/ DIV.	Pulse generation (Refer to waveform 2)
D41-13 (CG1B) - D48-11 (GND)	Procedure: 1. The engine switch is OFF. 2. The electrical key transmitter SUB-ASSY is outside the vehicle. 3. All doors are closed. 4. The electrical key transmitter SUB-ASSY is not inside the vehicle. 5. All doors are locked using the electrical key transmitter SUB-ASSY.	2V/DIV., 500 ms/ DIV.	Pulse generation (Refer to waveform 2)

*1: For a detailed description about the inside of the entry function detection area, refer to "Operation check". (Refer to TD - 31)
*2: For a detailed description on outside the entry function detection area, refer to "Operation check". (Refer to TD - 31)

NG → Replacement of the collation ECM (smart key computer ASSY)

OK

4	Replace the front door outer handle ASSY (driver's door).

(1) Temporarily replace the front door outer handle ASSY with a new one or one that functions normally. (Refer to DH - 31)

Next

5	DTC check

(1) Clear the diagnostic code. (Refer to TD - 52)
(2) Recheck the diagnostic code. (Refer to TD - 52)
Criteria: B27A1 is not output.

NG → Replacement of the collation ECM (smart key computer ASSY)

OK

END (front door outer handle ASSY malfunction)

DTC	B27A2	Passenger side external antenna output stage open

Circuit description

The collation ECM (smart key ECM ASSY) generates a request signal and transmits it to the front door outer handle ASSY (passenger's side electrical key antenna) every 250 ms. In order for the collation ECM (smart key ECM ASSY) to detect the approach of the key towards the vehicle, a signal requesting a response from the key must be transmitted every 250 ms to an approximately 1 m (3.28 feet) wide area beside the passenger's door.

The DTC B27A2 is saved by the collation ECM (smart key ECM ASSY) when an open circuit is detected between the collation ECM (smart key ECM ASSY) and the front door outer handle ASSY (passenger's side electrical key antenna) (that is, between terminals CLG2 and ANT1, or between terminals CG2B and ANT2).

TD

Diagnostic codes	Detecting conditions	Faulty part	Diagnostic code output check operation
B27A2	An open circuit is detected in the circuit located between the collation ECM (smart key ECM ASSY) and the front door outer handle ASSY (CLG2-ANT1, CG2B-ANT2).	• Wiring harness or connector • Front door outer handle ASSY LH (passenger's door) • Collation ECM (smart key ECM ASSY)	Always*2

*1: Only when the vehicle is stopped.

Vehicle status and failsafe upon failure detection

Vehicle status when a problem is detected	Failsafe operation upon failure detection
An entry lock/unlock operation does not work on the passenger's door.	-

[Data monitor] / [Active Test]

DTC No.	[Data monitor] / [Active Test]
B27A2	[Keyless access system check]

Circuit figure

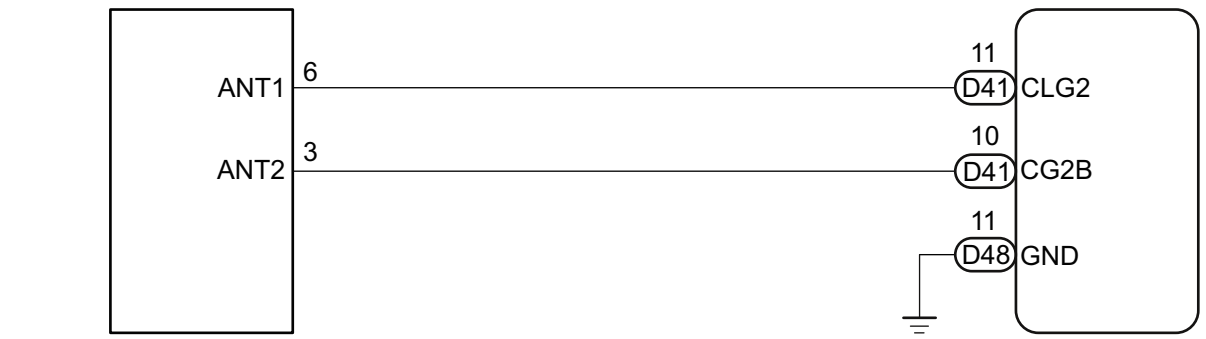

TD

Inspection steps

CAUTION:

- Some functions of the entry & start system (entry function) use the LIN communication system and the CAN communication system. Inspect the communication function by referring to "How to troubleshoot" (refer to TD - 27). Confirm that the communication system is functioning properly before proceeding to repair the entry & start system (entry function).
- Before replacing the collation ECM (smart key ECM ASSY), refer to "entry & start system (entry function)". (Refer to TD - 5)
- After the repair work is complete, perform the "DTC output check operation" to confirm that the DTC is not output again.
- An antenna coil is present between the ANT1 and ANT2 terminals of the front door outer handle ASSY (passenger's door).

1	Check if the connectors are connected.

(1) Turn the engine switch OFF.
(2) Check if the connectors are properly connected to the collation ECM (smart key ECM ASSY) and the front door outer handle ASSY.
Criteria: The connectors are properly connected.

NG → Connect the connectors properly.

OK

2	Check the harnesses and connectors (front door outer handle ASSY - collation ECM (smart key ECM ASSY)).

(1) Disconnect the D41 and D48 collation ECM (smart key ECM ASSY) connectors.
(2) Disconnect the F5 front door outer handle ASSY connector.
(3) Measure the resistance according to the following table.

Resistance

Inspection terminals	Inspection conditions	Standard value
D41-11 (CLG2) - F5-6 (ANT1)	Always	1 Ωor less

Inspection terminals	Inspection conditions	Standard value
D41-10 (CG2B) - F5-3 (ANT2)	Always	1 Ωor less
D48-11 (GND) - Chassis ground	Always	1 Ωor less
D41-11 (CLG2) - chassis ground	Always	10 kΩ or more
D41-10 (CG2B) - chassis ground	Always	10 kΩ or more

NG → Repair or replace the harnesses or connectors.

OK

3	Inspect the collation ECM (smart key ECM ASSY) (output to the passenger's side electrical key antenna).

TD

*a

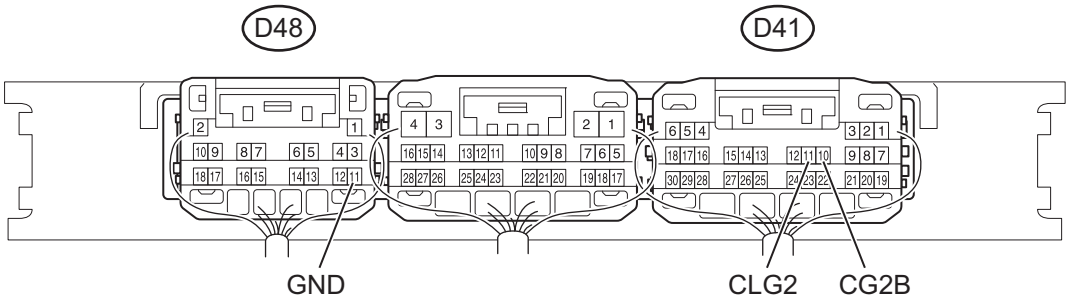

*b

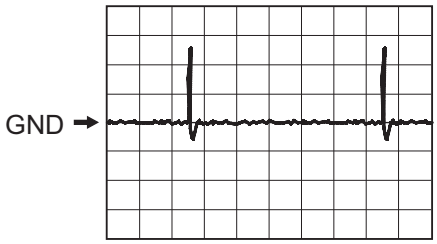

*c

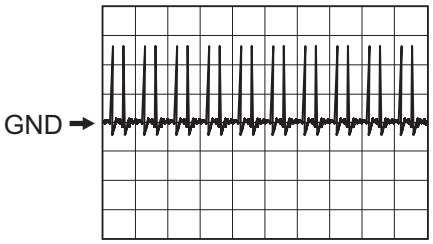

Captions in illustration

*a	Connector connected (Collation ECM (smart key ECM ASSY))	*b	Waveform 1
*c	Waveform 2	-	-

(1) Reconnect the D41 and the D48 connectors of the collation ECM (smart key ECM ASSY).
(2) Reconnect the F5 front door outer handle ASSY connector.
(3) Using an oscilloscope, check the waveform.

NOTE:
Ensure that the entry cancel function (one of the customize setting available for the entry & start system) is not enabled. (Refer to TD - 37)

Criteria

Tester connection	Switch conditions	Tool setting	Specified condition
D41-11 (CLG2) - D48-11 (GND)	Procedure: 1. The engine switch is OFF. 2. The electrical key transmitter SUB-ASSY is outside the vehicle. 3. All doors are closed. 4. The electrical key transmitter SUB-ASSY is not inside the vehicle. 5. The electrical key transmitter SUB-ASSY is inside the detection area*1. 6. All doors are locked by a wireless operation.	2 V/DIV., 500 ms/DIV.	Pulse generation (Refer to waveform 1)
D41-11 (CLG2) - D48-11 (GND)	Procedure: 1. The engine switch is OFF. 2. The electrical key transmitter SUB-ASSY is outside the vehicle. 3. All doors are closed. 4. The electrical key transmitter SUB-ASSY is not inside the vehicle. 5. The electrical key transmitter SUB-ASSY is outside the detection area*2. 6. All doors are locked by a wireless operation.	2 V/DIV., 500 ms/DIV.	Pulse generation (Refer to waveform 2)
D41-10 (CG2B) - D48-11 (GND)	Procedure: 1. The engine switch is OFF. 2. The electrical key transmitter SUB-ASSY is not outside the vehicle. 3. All doors are closed. 4. The electrical key transmitter SUB-ASSY is not inside the vehicle. 5. All doors are locked using the electrical key transmitter SUB-ASSY.	2 V/DIV., 500 ms/DIV.	Pulse generation (Refer to waveform 2)

*1: For a detailed description about the inside of the entry function detection area, refer to "Operation check". (Refer to TD - 31)
*2: For a detailed description on outside the entry function detection area, refer to "Operation check". (Refer to TD - 31)

NG → Replacement of the collation ECM (smart key computer ASSY)

OK

4	Replace the front door outer handle ASSY (passenger's door).

(1) Temporarily replace the front door outer handle ASSY with a new one or one that functions normally. (Refer to DH - 31)

Next

5	DTC check

(1) Clear the diagnostic code. (Refer to TD - 52)
(2) Recheck the diagnostic code. (Refer to TD - 52)

Criteria: The DTC B27A2 is not output.

NG → Replacement of the collation ECM (smart key computer ASSY)

OK

END (front door outer handle ASSY malfunction)

DTC	B27A5	Front internal antenna output stage open

Circuit description

The collation ECM (smart key ECM ASSY) generates a request signal and transmits it to the indoor electrical key antenna ASSY no. 1 (front floor). For the collation ECM (smart key ECM ASSY) to detect the key located inside the vehicle, the collation ECM (smart key ECM ASSY) must transmit a signal to the inside of the vehicle requesting a response from the key. The DTC B27A5 is saved by the collation ECM (smart key ECM ASSY) when an open circuit is detected between the collation ECM (smart key ECM ASSY) and the indoor electrical key antenna ASSY no. 1 (front floor) (that is, between terminals CLG5 and ANTE5, or between terminals CG5B and CLGB).

TD

Diagnostic codes	Detecting conditions	Faulty part	Diagnostic code output check operation
B27A5	An open circuit is detected in the circuit located between the collation ECM (smart key ECM ASSY) and the indoor electrical key antenna ASSY no. 1 (front floor). (CLG5-ANTE5, CG5B -CLGB) (1 trip detection logic*1).	• Wiring harness or connector • Indoor electrical key antenna ASSY no. 1 (front floor) • Collation ECM (smart key ECM ASSY)	Always*2

*1: Output only when a failure is noted.

*2: Only when the vehicle is stopped.

Vehicle status and failsafe upon failure detection

Vehicle status when a problem is detected	Failsafe operation upon failure detection
If the key is located in the front seat area: •Even if you press the engine switch, the power mode does not change. •You could end up locking doors with the key left inside the vehicle.	-

[Data monitor] / [Active Test]

DTC No.	[Data monitor] / [Active Test]
B27A5	[Keyless access system check]

Circuit figure

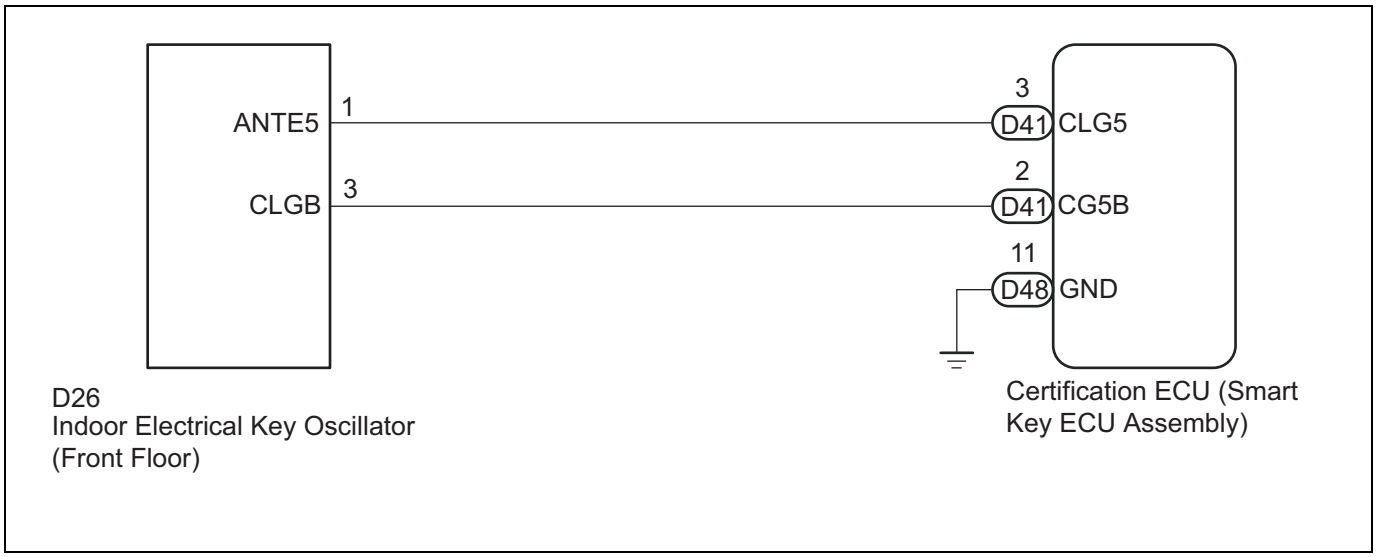

TD

Inspection steps

CAUTION:

- Some functions of the entry & start system (entry function) use the LIN communication system and the CAN communication system. Inspect the communication function by referring to "How to troubleshoot" (refer to TD - 27). Confirm that the communication system is functioning properly before proceeding to repair the entry & start system (entry function).
- Before replacing the collation ECM (smart key ECM ASSY), refer to "entry & start system (entry function)". (Refer to TD - 5)
- After the repair work is complete, perform the "DTC output check operation" to confirm that the DTC is not output again.
- An antenna coil is present between the ANTE5 and CLGB terminals of the indoor electrical key antenna ASSY no. 1 (front floor).

1	Check if the connectors are connected.

(1) Turn the engine switch OFF.

(2) Check if the connectors are properly connected to the collation ECM (smart key ECM ASSY) and the indoor electrical key antenna ASSY no. 1.

Criteria: The connectors are properly connected.

NG → Connect the connectors properly.

OK

2	Check the harnesses and connectors (collation ECM (smart key ECM ASSY) - indoor electrical key antenna no. 1 (front floor)).

(1) Disconnect the D41 and D48 collation ECM (smart key ECM ASSY) connectors.

(2) Disconnect the D26 indoor electrical key antenna ASSY no. 1 (front floor) connector.

(3) Measure the resistance according to the following table.

Resistance

Inspection terminals	Inspection conditions	Standard value
D41-3 (CLG5) - D26-1 (ANTE5)	Always	1 Ωor less
D41-2 (CG5B) - D26-3 (CLGB)	Always	1 Ωor less

Inspection terminals	Inspection conditions	Standard value
D48-11 (GND) - Chassis ground	Always	1 Ωor less
D41-3 (CLG5) - chassis ground	Always	10 kΩ or more
D41-2 (CG5B) - chassis ground	Always	10 kΩ or more

NG → Repair or replace the harnesses or connectors.

OK

3	Inspect the collation ECM (smart key ECM ASSY) (output to the indoor electrical key antenna no. 1 (front floor)).

TD

*a

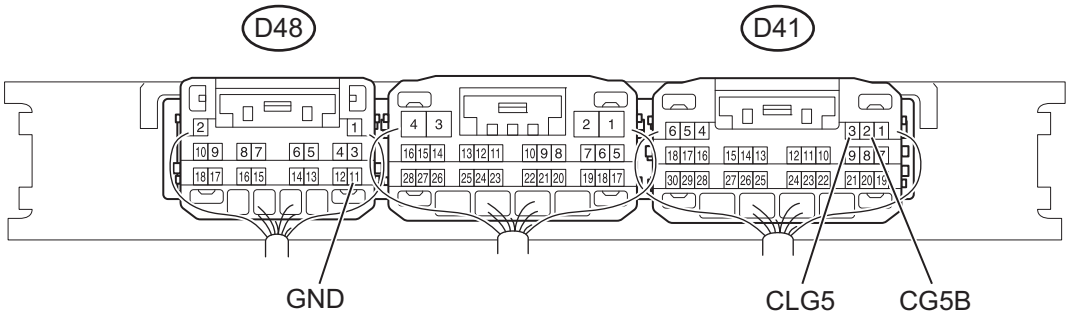

*b

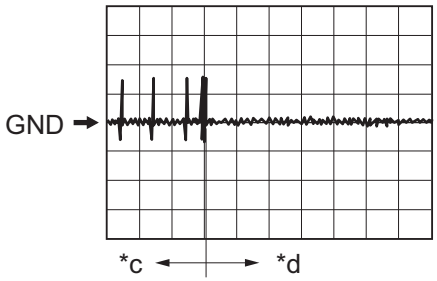

Captions in illustration

*a	Connector connected (Collation ECM (smart key ECM ASSY))	*b	Waveform
*c	Within 30 seconds of the closing of a door	*d	30 seconds after the closing of a door

(1) Reconnect the D41 and the D48 connectors of the collation ECM (smart key ECM ASSY).
(2) Reconnect the D26 indoor electrical key antenna ASSY no. 1 (front floor) connector.
(3) Using an oscilloscope, check the waveform.

NOTE:
Ensure that the entry cancel function (one of the customize setting available for the entry & start system) is not enabled. (Refer to TD - 37)

Criteria

Inspection terminals	Switch conditions	Tool setting	Specified condition
D41-3 (CLG5) - D48-11 (GND)	Procedure: 1. The engine switch is OFF. 2. A door is open. 3. A door is closed. 4. 30 seconds elapses. 5. The electrical key transmitter SUB-ASSY is not inside the vehicle.	2 V/DIV., 500 ms/ DIV.	Pulse generation (Refer to the waveform)
D41-2 (CG5B) - D48-11 (GND)	Procedure: 1. The engine switch is OFF. 2. A door is open. 3. A door is closed. 4. 30 seconds elapses. 5. The electrical key transmitter SUB-ASSY is not inside the vehicle.	2 V/DIV., 500 ms/ DIV.	Pulse generation (Refer to the waveform)

NG → Replacement of the collation ECM (smart key computer ASSY)

OK

4	Replace the indoor electrical key antenna ASSY no. 1 (front floor).

(1) Temporarily replace the indoor electrical key antenna ASSY no. 1 (front floor) with a new one or one that functions normally.

Next

5	DTC check

(1) Clear the diagnostic code. (Refer to TD - 52)
(2) Recheck the diagnostic code. (Refer to TD - 52)
Criteria: The DTC B27A5 is not output.

NG → Replacement of the collation ECM (smart key computer ASSY)

OK

END (indoor electrical key antenna ASSY no. 1 (front floor) malfunction)

DTC	B27A6	Rear internal antenna output stage open

Circuit description
The collation ECM (smart key ECM ASSY) generates a request signal and transmits it to the indoor electrical key antenna ASSY no. 2 (rear floor). For the indoor electrical key antenna ASSY no. 2 (rear floor) to detect the electrical key transmitter SUB-ASSY located inside the vehicle, the collation ECM (smart key ECM ASSY) must transmit a signal to the inside of the vehicle requesting a response from the electrical key transmitter SUB-ASSY. The DTC B27A6 is saved by the collation ECM (smart key ECM ASSY)

when an open circuit is detected between the collation ECM (smart key ECM ASSY) and the indoor electrical key antenna ASSY no. 2 (rear floor) (that is, between terminals CLG6 and ANTE6, or between terminals CG6B and CLGB).

Diagnostic codes	Detecting conditions	Faulty part	Diagnostic code output check operation
B27A6	An open circuit is detected in the circuit located between the collation ECM (smart key ECM ASSY) and the indoor electrical key antenna ASSY no. 2 (front floor). (CLG6-ANTE6, CG6B-CLGB) (1 trip detection logic*)	• Wiring harness or connector • Indoor electrical key antenna ASSY no. 2 (rear floor) • Collation ECM (smart key ECM ASSY)	Always

*: Output only when a failure is noted.

Vehicle status and failsafe upon failure detection

Vehicle status when a problem is detected	Failsafe operation upon failure detection
If the electrical key transmitter SUB-ASSY is located in the rear seat area: • Even if you press the engine switch, the power mode does not change. • The electrical key transmitter SUB-ASSY is inside the vehicle.	-

TD

[Data monitor] / [Active Test]

DTC code	[Data monitor] / [Active Test]
B27A6	[Keyless access system check]

Circuit figure

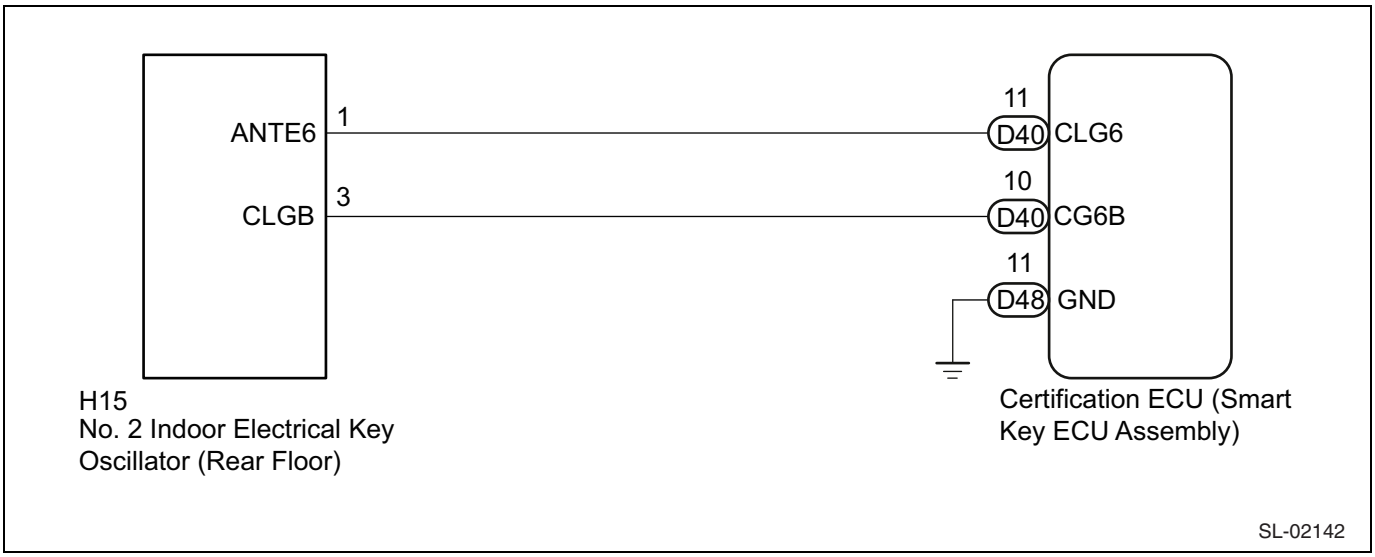

Inspection steps

CAUTION:

- Some functions of the entry & start system (entry function) use the multiplex communication system (LIN communication system) and the CAN communication system. Inspect the communication function by referring to "How to troubleshoot" (refer to TD - 27). Confirm that the communication system is functioning properly before proceeding to repair the entry & start system (entry function).
- Refer to the notes provided under "Entry & start system (entry function)" before proceeding to replace the collation ECM (smart key ECM ASSY). (Refer to TD - 5)
- After the repair work is complete, perform the "DTC output check operation" to confirm that the diagnostic code is not output again.
- An antenna coil is present between the ANTE6 and CLGB terminals of the indoor electrical key antenna ASSY no. 2 (rear floor).

1	Check if the connectors are connected.

(1) Turn the engine switch OFF.
(2) Check if the connectors are properly connected to the collation ECM (smart key ECM ASSY) and the indoor electrical key antenna ASSY no. 2 (rear floor).
Criteria: The connectors are properly connected.

NG → Connect the connectors properly.

OK

2	Check the harnesses and connectors (collation ECM - indoor electrical key antenna ASSY no. 2).

(1) Disconnect the D40 and D48 collation ECM (smart key ECM ASSY) connectors.
(2) Disconnect the H15 indoor electrical key antenna ASSY no. 2 (rear floor) connector.
(3) Measure the resistance according to the following table.

Resistance

Inspection terminals	Inspection conditions	Standard value
D40-11 (CLG6) - H15-1 (ANTE6)	Always	1 Ωor less
D40-10 (CG6B) - H15-3 (CLGB)	Always	1 Ωor less
D48-11 (GND) - Chassis ground	Always	1 Ωor less
D40-11 (CLG6) - chassis ground	Always	10 kΩ or more
D40-10 (CG6B) - chassis ground	Always	10 kΩ or more

NG → Repair or replace the harnesses or connectors.

OK

TD

3	Check the collation ECM (smart key ECM ASSY) (output to the indoor electrical key antenna ASSY no. 2).

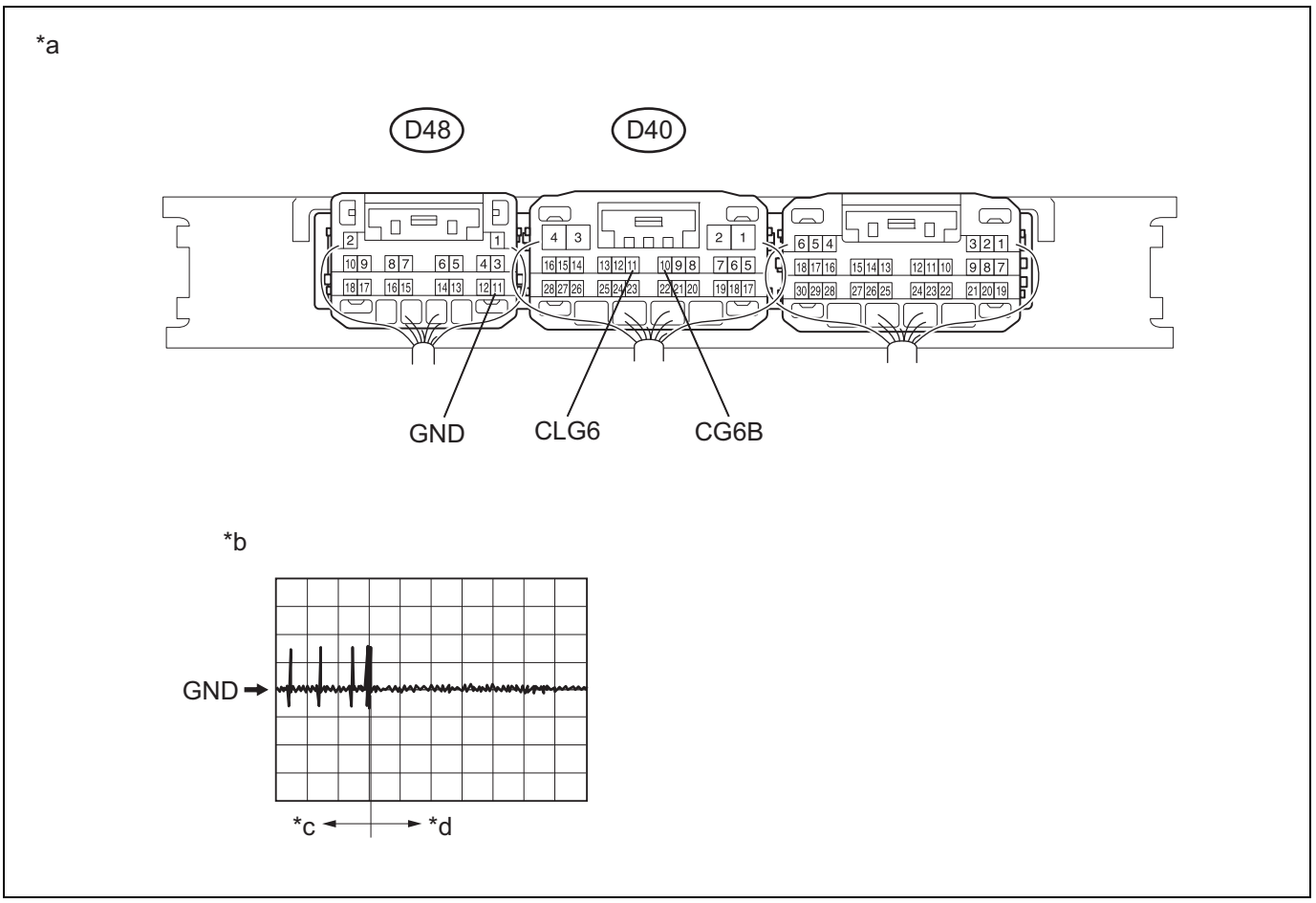

Captions in illustration

*a	Connector connected (Collation ECM (smart key ECM ASSY))	*b	Waveform
*c	Within 30 seconds of the closing of a door	*d	30 seconds after the closing of a door

(1) Reconnect the D40 and the D48 connectors of the collation ECM (smart key ECM ASSY).
(2) Reconnect the H15 indoor electrical key antenna ASSY no. 2 (rear floor) connector.
(3) Using an oscilloscope, check the waveform.

Criteria

Inspection terminals	Switch conditions	Tool setting	Specified condition
D40-11 (CLG6) - D48-11 (GND)	Procedure: 1. The engine switch is OFF. 2. The electrical key transmitter SUB-ASSY is not inside the vehicle. 3. A door is open. 4. A door is closed. 5. Within 30 seconds	2 V/DIV., 500 ms/DIV.	Pulse generation (Refer to the waveform)

Inspection terminals	Switch conditions	Tool setting	Specified condition
D40-10 (CG6B) - D48-11 (GND)	Procedure: 1. The engine switch is OFF. 2. The electrical key transmitter SUB-ASSY is not inside the vehicle. 3. A door is open. 4. A door is closed. 5. Within 30 seconds	2 V/DIV., 500 ms/DIV.	Pulse generation (Refer to the waveform)

NG → Replacement of the collation ECM (smart key computer ASSY)

OK

4	Replace the indoor electrical key antenna ASSY no. 2 (rear floor).

(1) Temporarily replace the indoor electrical key antenna ASSY no. 2 (rear floor) with a new one or one that functions normally. (Refer to TD - 334)

Next

5	DTC check

(1) Clear the diagnostic code. (Refer to TD - 52)
(2) Check for DTC. (Refer to TD - 52)
Criteria: The DTC B27A6 is not output.

NG → Replacement of the collation ECM (smart key computer ASSY)

OK

END (indoor electrical key antenna ASSY no. 2 (rear floor) malfunction).

DTC	B27A7	Trunk/rear gate internal antenna output stage open

Circuit description

The collation ECM (smart key ECM ASSY) generates a request signal and transmits it to the indoor electrical key antenna ASSY no. 3 (trunk interior antenna). For the collation ECM (smart key ECM ASSY) to detect the key located inside the trunk, the collation ECM (smart key ECM ASSY) must transmit a signal requesting a response from the key to the inside of the trunk. The DTC B27A7 is saved by the collation ECM (smart key ECM ASSY) when an open circuit is detected between the collation ECM (smart key ECM ASSY) and the indoor electrical key antenna ASSY no. 3 (trunk interior antenna) (that is, between terminals CLG7 and CLG7, or between terminals CG7B and CLGB).

Diagnostic codes	Detecting conditions	Faulty part	Diagnostic code output check operation
B27A7	An open circuit is detected in the circuit located between the collation ECM (smart key ECM ASSY) and the indoor electrical key antenna ASSY no. 3 (trunk interior antenna). (CLG7-ANTE7, CG7B -CLGB) (1 trip detection logic*1).	• Wiring harness or connector • Indoor electrical key antenna ASSY No. 3 (trunk) • Collation ECM (smart key ECM ASSY)	Always*2

*1: Output only when a failure is noted.

*2: Only when the vehicle is stopped.

Vehicle status and failsafe upon failure detection

Vehicle status when a problem is detected	Failsafe operation upon failure detection
If the key is located in the trunk: • Even if you press the engine switch, the power mode does not change. • You could end up locking doors with the key left inside the vehicle.	-

TD

[Data monitor] / [Active Test]

DTC No.	[Data monitor] / [Active Test]
B27A7	[Keyless access system check]

Circuit figure

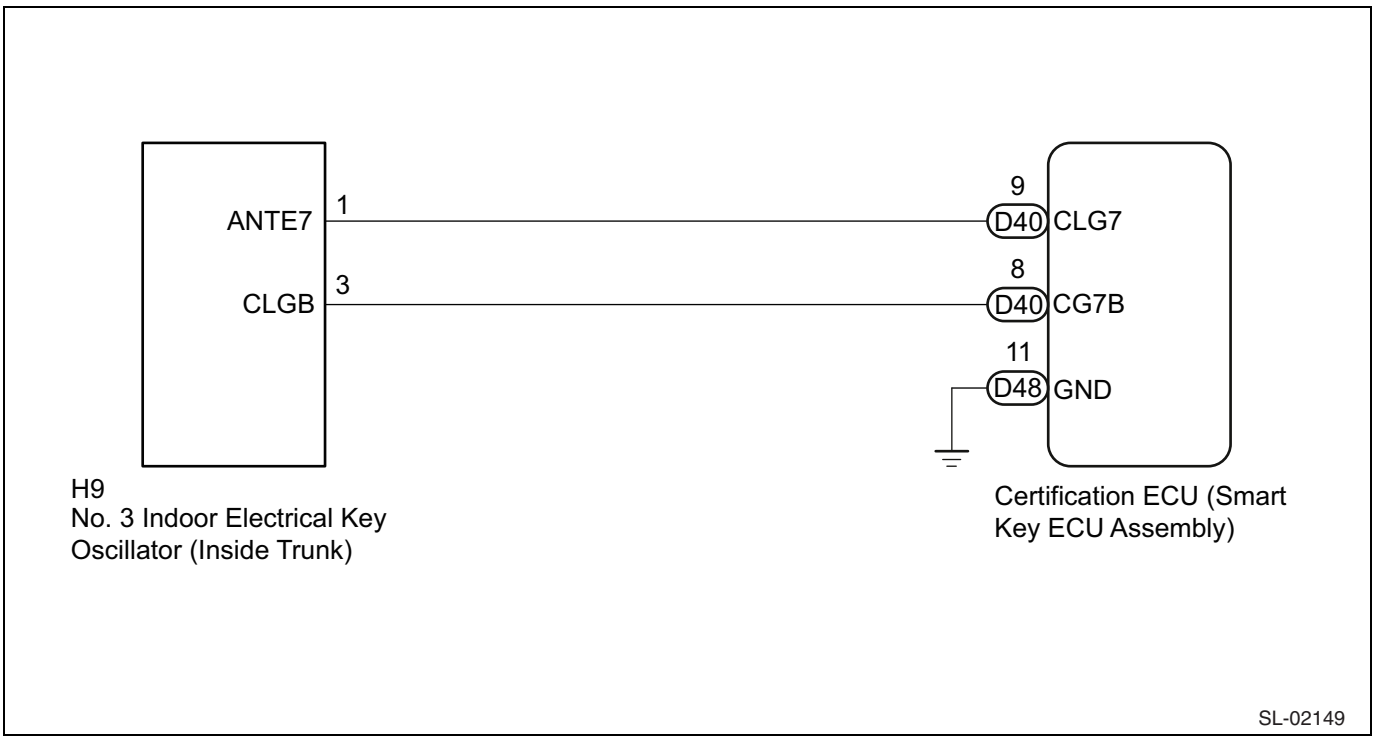

Inspection steps

CAUTION:

- Some functions of the entry & start system (entry function) use the LIN communication system and the CAN communication system. Inspect the communication function by referring to "How to troubleshoot" (refer to TD - 27). Confirm that the communication system is functioning properly before proceeding to repair the entry & start system (entry function).
- Before replacing the collation ECM (smart key ECM ASSY), refer to "entry & start system (entry function)". (Refer to TD - 5)
- After the repair work is complete, perform the "DTC output check operation" to confirm that the DTC is not output again.

- An antenna coil is present between the ANTE7 and CLGB terminals of the indoor electrical key antenna ASSY no. 3 (trunk interior antenna).

1	Check if the connectors are connected.

(1) Turn the engine switch OFF.
(2) Check if the connectors are properly connected to the collation ECM (smart key ECM ASSY) and the indoor electrical key antenna ASSY no. 3 (trunk interior antenna).
Criteria: The connectors are properly connected.

NG → Connect the connectors properly.

OK

2	Check the harnesses and connectors (collation ECM (smart key ECM ASSY) - indoor electrical key antenna ASSY no. 3).

(1) Disconnect the D40 and D48 collation ECM (smart key ECM ASSY) connectors.
(2) Disconnect the H9 indoor electrical key antenna ASSY no. 3 (trunk interior antenna) connector.
(3) Measure the resistance according to the following table.

Resistance

Inspection terminals	Inspection conditions	Standard value
D40-9 (CLG7) - H9-1 (ANTE7)	Always	1 Ωor less
D40-8 (CG7B) - H9-3 (CLGB)	Always	1 Ωor less
D48-11 (GND) - Chassis ground	Always	1 Ωor less
D40-9 (CLG7) - chassis ground	Always	10 kΩ or more
D40-8 (CG7B) - chassis ground	Always	10 kΩ or more

NG → Repair or replace the harnesses or connectors.

OK

3	Inspect the collation ECM (smart key ECM ASSY) (output to the indoor electrical key antenna ASSY no. 3 (luggage interior antenna)).

*a

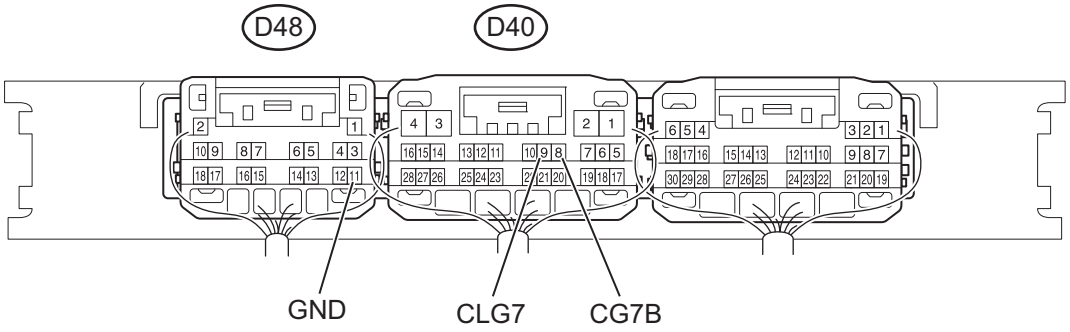

*b

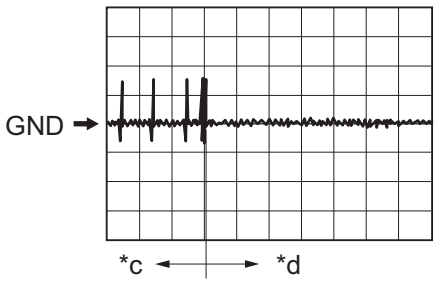

Captions in illustration

*a	Connector connected (Collation ECM (smart key ECM ASSY))	*b	Waveform
*c	Within 30 seconds of the closing of a door	d	30 seconds after the closing of a door

(1) Reconnect the D40 and the D48 connectors of the collation ECM (smart key ECM ASSY).
(2) Reconnect the H9 indoor electrical key antenna ASSY no. 3 (trunk interior antenna) connector.
(3) Using an oscilloscope, check the waveform.
NOTE:
Check the customize setting available for the entry & start system as well as the "ignition available area". (Refer to TD - 37)

Criteria

Inspection terminals	Switch conditions	Tool setting	Specified condition
D40-9 (CLG7) - D48-11 (GND)	Procedure: 1. The engine switch is OFF. 2. A door is open. 3. A door is closed. 4. 30 seconds elapses. 5. The electrical key transmitter SUB-ASSY is not inside the vehicle.	2 V/DIV., 500 ms/DIV.	Pulse generation (Refer to the waveform)

Inspection terminals	Switch conditions	Tool setting	Specified condition
D40-8 (CG7B) - D48-11 (GND)	Procedure: 1. The engine switch is OFF. 2. A door is open. 3. A door is closed. 4. 30 seconds elapses. 5. The electrical key transmitter SUB-ASSY is not inside the vehicle.	2 V/DIV., 500 ms/DIV.	Pulse generation (Refer to the waveform)

NG → Replacement of the collation ECM (smart key computer ASSY)

OK

4	Replacement of the indoor electrical key antenna ASSY no. 3 (trunk interior antenna)

(1) Temporarily replace the indoor electrical key antenna ASSY no. 3 (trunk interior antenna) with a new one or one that functions normally. (Refer to TD - 335)

Next

5	Do a DTC check again.

(1) Clear the diagnostic code. (Refer to TD - 52)
(2) Recheck the diagnostic code. (Refer to TD - 52)
Criteria: B27A7 is not output.

NG → Replacement of the collation ECM (smart key computer ASSY)

OK

END (indoor electrical key antenna ASSY no. 3 (trunk interior antenna) malfunction)

DTC	B27A8	Trunk/rear gate external antenna output stage open

Circuit description
The collation ECM (smart key ECM ASSY) generates a request signal and transmits it to the electrical key antenna ASSY (trunk exterior antenna). In order for the collation ECM (smart key ECM ASSY) to detect the approach of the electrical key transmitter SUB-ASSY towards the vehicle, the request signal received must be transmitted to an approximately 1.0 m (3.28 feet) wide area beside the trunk. The DTC B27A8 is saved by the collation ECM (smart key ECM ASSY) when an open circuit is detected between the collation ECM (smart key ECM ASSY) and the electrical key antenna (trunk exterior antenna) (that is, between terminals CLG8 and ANT1, or between terminals CG8B and ANT2).

Diagnostic codes	Detecting conditions	Faulty part	Diagnostic code output check operation
B27A8	An open circuit is detected in the circuit located between the collation ECM (smart key ECM ASSY) and electrical key antenna ASSY (trunk exterior antenna). (CLG8 - ANTE8, CG8B -ANT2) (1 trip detection logic*1).	• Wiring harness or connector • Electrical key antenna (trunk exterior) • Collation ECM (smart key ECM ASSY)	Always*2

*1: Output only when a failure is noted.

*2: Only when the vehicle is stopped.

Vehicle status and failsafe upon failure detection

Vehicle status when a problem is detected	Failsafe operation upon failure detection
An entry lock/unlock operation does not work on the trunk.	-

[Data monitor] / [Active Test]

DTC No.	[Data monitor] / [Active Test]
B27A8	[Keyless access system check]

TD

Circuit figure

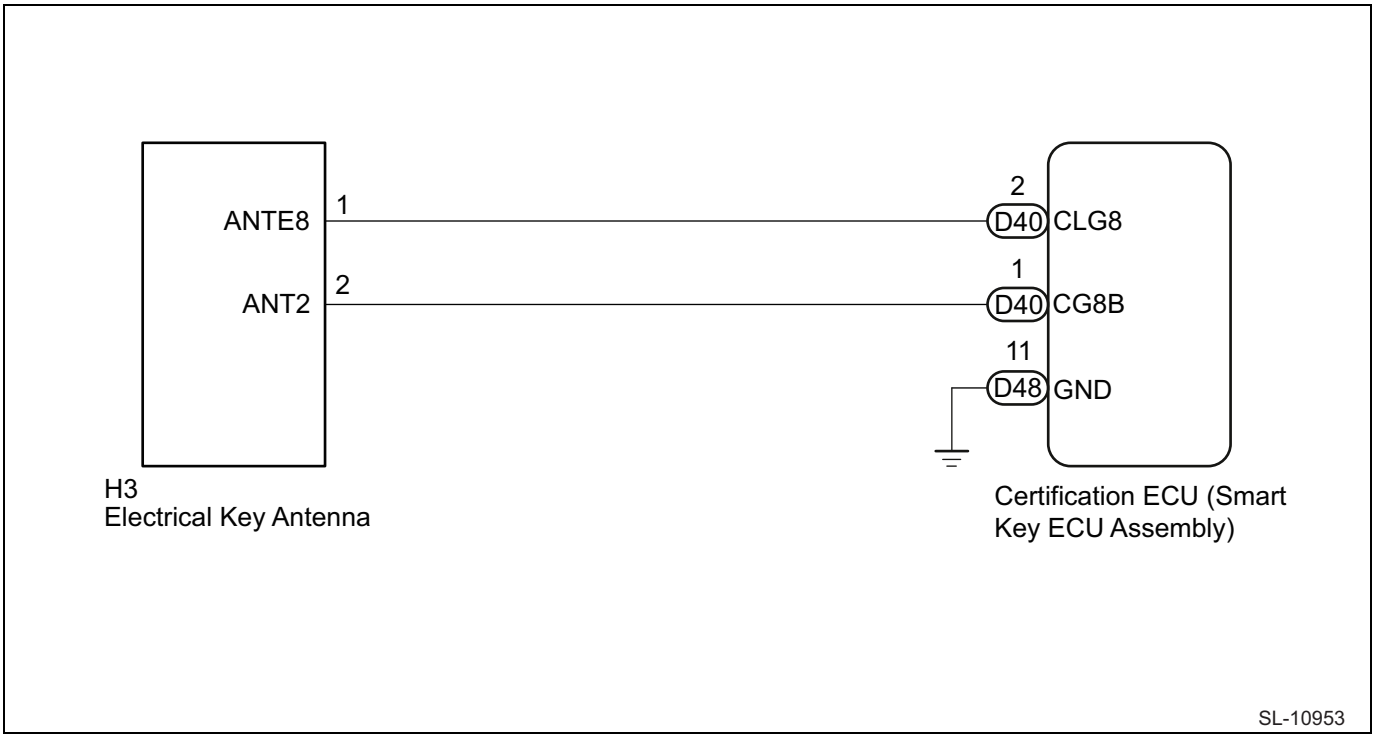

Inspection steps

CAUTION:

- Some functions of the entry & start system (entry function) use the LIN communication system and the CAN communication system. Inspect the communication function by referring to "How to troubleshoot" (refer to TD - 27). Confirm that the communication system is functioning properly before proceeding to repair the entry & start system (entry function).
- Before replacing the collation ECM (smart key ECM ASSY), refer to "entry & start system (entry function)". (Refer to TD - 5)
- After the repair work is complete, perform the "DTC output check operation" to confirm that the DTC is not output again.
- An antenna coil is present between the ANTE8 and ANT2 terminals of the electrical key antenna ASSY (trunk exterior antenna).

1	Check if the connectors are connected.

(1) Turn the engine switch OFF.

(2) Check if the connectors are properly connected to the collation ECM (smart key ECM ASSY) and the electrical key antenna (trunk exterior antenna).

Criteria: The connectors are properly connected.

NG → Connect the connectors properly.

OK

2	Check the harnesses and connectors (collation ECM (smart key ECM ASSY) - electrical key antenna (trunk exterior antenna)).

(1) Disconnect the D40 and D48 collation ECM (smart key ECM ASSY) connectors.

(2) Disconnect the H3 electrical key antenna (trunk exterior antenna) connector.

(3) Measure the resistance according to the following table.

Resistance

Inspection terminals	Inspection conditions	Standard value
D40-2 (CLG8) - H3-1 (ANTE8)	Always	1 Ωor less
D40-1 (CG8B) - H3-2 (ANT2)	Always	1 Ωor less
D48-11 (GND) - Chassis ground	Always	1 Ωor less
D40-2 (CLG8) - chassis ground	Always	10 kΩ or more
D40-1 (CG8B) - chassis ground	Always	10 kΩ or more

NG → Repair or replace the harnesses or connectors.

OK

3	Inspect the electrical key antenna (trunk exterior antenna) unit.

(1) Remove the electrical key antenna (trunk exterior antenna). (Refer to TD - 336)

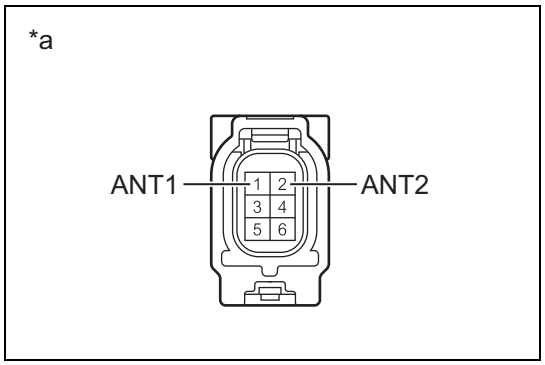

(2) Measure the resistance according to the following table.

Resistance

Inspection terminals	Inspection conditions	Standard value
1 (ANTE8) - 2 (ANT2)	Always	1 Ωor less

Captions in illustration

*a	Connector not connected (Electrical key antenna (trunk exterior antenna))

NG → Replace the electrical key antenna (trunk exterior antenna).

OK

4	Replacement of the collation ECM (smart key computer ASSY)

(1) Temporarily replace the collation ECM (smart key ECM ASSY) with a new one or one that functions normally.

Next

5	DTC check

(1) Clear the diagnostic code. (Refer to TD - 52)
(2) Recheck the diagnostic code. (Refer to TD - 52)
Criteria: B27A8 is not output again.

NG → Replace the electrical key antenna (trunk exterior antenna).

OK

END (collation ECM (smart key ECM ASSY) malfunction)

The exterior alarm and answer-back buzzer of the smart entry system do not go off

Circuit description

The entry & start system uses the wireless door lock buzzer to provide various exterior warnings. When the specific conditions for each waning are met, the collation ECM (smart key ECM ASSY) transmits a buzzer signal to the main body ECM via the CAN communication. The main body ECM then transmits the signal to the wireless door lock buzzer to sound the buzzer.

Circuit figure

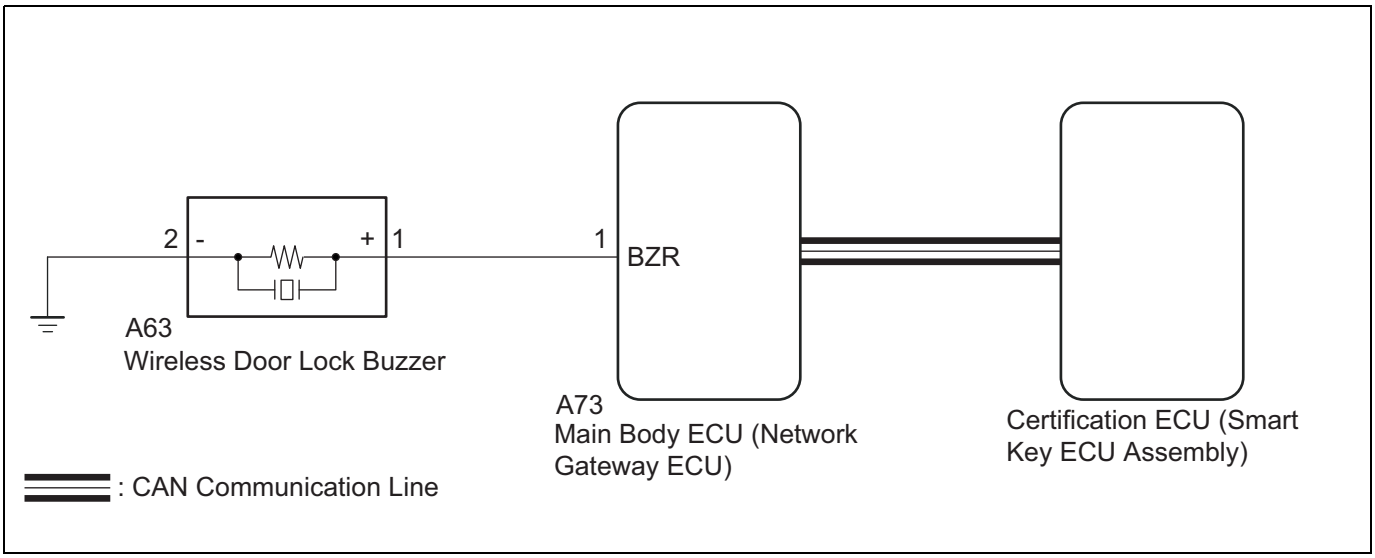

Inspection steps

CAUTION:

- Some functions of the entry & start system (entry function) use the LIN communication system and the CAN communication system. Inspect the communication function by referring to "How to troubleshoot" (refer to TD - 27). Confirm that the communication system is functioning properly before proceeding to repair the entry & start system (entry function).
- Before replacing the collation ECM (smart key ECM ASSY), refer to "entry & start system (entry function)". (Refer to TD - 5)

1	Using SSM4, perform an [Active Test] (wireless buzzer).

(1) Connect the SSM4 to the DLC3.
(2) Turn the ignition switch to ON.
(3) Turn on the SSM4.
(4) Enter the following menus: [Body Control] →[Active Test]
(5) Based on the SSM4 display contents, perform an [Active Test].

Main body

Tester display	Tested parts	Control range	Notes for diagnosis
[Keyless Buzzer Output]	Wireless door lock buzzer	OFF/ON	-

Criteria: The wireless door lock buzzer beeps.

NG → Go to Step 2.

OK

Replacement of the collation ECM (smart key computer ASSY)

2	Inspect the wireless door lock buzzer unit.

(1) Remove the wireless door lock buzzer. (Refer to DL - 114)
(2) Inspect the wireless door lock buzzer unit.

NG → Replace the wireless door lock buzzer.

OK

3	Check the harnesses and connectors (main body ECM - wireless door lock buzzer and chassis ground).

(1) Disconnect the A63 wireless door lock buzzer connector.
(2) Disconnect the A73 main body ECM (multiplex network body ECM) connector.
(3) Measure the resistance according to the following table.
Resistance

Inspection terminals	Inspection conditions	Standard value
A63-1 - A73-1	Always	1 Ωor less
A63-2 - Chassis ground	Always	1 Ωor less
A63-1 - Chassis ground	Always	10 kΩ or more

NG → Repair or replace the harnesses or connectors.

OK

Replace the main body ECM (multiplex network body ECM).

Neither smart lock nor smart unlock operation works on any of the doors (wireless function does not work either)

Circuit description

If neither the entry door lock/unlock function nor the wireless door lock/unlock function works, it might be due to interference from external radio waves, or due to a defect in the key or a signal circuit located between the door control receiver and the collation ECM (smart key ECM ASSY). The signal circuit is shared by the entry function and the wireless door lock function.

Circuit figure

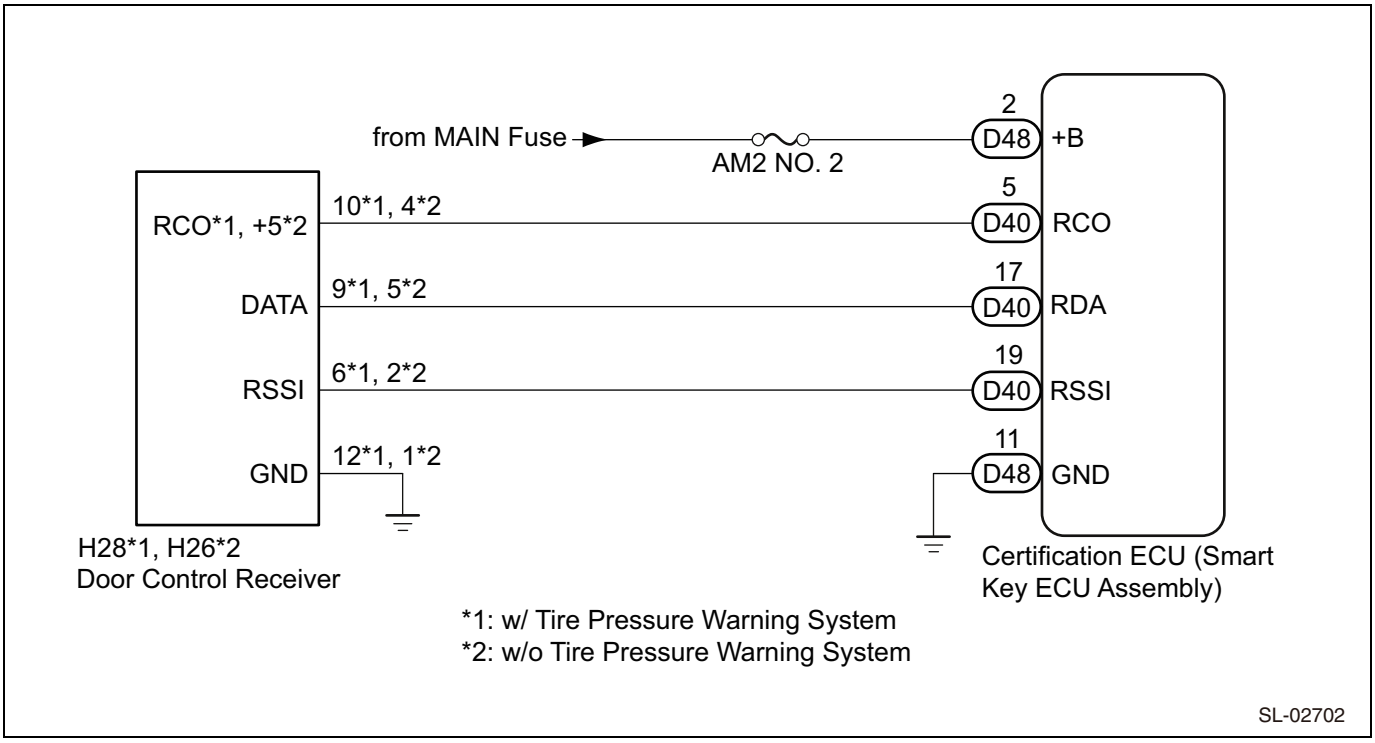

TD

Inspection steps

CAUTION:

- Some functions of the entry & start system (entry function) use the LIN communication system and the CAN communication system. Inspect the communication function by referring to "How to troubleshoot" (refer to TD - 27). Confirm that the communication system is functioning properly before proceeding to repair the entry & start system (entry function).
- Before replacing the collation ECM (smart key ECM ASSY), refer to "entry & start system (entry function)". (Refer to TD - 5)
- Check if the electrical key transmitter SUB-ASSY is inside the vehicle.
- Before proceeding with the inspection procedure, check that the DTC B1242 (wireless door lock control) is not output. (Refer to TD - 52)
- Before performing the following inspection steps, check the fuses related to this system.
- Even if you want to check the entry lock operation several times, the setting does not allow you to perform the lock operation more than twice in a row. To perform the entry lock operation more than twice, you have to unlock a door once (you may use any type of unlock operation). This limitation applies only to the entry lock operation. A wireless lock or other types of lock operations can be performed any number of times without any limitations.
- After the repair work is complete, perform the "DTC output check operation" to confirm that the DTC is not output again.
- The door control receiver is supplied 5 volts of power from the collation ECM.

1	Check the battery voltage.

(1) Measure the voltage of the vehicle battery.

Standard voltage: 11 to 14V

NOTE:
You can check if the vehicle battery is discharged by operating the horn. If the voltage is 11V or less, charge or replace the vehicle battery before performing the operation.

Next

2	DTC check

(1) Using the mechanical key integrated into the electrical key transmitter SUB-ASSY, open the driver's door.
(2) Connect the SSM4 and check the DTC. (Refer to TD - 52)
Criteria: No DTC is output

NG → Go to "List of diagnostic codes" (refer to TD - 59).

OK

3	Check the power door lock control system.

(1) Operate the door control switch on the driver's side power window regulator master switch ASSY, and check if the door locks or unlocks properly according to the switch operation you have performed.
Criteria: The door lock operation is performed properly.

NG → Go to "Power door lock control system".

OK

4	Check the electrical key transmitter SUB-ASSY.

(1) Check if an electrical key transmitter SUB-ASSY registered to another vehicle is present.

Result

Result	Go to
An electrical key transmitter SUB-ASSY registered to another vehicle is not present.	A
An electrical key transmitter SUB-ASSY registered to another vehicle is present.	B

B → Go to Step 6.

A

5	Register a new electrical key transmitter SUB-ASSY.

(1) Register a new electrical key transmitter SUB-ASSY. (Refer to the "Registration manual for immobilizer")

Next

6	Check the entry door lock operation.

(1) Using another electrical key transmitter SUB-ASSY registered to the vehicle, check if an entry lock/unlock operation can be performed 2 or more times in a row.
Criteria: The entry lock/unlock operation can be performed properly.

NG → Go to Step 9.

OK

7	Check the transmitter battery.

(1) Check the transmitter battery level of the first electrical key transmitter SUB-ASSY checked.
(a) Hold down the lock switch on the transmitter for 5 seconds and check how many times the LED on the transmitter blinks.

TD

Result

Result	Go to
The LED on the transmitter does not light up while the switch is held down.	A
The LED on the transmitter blinks 3 times while the switch is held down.	B
The LED on the transmitter blinks twice but not for the third time.	C

NOTE:
- While in use, the electrical key transmitter SUB-ASSY transmits voltage information to the collation ECM (smart key ECM ASSY). If the voltage is 2.4 V or less, the collation ECM (smart key ECM ASSY) displays [Yes] for [Key Low Battery] (an item under [Data monitor]). (Refer to TD - 53)
- To start the engine when the transmitter battery is drained, depress the brake pedal, hold down the engine switch, and place the electrical key transmitter SUB-ASSY over the engine switch.

B → Replacement of the electrical key transmitter SUB-ASSY

C → Replace the transmitter battery.

A

8	Inspect the transmitter battery unit (voltage).

(1) Remove the transmitter battery from the faulty electrical key transmitter SUB-ASSY. (Refer to DL - 92)
(2) Using tape or the like, attach the lead wire (0.60 mm or less in diameter, including the wire sheath) to the negative terminal.
CAUTION:
Do not twist the lead wire around the terminal, tuck it into the terminal, or solder it to the terminal. If the terminal is deformed or damaged, the transmitter battery cannot be properly installed.
(3) Carefully pull the lead wire, and insert the previously removed transmitter battery.

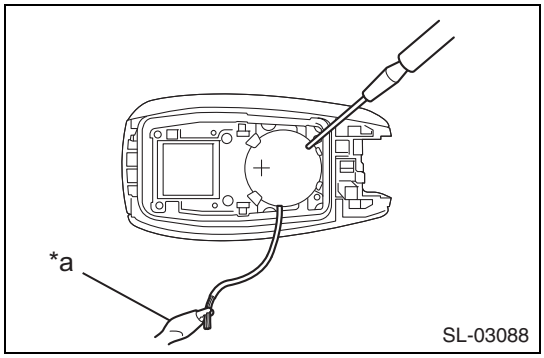

(4) Measure the voltage of the transmitter battery.

Captions in illustration

*a	GND

NOTE:

- Measure the transmitter battery voltage by bringing the electrical key transmitter SUB-ASSY inside the lock entry operating range while operating the lock sensor on the door handle.
- Perform this measurement when the key is at the room temperature.
- During signal transmission, the key transmits voltage information to the collation ECM (smart key ECM ASSY). If the voltage is 2.4 V or less, [Yes] is displayed for [Key Low Battery] (an item under [Data monitor]). (Refer to TD - 53)

Voltage

Inspection terminals	Switch conditions	Specified condition
Transmitter battery positive terminal (+) - transmitter battery negative terminal (-)	Change the power mode to IG OFF, close all doors, and touch the lock sensor.	2.5 - 3.2V

NG → Replace the transmitter battery.

OK

Replacement of the electrical key transmitter SUB-ASSY

9	Checking the waveform environment

(1) Move the electrical key transmitter SUB-ASSY towards the door control receiver and check that the wireless and entry functions work properly.

NOTE:

- Try moving the electrical key transmitter SUB-ASSY closer to the door control receiver, so that it is less likely to be affected by interference from external radio waves. In this way, you can identify if the problem is caused by external radio waves or not.
- If this inspection reveals that the problem occurs in certain locations or during certain periods of time, the problem is likely due to interference from external radio waves. In addition, installing an additional component to the vehicle makes the vehicle more susceptible to interference from external radio waves. If such components are found, remove them, and then proceed to check the operation.
- Being close to a broadcast antenna, a large video display, a wireless garage door opener system, a wireless security camera, or a home security system makes the vehicle susceptible to interference from external radio waves. If this is the case, move the vehicle to another location to check if the problem improves.
- If a tool for checking radio waves such as a signal-strength meter is available, take measurements in the LF band (which is used by the vehicle antenna to create a detection area) and the RF band (which

is used by the electrical key transmitter SUB-ASSY for signal transmission) in the vicinity of the vehicle to check where the radio waves might be present.

Criteria: Both the wireless and entry functions work properly.

NG → Go to Step 10.

OK

Interference from external radio waves

10	Read numerical values using the SSM4 [ACC SW], [Ignition].

(1) Connect the SSM4 to the DLC3.
(2) Turn the ignition switch to ON.
(3) Turn on the SSM4.
(4) Enter the following menus: [Body Control] →[Active Test]
(5) Based on the SSM4 display contents, read the [Active Test].

TD

Main body

Tester display	Measurement items / range	Normal condition	Notes for diagnosis
[ACC SW]	The engine switch is ON (ACC)/OFF or ON.	OFF: The engine switch is OFF. ON: The engine switch is on (ACC).	-
[Ignition]	The engine switch is ON (IG)/ [OFF] or [ON]	OFF: The engine switch is OFF. ON: Engine switch is ON (IG)	-

NG → Refer to the troubleshooting procedure for the main body ECM (refer to TD - 27).

OK

11	Check the harnesses and connectors (collation ECM (smart key ECM ASSY) - battery and chassis ground).

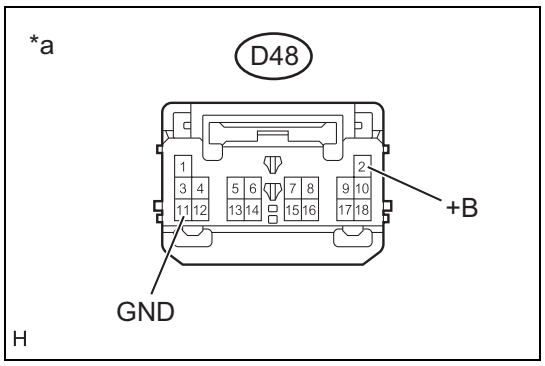

(1) Disconnect the D48 collation ECM (smart key ECM ASSY) connector.
(2) Measure the resistance according to the following table.
Resistance

Inspection terminals	Inspection conditions	Standard value
D48-11 (GND) - Chassis ground	Always	1 Ωor less

(3) Measure the voltage according to the following table.
Voltage

Inspection terminals	Inspection conditions	Standard value
D48-2 (+B) - chassis ground	Always	11 - 14 V

Captions in illustration

*a	Front side of vehicle wiring harness connector (See "collation ECM (smart key ECM ASSY)")

(4) Reconnect the D48 connector of the collation ECM (smart key ECM ASSY).

NG → Repair or replace the harnesses or connectors.

OK

12	Check the harnesses and connectors (collation ECM - door control receiver).

(1) Disconnect the D40 collation ECM (smart key ECM ASSY) connector.
(2) Disconnect the H28*1 or H26*2 door control receiver connector.
(3) Measure the resistance according to the following table.
*1: With TPMS
*2: Without TPMS
Resistance

Inspection terminals	Inspection conditions	Standard value
D40-5 (RCO) - H28-10 (RCO)*1 D40-5 (RCO) - H26-4 (+5)*2	Always	1 Ωor less
D40-17 (RDA) - H28-9 (DATA)*1 D40-17 (RDA) - H26-5 (DATA)*2	Always	1 Ωor less
D40-19 (RSSI) - H28-6 (RSSI)*1 D40-19 (RSSI) - H26-2 (RSSI)*2	Always	1 Ωor less
D40-5 (RCO) - chassis ground	Always	10 kΩ or more
D40-17 (RDA) - chassis ground	Always	10 kΩ or more
D40-19 (RSSI) - chassis ground	Always	10 kΩ or more

*1: With TPMS
*2: Without TPMS

NG → Repair or replace the harnesses or connectors.

OK

TD

13	Inspect the door control receiver unit.

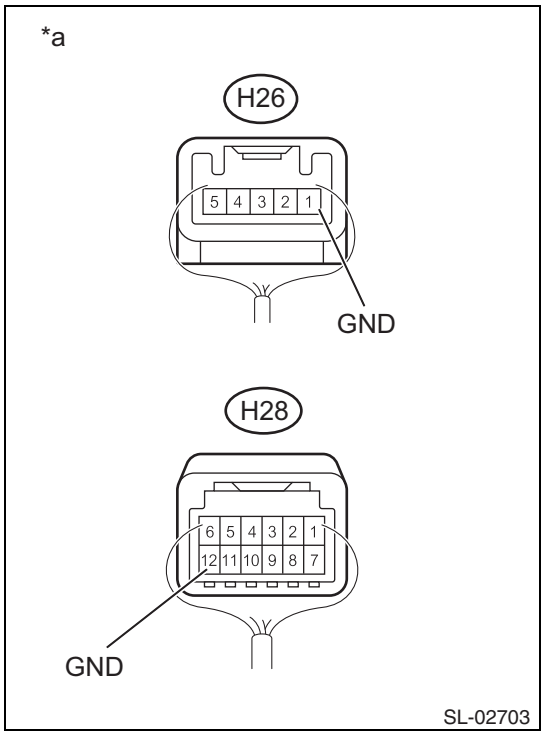

(1) Reconnect the H28*1 or H26*2 door control receiver connector.
(2) Measure the resistance according to the following table.
Resistance

Inspection terminals	Inspection conditions	Standard value
H28-12 (GND) - chassis ground*1 H26-1 (GND) - chassis ground*2	Always	1 Ωor less

*1: With TPMS
*2: Without TPMS

Captions in illustration

*a	Connector connected (Door control receiver)

(3) Reconnect the D48 connector of the collation ECM (smart key ECM ASSY).

NG → Replace the door control receiver.

OK

14	Unit inspection of the collation ECM (smart key ECM ASSY)

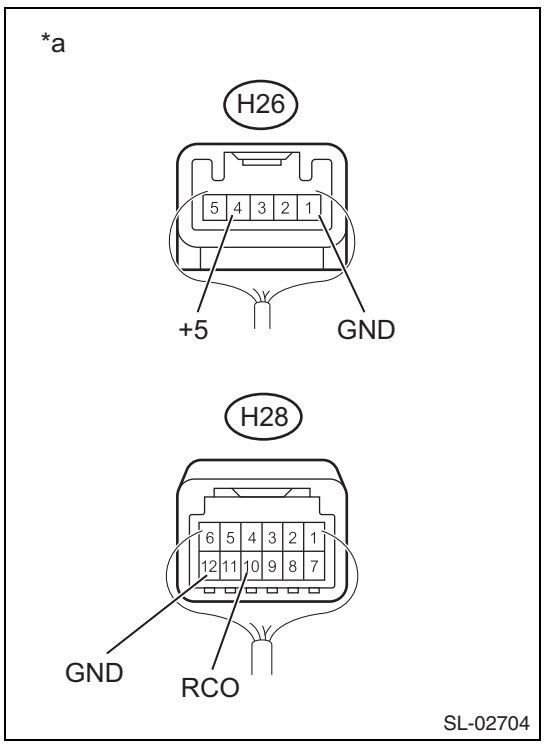

(1) Reconnect the D40 collation ECM (smart key ECM ASSY) connector.
(2) Measure the voltage according to the following table.
Resistance

Inspection terminals	Inspection conditions	Standard value
D48-11 (GND) - Chassis ground	Always	1 Ωor less

(3) Measure the voltage according to the following table.
Voltage

Inspection terminals	Inspection conditions	Standard value
H28-10 (RCO) - H28-12 (GND)*1 H26-4 (+5) - H26-1 (GND)*2	Procedure: 1.The engine switch is OFF. 2.The electrical key transmitter SUB-ASSY is not pressed.	1 V or less
	Procedure: 1.The engine switch is OFF. 2.The electrical key transmitter SUB-ASSY is pressed.	4.5 - 5.5V

*1: With TPMS

*2: Without TPMS

Captions in illustration

*a	Connector connected (Door control receiver)

NG → Replacement of the collation ECM (smart key computer ASSY)

OK

15	Inspect the door control receiver unit.

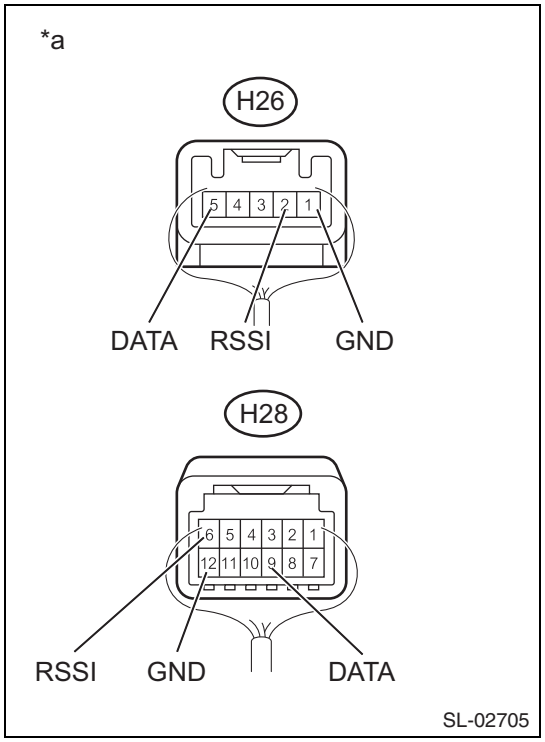

(1) Measure the voltage according to the following table.
Voltage

Inspection terminals	Inspection conditions	Standard value
H28-6 (RSSI) - H28-12 (GND)*1 H26-2 (RSSI) - H26-1 (GND)*2	Procedure: 1.All doors are closed. 2.All doors are locked. 3.The electrical key transmitter SUB-ASSY is not pressed.	11 - 14 V
	Procedure: 1.All doors are closed. 2.All doors are locked. 3.The electrical key transmitter SUB-ASSY is pressed.	2V or less
H28-9 (DATA) - H28-12 (GND)*1 H26-5 (DATA) - H26-1 (GND)*2	Procedure: 1.All doors are closed. 2.All doors are locked. 3.The electrical key transmitter SUB-ASSY is not pressed.	11 - 14 V
	Procedure: 1.All doors are closed. 2.All doors are locked. 3.The electrical key transmitter SUB-ASSY is pressed.	11 to 14 V →2 V or less →11 to 14 V, pulses generated at normal time intervals

*1: With TPMS
*2: Without TPMS

TD

Captions in illustration

*a	Connector connected (Door control receiver)

NG → Replace the door control receiver.

OK

16	Replacement of the collation ECM (smart key computer ASSY)

(1) Temporarily replace the collation ECM (smart key ECM ASSY) with a new one.

CAUTION:
When replacing the collation ECM (smart key ECM ASSY), it is also necessary to replace all the electrical key transmitter SUB-ASSYs.

Next

TD

17	Check the wireless door lock control system.

(1) Check that the wireless door lock function operates properly. (Refer to DL - 28)
Criteria: The wireless door lock function operates properly.

NG → Replace the main body ECM (multiplex network body ECM).

OK

END (collation ECM (smart key ECM ASSY) detected)

Neither smart lock nor smart unlock operation works from any of the doors (but the wireless function works)

Circuit description

When doors can be locked or unlocked using the wireless function, it means that the door control receiver and the collation ECM (smart key ECM ASSY) are communicating normally. If the entry function does not work, it may be due to one of the following: 1) the entry cancel function is enabled by customization; 2) the entry & start system communication between the electrical key transmitter SUB-ASSY and the vehicle is faulty, or; 3) electrical interference is present.

Inspection steps

CAUTION:

- Some functions of the entry & start system (entry function) use the LIN communication system and the CAN communication system. Inspect the communication function by referring to "How to troubleshoot" (refer to TD - 27). Confirm that the communication system is functioning properly before proceeding to repair the entry & start system (entry function).
- Before replacing the collation ECM (smart key ECM ASSY), refer to "entry & start system (entry function)". (Refer to TD - 5)
- After the repair work is complete, perform the "DTC output check operation" to confirm that the DTC is not output again.
- Check if the electrical key transmitter SUB-ASSY is inside the vehicle.
- Even if you want to check the entry lock operation several times, the setting does not allow you to perform the lock operation more than twice in a row. To perform the entry lock operation more than twice, you have to unlock a door once (you may use any type of unlock operation). This limitation applies only to the entry lock operation. A wireless lock or other types of lock operations can be performed any number of times without any limitations.

1	Check the power door lock operation.

(1) Operate the door control switch on the power window regulator master switch ASSY, and check if the door locks or unlocks properly according to the switch operation you have performed. (Refer to DL - 8)
Criteria: The door lock operation is performed properly.

NG → Go to "Power door lock control system" ("Symptom table").

OK

2	Read numerical values using the SSM4 ([Auto Entry Cancel SW]).

(1) Connect the SSM4 to the DLC3.
(2) Turn the ignition switch to ON.
(3) Turn on the SSM4.
(4) Enter the following menus: [Keyless Access(Collation ECM)] →[Data monitor]
(5) Based on the contents of the SSM4 display, read the [Data monitor].

TD

Entry & Start

Tester display	Measurement items / range	Normal condition	Notes for diagnosis
[Smart Cancel]	Entry cancel function setting/ [OFF] or [ON]	Mode status indication OFF: Entry & start system is not cancelled. ON: Entry & start system is cancelled.	The entry cancel function is disabled by default. If the customer wishes to cancel the entry & start system function (lock/unlock doors holding the key, etc.), you can disable this function by using the customize function (refer to TD - 37).

Result

Result	Go to
The cancel setting for the entry function is disabled.	A
The cancel setting for the entry function is enabled.	B

B → Disable the entry key cancel function. (Refer to TD - 37)

A

3	Checking radio wave environment

(1) Move the electrical key transmitter SUB-ASSY according to the instructions provided below to inspect the operation. (Refer to TD - 31)
NOTE:
- Try moving the electrical key transmitter SUB-ASSY closer to the door outer handle ASSY or the electrical key antenna, so that it is less likely to be affected by interference from external radio waves. In this way, you can identify if the problem is caused by external radio waves or not.
- Although the wireless function and the entry function transmits the same radio wave, the wave logic differs between the two. Due to

this, only one of the two functions may be affected by interference from external radio waves, while the other remains unaffected.

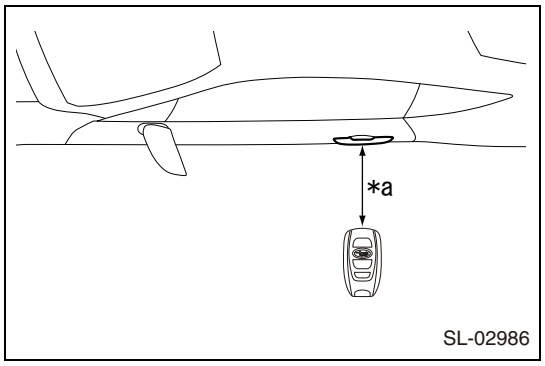

(2) Move the electrical key transmitter SUB-ASSY towards the driver's door outer handle ASSY and check how the entry lock and unlock operations work on the driver's door.
CAUTION:
If the key is within 0.2 m of the door outer handle ASSY, communication is not possible.

Captions in illustration

*a	Approx. 0.3 m

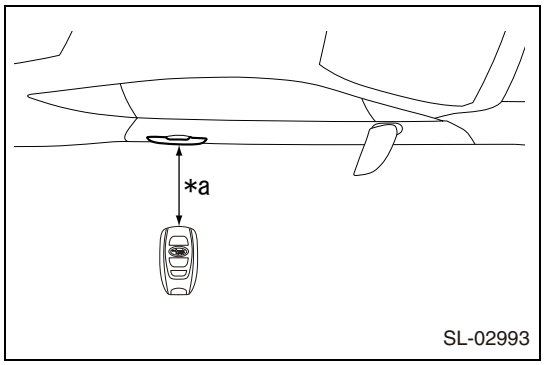

(3) Move the electrical key transmitter SUB-ASSY towards the passenger's door outer handle ASSY and check how the entry lock and unlock operations work on the passenger's door.
CAUTION:
If the key is within 0.2 m of the door outer handle ASSY, communication is not possible.

Captions in illustration

*a	Approx. 0.3 m

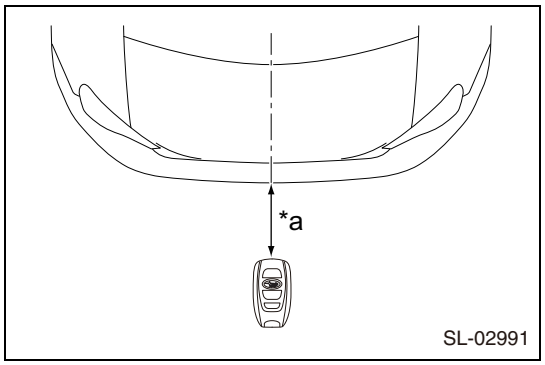

(4) Move the electrical key transmitter SUB-ASSY toward the electrical key antenna (trunk exterior antenna) and check the entry trunk open function.
CAUTION:
If the key is within 0.2m (0.656 feet) of the rear bumper, communication is not possible.

Captions in illustration

*a	Approx. 0.3 m

NOTE:

- If this inspection reveals that the problem occurs in certain locations or during certain periods of time, the problem is likely due to interference from external radio waves. In addition, installing an additional component to the vehicle makes the vehicle more susceptible to interference from external radio waves. If such components are found, remove them, and then proceed to check the operation.
- If interference from external radio waves is suspected, inquire the customer if the problem occurs in certain locations.
- Move the vehicle to another location and perform the following procedure to check if the problem improves.
- If a tool for checking radio waves such as a signal-strength meter is available, take measurements in the LF band (which is used by the vehicle antenna to create a detection area) and the RF band (which is used by the electrical key transmitter SUB-ASSY for signal transmission) in the vicinity of the vehicle to check where the radio waves might be present.

Result

Result	Go to
All operation checks fail.	A

Result	Go to
All operation checks pass.	B
One of the operation checks passes.	C

B → Interference from external radio waves

C → Proceed to check other problems (check each door using the symptom table) (refer to TD - 39).

OK

4	Perform the keyless access system check.

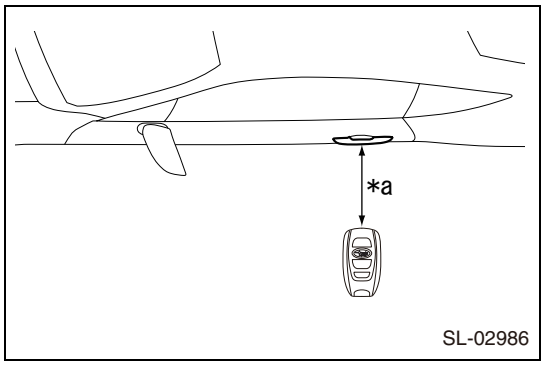

(1) Perform keyless access system check for the following antennas. (Refer to TD - 31)

(a) Check the electrical key antenna (driver's door):

Captions in illustration

*a	0.7 - 1.0m

Check if the wireless door lock buzzer beeps when the electrical key transmitter SUB-ASSY is within 0.7 - 1 m of the front door outer handle ASSY (driver's door).

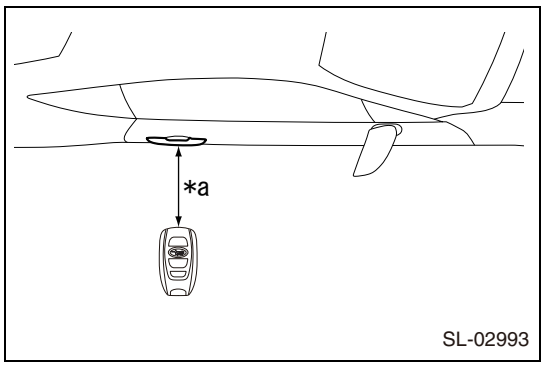

(b) Check the electrical key antenna (passenger's door):

Captions in illustration

*a	0.7 - 1.0m

Check if the wireless door lock buzzer beeps when the electrical key transmitter SUB-ASSY is within 0.7 - 1 m of the front door outer handle ASSY (passenger's door).

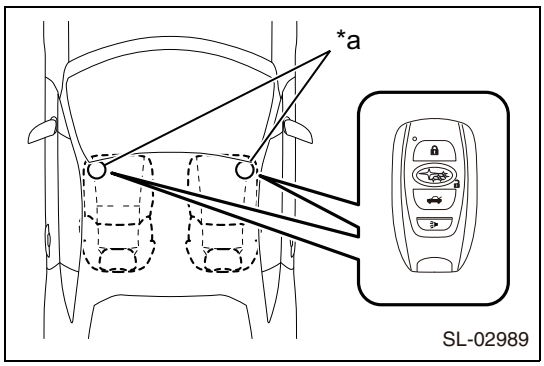

(c) Check the indoor electrical key antenna no. 1 (front floor).

Captions in illustration

*a	Inspection point

Check if the wireless door lock buzzer beeps when the electrical key transmitter SUB-ASSY is located at the inspection points.

TD

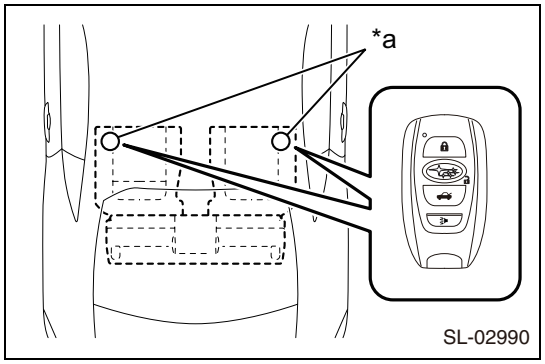

(d) Check the indoor electrical key antenna no. 2 (rear floor):

Captions in illustration

*a	Inspection point

Check if the wireless door lock buzzer beeps when the electrical key transmitter SUB-ASSY is located at the inspection points.

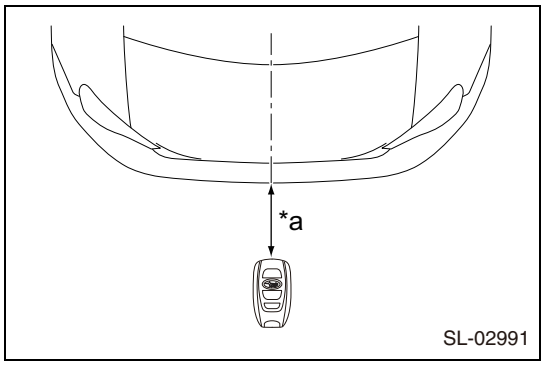

(e) Check the electrical key antenna (trunk exterior antenna).

Captions in illustration

*a	0.7 - 1.0m

Check if the wireless door lock buzzer beeps when the electrical key transmitter SUB-ASSY is within 0.7 - 1 m of the electrical key antenna (trunk exterior antenna).

Criteria: The wireless door lock buzzer beeps.

Result

Result	Go to
Failed all diagnostic mode unit inspections.	A
Failed some diagnostic mode unit inspections (door).	B
Failed some diagnostic mode unit inspections (indoor).	C
Failed some diagnostic mode unit inspections (outdoor).	D
Passed all diagnostic mode unit inspections.	E

B → Proceed to check other problems (check each door using the symptom table) (refer to TD - 39).

C → Proceed to check other problems ("ROOM OSCILLATOR DOES NOT RECOGNIZE KEY") (refer to TD - 118).

D → Proceed to check other problems ("BACK DOOR ENTRY LOCK AND UNLOCK FUNCTIONS DO NOT OPERATE") (refer to TD - 125).

E → Replacement of the collation ECM (smart key ECM ASSY)

OK

5	Inspect the electrical key transmitter SUB-ASSY unit.

(1) Check if other keys already registered to the vehicle can be used.

Result

Result	Go to
No other keys are registered to the vehicle.	A
Other keys are registered to the vehicle.	B

B → Go to Step 7.

A

6	Register a new electrical key transmitter SUB-ASSY.

(1) Register an electrical key transmitter SUB-ASSY. (Refer to the "Registration manual for immobilizer".)

Next

7	Check the electrical key transmitter SUB-ASSY (operation).

(1) Check if the entry function works properly. (Refer to TD - 31)
Criteria: The entry function works properly.

NG → Replacement of the collation ECM (smart key computer ASSY)

OK

END (electrical key transmitter SUB-ASSY malfunction)

Smart unlock operation does not work from the driver's door (but smart lock operation works)

Circuit description

If the driver's door unlock function does not work but the entry lock function works properly, the communication between the vehicle and the electrical key transmitter SUB-ASSY is normal. In this case, the problem might be caused by a defect in the unlock sensor circuit between the collation ECM (smart key ECM ASSY) and the front door outer handle ASSY (driver's side electrical key antenna).

Circuit figure

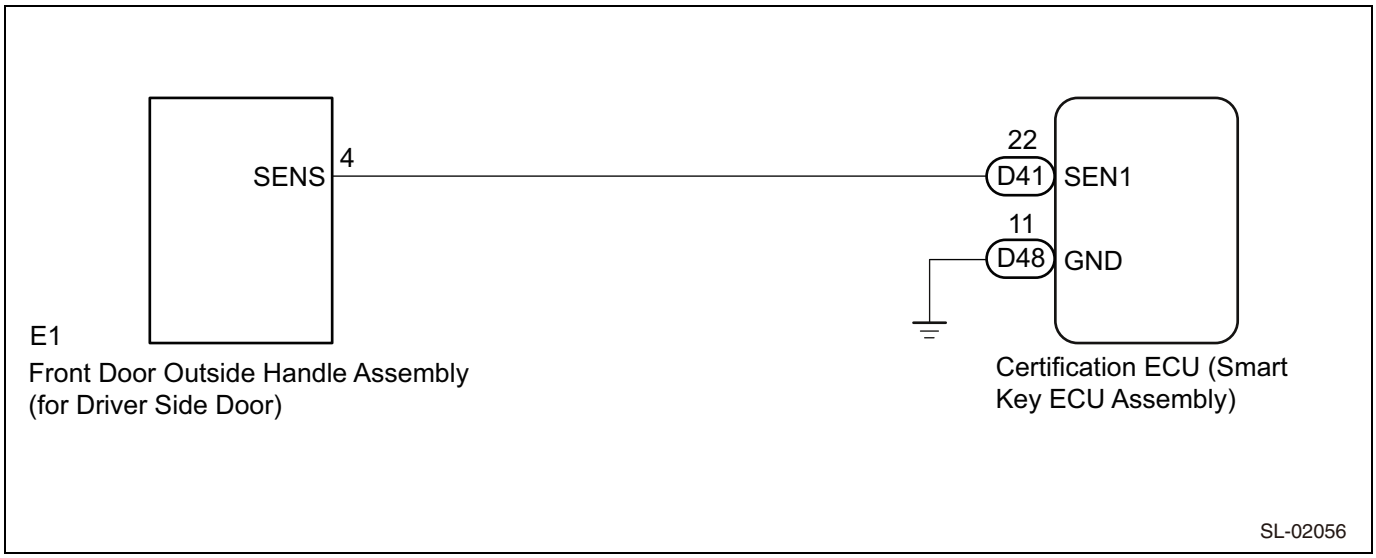

Inspection steps

CAUTION:

- Some functions of the entry & start system (entry function) use the LIN communication system and the CAN communication system. Refer to "How to troubleshoot" (entry function). Inspect the communication function by referring to TD - 27. Confirm that the communication system is functioning properly before proceeding to repair the entry & start system (entry function).
- Before replacing the collation ECM (smart key ECM ASSY), refer to "entry & start system (entry function)". (Refer to TD - 5)
- Check if the electrical key transmitter SUB-ASSY is inside the vehicle.
- After the repair work is complete, perform the "DTC output check operation" to confirm that the DTC is not output again.
- Even if you want to check the entry lock operation several times, the setting does not allow you to perform the lock operation more than twice in a row. To perform the entry lock operation more than twice, you have to unlock a door once (you may use any type of unlock operation). This limitation applies only to the entry lock operation. A wireless lock or other types of lock operations can be performed any number of times without any limitations.

1	Check the power door lock operation.

(1) Operate the door control switch on the power window regulator master switch ASSY, and check if the door locks or unlocks properly according to the switch operation you have performed. (Refer to DL - 8)

Criteria: The door lock operation is performed properly.

NG → Go to "Power door lock control system" ("Symptom table").

OK

2	Read numerical values using the SSM4.

(1) Connect the SSM4 to the DLC3.
(2) Turn the ignition switch to ON.
(3) Turn on the SSM4.
(4) Input the following menus: [Body Control] →[Data monitor]
(5) Based on the contents of the SSM4 display, read the [Data monitor].

Main body

Tester display	Measurement items / range	Normal condition	Notes for diagnosis
[D Door Lock Pos]	Driver's door unlock detection switch signal/Lock or Unlock	[Lock]: The driver's door is locked. [Unlock]: The driver's door is unlocked.	-

Criteria: On the SSM4 display, [LOCK] or [UNLOCK] is displayed as described in the table above.

NG → Go to "Light system" (door unlock detection switch circuit).

OK

3	Read numerical values using the SSM4.

(1) Connect the SSM4 to the DLC3.
(2) Turn the ignition switch to ON.
(3) Turn on the SSM4.
(4) Input the following menus: [Keyless Access(Collation ECM)] →[Data monitor]
(5) Based on the contents of the SSM4 display, read the [Data monitor].

Entry & Start

Tester display	Measurement items / range	Normal condition	Notes for diagnosis
[D seat unlock person sensor]	Front door outer handle ASSY (driver's side) (unlock sensor)/ [OFF] or [ON]	[OFF]: The front door outer handle ASSY (driver's side) (unlock sensor) is not touched. [ON]: The front door outer handle ASSY (driver's side) (unlock sensor) is touched.	• This item displays whether the unlock sensor is ON or OFF (even when the sensor is properly touched [ON] is displayed only momentarily). • This item is displayed under [Data monitor]. When the entry unlock function does not work, use this item to check if the unlock sensor is faulty.

Criteria: On the SSM4 display, [ON] or [OFF] is displayed as described in the table above.

NG → Go to Step 4.

OK

Replacement of the collation ECM (smart key computer ASSY)

4	Check the harnesses and connectors (collation ECM (smart key ECM ASSY) - front door outer handle ASSY).

(1) Disconnect the D41 and D48 collation ECM (smart key ECM ASSY) connectors.
(2) Disconnect the E1 front door outer handle ASSY connector.
(3) Measure the resistance according to the following table.

Resistance

Inspection terminals	Inspection conditions	Standard value
D41-22 (SEN1) - E1-4 (SENS)	Always	1 Ωor less
D48-11 (GND) - Chassis ground	Always	1 Ωor less
D41-22 (SEN1) - chassis ground	Always	10 kΩ or more

NG → Repair or replace the harnesses or connectors.

OK

5	Inspect the front door outer handle ASSY (driver's door) unit.

(1) Reconnect the D41 and the D48 connectors of the collation ECM (smart key ECM ASSY).
(2) Reconnect the E1 front door outer handle ASSY (driver's door) connector.
(3) Using an oscilloscope, check the waveform.

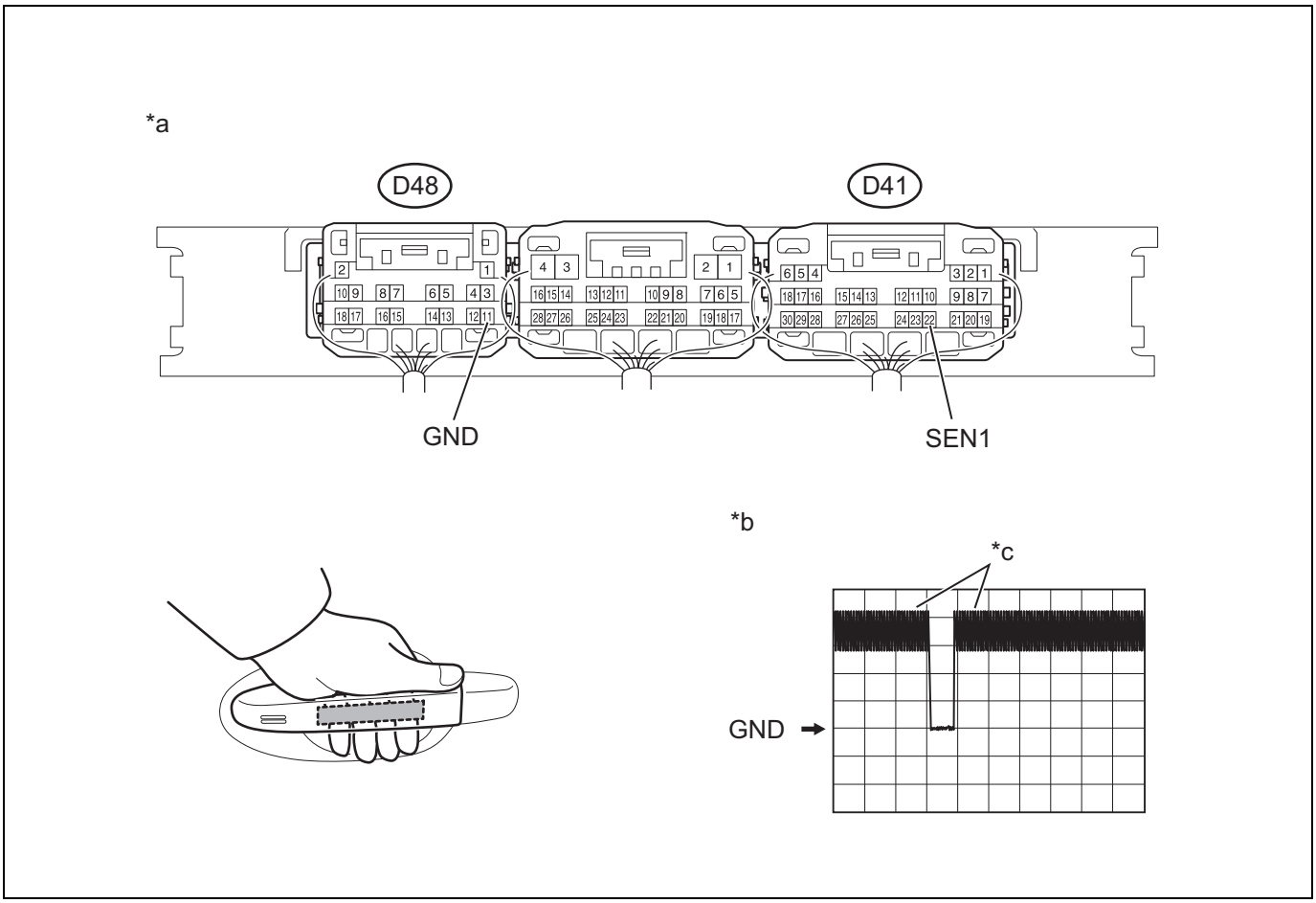

Captions in illustration

*a	Connector connected (Collation ECM (smart key ECM ASSY))	*b	Waveform
*c	Sampling is actually performed.	-	-

Criteria

Inspection terminals	Switch conditions	Tool setting	Specified condition
D41-22 (SEN1) - D48-11 (GND)	Procedure: 1. The engine switch is OFF. 2. The electrical key transmitter SUB-ASSY is outside the vehicle. 3. All doors are locked. 4. The electrical key transmitter SUB-ASSY is not in the appropriate range from the vehicle. 5. Driver's door unlock sensor, not touched →touched	2 V/DIV., 500 ms/DIV.	Pulse generation (Refer to the waveform)

NG → Replace the front door outer handle ASSY (driver's door).

OK →

Replacement of the collation ECM (smart key computer ASSY)

Smart unlock operation does not work on the passenger's door (but smart lock operation works)

Circuit description

If the entry unlock function does not work but the entry lock function works properly on the passenger's door, a request code is properly transmitted from the passenger's door. In this case, the problem might be caused by a defect in the touch sensor (collation ECM (smart key ECM ASSY) and the front door outer handle ASSY (passenger's door) (unlock sensor)).

Circuit figure

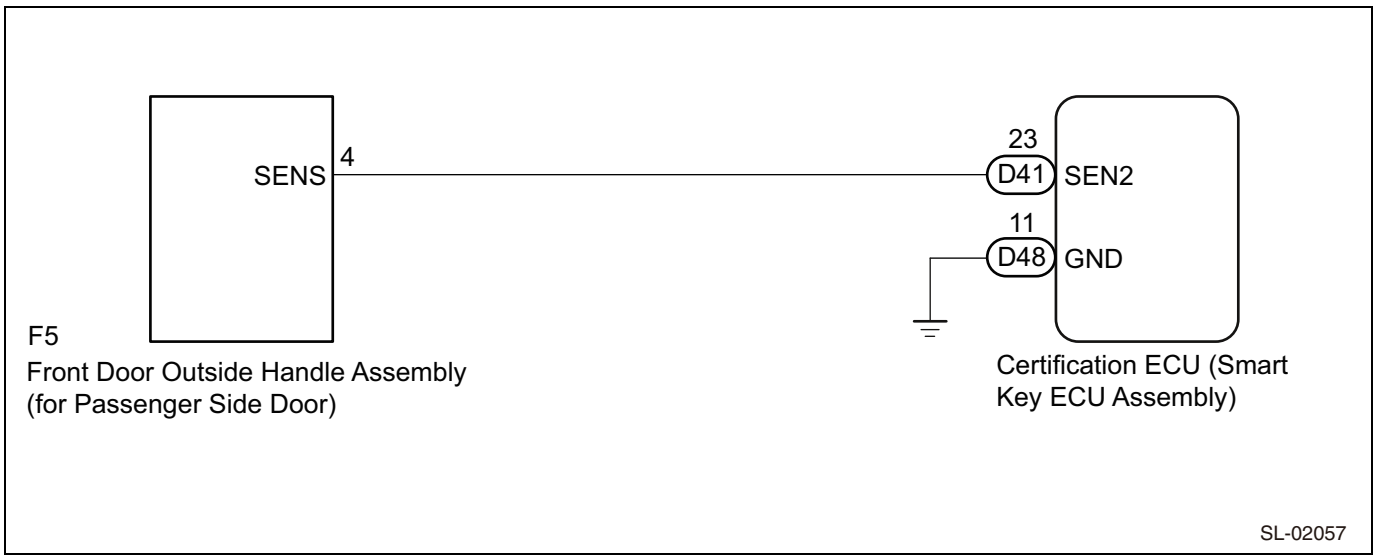

Inspection steps

CAUTION:

- Some functions of the entry & start system (entry function) use the LIN communication system and the CAN communication system. Inspect the communication function by referring to "How to troubleshoot" (refer to TD - 27). Confirm that the communication system is functioning properly before proceeding to repair the entry & start system (entry function).
- Before replacing the collation ECM (smart key ECM ASSY), refer to "entry & start system (entry function)". (Refer to TD - 5)
- Check if the electrical key transmitter SUB-ASSY is inside the vehicle.
- Even if you want to check the entry lock operation several times, the setting does not allow you to perform the lock operation more than twice in a row. To perform the entry lock operation more than twice, you have to unlock a door once (you may use any type of unlock operation). This limitation applies only to the entry lock operation. A wireless lock or other types of lock operations can be performed any number of times without any limitations.
- After the repair work is complete, perform the "DTC output check operation" to confirm that the DTC is not output again.

1	Check the power door lock operation.

(1) Operate the door control switch on the power window regulator master switch ASSY, and check if the door locks or unlocks properly according to the switch operation you have performed. (Refer to DL - 8)

Criteria: The door lock operation is performed properly.

NG → Go to "Power door lock control system" ("Symptom table").

OK

2	Read numerical values using the SSM4.

(1) Connect the SSM4 to the DLC3.
(2) Turn the ignition switch to ON.
(3) Turn on the SSM4.
(4) Input the following menus: [Body Control] →[Data monitor]

(5) Based on the contents of the SSM4 display, read the [Data monitor].

Main body

Tester display	Measurement items / range	Normal condition	Notes for diagnosis
[P Door Lock Pos]	Passenger's door unlock detection switch signal/Lock or Unlock	[Lock]: The passenger's door is locked. [Unlock]: The passenger's door is unlocked.	-

Criteria: On the SSM4 display, [LOCK] or [UNLOCK] is displayed as described in the table above.

NG → Go to "Light system" (door unlock detection switch circuit).

OK

3	Read numerical values using the SSM4.

(1) Connect the SSM4 to the DLC3.
(2) Turn the ignition switch to ON.
(3) Turn on the SSM4.
(4) Input the following menus: [Keyless Access(Collation ECM)] →[Data monitor]
(5) Based on the contents of the SSM4 display, read the [Data monitor].

Entry & Start

Tester display	Measurement items / range	Normal condition	Notes for diagnosis
[P seat unlock person sensor]	Front door outer handle ASSY (passenger's side) (unlock sensor)/[OFF] or [ON]	[OFF]: The front door outer handle ASSY (passenger's side) (unlock sensor) is not touched. [ON]: The front door outer handle ASSY (passenger's side) (unlock sensor) is touched.	• This item displays whether the unlock sensor is ON or OFF (even when the sensor is properly touched [ON] is displayed only momentarily). • This item is displayed under [Data monitor]. When the entry unlock function does not work, use this item to check if the unlock sensor is faulty.

Criteria: On the SSM4 display, [ON] or [OFF] is displayed as described in the table above.

NG → Go to Step 4.

OK

Replacement of the collation ECM (smart key computer ASSY)

4	Check the harnesses and connectors (collation ECM (smart key ECM ASSY) - front door outer handle ASSY).

(1) Disconnect the D41 and D48 collation ECM (smart key ECM ASSY) connectors.
(2) Disconnect the F5 front door outer handle ASSY connector.
(3) Measure the resistance according to the following table.

Resistance

Inspection terminals	Inspection conditions	Standard value
D41-23 (SEN2) - F5-4 (SENS)	Always	1 Ωor less
D48-11 (GND) - Chassis ground	Always	1 Ωor less
D41-23 (SEN2) - chassis ground	Always	10 kΩ or more

NG → Repair or replace the harnesses or connectors.

OK

5	Inspect the front door outer handle ASSY (passenger's door) unit.

(1) Reconnect the D41 and the D48 connectors of the collation ECM (smart key ECM ASSY).
(2) Reconnect the F5 front door outer handle ASSY (passenger's door) connector.
(3) Using an oscilloscope, check the waveform.

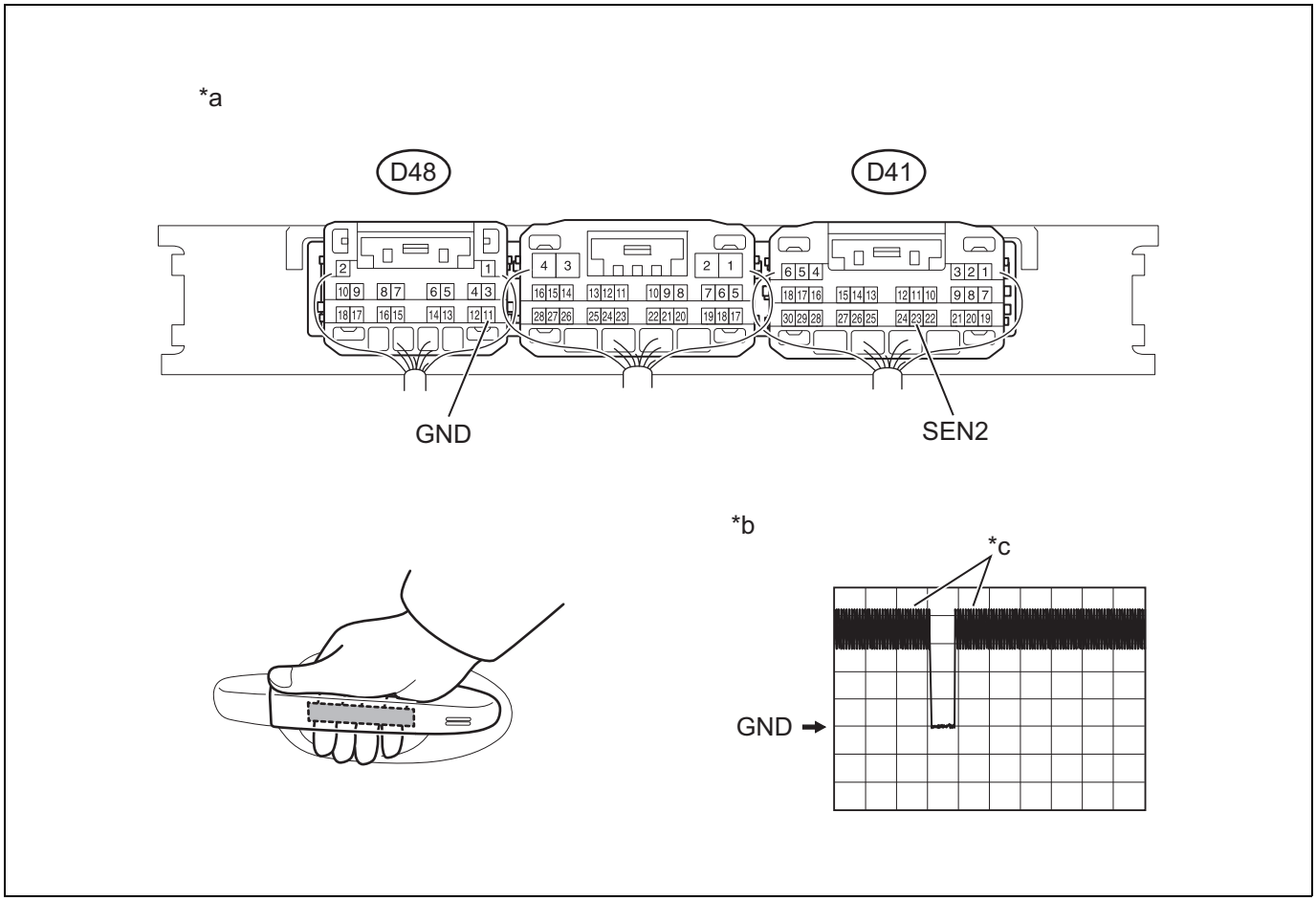

Captions in illustration

*a	Connector connected (Collation ECM (smart key ECM ASSY))	*b	Waveform
*c	Sampling is actually performed.	-	-

Criteria

Inspection terminals	Conditions	Tool setting	Specified condition
D41-23 (SEN2) - D48-11 (GND)	Procedure: 1. The engine switch is OFF. 2. The electrical key transmitter SUB-ASSY is outside the vehicle. 3. All doors are closed. 4. The electrical key transmitter SUB-ASSY is not in the appropriate range from the vehicle. 5. Passenger's door unlock sensor, not touched →touched	2 V/DIV., 500 ms/DIV.	Pulse generation (Refer to the waveform)

NG → Replace the front door outer handle ASSY (passenger's door).

OK

TD

Replacement of the collation ECM (smart key computer ASSY)

Neither smart lock nor smart unlock operation works on the driver's door

Circuit description

If only the entry lock/unlock function does not work on the driver's door, it means that a request code might not be transmitted from the driver's door, or that the front door outer handle ASSY (driver's side) (touch sensor) might be faulty. If the entry function works properly on other doors, the electrical key transmitter SUB-ASSY and the door control receiver are functioning properly. It can therefore be assumed that something is wrong with the transmission of a request code (communication between the collation ECM (smart key ECM ASSY) and the front door outer handle ASSY (driver's door) (driver's door electrical key antenna)), or that interference from external radio waves is present.

Circuit figure

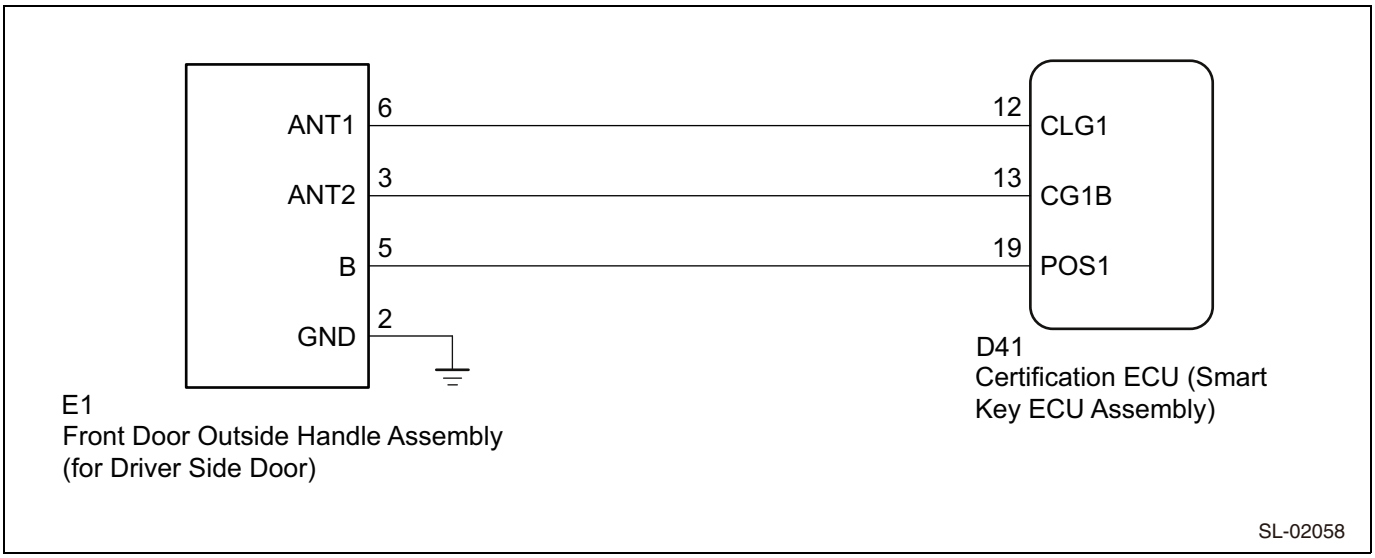

Inspection steps

CAUTION:

- Some functions of the entry & start system (entry function) use the LIN communication system and the CAN communication system. Inspect the communication function by referring to "How to troubleshoot" (refer to TD - 27). Confirm that the communication system is functioning properly before proceeding to repair the entry & start system (entry function).
- Before replacing the collation ECM (smart key ECM ASSY), refer to "entry & start system (entry function)". (Refer to TD - 5)
- Check if the electrical key transmitter SUB-ASSY is inside the vehicle.
- Make sure that another electrical key transmitter SUB-ASSY (electronic key) is not placed inside the vehicle.
- Even if you want to check the entry lock operation several times, the setting does not allow you to perform the lock operation more than twice in a row. To perform the entry lock operation more than twice, you have to unlock a door once (you may use any type of unlock operation). This limitation applies only to the entry lock operation. A wireless lock or other types of lock operations can be performed any number of times without any limitations.

1	Check the power door lock operation.

(1) Operate the door control switch on the power window regulator master switch ASSY, and check if the door locks or unlocks properly according to the switch operation you have performed. (Refer to DL - 8)

Criteria: The door lock operation is performed properly.

NG → Go to "Power door lock control system" ("Symptom table").

OK

2	Checking the waveform environment

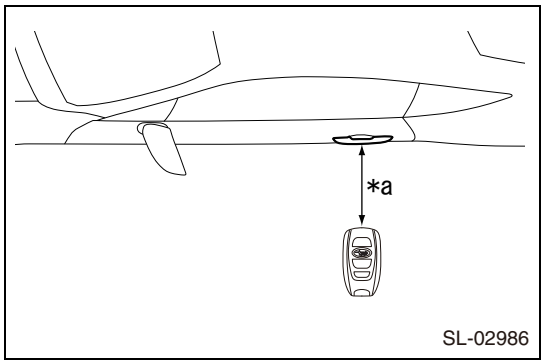

(1) Move the electrical key transmitter SUB-ASSY towards the front door outer handle ASSY and check how the entry lock and unlock operations work on the driver's door.

Captions in illustration

*a	Approx. 0.3 m

CAUTION:

If the key is within 0.2m of the door outer handle ASSY, communication is not possible.

NOTE:

- Try moving the electrical key transmitter SUB-ASSY closer to the front door outer handle ASSY, so that it is less likely to be affected by interference from external radio waves. In this way, you can identify if the problem is caused by external radio waves or not.
- If the function works properly, it is highly likely that the problem is caused by interference from external radio waves. In addition, installing an additional component to the vehicle makes the vehicle more susceptible to interference from external radio waves. If such components are found, remove them, and then proceed to check the operation.

Criteria: The entry function works properly.

Result

Result	Go to
The entry function does not work properly.	A
The entry function works properly.	B

B → Interference from external radio waves

A

3	Check the harnesses and connectors (collation ECM (smart key ECM ASSY) - front door outer handle ASSY).

(1) Disconnect the D41 collation ECM (smart key ECM ASSY) connector.
(2) Remove the E1 front door outer handle ASSY (driver's door) connector.
(3) Measure the resistance according to the following table.

Resistance

Inspection terminals	Inspection conditions	Standard value
D41-12 (CLG1) - E1-6 (ANT1)	Always	1 Ωor less
D41-13 (CG1B) - E1-3 (ANT2)	Always	1 Ωor less
D41-19 (POS1) - E1-5 (B)	Always	1 Ωor less
D41-12 (CLG1) - chassis ground	Always	10 kΩ or more
D41-13 (CG1B) - chassis ground	Always	10 kΩ or more
D41-19 (POS1) - chassis ground	Always	10 kΩ or more

NG → Repair or replace the harnesses or connectors.

OK

4	Inspect the collation ECM (smart key ECM ASSY) (output to the driver's side electrical key antenna).

(1) Reconnect the D41 connector of the collation ECM (smart key ECM ASSY).

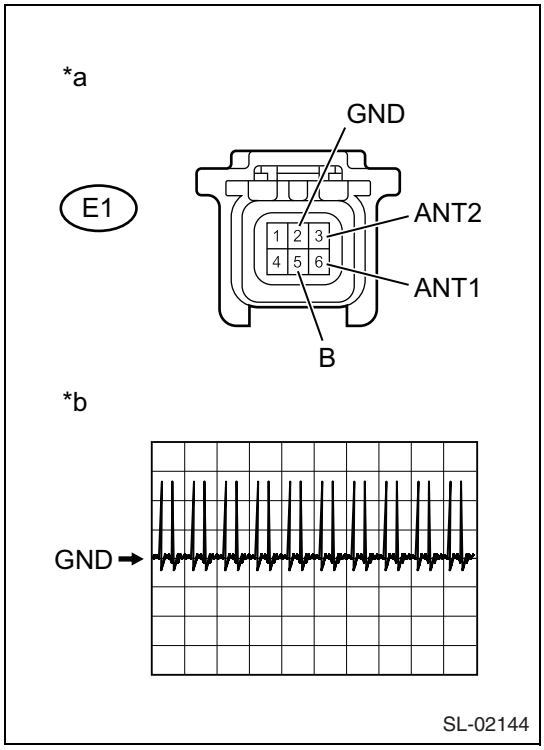

(2) Using an oscilloscope, check the waveform.

Captions in illustration

*a	Front side of vehicle wiring harness connector (Front door outer handle ASSY (driver's side)
*b	Waveform

Criteria

Inspection terminals	Conditions	Tool setting	Specified condition
E1-6 (ANT1) - E1-3 (ANT2)	Procedure: 1. The engine switch is OFF. 2. The electrical key transmitter SUB-ASSY is outside the vehicle. 3. All doors are closed. 4. The electrical key transmitter SUB-ASSY is not inside the vehicle. 5. The electrical key transmitter SUB-ASSY is outside the detection area*1. 6. All doors are locked by a wireless operation.	2 V/DIV., 500 ms/DIV.	Pulse generation (Refer to the waveform)

*1: For a detailed description on outside the entry function detection area, refer to "Operation check". (Refer to TD - 31)

NG → Replacement of the collation ECM (smart key computer ASSY)

OK

5	Replace the front door outer handle ASSY (driver's door).

(1) Temporarily replace the front door outer handle ASSY (driver's door) with a new one or one that functions normally. (Refer to DH - 31)

Next

6	Check the front door outer handle ASSY (driver's door) (operation).

(1) Check if the entry function works properly. (Refer to TD - 31)

Criteria: The entry function works properly.

NG → Replacement of the collation ECM (smart key computer ASSY)

Next

END (front door outer handle ASSY malfunction)

Neither smart lock nor smart unlock operation works on the passenger's door

Circuit description

If the entry lock/unlock function does not work on the passenger's door, it means that a request code might not be transmitted from the passenger's door, or that the front door outer handle ASSY (passenger's side) (touch sensor) might be faulty. If the entry function works properly on other doors, the electrical key transmitter SUB-ASSY and the door control receiver are functioning properly. It can therefore be assumed that something is wrong with the transmission of a request code (communication between the collation ECM (smart key ECM ASSY) and the front door outer handle ASSY (passenger's door) (passenger's door electrical key antenna)), or that interference from external radio waves is present.

TD

Circuit figure

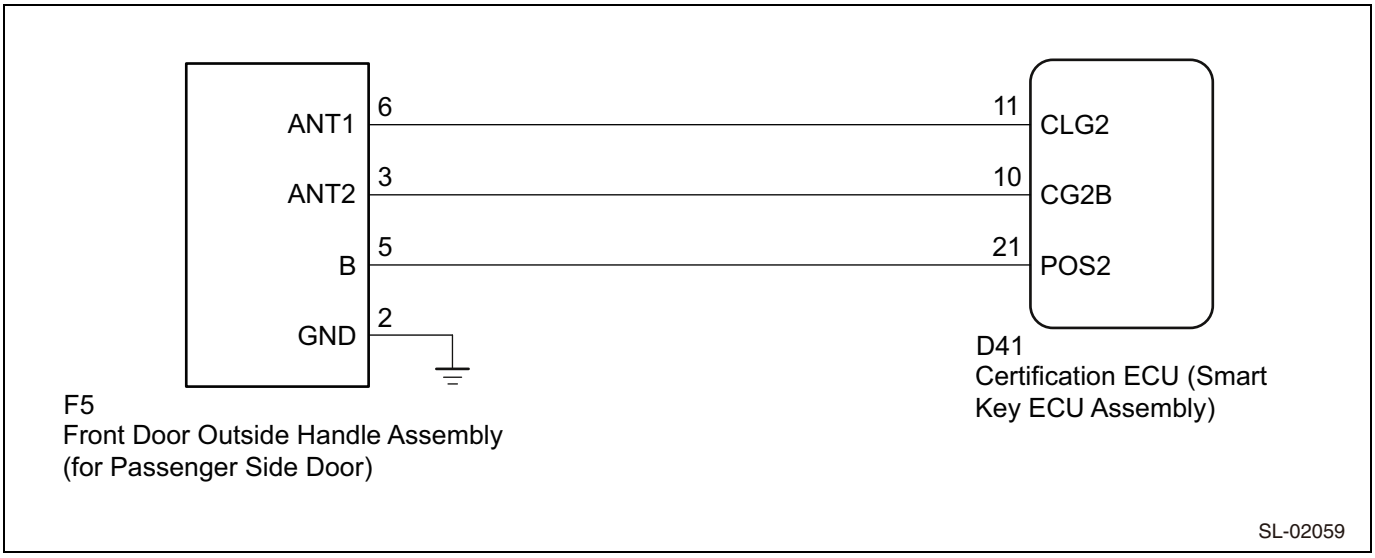

Inspection steps

CAUTION:

- Some functions of the entry & start system (entry function) use the LIN communication system and the CAN communication system. Inspect the communication function by referring to "How to troubleshoot" (refer to TD - 27). Confirm that the communication system is functioning properly before proceeding to repair the entry & start system (entry function).
- Before replacing the collation ECM (smart key ECM ASSY), refer to "entry & start system (entry function)". (Refer to TD - 5)
- Check if the electrical key transmitter SUB-ASSY is inside the vehicle.
- Make sure that another electrical key transmitter SUB-ASSY (electronic key) is not placed inside the vehicle.
- Even if you want to check the entry lock operation several times, the setting does not allow you to perform the lock operation more than twice in a row. To perform the entry lock operation more than twice, you have to unlock a door once (you may use any type of unlock operation). This limitation applies only to the entry lock operation. A wireless lock or other types of lock operations can be performed any number of times without any limitations.

1	Check the power door lock operation.

(1) Operate the door control switch on the power window regulator master switch ASSY, and check if the door locks or unlocks properly according to the switch operation you have performed.

Criteria: The door lock operation is performed properly.

NG → Go to "Power door lock control system" ("Symptom table").

OK

2	Checking the waveform environment

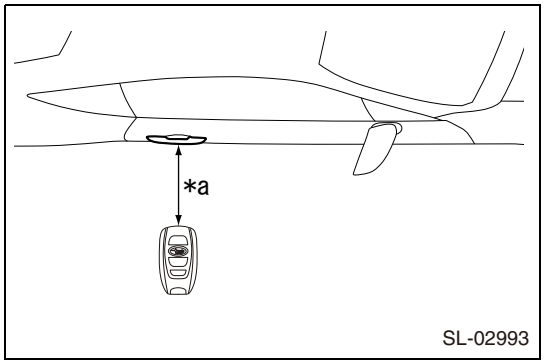

(1) Move the electrical key transmitter SUB-ASSY towards the front door outer handle ASSY and check how the entry lock and unlock operations work on the passenger's door.

Captions in illustration

*a	Approx. 0.3 m

CAUTION:
If the key is within 0.2 m of the door outer handle ASSY, communication is not possible.

NOTE:

- Try moving the electrical key transmitter SUB-ASSY closer to the front door outer handle ASSY, so that it is less likely to be affected by interference from external radio waves. In this way, you can identify if the problem is caused by external radio waves or not.
- If the function works properly, it is highly likely that the problem is caused by interference from external radio waves. In addition, installing an additional component to the vehicle makes the vehicle more susceptible to interference from external radio waves. If such components are found, remove them, and then proceed to check the operation.

Result

Result	Go to
The entry function does not work properly.	A
The entry function works properly.	B

B → Interference from external radio waves

A

3	Check the harnesses and connectors (collation ECM (smart key ECM ASSY) - front door outer handle ASSY).

(1) Disconnect the D41 collation ECM (smart key ECM ASSY) connector.
(2) Remove the F5 front door outer handle ASSY (passenger's door) connector.
(3) Measure the resistance according to the following table.

Resistance

Inspection terminals	Inspection conditions	Standard value
D41-11 (CLG2) - F5-6 (ANT1)	Always	1 Ωor less

Inspection terminals	Inspection conditions	Standard value
D41-10 (CG2B) - F5-3 (ANT2)	Always	1 Ωor less
D41-21 (POS2) - F5-5 (B)	Always	1 Ωor less
D41-11 (CLG2) - chassis ground	Always	10 kΩ or more
D41-10 (CG2B) - chassis ground	Always	10 kΩ or more
D41-21 (POS2) - chassis ground	Always	10 kΩ or more

NG → Repair or replace the harnesses or connectors.

OK

TD

4	Inspect the collation ECM (smart key ECM ASSY) (output to the passenger's side electrical key antenna).

(1) Reconnect the D41 connector of the collation ECM (smart key ECM ASSY).

(2) Using an oscilloscope, check the waveform.

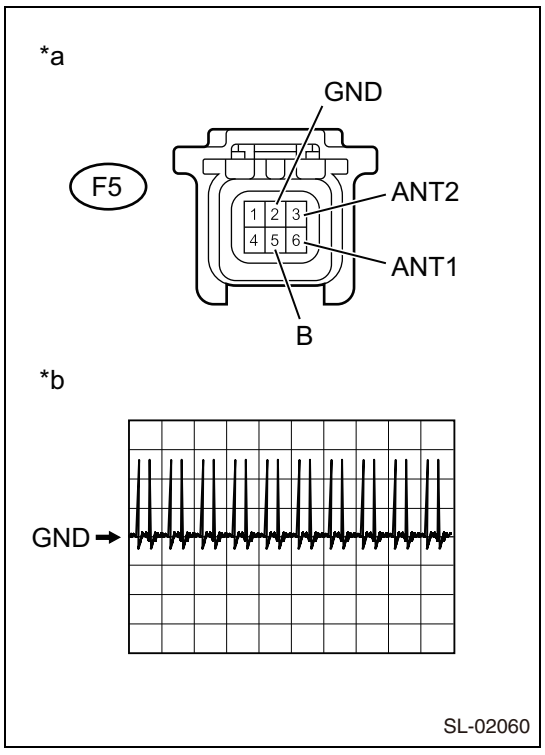

Captions in illustration

*a	Front side of vehicle wiring harness connector Front door outer handle ASSY
*b	Waveform

Criteria

Inspection terminals	Conditions	Tool setting	Specified condition
F5-6 (ANT1) - F5-3 (ANT2)	Procedure: 1. The engine switch is OFF. 2. The electrical key transmitter SUB-ASSY is outside the vehicle. 3. All doors are closed. 4. The electrical key transmitter SUB-ASSY is not inside the vehicle. 5. The electrical key transmitter SUB-ASSY is outside the detection area*1. 6. All doors are locked by a wireless operation.	2 V/DIV., 500 ms/DIV.	Pulse generation (Refer to the waveform)

*1: For a detailed description about the outside of the entry function detection area, refer to "Operation check". (Refer to TD - 31)

NG → Replacement of the collation ECM (smart key computer ASSY)

OK

5	Replace the front door outer handle ASSY (passenger's door).

(1) Temporarily replace the front door outer handle ASSY (passenger's door) with a new one or one that functions normally.

Next

6	Check the front door outer handle ASSY (passenger's door) (operation).

(1) Check if the entry function works properly. (Refer to TD - 31)
Criteria: The entry function works properly.

NG → Replacement of the collation ECM (smart key computer ASSY)

OK

END (front door outer handle ASSY malfunction)

Smart lock operation does not work on the driver's door (but smart unlock operation works)

Circuit description

If the driver's door lock function does not work but the entry unlock function works properly, the communication between the vehicle and the electrical key transmitter SUB-ASSY is normal. In this case, the problem might be caused by a defect in the lock sensor circuit between the collation ECM (smart key ECM ASSY) and the front door outer handle ASSY (driver's side electrical key antenna).

Circuit figure

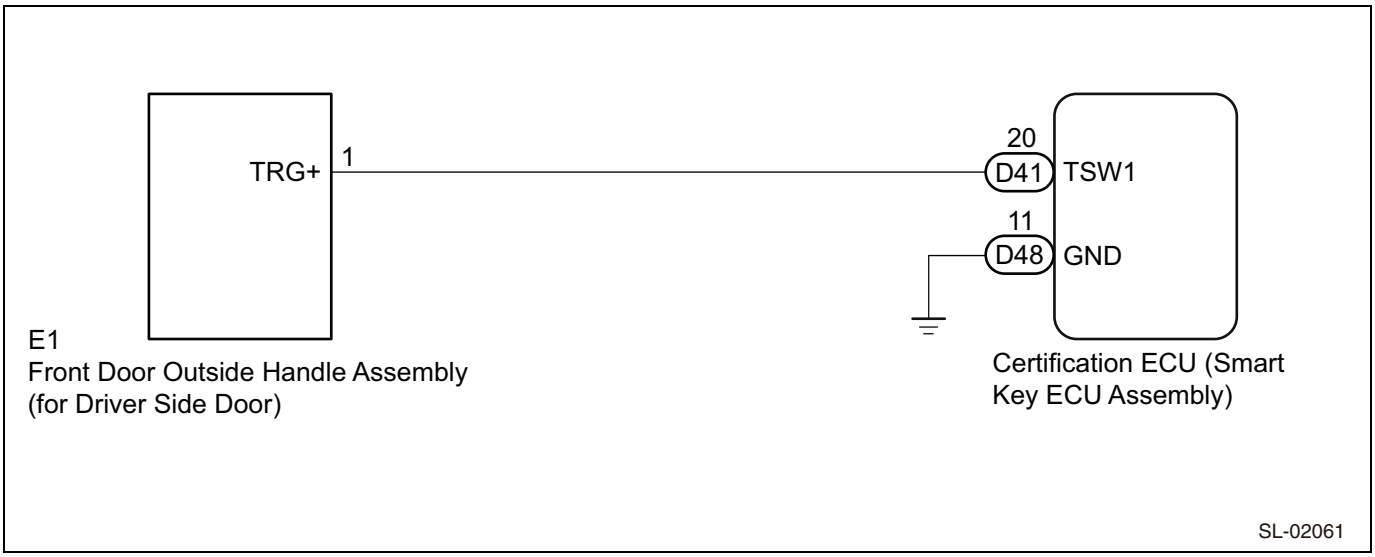

TD

Inspection steps

CAUTION:

- Some functions of the entry & start system (entry function) use the LIN communication system and the CAN communication system. Inspect the communication function by referring to "How to troubleshoot" (refer to TD - 27). Confirm that the communication system is functioning properly before proceeding to repair the entry & start system (entry function).
- Before replacing the collation ECM (smart key ECM ASSY), refer to "entry & start system (entry function)". (Refer to TD - 5)
- Check if the electrical key transmitter SUB-ASSY is inside the vehicle.
- Even if you want to check the entry lock operation several times, the setting does not allow you to perform the lock operation more than twice in a row. To perform the entry lock operation more than twice, you have to unlock a door once (you may use any type of unlock operation). This limitation applies only to the entry lock operation. A wireless lock or other types of lock operations can be performed any number of times without any limitations.

1	Check the power door lock operation.

(1) Operate the door control switch on the master switch ASSY, and check if the door locks or unlocks properly according to the switch operation you have performed.

Criteria: The door lock operation is performed properly.

NG → Go to "Power door lock control system" ("Symptom table").

OK

2	Read numerical values using the SSM4.

(1) Connect the SSM4 to the DLC3.
(2) Turn the ignition switch to ON.
(3) Turn on the SSM4.
(4) Input the following menus: [Keyless Access(Collation ECM)] →[Data monitor]
(5) Based on the contents of the SSM4 display, read the [Data monitor].

Entry & Start

Tester display	Measurement items / range	Normal condition	Notes for diagnosis
[D seat lock person sensor]	Front door outer handle ASSY (driver's side) (lock sensor)/ [OFF] or [ON]	[OFF]: The front door outer handle ASSY (driver's side) (lock sensor) is not touched. [ON]: The front door outer handle ASSY (driver's side) (lock sensor) is touched.	• This item displays whether the lock sensor is ON or OFF (even when the sensor is properly touched [ON] is displayed only momentarily). • This item is displayed under [Data monitor]. When the entry lock function does not work, use this item to check if the unlock sensor is faulty.

Criteria: On the SSM4 display, [ON] or [OFF] is displayed as described in the table above.

NG → Go to Step 3.

OK

Replacement of the collation ECM (smart key computer ASSY)

3	Check the harnesses and connectors (collation ECM (smart key ECM ASSY) - front door outer handle ASSY).

(1) Disconnect the D41 and D48 collation ECM (smart key ECM ASSY) connectors.
(2) Disconnect the E1 front door outer handle ASSY connector.
(3) Measure the resistance according to the following table.

Resistance

Inspection terminals	Inspection conditions	Standard value
D41-20 (TSW1) - E1-1 (TRG+)	Always	1 Ωor less
D48-11 (GND) - Chassis ground	Always	1 Ωor less
D41-20 (TSW1) - chassis ground	Always	10 kΩ or more

NG → Repair or replace the harnesses or connectors.

OK

4	Inspect the front door outer handle ASSY (driver's door) unit.

(1) Reconnect the D41 and the D48 connectors of the collation ECM (smart key ECM ASSY).
(2) Reconnect the E1 front door outer handle ASSY (driver's door) connector.
(3) Using an oscilloscope, check the waveform.

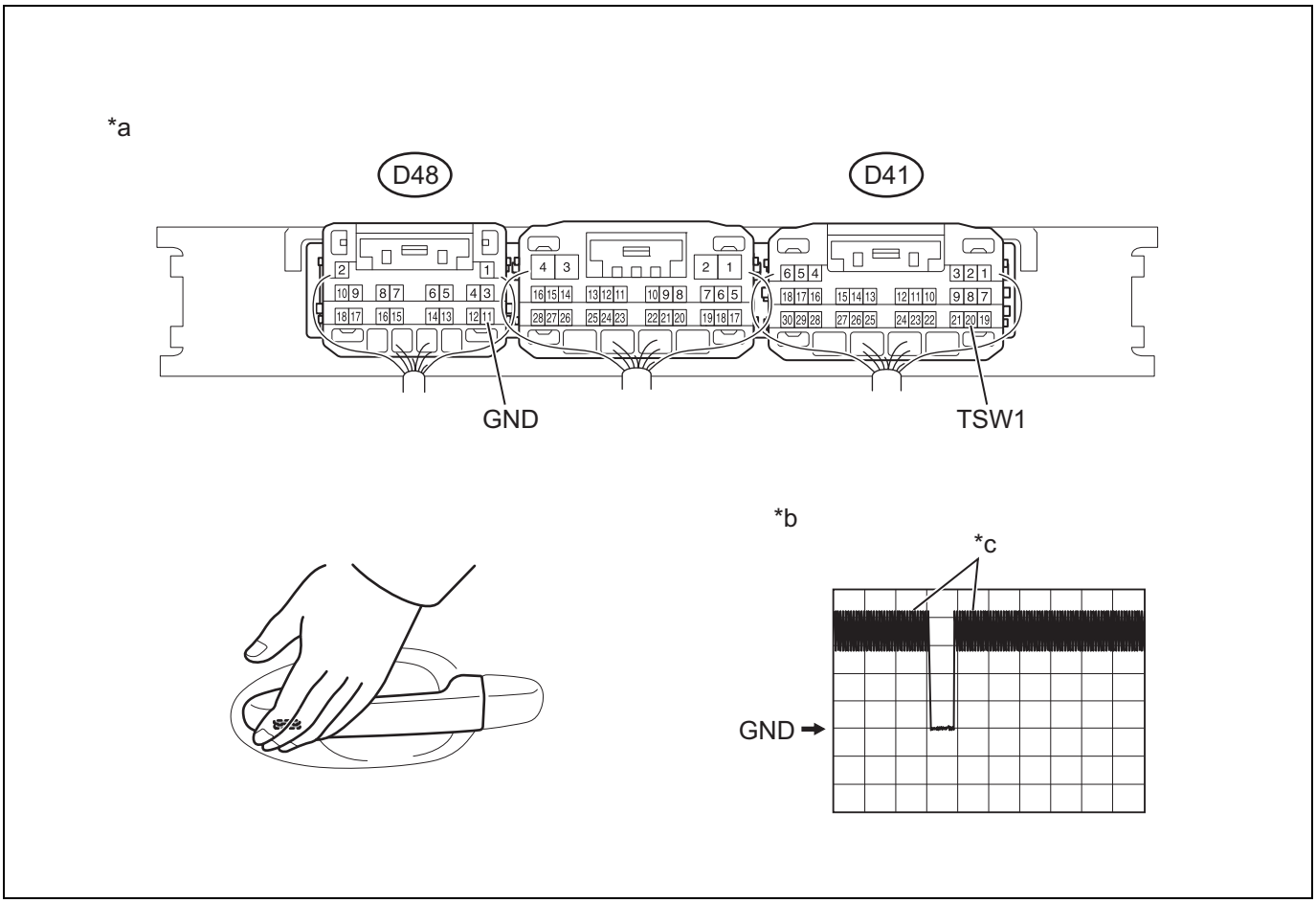

TD

Captions in illustration

*a	Connector connected (Collation ECM (smart key ECM ASSY))	*b	Waveform
*c	The driver's side lock sensor is touched.	-	-

Criteria

Inspection terminals	Switch conditions	Tool setting	Specified condition
D41-20 (TSW1) - D48-11 (GND)	Procedure: 1. The engine switch is OFF. 2. The electrical key transmitter SUB-ASSY is outside the vehicle. 3. All doors are closed. 4. Driver's door lock sensor, not touched →touched	2 V/DIV., 500 ms/DIV.	Pulse generation (Refer to the waveform)

NG → Replace the front door outer handle ASSY (driver's door).

OK

Replacement of the collation ECM (smart key computer ASSY)

Smart lock operation does not work on the passenger's door (but smart unlock operation works)

Circuit description

If the passenger's door lock function does not work but the entry unlock function works properly, the communication between the vehicle and the electrical key transmitter SUB-ASSY is normal. In this case, the problem might be caused by a defect in the lock sensor circuit between the collation ECM (smart key ECM ASSY) and the front door outer handle ASSY (driver's side electrical key antenna).

Circuit figure

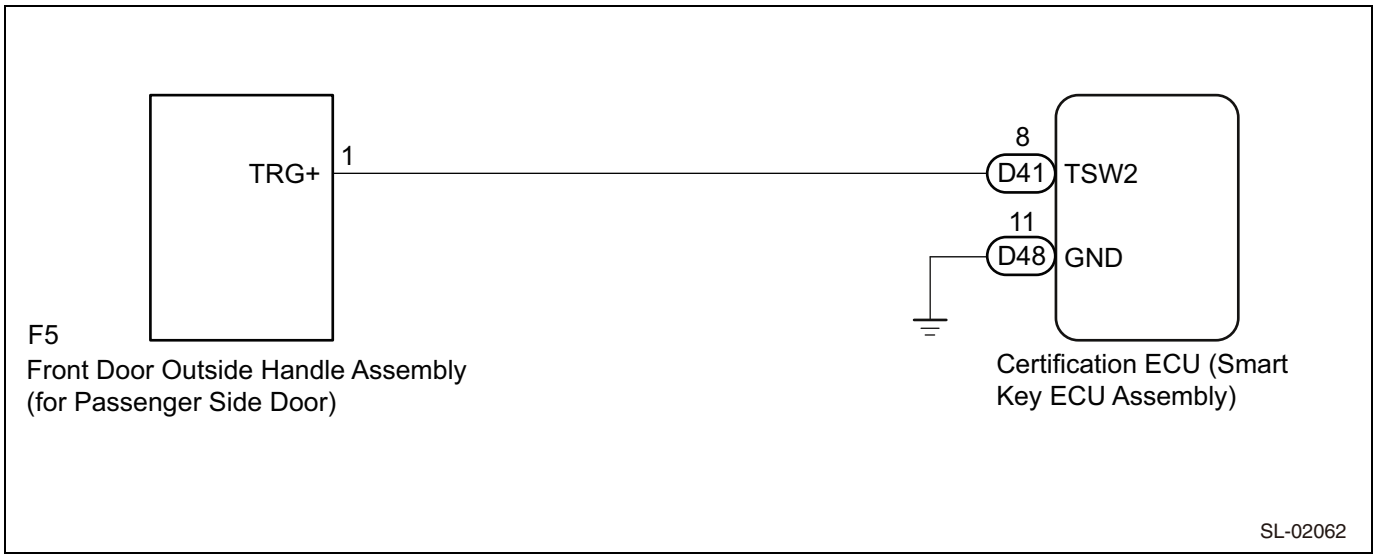

Inspection steps

CAUTION:

- Some functions of the entry & start system (entry function) use the LIN communication system and the CAN communication system. Inspect the communication function by referring to "How to troubleshoot" (refer to TD - 27). Confirm that the communication system is functioning properly before proceeding to repair the entry & start system (entry function).
- Before replacing the collation ECM (smart key ECM ASSY), refer to "entry & start system (entry function)". (Refer to TD - 5)
- Check if the electrical key transmitter SUB-ASSY is inside the vehicle.
- Even if you want to check the entry lock operation several times, the setting does not allow you to perform the lock operation more than twice in a row. To perform the entry lock operation more than twice, you have to unlock a door once (you may use any type of unlock operation). This limitation applies only to the entry lock operation. A wireless lock or other types of lock operations can be performed any number of times without any limitations.

1	Check the power door lock operation.

(1) Operate the door control switch on the master switch ASSY, and check if the door locks or unlocks properly according to the switch operation you have performed.

Criteria: The door lock operation is performed properly.

NG → Go to "Power door lock control system" ("Symptom table").

OK

2	Read numerical values using the SSM4.

(1) Connect the SSM4 to the DLC3.
(2) Turn the ignition switch to ON.
(3) Turn on the SSM4.

(4) Input the following menus: [Keyless Access(Collation ECM)] →[Data monitor]
(5) Based on the contents of the SSM4 display, read the [Data monitor].

Entry & Start

Tester display	Measurement items / range	Normal condition	Notes for diagnosis
[P seat lock person sensor]	Front door outer handle ASSY (passenger's side) (lock sensor)/[OFF] or [ON]	[OFF]: The front door outer handle ASSY (passenger's side) (lock sensor) is not touched. [ON]: The front door outer handle ASSY (passenger's side) (lock sensor) is touched.	• This item displays whether the lock sensor is ON or OFF (even when the sensor is properly touched [ON] is displayed only momentarily). • This item is displayed under [Data monitor]. When the entry lock function does not work, use this item to check if the unlock sensor is faulty.

Criteria: On the SSM4 display, [ON] or [OFF] is displayed as described in the table above.

TD

NG → Go to Step 3.

OK

Replacement of the collation ECM (smart key computer ASSY)

3	Check the harnesses and connectors (collation ECM (smart key ECM ASSY) - front door outer handle ASSY).

(1) Disconnect the D41 and D48 collation ECM (smart key ECM ASSY) connectors.
(2) Remove the F5 front door outer handle ASSY (driver's door) connector.
(3) Measure the resistance according to the following table.

Resistance

Inspection terminals	Inspection conditions	Standard value
D41-8 (TSW2) - F5-1 (TRG+)	Always	1 Ωor less
D48-11 (GND) - Chassis ground	Always	1 Ωor less
D41-8 (TSW2) - chassis ground	Always	10 kΩ or more

NG → Repair or replace the harnesses or connectors.

OK

4	Inspect the front door outer handle ASSY (passenger's door) unit.

(1) Reconnect the D41 and the D48 connectors of the collation ECM (smart key ECM ASSY).
(2) Reconnect the F5 front door outer handle ASSY (driver's door) connector.
(3) Using an oscilloscope, check the waveform.

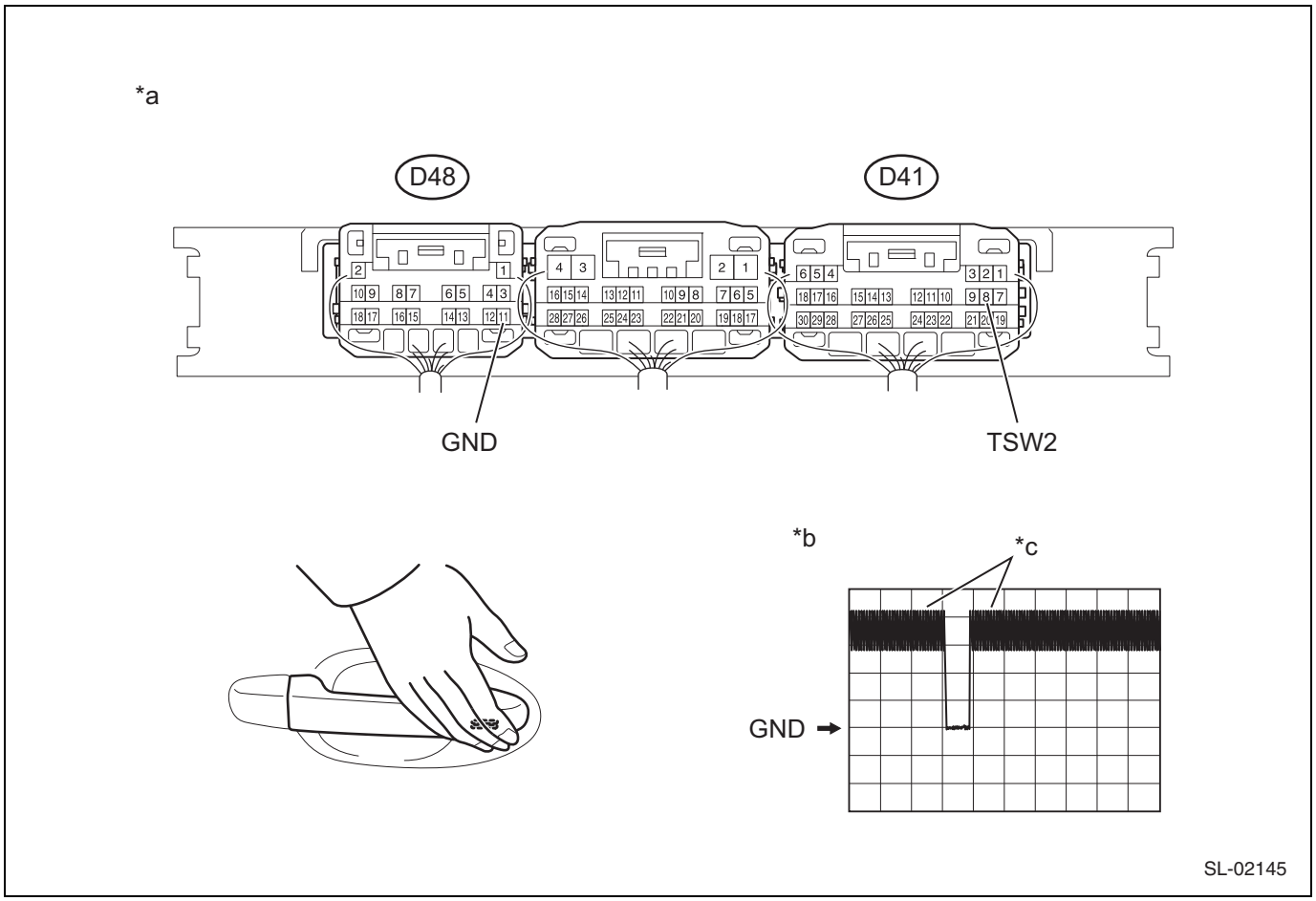

Captions in illustration

*a	Connector connected (Collation ECM (smart key ECM ASSY))	*b	Waveform
*c	The passenger's door lock sensor is touched.	-	-

Criteria

Inspection terminals	Switch conditions	Tool setting	Specified condition
D41-8 (TSW2) - D48-11 (GND)	Procedure: 1. The engine switch is OFF. 2. The electrical key transmitter SUB-ASSY is outside the vehicle. 3. All doors are closed. 4. Passenger's door lock sensor, not touched →touched	2 V/DIV., 500 ms/DIV.	Pulse generation (Refer to the waveform)

NG → Replace the front door outer handle ASSY (passenger's door).

OK

Replacement of the collation ECM (smart key computer ASSY)

Interior collation is NG

Circuit description

If the code check operation cannot be performed inside the vehicle, communication between the vehicle (indoor electrical key antenna ASSY (front floor or rear floor)) and the electrical key transmitter SUB-ASSY might be faulty, or the collation ECM (smart key ECM ASSY) might be faulty. When the electrical key transmitter SUB-ASSY is located inside the vehicle, the key ID code transmitted from the electrical key transmitter SUB-ASSY is matched against the one stored in the collation ECM (smart key ECM ASSY). If this operation cannot be performed or if the code does not match, the engine switch does not turn ON (IG) and the engine cannot be started.

If the electrical key transmitter SUB-ASSY is located inside the vehicle with doors unlocked, the collation ECM (smart key ECM ASSY) sends out radio waves to detect the electrical key transmitter SUB-ASSY, and the indoor electrical key antenna ASSY becomes enabled. If the presence of the electrical key transmitter SUB-ASSY inside the detection area is confirmed, the collation ECM (smart key ECM ASSY) responds to the key ID code. This information is received by the door control receiver, which is then sent to the collation ECM (smart key ECM ASSY).

Circuit figure

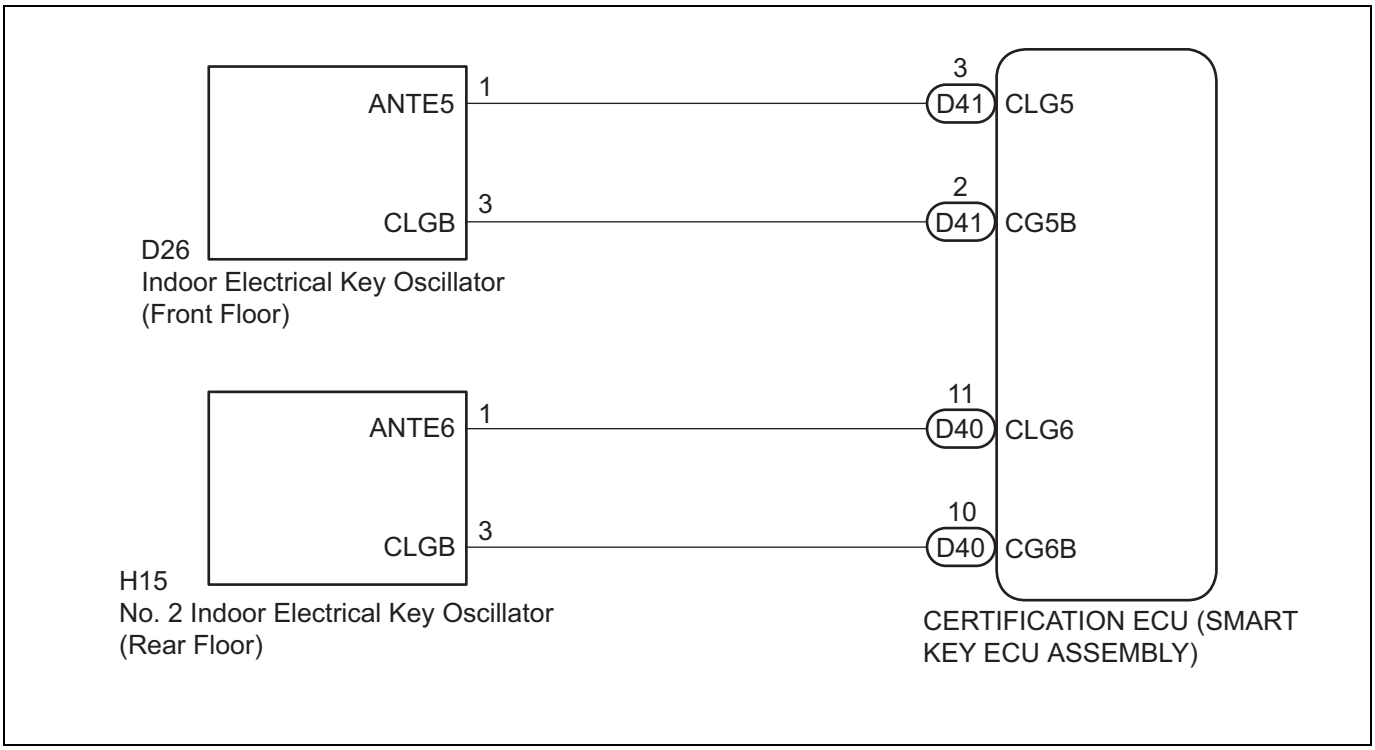

Inspection steps

CAUTION:

- Some functions of the entry & start system (entry function) use the LIN communication system and the CAN communication system. Inspect the communication function by referring to "How to troubleshoot" (refer to TD - 27). Confirm that the communication system is functioning properly before proceeding to repair the entry & start system (entry function).
- Before replacing the collation ECM (smart key ECM ASSY), refer to "entry & start system (entry function)". (Refer to TD - 5)
- An antenna coil is present between the 2 terminals of the indoor electrical key antenna ASSY.

NOTE:

Ensure that the entry cancel function (one of the customize setting available for the entry & start system) is not enabled. (Refer to TD - 37)

1	Check the entry & start system (entry function).

(1) Check if the entry lock/unlock function works properly. (Refer to TD - 31)

Criteria: The entry lock/unlock function works properly.

NG → Go to "Symptom table" (entry & start system (entry function)) (refer to TD - 84).

OK

2	Check the entry & start system (start function).

(1) Remove the battery from the electrical key transmitter SUB-ASSY. (Refer to DL - 92)

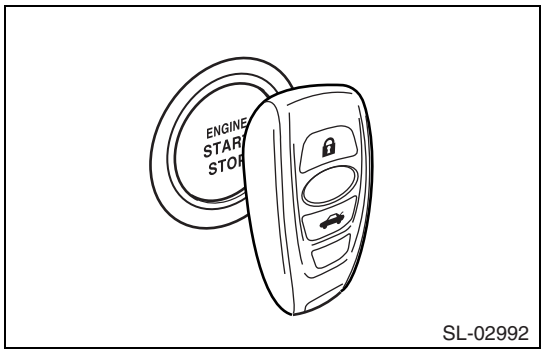

SL-02992

(2) Depress the brake pedal *1 or the clutch pedal *2, hold the electrical key transmitter SUB-ASSY near the engine switch, with its switch facing yourself.
*1: With automatic transmission
*2: With manual transmission

(3) Turn to IG ON, and check if the engine starts when you operate the engine switch.
NOTE:
- If the presence of the electrical key transmitter SUB-ASSY inside the detection area cannot be confirmed, remove the transmitter battery from the electrical key transmitter SUB-ASSY and then place the electrical key transmitter SUB-ASSY over the engine switch to check if the engine starts.
- If the engine does not start during this inspection procedure, the collation ECM (smart key ECM ASSY), steering lock actuator ASSY (steering lock ECM), or the ID code box*1 might be faulty.

*1: With ID code box

Criteria: The engine starts.

NG → Go to "Entry & start system" (start function) (refer to TD - 146).

OK

3	Checking the waveform environment

(1) Insert the transmitter battery into the electrical key transmitter SUB-ASSY. (Refer to DL - 92)

(2) Move the electrical key transmitter SUB-ASSY toward the indoor electrical key antenna ASSY no. 1 (front floor) and check if the engine starts.
CAUTION:
If the key is within 0.2 m (0.656 feet) of the indoor electrical key antenna ASSY no. 1 (front floor), communication may not be possible.

(3) Move the electrical key transmitter SUB-ASSY toward the indoor electrical key antenna ASSY no. 2 (rear floor) and check if the engine starts.
If a setting other than [All] is specified for [Ignition Available Area] by customization, the engine does not start. Before proceeding with this inspection procedure, check that [All] is selected for this item. (Refer to TD - 37)
CAUTION:
If the key is within 0.2 m (.0.656 feet) of the indoor electrical key antenna ASSY no. 2 (rear floor), communication is not possible.

NOTE:

- Try moving the electrical key transmitter SUB-ASSY closer to the door control receiver, so that it is less exposed to external radio waves. In this way, you can identify if the problem is caused by external radio waves or not.
- If the failure occurs in certain locations or during certain periods of time, it may be due to interference from external radio waves. In addition, the vehicle can also be affected by external radio waves generated by components installed by a dealer. If such components are found, remove them before inspecting the vehicle.
- Being close to a broadcast antenna, a large video display, a wireless garage door opener system, a wireless security camera, or a home security system makes the vehicle susceptible to interference from external radio waves. If this is the case, move the vehicle to another location to check if the problem improves.
- If a tool for checking radio waves such as a signal-strength meter is available, take measurements in the LF band (which is used by the vehicle antenna to create a detection area) and the RF band (which is used by the electrical key transmitter SUB-ASSY for signal transmission) in the vicinity of the vehicle to check where the radio waves might be present.

Criteria: The engine starts.

NG → Go to Step 4.

OK

Interference from external radio waves

4	Perform the keyless access system check.

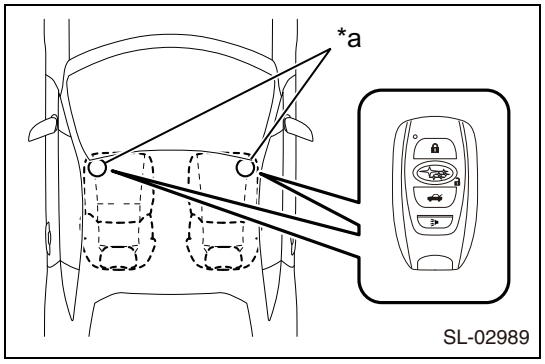

(1) Perform keyless access system check for the following antennas. (Refer to TD - 31)

(a) Check the indoor electrical key antenna ASSY no. 1 (front floor):

Captions in illustration

*a	Inspection point

Check if the wireless door lock buzzer beeps when the electrical key transmitter SUB-ASSY is located at the inspection points.

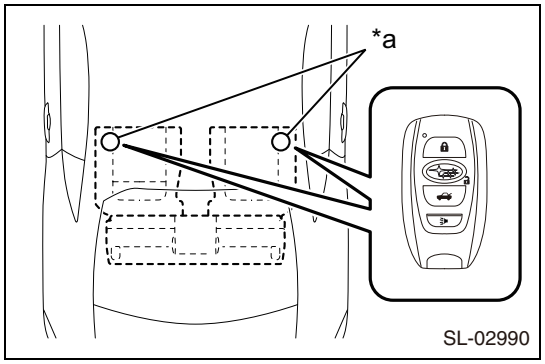

(2) Check the indoor electrical key antenna ASSY no. 2 (rear floor).

Captions in illustration

*a	Inspection point

Check if the wireless door lock buzzer beeps when the electrical key transmitter SUB-ASSY is located at the inspection points.

NOTE:

- If the buzzer beeps, it means that the indoor transmitter is functioning properly.
- You can identify which indoor electrical key antenna ASSY (front floor or rear floor) is functioning properly by checking if the buzzer beeps when the key is near the respective antennas.

- If the buzzer does not go off when the key is near the indoor electrical key antenna ASSY, the circuit inside the collation ECM (smart key ECM ASSY) might be faulty.

Result

Result	Go to
Front side operation failure	A
Rear floor operation failure	B
Front and rear operation check results are OK.	C

B → Go to Step 9.

C → Replacement of the collation ECM (smart key computer ASSY)

A

5	Check the harnesses and connectors (collation ECM (smart key ECM ASSY) - indoor electrical key antenna no. 1 (front floor)).

(1) Disconnect the D41 collation ECM (smart key ECM ASSY) connector.
(2) Disconnect the D26 indoor electrical key antenna ASSY no. 1 (front floor) connector.
(3) Measure the resistance according to the following table.

Resistance

Inspection terminals	Inspection conditions	Standard value
D41-3 (CLG5) - D26-1 (ANTE5)	Always	1 Ωor less
D41-2 (CG5B) - D26-3 (CLGB)	Always	1 Ωor less
D41-3 (CLG5) - chassis ground	Always	10 kΩ or more
D41-2 (CG5B) - chassis ground	Always	10 kΩ or more

NG → Repair or replace the harnesses or connectors.

OK

6	Inspect the collation ECM (smart key ECM ASSY) (output to the electrical key antenna ASSY no. 1 (front floor)).

(1) Reconnect the D41 connector of the collation ECM (smart key ECM ASSY).

TD

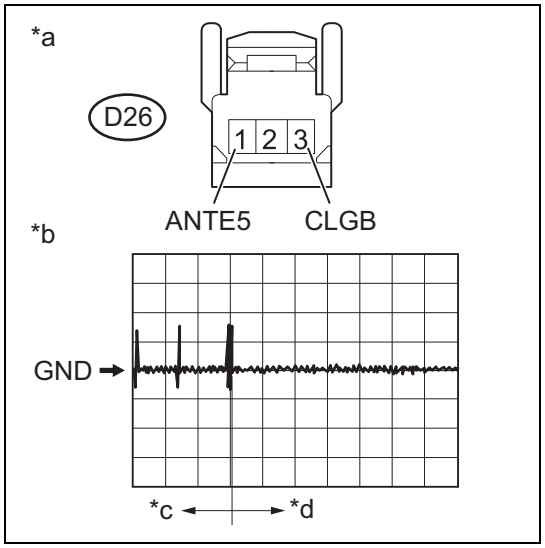

(2) Using an oscilloscope, check the waveform.

Criteria

Inspection terminals	Conditions	Tool setting	Specified condition
D26-1 (ANTE5) - D26-3 (CLGB)	Procedure: 1. The engine switch is OFF. 2. A door is open. 3. A door is closed. 4. 30 seconds elapses. 5. The electrical key transmitter SUB-ASSY is not inside the vehicle.	2 V/DIV., 500 ms/DIV.	Pulse generation (Refer to the waveform)

Captions in illustration

*a	Front side of vehicle wiring harness connector Indoor electrical key antenna ASSY no. 1 (front floor)
*b	Waveform
*c	Door open →within 30 seconds after closing
*d	After 30 seconds from closing the door

NG → Replacement of the collation ECM (smart key computer ASSY)

OK

7	Replace the indoor electrical key antenna ASSY no. 1 (front floor).

(1) Temporarily replace the indoor electrical key antenna ASSY no. 1 (front floor) with a new one or one that functions normally.

Next

8	Perform the keyless access system check.

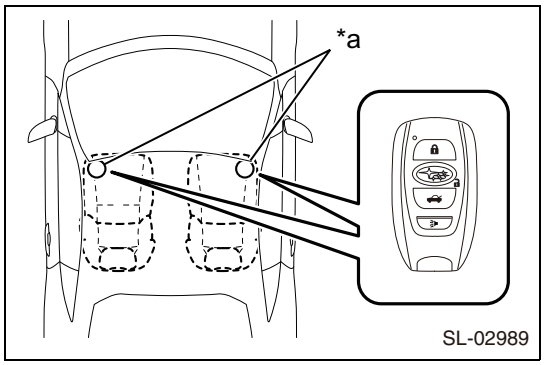

(1) Perform keyless access system check for the following antennas. (Refer to TD - 31)
(2) Check the indoor electrical key antenna ASSY no. 1 (front floor):

Captions in illustration

*a	Inspection point

Check if the wireless door lock buzzer beeps when the electrical key transmitter SUB-ASSY is located at the inspection points.
Criteria: The wireless door lock buzzer beeps.

NG → Replacement of the collation ECM (smart key computer ASSY)

OK

END (indoor electrical key antenna ASSY no. 1 malfunction)

TD

9	Check the harnesses and connectors (collation ECM (smart key ECM ASSY) - indoor electrical key antenna ASSY no. 2).

(1) Disconnect the D40 collation ECM (smart key ECM ASSY) connector.
(2) Disconnect the H15 indoor electrical key antenna ASSY no. 2 (rear floor) connector.
(3) Measure the resistance according to the following table.

Resistance

Inspection terminals	Inspection conditions	Standard value
D40-11 (CLG6) - H15-1 (ANTE6)	Always	1 Ωor less
D40-10 (CG6B) - H15-3 (CLGB)	Always	1 Ωor less
D40-11 (CLG6) - chassis ground	Always	10 kΩ or more
D40-10 (CG6B) - chassis ground	Always	10 kΩ or more

NG → Repair or replace the harnesses or connectors.

OK

10	Inspect the collation ECM (smart key ECM ASSY) (output to the indoor electrical key antenna no. 2).

(1) Reconnect the D40 collation ECM (smart key ECM ASSY) connector.

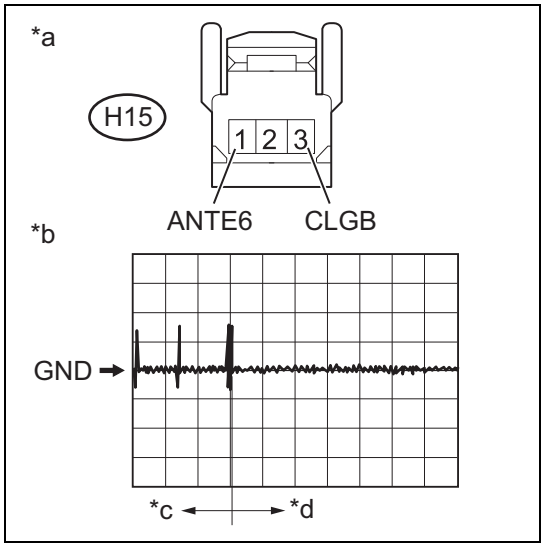

(2) Using an oscilloscope, check the waveform.

Criteria

Inspection terminals	Conditions	Tool setting	Specified condition
H15-1 (ANTE6) - H15-3 (CLGB)	Procedure: 1. The engine switch is OFF. 2. A door is open. 3. A door is closed. 4. 30 seconds elapses. 5. The electrical key transmitter SUB-ASSY is not inside the vehicle.	2 V/DIV., 500 ms/DIV.	Pulse generation (Refer to the waveform)

Captions in illustration

*a	Front side of vehicle wiring harness connector Indoor electrical key antenna ASSY no. 2 (rear floor)
*b	Waveform
*c	Door open →within 30 seconds after closing
*d	After 30 seconds from closing the door

NG → Replacement of the collation ECM (smart key computer ASSY)

OK

11	Replace the indoor electrical key antenna ASSY no. 2 (rear floor).

(1) Temporarily replace the indoor electrical key antenna ASSY no. 2 (rear floor) with a new one or one that functions normally.

Next

12	Perform the keyless access system check.

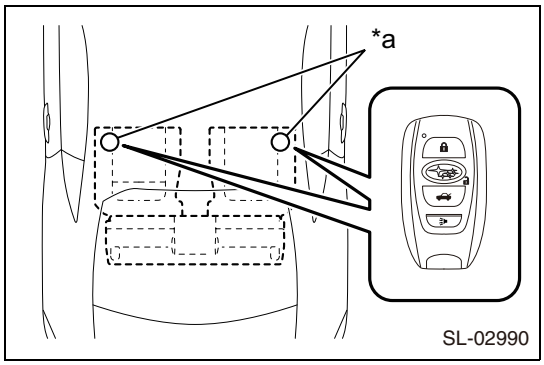

(1) Perform keyless access system check for the following antennas. (Refer to TD - 31)
  (a) Check the indoor electrical key antenna ASSY no. 2 (rear floor).

Captions in illustration

*a	Inspection point

Check if the wireless door lock buzzer beeps when the electrical key transmitter SUB-ASSY is located at the inspection points.
Criteria: The wireless door lock buzzer beeps.

NG → Replacement of the collation ECM (smart key computer ASSY)

OK

END (indoor electrical key antenna ASSY no. 2 malfunction)

TD

Smart trunk open operation does not work (when the transmitter is located outside trunk)

Circuit description

If the trunk entry unlock function does not work, a request code might not be transmitted from the trunk. If the entry function works properly on other doors, the electrical key transmitter SUB-ASSY and the door control receiver are functioning properly. It can therefore be assumed that something is wrong with the transmission of a request code (communication between the collation ECM (smart key ECM ASSY) and the electrical key antenna (trunk exterior antenna)), that the switch located outside the trunk is faulty, or that interference from external radio waves is present.

Circuit figure

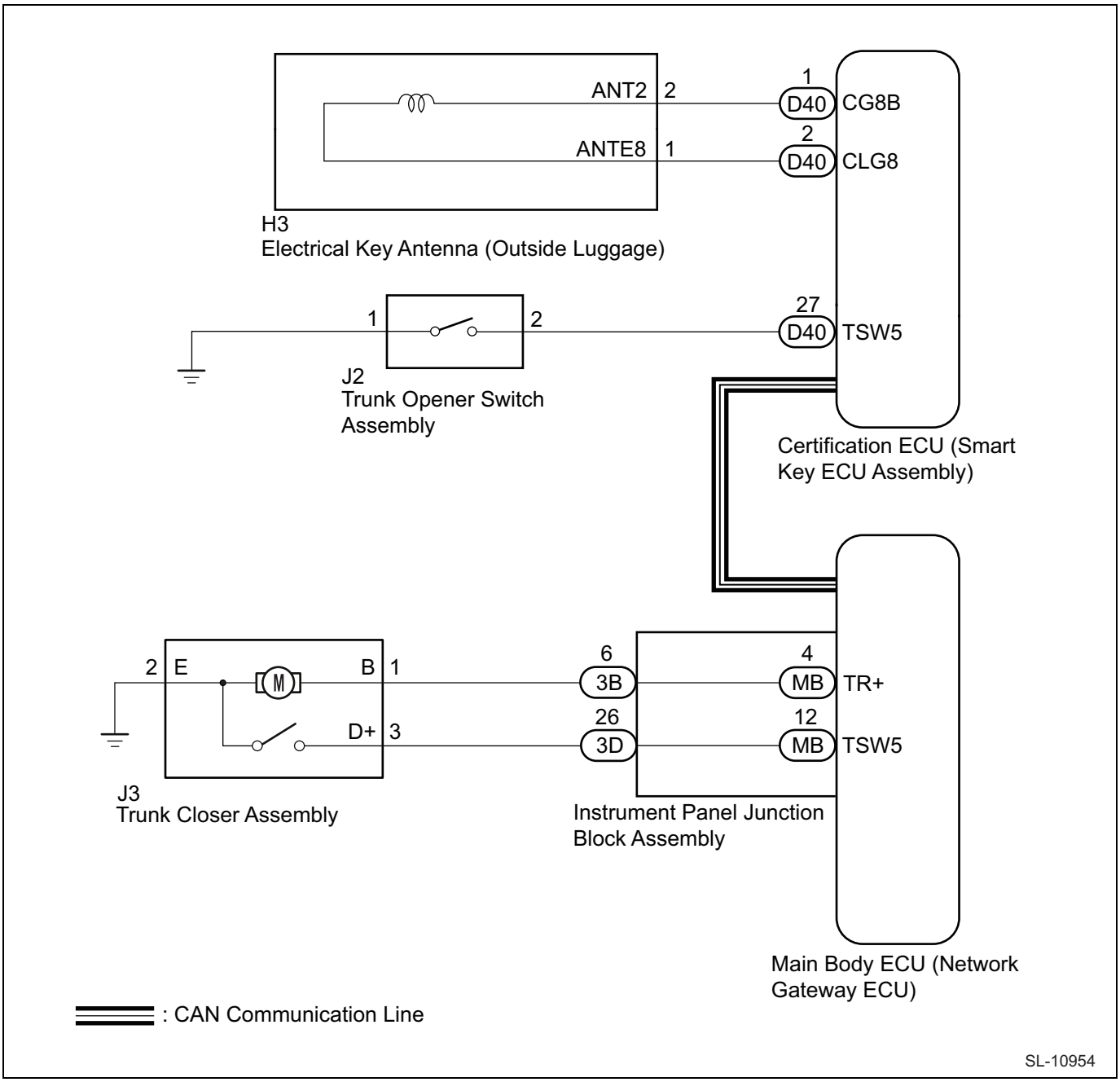

Inspection steps

CAUTION:

- Some functions of the smart entry & start system (entry function) use the CAN communication system and the LIN communication system. Inspect the communication function first by referring to "How to troubleshoot" (refer to TD - 27). Confirm that the communication system is functioning properly before proceeding to repair the smart entry & start system (entry function).
- Check if the electrical key transmitter SUB-ASSY is inside the vehicle.
- Before proceeding with the inspection procedure, check that the DTC B1242 (wireless door lock control) is not output. (Refer to TD - 52)
- Refer to the notes provided under "Smart entry & start system (entry function)" before proceeding to replace the collation ECM (smart key ECM ASSY). (Refer to TD - 5)
- After the repair work is complete, perform the "DTC output check operation" to confirm that the diagnostic code is not output again.

1	Read numerical values using the SSM4.

(1) Connect the SSM4 to the DLC3.

(2) Turn the ignition switch to ON.
(3) Turn on the SSM4.
(4) Enter the following menu items: [Keyless Access(Collation ECM)] →[Customize]
(5) Based on the contents of the SSM4 display, read the [Data monitor].

Entry & Start

Tester display	Measurement items / range	Normal condition	Notes for diagnosis
[Trunk Open Mode]	Trunk opening switch ASSY/ [OFF] or [ON]	Customization status is displayed.	-

Result

Result	Go to
The entry trunk open mode is ON.	A
The entry trunk open mode is OFF.	B

B → Specify the customize setting (go to "customize function") (refer to TD - 37).

A

TD

2	Read numerical values using the SSM4.

(1) Connect the SSM4 to the DLC3.
(2) Turn the ignition switch to ON.
(3) Turn on the SSM4.
(4) Enter the following menu items: [Keyless Access(Collation ECM)] →[Customize]
(5) Based on the contents of the SSM4 display, read the [Data monitor].

Entry & Start

Tester display	Measurement items / range	Normal condition	Notes for diagnosis
[Trunk lid/ Rear gate unlock SW]	Trunk opening switch ASSY/ [OFF] or [ON]	ON: The trunk opening switch ASSY is pressed. OFF: The trunk door opening switch ASSY is not pressed.	-

Criteria: The monitor changes as you operate the trunk opening switch ASSY.

NG → Go to Step 8.

OK

3	Using SSM4, perform an [Active Test].

(1) Connect the SSM4 to the DLC3.
(2) Turn the ignition switch to ON.
(3) Turn on the SSM4.
(4) Input the following menus: [Body Control] →[Active Test]
(5) Based on the contents of the SSM4 display, read the [Data monitor].

Main body

Tester display	Tested parts	Control range	Notes for diagnosis
[Trunk and Back-Door Open]	Operate the trunk lock motor.	ON/OFF	-

Criteria: The trunk opens.

NG → Go to Step 10.

OK

4	Checking the waveform environment

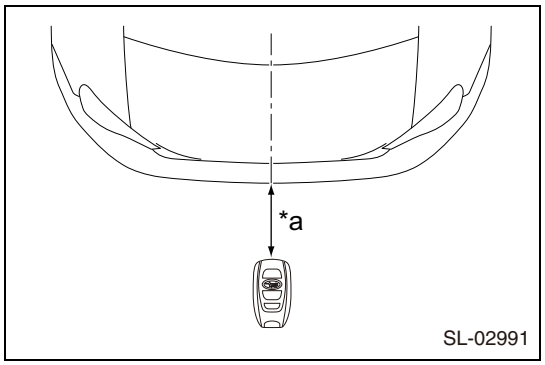

(1) Move the electrical key transmitter SUB-ASSY toward the electrical key antenna (trunk exterior antenna) and check the entry trunk open function.

Captions in illustration

*a	Approx. 0.3 m

CAUTION:
If the electrical key transmitter SUB-ASSY is within 0.2m of the rear bumper, communication is not possible.
NOTE:

- Press the switch located outside the trunk opener, holding the electrical key transmitter SUB-ASSY approximately 1 m above ground and approximately 0.3 m away from the vehicle, as shown in the figure.
- Try moving the electrical key transmitter SUB-ASSY closer to the electrical key antenna (trunk exterior antenna), so that it is less likely to be affected by interference from external radio waves. In this way, you can identify if the problem is caused by external radio waves or not.
- If the operation check reveals a normal result, it is highly likely that the problem is caused by the effect of electromagnetic interference. In addition, installing an additional component to the vehicle makes the vehicle more susceptible to interference from external radio waves. If such components are found, remove them, and then proceed to check the operation.
  Criteria: The entry function works properly.

NG → Go to Step 5.

OK

Interference from external radio waves

5	Perform the keyless access system check.

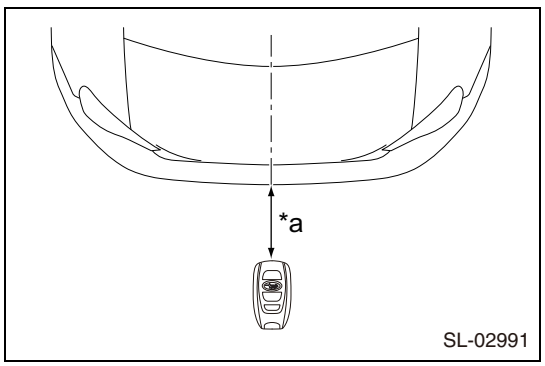

(1) Perform keyless access system check for the following antennas. (Refer to TD - 31)
  (a) Check the indoor electrical key antenna ASSY no. 2 (rear floor).

Captions in illustration

*a	0.7 - 1.0m

(2) Hold the electrical key transmitter SUB-ASSY at the same level as the upper surface of the rear bumper, positioning it at the center of the rear end of the vehicle. Check if the wireless door lock buzzer beeps.
NOTE:

- Hold the electrical key transmitter SUB-ASSY at the same level as the upper surface of the rear bumper, positioning it at the center of the rear end of the vehicle (0.7 - 1.0 m (2.30 - 3.28 feet)). Check

that the electrical key transmitter SUB-ASSY is facing in the same direction as shown in the figure.

- If the buzzer beeps, it means that the transmitter located outside the trunk is functioning properly.
  Criteria: The wireless door lock buzzer beeps.

NG → Go to Step 6.

OK

Replacement of the collation ECM (smart key computer ASSY)

6	Check the harnesses and connectors (collation ECM - electrical key antenna).

(1) Disconnect the D40 collation ECM (smart key ECM ASSY) connector.
(2) Disconnect the H3 electrical key antenna (trunk exterior antenna) connector.
(3) Measure the resistance according to the following table.

Resistance

Inspection terminals	Inspection conditions	Standard value
D40-1 (CG8B) - H3-2 (ANTE2)	Always	1 Ωor less
D40-2 (CLG8) - H3-1 (ANTE1)	Always	1 Ωor less
D40-1 (CG8B) - chassis ground	Always	10 kΩ or more
D40-2 (CLG8) - chassis ground	Always	10 kΩ or more

NG → Repair or replace the harnesses or connectors.

OK

7	Inspect the electrical key antenna (trunk exterior antenna) unit.

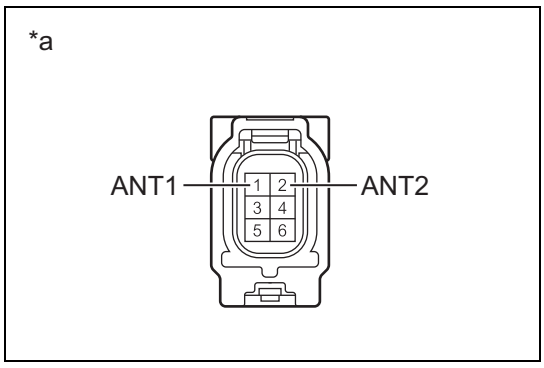

(1) Remove the electrical key antenna (trunk exterior antenna).
(2) Measure the resistance according to the following table.
Resistance

Inspection terminals	Inspection conditions	Standard value
1 (ANTE8) - 2 (ANT2)	Always	1 Ωor less

Captions in illustration

*a	Connector not connected (Electrical key antenna (trunk exterior antenna))

NG → Replace the electrical key antenna (trunk exterior antenna).

OK

Replacement of the collation ECM (smart key computer ASSY)

8	Inspect the trunk opening switch ASSY unit.

(1) Remove the trunk opening switch ASSY. (Refer to DH - 68)
(2) Inspect the trunk opening switch ASSY. (Refer to DH - 69)

NG → Replacement of the trunk opening switch ASSY

OK

9	Check the harnesses and connectors (collation ECM - trunk opening switch ASSY).

(1) Disconnect the D40 collation ECM (smart key ECM ASSY) connector.
(2) Remove the J2 trunk opening switch ASSY connector.
(3) Measure the resistance according to the following table.

Resistance

Inspection terminals	Inspection conditions	Standard value
D40-27 (TSW5) - J2-2	Always	1 Ωor less
J2-1 - chassis ground	Always	1 Ωor less
D40-27 (TSW5) - chassis ground	Always	10 kΩ or more

NG → Repair or replace the harnesses or connectors.

OK

Replacement of the collation ECM (smart key computer ASSY)

10	Inspect the trunk lock ASSY unit.

(1) Remove the trunk lock ASSY. (Refer to DL - 105)
(2) Inspect the trunk lock ASSY. (Refer to DL - 108)

NG → Replacement of the trunk lock ASSY

OK

11	Check the harnesses and connectors (trunk lock - instrument panel junction block).

(1) Disconnect the 3B and 3D instrument panel junction block ASSY connectors.
(2) Disconnect the J3 trunk lock ASSY connector.
(3) Measure the resistance according to the following table.

Resistance

Inspection terminals	Inspection conditions	Standard value
3B-6 - J3-1	Always	1 Ωor less
3D-26 -J3-3	Always	1 Ωor less
J3-2 - chassis ground	Always	1 Ωor less
3B-6 - chassis ground	Always	10 kΩ or more
3D-26 - chassis ground	Always	10 kΩ or more

NG → Repair or replace the harnesses or connectors.

OK

12	Inspect the instrument panel junction block ASSY unit.

(1) Remove the instrument panel junction block ASSY.
(2) Remove the main body ECM (multiplex network body ECM) from the instrument panel junction block ASSY.
(3) Measure the resistance according to the following table.

Resistance

Inspection terminals	Conditions	Specified condition
3B-6 - MB-4	Always	1 Ωor less
3D-26 - MB-12	Always	1 Ωor less

NG → Replacement of the instrument panel junction block ASSY

OK

Replace the main body ECM (multiplex network body ECM).

The smart key lockout protection function for the trunk does not work (trunk does not open)

Circuit description

If the entry trunk compartment lock-in prevention function does not work, communication between the indoor electrical key antenna ASSY no. 3 (trunk interior antenna) and the electrical key transmitter SUB-ASSY might be faulty, interference from external radio waves might be present, or the collation ECM (smart key ECM ASSY) might be faulty.

Circuit figure

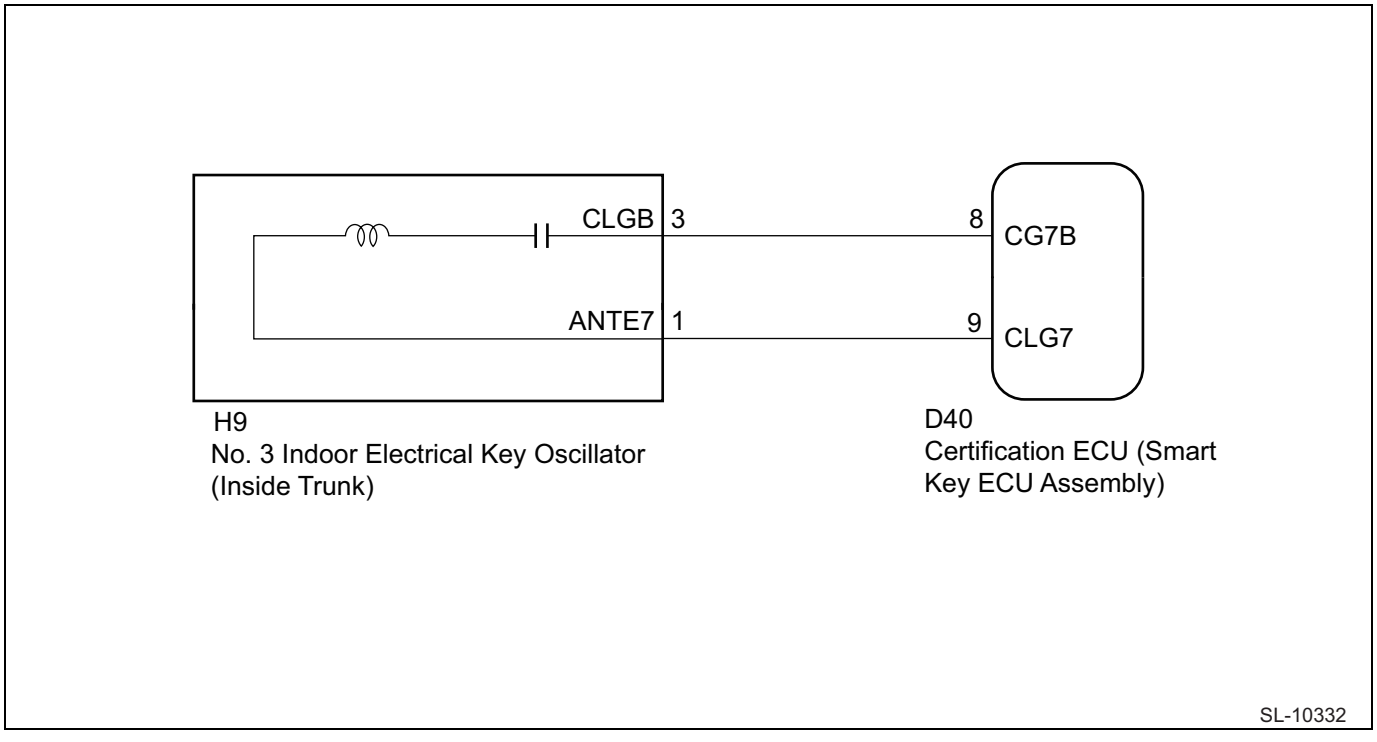

Inspection steps

CAUTION:

- Some functions of the smart entry & start system (entry function) use the CAN communication system and the LIN communication system. Inspect the communication function first by referring to "How to troubleshoot" (refer to TD - 27). Confirm that the communication system is functioning properly before proceeding to repair the smart entry & start system (entry function).
- Check if the electrical key transmitter SUB-ASSY is inside the vehicle.
- Before proceeding with the inspection procedure, check that the DTC B1242 (wireless door lock control) is not output. (Refer to TD - 52)
- Refer to the notes provided under "Smart entry & start system (entry function)" before proceeding to replace the collation ECM (smart key ECM ASSY). (Refer to TD - 5)
- After the repair work is complete, perform the "DTC output check operation" to confirm that the diagnostic code is not output again.

1	Check the entry function (entry trunk open function).

(1) Check if the entry trunk open function works properly. (Refer to TD - 31)

Result

Result	Go to
The entry trunk open function works properly.	A
The entry trunk open function does not work properly.	B

B → Proceed to check other problems ("Symptom table") (refer to TD - 39).

A

2	Checking the waveform environment

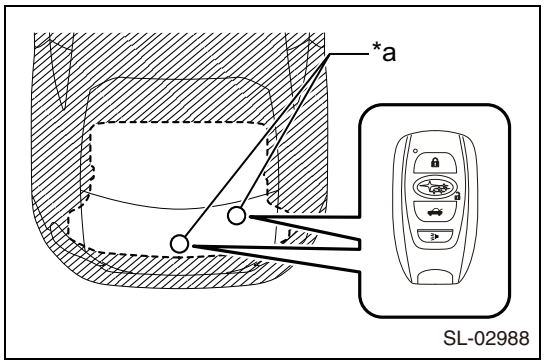

(1) Move the electrical key transmitter SUB-ASSY toward the indoor electrical key antenna ASSY no. 3 (trunk interior antenna) and check if the entry trunk compartment lock-in prevention function works.

Captions in illustration

*a	Inspection point

CAUTION:

If the electrical key transmitter SUB-ASSY is within 0.2 m (0.656 feet) of the indoor electrical key antenna ASSY no. 3 (rear floor), communication is not possible.

NOTE:

- Try moving the electrical key transmitter SUB-ASSY closer to the indoor electrical key antenna ASSY no. 3 (trunk interior antenna), so that it is less likely to be affected by interference from external radio waves. In this way, you can identify if the problem is caused by electromagnetic interference.
- If the operation check reveals a normal result, it is highly likely that the problem is caused by the effect of electromagnetic interference. In addition, installing an additional component to the vehicle makes the vehicle more susceptible to interference from external radio waves. If such components are found, remove them, and then proceed to check the operation.

  Criteria: The entry function works properly.

NG → Go to Step 3.

OK

Interference from external radio waves

3	Perform the keyless access system check.

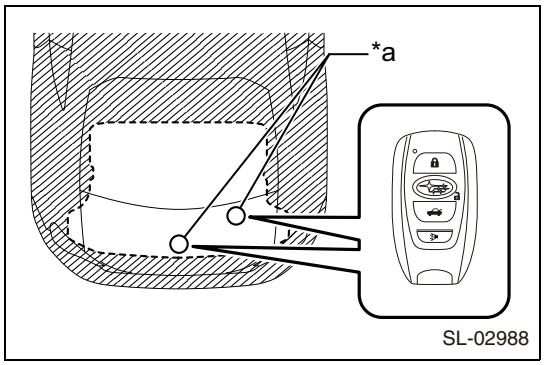

(1) Perform keyless access system check for the following antennas. (Refer to TD - 31)

Captions in illustration

*a	Inspection point

(2) Check if the wireless door lock buzzer beeps when the electrical key transmitter SUB-ASSY is located in the trunk.

NOTE:

- Place the key in the trunk.
- If the buzzer beeps, it means that the indoor electrical key antenna ASSY no. 3 (located inside the trunk) is functioning properly.

Criteria: The wireless door lock buzzer beeps.

NG → Go to Step 4.

OK

Replacement of the collation ECM (smart key computer ASSY)

4	Check the harnesses and connectors (collation ECM - indoor electrical key antenna no. 3).

(1) Disconnect the D40 collation ECM (smart key ECM ASSY) connector.
(2) Disconnect the H9 indoor electrical key antenna ASSY no. 3 (trunk interior antenna) connector.
(3) Measure the resistance according to the following table.

Resistance

Inspection terminals	Inspection conditions	Standard value
D40-9 (CLG7) - H9-1 (ANTE7)	Always	1 Ωor less
D40-8 (CG7B) - H9-3 (CLGB)	Always	1 Ωor less
D40-9 (CLG7) - chassis ground	Always	10 kΩ or more
D40-8 (CG7B) - Chassis ground	Always	10 kΩ or more

NG → Repair or replace the harnesses or connectors.

OK

TD

5	Check the collation ECM (smart key ECM ASSY).

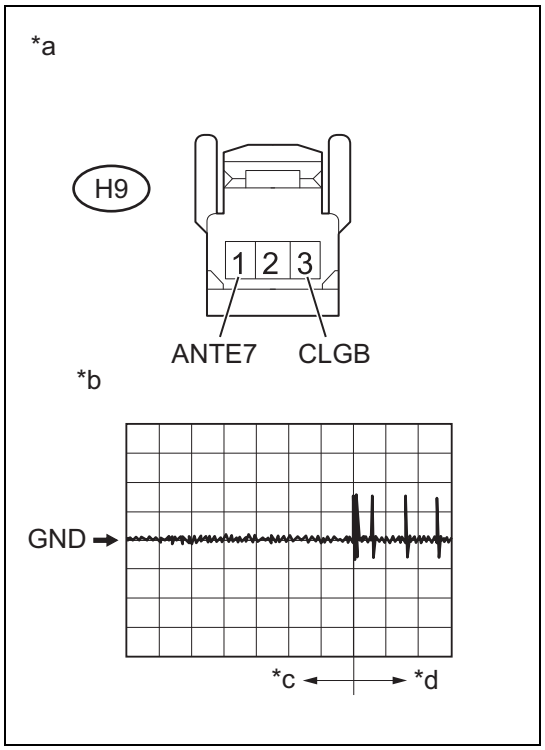

(1) Connect the D40 collation ECM (smart key ECM ASSY) connector.
(2) Disconnect the H9 indoor electrical key antenna ASSY no. 3 (trunk interior antenna) connector.
(3) Measure the voltage according to the following table.

Criteria

Inspection terminals	Switch conditions	Tool setting	Specified condition
H9-1 (ANTE7) - H9-3 (CLGB)	Procedure: 1.The engine switch is OFF. 2.The electrical key transmitter SUB-ASSY is not inside the vehicle. 3.All doors are closed. 4.Driver's door lock sensor, not touched →touched	2 V/DIV., 500 ms/DIV.	Pulse generation (Refer to the waveform)

Captions in illustration

*a	Front side of vehicle wiring harness connector (Indoor electrical key antenna ASSY no. 3 (trunk interior antenna))
*b	Waveform
*c	The driver's side lock sensor is not touched.
*d	The driver's side lock sensor is touched.

NG → Replacement of the collation ECM (smart key computer ASSY)

OK

6	Replacement of the indoor electrical key antenna ASSY no. 3 (trunk interior antenna)

(1) Replace the indoor electrical key antenna ASSY no. 3 (trunk interior antenna). (Refer to TD - 335)

Next

7	Check the indoor electrical key antenna ASSY no. 3 (trunk interior antenna).

(1) Check if the entry trunk lock-in prevention function works properly.
Criteria: The trunk lock-in prevention function works properly.

NG → Replacement of the collation ECM (smart key computer ASSY)

OK

END (indoor electrical key antenna ASSY no. 3 malfunction)

The internal alarm of the smart entry system does not go off

Circuit description

The entry & start system (entry function) provides various indoor warnings by setting off a buzzer via the combination meter ASSY. When the specific conditions for each waning are met, the collation ECM (smart key ECM ASSY) sends a buzzer drive request signal to the combination meter ASSY via the CAN communication to beep the buzzer.

Inspection steps

CAUTION:

- Some functions of the entry & start system (entry function) use the LIN communication system and the CAN communication system. Inspect the communication function by referring to "How to troubleshoot" (refer to TD - 27). Confirm that the communication system is functioning properly before proceeding to repair the entry & start system (entry function).
- Refer to "Entry & start system (entry function)" before proceeding to replace the collation ECM (smart key ECM ASSY). (Refer to TD - 5)

TD

1	Check the entry door lock operation.

(1) Check if the entry function works properly. (Refer to TD - 31)

Criteria: The entry function works properly.

NG → Go to "Symptom table" (refer to TD - 39).

OK

Go to "Meter & gauge system" ("Symptom table").

Entry & start system (start function)

Parts location

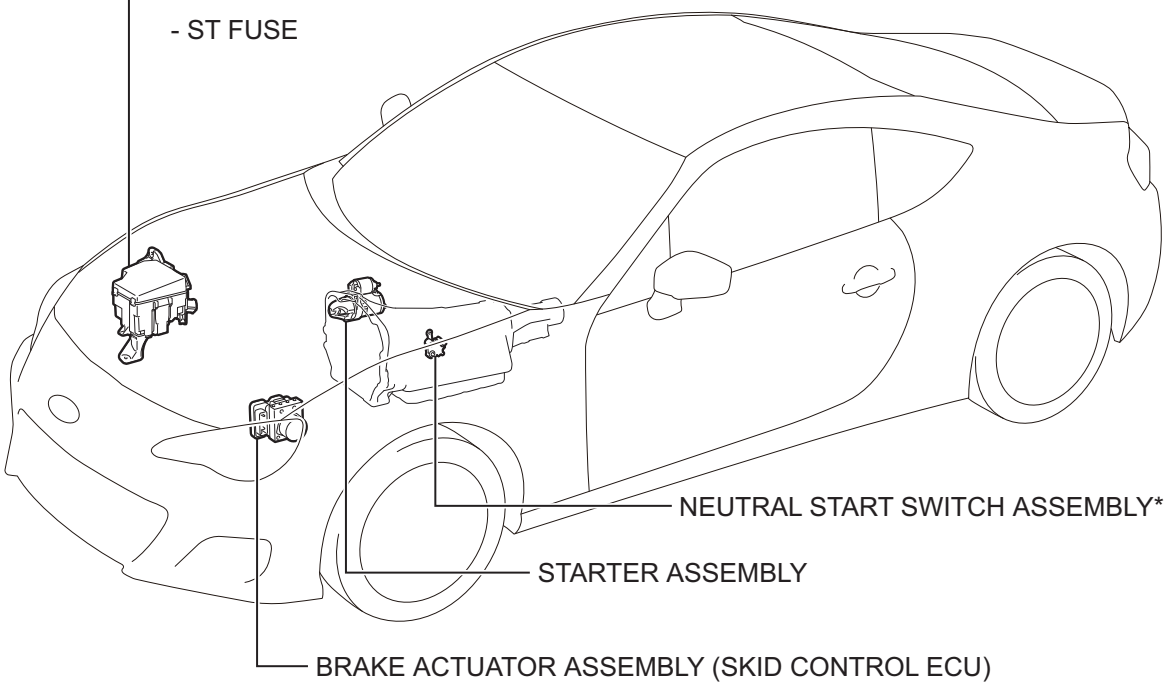

*: for Automatic Transmission

SL-01967

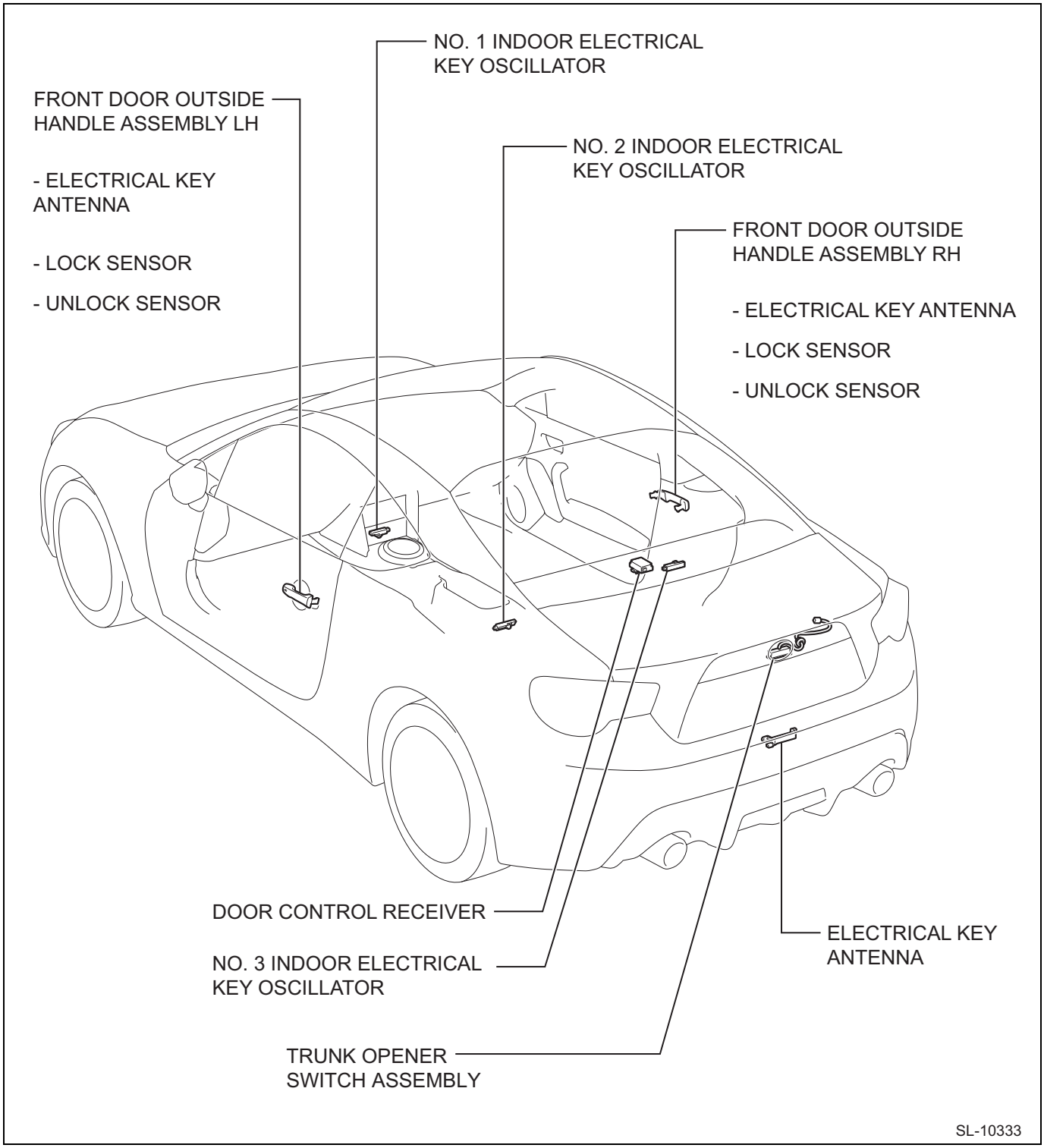
NO. 1 INDOOR ELECTRICAL KEY OSCILLATOR
FRONT DOOR OUTSIDE HANDLE ASSEMBLY LH
- ELECTRICAL KEY ANTENNA
- LOCK SENSOR
- UNLOCK SENSOR
NO. 2 INDOOR ELECTRICAL KEY OSCILLATOR
FRONT DOOR OUTSIDE HANDLE ASSEMBLY RH
- ELECTRICAL KEY ANTENNA
- LOCK SENSOR
- UNLOCK SENSOR
DOOR CONTROL RECEIVER
NO. 3 INDOOR ELECTRICAL KEY OSCILLATOR
TRUNK OPENER SWITCH ASSEMBLY
ELECTRICAL KEY ANTENNA
SL-10333

TD

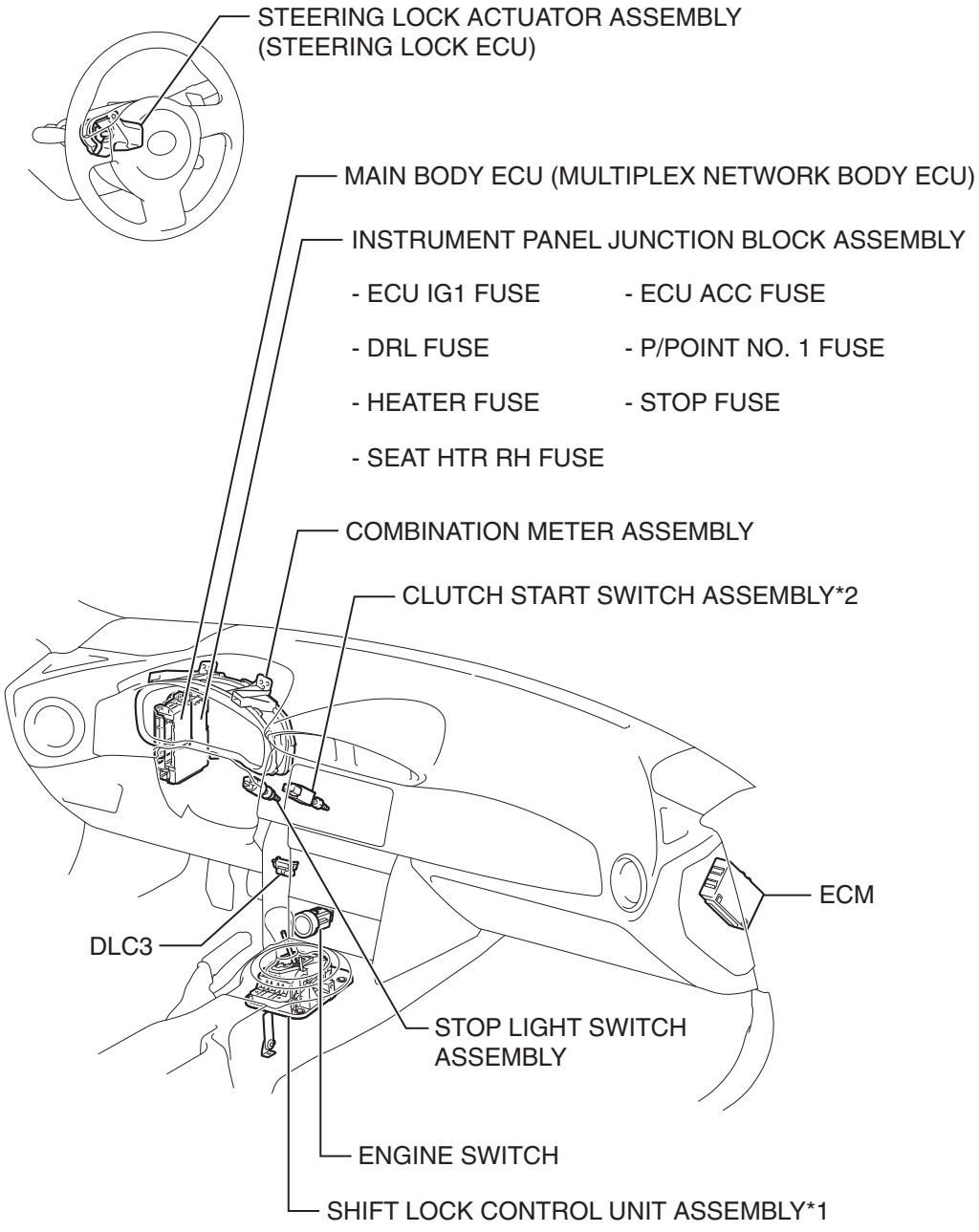

*1: for Automatic Transmission * 2: for Manual Transmission



ID CODE BOX (IMMOBILISER CODE ECU)*

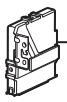

CERTIFICATION ECU (SMART KEY ECU ASSEMBLY)

REFER TO THE “REGISTRATION MANUAL FOR IMMOBILIZER” FOR ATTACHMENT POSITION.

*: w/ ID Code Box

SL-02063

Circuit figure

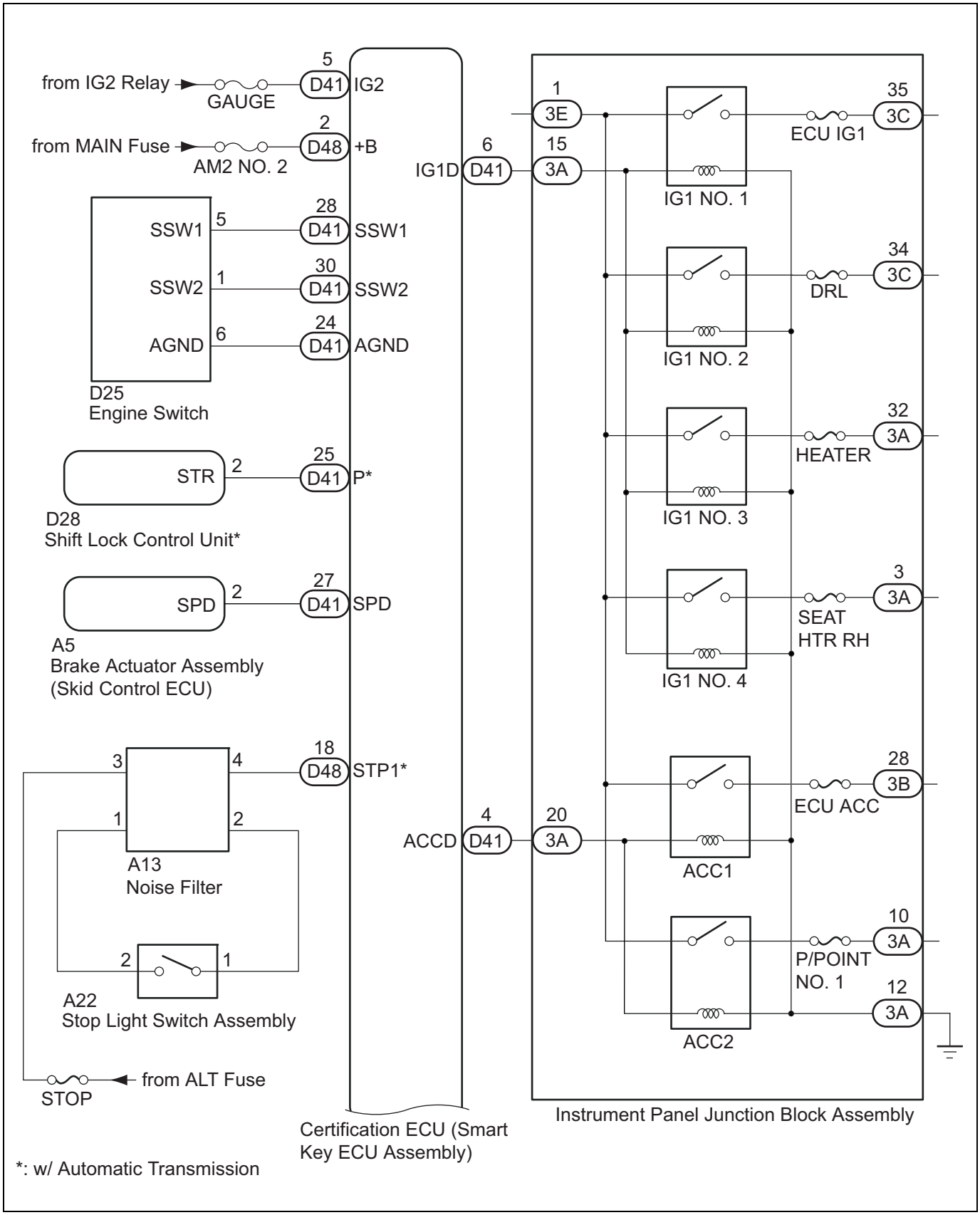

TD

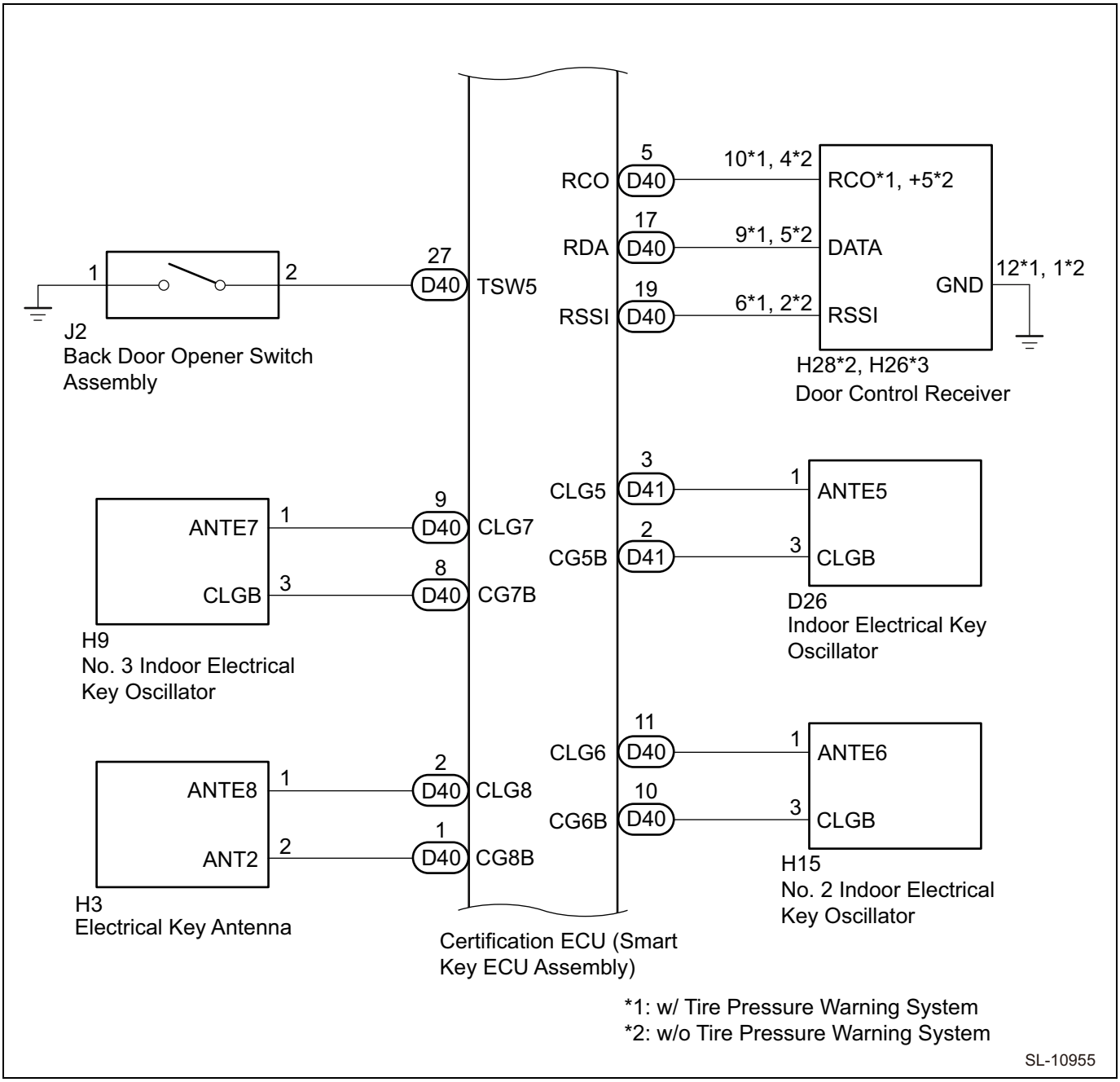
RCO
5
D40
10*1, 4*2
RCO*1, +5*2
RDA
17
D40
9*1, 5*2
DATA
GND
12*1, 1*2
RSSI
19
D40
6*1, 2*2
RSSI
H28*2, H26*3
Door Control Receiver
1
2
27
D40
TSW5
J2
Back Door Opener Switch Assembly
CLG5
3
D41
1
ANTE5
CG5B
2
D41
3
CLGB
D26
Indoor Electrical Key Oscillator
ANTE7
1
9
D40
CLG7
CLGB
3
8
D40
CG7B
H9
No. 3 Indoor Electrical Key Oscillator
CLG6
11
D40
1
ANTE6
CG6B
10
D40
3
CLGB
H15
No. 2 Indoor Electrical Key Oscillator
ANTE8
1
2
D40
CLG8
ANT2
2
1
D40
CG8B
H3
Electrical Key Antenna
Certification ECU (Smart Key ECU Assembly)
*1: w/ Tire Pressure Warning System
*2: w/o Tire Pressure Warning System
SL-10955

TD

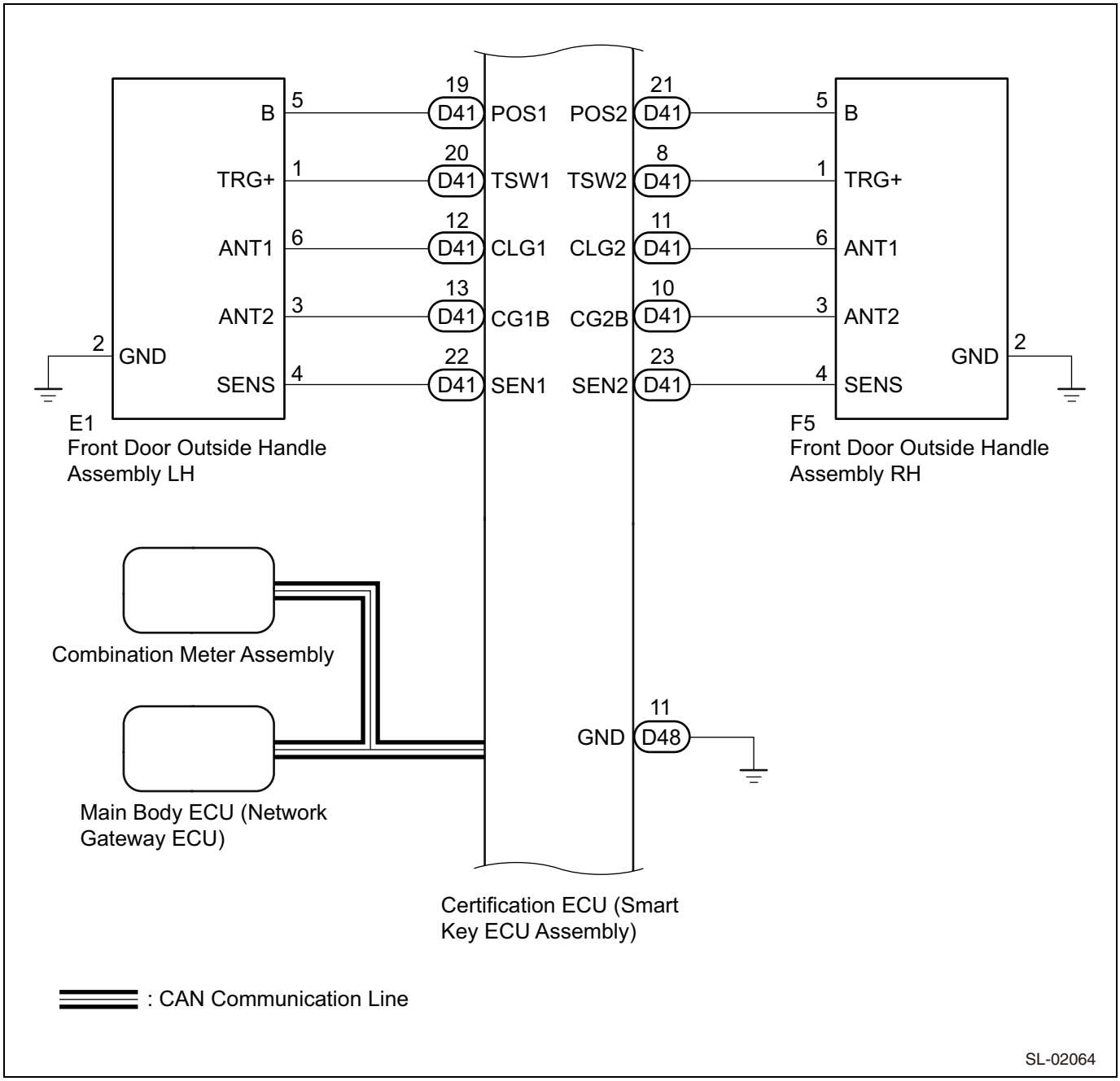
B
TRG+
ANT1
ANT2
GND
SENS
5
1
6
3
2
4
E1
Front Door Outside Handle Assembly LH
19
20
12
13
22
D41
POS1
TSW1
CLG1
CG1B
SEN1
21
8
11
10
23
POS2
TSW2
CLG2
CG2B
SEN2
F5
Front Door Outside Handle Assembly RH
Combination Meter Assembly
Main Body ECU (Network Gateway ECU)
11
D48
GND
Certification ECU (Smart Key ECU Assembly)
: CAN Communication Line
SL-02064

TD

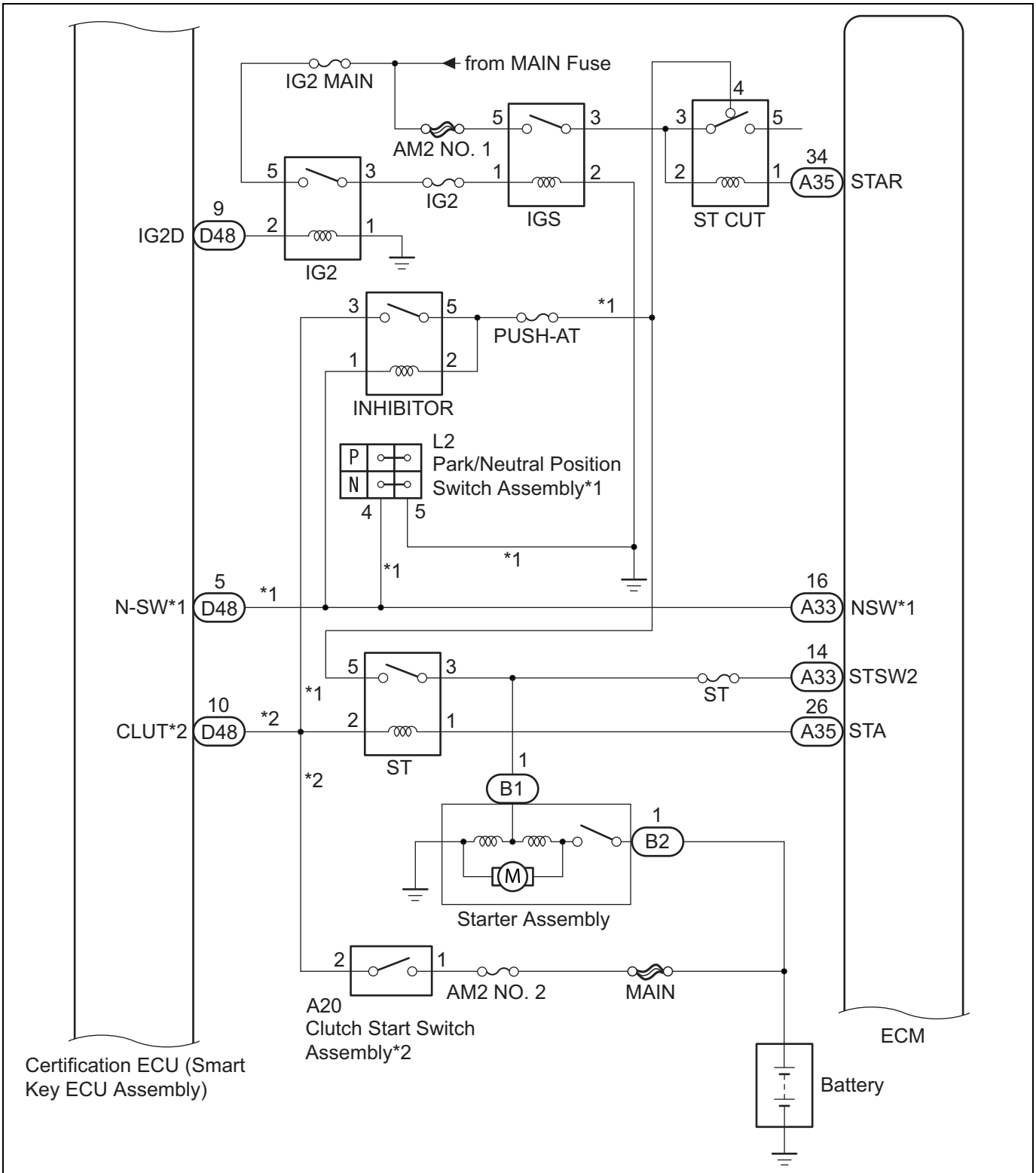

*1: for Automatic Transmission

*2: for Manual Transmission

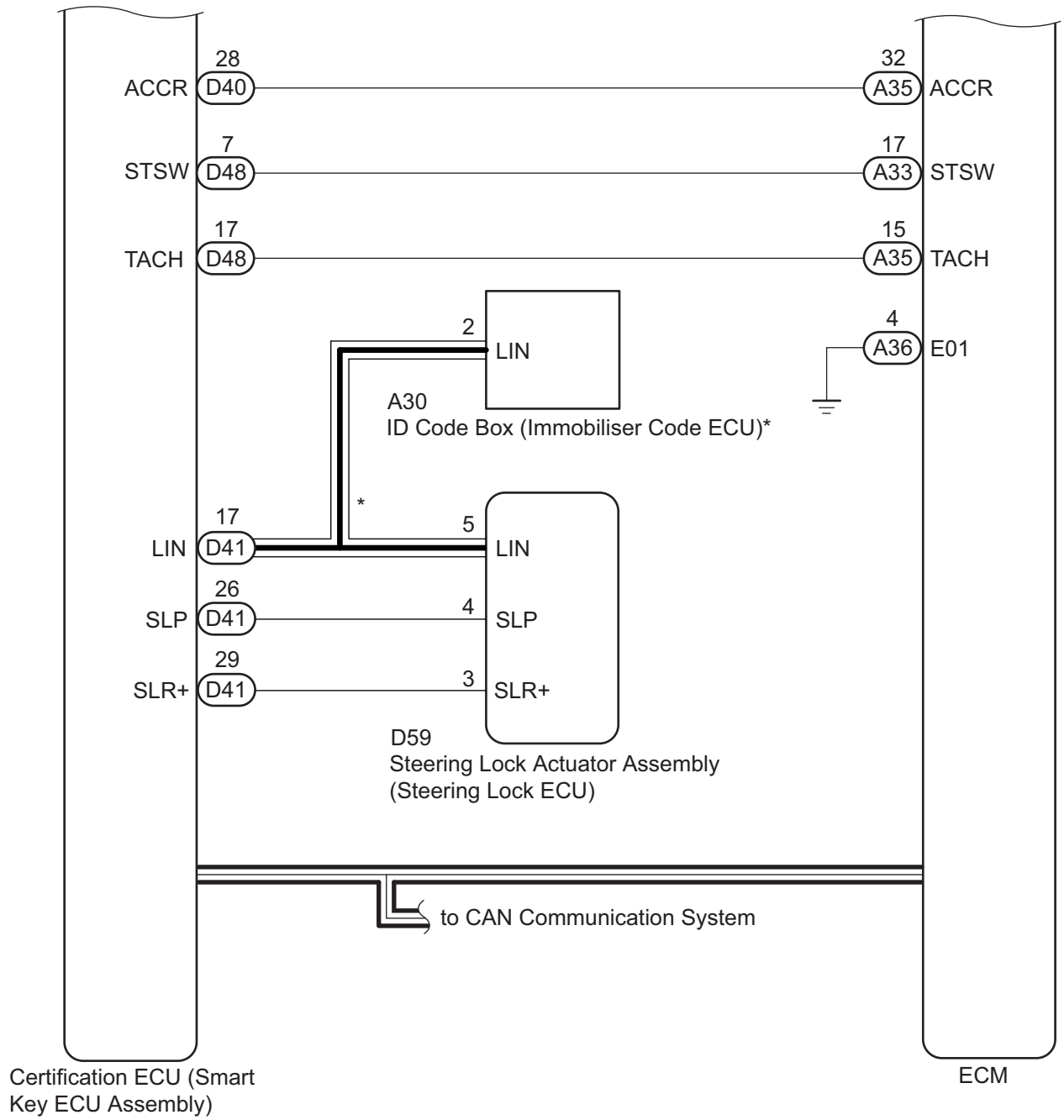

*: w/ ID Code Box

: CAN Communication Line : LIN Communication Line

Parts	Procedures
Engine switch	• Turns on the power and starts the engine. • Includes a built-in transponder key amplifier so that you can start the engine in cases when, due to the battery being drained or radio wave interference, the key doesn't operate properly.

Parts	Procedures
Collation ECM (smart key ECM ASSY)	• Performs key verification. • Controls the electrical key antenna (vehicle exterior), the electrical key antenna (vehicle interior), and the door lock / unlock sensor. • Receives the trunk open signal from the trunk opening switch ASSY, and outputs a signal to the main body ECM through the CAN communication system. • Outputs the entry door lock / unlock command. • Outputs the lock / unlock command signal to the steering lock actuator ASSY. • Outputs the immobilizer set / unset command. • Controls the security indicator light. • Controls the entry key indicator light of the combination meter ASSY. • Drives the ACC and IG relay, and switches the power source mode. • Forms the entry detection area.
ID code box (immobilizer code ECM) *1	• Receives commands from the collation ECM (smart key ECM ASSY), and outputs the immobilizer set / unset commands to the ECM. • Records the confirmation code.
ECM	When starting the engine, outputs the signal notifying that the engine started the collation ECM (smart key ECM ASSY). • Drives the starter relay, and starts the engine.
Steering lock actuator ASSY (steering lock ECM)	• Receives command signals from the collation ECM (smart key ECM ASSY) and activates the steering lock actuator ASSY. • Records the confirmation code.
Combination meter ASSY	• Based on the command signals sent from the collation ECM (smart key ECM ASSY), operates various warnings (sounding buzzers on the combination meter). • Informs the customer if any problem is found in the entry & start system.
Brake actuator ASSY (skid control ECM)	Outputs the vehicle speed signal to the collation ECM (smart key ECM ASSY).
IG, ACC relay	Following the control of the collation ECM (smart key ECM ASSY), switches between On / Off, and supplies power to each system.
Stop light switch ASSY *2	Detects if the brake pedal is being depressed (switch on), and outputs a signal to the collation ECM (smart key ECM ASSY).
Clutch starter switch ASSY *3	Detects if the clutch pedal is being depressed (switch on), and outputs a signal to the collation ECM (smart key ECM ASSY).
Neutral start switch ASSY *2	Outputs the shift position to the collation ECM (smart key ECM ASSY).
Transmission control ECM *2	Outputs the transmission control ECM signal to the collation ECM (smart key ECM ASSY).
No. 1 vehicle interior electrical key antenna ASSY (front floor) No. 2 vehicle interior electrical key antenna ASSY (rear floor)	Receive request signals from the collation ECM (smart key ECM ASSY), and form the vehicle interior detection area.
Door control receiver	Receives the entry & start system code / wireless code sent from the key, and sends that to the collation ECM (smart key ECM ASSY).
Electrical key transmitter	Sends the ID code when it receives a request signal.

*1: With ID code box

*2: With automatic transmission

*3: for manual transmission

Description of functions

1. Notes for registration
   (1) When replacing any of the following parts, refer to the "Registration manual for immobilizer".
   CAUTION:
   • When replacing the collation ECM (smart key ECM ASSY), it is also necessary to prepare all the registered electrical key transmitter SUB-ASSYs.
   • It is not possible to use a registered electrical key transmitter SUB-ASSY or ECM in a different vehicle.
   (a)ID code box (immobilizer code ECM) *1
   (b)Collation ECM (smart key ECM ASSY)
   (c)ECM
   (d)Steering lock actuator ASSY (steering lock ECM)
   (e)Electrical key transmitter SUB-ASSY

*: The ID code box is included.

2. System functions

The push button start functions are described below:

Function	Procedures
Ignition function	When the electrical key transmitter SUB-ASSY is confirmed to be in the vehicle interior, and the engine switch and brake pedal *1 or clutch pedal *2 are operated, the ignition function changes the power or starts the engine.
Vehicle battery power saving function	When not using the vehicle for long periods of time, this function extends the interval for the periodic sending of request signals or stops the sending of request signals, and saves the vehicle's battery power. • If 5 days pass without a response from the electrical key transmitter SUB-ASSY, the periodic sending of signals is stopped. • If 14 days pass without a response from the electrical key transmitter SUB-ASSY, the lock / unlock sensors of all the door outside handle ASSYs except for the driver side door are disabled. If 10 minutes or more pass with the electrical key transmitter SUB-ASSY inside the detection area, the entry & start system will automatically disable the vehicle exterior detection area where the electrical key transmitter SUB-ASSY is.
Electrical key transmitter SUB-ASSY battery power saving function	If you press the switch on the electrical key transmitter SUB-ASSY, this function stops the sending of signals approx. 20 seconds later, and saves the power consumed by the electrical key transmitter SUB-ASSY.
Entry cancel function	Cancels the entry & start system when certain operations are performed.
Immobilizer function	Because the engine is only started by the registered electrical key transmitter SUB-ASSY, this prevents unauthorized people from starting the engine.
Automatic power OFF function	With automatic transmission If the vehicle is left for 20 minutes or more with the shift lever in P and ACC ON, the power automatically turns off. If the vehicle is left for 60 minutes or more with the shift lever in P and IG ON (with the engine not started, or the vehicle stopped), the power automatically turns off. With manual transmission If the vehicle is left for 20 minutes or more with ACC ON, the power automatically turns off. If the vehicle is left for 60 minutes or more with IG ON (with the engine not started, or the vehicle stopped), the power automatically turns off.

*1: With automatic transmission

*2: With manual transmission

CAUTION:

- Depending on the shape of the vehicle body, there may be certain places where the electrical key transmitter SUB-ASSY doesn't operate.
- Even if the electrical key transmitter SUB-ASSY is within the vehicle exterior key detection area, if the electrical key transmitter SUB-ASSY is near a window, a door handle, or the center of the rear bumper, it may not be detected properly.
- Even when the electrical key transmitter SUB-ASSY is within the vehicle interior key detection area, if the transmitter SUB-ASSY is near the instrument panel, the accessory box of the instrument panel, inside or near the front cup holder, in the glove compartment, or on the floor, it may not be detected properly.
- If held improperly, the electrical key transmitter SUB-ASSY may not work properly.
- In the following conditions, the range of the detection area may become smaller, or the key may not be detected properly:
  - The battery of the electrical key transmitter SUB-ASSY is drained.
  - There is a facility that produces strong radio waves nearby, such as a TV tower, a power plant, a TV station, or a gas station.
  - Even when the electrical key transmitter SUB-ASSY is within the vehicle interior key detection area, if the transmitter SUB-ASSY is near the instrument panel, the accessory box of the instrument panel, inside or near the front cup holder, in the glove compartment, or on the floor, it may not be detected properly.
  - The electrical key transmitter SUB-ASSY is covered by or touching a metal product.
  - A radio wave type keyless entry system is being used nearby.
  - The electrical key transmitter SUB-ASSY is near a high-voltage device or a device that produces electrical noise.
  - There is an electric device, such as a charger, near the electrical key transmitter SUB-ASSY.

(1) The request signal from the collation ECM (smart key ECM ASSY) is sent via each electrical key antenna (vehicle exterior), and forms the detection area. The detection area formed by each electrical key antenna (vehicle exterior) is 0.7 m from the door handle and the rear bumper (electrical key antenna (trunk exterior)).

(2) When the vehicle is parked (with the power off and the door locked *), the detection area of each electrical key antenna (vehicle exterior) is formed by emitting a periodic request signal every 0.25 seconds to detect the electrical key transmitter SUB-ASSY. Also, with the door locked and touching the lock sensor, the request signal is emitted, and by forming the detection area on the vehicle exterior, the electrical key transmitter SUB-ASSY is detected.

NOTE:

*: The entry & start system controls each door individually. If you lock a door with the door lock switch or the wireless remote control function, even if all doors are not locked, a detection area is formed around the locked door.

(3) The detection area of the electrical key antenna (trunk exterior) is formed when you press the trunk opening switch ASSY.

(4) The vehicle interior detection area is formed and the electrical key transmitter SUB-ASSY is detected in any of the following conditions: 1) a door is opened or closed, 2) the brake pedal *1 or the clutch pedal *2 is depressed, 3) the engine switch is operating, 4) the conditions required for a warning are met, 5) operation of the entry door lock is performed.
*1: With automatic transmission
*2: With manual transmission

(5) The settings of the vehicle interior detection area for when the engine in turned on can be customized with the customize function. (Refer to TD - 155)

HOW TO PROCEED WITH TROUBLESHOOTING

NOTE:

- Use the following procedure to troubleshoot the entry and start system (for start function).
- *: Use the SSM4.

TD

1	VEHICLE BROUGHT TO WORKSHOP

NEXT

2	CUSTOMER PROBLEM ANALYSIS CHECK

NOTE:

- In troubleshooting, confirm that the problem symptoms have been accurately identified. Preconceptions should be discarded in order to make an accurate judgment. To clearly understand what the problem symptoms are, it is extremely important to ask the customer about the problem and the conditions at the time the malfunction occurred.
- Gather as much information as possible for reference. Past problems that seem unrelated may also help in some cases.
- The following 5 items are important points for problem analysis:

What	Vehicle model, system name
When	Date, time, occurrence frequency
Where	Road conditions
Under what conditions?	Running conditions, driving conditions, weather conditions
How did it happen?	Problem symptoms*

– *: Be sure to ask the customer in detail about the following points concerning the vehicle operating conditions, environment and problem, and then check for DTCs.
(1) If the entry lock/unlock function does not operate for all doors.
(2) If the entry lock function does not operate.
(3) If the entry unlock function does not operate.
(4) If both the entry lock and unlock functions do not operate.
(5) If the wireless lock and unlock functions do not operate.
(6) If there is no power even when the engine switch is pressed [does not turn on (ACC)].
(7) If the engine does not start with the entry ignition function.
(8) If the outside warning buzzers do not sound.

(9) If the customer attempted to start the engine by touching the electrical key to the engine switch and pressing the engine switch.
(10)If the interior warning buzzers do not sound.
(11)If the steering does not unlock.
(12)Any other details concerning the problem.

– If it is thought that wave interference is likely, be sure to ask the customer in detail about the following points concerning the vehicle operating conditions, environment and problem.
(1) Specific locations where the system does not operate (such as near TV towers, large video displays, wireless garage door opener systems, wireless security cameras, home security systems, etc.).
(2) Specific times when the system does not operate:
Whether or not symptoms occurred immediately after purchase or only recently. Whether or not the symptoms occurred even when the key was near the vehicle (electrical key antenna).
(3) If the system does not operate only when near specific vehicles (there may be an effect from electric waves from the wireless systems of other vehicles).
(4) If the system operates intermittently.
(5) If the key is bundled together with other items.
(6) If the key is carried together with other electronic devices, such as cell phones, personal computers, portable music players, other electrical keys, etc. (keep the key at least 0.1m {0.33ft.} away from such items).
(7) Where the key is being kept when not in use:
Whether or not the key being placed within 1m {3.28ft.} of items such as TVs, DVD recorders, induction cookers, rice cookers, dishwashers, modems, cell phones, personal computers, microwave ovens, desk or floor lamps, cordless telephones, etc.
(8) If there are electronic devices that transmit electric waves placed in the vehicle.
(9) When the key battery was last replaced (when the battery is low): The key battery can be checked using the "Key Low Battery" item in the [Data monitor] (See page TD - 53).
(10)If the customer installed any optional components (theft deterrent devices, wireless fog lights, etc.) to the vehicle.

NEXT

3	INSPECT BASIC OPERATION

(1) Inspect battery voltage.
Standard voltage: 11 to 14V
CAUTION:
If the voltage is below 11V, recharge or replace the battery before proceeding.
(2) Check for blown fuses, open or shorted wire harnesses, improperly connected connectors and other problems in areas that can be visually inspected.

NEXT

4	Communication inspection of the CAN communication system

(1) Check CAN communication system. (Refer to NW - 30)

Result

Result	Go to
Functioning properly	A
Not functioning properly	B

B → Go to "CAN communication system (How to troubleshoot)" (Refer to NW - 30).

A

5	Communication function inspection of large-scale multiplex communication system for vehicle body [LIN]

TD

(1) Inspect the large-scale multiplex communication system for vehicle body. (Refer to NW - 5)

Result

Result	Go to
Functioning properly	A
Not functioning properly	B

B → Go to "large-scale multiplex communication system for vehicle body [LIN] (How to troubleshoot)" (Refer to NW - 5)

A

6	CHECK FOR DTC*

(1) Check for DTCs and note any codes that are output. (See page TD - 161)

Result

Result	Go to
DTC is not output	A
Steering lock system DTC is output	B
Engine immobiliser system DTC is output	C
Entry and start system (for Entry Function) DTC is output	D
Entry and start system (for Start Function) DTC is output	E

B → Go to "steering lock system (List of diagnostic codes)" (Refer to SR - 4)

C → GO TO ENGINE IMMOBILISER SYSTEM (DIAGNOSTIC TROUBLE CODE CHART) (See page TD - 255)

D → GO TO ENTRY AND START SYSTEM (for Entry Function) (DIAGNOSTIC TROUBLE CODE CHART) (See page TD - 59)

E → GO TO DIAGNOSTIC TROUBLE CODE CHART (See page TD - 172)

A

7	PROBLEM SYMPTOMS TABLE

(1) Refer to Problem Symptoms Table. (See page TD - 156)

Result

Result	Proceed to
Fault is not listed in the Problem Symptoms Table	A
Fault is listed in the Problem Symptoms Table	B

B → Go to step 9

A

8	OVERALL ANALYSIS AND TROUBLESHOOTING*

(1) Operation Check. (See page TD - 150)
(2) Data monitor / active test (see page TD - 162)
(3) ECM terminal arrangement. (See page TD - 156)

NEXT

9	REPAIR OR REPLACE

NEXT

10	CHECK FOR DTC*

(1) Clear the DTCs. (See page TD - 161)
(2) Recheck for DTCs. (See page TD - 161)
NOTE:
Before checking for DTCs, perform the "DTC Output Confirmation Operation" procedure.

Result

Result	Proceed to
DTC is not output	A
DTC is output	B

B → GO TO DIAGNOSTIC TROUBLE CODE CHART

A

END

TD

Function inspection

1. Operation explanation
   (1) Entry ignition function (with automatic transmission):
      (a) If the electrical key transmitter SUB-ASSY is in the vehicle interior detection area and the brake pedal is depressed, you can press the engine switch and start the engine.
      (b) If the electrical key transmitter SUB-ASSY is in the vehicle interior detection area and the brake pedal is not depressed, you can press the engine switch to change the power mode. The power mode changes each time you press the engine switch, in the following order: OFF →ACC ON→ IG ON →OFF.
      (c) In IG OFF, after you enter the vehicle interior carrying the electrical key transmitter SUB-ASSY, if you press the engine switch without depressing the brake pedal, the power mode switches to ACC, and the entry key indicator light in the combination meter ASSY blinks green.
      (d) With the engine switch turned off, after you enter the vehicle interior holding the electrical key transmitter SUB-ASSY in your hand, and with the shift lever put in P, if you depress the brake pedal, the entry key indicator light in the combination meter ASSY will light up green.
      (e) If you press the engine switch when the entry key indicator light of the combination meter ASSY is lit up green, the engine will start.
   (2) Changing the power mode when the electrical key transmitter SUB-ASSY doesn't operate properly due to radio wave interference or the battery of the electrical key transmitter SUB-ASSY being drained (for automatic transmission):
      (a) Use the integrated mechanical key to unlock the door, hold the electrical key transmitter SUB-ASSY, and enter the vehicle interior.
      (b) Depress the brake pedal and hold the ornament side of the electrical key transmitter SUB-ASSY up to the engine switch.
      (c) The buzzer sounds and the vehicle turns to IG ON.
         NOTE:
         If the entry cancel function has been customized, the power mode changes to on (ACC).
   (3) Starting the engine when the electrical key transmitter SUB-ASSY doesn't operate properly due to radio wave interference or the battery of the electrical key transmitter SUB-ASSY being drained (for automatic transmission):
      (a) Use the integrated mechanical key to unlock the door, hold the electrical key transmitter SUB-ASSY, and enter the vehicle interior.
      (b) Depress the brake pedal, move the shift lever in P, and hold the ornament side of the electrical key transmitter SUB-ASSY up to the engine switch.
      (c) The buzzer sounds and the vehicle turns to IG ON. When the entry key indicator light of the combination meter ASSY lights up green, press the engine switch while pressing the brake pedal, and start the engine.
         NOTE:
         If the entry cancel function has been customized, the power mode changes to on (ACC).
   (4) Entry ignition function (with manual transmission):
      (a) If the electrical key transmitter SUB-ASSY is in the vehicle interior detection area and the clutch pedal is depressed, you can press the engine switch and start the engine.
      (b) If the electrical key transmitter SUB-ASSY is in the vehicle interior detection area and the clutch pedal is not depressed, you can press the engine switch to change the power mode. The power mode changes each time you press the engine switch, in the following order: OFF →ACC ON→ IG ON →OFF.
      (c) In IG OFF, after you enter the vehicle interior carrying the electrical key transmitter SUB-ASSY, if you press the engine switch without depressing the clutch pedal, the power mode switches to ACC, and the entry key indicator light in the combination meter ASSY blinks green.
      (d) In IG OFF, after you enter the vehicle interior carrying the electrical key transmitter SUB-ASSY, if you depress the clutch pedal, the entry key indicator light in the combination meter ASSY will light up green.
      (e) If you press the engine switch when the entry key indicator light of the combination meter ASSY is lit up green, the engine will start.
   (5) Changing the power mode when the electrical key transmitter SUB-ASSY doesn't operate properly due to radio wave interference or the battery of the electrical key transmitter SUB-ASSY being drained (for manual transmission):
      (a) Use the integrated mechanical key to unlock the door, hold the electrical key transmitter SUB-ASSY, and enter the vehicle interior.
      (b) Depress the clutch pedal and hold the ornament side of the electrical key transmitter SUB-ASSY up to the engine switch.

(c) The buzzer sounds and the vehicle turns to IG ON.

NOTE:

If the entry cancel function has been customized, the power mode changes to ACC.

(6) Starting the engine when the electrical key transmitter SUB-ASSY doesn't operate properly due to radio wave interference or the battery of the electrical key transmitter SUB-ASSY being drained (for manual transmission):

(a) Use the integrated mechanical key to unlock the door, hold the electrical key transmitter SUB-ASSY, and enter the vehicle interior.

(b) Depress the clutch pedal and hold the ornament side of the electrical key transmitter SUB-ASSY up to the engine switch.

(c) The buzzer sounds and the vehicle turns to IG ON.

2. Function inspection for the entry ignition

(1) Inspect the entry ignition function (only for automatic transmission).

(a) In IG OFF, with the shift lever in P, while carrying the electrical key transmitter SUB-ASSY, depress the brake pedal, and check that the entry key indicator light of the combination meter ASSY lights up green. If the entry key indicator light of the combination meter ASSY lights up green, press the engine switch, and check that the engine starts.

(b) Without depressing the brake pedal, after putting the vehicle in IG OFF, press the electrical key transmitter SUB-ASSY, and check that the power mode changes in the following way: OFF →ACC ON →IG ON →OFF. However, in IG ON, if the shift lever is in a position other than P, the power mode will not turn OFF but will turn to ACC ON.

(c) Turn off the vehicle's engine, press the engine switch, and check that it turns to IG OFF (the engine stops, and all electrical systems turn off). However, with the vehicle stopped, if the shift lever is in a position other than P, even if you press the engine switch, the power mode will not turn OFF but will turn to ACC ON. In this case, move the shift lever back into P, press the engine switch, and check that the power mode changes to OFF. After the power turns OFF, open the door and check that the steering lock operates.

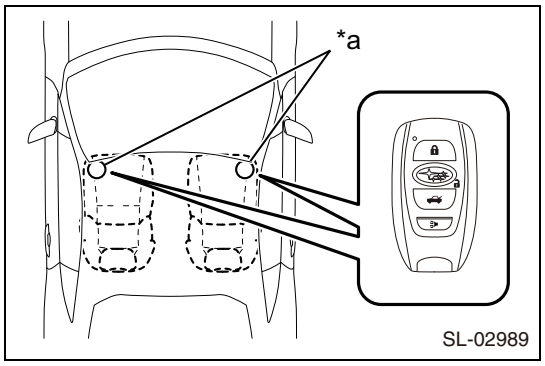

(d) Inspect the operation range of the entry ignition (front floor). In one of the inspection points, place the electrical key transmitter SUB-ASSY of the front seat in the direction shown in the figure, and check that the engine starts.

Captions in illustration

*a	Inspection point

CAUTION:

- Even when the electrical key transmitter SUB-ASSY is located within the key detection area inside the vehicle, it might not be detected properly if it is located on the instrument panel, inside the accessory box of the instrument panel, inside or near the front cup holder, inside the glove compartment, on the rear shelf, or on the floor.
- If the electrical key transmitter SUB-ASSY is within 0.2 m {0.66 feet} from the shift lever, communication may be impossible.
- If the electrical key transmitter SUB-ASSY is on the instrument panel or inside the glove compartment, the engine control system may not start.

NOTE:

Perform the inspection from both of these inspection points.

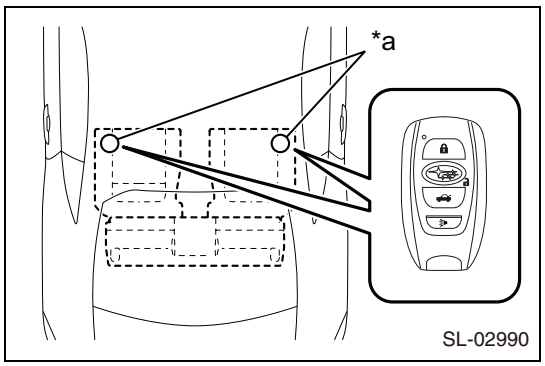

(e) Inspect the operation range of the entry ignition (rear floor). In one of the inspection points, place the electrical key transmitter SUB-ASSY, and check that the engine starts.

Captions in illustration

*a	Inspection point

CAUTION:

Even when the electrical key transmitter SUB-ASSY is located within the key detection area inside the vehicle, it might not be detected properly if it is located on the instrument panel, inside the accessory box of the instrument panel, inside or near the front cup holder, inside the glove compartment, on the rear shelf, or on the floor.

NOTE:
Perform the inspection from both of these inspection points.

(2) Check the entry ignition function (only for manual transmission).
(a) In IG OFF, while carrying the electrical key transmitter SUB-ASSY, depress the clutch pedal, and check that the entry key indicator light of the combination meter ASSY lights up green. If the entry key indicator light of the combination meter ASSY lights up green, press the engine switch, and check that the engine starts.
(b) Without depressing the clutch pedal, after turning IG OFF, press the electrical key transmitter SUB-ASSY, and check that the power mode changes in the following order: OFF →ACC ON →IG ON →OFF
(c) Turn off the vehicle's engine, press the engine switch, and check that it turns to IG OFF (the engine stops, and all electrical systems turn off). Open the door and check that the steering lock operates.

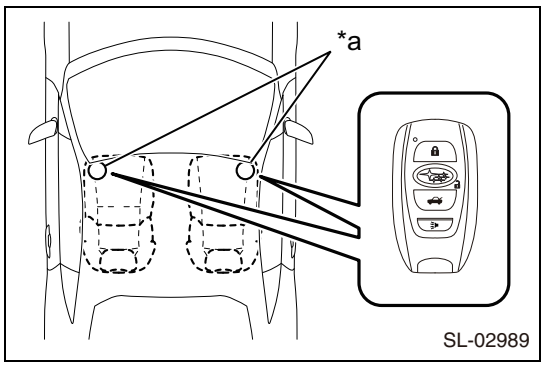

(d) Inspect the operation range of the entry ignition (front floor). In one of the inspection points, place the electrical key transmitter SUB-ASSY of the front seat in the direction shown in the figure, and check that the engine starts.

Captions in illustration

*a	Inspection point

CAUTION:
- Even when the electrical key transmitter SUB-ASSY is located within the key detection area inside the vehicle, it might not be detected properly if it is located on the instrument panel, inside the accessory box of the instrument panel, inside or near the front cup holder, inside the glove compartment, on the rear shelf, or on the floor.
- If the electrical key transmitter SUB-ASSY is within 0.2 m {0.66 feet} from the shift lever, communication may be impossible.
- If the electrical key transmitter SUB-ASSY is on the instrument panel or inside the glove compartment, the engine control system may not start.

NOTE:
Perform the inspection from both of these inspection points.
CAUTION:
If the electrical key transmitter SUB-ASSY is on the instrument panel or inside the glove compartment, the engine control system may not start.

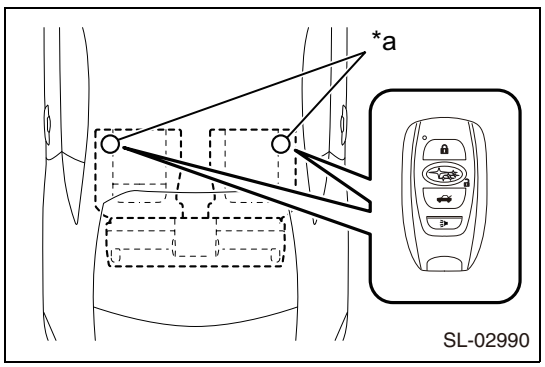

(e) Inspect the operation range of the entry ignition (rear floor). In one of the inspection points, place the electrical key transmitter SUB-ASSY, and check that the engine starts.

Captions in illustration

*a	Inspection point

CAUTION:
Even when the electrical key transmitter SUB-ASSY is located within the key detection area inside the vehicle, it might not be detected properly if it is located on the instrument panel, inside the accessory box of the instrument panel, inside or near the front cup holder, inside the glove compartment, on the rear shelf, or on the floor.
NOTE:
Perform the inspection from both of these inspection points.

3. Check the power mode change function
(1) Check the engine switch.
(a) With automatic transmission: check that the power mode changes based on the following table.

Shift position	Brake pedal	Power mode when the engine switch is pressed
P	Don't step on	Off →On (ACC) →On (IG) →off
P	Don't step on	Engine operation →off
P	Don't step on	On (ACC) *1 →off

Shift position	Brake pedal	Power mode when the engine switch is pressed
P	Step on	Off →The engine starts.
P	Step on	On (ACC) →The engine starts.
P	Step on	On (IG) →The engine starts.
P	Step on	Engine operation →off
P	Step on	On (ACC) *1 →off
N	Don't step on	Off →On (ACC) →On (IG) (After the power mode changed to On [IG], each time you press the engine switch, the power mode switches between On [IG] and On [ACC].)
N	Don't step on	Engine operating →On (ACC)
N	Step on	Off →The engine starts. *2
N	Step on	On (ACC) →The engine starts. *2
N	Step on	On (IG) →The engine starts. *2
N	Step on	Engine operating →On (ACC)
The shift lever is not in P or in N.	Don't step on	Off →On (ACC) →On (IG) (After the power mode changed to On [IG], each time you press the engine switch, the power mode switches between On [IG] and On [ACC].)
The shift lever is not in P or in N.	Don't step on	Engine operating →On (ACC)
The shift lever is not in P or in N.	Step on	Off →On (IG)
The shift lever is not in P or in N.	Step on	On (ACC) →On (IG)
The shift lever is not in P or in N.	Step on	Engine operating →On (ACC)

NOTE:

- *1: This status is applicable only when the power mode is turned from ON (IG) to ON (ACC).
- *2: Only in cases when the steering lock was unlocked.

(2) With manual transmission:

Check that the power mode changes based on the following table.

Clutch pedal	Power mode when the engine switch is pressed
Don't step on	Off →On (ACC) →On (IG) →off
Don't step on	Engine operation →off
Step on	Off →The engine starts.
Step on	On (ACC) →The engine starts.
Step on	On (IG) →The engine starts.
Step on	Engine operation →off

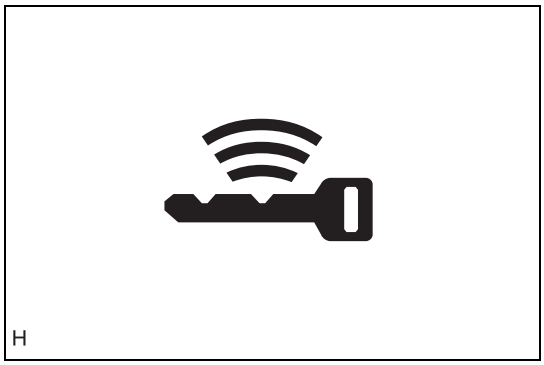

4. Check the display for the power mode change

(1) Check the entry key indicator.

Indicator unit inspection

Engine switch	Indicator
Off (Excluding conditions where the engine could start)	Off
On (ACC) (Excluding conditions where the engine could start*)	Blinking green
On (IG) (Excluding conditions where the engine could start*)	Blinking green
Conditions where the engine could start and shift P	Lit up green
After the engine starts	Off

NOTE:

*: Excluding conditions where the engine could start, as following:

With automatic transmission

The engine starts if the engine switch is pressed in the following conditions.

Condition 1	All conditions are met: • The power mode switched from on (IG) to on (ACC). • Key confirmation* or the engine immobilizer is unset (the engine switch is on (ACC) or on (IG)). • The shift lever is in N (steering lock is unlocked). • The stop light switch is on.
Condition 2	All conditions are met: • The power mode is not switched from on (IG) to on (ACC). • Key confirmation* or the engine immobilizer is unset (the engine switch is on (ACC) or on (IG)). • The shift lever is in P or in N. • The stop light switch is on.

With manual transmission

The engine starts if the engine switch is pressed when the following conditions are met.	
Condition 1	All conditions are met: • Key confirmation* or the engine switch is on (ACC) or on (IG). • The clutch start switch is on.

TD

*: When the electrical key transmitter SUB-ASSY is in the vehicle interior, the ID code sent as a result of the communication between the electrical key transmitter SUB-ASSY and the collation ECM (smart key ECM ASSY) and the ID code calculated by the collation ECM (smart key ECM ASSY) are compared. If these ID codes match, the vehicle recognizes that the electrical key transmitter SUB-ASSY is in the vehicle interior.

(a)List of indicator conditions

Indicator	Vehicle status
Off	Any condition is met: 1. The engine is turning. 2. With the engine switch off, the vehicle is in a state where even if the engine switch is pressed, the engine won't start.
Lit up green	All the following conditions are met, the vehicle is in a state where if the engine switch is pressed, the engine will start. The electrical key transmitter SUB-ASSY is in the vehicle interior, the stop light switch ASSY *1 or the clutch start switch ASSY *2 is on, and the shift lever is in P *1.
Blinking green (Blinking slowly)	With the engine switch in on (ACC) or on (IG), the vehicle is in a state where even if the engine switch is pressed, the engine won't start.
Blinking green (Blinking quickly)	If the power is on, or the engine is started, the steering wheel is unlocked (steering lock is stuck). When the steering wheel is unlocked, the indicator begins blinking. When 30 seconds have passed since the blinking began, if the power is on, or if the engine was started again, the indicator stops blinking.
Blinking yellow	A defect is found in the steering lock ECM. If it is determined that there is a defect in the steering lock ECM or in the collation ECM (smart key ECM ASSY), the indicator begins blinking. If the ECM returns to its normal status, or if 15 seconds have passed since the blinking started, the indicator stops blinking.

*1: With automatic transmission

*2: With manual transmission

NOTE:

If the shift lever is in the N position, the engine can start only when the steering wheel is unlocked. (With automatic transmission)

CUSTOMIZE PARAMETERS

1. CUSTOMIZE ENTRY AND START SYSTEM (for Start Function)

(1) Customizing with the SSM4

CAUTION:

- When the customer requests a change in a function, first make sure that the function can be customized.
- Be sure to make a note of the current setting before customizing.
- When troubleshooting a function, first make sure that the function is set to the default setting.

NOTE:

The items in the table below can be customized.

(a)Connect the SSM4 to the DLC3.

(b)Turn the engine switch on (IG).

(c)Turn the SSM4 on.

(d)Enter the following menus: [Keyless Access(Collation ECM)] →[Customize]

(e)Select the setting by referring to the table below.

Entry & Start

Display	Default	Content	Setting	Relevant ECU
[Ignition Available Area]	All	Function that sets the area that the key must be in before the engine switch can be operated.	Front or All	Certification ECU (smart key ECU assembly)
[Smart Cancel]	OFF	Function that enables or disables the entry and start system.	OFF or ON	Certification ECU (smart key ECU assembly)

Warning

Display	Default	Content	Setting	Relevant ECU
[Key Low Battery Warning]	ON	Function that enables or disables the sounding of the buzzer when the key battery is low and the engine switch is turned off after being on (IG) for 20 minutes or more.	OFF or ON	Certification ECU (smart key ECU assembly)

(2) Entry cancel function (manual operation)

NOTE:

While the entry and start system is canceled, it is possible to lock and unlock the doors with the wireless operation, and the start system can be operated by holding the key against the engine switch.

(a)The following functions are disabled when the entry and start system is canceled.

1. Entry unlock/lock functions
2. Entry ignition function
3. Key lock-in prevention function
4. Entry back door open/lock function
5. Entry warning functions

(b)Canceling the system operation:

1. Make sure the following conditions are met:
   - The engine switch is off.
   - The driver side door is closed.
   - The driver side door is unlocked.
2. Press the unlock switch of the electrical key transmitter sub-assembly.
3. Open the driver side door within 5 seconds of completing the step above (driver side door: closed at beginning of step →opened).
4. With the driver side door open, press the unlock switch of the electrical key transmitter sub-assembly 2 times within 5 seconds of completing the step above.

   CAUTION:

   If the driver side door is closed before or while pressing the unlock switch, the entry cancel setting mode will end.
5. Close and open the driver side door twice within 30 seconds of completing the above step (driver side door: open at beginning of step →closed →opened →closed →opened).
6. With the driver side door open, press the unlock switch of the electrical key transmitter sub-assembly 2 times within 30 seconds of completing the step above.

   CAUTION:

   If the driver side door is closed before or while pressing the unlock switch, the entry cancel setting mode will end.
7. Close and open the driver side door within 30 seconds of completing the step above (driver side door: open at beginning of step →closed →opened).

8. Close the driver side door within 5 seconds of completing the above step.
9. Check that the wireless buzzer sounds twice (short beeps) to confirm that the entry and start system has been canceled.

(c) Perform the following procedure to restore the entry and start system to the active state from the canceled state.

1. Perform the procedures to cancel the entry and start system again.
2. Check that the wireless buzzer sounds once (short beep) to confirm that the entry and start system has been restored to the active state.

   NOTE:

   - The system changes between the canceled state and the active state each time the procedure to cancel the system is performed.
   - The buzzer sounds twice when the system changes from the active state to the canceled state, and sounds once when the system changes from the canceled state to the active state.

PROBLEM SYMPTOMS TABLE

NOTE:

- Use the table below to help determine the cause of problem symptoms. If multiple suspected areas are listed, the potential causes of the symptoms are listed in order of probability in the "Suspected Area" column of the table.
  Check each symptom by checking the suspected areas in the order they are listed. Replace parts as necessary.
- Inspect the fuses and relays related to the system before inspecting the suspected areas below.

TD

Entry & Start

Symptom	Suspected Area	See page
Engine does not start	Refer to "Engine does not Start"	TD - 204
Power Source Mode does not Change to ON (IG and ACC)	Refer to "Power Source Mode does not Change to ON (IG and ACC)"	TD - 219
Power Source Mode does not Change to ON (IG)	Refer to "Power Source Mode does not Change to ON (IG)"	TD - 227
Power Source Mode does not Change to ON (ACC)	Refer to "Power Source Mode does not Change to ON (ACC)"	TD - 231

ECM terminal arrangement

NOTE:

- Regarding the collation ECM (smart key ECM ASSY) (entry function related), refer to the following. (Refer to TD - 40)
- Regarding the ID code box (immobilizer code ECM), refer to the following. (Refer to TD - 241)
- Regarding the steering lock actuator ASSY (steering lock ECM), refer to the following. (Refer to SR - 9)

1. Check the collation ECM (smart key ECM ASSY).

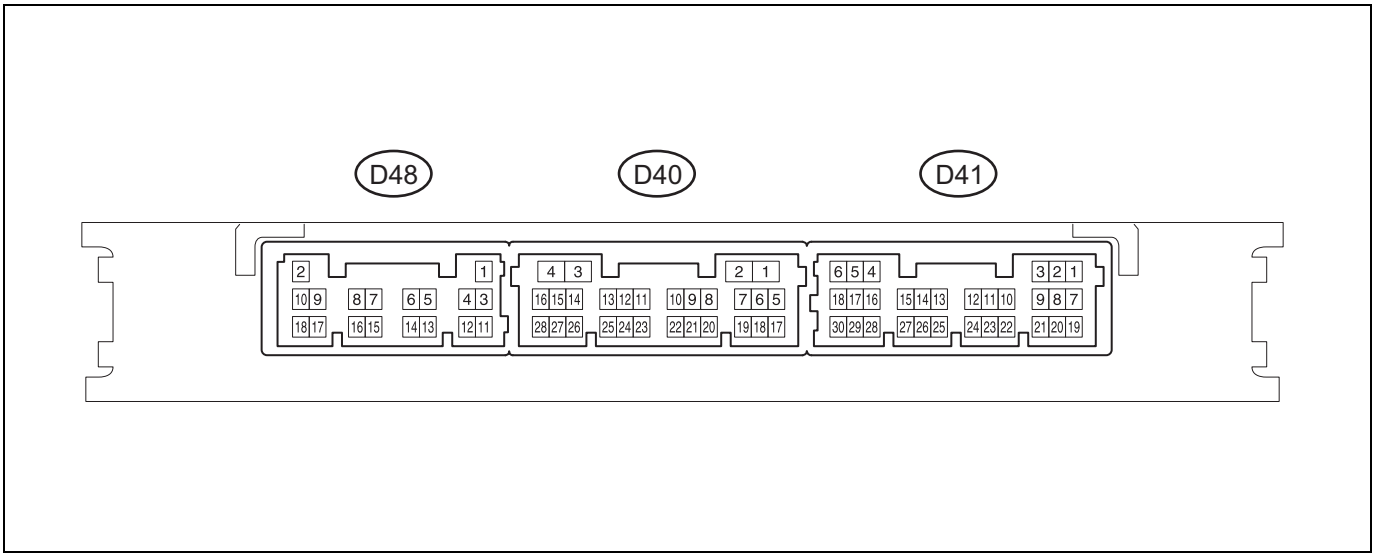

(1) Remove the D41 and the D48 connectors of the collation ECM (smart key ECM ASSY).

(2) Measure the voltage and resistance according to the following table.

Terminal No. (Terminal symbol)	Input/Output	Terminal description	Conditions	Specified condition	Related [Data monitor] item
D41-4 (ACCD) - chassis ground	Output	ACC signal	20°C (68°F)	81.49 to 118.98 Ω	[ACC relay monitor]

Terminal No. (Terminal symbol)	Input/Output	Terminal description	Conditions	Specified condition	Related [Data monitor] item
D41-6 (IG1D) - chassis ground	Output	IG1 signal	20°C (68°F)	40.74 to 54.49 Ω	[IG1 relay monitor (outside)]
D41-25 (P) - D48- 11 (GND)*1	Input	Shift lever P position signal	The shift lever is in the P position →the shift lever is not in the P position	40 kΩ or more →200 Ωor less	[Shift P Signal]
D41-26 (SLP) - D48-11 (GND)	Input	Steering lock bar position signal	Always	10 kΩ or more	[Steering unlock SW]
D41-27 (SPD) - chassis ground	Input	Vehicle speed signal	Always	30 kΩ or more	[Vehicle Speed]
D41-28 (SSW1) - chassis ground	Input	SSW1 contact signal	The engine switch is being pushed →the engine switch is not being pushed	1 Ωor less →10 kΩ or more	[Start switch1]
D41-30 (SSW2) - chassis ground	Input	SSW2 contact signal (Back-up for SSW1, and works in the same way as SSW1) NOTE: Backup of SSW1. Works in the same way as SSW1.	The engine switch is being pushed →the engine switch is not being pushed	1 Ωor less →10 kΩ or more	[Start switch2]
D48-11 (GND) - Chassis ground	-	Ground	Always	1 Ωor less	-
D48-5 (N-SW) - chassis ground *1	Input	Neutral switch signal	Shift position P or N →Other than P or N	1V or less →9 V or more	[Neutral SW/Clutch SW]
D48-10 (CLUT) - chassis ground *2	Input	Clutch switch signal	Except for when the engine in cranking, perform the following operations: remove your foot from the clutch pedal →depress the clutch pedal	1V or less →9 V or more	[Neutral SW/Clutch SW]
D48-9 (IG2D) - chassis ground	Output	IG2 signal	20°C (68°F)	74.15 to 460.88 Ω	[IG2 relay monitor (outside)]
D48-2 (+B) - chassis ground	Input	+B power supply	Always	11 to 14 V	-
D48-17 (TACH) - chassis ground	Input	Engine speed signal	Always	10 kΩ or more	[Engine conditions]
D48-18 (STP1) - chassis ground *1	Input	Stop light switch signal	Remove your foot from the brake pedal →depress the brake pedal	1V or more →9V or less	[Stop Light Switch 1]

*1: With automatic transmission

*2: Manual transmission

If you cannot get the specified result, there could be a problem in the wiring harnesses.

(3) Reconnect the D41 and the D48 connectors of the collation ECM (smart key ECM ASSY).

(4) Refer to the table below and measure the voltage and check for a pulse.

Terminal No. (Terminal symbol)	Input/Output	Terminal description	Conditions	Specified condition	Related [Data monitor] item
D41-25 (P) - D48-11 (GND) *1	Input	Shift lever P position signal	The shift lever is in the P position →the shift lever is not in the P position	1.5V or more →9V or less	[Shift P Signal]
D41-4 (ACCD) - D48-11 (GND)	Output	ACC signal	Engine switch off →Engine switch on (ACC)	1V or less →8.5V or more	[ACC relay monitor]

Terminal No. (Terminal symbol)	Input/Output	Terminal description	Conditions	Specified condition	Related [Data monitor] item
D41-6 (IG1D) - D48-11 (GND)	Output	IG1 signal	Engine switch on (ACC) →Engine switch on (IG)	1V or less →9 V or more	[IG1 relay monitor (outside)]
D41-26 (SLP) - D48-11 (GND)	Input	Steering lock bar position signal	Steering wheel lock →Steering wheel unlock *3	11 to 14 V →1.2 V or less	[Steering unlock SW]
D41-27 (SPD) - D48-11 (GND)	Input	Vehicle speed signal	The engine switch on (IG), the vehicle running at approx. 5 km/h {3 MPH}	Pulse generation (Refer to waveform 1)	[Vehicle Speed]
D41-28 (SSW1) - D48-11 (GND)	Input	Engine switch signal	The engine switch is not being pushed →the engine switch is being pushed	9 V or more →1 V or less	[Start switch1]
D41-29 (SLR+) - D48-11 (GND)	Output	Steering lock motor drive command (motor drive permission signal sent from the collation ECM (smart key ECM ASSY))	Steering lock motor is operated →steering lock motor does not operate →steering lock motor operates *4	Pulse generation (Refer to waveform 2)	-
D41-30 (SSW2) - D48-11 (GND)	Input	SSW2 contact signal NOTE: Backup of SSW1. Works in the same way as SSW1.	The engine switch is not being pushed →the engine switch is being pushed	9 V or more →1 V or less	[Start switch2]
D48-7 (STSW) - D48-11 (GND)	Output	Starter request signal	Depress the brake pedal *1 or the clutch pedal *2 and press the engine switch (starter on)→ After approx. 1 second, the engine switch is released (starter off)	2V or less →9 V or more	Starter request signal
D48-5 (N-SW) - chassis ground *1	Input	Neutral switch signal	Shift position P or N →Other than P or N	1V or less →9 V or more	[Neutral SW/Clutch SW]
D48-10 (CLUT) - chassis ground *2	Input	Clutch switch signal	Except for when the engine in cranking, perform the following operations: remove your foot from the clutch pedal →depress the clutch pedal	1V or less →9 V or more	[Neutral SW/Clutch SW]
D40-28 (ACCR) - D48-11 (GND)	Input	ACC Relay Cut Signal	Depress the brake pedal *1 or the clutch pedal *2 and press the engine switch (starter on)→ After approx. 1 second, the engine switch is released (starter off)	2V or less →9 V or more	ACC Relay Cut Signal
D48-17 (TACH) - D48-11 (GND)	Input	Clutch shift position sensor signal	Idle revolutions after the engine is warmed up	Pulse generation (Refer to waveform 3)	[Engine conditions]
D48-9 (IG2D) - D48-11 (GND)	Output	IG2 signal	Engine switch on (ACC) →Engine switch on (IG)	1V or less →9 V or more	[IG2 relay monitor (outside)]
D48-18 (STP1) - D48-11 (GND)*1	Input	Stop light switch signal	Remove your foot from the brake pedal →depress the brake pedal	1V or less →9 V or more	[Stop Light Switch 1]

*1: With automatic transmission

*2: With manual transmission

NOTE:

- *3: When the shift lever is in P (with automatic transmission), if a door is opened or closed with the engine switch off, the steering is locked. If the key is in the vehicle interior and the engine switch is on (ACC) or on (IG), the steering is unlocked.
- *4: If the following conditions are met, the steering lock motor operates and door opens.
  - The shift lever is in P (for automatic transmission).
  - Holding the electrical key transmitter SUB-ASSY, turn the engine switch on (IG), and after unlocking the steering, turn the engine switch off.

(5) Using an oscilloscope, check the ECM waveform.

CAUTION:

The oscilloscope waveform shown in the figure is an example for reference. The noise and chattering are not shown in the figure.

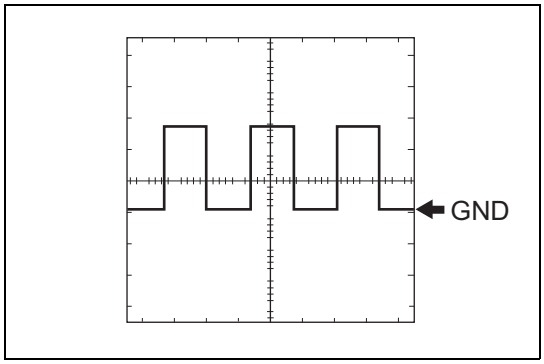

(a)Waveform 1 (reference)

Item	Contents
Tester connection	D41-27 (SPD) - D48-11 (GND)
Tool setting	5 V / DIV., 100 ms. / DIV.
Conditions	The engine switch on (IG), the vehicle running at approx. 5 km/h {3 MPH}

NOTE:

The faster the vehicle speed, the shorter the wavelength becomes.

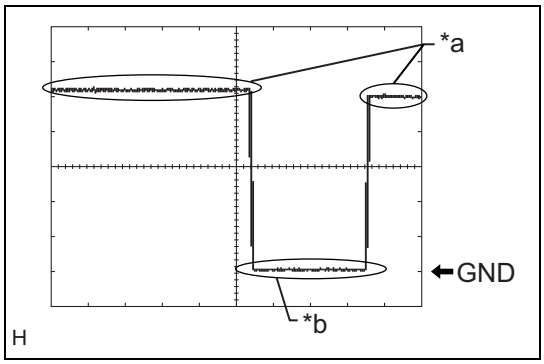

(b)Waveform 2 (reference)

Item	Contents
Tester connection	D41-29 (SLR+) - D48-11 (GND)
Tool setting	2V/DIV., 200ms./DIV.
Conditions	Steering lock motor is operated →steering lock motor does not operate →steering lock motor operates *1

Captions in illustration

*a	The steering lock motor does not operate.
*b	The steering lock motor is operating.

NOTE:

*1: If all the following conditions are met, the steering lock motor operates when a door is opened.

- The shift lever is in P. *
  - *: for automatic transmission
- When you turn the engine switch on (IG) holding the electrical key transmitter SUB-ASSY, the handle is unlocked.
- The engine switch is off.

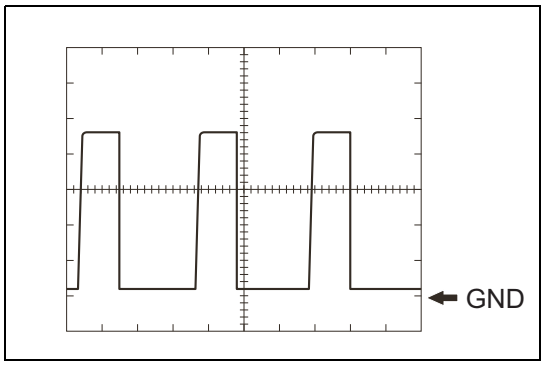

(c)Waveform 3 (reference)

Item	Contents
Tester connection	D48-17 (TACH) - D48-11 (GND)
Tool setting	2 V / DIV., 2 ms. / DIV.
Conditions	Idle revolutions after the engine is warmed up

NOTE:

The faster the engine speed, the shorter the wavelength becomes.

TD

2. CHECK ECM

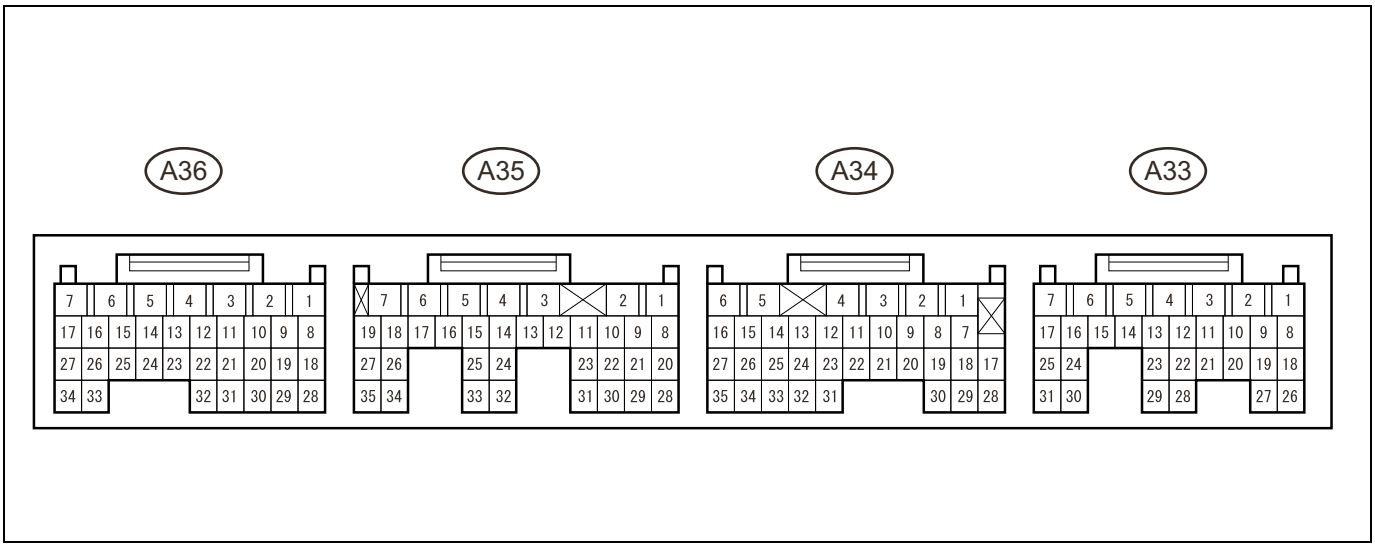

(1) Refer to the table below and measure the resistance and the voltage and check for a pulse.

TD

Terminal No. (Terminal symbol)	Input/Output	Terminal description	Conditions	Specified condition	Related [Data monitor] item
A36-4 (GNDEG1) - chassis ground	-	Ground	Always	1 Ωor less	-
A33-14 (STSW2) - A36-4 (GNDEG1)	Input	Starter switch signal	Engine switch is ON (IG)	1 V or less	[Starter control]
			Cranking	6 to 13V	
A33-16 (NEUT) - A36-4 (GNDEG1)	Input	Neutral switch signal	The engine switch is on (IG), the shift lever is not in P or N.	10 to 13V	-
			The engine switch is on (IG), the shift lever is in P or N.	1 V or less	
A33-17 (START) - A36-4 (GNDEG1)	Input	Starter request signal	Engine switch is ON (IG)	1 V or less	-
			Cranking	6V or more	
A35-15 (TACHO) - A36-4 (GNDEG1)	Output	Engine speed signal	Idle revolutions after the engine is warmed up	Pulse generation (Refer to waveform 1)	Engine speed
A35-26 (STRLY) - A36-4 (GNDEG1)	Output	Starter relay signal	Engine switch is ON (IG)	11 to 14 V →1V or less	[Starter signal]
			Cranking	1 V or less	
A35-32 (ACCR) - A36-4 (GNDEG1)	Output	ACC Relay Cut Signal	Engine switch is ON (IG)	10 to 13V	-
			Cranking	1 V or less	
A35-34 (STCTRLY) - A36-4 (GNDEG1)	Output	Starter relay cut signal	Engine switch is ON (IG)	10 to 13V	[Starter cut relay]
			Cranking	1 V or less	

If you cannot get the specified result, there could be a problem in the ECM.

(2) Inspect using an oscilloscope.

CAUTION:

The waveform shown in the figure is an example for reference. The noise and chattering are not shown in the figure.

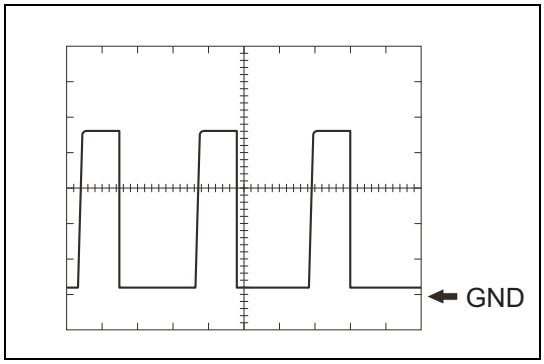

(a)Waveform 3 (reference)

Item	Contents
Tester connection	A35-15 (TACHO) - A36-4 (GNDEG1)
Tool setting	2 V / DIV., 2 ms. / DIV.
Conditions	Idle revolutions after the engine is warmed up

NOTE:
The faster the engine speed, the shorter the wavelength becomes.

DIAGNOSIS SYSTEM

1. Description of functions
   (1) Entry and start system (for start function) data and the Diagnostic Trouble Codes (DTCs) can be read through the Data Link Connector 3 (DLC3) of the vehicle. When the system seems to be malfunctioning, use the SSM4 to check for malfunctions and perform repairs.
2. Check DLC3
   (1) Check DLC3.
3. INSPECT BATTERY VOLTAGE
   (1) If the voltage is below 11V, recharge or replace the battery before proceeding.

Standard voltage: 11 to 14V

DTC CHECK / CLEAR

CAUTION:
If the SSM4 is connected to the vehicle with the engine switch off, the information stored in entry and start system related ECMs (the certification ECM and main body ECM) cannot be read. However, entry and start system DTCs and [Data monitor] information can be confirmed even if the engine switch is off using the method below:

1. CHECK DTC (POWER SOURCE CONTROL)
   (1) Connect the SSM4 to the DLC3.
   (2) Turn the engine switch on (IG).
   (3) Turn the SSM4 on.
   (4) Enter the following menus: [Keyless Access(Power Supply ECM)] →[DTC]
   (5) Check for DTCs.
   NOTE:
   Refer to the SSM4 operator's manual for further details.
2. CHECK DTC (ENTRY AND START)
   (1) Connect the SSM4 to the DLC3.
   (2) Turn the engine switch on (IG).
   (3) Turn the SSM4 on.
   (4) Enter the following menus: [Keyless Access(Collation ECM)] →[DTC]
   (5) Check for DTCs.
   NOTE:
   Refer to the SSM4 operator's manual for further details.
3. CHECK DTC (ENGINE AND ECT)
   (1) Connect the SSM4 to the DLC3.
   (2) Turn the engine switch on (IG).
   (3) Turn the SSM4 on.
   (4) Enter the following menus: [Engine Control System] →[DTC]
   (5) Check for DTCs.
   NOTE:
   Refer to the SSM4 operator's manual for further details.
4. CLEAR DTC (POWER SOURCE CONTROL)
   (1) Connect the SSM4 to the DLC3.

(2) Turn the engine switch on (IG).
(3) Turn the SSM4 on.
(4) Enter the following menus: [Keyless Access(Power Supply ECM)] →[DTC] →[Clear Memory]
(5) Clear the DTCs by following the directions on the SSM4 display.
NOTE:
Refer to the SSM4 operator's manual for further details.

5. CLEAR DTC (ENTRY AND START)
(1) Connect the SSM4 to the DLC3.
(2) Turn the engine switch on (IG).
(3) Turn the SSM4 on.
(4) Enter the following menus: [Keyless Access(Collation ECM)] →[DTC] →[Clear Memory]
(5) Clear the DTCs by following the directions on the SSM4 display.
NOTE:
Refer to the SSM4 operator's manual for further details.

6. CLEAR DTC (ENGINE AND ECT)
(1) Connect the SSM4 to the DLC3.
(2) Turn the engine switch on (IG).
(3) Turn the SSM4 on.
(4) Enter the following menus: [Engine Control System] →[DTC] →[Clear Memory]
(5) Clear the DTCs by following the directions on the SSM4 display.
NOTE:
Refer to the SSM4 operator's manual for further details.

Data monitor / active test

1. Data monitor
NOTE:
By using the SSM4 and reading [Data monitor], you can read the statuses and values for switches, sensors, actuators, and other items without removing parts. Because the non-intrusive inspection allows you to read the intermittent statuses or signals without interfering with parts or lines, it is very convenient. Diagnostic time can be saved by reading the [Data monitor] information at the initial stage of the troubleshooting.
CAUTION:
The normal values written in the chart below are for reference. Do not depend on reference value only when judging if the part is faulty.
(1) Connect the SSM4 to the DLC3.
(2) Turn the ignition switch to ON.
(3) Turn on the SSM4.
(4) Enter the following menus: [Keyless Access(Collation ECM)] →[Data monitor], or [Body Control] →[Data monitor], or [Brake Control System] →[ABS/VDC System] →[Data monitor], or [Engine Control System] →[Data monitor]

SSM screen: [Each System] →[Keyless Access(Power Supply ECM)] →[Data monitor]

Item name	Description/display range	Normal value	Remarks
[Shift P signal] *1	Shift position is P Display range: ON/OFF	ON: The shift is in the P position OFF: The shift is not in the P position	Use this item to find out if the shift switch (P) is faulty.
[Steering unlock SW]	This item indicates the steering unlock sensor signal output from the steering lock actuator. Display range: ON/OFF	ON: Steering unlock OFF: Steering lock	• In IG OFF and with the shift in the P position (transmission A/T), open (or close) one of the doors to lock the steering. • Change the power status to ACC ON or IG ON with the electrical key transmitter SUB-ASSY (electronic key) in the vehicle to unlock the steering. • The engine cannot be started when the steering unlock signal is OFF.

Item name	Description/display range	Normal value	Remarks
[Stop Light Switch 1]	Brake pedal status Display range: ON/OFF	ON: Brake pedal is depressed. OFF: Brake pedal is released.	• Use this item to find out if the stop light switch is faulty. • If the engine cannot be started due to a malfunction in the stop light switch signal, "OFF" is displayed. • In case of a malfunction, you can start the engine by holding down the push button start switch.
[System SW1]	Push button start switch 1 status Display range: ON/OFF	ON: Push button start switch is pressed OFF: Push button start switch is released.	• This item may not be displayed if the push button start switch is pressed too quickly. • Use this item to find out if the push button start switch input signal is faulty.
[System SW2]	Push button start switch 2 status Display range: ON/OFF	ON: Push button start switch is pressed OFF: Push button start switch is released.	• Back-up for push button start switch 1. However, when operating by holding down the push button start switch, if both push button start switch 1 and push button start switch 2 are not functioning properly, the control will not operate. • This switch operates in the same way as push button start switch 1.
[Neutral SW/Clutch SW (AT model)]	Shift position (P, N) status Display range: ON/OFF	ON: The shift is in the P or N position OFF: The shift is not in the P or N position	• Use this item to find out if the neutral start switch is faulty. • If the engine cannot be started due to a malfunction in the neutral start switch, "OFF" is displayed.
[Neutral SW/Clutch SW (MT model)]	Clutch pedal status Display range: ON/OFF	ON: Clutch pedal is depressed. OFF: Clutch pedal is released.	• Use this item to find out if the clutch start switch is faulty. • If the engine cannot be started due to a malfunction in the clutch start switch, "OFF" is displayed.
[IG1 relay monitor (outside)]	Coil voltage monitor status for the IG1 relay Display range: ON/OFF	ON: IG ON OFF: IG OFF	• Use this item to find out if the IG1 relay is faulty. • When in ACC ON, "OFF" is displayed.
[IG1 relay monitor (inside)]	Drive output monitor status for the IG1 relay Display range: ON/OFF	ON: IG ON OFF: IG OFF	• Use this item to find out if the IG1 relay is faulty. • When in ACC ON, "OFF" is displayed.
[IG2 relay monitor (outside)]	Coil voltage monitor status for the IG2 relay Display range: ON/OFF	ON: IG ON OFF: IG OFF	• Use this item to find out if the IG2 relay is faulty. • When in ACC ON, "OFF" is displayed.
[IG2 relay monitor (inside)]	Drive output monitor status for the IG2 relay Display range: ON/OFF	ON: IG ON OFF: IG OFF	• Use this item to find out if the IG2 relay is faulty. • When in ACC ON, "OFF" is displayed.
[Starter request signal monitor]	Engine start request signal status Display range: ON/OFF	ON: With the shift in the P position, depressing the brake, press and hold the push button start switch (transmission A/T) ON: Depressing the clutch pedal, press and hold the push button start switch (transmission M/T) OFF: After approx. 1 second, release the push button start switch	• If the engine cannot be started due to a malfunction in the start request signal, "OFF" is displayed. • If you press the push button start switch for a short time, the time "ON" is displayed will be very short. Therefore, you must press and hold it for a while.
[ACC relay monitor]	ACC relay drive status Display range: ON/OFF	ON: ACC ON OFF: ACC OFF	• When in IG ON, "ON" is displayed. • When the engine is cranking, "OFF" is displayed.
[ACC Relay Cut Signal]	ACC relay cut signal input status Display range: ON/OFF	ON: When cranking OFF: Not cranking	-

Item name	Description/display range	Normal value	Remarks
[Engine Speed]	Engine status Display range: [Stopped] / [rotating]	[Rotating]: While engine is running [Stopped]: The engine is stopped	-
[Vehicle speed signal]	Vehicle running/stopped status Display range: [Stopped status] / [Drive status]	[Drive status]: The vehicle is running (at 5 km/h or faster) [Stopped status]: The vehicle is stopped	-
[Power supply status]	Power status Display range: [All OFF status]/ [ACC relay ON status] / [IG1 relay ON status] / [IG2 relay ON status] / [ST status]	[All OFF]: ACC OFF and IG OFF ACC ON: ACC ON IG1 ON: IG ON IG2 ON: IG ON ST: Start request signal transmitting	Because "IG1 ON" and "IG2 ON" are displayed almost simultaneously, you may not be able to see the "IG1 ON" indication. (Because "IG1 ON" is displayed for a short time.)
[Powertrain Type]	Vehicle identification status Display range: [Cnv-MT] / [Cnv-AT]	[Cnv-AT]: A conventional A/T vehicle (A/T vehicle not equipped with HV) [Cnv-MT]: A conventional M/T vehicle	-
[IG1 outside circuit abnormal]	Malfunction in the coil-side circuit for the IG1 relay Display range: Yes/No	Yes: Circuit not functioning properly No: Circuit functioning properly	• Use this item to find out if the IG1 relay is faulty. • If the engine cannot be started due to a malfunction in the IG1 relay, "OFF" is displayed.
[IG2 outside circuit abnormal]	Malfunction in the coil-side circuit for the IG2 relay Display range: Yes/No	[Yes]: Circuit not functioning properly [No]: Circuit functioning properly	• Use this item to find out if the IG2 relay is faulty. • If the engine cannot be started due to a malfunction in the IG2 relay, "OFF" is displayed.
[Start-stop SW fault]	This item detects a mismatch between the push button start switch 1 signal and the push button start switch 2 signal. Display range: Yes/No	[Yes]: Switches not functioning properly (mismatch between the signals of push button start switches 1 and 2) [No]: Switches functioning properly	You can start the engine even when the result is [Yes]. However, you cannot use the "emergency IG OFF when running" or "emergency engine start when the brake is faulty" functions that are operated by pressing and holding the push button start switch.
[Park Signal Mismatch]	Shift position (P) signal malfunction Display range: Yes/No	[Yes]: Signals not functioning properly (mismatch between the CAN communication and direct signal statuses) [No]: Signals functioning properly	You can switch to OFF even when the result is [Yes]. (vehicle will not be left ACC ON or IG ON.)
[Steering lock unlock wait time-out]	Malfunction in the steering lock / unlock function Display range: Yes/No	[Yes]: Lock/unlock not functioning properly (Example: the lock bar gets stuck) [No]: Lock/Unlock functioning properly	If the engine cannot be started due to a malfunction in the steering lock/ unlock, "[Yes]" is displayed.
[Key collation wait time-out]	Key collation malfunction Display range: Yes/No	[Yes]: Collation not functioning properly (A collation malfunction is detected when the ID code sent from the electronic key and the ID code recorded in the Collation ECM do not match.) [No]: Collation functioning properly	If the engine cannot be started due to a key collation malfunction, [Yes] is displayed.
[Shift N signal*1]	Shift in position N Display range: ON/OFF	ON: The shift is in the N position OFF: The shift is not in the N position	Use this item to find out if the shift switch (N) is faulty.

*1: Transmission A/T

2. Use the SSM4 and [Data monitor] to determine functionality and narrow down the defective part.
   NOTE:
   Enter the vehicle while carrying the electrical key transmitter SUB-ASSY (Electronic key), set the ignition to IG OFF and put the shifter in the P position, and perform the following operations to check each [Data monitor] activity.

The data monitor activity when the engine is started (Transmission A/T)

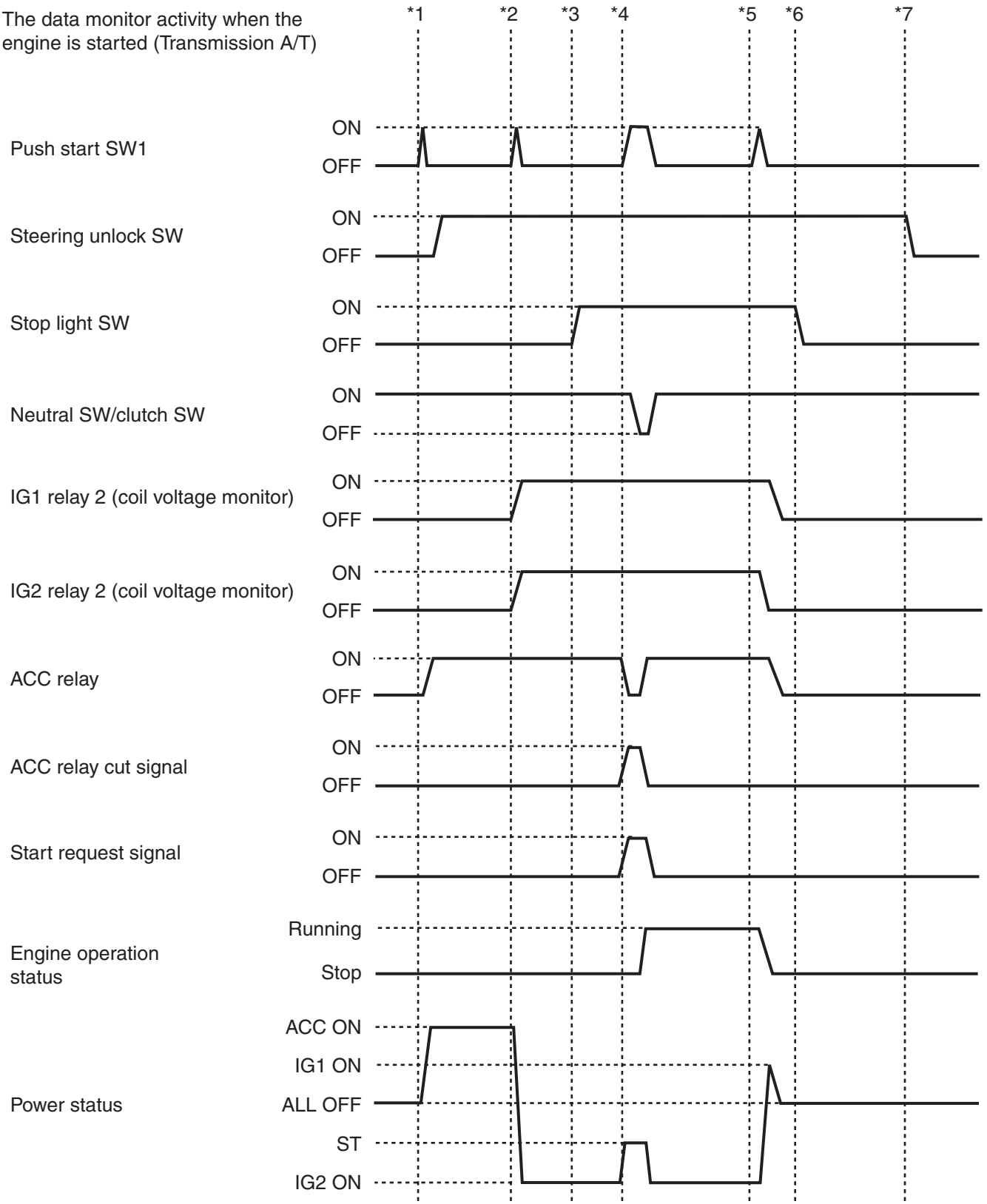

*1: Press the push button start switch without depressing the brake pedal, and check that the power status changes to ACC ON.

*2: Press the push button start switch without depressing the brake pedal, and check that the power status changes to IG ON.

*3: Depress the brake pedal. (Stop light switch ON)

*4: Press the push button start switch while depressing the brake pedal, and check that the engine starts.
*5: Press the push button start switch while depressing the brake pedal, and check that the power status changes to IG OFF.
*6: Release the brake pedal.
*7: Open a door.
NOTE:
Enter the vehicle while carrying the electrical key transmitter SUB-ASSY (Electronic key), set the ignition to IG OFF and perform the following operations to check each [Data monitor] activity.

The data monitor activity when the engine is started (Transmission M/T)

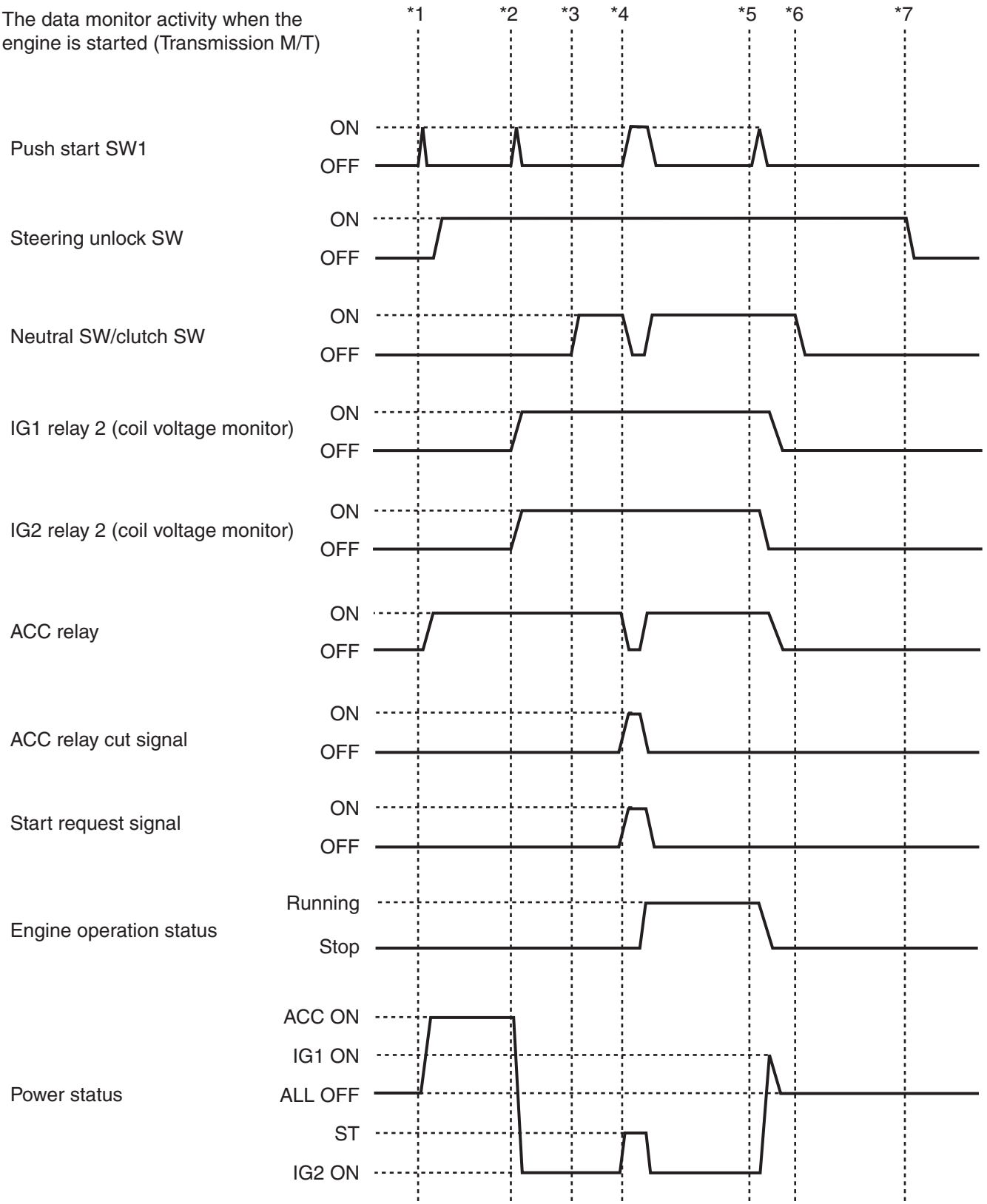

*1: Press the push button start switch without depressing the clutch pedal, and check that the power status changes to ACC ON.

*2: Press the push button start switch without depressing the clutch pedal, and check that the power status changes to IG ON.

*3: Depress the clutch pedal. (Clutch start switch ON)

*4: Press the push button start switch while depressing the clutch pedal, and check that the engine starts.
*5: Press the push button start switch while depressing the clutch pedal, and check that the power status changes to IG OFF.
*6: Release the clutch pedal.
*7: Open a door.

SSM screen: [Each System] →[Keyless Access(Collation ECM)] →[Data monitor]

Item name	Description/display range	Normal value	Remarks
[Ignition]	This item indicates the IG power input status of the smart key ECM ASSY (collation ECM). Display range: ON/OFF	ON: IG ON OFF: IG OFF	When it is in the ACC ON state, "OFF" is displayed.
[Immobilizer]	This item indicates the engine immobilizer system status, as determined by the smart key ECM ASSY (collation ECM). Display range: Unset / Set	Unset: The engine immobilizer is unset (engine start permitted) (ACC ON or further) Set: The engine immobilizer is set (engine start prohibited) (IG OFF)	When [Set] is displayed for this item, you cannot start the engine. NOTE: • The security indicator light blinks when [Set] is displayed for this item. • The security indicator light is associated with the set/unset status of the immobilizer, but not with the lock/unlock status of the steering wheel.
[Sleep possible status]	This item indicates the sleep enabled status of the steering lock ECM. Display range: [Sleep-mode possible] / [Sleep-mode not possible]	Sleep permitted: Sleep possible status No: Sleep not permitted	-
[Wake-up transmission status]	This item indicates the transmission status of the wake-up signal for the steering lock ECM. Display range: Yes/No	Yes: Wake-up signal transmission No: No wake-up signal transmission	-
[Lock confirmation]	This item indicates the lock confirmation status of the steering lock actuator ASSY (steering lock ECM). Display range: Set/Unset	Set: Lock confirmed Unset: Lock not confirmed	The steering is not locked when ”Unset” is displayed.
[Unlock confirmation]	This item indicates the unlock confirmation status of the steering lock actuator ASSY (steering lock ECM). Display range: Set/Unset	[Set]: Unlock confirmed [UnSet]: Unlock not confirmed	The steering is not unlocked when "Unset" is displayed. (The engine cannot be started.)
[Engine start]	This item indicates the status of the engine start permission signal, which is decided by the steering actuator ASSY (steering lock ECM) and sent to the smart key computer (collation ECM). Display range: OK/NG	OK: Engine start permitted NG: Engine start prohibited	• If "OK" is displayed for this item, the smart key ECM ASSY (collation ECM) receives the unlock confirmation signal from the steering lock actuator ASSY (steering lock ECM) and enables fuel injection and the engine to start. • When [NG] is displayed for this item, you cannot start the engine.
[Sensor abnormal (past)]	This item indicates a history of malfunctions in the position sensor inside the steering lock actuator ASSY (steering lock ECM). Display range: [NG(Past)] / [OK]	Abnormal: There is an error history. (Both the lock and unlock sensors inside the steering lock actuator ASSY (steering lock ECM) were ON at the same time. Normally, these sensors are not ON at the same time.) OK: There is no error history for the lock and unlock sensors inside the steering lock actuator ASSY (steering lock ECM).	If [NG(Past)] is displayed for this item, the problem might be caused by a malfunction of the position sensor inside the steering lock actuator ASSY or a mechanical failure.
[Motor power supply short-circuit abnormal (past)]	This item indicates a history of malfunctions (circuit shorts) in the signal transmitted from the smart key ECM ASSY (collation ECM) to the steering lock actuator ASSY (steering lock ECM). Display range: [NG(Past)] / [OK]	[NG(Past)]: Motor power supply short circuit history present [OK]: No motor power supply short circuit history	This item displays the history when a circuit malfunction occurs between the smart key ECM ASSY (collation ECM) and the steering lock actuator ASSY (steering lock ECM).

Item name	Description/display range	Normal value	Remarks
[Motor driver short-circuit abnormal (past)]	This item indicates a history of malfunctions (circuit shorts) in the motor drive circuit inside the steering lock actuator ASSY (steering lock ECM). (The diagnostic code B2781 is output) Display range: [NG(Past)] / [OK]	[NG(Past)]: Motor driver short circuit history present [OK]: No motor driver short circuit history present	This item indicates the malfunctions in the steering lock motor drive circuit inside the steering lock actuator ASSY (steering lock ECM).
[Steering lock lock/unlock command reception history]	This item indicates the unlock request signal reception history. Display range: [Unrec] / [Rec]	[Rec]: Unlock request signal reception history present [Unrec]: No unlock request signal reception history	-
[Lock Bar Stuck Error]	This item indicates a history of times when the steering lock bar was driven to the unlock position for a certain period of time but the steering wheel could not be properly unlocked. Display range: Yes/No	Yes: There is a history of lock bar engagement. No: No history of the lock bar being stuck	-
[Push start abnormal]	This item indicates a history of push start malfunctions caused by the steering lock actuator ASSY (steering lock ECM). Display range: [NG(Past)] / [OK]	[NG(Past)]: Push button start malfunction history present [OK]: No push button start malfunction history	-
[EEPROM access abnormal]	This item indicates the steering lock ECM status. Display range: [NG(Past)] / [OK]	[Abnormal]: Steering lock ECM malfunction [Normal]: Steering lock ECM normal	-
[Engine start permission request reception status]	This item indicates the reception status of the engine start permission signal, which is decided by the steering lock actuator ASSY (steering lock ECM) and sent to the smart key ECM ASSY (collation ECM). Display range: NG/OK	NG: When it is not yet received OK: When it has already been received	• If [OK] is displayed, the smart key ECM ASSY (collation ECM) has received the unlock confirmation signal from the steering lock actuator ASSY (steering lock ECM) and the engine injection and ignition have been permitted. • If [NG] is displayed for this item, the engine cannot be started.
[L Code Check]	This item indicates the result of collation between the smart key ECM ASSY (collation ECM) and the steering lock actuator ASSY (steering lock ECM). Display range: [NG(Past)] / [OK]	[Abnormal]: Collation results abnormal [Normal]: Collation results normal	• The L code is not registered for the smart key ECM ASSY (collation ECM) or the steering lock actuator ASSY (steering lock ECM). • The steering cannot be locked. • The steering cannot be unlocked. (The engine cannot be started.)
[Steering lock unlock request reception status]	This item indicates the unlock request signal reception status. Display range: NG/OK (10 s)	[NG(Past)]: IG ON, ACC ON or engine start operation not performed OK: Within 10 seconds after IG ON, ACC ON or engine start operation	• If the unlock request signal is not received, the engine cannot be started. • If the steering unlock conditions are met but [OK(10s)] is not displayed, the smart key ECM ASSY (collation ECM) might have a malfunction.
[Steering lock lock request reception status]	This item indicates the lock request signal reception status. Display range: OK (10s)/NG	OK: When a lock request is received within 10 seconds after any one of the doors is opened while the shifter is in the P position (Transmission A/T) and the vehicle ignition is turned to IG OFF. [NG(Past)]: Other than above	If the steering lock conditions are met but [OK(10s)] is not displayed, the smart key ECM ASSY (collation ECM) might have a malfunction.
[L Code Check(Past)]	This item indicates the history of the results of collation between the smart key ECM ASSY (collation ECM) and the steering lock actuator ASSY (steering lock ECM). Display range: [NG(Past)] / [OK]	[NG(Past)]: There is an error history of collation results [OK]: There is no error history of collation results	-
[S Code Check]	This item indicates the collation result between the smart key ECM ASSY and the ID code box. Display range: [NG(Past)] / [OK]	[Abnormal]: Collation not functioning properly [Normal]: Collation functioning properly	• The S code is not registered for the smart key ECM ASSY or the ID code box. • The engine cannot be started.

TD

Item name	Description/display range	Normal value	Remarks
[S Code Check(Past)]	This item indicates the collation result history between the smart key ECM ASSY and the ID code box. Display range: [NG(Past)] / [OK]	[NG(Past)]: There is an error history of collation results [OK]: There is no error history of collation results	-

NOTE:
Enter the vehicle while carrying the electrical key transmitter SUB-ASSY (Electronic key), set the ignition to IG OFF and put the shifter in the P position (Transmission A/T), and perform the following operations to check each [Data monitor] activity.

The data monitor activity when the steering is locked/unlocked

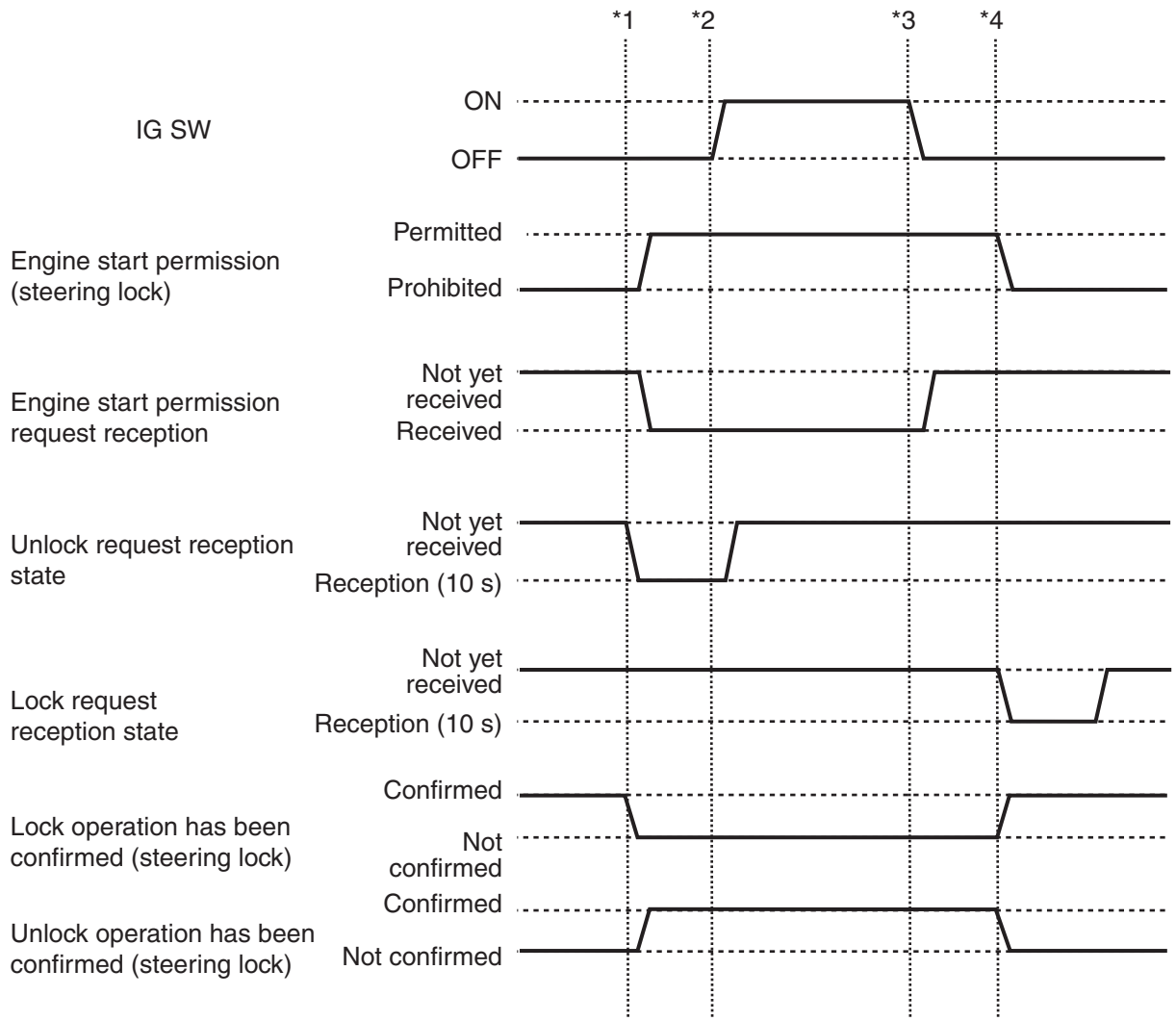

*1: Press the push button start switch without depressing the brake pedal (transmission A/T) or the clutch pedal (transmission M/T). Check that the power status switches to ACC ON.
*2: Press the push start switch without depressing the brake pedal (transmission A/T) or the clutch pedal (transmission M/T). Check that the power status switches to IG ON.
*3: Press the push button start switch and check that the power status switches to IG OFF.
*4: Open a door. (The steering wheel is now locked).

SSM screen: [Each System] →[Engine Control System] →[Data monitor]

Item name	Description/display range	Normal value	Remarks
[Engine Speed]	Indicates the engine speed Display range: 0 to 16383.75 r/min	Varies depending on the engine speed	-
[Starter Switch]	Starter drive request Display range: ON/OFF	ON: The starter drive request is output. OFF: The starter drive request is not output.	If there is a malfunction, the engine cannot be cranked.
[Starter cut relay]	This item indicates the starter cut relay status. Display range: ON/OFF	ON: The starter cut relay is ON OFF: The starter cut relay is OFF	"ON" is displayed when the engine cannot be cranked.
[Shift SW Status (P Range)] *1	This item indicates the neutral start switch status. Display range: ON/OFF	ON: The shift is in the P position OFF: The shift is not in the P position	If there is a malfunction, the engine cannot be cranked.
[Shift SW Status (N Range)] *1	This item indicates the neutral start switch status. Display range: ON/OFF	ON: The shift is in the N position OFF: The shift is not in the N position	If there is a malfunction, the engine cannot be cranked.
[ST1]	This item indicates the signal from the stop light switch ASSY. Display range: ON/OFF	ON: Brake pedal is depressed. OFF: Brake pedal is released.	-
[Ignition Switch]	This item indicates the IG2 status. Display range: ON/OFF	ON: IG2 relay is ON OFF: IG2 relay is OFF	-

TD

*1: Automatic transmission

NOTE:

Perform the following operations to check the result for each [Data monitor] item.

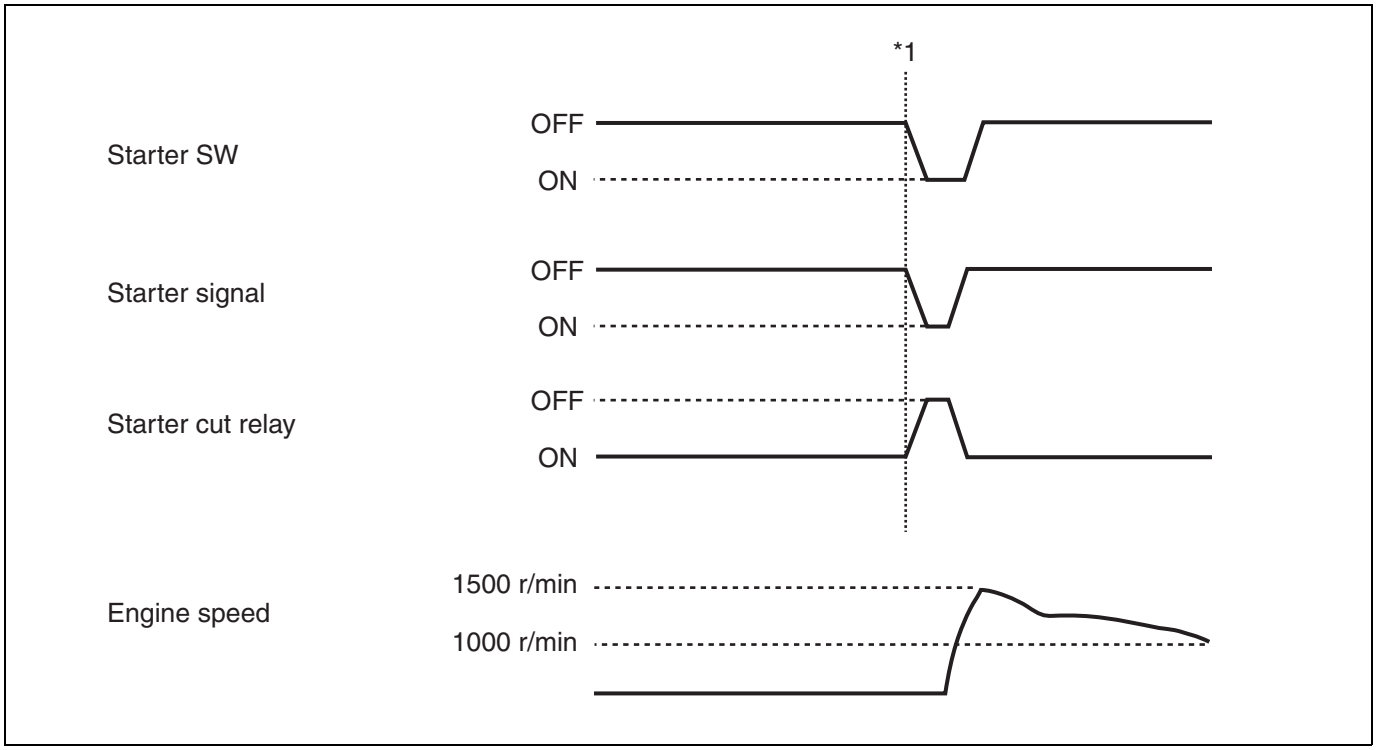

*1:

Transmission A/T: With the power status in IG ON and the shift in position P, depress the brake pedal and press the push button start switch. Check that the engine starts.

Transmission M/T: With the power status in IG ON, depress the clutch pedal and press the push button start switch. Check that the engine starts.

SSM screen: [Each System] →[Brake Control System] →[Data monitor]

Item name	Description/display range	Normal value	Remarks
[Wheel speed]	This item indicates the vehicle speed. Display range: 0.0 to 326.4 [km/h]	0.0 to 326.4 [km/h] (Approximately the same as the actual vehicle speed)	-

3. Active test
   (1) Turn the ignition switch to OFF.
   (2) Connect the SSM4 to the DLC3.
   (3) Turn the ignition switch to ON and select [Each System] →[Keyless Access(Power Supply ECM)] →[Active Test] to display the [Active Test] list.
   (4) Conduct an [Active Test] and determine functionality and narrow down the defective part.

SSM screen: [Each System] →[Keyless Access(Collation ECM)] →[Active Test]

Item name	Part to be forcibly driven	Drive	Remarks
[Steering lock power supply]	Smart key computer ASSY (collation ECM)	Supply/stop	When in IG ON
[STSW]	Smart key computer ASSY (collation ECM)	Supply/stop	Perform cranking in order to turn the starter switch ON. Be very careful regarding the service operation. When forcibly driving this item, implement it with the ignition ON.
[IG2]	Smart key computer ASSY (collation ECM)	Supply/stop	Turn the ignition power (relay upstream battery side) ON. If you forcibly drive this item, there may be failure codes registered for the engine, transmission, and the VDC unit. In that case, you must clear the failure codes.
[IG1]	Smart key computer ASSY (collation ECM)	Supply/stop	Turn the ignition power (relay upstream alternator side) ON. If you forcibly drive this item, there may be failure codes registered for the engine, transmission, and the VDC unit. In that case, you must clear the failure codes.
[ACC]	Smart key computer ASSY (collation ECM)	Supply/stop	Turn the ACC power ON.

SSM screen: [Each System] →[Keyless Access(Collation ECM)] →[Active Test]

Item name	Part to be forcibly driven	Drive	Remarks
[Power/Engine SW Light]	Push button start switch illumination	Output/stop	Push button start switch illumination OFF (15 seconds or more since ON→OFF) and in ACC ON, IG ON, or the engine is turning.

DIAGNOSTIC TROUBLE CODE CHART

DTC Code	Detection Item	DTC Output Confirmation Operation	See page
B2271	[IGN fuse blown-out or IGN circuit failure]	Turn the engine switch on (IG).	TD - 174
B2274	[ACC circuit abnormal]	Wait 10 seconds after turning the engine switch on (ACC) or on (IG), and then wait another 10 seconds after turning the engine switch off.	TD - 177
B2275	[STSW circuit abnormal]	Start the engine.	TD - 181
B2276	[ACCR signal abnormal]	Start the engine.	TD - 183
B2277	[Submerging circuit abnormal]	Submerging circuit monitor result = ON	TD - 185
B2282	[Vehicle speed signal abnormal]	Drive the vehicle for 20 seconds at a vehicle speed of 25 km/h (16MPH) or more, and then drive the vehicle at a vehicle speed of less than 5 km/h {3MPH} for 20 seconds.	TD - 186

DTC Code	Detection Item	DTC Output Confirmation Operation	See page
B2283	[Vehicle speed sensor abnormal detection]	In IG ON, any of the following conditions is established. • Direct connection vehicle speed pulse showing 50 km/h or more continues for 10 seconds, then the CAN and direct connection speed pulses both turn to 0 km/h within 1 second. • In an AT vehicle, CAN and the direct connection show 0 km/h, the engine speed (according to the direct connection) is 2000 r/min or more, the shift lever is not in P or N, and ACCR is not in LOW level for 300 seconds. • In an MT vehicle, CAN and the direct connection show 0 km/h, the engine speed (according to the direct connection) is 2000 r/min or more, the N position for the shift lever is OFF, the clutch switch is OFF, and ACCR is in the LOW level for 300 seconds.	TD - 186
B2284	[Brake Signal (Cable-Information does not match to BEAN-Information)]	Connect the cable to the negative (-) battery terminal, release the brake pedal and wait 20 seconds or more. Then depress the brake pedal for 20 seconds or more.	TD - 191
B2285	[Steering lock position signal abnormal]	Disconnect the cable from the negative (-) battery terminal, wait 30 seconds and then reconnect the cable to the negative (-) battery terminal. Wait 40 seconds or more with the engine switch off (with the steering wheel locked), then turn the engine switch on (ACC) (with the steering wheel unlocked) and wait 40 seconds or more.	TD - 194
B2286	[Run able Signal (Cable-Information does not match to BEAN-Information)]	Disconnect the cable from the negative (-) battery terminal, wait 30 seconds and reconnect the cable to the negative (-) battery terminal. Wait 20 seconds or more with the engine switch off, then start the engine and maintain an engine speed of 1000 r/min or more for 20 seconds or more after starting the engine.	TD - 198
U0073	[Control Module Communication Bus "A" Off]	10 or more seconds have passed after IG ON	TD - 202
U0100	[Lost Communication With ECM/PCM "A"]	10 or more seconds have passed after IG ON	TD - 202
U0101	[Lost Communication With TCM]	10 or more seconds have passed after IG ON	TD - 202
U0122	[Lost Communication With Vehicle Dynamics Control Module]	10 or more seconds have passed after IG ON	TD - 202
U0140	[Lost Communication With Body Control Module]	10 or more seconds have passed after IG ON	TD - 202
U0155	[Lost Communication With Instrument Panel Cluster (IPC) Control Module]	10 or more seconds have passed after IG ON	TD - 202
U0401	[Invalid Data Received From ECM/PCM "A"]	10 or more seconds have passed after IG ON	TD - 202
U0422	[Invalid Data Received From Body Control Module]	10 or more seconds have passed after IG ON	TD - 202

DTC	B2271	IGN fuse blown or IGN circuit fault

Circuit description

This DTC is output when a problem is detected in the IG1 drive circuit, the IG2 drive circuit, or the IG hold circuit in the collation ECM (smart key ECM ASSY).

NOTE:

If you remove and then reconnect the battery cable, the power returns to the mode it was before you removed the cable.

DTC No.	DTC detection status	Faulty part	DTC Output Confirmation Operation
B2271	Meet any of the conditions (1-trip detection logic*1): • There is a problem in the IG1 or IG2 drive of the collation ECM (smart key ECM ASSY). • There is a problem in the 1G hold circuit of the collation ECM (smart key ECM ASSY).	• AM2 No. 2 fuse • Collation ECM (smart key ECM ASSY) • Wiring harness or connector	Turn the ignition switch to ON. NOTE: To turn the engine switch to on (IG), hold the key, move the shift lever into P or N *2, remove your foot from the brake pedal *2 or the clutch *3, and press the engine switch 2 times.

TD

*1: The code is output only when the problem is found and the engine switch is on (IG).

*2: With automatic transmission

*3: With manual transmission

NOTE:

- The IG1 and IG2 drive circuits drive the IG1 and IG2 relays.
- Even if the collation ECM (smart key ECM ASSY) performs an inaccurate operation, if the IG1 drive circuit and the IG2 drive circuit are on, the IG hold circuit will hold the engine switch in an on (IG) status.

Vehicle status and failsafe function when a problem is detected

Vehicle status when a problem is detected	Failsafe function when a problem is detected
The power mode cannot be changed to on (IG). (the engine does not start)	The power mode does not change to on (IG).

Related [Data monitor] and [Active Test]

DTC No.	[Data monitor] item	[Active Test] item
B2271	Power supply • [IG1 relay monitor (outside)] • [IG2 relay monitor (outside)] Engine • [Ignition]	-

Circuit figure

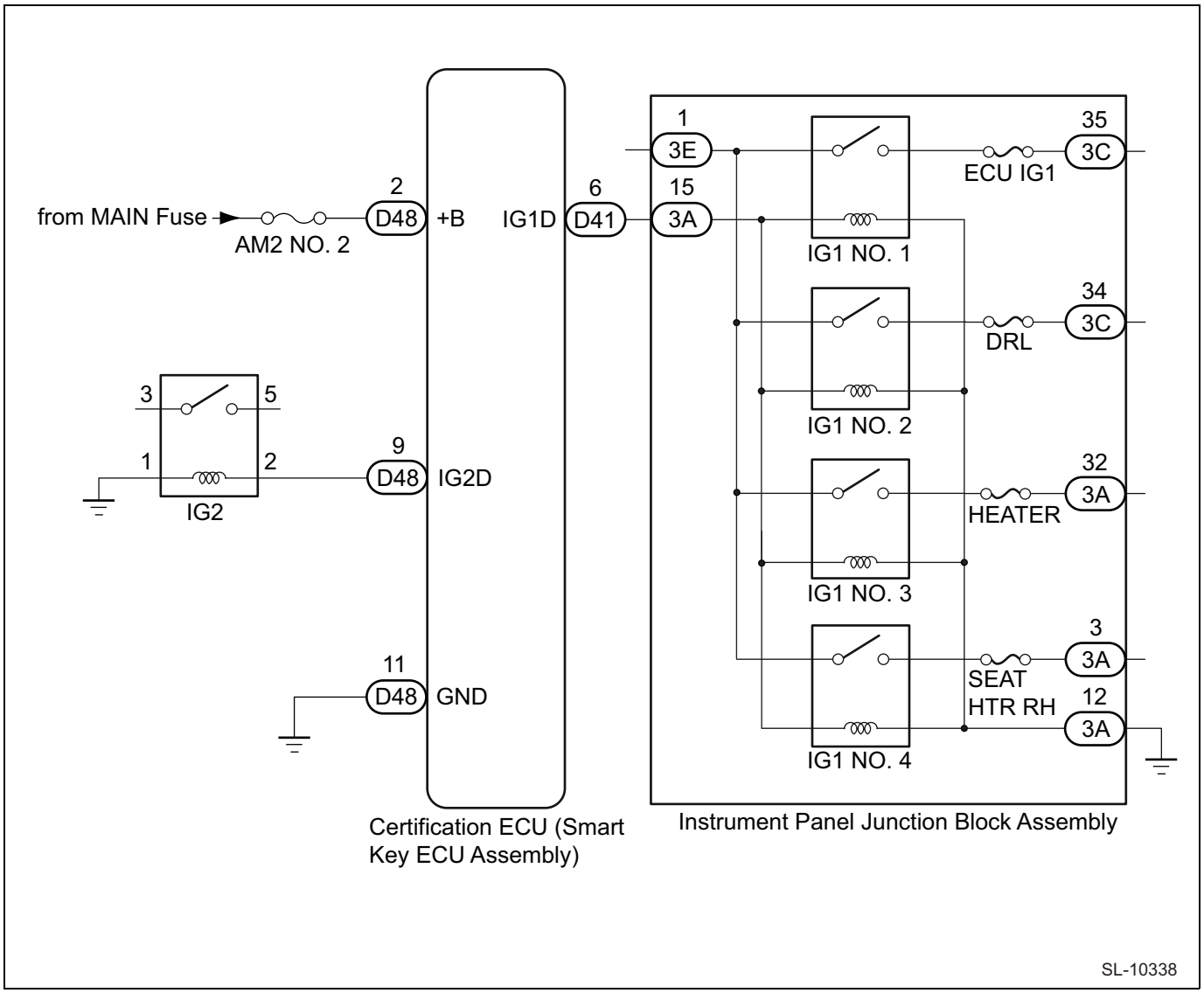

Inspection steps

CAUTION:

- The entry & start system has functions that use the CAN communication. Before performing troubleshooting, perform the inspection in "How to troubleshoot", and check that there are no communication problems. (Refer to TD - 146)
- Before replacing the collation ECM (smart key ECM ASSY), refer to "entry & start system (entry function)". (Refer to TD - 5)
- After repair, perform the [DTC output confirmation operation], and check that the DTC is not output again.
- Before performing the following inspection steps, check the fuses related to this system.

1	Checking the harnesses and connectors (power supply)

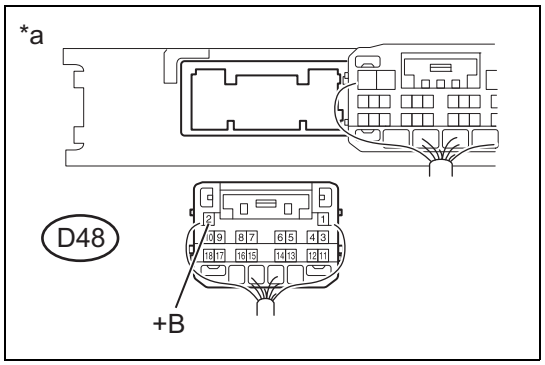

(1) Remove the D48 connector of the collation ECM (smart key ECM ASSY).
(2) Measure the voltage according to the following table.

Voltage

Inspection terminals	Inspection conditions	Standard value
D48-2 (+B) - chassis ground	Always	9.5 to 16V

Captions in illustration

*a	Rear side of the wiring harness connector (See "collation ECM (smart key ECM ASSY)")

NG → Repair or replacement of the harnesses or connectors of the circuits that connect to the power source

TD

OK

2	Checking the harnesses and connectors (grounding)

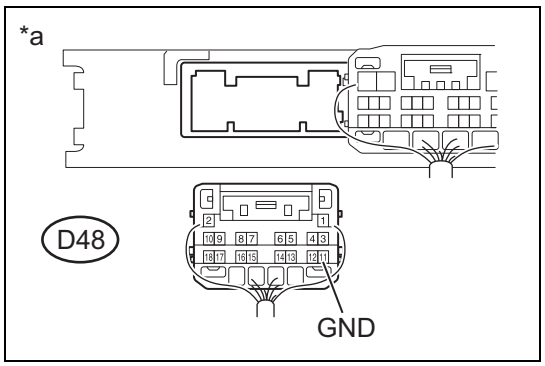

(1) Measure the resistance according to the following table.

Resistance

Inspection terminals	Inspection conditions	Standard value
D48-11 (GND) - Chassis ground	Always	1 Ωor less

Captions in illustration

*a	Rear side of the wiring harness connector (See "collation ECM (smart key ECM ASSY)")

NG → Repair or replacement of the harnesses or connectors

OK

3	Unit inspection of the collation ECM (smart key ECM ASSY)

(1) Reconnect the D48 connector of the collation ECM (smart key ECM ASSY).

*a

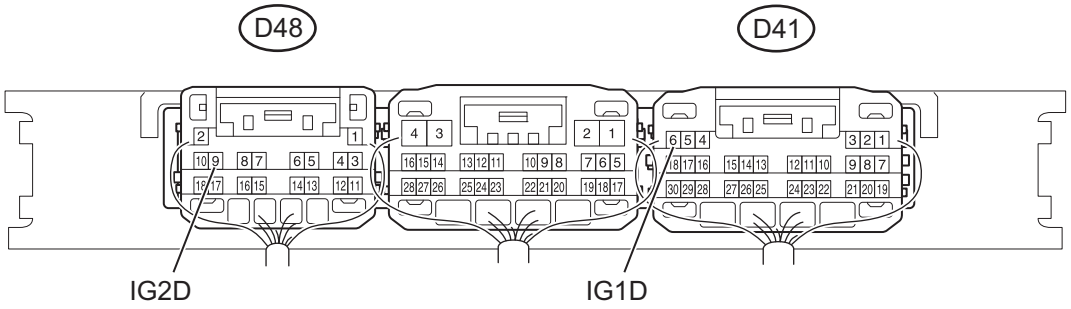

Captions in illustration

*a	Connector connected (Collation ECM (smart key ECM ASSY))	-	-

TD

(2) Measure the voltage according to the following table.

Voltage

Inspection terminals	Inspection conditions	Standard value
D41-6 (IG1D) - chassis ground	Engine switch on (ACC) →Engine switch on (IG)	1V or less →9 V or more
D48-9 (IG2D) - chassis ground	Engine switch on (ACC) →Engine switch on (IG)	1V or less →9 V or more

NG → Replacement of the collation ECM (smart key ECM ASSY)

OK

Complete (Possibly temporary poor contact)

DTC	B2274	ACC circuit abnormal

Circuit description

This DTC is output when a problem is detected in the ACC output circuit between the ACC output terminal of the collation ECM (smart key ECM ASSY) and the ACC relay.

NOTE:

If you remove and then reconnect the battery cable, the power returns to the mode it was before you removed the cable.

DTC No.	DTC detection status	Faulty part	DTC Output Confirmation Operation
B2274	There is a problem in the ACC relay drive circuit in the vehicle exterior circuit or in the collation ECM (smart key ECM ASSY) (1 trip detection logic *1). NOTE: If the terminal ACCD voltage is not the standard value, the system can cause problems.	• AM2 No. 2 fuse • Instrument panel junction block ASSY (ACC relay) • Collation ECM (smart key ECM ASSY) • Wiring harness or connector	Turn the engine switch on (ACC) or on (IG) and wait 10 seconds, turn the engine switch off, and wait 10 seconds. NOTE: To turn the engine switch on (ACC), hold the key, move the shift lever in P or N *2, remove your foot from the brake pedal *2 or the clutch *3, and press the engine switch 2 times.

*1: The code is output only when the problem is found and the engine switch is on (IG).

*2: With automatic transmission

*3: With manual transmission

Vehicle status and failsafe upon detection

Vehicle status when a problem is detected	Failsafe function when a problem is detected
• If a problem occurs when the relay is stuck on, even after you turn the power off, the ACC relay will not turn off. • If a problem occurs when the relay is stuck off, even after you turn the engine switch on, the ACC relay will not turn on. NOTE: You can turn the engine switch on (IG), and start the engine.	-

Related [Data monitor] and [Active Test]

DTC No.	[Data monitor] item	[Active Test] item
B2274	Power supply • [ACC relay monitor] Engine • [Ignition]	-

Circuit figure

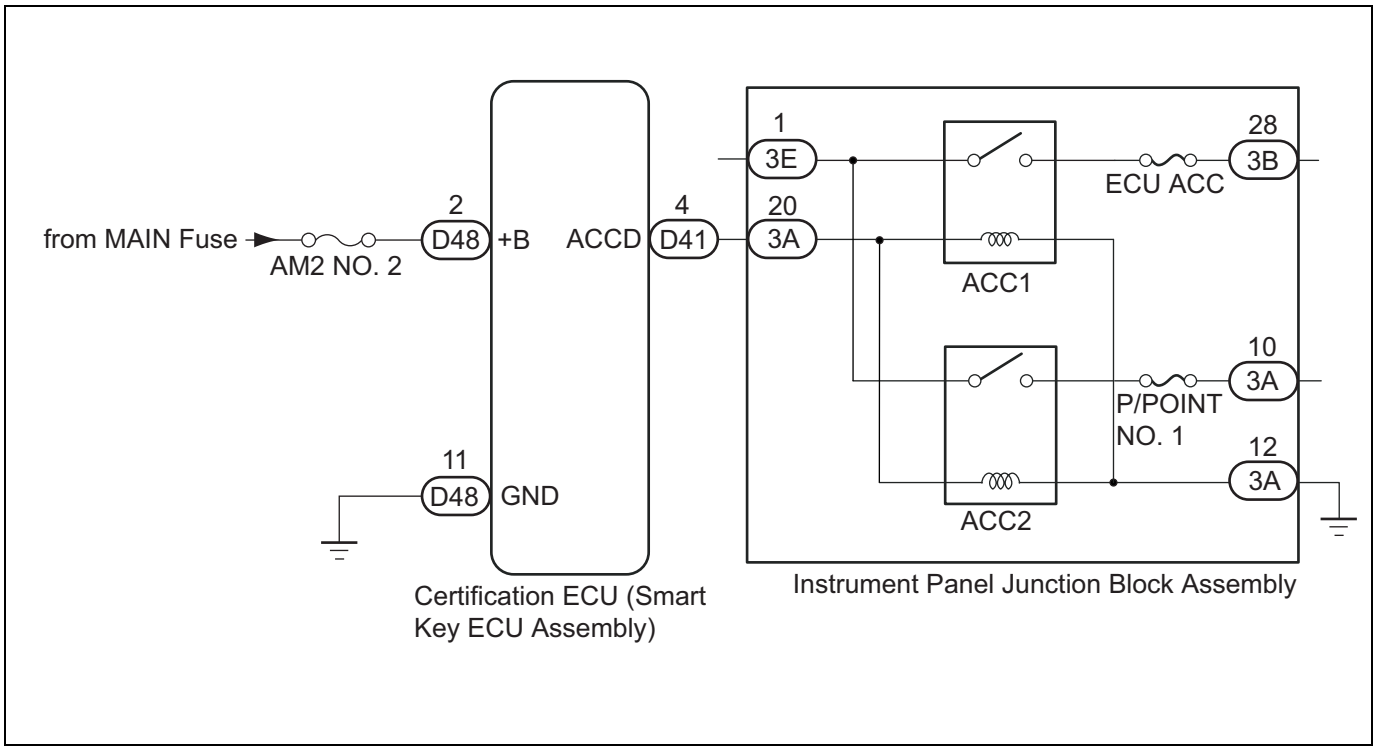

TD

Inspection steps

CAUTION:

- The entry & start system has functions that use the CAN communication. Before performing troubleshooting, perform the inspection in "How to troubleshoot", and check that there are no communication problems. (Refer to TD - 146)
- Before replacing the collation ECM (smart key ECM ASSY), refer to "entry & start system (entry function)". (Refer to TD - 5)
- After repair, perform the [DTC output confirmation operation], and check that the DTC is not output again.
- Before performing the following inspection steps, check the fuses related to this system.

1	Checking the harnesses and connectors (power supply) (Refer to TD - 176)

NG → Repair or replacement of the harnesses or connectors of the circuits that connect to the power source

OK

2	Checking the harnesses and connectors (grounding) (Refer to TD - 176)

NG → Repair or replacement of the harnesses or connectors

OK

3	Checking the harnesses and connectors (instrument panel junction block ASSY - collation ECM)

(1) Remove the D41 connector of the collation ECM (smart key ECM ASSY).
(2) Remove the 3A connector of the instrument panel junction block ASSY.
(3) Measure the resistance according to the following table.

Resistance

Inspection terminals	Inspection conditions	Standard value
D41-4 (ACCD) - 3A-20	Always	1 Ωor less
3A-12 - Chassis ground	Always	1 Ωor less
D41-4 (ACCD) - chassis ground	Always	10 kΩ or more

NG → Repair or replacement of the harnesses or connectors

OK

4	Unit inspection of the instrument panel junction block ASSY (ACC relay)

(1) Remove the instrument panel junction block ASSY.
(2) Remove the main body ECM (multiplex network body ECM) from the instrument panel junction block ASSY.
(3) Measure the resistance according to the following table.

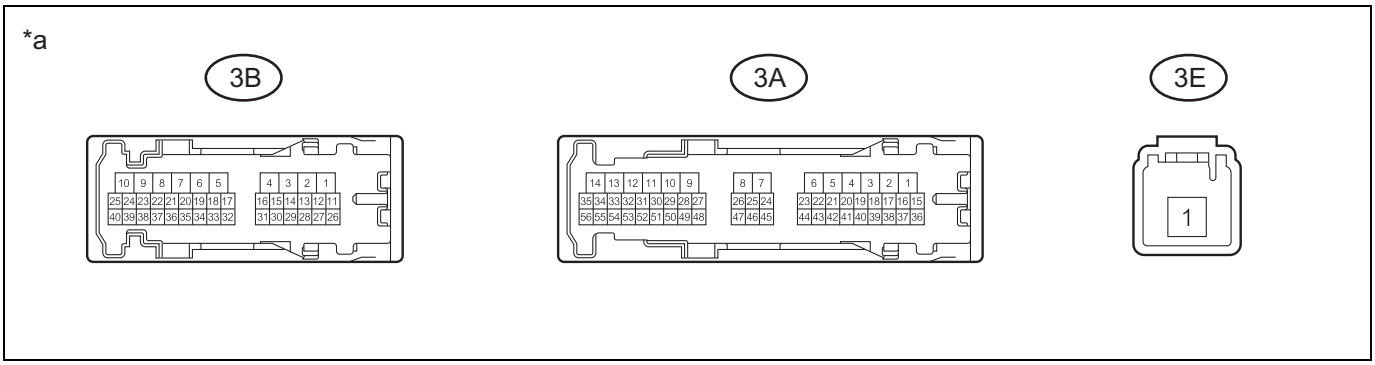

Captions in illustration

*a	Connector not connected (Instrument panel junction block ASSY)	-	-

Resistance

Inspection terminals	Inspection conditions	Standard value
3E-1 - 3B-28	When there is no battery voltage	10 kΩ or more
	When battery voltage is applied to terminals 3A-20 and 3A-12	1 Ωor less
3E-1 - 3A-10	When there is no battery voltage	10 kΩ or more
	When battery voltage is applied to terminals 3A-20 and 3A-12	1 Ωor less

NG → Replacement of the instrument panel junction block ASSY

OK

5	Unit inspection of the collation ECM (smart key ECM ASSY)

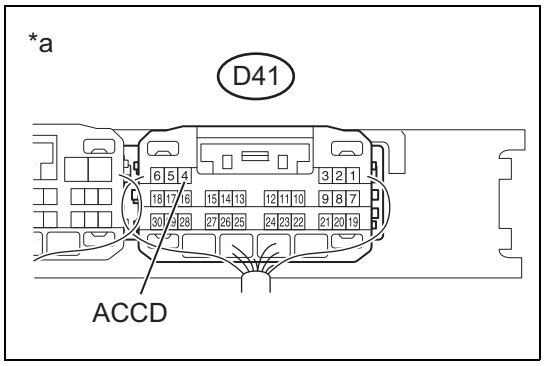

(1) Install the main body ECM (multiplex network body ECM) on the instrument panel junction block ASSY.
(2) Install the instrument panel junction block ASSY.
(3) Reconnect the D41 connector of the collation ECM (smart key ECM ASSY).
(4) Measure the voltage according to the following table.

Voltage

Inspection terminals	Inspection conditions	Standard value
D41-4 (ACCD) - chassis ground	Engine switch off →Engine switch on (ACC)	1V or less →8.5V or more

Captions in illustration

*a	Connector connected (Collation ECM (smart key ECM ASSY))

NG → Replacement of the collation ECM (smart key ECM ASSY)

OK

Complete (Possibly temporary poor contact)

TD

DTC	B2275	STSW circuit abnormal

Circuit description

This DTC is output when a circuit problem is detected in the engine start permission signal output circuit of the collation ECM (smart key ECM ASSY), or when a malfunction is detected in the exterior engine start permission signal.

NOTE:

If you remove and then reconnect the battery cable, the power returns to the mode it was before you removed the cable.

DTC No.	DTC detection status	Faulty part	DTC Output Confirmation Operation
B2275	• A circuit problem is detected (1-trip detection logic *) in the engine start permission output circuit of the collation ECM (smart key ECM ASSY). • Problem in the external engine start permission signal (1 trip detection)	• Collation ECM (smart key ECM ASSY) • EFI system • Wiring harness or connector	Start the engine.

*: The code is output only when the problem is found and the engine switch is on (IG).

Vehicle status when a problem is detected	Failsafe function when a problem is detected
The engine does not start.	-

Related [Data monitor] and [Active Test]

DTC No.	[Data monitor] item	[Active Test] item
B2275	-	-

Circuit figure

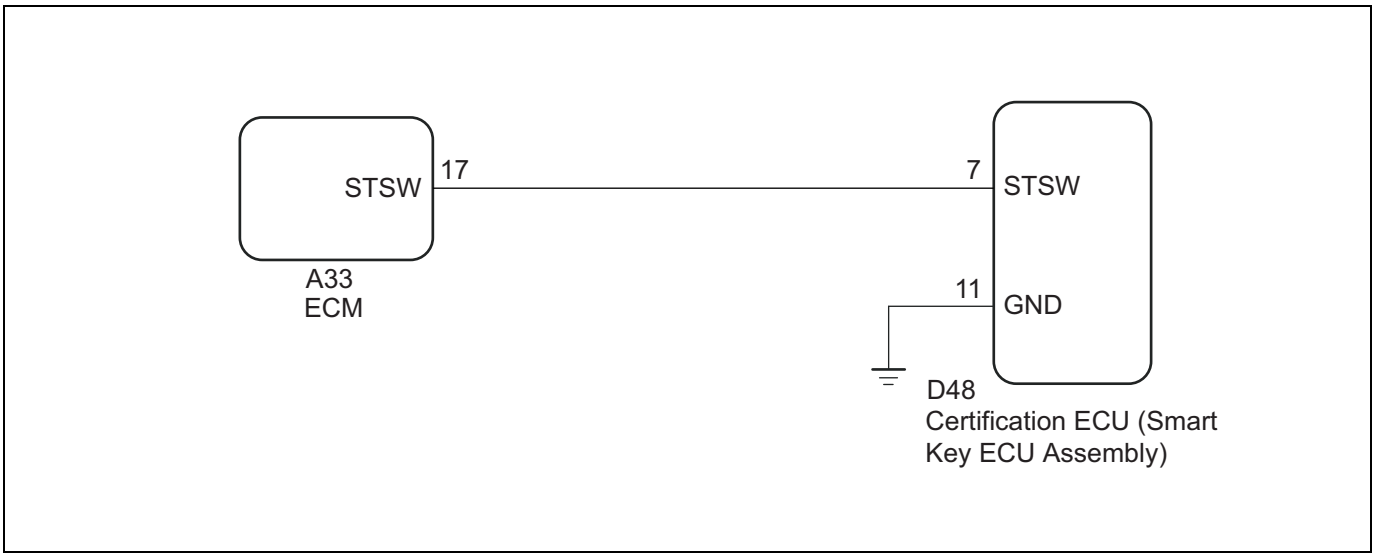

TD

Inspection steps

CAUTION:

- The entry & start system has functions that use the CAN communication. Before performing troubleshooting, perform the inspection in "How to troubleshoot", and check that there are no communication problems. (Refer to TD - 146)
- Before replacing the collation ECM (smart key ECM ASSY), refer to "entry & start system (entry function)". (Refer to TD - 5)
- After repair, perform the [DTC output confirmation operation], and check that the DTC is not output again.
- Before performing the following inspection steps, check the fuses related to this system.

1	Checking the harnesses and connectors (collation ECM - ECM)

(1) Remove the D48 connector of the collation ECM (smart key ECM ASSY).
(2) Remove the A33 connector of the ECM.
(3) Measure the resistance according to the following table.

Resistance

Tester conditions	Inspection conditions	Standard value
D48-7 (STSW) - A33-17 (START)	Always	1 Ωor less
D48-11 (GND) - Chassis ground	Always	1 Ωor less
D48-7 (STSW) - chassis ground	Always	10 kΩ or more

NG → Repair or replacement of the harnesses or connectors

OK

2	Unit inspection of the collation ECM (smart key ECM ASSY)

(1) Reconnect the D48 connector of the collation ECM (smart key ECM ASSY).
(2) Reconnect the A33 connector of the ECM.

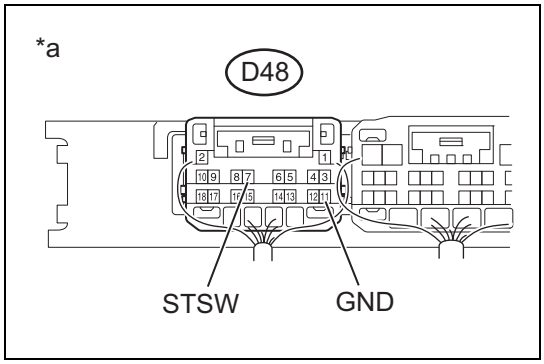

(3) Measure the voltage according to the following table.

Voltage

Inspection terminals	Inspection conditions	Standard value
D48-7 (STSW) - D48-11 (GND)	Depress the brake pedal *1 or the clutch pedal *2 and press the engine switch (starter on)→ After approx. 1 second, the engine switch is released (starter off)	2V or less →9 V or more

*1: With automatic transmission

*2: With manual transmission

Captions in illustration

*a	Connector connected (Collation ECM (smart key ECM ASSY))

Measure the voltage according to the following table.

NG → Replacement of the collation ECM (smart key ECM ASSY)

OK

Proceed to the "EFI system" ("How to troubleshoot")

TD

DTC B2276 ACCR signal abnormal

Circuit description

This DTC is output when an input problem occurs in the ACC relay cut input signal circuit of the collation ECM (smart key ECM ASSY).

NOTE:

If you remove and then reconnect the battery cable, the power returns to the mode it was before you removed the cable.

DTC No.	DTC detection status	Faulty part	DTC Output Confirmation Operation
B2276	A problem is detected (1-trip detection logic *) in the ACC relay cut input signal circuit of the collation ECM (smart key ECM ASSY).	• Collation ECM (smart key ECM ASSY) • EFI system • Wiring harness or connector	Start the engine.

*: The code is output only when the problem is found and the engine switch is on (IG).

Vehicle status when a problem is detected	Failsafe function when a problem is detected
• When the engine starts, the ACC relay is not cut. • The start ASSY turns slowly.	-

Related [Data monitor] and [Active Test]

DTC No.	[Data monitor] item	[Active Test] item
B2276	-	-

Circuit figure

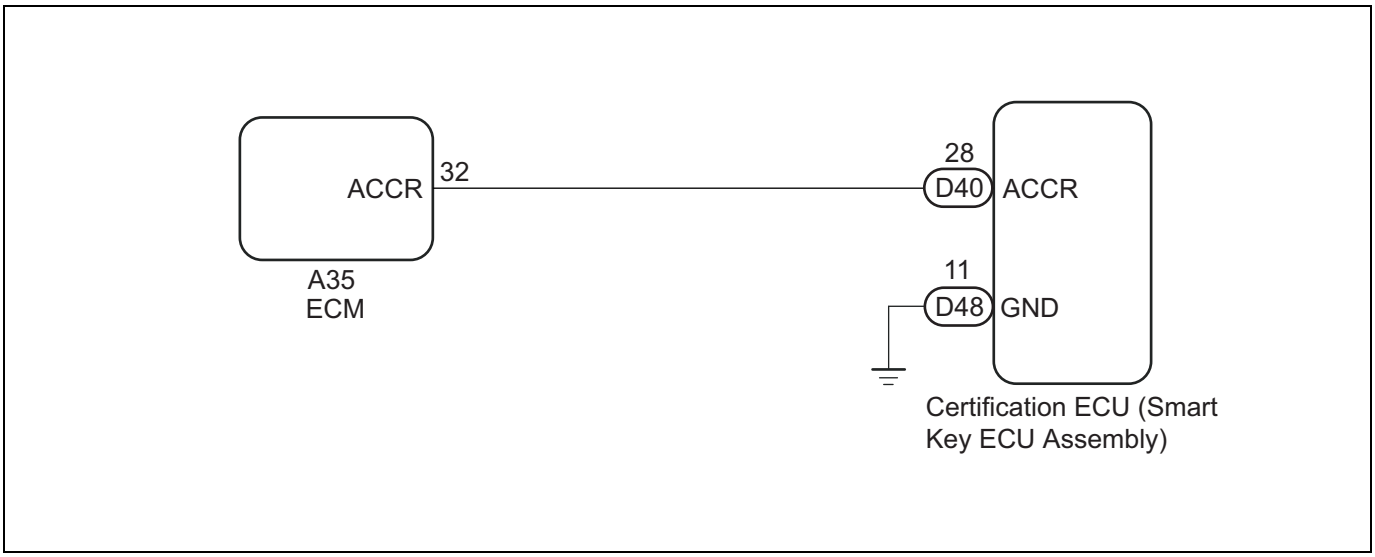

TD

Inspection steps

CAUTION:

- The entry & start system has functions that use the CAN communication. Before performing troubleshooting, perform the inspection in "How to troubleshoot", and check that there are no communication problems. (Refer to TD - 146)
- Before replacing the collation ECM (smart key ECM ASSY), refer to "entry & start system (entry function)". (Refer to TD - 5)
- After repair, perform the [DTC output confirmation operation], and check that the DTC is not output again.
- Before performing the following inspection steps, check the fuses related to this system.

1	Checking the harnesses and connectors

(1) Remove the D40 and the D48 connectors of the collation ECM (smart key ECM ASSY).
(2) Remove the A35 connector of the ECM.
(3) Measure the resistance according to the following table.

Resistance

Inspection terminals	Inspection conditions	Standard value
D40-28 (ACCR) - A35-32(ACCR)	Always	1 Ωor less
D48-11 (GND) - Chassis ground	Always	1 Ωor less
D40-28 (ACCR) - chassis ground	Always	10 kΩ or more

NG → Replacement of the harnesses or connectors

OK

2	Unit inspection of the collation ECM (smart key ECM ASSY)

(1) Reconnect the D41, D40, and D48 connectors of the collation ECM (smart key ECM ASSY).
(2) Reconnect the A35 connector of the ECM.
(3) Measure the voltage according to the following table.

*a

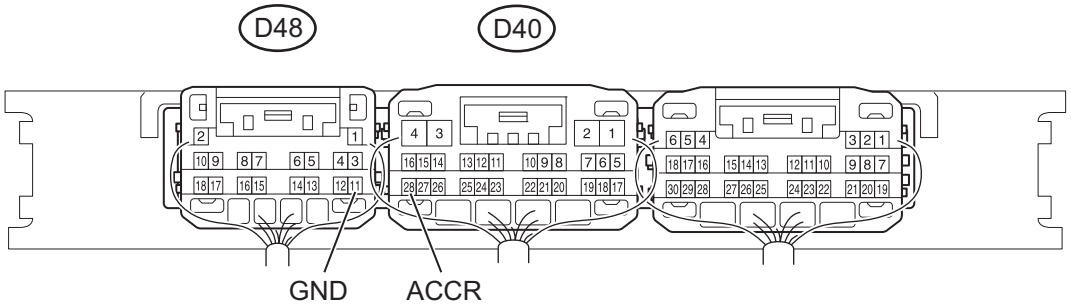

Captions in illustration

*a	Connector connected (Collation ECM (smart key ECM ASSY))	-	-

TD

Voltage

Inspection terminals	Inspection conditions	Standard value
D40-28 (ACCR) - D48-11 (GND)*1	Depress the brake pedal *1 or the clutch pedal *2 and press the engine switch (starter on)→ After approx. 1 second, the engine switch is released (starter off)	2V or less →9 V or more

*1: With automatic transmission
*2: With manual transmission

NG → Replace the ECM

OK

Replacement of the collation ECM (smart key ECM ASSY)

DTC	B2277	Submerging circuit abnormal

Circuit description
This DTC is output when a problem is detected in the water-exposure detection circuit of the smart key ECM ASSY (collation ECM).

DTC No.	DTC detection status	Faulty part	DTC Output Confirmation Operation
B2277	The water-exposure detection circuit of the collation ECM (smart key ECM ASSY) detects exposure to water (1-trip detection logic*).	• Water-exposure of the collation ECM (smart key ECM ASSY) • Collation ECM (smart key ECM ASSY)	After connecting the battery cable, wait 300 seconds.

*: The code is output only when the problem is found and the engine switch is on (IG).
Vehicle status and failsafe function when a problem is detected

Vehicle status when a problem is detected	Failsafe function when a problem is detected
Cannot turn off or start the engine.	Changing the power mode to on (IG) and driving the starter relay is prohibited.

Related [Data monitor] and [Active Test]

DTC No.	[Data monitor] item	[Active Test] item
B2277	-	-

Inspection steps

CAUTION:

- The entry & start system has functions that use the CAN communication. Before performing troubleshooting, perform the inspection in "How to troubleshoot", and check that there are no communication problems. (Refer to TD - 146)
- Before replacing the collation ECM (smart key ECM ASSY), refer to "entry & start system (entry function)". (Refer to TD - 5)
- After repair, perform the [DTC output confirmation operation], and check that the DTC is not output again.

NOTE:

Before performing troubleshooting, check the collation ECM (smart key ECM ASSY) for any damage due to water. If symptoms of damage from water are found, replace the collation ECM (smart key ECM ASSY), and take countermeasures against the cause of the damage from water.

1	Checking for damage from water

TD

(1) Check for any evidence of water on the collation ECM (smart key ECM ASSY), surrounding parts, and wiring harnesses.

Result

Result	Go to
There is evidence of water.	A
There is no evidence of water.	B

B → Replacement of the collation ECM (smart key ECM ASSY)

A

Taking the appropriate countermeasures against damage from water, and replacement the collation ECM (smart key ECM ASSY).

DTC	B2282	Vehicle speed signal abnormal

DTC	B2283	Vehicle speed sensor fault detection

Circuit description

DTC B2282 is output when a mismatch is detected between the vehicle speed signal via the direct line sent from the brake actuator ASSY (skid control ECM) and the vehicle speed signal sent via the CAN communication.

DTC B2283 is output when a problem is detected in the speed sensor.

NOTE:

If you remove and then reconnect the battery cable, the power returns to the mode it was before you removed the cable.

DTC No.	DTC detection status	Faulty part	DTC Output Confirmation Operation
B2282	This is output when a mismatch is detected between the vehicle speed signal via the direct line sent from the brake actuator ASSY (skid control ECM) and the vehicle speed signal sent via the CAN communication.	• AM2 No. 2 fuse • Vehicle stability control system • Collation ECM (smart key ECM ASSY) • Wiring harness or connector	Drive the vehicle at 25 km/h {16 MPH} or faster for 20 seconds, then drive the vehicle at 5 km/h {3 MPH} for 20 seconds.

DTC No.	DTC detection status	Faulty part	DTC Output Confirmation Operation
B2283	Meet any of these conditions (a speed sensor problem is detected) (1-trip detection logic*1): • Vehicle speed signal error detection 1: Major decrease of the vehicle speed is detected. • Vehicle speed signal error detection 2: A problem was detected through engine speed detection.	• AM2 No. 2 fuse • Vehicle stability control system • Collation ECM (smart key ECM ASSY) • Wiring harness or connector	In IG ON, any of the following conditions is established. • Direct connection vehicle speed pulse showing 50 km/h or more continues for 10 seconds, then the CAN and direct connection speed pulses both turn to 0 km/h within 1 second. • In an AT vehicle, CAN and the direct connection show 0 km/h, the engine speed (according to the direct connection) is 2000 r/min or more, the shift lever is not in P or N, and ACCR is not in LOW level for 300 seconds. • In an MT vehicle, CAN and the direct connection show 0 km/h, the engine speed (according to the direct connection) is 2000 r/min or more, the N position for the shift lever is OFF, the clutch switch is OFF, and ACCR is in the LOW level for 300 seconds.

*1: The code is output only when the problem is found and the engine switch is on (IG).

Vehicle status and failsafe function when a problem is detected

DTC No.	Vehicle status when a problem is detected	Failsafe function when a problem is detected
B2282	• If a problem is found in the signal via the direct line or the CAN communication, and if the vehicle speed is not displayed, there is no effect on vehicle operations. • If a problem is found in the signal from the direct line or the CAN communication, and if the vehicle running is displayed, the power mode cannot be switched from on (IG) to off.	-
B2283	• If you press the engine switch when the vehicle is running, the engine switch will turn off (the engine stops). • If the electrical key transmitter SUB-ASSY is in the vehicle interior, even if you perform engine start operations, the engine will not start.	Steering lock motor operations are prohibited.

Related [Data monitor] and [Active Test]

DTC No.	[Data monitor] item	[Active Test] item
B2282 B2283	Power supply • [Vehicle speed signal] • [Engine Speed] • [Power supply status] Engine • [Engine Speed] ABS-VSC-TRC • [Wheel speed]	-

TD

Circuit figure

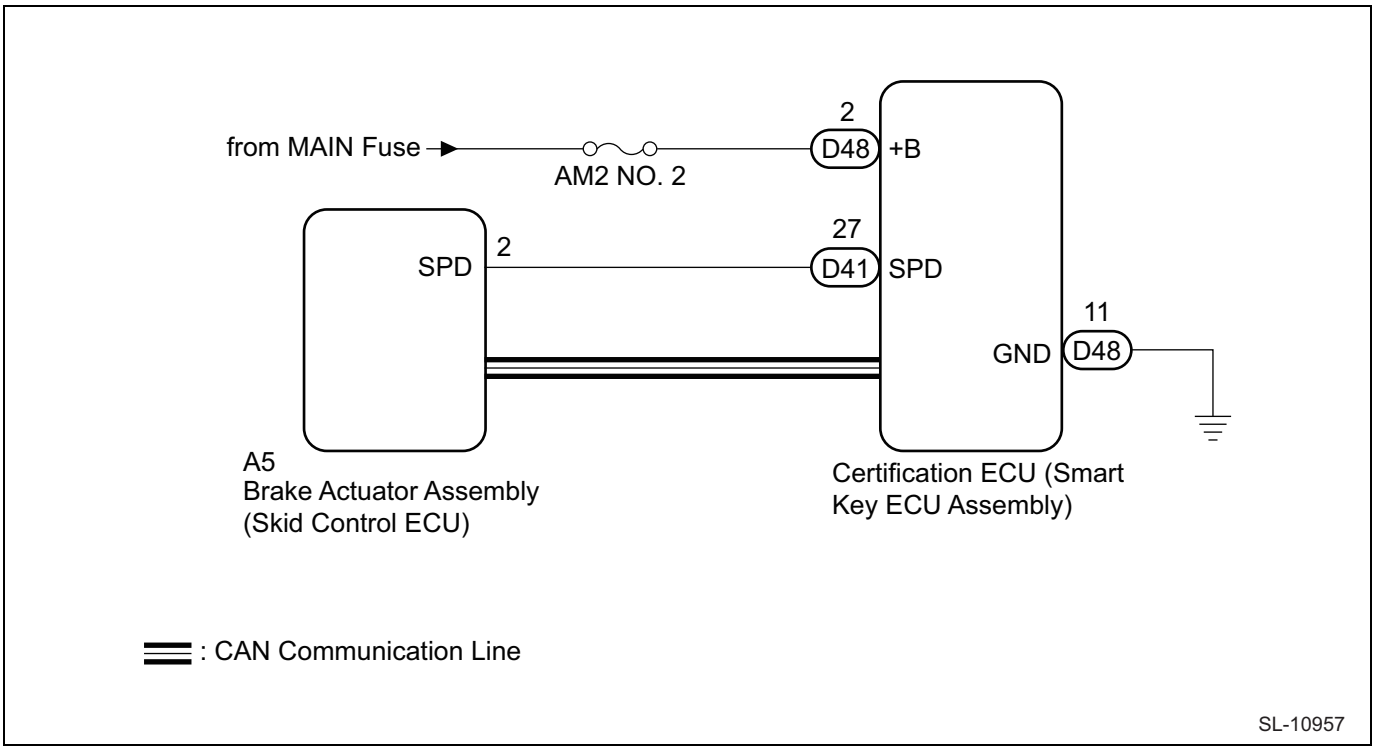

TD

Inspection steps

CAUTION:

- The entry & start system has functions that use the CAN communication. Before performing troubleshooting, perform the inspection in "How to troubleshoot", and check that there are no communication problems. (Refer to TD - 146)
- Before replacing the collation ECM (smart key ECM ASSY), refer to "entry & start system (entry function)". (Refer to TD - 5)
- After repair, perform the [DTC output confirmation operation], and check that the DTC is not output again.
- Before performing the following inspection steps, check the fuses related to this system.

1	Reading the values using the SSM4 (vehicle speed)

(1) Connect the SSM4 to the DLC3.
(2) Turn the ignition switch to ON.
(3) Turn on the SSM4.
(4) Enter the following menus: [Brake Control System] →[Data monitor]
(5) Based on the contents of the SSM4 display, read the [Data monitor].

ABS/VSC/TRC

Tester display	Measurement items / range	Normal condition	Notes for diagnosis
[Wheel speed]	Vehicle speed / hour: 0 km/h {0 MPH}, maximum speed: 255 km/h {158MPH}	Almost the same speed as the actual vehicle speed (speedometer tester)	-

Criteria: [Data monitor] is almost the same as the actual vehicle speed.

NG → VSC system (How to troubleshoot) (Refer to ME - 19)

OK

2	Reading the values using the SSM4 (vehicle speed signal)

(1) Connect the SSM4 to the DLC3.
(2) Turn the ignition switch to ON.

(3) Turn on the SSM4.
(4) Input the following menus: [Keyless Access(Power Supply ECM)] →[Data monitor]
(5) Based on the contents of the SSM4 display, read the [Data monitor].

Power source control

Tester display	Measurement items / range	Normal condition	Notes for diagnosis
[Vehicle speed signal]	Vehicle in running or stopped status / [stopped] or [rotating]	[Rotating] Vehicle is running at a speed of 5 km/h {3 MPH} or faster. Stop: The vehicle is stopped.	-

Criteria: Based on the vehicle speed, [Stop] (the vehicle is stopped) or [Driving] (the vehicle is running) is displayed on the screen.

NG → Go to Step 3.

OK

Proceed to the "vehicle stability control system" ("How to troubleshoot")

TD

3	Checking the harnesses and connectors (power supply) (Refer to TD - 176)

NG → Repair or replacement of the harnesses or connectors of the circuits that connect to the power source

OK

4	Checking the harnesses and connectors (grounding) (Refer to TD - 176)

NG → Repair or replacement of the harnesses or connectors

OK

5	Checking the harnesses and connectors (collation ECM - combination meter ASSY)

(1) Remove the D41 connector of the collation ECM (smart key ECM ASSY).
(2) Disconnect the connector A5 of the brake actuator ASSY (skid control ECM).
(3) Measure the resistance according to the following table.

Resistance

Inspection terminals	Inspection conditions	Standard value
D41-27 (SPD) - A5-2 (SPD)	Always	1 Ωor less
D41-27 (SPD) - chassis ground	Always	10 kΩ or more

NG → Repair or replacement of the harnesses or connectors

OK

6	Unit inspection of the collation ECM (smart key ECM ASSY)

*a

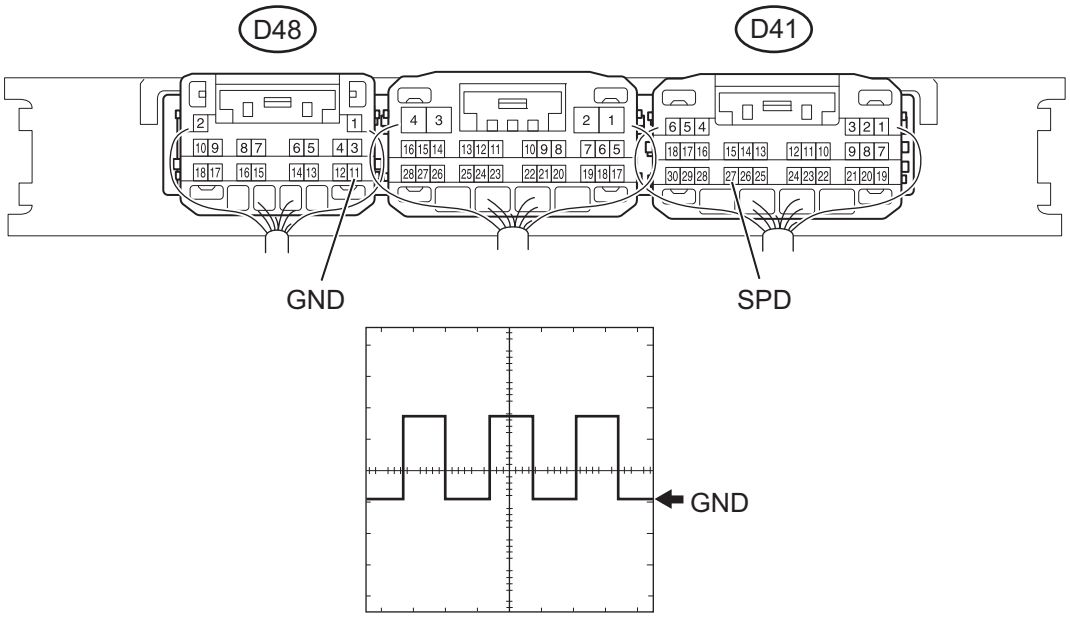

Captions in illustration

*a	Connector connected (Collation ECM (smart key ECM ASSY))	-	-

(1) Reconnect the connector A5 of the brake actuator ASSY (skid control ECM).
(2) Reconnect the D41 connector of the collation ECM (smart key ECM ASSY).
(3) Using an oscilloscope, check the waveform of the vehicle speed input signal sent from the combination meter of the collation ECM (smart key ECM ASSY) terminal.
    (a) Refer to the table below and check the signal waveform.

Item	Contents
Tester connection	D41-27 (SPD) - D48-11 (GND)
Tool setting	5 V / DIV., 100 ms. / DIV.
Conditions	The engine switch on (IG), the vehicle running at approx. 5 km/h {3 MPH}

Criteria: The waveform resembles the waveform shown in the figure.

NOTE:
If the system is functioning properly, 4 pulses are generated for each wheel revolution. The faster the vehicle speed, the shorter the width shown in the figure (A) becomes.

NG	Proceed to the "vehicle stability control system" ("How to troubleshoot")

OK

Replacement of the collation ECM (smart key ECM ASSY)

DTC	B2284	Brake Signal (Cable-Information does not match to BEAN-Information)

Circuit description

The collation ECM (smart key ECM ASSY) receives brake signal information from 2 sources. It receives signals from the stop light ASSY via the direct line, and receives signals from the ECM via CAN communication. If the information sent from these 2 sources are different, this DTC is output.

NOTE:

If you remove and then reconnect the battery cable, the power returns to the mode it was before you removed the cable.

DTC No.	DTC detection status	Faulty part	DTC Output Confirmation Operation
B2284	The brake signal information via the direct line and the brake signal information sent from the ECM via CAN communication do not match (1-trip detection logic*).	• AM2 No. 2 fuse • Stop fuse • Collation ECM (smart key ECM ASSY) • EFI system • Wiring harness or connector	Connect the cable to the battery ground terminal (-), and after 20 seconds or more since turning the brake off, turn it on again and wait 20 seconds or more.

*: The code is output only when the problem is found and the engine switch is on (IG).

Vehicle status and failsafe function when a problem is detected

Vehicle status when a problem is detected	Failsafe function when a problem is detected
If the electrical key transmitter SUB-ASSY is in the vehicle interior, even if you perform engine start operations, the engine will not start (the entry key indicator on the combination meter ASSY will not light up green). However, if you press engine switch for a certain period of time after the power mode is turned on (ACC), you can start the engine. • If a problem is found in the direct line [ON], even if the brake is off, you can press the engine switch and start the engine. • If a problem is found in the direct line [OFF], even if the brake is on, you cannot press the engine switch and start the engine.	-

Related [Data monitor] and [Active Test]

DTC No.	[Data monitor] item	[Active Test] item
B2284	Power supply • [Stop Light Switch 1] Engine • [Brake Switch 1]	-

TD

Circuit figure

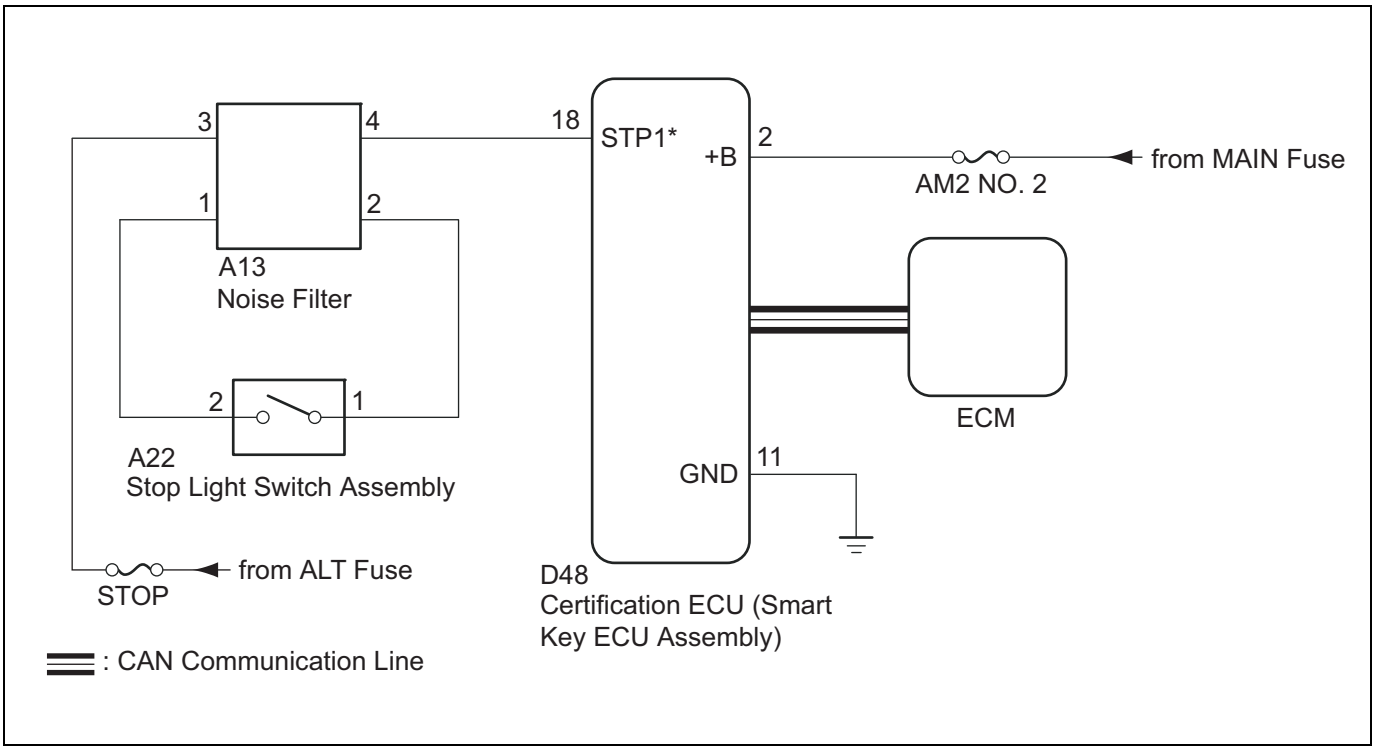

TD

Inspection steps

CAUTION:

- The entry & start system has functions that use the CAN communication. Before performing troubleshooting, perform the inspection in "How to troubleshoot", and check that there are no communication problems. (Refer to TD - 146)
- Before replacing the collation ECM (smart key ECM ASSY), refer to "entry & start system (entry function)". (Refer to TD - 5)
- After repair, perform the [DTC output confirmation operation], and check that the DTC is not output again.
- Before performing the following inspection steps, check the fuses related to this system.

1	Reading the values using the SSM4 (stop light switch ASSY)

(1) Connect the SSM4 to the DLC3.
(2) Turn the ignition switch to ON.
(3) Turn on the SSM4.
(4) Input the following menus: [Keyless Access(Power Supply ECM)] →[Data monitor]
(5) Based on the contents of the SSM4 display, read the [Data monitor].

Power source control

Tester display	Measurement items / range	Normal condition	Notes for diagnosis
[Stop Light Switch 1]	Brake pedal status / [OFF] or [ON]	OFF: The brake pedal is not being depressed. ON: The brake pedal is being depressed.	• Using this item, determine if there is any problem with the stop light switch. • When this item is [OFF], the engine will not start. • If there is a problem caused by this item, if you press the engine switch for a certain amount of time, you can start the engine.

Criteria: "ON" (depressing the brake pedal) and "OFF" (your foot removed from the brake pedal) are displayed on the screen.

Result

Result	Go to
NG	A
OK	B

B → See the EFI system

A

2	Checking the harnesses and connectors (power supply) (Refer to TD - 176)

NG → Repair or replacement of the harnesses or connectors of the circuits that connect to the power source

OK

3	Checking the harnesses and connectors (grounding) (Refer to TD - 176)

NG → Repair or replacement of the harnesses or connectors

OK

4	Checking the harnesses and connectors (collation ECM (smart key ECM ASSY) - stop light switch ASSY)

(1) Remove the D48 connector of the collation ECM (smart key ECM ASSY).
(2) Remove the A22 connector of the stop light switch ASSY.
(3) Measure the resistance according to the following table.

Resistance

Inspection terminals	Inspection conditions	Standard value
D48-18 (STP1) - A13-4	Always	1 Ωor less
D48-18 (STP1) - chassis ground	Always	10 kΩ or more

(4) Reconnect the A22 connector of the stop light switch ASSY.

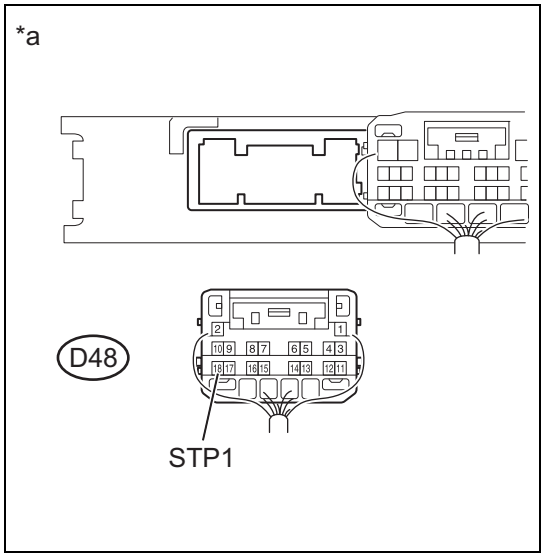

(5) Measure the voltage according to the following table.
Voltage

Inspection terminals	Inspection conditions	Standard value
D48-18 (STP1) - chassis ground	The brake pedal is not being depressed.	1 V or less
	The brake pedal is being depressed.	9V or more

Captions in illustration

*a	Rear side of the wiring harness connector (Collation ECM (smart key ECM ASSY))

NG → Repair or replacement of the harnesses or connectors

OK

TD

Replacement of the collation ECM (smart key ECM ASSY)

DTC	B2285	Steering lock position signal abnormal

Circuit description

This DTC is output when the steering lock position signal sent from the lock actuator ASSY (steering lock ECM) via the direct line and the steering lock position signal sent via the LIN communication do not match.

NOTE:

If you remove and then reconnect the battery cable, the power returns to the mode it was before you removed the cable.

DTC No.	DTC detection status	Faulty part	DTC Output Confirmation Operation
B2285	The steering lock position signal sent by the steering lock ECM via the direct line and the steering lock position signal sent via the LIN communication (1-trip detection logic*) do not match.	• AM2 No. 2 fuse • Steering lock actuator ASSY (steering lock ECM) • Collation ECM (smart key ECM ASSY) • Wiring harness or connector	Remove the cable from the battery ground terminal (-), and after waiting 30 seconds, reconnect the cable to the battery ground terminal (-). Turn off the engine, wait 40 seconds (the steering is locked), turn the engine switch on (ACC) (the steering is unlocked), and wait 40 seconds or more.

*: The code is output only when the problem is found and the engine switch is on (IG).

Vehicle status and failsafe function when a problem is detected

Vehicle status when a problem is detected	Failsafe function when a problem is detected
The engine does not start.	The engine start command is not output.

Related [Data monitor] and [Active Test]

DTC No.	[Data monitor] item	[Active Test] item
B2285	Power supply • [Steering unlock SW] Collation • [Motor power supply short-circuit abnormal] • [Motor Driver Short] • [Lock Bar Stuck Error]	-

Circuit figure

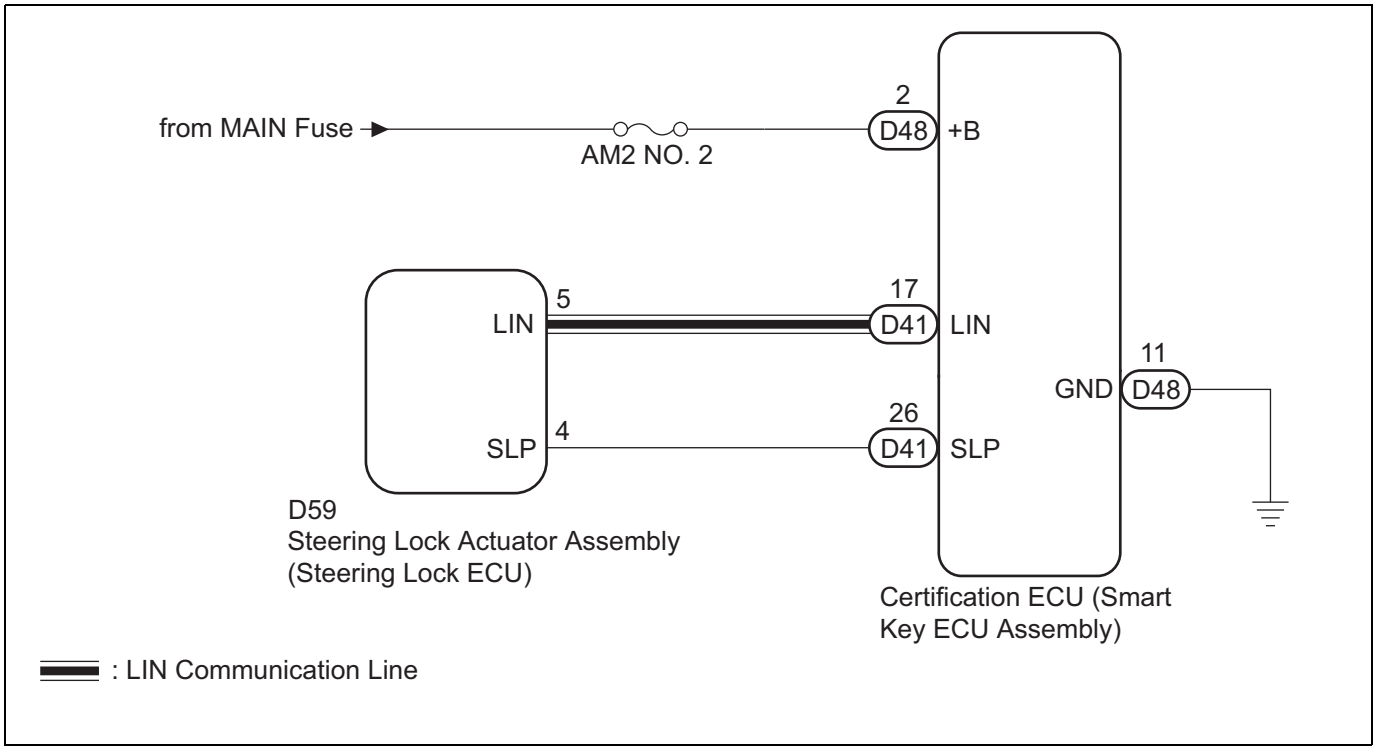

TD

Inspection steps

CAUTION:

- The entry & start system has functions that use the CAN communication. Before performing troubleshooting, perform the inspection in "How to troubleshoot", and check that there are no communication problems. (Refer to TD - 146)
- Before replacing the collation ECM (smart key ECM ASSY) or the steering lock actuator ASSY (steering lock ECM), refer to "entry & start system (entry function)". (Refer to TD - 5)
- After repair, perform the [DTC output confirmation operation], and check that the DTC is not output again.
- Before performing the following inspection steps, check the fuses related to this system.

NOTE:

If the entry key indicator of the combination meter ASSY is lit up green, there is a possibility the steering lock bar is stuck.

1	DTC check (LIN communication system)

(1) Check the output of diagnostic codes from the smart key ECM ASSY (collation ECM).

Criteria: The diagnostic code B2785, which indicates a LIN communication malfunction, is not output.

NOTE:

- If the steering lock is being locked / unlocked, the engine switch will not turn on (IG), and you cannot start the engine.
- If you cannot use the LIN communication, you cannot lock / unlock the steering lock.

NG → See the diagnostic code B2785 (Refer to NW - 17).

OK

2	Reading the values using the SSM4 (steering unlock switch)

(1) Connect the SSM4 to the DLC3.

(2) Turn the ignition switch to ON.

(3) Turn on the SSM4.
(4) Enter the following menus: [Keyless Access(Power Supply ECM)] →[Data monitor]
(5) Based on the contents of the SSM4 display, read the [Data monitor].

Power source control

Tester display	Measurement items / range	Normal condition	Notes for diagnosis
[Steering unlock SW]	Status of the steering lock sensor output from the steering lock actuator ASSY / OFF or ON	OFF: The steering is locked. ON: The steering is unlocked.	• When the shift lever is in P*, if a door is opened or closed with the engine switch off, the steering is locked. • If the electrical key transmitter SUB-ASSY is in the vehicle interior, and the engine switch is on (ACC) or on (IG), the steering is unlocked. • If the steering unlock signal is off, the engine will not start.

*: for automatic transmission

Result

Result	Go to
The [Data monitor] items do not change	A
The [Data monitor] items change	B

B → Replacing the steering lock actuator ASSY (steering lock ECM)

A

3	Checking the harnesses and connectors (power supply) (Refer to TD - 176)

NG → Repair or replacement of the harnesses or connectors of the circuits that connect to the power source

OK

4	Checking the harnesses and connectors (grounding) (Refer to TD - 176)

NG → Repair or replacement of the harnesses or connectors

OK

5	Inspection of the steering lock actuator ASSY (steering lock ECM)

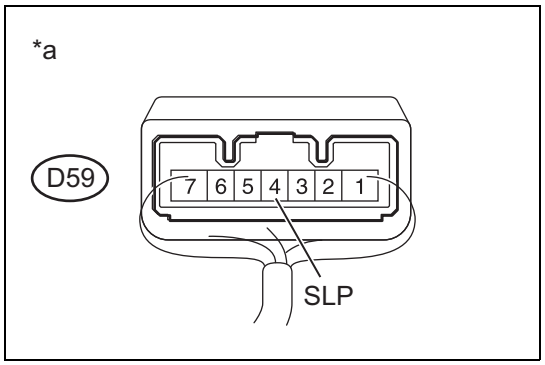

(1) Reconnect the D59 connector of the steering lock actuator ASSY (steering lock ECM).
(2) Measure the resistance according to the following table.
Voltage

Inspection terminals	Inspection conditions	Standard value
Positive (+) tester examination →D59-4 (SLP) Ground (-) tester examination →chassis ground	The steering is locked. *	10 kΩ or more
Positive (+) tester examination →D59-4 (SLP) Ground (-) tester examination →chassis ground	The steering is unlocked. *	1 Ωor less

NOTE:
- *: When the shift lever is in P*, if a door is opened or closed with the engine switch off, the steering wheel is locked. After that, if the engine switch turns on (ACC) or on (IG), the steering wheel is unlocked.
- DTC B2285 may be output if there is a problem in the steering lock ECM (steering lock actuator ASSY). The steering lock position signal and the unlock position signal are sent from the steering lock ECM (steering lock actuator ASSY) to the collation ECM (smart key ECM ASSY).

*: for automatic transmission

Captions in illustration

*a	Connector connected (Steering lock actuator ASSY (steering lock ECM))

Result

Result	Go to
OK	A
NG	B

B → Replacing the steering lock actuator ASSY (steering lock ECM)

A

6	Checking the harnesses and connectors (collation ECM (smart key ECM ASSY) - steering lock actuator ASSY (steering lock ECM))

(1) Remove the D41 connector of the collation ECM (smart key ECM ASSY).
(2) Remove the D59 connector of the steering lock actuator ASSY (steering lock ECM).
(3) Measure the resistance according to the following table.

Resistance

Inspection terminals	Inspection conditions	Standard value
D41-26 (SLP) - D59-4 (SLP1)	Always	1 Ωor less
D41-26 (SLP) - chassis ground	Always	10 kΩ or more

NG → Repair or replacement of the harnesses or connectors

OK

Replacement of the collation ECM (smart key ECM ASSY)

DTC	B2286	Run able Signal (Cable-Information does not match to BEAN-Information)

TD

Circuit description

This DTC is output when the engine speed signal sent from the ECM via the direct line and the engine speed signal sent via the CAN communication do not match.

NOTE:

If you remove and then reconnect the battery cable, the power returns to the mode it was before you removed the cable.

DTC No.	DTC detection status	Faulty part	DTC Output Confirmation Operation
B2286	The engine speed signal sent by the ECM via the direct line and the engine speed signal sent via the CAN communication (1-trip detection logic*) do not match.	• AM2 No. 2 fuse • Collation ECM (smart key ECM ASSY) • EFI system • Wiring harness or connector	Remove the cable from the battery ground terminal (-), and after waiting 30 seconds, reconnect the cable to the battery ground terminal (-). With the engine switch off, wait 20 seconds, and start the engine. With the engine speed at 1000 r/min or faster, do not stop the engine for 20 seconds or more after starting it.

*: The code is output only when the problem is found and the engine switch is on (IG).

Vehicle status and failsafe upon detection

Vehicle status when a problem is detected	Failsafe function when a problem is detected
• If a problem is found in the signal via the direct line or the CAN communication, and if the vehicle speed is not displayed, there is no effect on vehicle operations. (When the engine switch is turned on (IG), the problem is detected.) • If a problem is found in the signal via the direct line or the CAN communication, and if the vehicle is running, you cannot start the engine. However, if you turn the engine switch off, you can start the engine.	• If a problem is found in the signal via the direct line or the CAN communication, and if the vehicle speed is not displayed, there is no effect on vehicle operations. • If a problem is found in the signal via the direct line or the CAN communication, and if the vehicle is running: · If the following conditions are met, the problem can be determined to be in the direct line (TACH), not the CAN communication. – If you press the engine switch and the system controls the engine based on the starter OFF permission flag (perfect injection signal decision) via the CAN communication, the engine stops cranking. – If you press the engine switch and the system controls the engine based on the engine speed via the CAN communication, the engine stops cranking. · If the following conditions are met, the problem can be determined to be in the CAN communication, not the direct line (TACH). – If you press the engine switch and the system controls the engine based on the engine speed sent via the direct line, the engine stops cranking. – If you press the engine switch and the system controls the engine based on the engine speed sent via the direct line, the engine stops cranking. · If the following conditions are met, the problem can be determined to be in both the CAN communication and the direct line (NE). – After you press the engine switch, the engine cranking stops after 6 seconds. – While pressing the engine switch, 30 seconds pass and the engine is still cranking.

Related [Data monitor] and [Active Test]

DTC No.	[Data monitor] item	[Active Test] item
B2286	Power supply • [Engine Speed] Engine • [Engine Speed]	-

Circuit figure

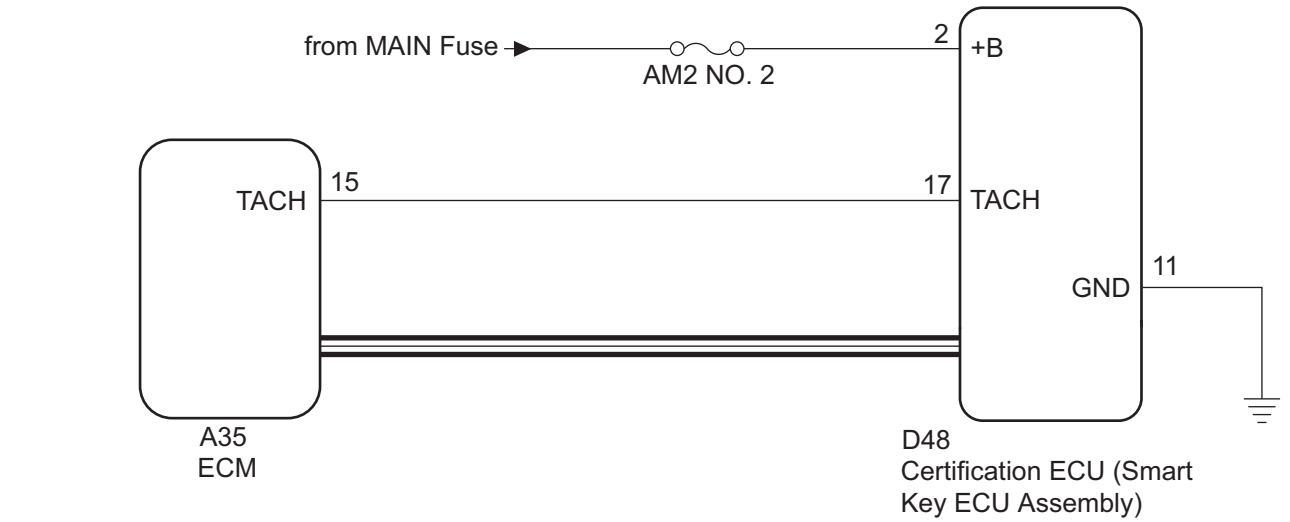

TD

Inspection steps

CAUTION:

- The entry & start system has functions that use the CAN communication. Before performing troubleshooting, perform the inspection in "How to troubleshoot", and check that there are no communication problems. (Refer to TD - 146)
- Before replacing the collation ECM (smart key ECM ASSY), refer to "entry & start system (entry function)". (Refer to TD - 5)
- After repair, perform the [DTC output confirmation operation], and check that the DTC is not output again.
- Before performing the following inspection steps, check the fuses related to this system.

1	Reading the values using the SSM4 (engine speed)

(1) Connect the SSM4 to the DLC3.
(2) Turn the ignition switch to ON.
(3) Turn on the SSM4.
(4) Enter the following menus: [Keyless Access(Power Supply ECM)] →[Data monitor]
(5) Based on the contents of the SSM4 display, read the [Data monitor].

Power source control

Tester display	Measurement items / range	Normal condition	Notes for diagnosis
[Engine Speed]	Engine status / [stopped] or [rotating]	[Stopped] The engine is stopped. Rotating: The engine is turning.	-

(6) Input the following menus: [Engine Control System] →[Data monitor]
(7) Based on the contents of the SSM4 display, read the [Data monitor].

Engine and ECT

Tester display	Measurement items / range	Normal condition	Notes for diagnosis
[Engine Speed]	Engine speed / 0 - 16383 r/min	Changes based on engine speed	-

Criteria: The [Data monitor] items change based on the engine status.

Result

Result	Go to
NG	A
OK	B

B → Proceed to the "EFI system" ("How to troubleshoot")

A

2	Checking the harnesses and connectors (power supply) (Refer to TD - 176)

NG → Repair or replacement of the harnesses or connectors of the circuits that connect to the power source

OK

3	Checking the harnesses and connectors (grounding) (Refer to TD - 176)

NG → Repair or replacement of the harnesses or connectors

OK

4	Checking the harnesses and connectors (collation ECM (smart key ECM ASSY) - ECM)

(1) Remove the D48 connector of the collation ECM (smart key ECM ASSY).
(2) Remove the A35 connector of the ECM.
(3) Measure the resistance according to the following table.

Resistance

Inspection terminals	Inspection conditions	Standard value
D48-17 (TACH) - A35-15 (TACHO)	Always	1 Ωor less
D48-17 (TACH) - chassis ground	Always	10 kΩ or more

NG → Repair or replacement of the harnesses or connectors

OK

5	Unit inspection of the collation ECM (smart key ECM ASSY)

(1) Reconnect the A35 connector of the ECM.
(2) Reconnect the D48 connector of the collation ECM (smart key ECM ASSY).

TD

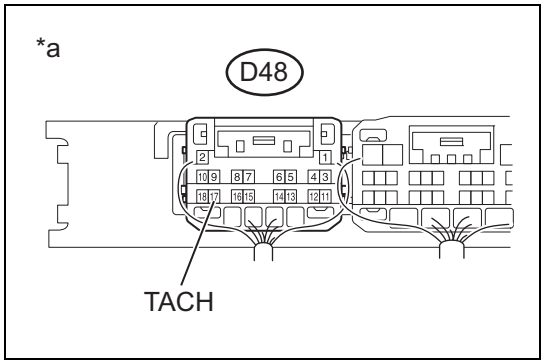

(3) Refer to the table below and check the signal waveform.
Criteria

Inspection terminals	Inspection conditions	Standard value
D48-17 (TACH) - chassis ground	The engine is stopped.	A pulse is not generated.
	The engine is turning.	A pulse is generated.

Captions in illustration

*a	Connector connected (Collation ECM (smart key ECM ASSY))

NG → Proceed to the "EFI system" ("How to troubleshoot")

OK

Replacement of the collation ECM (smart key ECM ASSY)

TD

DTC	U0073	Control Module Communication Bus "A" off
DTC	U0100	Lost Communication With ECM/PCM "A"
DTC	U0101	Lost Communication With TCM
DTC	U0122	Lost Communication With Vehicle Dynamics Control Module
DTC	U0140	Lost Communication With Body Control Module
DTC	U0155	Lost Communication With Instrument Panel Cluster (IPC) Control Module
DTC	U0401	Invalid Data Received From ECM/PCM "A"
DTC	U0422	Invalid Data Received From Body Control Module

Circuit description

These DTCs are output when a CAN communication error is found between the collation ECM (smart key ECM ASSY) and the ECM, the main body ECM, the combination meter ASSY, or the engine stop and start ECM.

NOTE:

After removing the cable, if you reconnect it to the battery ground terminal (-), the power mode returns to the same status it was before you removed the cable.

DTC No.	DTC detection status	Faulty part	DTC Output Confirmation Operation
U0073	Problem in the CAN communication system (1 trip detection)	CAN communication system	Turn the ignition switch to ON and wait 10 seconds or more.
U0100	CAN communication problem between the collation ECM (smart key ECM ASSY) and the ECM (1-trip detection logic*)	ECM	Turn the ignition switch to ON and wait 10 seconds or more.

DTC No.	DTC detection status	Faulty part	DTC Output Confirmation Operation
U0101	CAN communication problem between the collation ECM (smart key ECM ASSY) and the TCM (1-trip detection logic*)	TCM	Turn the ignition switch to ON and wait 10 seconds or more.
U0122	CAN communication problem between the collation ECM (smart key ECM ASSY) and the brake actuator ASSY (1-trip detection logic*)	Brake actuator ASSY	Turn the ignition switch to ON and wait 10 seconds or more.
U0140	CAN communication problem between the collation ECM (smart key ECM ASSY) and the main body ECM (multiplex network body ECM) (1-trip detection logic*)	Main body ECM (multiplex network body ECM)	Turn the ignition switch to ON and wait 10 seconds or more.
U0155	CAN communication problem between the collation ECM (smart key ECM ASSY) and the combination meter ASSY (1-trip detection logic*)	Combination meter ASSY	Turn the ignition switch to ON and wait 10 seconds or more.
U0401	CAN communication problem between the collation ECM (smart key ECM ASSY) and the ECM (1-trip detection logic*)	ECM	Turn the ignition switch to ON and wait 10 seconds or more.
U0422	CAN communication problem between the collation ECM (smart key ECM ASSY) and the main body ECM (multiplex network body ECM) (1-trip detection logic*)	Main body ECM (multiplex network body ECM)	Turn the ignition switch to ON and wait 10 seconds or more.

*: The code is output only when the problem is found and the engine switch is on (IG).

Vehicle status and failsafe function when a problem is detected

DTC code	Vehicle status when a problem is detected	Failsafe function when a problem is detected
U0073	No effect on the vehicle status.	-
U0100	No effect on the vehicle status.	If the following conditions are met, the problem can be determined to be in the CAN communication, not the direct line (TACH). • If you press the engine switch and the system controls the engine based on the engine speed sent via the direct line, the engine stops cranking. • If you press the engine switch and the system controls the engine based on the engine speed sent via the direct line, the engine stops cranking. If the following conditions are met, the problem can be determined to be in both the CAN communication and the direct line (TACH). • After you press the engine switch, the engine cranking stops after 6 seconds. • While pressing the engine switch, 30 seconds pass and the engine is still cranking.
U0101	No effect on the vehicle status.	-
U0122	No effect on the vehicle behavior.	-

DTC code	Vehicle status when a problem is detected	Failsafe function when a problem is detected
U0140	The doors can no longer be locked or unlocked. The warning (wireless buzzer) does not sound.	-
U0155	The warning (meter buzzer) does not sound, and the meter does not issue a warning.	-
U0401	No effect on the vehicle status.	-
U0422	The doors can no longer be locked or unlocked. The warning (wireless buzzer) does not sound.	-

Related [Data monitor] and [Active Test]

Diagnostic codes	[Data monitor] item	[Active Test] item
U0073 U0100 U0101 U0122 U0140 U0155 U0401 U0422	-	-

TD

Inspection steps

CAUTION:

- After repair, perform the [DTC output confirmation operation], and check that the DTC is not output again.

1	DTC check

(1) Record the output DTC. (Refer to TD - 161)

Next

Go to "CAN communication system (How to troubleshoot)" (Refer to NW - 30)

The engine does not start

Circuit description

With the electrical key transmitter SUB-ASSY in the vehicle interior, press the engine switch. The collation ECM (smart key ECM ASSY) receives the signal and the power mode changes. With the shift lever in P *1 or N *1, if you depress the brake pedal *1 or the clutch pedal *2 and press the engine switch, you can start the engine.

*1: With automatic transmission

*2: With manual transmission

NOTE:

- Only if the steering lock is unlocked, even if the shift lever is in the N position, you can start the engine. *
- In IG ON, if the shift lever is in a position other than P, if you press the engine switch, the power changes to ACC ON. After that, if you move the shift lever to P and press the engine switch while depressing the brake pedal, the power changes to IG OFF. *
- If you remove and then reconnect the battery cable, the power returns to the mode it was before you removed the cable.

*: for automatic transmission

Related [Data monitor] and [Active Test]

Diagnostic codes	[Data monitor] item	[Active Test] item
[The engine does not start.]	Power supply • [Stop Light Switch 1*1] • [Steering unlock SW] • [Shift P signal*1] • [Neutral SW/Clutch SW] • [IG2 relay monitor (outside)] • [IG2 relay monitor (inside)] • [ACC relay monitor] • [IG1 relay monitor (outside)] • [IG1 relay monitor (inside)] • [Starter request signal monitor] • [Power supply status] Collation • [Engine start permission request reception status] • [L Code Check] Engine • [Starter Switch] • [Shift SW Status (P Range)*1] • [Shift SW Status (N Range)*1] • [Ignition]	-

Circuit figure

Refer to the circuit figure. (Refer to TD - 139)

Inspection steps

CAUTION:

- Before performing troubleshooting that uses CAN communication of the entry & start system, perform the inspection in "How to troubleshoot", and check that there are no problems in the communication system. (Refer to TD - 146)
- Before replacing the collation ECM (smart key ECM ASSY), the steering lock actuator ASSY (steering lock ECM), or the ID code box (immobilizer code ECM), refer to "entry & start system (entry function)". (Refer to TD - 5)
- If the entry & start system has been disabled by the entry & start system customize settings, enable it before performing troubleshooting. (Refer to TD - 155)
- When replacing the steering lock actuator ASSY (steering lock ECM), before starting the engine, turn the steering wheel left and right, and check that the steering has been unlocked. If for some reason the steering is locked, turn the ignition switch to OFF, open and close a door, press the engine switch and unlock the steering wheel. By doing so, you can prevent starting the engine with the steering still locked.
- After finishing repair, check that the problem doesn't occur again.
- Before performing the following inspection steps, check the fuses related to this system.

NOTE:

With the engine stopped, if you repeatedly depress the brake pedal, the brake booster pressure is released. This increases the force on the brake pedal necessary to make the stop light turn on.*

*: for automatic transmission

1	Checking the battery

(1) Measure the battery voltage.

Voltage: 11 to 14V

NOTE:

- You can check if the vehicle battery is discharged by operating the horn.
- If the battery voltage is 11 V or less, it is necessary to charge or replace the battery.

OK

2	Checking the DTC (all)

(1) Using the SSM4, check the DTC output for all systems.
Criteria: No DTC is output

NG → Proceed to "List of diagnostic codes". (Refer to TD - 172)

OK

3	Checking the waveform environment

(1) If a problem occurs only in certain places or at certain times, it is likely the effect of radio wave interference.
NOTE:
You can check if the problem is due to radio wave interference or not by holding the electrical key transmitter ASSY up to the door control receiver (RF band).

TD

Next

4	Checking the engine switch status

(1) Enter the vehicle interior holding the electrical key transmitter SUB-ASSY.
(2) Move the shift lever in the P position.*
*: for automatic transmission
(3) Depressing the brake pedal *1 or the clutch pedal *2, press the engine switch, and check that the power mode changes.
*1: With automatic transmission
*2: With manual transmission

Result

Result	Go to
The power mode changes in the following way (functioning properly): OFF →ACC ON →IG ON →OFF	A
The power mode does not change to IG ON or ACC ON.	B
The power mode does not change to IG ON but does change to ACC ON.	C
The power mode does not change to ACC ON but does change to IG ON.	D

B → See "the power mode does not change to on (IG and ACC)" (Refer to TD - 219)

C → See "the power mode does not change to on (IG)" (Refer to TD - 227)

D → See "the power mode does not change to on (ACC)" (Refer to TD - 231)

A

5	Checking the cranking function

(1) Enter the vehicle interior holding the electrical key transmitter SUB-ASSY.
(2) Move the shift lever in the P position.*
*: for automatic transmission
(3) Depress the brake pedal *1 or the clutch pedal *2.
*1: With automatic transmission
*2: With manual transmission
(4) If the entry key indicator light of the combination meter ASSY lights up green, press the engine switch, and check that the engine cranks.
Criteria: The engine cranks.

Result

Result	Go to
NG	A
OK	B

TD

B → See the "EFI system" (Symptom table)

A

6	Reading the values using the SSM4 (immobilizer)

(1) Connect the SSM4 to the DLC3.
(2) Turn the ignition switch to ON.
(3) Turn on the SSM4.
(4) Enter the following menus: [Keyless Access(Collation ECM)] →[Data monitor]
(5) Based on the contents of the SSM4 display, read the [Data monitor].

Entry & Start

Tester display	Measurement items / range	Normal condition	Notes for diagnosis
[Immobilizer]	Immobilizer system status, as determined by the collation ECM (smart key ECM ASSY) / [Set] or [Unset]	[Set]: The engine immobilizer is set (starting the engine is prohibited) (IG OFF) [Unset]: The engine immobilizer is not set (starting the engine is permitted) (ACC ON or IG ON)	• If the immobilizer cannot be unset, this item is used to check if the collation ECM (smart key ECM ASSY) is causing the problem. • If this item is [Set], the engine will not start.

Criteria: When the power changes to ACC ON or IG ON, the [Data monitor] item changes to unset.

Result

Result	Go to
OK	A
NG (when there is an ID code box)	B
NG (when there is no ID code box)	C

B → Go to Step 10.

C → Go to Step 11.

A

7	Checking the combination meter ASSY (entry key indicator light)

(1) While carrying the electrical key transmitter SUB-ASSY, enter the vehicle interior, move the shift lever in P *1, and while depressing the brake pedal *1 or the clutch pedal *2, check if the entry key indicator light of the combination meter ASSY changes.
*1: With automatic transmission
*2: With manual transmission
Criteria: The entry key indicator light lights up green.
NOTE:
When performing the above procedure, if the entry key indicator of the combination meter ASSY lights up green, P, N, the brake pedal *1, and the clutch pedal *2 are operating properly.
*1: With automatic transmission
*2: With manual transmission

Result

Result	Go to
OK	A
NG (with automatic transmission)	B
NG (with manual transmission)	C

B → Go to Step 14.

C → Go to Step 20.

A

8	Reading the values using the SSM4 (STARTER REQUEST SIGNAL)

(1) Connect the SSM4 to the DLC3.
(2) Turn the ignition switch to ON.
(3) Turn on the SSM4.
(4) Enter the following menus: [Keyless Access(Power Supply ECM)] →[Data monitor]
(5) Based on the contents of the SSM4 display, read the [Data monitor].

Power source control

Tester display	Measurement items / range	Normal condition	Notes for diagnosis
[Starter request signal monitor]	Status of the engine start command signal 1 / [OFF] or [ON]	OFF: Release the engine switch after approx. 1 second. ON: Move the shift lever in P *1, depress the brake pedal *1 or the clutch pedal *2, and holding the electrical key transmitter ASSY, press the engine switch.	• If the engine does not start due to a problem in the start request signal, [OFF] is displayed. • If you press the engine switch, the time [ON] is displayed will be very short. Therefore, it is necessary to press and hold the engine switch for a certain amount of time.

*1: With automatic transmission

*2: With manual transmission

Criteria: The displayed contents change according to the engine switch operation.

CAUTION:

Before you press the engine switch, check that the entry key indicator of the combination meter ASSY lights up green.

NG → Replacement of the collation ECM (smart key ECM ASSY)

OK

9	Checking the harnesses and connectors (collation ECM (smart key ECM ASSY) - chassis ground)

(1) Remove the D48 connector of the collation ECM (smart key ECM ASSY).
(2) Remove the A33 connector of the ECM.
(3) Measure the resistance according to the following table.

Resistance

Inspection terminals	Inspection conditions	Standard value
D48-7 (STSW) - A33-17 (START)	Always	1 Ωor less
D48-7 (STSW) - chassis ground	Always	10 kΩ or more

NG → Repair or replacement of the harnesses or connectors

OK

See the "EFI system" (Symptom table)

10	Reading the values using the SSM4 (S Code Check)

(1) Connect the SSM4 to the DLC3.
(2) Turn the ignition switch to ON.
(3) Turn on the SSM4.
(4) Enter the following menus: [Keyless Access(Collation ECM)] →[Data monitor]
(5) Based on the contents of the SSM4 display, read the [Data monitor].

Entry & Start

Tester display	Measurement items / range	Normal condition	Notes for diagnosis
[S Code Check]	Confirmation result of the collation ECM (smart key ECM ASSY) code and the ID code box (immobilizer code ECM) code / [OK] or [NG]	OK: Confirmation results normal NG: Confirmation results abnormal	If [NG] is displayed: • The S code is not registered for the collation ECM (smart key ECM ASSY) and the ID code box (immobilizer code ECM). • The steering is not locked. • The steering is not unlocked (you cannot start the engine).

Criteria: OK (OK result of the S Code Check) is displayed on the screen.

NG → Go to Step 23.

OK

11	Checking the steering lock

(1) When in ACC ON, check that the steering can be unlocked.
Criteria: The steering is unlocked.

NG → Go to Step 25.

OK

12	Reading the values using the SSM4 (IMMOBILISER)

(1) Connect the SSM4 to the DLC3.
(2) Turn the ignition switch to ON.
(3) Turn on the SSM4.
(4) Enter the following menus: [Keyless Access(Collation ECM)] →[Data monitor]
(5) Based on the contents of the SSM4 display, read the [Data monitor].

TD

Entry & Start

Tester display	Measurement items / range	Normal condition	Notes for diagnosis
[Immobilizer]	Immobilizer system status, as determined by the collation ECM (smart key ECM ASSY) / [Set] or [Unset]	[Unset]: The engine immobilizer is not set (ACC ON or IG ON) [Set]: The engine immobilizer is set (IG OFF)	• If the immobilizer cannot be unset, this item is used to check if the collation ECM (smart key ECM ASSY) is causing the problem. • If this item is [Set], the engine will not start.

Criteria: When the power changes to ACC ON or IG ON, the [Data monitor] item changes to unset.

Result

Result	Go to
OK	A
NG (when there is an ID code box)	B
NG (when there is no ID code box)	C

B → Go to Step 29.

C → Replacement of the collation ECM (smart key ECM ASSY)

A

13	Reading the values using the SSM4 (STARTER REQUEST SIGNAL)

(1) Connect the SSM4 to the DLC3.
(2) Turn the ignition switch to ON.
(3) Turn on the SSM4.
(4) Enter the following menus: [Keyless Access(Collation ECM)] →[Data monitor]
(5) Based on the contents of the SSM4 display, read the [Data monitor].

Power source control

Tester display	Measurement items / range	Normal condition	Notes for diagnosis
[Starter request signal monitor]	Status of the engine start command signal 1 / [OFF] or [ON]	OFF: Release the engine switch after approx. 1 second. ON: Move the shift lever in P *1, depress the brake pedal *1 or the clutch pedal *2, and holding the electrical key transmitter ASSY, press the engine switch.	• If the engine does not start due to a problem in the start request signal, [OFF] is displayed. • If you press the engine switch, the time [ON] is displayed will be very short. Therefore, it is necessary to press and hold the engine switch for a certain amount of time.

*1: With automatic transmission

*2: With manual transmission

Criteria: The displayed contents change according to the engine switch operation.

CAUTION:

Before you press the engine switch, check that the entry key indicator of the combination meter ASSY lights up green.

TD

NG → Replacement of the collation ECM (smart key ECM ASSY)

OK

Complete

14	Reading the values using the SSM4 (NEUTRAL SW / CLUTCH SW, SHIFT SWITCH STATUS P OR N)

(1) Connect the SSM4 to the DLC3.
(2) Turn the ignition switch to ON.
(3) Turn on the SSM4.
(4) Enter the following menus: [Keyless Access(Power Supply ECM)] →[Data monitor]
(5) Based on the contents of the SSM4 display, read the [Data monitor].

Power source control

Tester display	Measurement items / range	Normal condition	Notes for diagnosis
[Neutral SW/Clutch SW]	Shift position (P, N) / [OFF] or [ON]	OFF: The shift lever is not in P or N, the pedal is not being depressed ON: The shift lever is in P or N, the pedal is being depressed.	• Using this item, determine if there is any problem with the parking / neutral position switch. • When this item is [OFF], the engine will not start.

(6) Input the following menus: [Engine Control System] →[Data monitor]

Engine and ECT

Tester display	Measurement items / range	Normal condition	Notes for diagnosis
[Shift SW Status (P Range)]	Status of the parking / neutral position switch / [OFF] or [ON]	OFF: The shift lever is in a position other than P. ON: The shift lever is in P.	If a problem is found, the engine will not crank.
[Shift SW Status (N Range)]	Status of the parking / neutral position switch / [OFF] or [ON]	OFF: The shift lever is not in N. ON: The shift lever is in N.	If a problem is found, the engine will not crank.

Criteria: The [Data monitor] items change based on the shift position.

NG → Go to Step 16.

OK

15	Reading the values using the SSM4 (STOP LIGHT SWITCH 1)

(1) Connect the SSM4 to the DLC3.
(2) Turn the ignition switch to ON.
(3) Turn on the SSM4.
(4) Enter the following menus: [Keyless Access(Power Supply ECM)] →[Data monitor]
(5) Based on the contents of the SSM4 display, read the [Data monitor].

Power source control

Tester display	Measurement items / range	Normal condition	Notes for diagnosis
[Stop Light Switch 1]	Brake pedal status / [OFF] or [ON]	OFF: The brake pedal is not being depressed. ON: The brake pedal is being depressed.	• Using this item, determine if there is any problem with the parking / neutral position switch. • When this item is [OFF], the engine will not start. • If there is a problem caused by this item, if you press the engine switch for a certain amount of time, you can start the engine.

Criteria: If you remove your foot after depressing the brake pedal, the [Data monitor] item changes.

NG → Go to Step 18.

OK

Replacement of the collation ECM (smart key computer ASSY)

16	Unit inspection of the parking / neutral position switch ASSY

(1) Remove the parking / neutral position switch ASSY.
(2) Inspect the parking / neutral position switch ASSY.

NG → Replacement of the parking / neutral position switch ASSY

OK

17	Checking the harnesses and connectors (collation ECM (smart key ECM ASSY) - parking / neutral position switch ASSY)

(1) Remove the D48 connector of the collation ECM (smart key ECM ASSY).
(2) Remove the L2 connector of the parking / neutral position switch ASSY.
(3) Measure the resistance according to the following table.

Resistance

Tester display	Inspection conditions	Standard value
D48-5 (N-SW) - L2-4	Always	1 Ωor less
L2-5 - chassis ground	Always	1 Ωor less
D48-5 (N-SW) - chassis ground	Always	10 kΩ or more

NG → Repair or replacement of the harnesses or connectors

OK

Replacement of the collation ECM (smart key computer ASSY)

18	Unit inspection of the stop light switch ASSY

(1) Remove the stop light switch ASSY. (Refer to LE - 78)
(2) Inspect the stop light switch ASSY. (Refer to LE - 80)

NG → Replacement of the stop light switch ASSY

OK

19	Checking the harnesses and connectors (collation ECM (smart key ECM ASSY) - stop light switch ASSY) (Refer to TD - 193)

NG → Repair or replacement of the harnesses or connectors

OK

Replacement of the collation ECM (smart key computer ASSY)

20	Reading the values using the SSM4 (NEUTRAL SW / CLUTCH SW)

(1) Connect the SSM4 to the DLC3.
(2) Turn the ignition switch to ON.
(3) Turn on the SSM4.
(4) Enter the following menus: [Keyless Access(Power Supply ECM)] →[Data monitor]
(5) Based on the contents of the SSM4 display, read the [Data monitor].

Power source control

Tester display	Measurement items / range	Normal condition	Notes for diagnosis
[Neutral SW/Clutch SW]	Clutch pedal status / [OFF] or [ON]	OFF: The brake pedal is not being depressed. ON: The brake pedal is being depressed.	• Using this item, determine if there is any problem with the clutch position switch. • When this item is [OFF], the engine will not start.

Criteria: Based on the status of the clutch pedal, [ON] (depressing the clutch pedal) and [OFF] (your foot removed from the clutch pedal) are displayed on the screen.

NG → Go to Step 21.

OK

Replacement of the collation ECM (smart key computer ASSY)

21	Unit inspection of the clutch start switch ASSY

(1) Remove the clutch start switch ASSY. (Refer to CL - 29)
(2) Inspect the clutch start switch ASSY. (Refer to CL - 30)

NG → Repair or replacement of wiring harness or connector

OK

TD

22	Checking the harnesses and connectors (collation ECM (smart key ECM ASSY) - clutch start light switch ASSY)

(1) Remove the D48 connector of the collation ECM (smart key ECM ASSY).
(2) Remove the A20 connector of the clutch start switch ASSY.
(3) Measure the resistance according to the following table.

Resistance

Tester display	Inspection conditions	Standard value
D48-10 (CLUT) - A20-2	Always	1 Ωor less
D48-10 (CLUT) - chassis ground	Always	10 kΩ or more

(4) Reconnect the A20 connector of the clutch start switch ASSY.

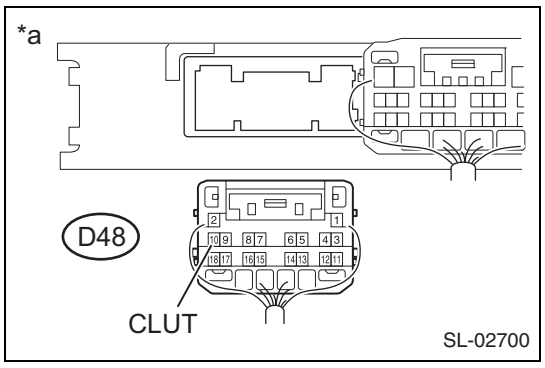

(5) Measure the voltage according to the following table.

Voltage

Inspection terminals	Inspection conditions	Standard value
D48-10 (CLUT) - chassis ground	Remove your foot from the clutch pedal →depress the clutch pedal	1V or less →9 V or more

Captions in illustration

*a	Rear of vehicle wire harness connector

NG → Repair or replacement of the harnesses or connectors

OK

Replacement of the collation ECM (smart key computer ASSY)

23	Replacement of the collation ECM (smart key computer ASSY)

(1) Replace the collation ECM (smart key ECM ASSY) with a new one.

CAUTION:
When replacing the collation ECM (smart key ECM ASSY), it is also necessary to replace all the electrical key transmitter SUB-ASSYs.

(2) Perform the registration settings. (Refer to the "Registration manual for immobilizer")
(3) Using [Data monitor], check if S code collation is functioning properly.

Entry & Start

Tester display	Measurement items / range	Normal condition	Notes for diagnosis
[S Code Check]	Confirmation result of the collation ECM (smart key ECM ASSY) code and the ID code box (immobilizer code ECM) code / [OK] or [NG]	OK: Confirmation results normal NG: Confirmation results abnormal	If [NG] is displayed: • The S code is not registered for the collation ECM (smart key ECM ASSY) and the ID code box (immobilizer code ECM). • The steering is not locked. • The steering is not unlocked (you cannot start the engine).

Criteria: [OK] is displayed on the screen.

NG → Go to Step 24.

OK

Complete

24	Replacement of the ID code box (immobilizer code ECM)

(1) Replace the ID code box (immobilizer code ECM) with a new one.
(2) Perform the registration settings. (Refer to the "Registration manual for immobilizer")
(3) Using [Data monitor], check if S code collation is functioning properly.

Entry & Start

Tester display	Measurement items / range	Normal condition	Notes for diagnosis
[S Code Check]	Confirmation result of the collation ECM (smart key ECM ASSY) code and the ID code box (immobilizer code ECM) code / [OK] or [NG]	OK: Confirmation results normal NG: Confirmation results abnormal	If [NG] is displayed: • The S code is not registered for the collation ECM (smart key ECM ASSY) and the ID code box (immobilizer code ECM). • The steering is not locked. • The steering is not unlocked (you cannot start the engine).

Criteria: [OK] is displayed on the screen.

Next

Complete

25	Reading the values using the SSM4 (STEERING UNLOCK SWITCH)

(1) Connect the SSM4 to the DLC3.
(2) Turn the ignition switch to ON.
(3) Turn on the SSM4.
(4) Enter the following menus: [Keyless Access(Power Supply ECM)] →[Data monitor]
(5) Based on the contents of the SSM4 display, read the [Data monitor].

Power source control

Tester display	Measurement items / range	Normal condition	Notes for diagnosis
[Steering unlock SW]	Status of the steering lock sensor output from the steering lock actuator ASSY / [OFF] or [ON]	OFF: The steering is locked. ON: The steering is unlocked.	• When the shift lever is in P, if a door is opened or closed with the engine switch off, the steering is locked. • If the electrical key transmitter ASSY is in the vehicle interior, and the engine switch is on (ACC) or on (IG), the steering is unlocked. • If the steering unlock signal is off, the engine will not start.

TD

Criteria: [ON] is displayed for the [Data monitor] item (Steering lock is unlocked).

NG → Go to Step 26.

OK

See "Steering lock system" (steering lock cannot be unlocked)

26	Reading the values using the SSM4 (L Code Check)

(1) Connect the SSM4 to the DLC3.
(2) Turn the ignition switch to ON.
(3) Turn on the SSM4.
(4) Enter the following menus: [Keyless Access(Collation ECM)] →[Data monitor]
(5) Based on the contents of the SSM4 display, read the [Data monitor].

Entry & Start

Tester display	Measurement items / range	Normal condition	Notes for diagnosis
[L Code Check]	Confirmation result of the ID code box (immobilizer code ECM) code and the steering lock actuator ASSY (steering lock ECM) / [OK] or [NG]	OK: Confirmation results normal NG: Confirmation results abnormal	If [NG] is displayed: • The L code is not registered for ID code box (immobilizer code ECM) or the steering lock actuator ASSY (steering lock ECM). • The steering is not locked. • The steering is not unlocked (you cannot start the engine).

Criteria: If the electrical key transmitter ASSY is in the vehicle interior, the [Data monitor] item changes to [OK].

NOTE:

Reasons for confirmation failure:

- There is a problem in the steering lock ECM and ID code box (immobilizer code ECM)*.
- There is a problem in communications between ECMs.
- The ECM was replaced, but is not yet registered.
- The ECM was replaced with an ECM that has a code that was already registered.

*: The ID code box is included.

NG → Go to Step 28.

OK

27	Replacement of the steering lock actuator ASSY (steering lock ECM)

(1) Replace the steering lock actuator ASSY (steering lock ECM) with a new one.
(2) Perform the registration settings. (Refer to the "Registration manual for immobilizer")
(3) Turn the ignition switch to ON.
(4) Operate the steering wheel to check the steering status.

Next

Complete

28	Replacement the steering lock actuator ASSY (steering lock ECM)

(1) Replace the steering lock actuator ASSY (steering lock ECM) with a new one.
(2) Perform the registration settings. (Refer to the "Registration manual for immobilizer")
(3) Using [Data monitor], check if L code collation is functioning properly.

Entry & Start

Tester display	Measurement items / range	Normal condition	Notes for diagnosis
[L Code Check]	Confirmation result of the ID code box (immobilizer code ECM) code and the steering lock actuator ASSY (steering lock ECM) / [OK] or [NG]	OK: Confirmation results normal NG: Confirmation results abnormal	If [NG] is displayed: • The L code is not registered for ID code box (immobilizer code ECM) or the steering lock actuator ASSY (steering lock ECM). • The steering is not locked. • The steering is not unlocked (you cannot start the engine).

Criteria: OK ([L Code Check] OK) is displayed on the screen.

Result

Result	Go to
OK	A
NG (when there is an ID code box)	B
NG (when there is no ID code box)	C

TD

B → Replacement of the ID code box (immobilizer code ECM)

C → Replacement of the collation ECM (smart key computer ASSY)

A

29 Replacement of the collation ECM (smart key computer ASSY)

(1) Replace the collation ECM (smart key ECM ASSY) with a new one.
(2) Perform the registration settings. (Refer to the "Registration manual for immobilizer")
(3) Using [Data monitor], check if S code collation is functioning properly.

Entry & Start

Tester display	Measurement items / range	Normal condition	Notes for diagnosis
[S Code Check]	Confirmation result of the collation ECM (smart key ECM ASSY) code and the ID code box (immobilizer code ECM) code / [OK] or [NG]	OK: Confirmation results normal NG: Confirmation results abnormal	If [NG] is displayed: • The S code is not registered for the collation ECM (smart key ECM ASSY) and the ID code box (immobilizer code ECM). • The steering is not locked. • The steering is not unlocked (you cannot start the engine).

Criteria: [OK] is displayed on the screen.

NG → Go to Step 30.

OK

Complete

30	Replacement of the ID code box (immobilizer code ECM)

(1) Replace the ID code box (immobilizer code ECM) with a new one.
(2) Perform the registration settings. (Refer to the "Registration manual for immobilizer")
(3) Using [Data monitor], check if S code collation is functioning properly.

Entry & Start

Tester display	Measurement items / range	Normal condition	Notes for diagnosis
[S Code Check]	Confirmation result of the collation ECM (smart key ECM ASSY) code and the ID code box (immobilizer code ECM) code / [OK] or [NG]	OK: Confirmation results normal NG: Confirmation results abnormal	If [NG] is displayed: • The S code is not registered for the collation ECM (smart key ECM ASSY) and the ID code box (immobilizer code ECM). • The steering is not locked. • The steering is not unlocked (you cannot start the engine).

Criteria: [OK] is displayed on the screen.

Next

Complete

The power does not turn on (does not change to both ACC ON or IG ON)

Circuit description

If any of the following operations are performed, the collation ECM (smart key ECM ASSY) receives a signal and changes the power mode.

- When the electrical key transmitter SUB-ASSY is in the vehicle interior, press the engine switch.
- When the transmitter battery of the electrical key transmitter SUB-ASSY is drained, depress the brake pedal *1 or the clutch pedal *2, and hold the electrical transmitter SUB-ASSY up to the engine switch.
- If the entry cancel function has been customized, while depressing the brake pedal *1 or the clutch pedal *2, hold the electrical key transmitter SUB-ASSY up to the engine switch.

*1: With automatic transmission

*2: Manual transmission

NOTE:

If you remove and then reconnect the battery cable, the power returns to the power mode it was before you removed the cable.

Related [Data monitor] and [Active Test]

Symptoms	[Data monitor] item	[Active Test] item
The power mode does not switch to on (IG) or to on (ACC).	Power supply • [System SW1] • [System SW2] • [IG2 relay monitor (outside)] • [IG2 relay monitor (inside)] • [ACC relay monitor] • [IG1 relay monitor (outside)] • [IG1 relay monitor (inside)] • [Power supply status] Engine • [Ignition]	-

Circuit figure

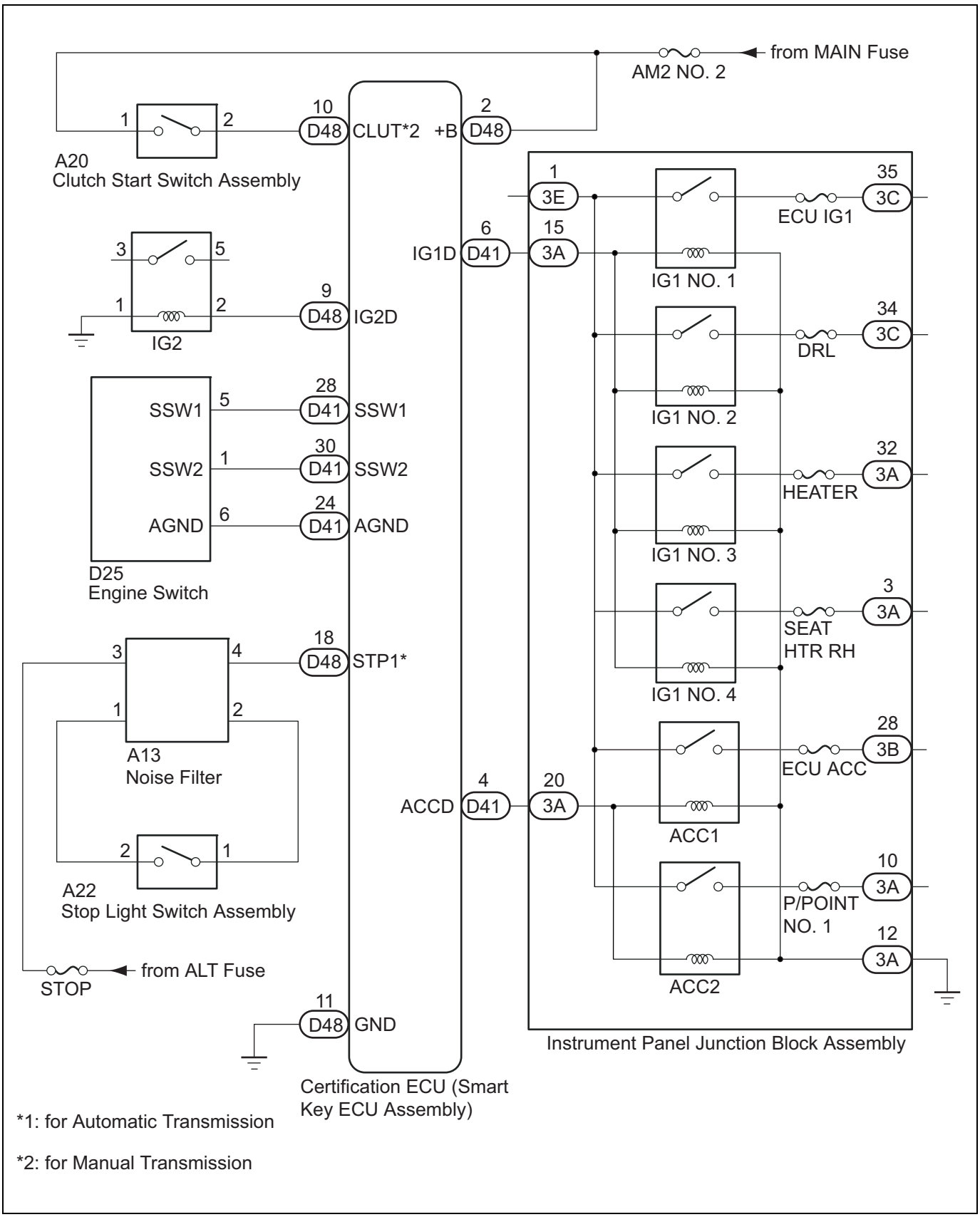

Inspection steps

CAUTION:

- Before performing troubleshooting that uses CAN communication of the entry & start system, perform the inspection in "How to troubleshoot", and check that there are no problems in the communication system. (Refer to TD - 146)
- Before replacing the collation ECM (smart key ECM ASSY), refer to "entry & start system (entry function)". (Refer to TD - 5)
- Check that no DTC is output. If any DTC is output, proceed to "List of diagnostic codes". (Refer to TD - 172)
- If the entry & start system has been disabled by the entry & start system customize settings, enable it before performing troubleshooting. (Refer to TD - 155)
- After finishing repair, check that the problem doesn't occur again.
- Before performing the following inspection steps, check the fuses related to this system.

1	Checking the wireless door lock control system (operation)

(1) Check that the wireless door lock function operates properly. (Refer to DL - 28)

Criteria: The wireless door and lock function operates properly.

NG → See "Entry & Start system" (The entry lock / unlock function and wireless function for all doors do not function) (Refer to TD - 84)

OK

2	Checking the harnesses and connectors (power supply) (Refer to TD - 176)

NG → Repair or replacement of the harnesses or connectors of the circuits that connect to the power source

OK

3	Checking the harnesses and connectors (GND) (Refer to TD - 176)

NG → Repair or replacement of the harnesses or connectors

OK

4	Checking the entry & start system

(1) Remove the battery from the electrical key transmitter SUB-ASSY. (Refer to DL - 92)

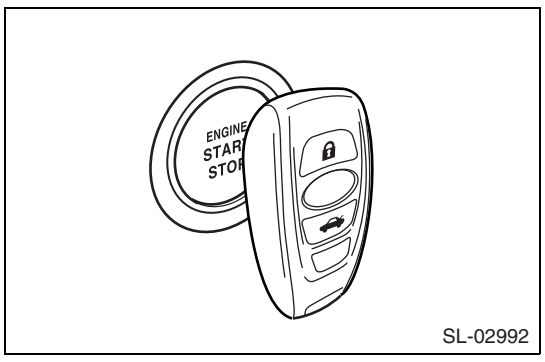

SL-02992

(2) Depress the brake pedal *1 or the clutch pedal *2, and touch the logo side of the electrical key transmitter SUB-ASSY to the engine switch.
*1: With automatic transmission
*2: With manual transmission

(3) When you touch the logo side of the electrical key transmitter SUB-ASSY to the engine switch, check if the power mode changes.

Criteria: The power mode changes.

NOTE:

If the power mode does not change, there is a problem in the cabin confirmation function.

Result

Result	Go to
NG (The power mode does not change)	A
OK (The power mode changes)	B

B → Go to Step 13.

A

5	Reading the values using the SSM4 (STOP LIGHT SWITCH 1, NEUTRAL SW / CLUTCH SW)

(1) With automatic transmission
  (a) Connect the SSM4 to the DLC3.
  (b) Turn the ignition switch to ON.
  (c) Turn on the SSM4.
  (d) Enter the following menus: [Keyless Access(Power Supply ECM)] →[Data monitor]
  (e) Based on the contents of the SSM4 display, read the [Data monitor].

TD

Power source control

Tester display	Measurement items / range	Normal condition	Notes for diagnosis
[Stop Light Switch 1]	Brake pedal status / [OFF] or [ON]	OFF: The brake pedal is not being depressed. ON: The brake pedal is being depressed.	• Using this item, determine if there is any problem with the stop light switch. • When this item is [OFF], the engine will not start. • If there is a problem caused by this item, if you press the engine switch for a certain amount of time, you can start the engine.

Criteria: Based on the status of the stop light switch, "ON" (depressing the brake pedal) and "OFF" (your foot removed from the brake pedal) are displayed on the screen.

(2) With manual transmission
  (a) Connect the SSM4 to the DLC3.
  (b) Turn the ignition switch to ON.
  (c) Turn on the SSM4.
  (d) Enter the following menus: [Keyless Access(Power Supply ECM)] →[Data monitor]
  (e) Based on the contents of the SSM4 display, read the [Data monitor].

Power source control

Tester display	Measurement items / range	Normal condition	Notes for diagnosis
[Neutral SW/Clutch SW]	Clutch pedal status / [OFF] or [ON]	OFF: The brake pedal is not being depressed. ON: The brake pedal is being depressed.	• Using this item, determine if there is any problem with clutch switch. • When this item is [OFF], the engine will not start.

Criteria: Based on the status of the stop light switch, [ON] (depressing the clutch pedal) and [OFF] (your foot removed from the clutch pedal) are displayed on the screen.

Result

Result	Go to
OK	A
NG (with automatic transmission)	B
NG (with manual transmission)	C

B → Go to Step 8.

C → Go to Step 10.

A

6	Reading the values using the SSM4 (POWER SUPPLY CONDITION)

(1) Connect the SSM4 to the DLC3.
(2) Turn the ignition switch to ON.
(3) Turn on the SSM4.
(4) Enter the following menus: [Keyless Access(Power Supply ECM)] →[Data monitor]
(5) Based on the contents of the SSM4 display, read the [Data monitor].

Power source control

Tester display	Measurement items / range	Normal condition	Notes for diagnosis
[Power supply status]	Power supply status / [All OFF], [IG1 ON] or [ACC ON], [IG2 ON], [ST ON]	[All OFF]: Engine switch off (ACC and IG) ACC ON: The engine switch is on (ACC). IG1 ON: The engine switch is on (IG) (IG1 relay on) IG2 ON: The engine switch is on (IG) (IG2 relay on) ST ON: The engine start request signal is sent.	Because [IG1 ON] and [IG2 ON] occur almost simultaneously, [IG1] may not be displayed ([IG1 ON] is displayed for a very short period of time).

Criteria: Based on the change of power mode when you pressed the engine switch, the change contents are displayed.

NG → Go to Step 12.

OK

7	Inspection of the collation ECM (smart key ECM ASSY)

(1) Connect the SSM4 to the DLC3.
(2) Turn the ignition switch to ON.
(3) Turn on the SSM4.
(4) Enter the following menus: [Keyless Access(Power Supply ECM)] →[Data monitor]
(5) Based on the contents of the SSM4 display, read the [Data monitor].

Power source control

Tester display	Measurement items / range	Normal condition	Notes for diagnosis
[Power supply status]	Power supply status / [All OFF], [IG1 ON] or [ACC ON], [IG2 ON], [ST ON]	[All OFF]: Engine switch off (ACC and IG) ACC ON: The engine switch is on (ACC). IG1 ON: The engine switch is on (IG) (IG1 relay on) IG2 ON: The engine switch is on (IG) (IG2 relay on) ST ON: The engine start request signal is sent.	Because [IG1 ON] and [IG2 ON] occur almost simultaneously, [IG1] may not be displayed ([IG1 ON] is displayed for a very short period of time).

(6) Measure the voltage according to the following table.

*a

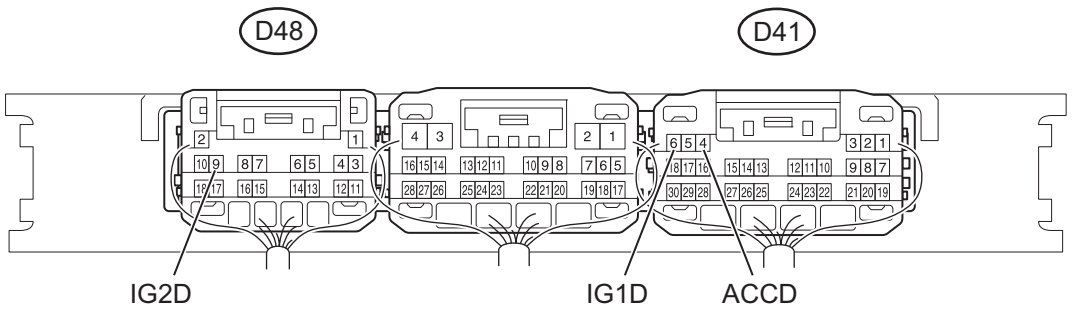

Captions in illustration

*a	Connector connected (Collation ECM (smart key ECM ASSY))	-	-

Voltage

Inspection terminals	Inspection conditions	Standard value
D41-6 (IG1D) - chassis ground	IG OFF	1 V or less
	ACC ON	1 V or less
	IG ON	9V or more
D48-9 (IG2D) - chassis ground	IG OFF	1 V or less
	ACC ON	1 V or less
	IG ON	9V or more
D41-4 (ACCD) - chassis ground	IG OFF	1 V or less
	ACC ON	8.5V or more
	IG ON	8.5V or more

NG → Replacement of the collation ECM (smart key ECM ASSY)

OK

Checking the circuits connected to the relay

8	Unit inspection of the stop light switch ASSY

(1) Remove the stop light switch ASSY. (Refer to LE - 78)
(2) Inspect the stop light switch ASSY. (Refer to LE - 80)

NG → Replacement of the stop light switch ASSY

OK

9	Checking the harnesses and connectors (collation ECM (smart key ECM ASSY) - stop light switch ASSY) (Refer to TD - 193)

NG → Repair or replacement of the harnesses or connectors

OK

Replacement of the collation ECM (smart key computer ASSY)

10	Unit inspection of the clutch start switch ASSY

(1) Remove the clutch start switch ASSY. (Refer to CL - 29)
(2) Inspect the clutch start switch ASSY. (Refer to CL - 30)

NG → Replacement of the clutch start switch ASSY

OK

11	Checking the harnesses and connectors

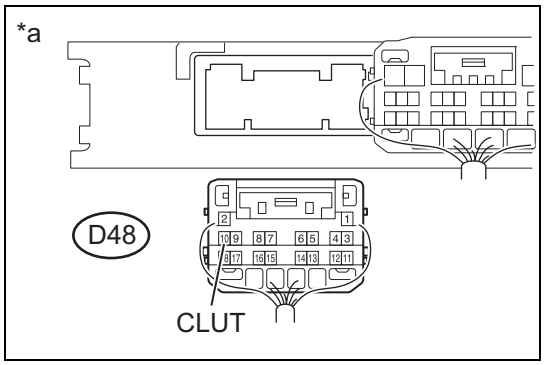

(1) Remove the D48 connector of the collation ECM (smart key ECM ASSY).
(2) Remove the A20 connector of the clutch start switch ASSY.
(3) Measure the resistance according to the following table.

Resistance

Tester display	Inspection conditions	Standard value
D48-10 (CLUT) - A20-2	Always	1 Ωor less
D48-10 (CLUT) - chassis ground	Always	10 kΩ or more

(4) Reconnect the A20 connector of the clutch start switch ASSY.
(5) Measure the voltage according to the following table.

Voltage

Tester display	Inspection conditions	Standard value
D48-10 (CLUT) - chassis ground	Remove your foot from the clutch pedal →depress the clutch pedal	1V or less →9 V or more

Captions in illustration

*a	Rear side of the wiring harness connector (See "collation ECM (smart key ECM ASSY)")

NG → Repair or replacement of the harnesses or connectors

OK

Replacement of the collation ECM (smart key computer ASSY)

12	DTC check

(1) Check for DTC. (Refer to TD - 161)

Result

Result	Go to
No DTC is output	A
DTC B2784 is output	B
DTC B2785 is output	C

B → Proceed to "List of diagnostic codes" (B2784) (Refer to TD - 255)

C → Proceed to "List of diagnostic codes" (B2785)

A

Replacement of the electrical key transmitter SUB-ASSY

13	Reading the values using the SSM4 (START SWITCH 1, 2)

(1) Connect the SSM4 to the DLC3.
(2) Turn the ignition switch to ON.
(3) Turn on the SSM4.
(4) Enter the following menus: [Keyless Access(Power Supply ECM)] →[Data monitor]
(5) Based on the contents of the SSM4 display, read the [Data monitor].

Power source control

Tester display	Measurement items / range	Normal condition	Notes for diagnosis
[System SW1]	Connection status of the engine switch 1 / [OFF] or [ON]	OFF: The engine switch is not being pushed. ON: The engine switch is being pushed.	• If the engine switch is not pressed for a long enough time, the display contents may not change. • Using this item, determine if there is any problem with the engine switch input signal.
[System SW2]	Connection status of the engine switch 2 / [OFF] or [ON]	OFF: The engine switch is not being pushed. ON: The engine switch is being pushed.	• Back-up for engine switch 1. If you press the engine switch, the control function only works if the both engine switch 1 and 2 are operating properly. • Works in the same way as engine switch 1.

Criteria: According to the engine switch operation, the [Data monitor] display contents are changed.

Result

Result	Go to
NG	A
OK	B

B → Proceed to "Entry & Start system" (entry function) (ROOM OSCILLATOR does not recognize the key) (Refer to TD - 118)

A

14	Unit inspection of the engine switch

(1) Remove the engine switch ASSY.
(2) Inspect the engine switch ASSY.

NG → Replacement of the engine switch

TD

OK

15	Checking the harnesses and connectors (collation ECM (smart key ECM ASSY) - engine switch)

(1) Remove the D41 connector of the collation ECM (smart key ECM ASSY).
(2) Remove the D25 connector of the engine switch.
(3) Measure the resistance according to the following table.

Resistance

Tester display	Inspection conditions	Standard value
D41-28 (SSW1) - D25-5 (SS1)	Always	1 Ωor less
D41-30 (SSW2) - D25-1 (SS2)	Always	1 Ωor less
D41-28 (SSW1) - chassis ground	Always	10 kΩ or more
D41-30 (SSW2) - chassis ground	Always	10 kΩ or more

NG → Repair or replacement of the harnesses or connectors

OK

Replacement of the collation ECM (smart key computer ASSY)

The power does not turn ON (power status changes to ACC ON but not to IG ON)

Circuit description

With the electrical key transmitter SUB-ASSY in the vehicle interior, press the engine switch. The collation ECM (smart key ECM ASSY) receives the signal and the power mode changes.

NOTE:

If you remove and then reconnect the battery cable, the power returns to the mode it was before you removed the cable.

Circuit figure

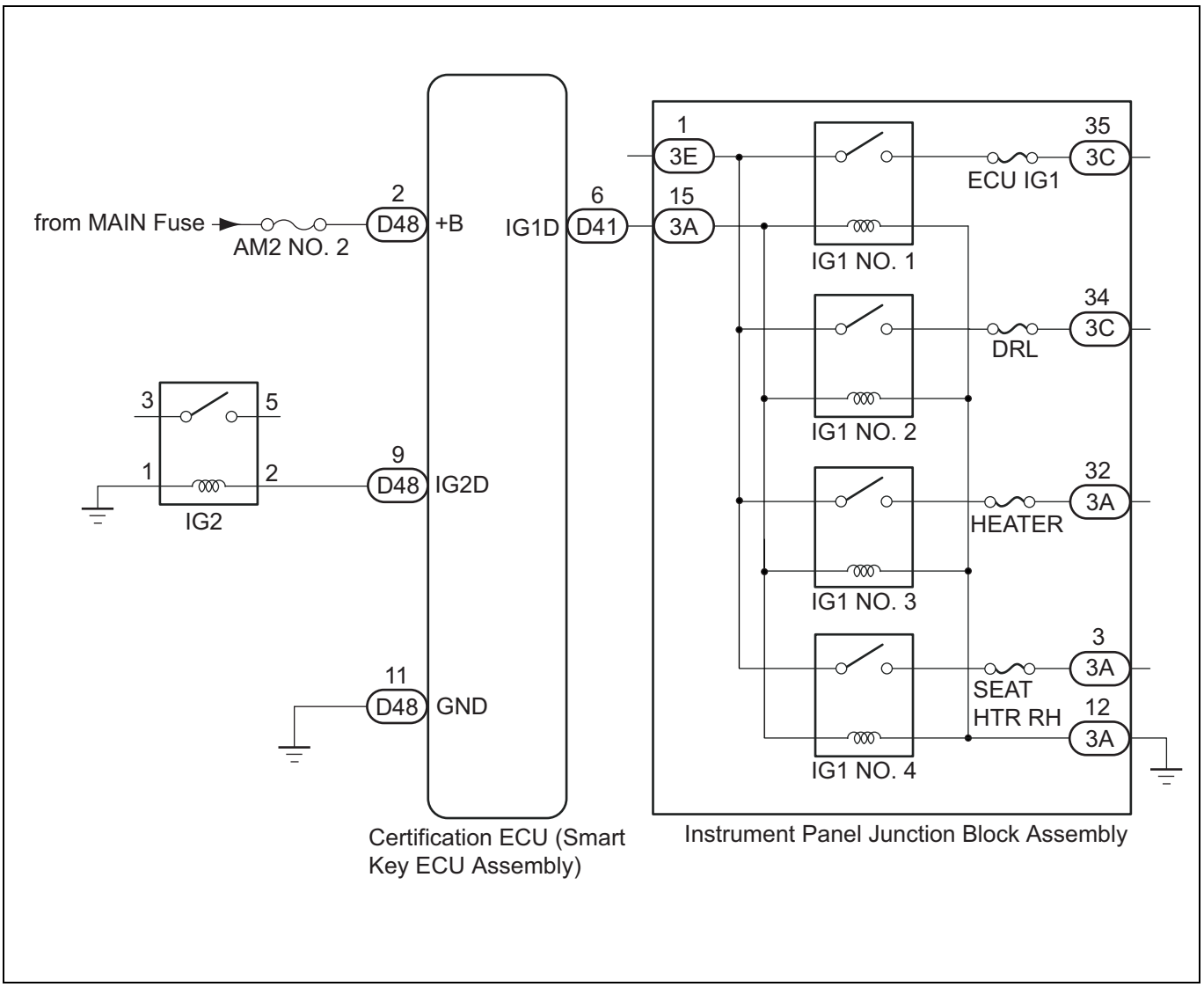

TD

Inspection steps

CAUTION:

- The entry & start system uses the CAN communication. Before performing troubleshooting, perform the inspection in "How to troubleshoot", and check that there are no communication problems. (Refer to TD - 146)
- Before replacing the collation ECM (smart key ECM ASSY), refer to "entry & start system (entry function)". (Refer to TD - 5)
- Check that no DTC is output. If any DTC is output, proceed to "List of diagnostic codes". (Refer to TD - 172)
- If the entry & start system has been disabled by the entry & start system customize settings, enable it before performing troubleshooting. (Refer to TD - 155)
- Before performing the following inspection steps, check the fuses related to this system.
- After finishing repair, check that the problem doesn't occur again.

1	Checking the harnesses and connectors (collation ECM (smart key ECM ASSY) - IG2 relay)

(1) Remove the D48 connector of the collation ECM (smart key ECM ASSY).
(2) Remove the IG2 relay from the engine compartment relay block.
(3) Measure the resistance according to the following table.

Resistance

Tester display	Inspection conditions	Standard value
D48-9 (IG2D) - IG2 relay terminal 2	Always	1 Ωor less
IG2 relay terminal 1 - chassis ground	Always	1 Ωor less

NG → Repair or replacement of the harnesses or connectors

OK

2	Unit inspection of the IG2 relay

(1) Inspect the IG2 relay unit.

NG → Replacement of the IG2 relay

OK

3	Checking the harnesses and connectors (collation ECM - instrument panel junction block ASSY)

(1) Remove the D41 connector of the collation ECM (smart key ECM ASSY).
(2) Remove the 3A connector of the instrument panel junction block ASSY.
(3) Measure the resistance according to the following table.

Resistance

Tester display	Inspection conditions	Standard value
D41-6 (IG1D) - 3A-15	Always	1 Ωor less
3A-12 - chassis ground	Always	1 Ωor less

NG → Repair or replacement of the harnesses or connectors

OK

4	Unit inspection of the instrument panel junction block ASSY (IG1 NO. 1, IG1 NO. 2, IG1 NO. 3, IG1 NO. 4 relay)

(1) Remove the instrument panel junction block ASSY.
(2) Remove the main body ECM (multiplex network body ECM) from the instrument panel junction block ASSY.
(3) Measure the resistance according to the following table.

*a

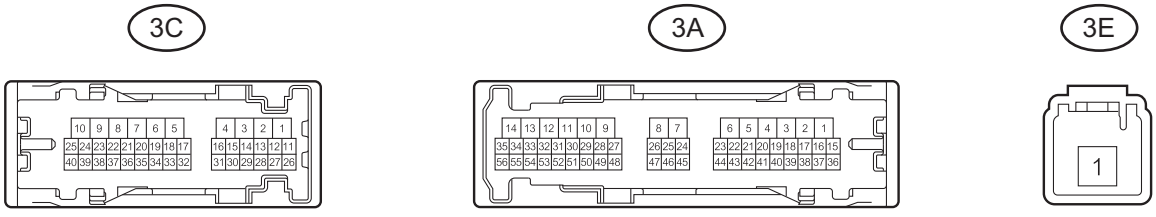

Captions in illustration

*a	Connector not connected (Instrument panel junction block ASSY)	-	-

Resistance

Inspection terminals	Inspection conditions	Standard value
3E-1 - 3C-35	Battery voltage is not applied to terminals 3A-15 and 3A-12.	10 kΩ or more
	Battery voltage is applied to terminals 3A-15 and 3A-12.	1 Ωor less
3E-1 - 3C-34	Battery voltage is not applied to terminals 3A-15 and 3A-12.	10 kΩ or more
	Battery voltage is applied to terminals 3A-15 and 3A-12.	1 Ωor less
3E-1 - 3A-32	Battery voltage is not applied to terminals 3A-15 and 3A-12.	10 kΩ or more
	Battery voltage is applied to terminals 3A-15 and 3A-12.	1 Ωor less
3E-1 - 3A-3	Battery voltage is not applied to terminals 3A-15 and 3A-12.	10 kΩ or more
	Battery voltage is applied to terminals 3A-15 and 3A-12.	1 Ωor less

TD

NG → Replacement of the instrument panel junction block ASSY

OK

5	Inspection of the collation ECM (smart key ECM ASSY)

(1) Reconnect the D41 and the D48 connectors of the collation ECM (smart key ECM ASSY).
(2) Measure the voltage according to the following table.

*a

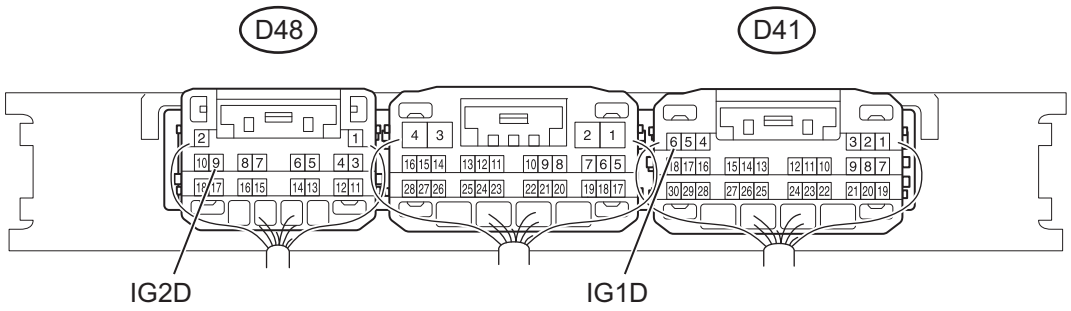

Captions in illustration

*a	Connector connected (Collation ECM (smart key ECM ASSY))	-	-

Voltage

Inspection terminals	Inspection conditions	Standard value
D41-6 (IG1D) - chassis ground	ACC ON →IG ON	1V or less →9 V or more
D48-9 (IG2D) - chassis ground	ACC ON →IG ON	1V or less →9 V or more

NG → Replacement of the collation ECM (smart key computer ASSY)

OK

Checking the circuits connected to the relay

The power does not turn ON (power status changes to IG ON but not to ACC ON)

Circuit description

With the electrical key transmitter SUB-ASSY in the vehicle interior, press the engine switch. The collation ECM (smart key ECM ASSY) receives the signal and the power mode changes. If the power mode does not change to ACC ON but does change to IG ON, use these troubleshooting procedures.

NOTE:

If you remove and then reconnect the battery cable, the power returns to the mode it was before you removed the cable.

TD

Circuit figure

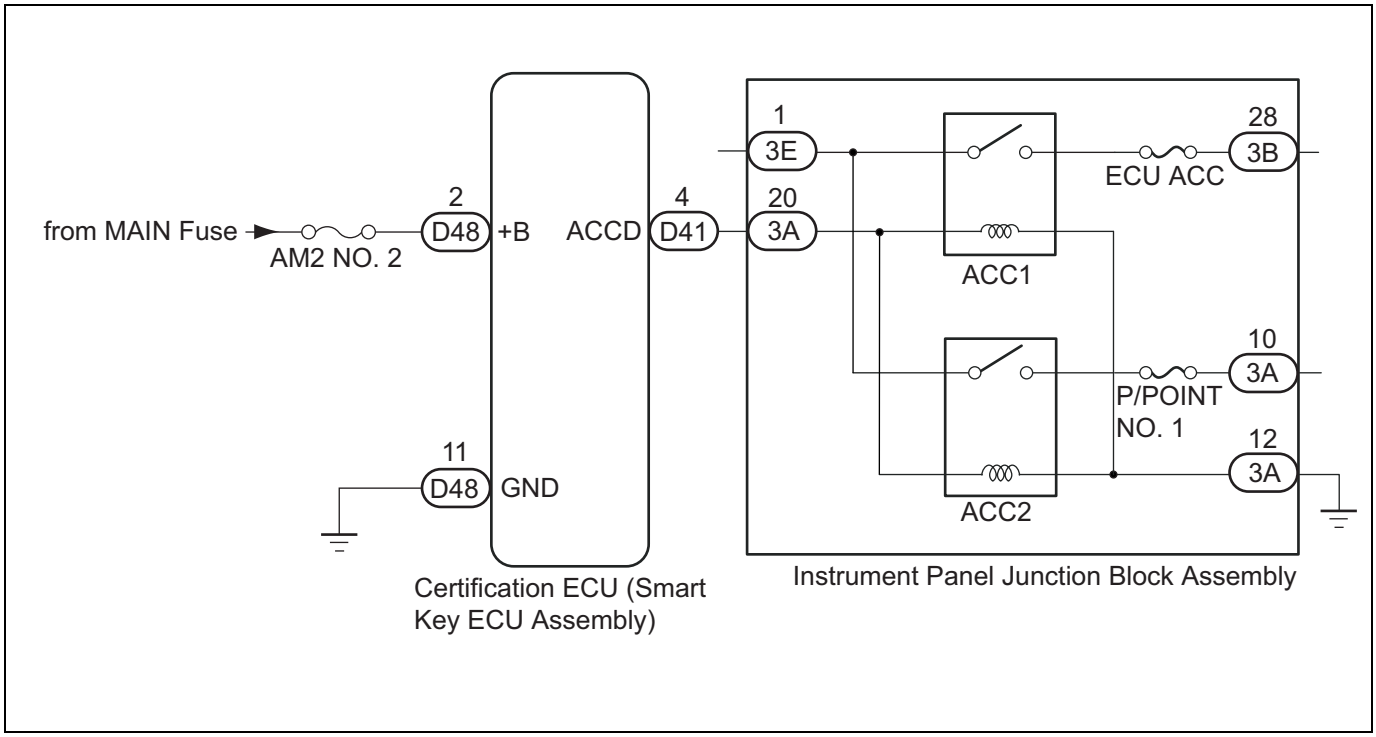

Inspection steps

CAUTION:

- The entry & start system uses the CAN communication. Before performing troubleshooting, perform the inspection in "How to troubleshoot", and check that there are no communication problems. (Refer to TD - 146)
- Before replacing the collation ECM (smart key ECM ASSY), refer to "entry & start system (entry function)". (Refer to TD - 5)
- Check that no DTC is output. If any DTC is output, proceed to "List of diagnostic codes". (Refer to TD - 172)
- If the entry & start system has been disabled by the entry & start system customize settings, enable it before performing troubleshooting. (Refer to TD - 155)
- Before performing the following inspection steps, check the fuses related to this system.

- After finishing repair, check that the problem doesn't occur again.

1	Checking the harnesses and connectors (instrument panel junction block ASSY - collation ECM) (Refer to TD - 179)

NG → Repair or replacement of the harnesses or connectors

OK

2	Unit inspection of the instrument panel junction block ASSY (ACC relay) (Refer to TD - 180)

NG → Replacement of the instrument panel junction block ASSY

OK

3	Inspection of the collation ECM (smart key ECM ASSY) (Refer to TD - 181)

NG → Replacement of the collation ECM (smart key computer ASSY)

OK

Checking the circuits connected to the relay

Engine immobilizer system (with entry & start system)

Precautions

1. Notes for registration
   (1) When replacing any of the following parts, refer to the "Registration manual for immobilizer".
   CAUTION:
   - When replacing the collation ECM (smart key ECM ASSY), it is also necessary to prepare all the registered electrical key transmitter SUB-ASSYs.
   - It is not possible to use a registered electrical key transmitter SUB-ASSY or ECM in a different vehicle.

   (a) Collation ECM (smart key ECM ASSY)
   (b) ID code box (immobilizer code ECM)*
   (c) Steering lock actuator ASSY (steering lock ECM)
   (d) ECM
   (e) Electrical key transmitter SUB-ASSY

*: The ID code box is included.

2. Precautions for battery
   (1) Immediately after the battery cable disconnection and re-connection, the entry unlock function may not operate. In this case, the entry unlock function returns by performing the wireless door lock and unlock.
   (2) After battery cable disconnection and re-connection, the engine may not start immediately when trying to start. In this case, turn of the engine switch. On 2nd try, the engine can start normally.
   (3) The vehicle records the power supply mode continuously. If you remove and then reconnect the battery cable, the power returns to the mode it was before you removed the cable. Always turn off the engine switch, before disconnecting the battery cable.
   CAUTION:
   With the battery run-out condition, if you do not know the power supply mode before cable disconnection, be very careful when re-connecting the battery cable.

TD

Parts location

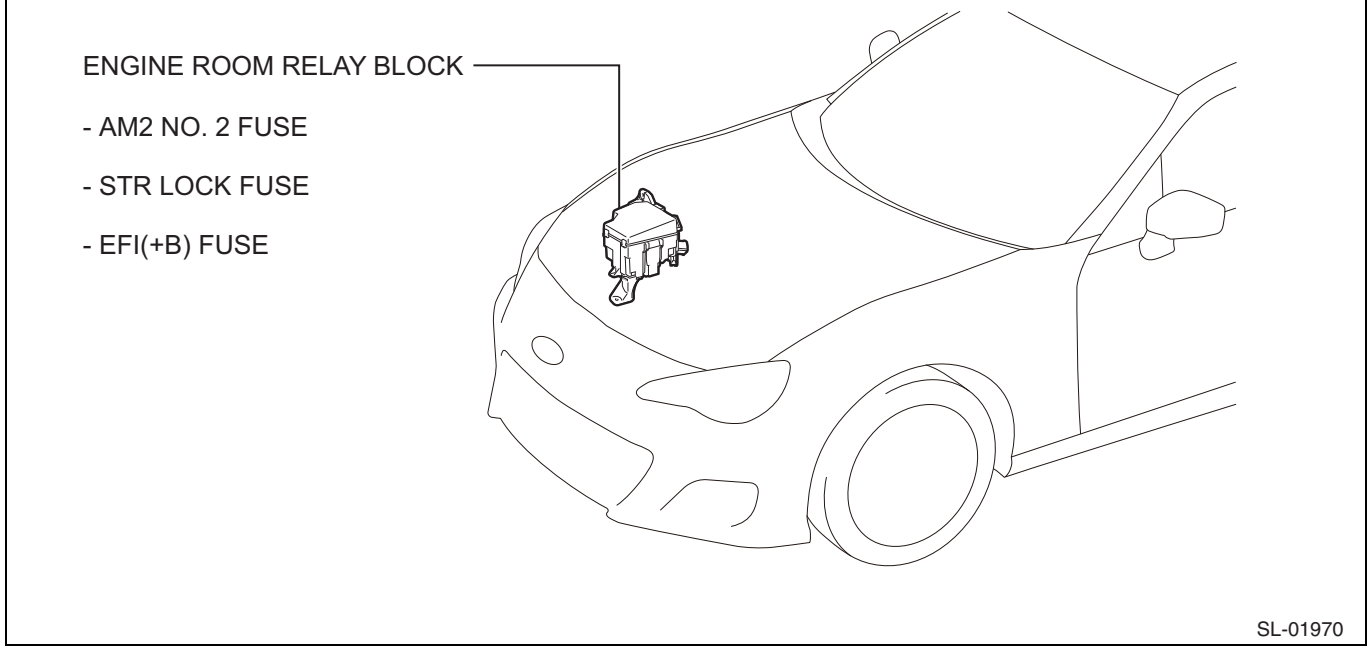

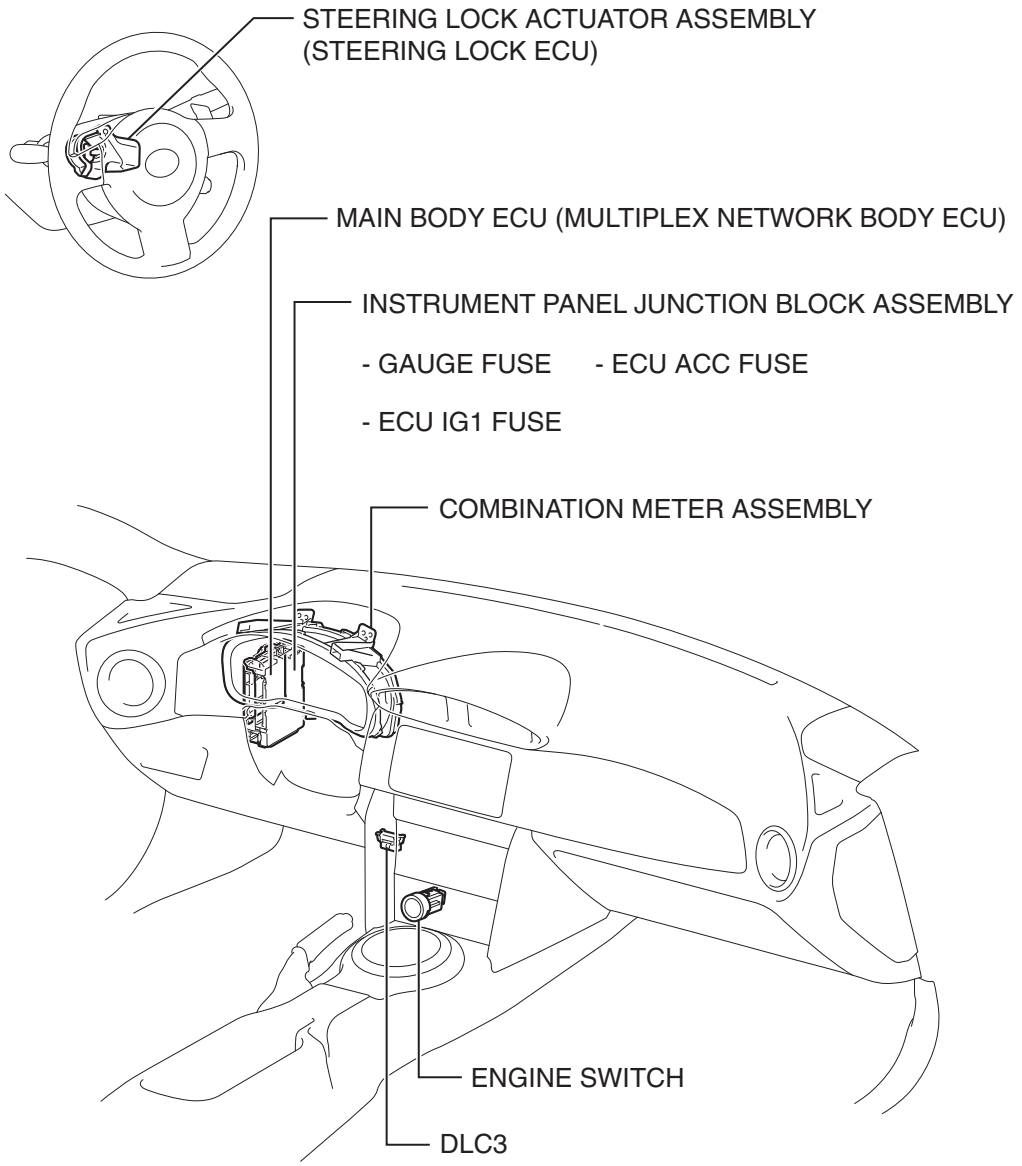

ID CODE BOX (IMMOBILISER CODE ECU)*

CERTIFICATION ECU (SMART KEY ECU ASSEMBLY)

REFER TO THE “REGISTRATION MANUAL FOR IMMOBILIZER” FOR ATTACHMENT POSITION.

*: w/ ID Code Box

SL-02065

Circuit figure

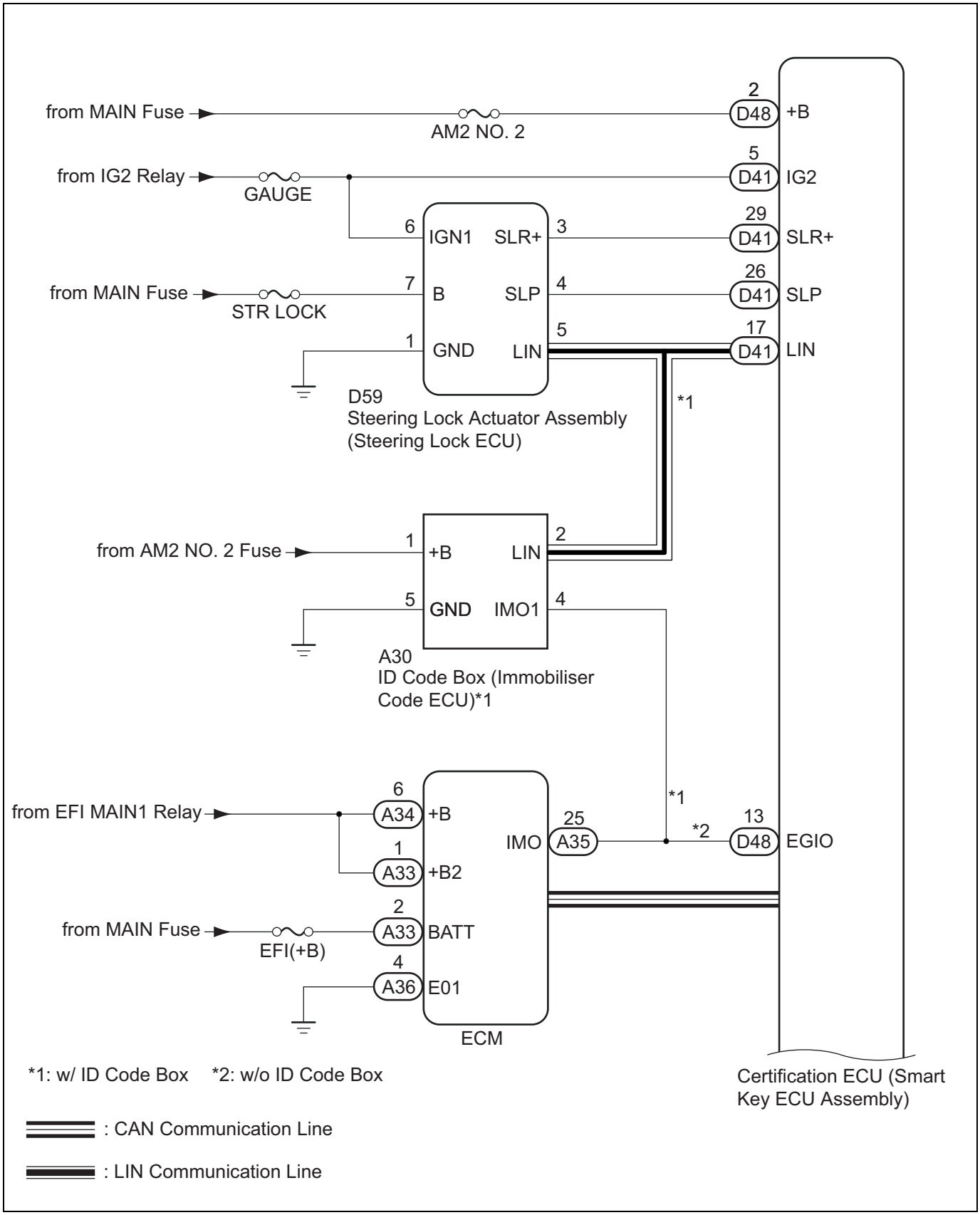

TD

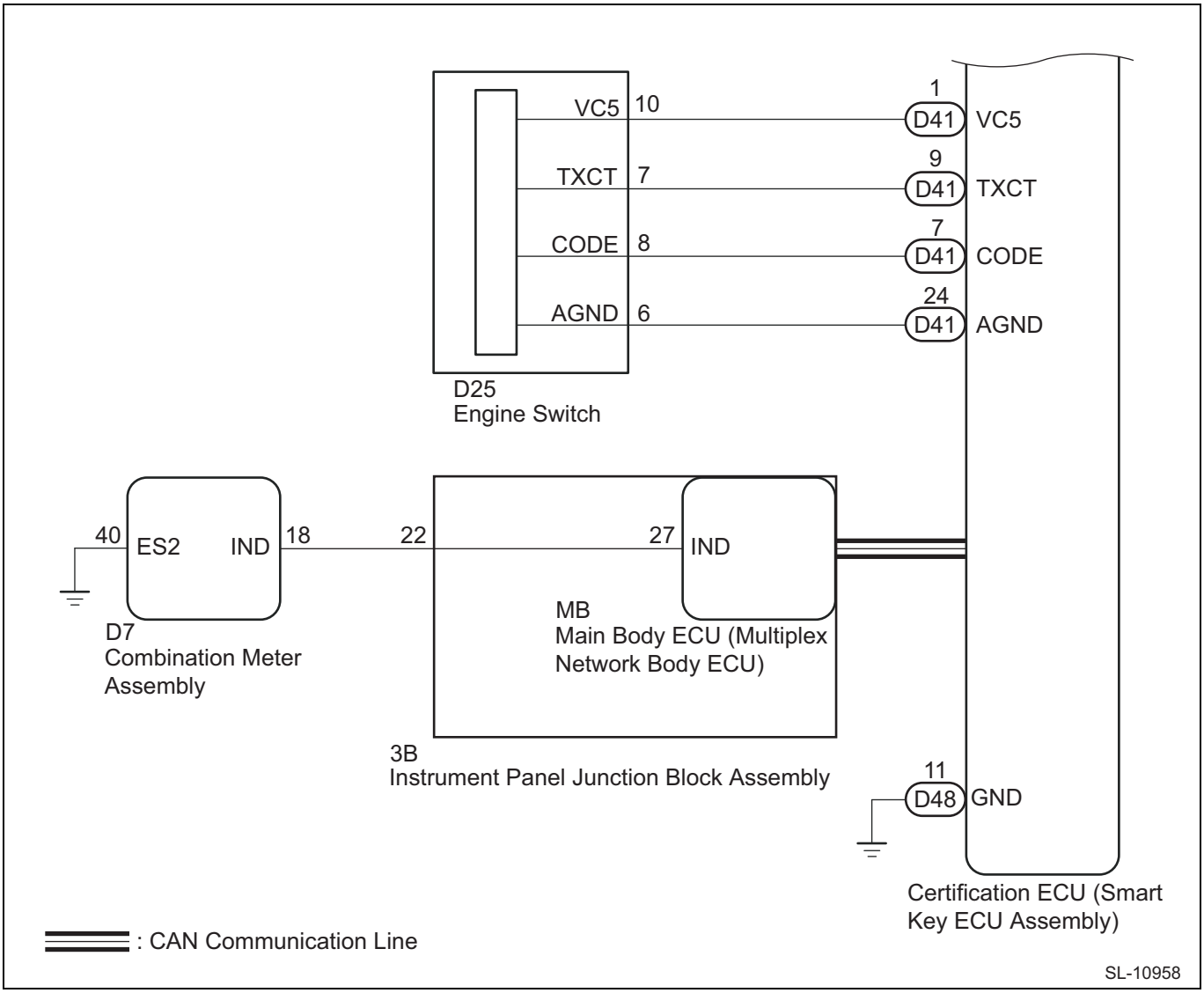

Functions of the main parts

Parts	Function
Collation ECM (smart key ECM ASSY)	• This identifies and confirms the ID code from the door control receiver and sends the signal to the steering lock actuator ASSY (steering lock ECM) according to the operation function. • This performs the code communication of ID code box (immobilizer code ECM) and steering lock actuator ASSY (steering lock ECM) during engine starting. * 1 • This performs the code communication with the steering lock actuator ASSY (steering lock ECM) during engine starting. * 2
Engine switch	• This sends the engine switch operation signal to the collation ECM (smart key ECM ASSY). • This sends the ID code to the collation ECM (smart key ECM ASSY) after receiving ID code from the key, when the transmitter battery is run-out, using the built-in transporter key amplifier (smart key ECM ASSY).
ID code box (immobilizer code ECM)*1	This sends the immobilizer set/not set command to the ECM after receiving it from the collation ECM (smart key ECM ASSY) via LIN communication.
ECM	This starts the engine after receiving the immobilizer not set command from the ID box (immobilizer code ECM)*1 or the collation ECM (smart key ECM ASSY)*2 or after receiving the engine start request signal from the collation ECM (smart key ECM ASSY).
Steering lock actuator ASSY (steering lock ECM)	This unlocks the steering lock after receiving the steering lock/unlock signal from the collation ECM (smart key ECM ASSY) or ID code box (immobilizer code ECM). * 1 This unlocks the steering lock after receiving the steering lock/unlock signal from the collation ECM (smart key ECM ASSY). * 2

*1: With ID code box
*2: Without ID code box

Description of functions

1. Description of engine immobilizer system
   (1) The engine immobilizer system judges the EFI system starting capability, based on the key ID code and the code already registered to the vehicle. The engine immobilizer system compares the ID code registered in vehicle collation ECM (smart key ECM ASSY) with the transponder chip ID code built in the electrical key transmitter SUB-ASSY. If these ID codes do not match, the engine immobilizer system operates and EFI system can not be started. The collation ECM (smart key ECM ASSY) controls the communication with the EFI system, steering lock actuator ASSY (steering lock ECM), ID code box (immobilizer code ECM)*. If ID codes of the transponder chip and ECM (smart key ECM ASSY) match, the collation ECM (smart key ECM ASSY) permits the EFI system starting.

*: The ID code box is included.

2. System functions
   (1) Push button start function
      (a)When the driver (or passenger) enters inside the vehicle while holding the electrical key transmitter SUB-ASSY, and depresses the brake pedal*1 or clutch pedal*2, the collation ECM (smart key ECM ASSY) recognizes that the brake pedal*1 or clutch pedal*2 is depressed, and sends the electrical key transmitter SUB-ASSY collation request signal to the inside vehicle electrical key antenna. When the request signal is received, the inside vehicle electrical key antenna sends other signal to detect whether the electrical key transmitter SUB-ASSY is inside the vehicle. When the electrical key transmitter SUB-ASSY receives this request signal, it returns the ID code including the response code. The ID code sent from the electrical key transmitter SUB-ASSY is sent to the collation ECM (smart key ECM ASSY) via the door control receiver. When the ID code is received, the collation ECM (smart key ECM ASSY) analyzes the code. If the collation result is normal, the entry key indicator light in the combination meter ASSY illuminates in green. When the indicator lights up green and the driver pushes the engine switch, the collation ECM (smart key ECM ASSY) recognizes the engine start signal, and turns on the ACC relay and IG1 relay and IG2 relay respectively. At this time, it recognizes that the power supply mode of the collation ECM (smart key ECM ASSY) has been changed, and sends the electrical power to the steering lock actuator. Then, (via the ID code box (immobilizer code ECM))*3 the steering lock actuator ASSY (steering lock ECM) recognizes that the collation ECM (smart key ECM ASSY) is the suitable ECM and drives the steering actuator motor until the steering lock unlocks. When the steering lock is unlocked, the steering lock actuator ASSY (steering lock ECM) transmits an unlock completion signal to the collation ECM (smart key ECM ASSY). If there is an ID code box, when this signal is received, the collation ECM (smart key ECM ASSY) sends the immobilizer not set command signal to the ID code box (immobilizer code ECM). When this signal is received, the ID code box (immobilizer code ECM) sends the immobilizer not set command signal to the EFI system after confirming that the collation ECM (smart key ECM ASSY) is the suitable ECM. If there is no ID code box, when this signal is received, the collation ECM sends the immobilizer not set command signal to the EFI system.

*1: With automatic transmission
*2: With manual transmission
*3: With ID code box
*4: Without ID code box

HOW TO PROCEED WITH TROUBLESHOOTING

NOTE:

- Use these procedures to troubleshoot the engine immobiliser system.
- *: Use the SSM4.

1	VEHICLE BROUGHT TO WORKSHOP

NEXT

2	INSPECT BATTERY VOLTAGE

Standard voltage: 11 to 14V

If the voltage is below 11V, recharge or replace the battery before proceeding.
NOTE:
A simple method to determine whether the battery is depleted is to operate the horn.

NEXT

3	TURN ENGINE SWITCH ON (IG)

NEXT

4	Communication function inspection of the CAN communication system

(1) Check CAN communication system. (Refer to NW - 30)
Result

Result	Proceed to
Functioning properly	A
Not functioning properly	B

B → Go to "CAN communication system (How to troubleshoot)" (Refer to NW - 30).

A

5	Communication function inspection of large-scale multiplex communication system for vehicle body [LIN]

(1) Perform a function check of the large-scale multiplex communication system for vehicle body [LIN] to see that no abnormal condition is present in the communication system. (Refer to NW - 5)
Result

Result	Proceed to
Functioning properly	A
Not functioning properly	B

B → To Large-scale multiplex communication system for vehicle body [LIN] (How to troubleshoot) (Refer to NW - 5)

A

6	CHECK FOR DTC (ENTRY AND START SYSTEM)*

(1) Check for DTCs and make a note of any codes that are output.
(2) Clear the DTCs. (See page TD - 250)
(3) Recheck for DTCs. Based on the DTCs output above, try to duplicate the engine immobiliser system DTC or steering lock system DTC by simulating the symptoms indicated by the DTCs.
Result

Result	Proceed to
DTC is not output	A

Result	Proceed to
Steering lock system DTC is output (DTC B2781, B2782 or B2788)	B
Engine immobiliser system DTC is output (except DTC B2781, B2782 and B2788)	C

B → Go to "steering lock system (List of diagnostic codes)" (Refer to SR - 4)

C → GO TO DIAGNOSTIC TROUBLE CODE CHART (See page TD - 255)

A

7	CHECK FOR DTC (ECD SYSTEM OR EFI SYSTEM)*

(1) Clear the DTCs. (Refer to TD - 250)
(2) Check for DTCs. (Refer to TD - 250)
NOTE:
The DTCs for the engine immobiliser system are specified above. If other codes are output, check the DTC chart for the EFI system.

Result

Result	Proceed to
DTC is not output	A
Engine immobiliser system DTC is output (DTC B2799, B279A or B279C)	B
EFI system DTC is output)	C

B → GO TO DIAGNOSTIC TROUBLE CODE CHART (See page TD - 255)

C → To EFI system (list of diagnostic codes) (Refer to ES - 12)

A

8	PROBLEM SYMPTOMS TABLE

(1) Refer to Problem Symptoms Table. (See page TD - 240)

Result

Result	Proceed to
Fault is not listed in problem symptoms table	A
Fault is listed in problem symptoms table	B

B → Go to step 10

A

9	OVERALL ANALYSIS AND TROUBLESHOOTING*

(1) Check Data monitor / active Test (See page TD - 250).
(2) Check ECM terminal arrangement. (See pageTD - 241)

NEXT

10	ADJUST, REPAIR OR REPLACE

NEXT

11	CHECK FOR DTC*

(1) Clear the DTCs. (See page TD - 250)
(2) Check for DTCs. (See page TD - 250)
NOTE:
Before checking for DTCs, perform the "DTC Output Confirmation Operation" of each diagnostic procedure. (See page TD - 255)

Result

Result	Proceed to
DTC is not output	A
Engine immobiliser system DTC is output	B

B → GO TO DIAGNOSTIC TROUBLE CODE CHART (See page TD - 255)

A

END

PROBLEM SYMPTOMS TABLE

NOTE:

- Use the table below to help determine the cause of problem symptoms. If multiple suspected areas are listed, the potential causes of the symptoms are listed in order of probability in the "Suspected Area" column of the table. Check each symptom by checking the suspected areas in the order they are listed. Replace parts as necessary.
- Inspect the fuses and relays related to this system before inspecting the suspected areas below.
- If the problem only occurs in certain locations or at certain times of day, check for wave interference.
- If the vehicle components are added, check for wave interference from the added components.

Engine Immobiliser System

Symptom	Suspected Area	See page
Engine cannot be started*1	Certification ECU (smart key ECU assembly)	-
Engine cannot be started*2	ID code box (immobiliser code ECU)*1	TD - 248
	ECM	TD - 248
	EFI system	TD - 248
Power source mode cannot be changed*2	Engine switch	TD - 248
	Certification ECU (smart key ECU assembly)	TD - 248
Steering lock lock/unlock not possible*3	Steering lock actuator assembly (steering lock ECU)	TD - 248

*1: w/ ID Code Box

*2: Refer to Problem Symptoms Table for Entry and Start System (for Start Function) (Refer to TD - 156)

*3: Refer to Problem Symptoms Table for Steering Lock System (Refer to SR - 4)

ECM terminal arrangement

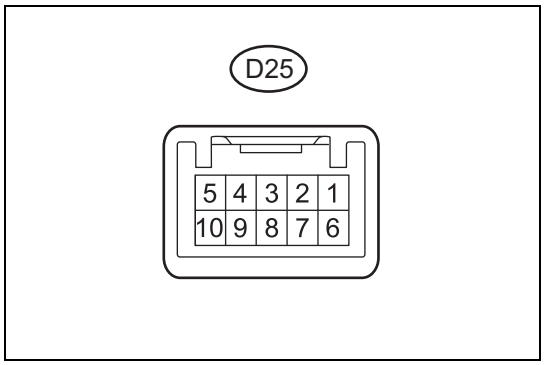

1. Check the engine switch.
   (1) Measure the resistance and voltage based on the following table.

Terminal No. (symbol)	Input/output	Terminal description	Conditions	Specified condition	Related [Data monitor] item / DTC
D25-6 (AGND) - Chassis ground	-	Transponder key amplifier GND-output short	Always	1 Ωor less	-
D25-7 (TXCT) - D25-6 (AGND)	Input	Clock signal	When IG OFF, and the brake pedal*1 or clutch pedal*2 is depressed, and after 30 seconds or more have passed after the driver opens and closes the door.	1 V or less	-
D25-8 (CODE) - D25-6 (AGND)	Input/output	Dual directional data communication	When IG OFF, and the brake pedal*1 or clutch pedal*2 is depressed, and after 30 seconds or more have passed after the driver opens and closes the door.	1 V or less	-
D25-10 (VC5) - D25-6 (AGND)	Input	Transponder key amplifier power supply	When IG OFF, and the brake pedal*1 or clutch pedal*2 is depressed, and after 30 seconds or more have passed after the driver opens and closes the door.	1 V or less	-

*1: With automatic transmission
*2: With manual transmission

(2) Confirm the pulse based on the following table.

Terminal No. (symbol)	Input/output	Terminal description	Conditions	Specified condition	Related [Data monitor] item / DTC
D25-7 (TXCT) - D25-6 (AGND)	Input	Clock signal	IG is turned OFF, the key is brought outside the vehicle, and within 30 seconds after the engine switch is pushed.	Pulse generation (Refer to waveform 1)	• BCC fault • Abnormal condition • Different encryption code • Different serial code NOTE: If the immobilizer key code collation communication is not operated correctly, the fault may be displayed in one or several items listed in the [Data monitor] described above.
D25-8 (CODE) - D25-6 (AGND)	Output	Dual directional data communication	IG is turned to OFF, the key is held above the engine switch, and the engine switch is pushed*.	Pulse generation (Refer to waveform 2)	
D25-10 (VC5) - D25-6 (AGND)	Input	Transponder key amplifier power supply	IG is turned OFF, the key is brought outside the vehicle, and within 30 seconds after the engine switch is pushed.	Pulse generation (Refer to waveform 3)	

NOTE:
*: Before performing this inspection, remove the transmitter battery.

(3) Inspect using an oscilloscope.
CAUTION:
The waveform shown in the figure is an example for reference. The noise and chattering are not shown in the figure.

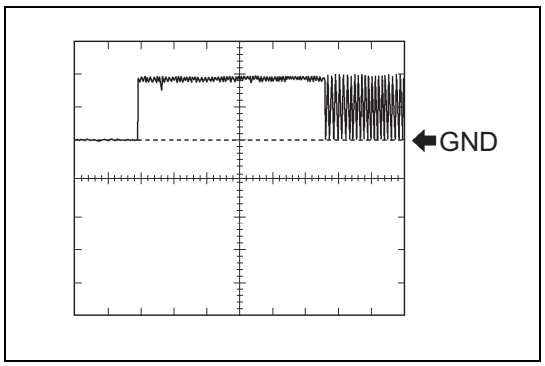

(a)Waveform 1 (reference)

Measuring conditions

Item	Contents
Tester connection	D25-7 (TXCT) - D25-6 (AGND)
Tool setting	2V/DIV., 200ms./DIV.
Conditions	IG is turned OFF, the key is brought outside the vehicle, and within 30 seconds after the engine switch is pushed.

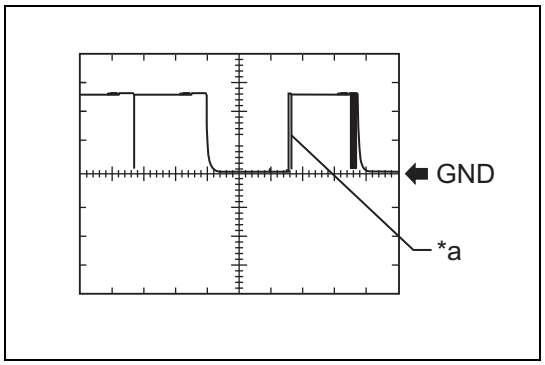

(b)Waveform 2 (reference)

Captions in illustration

*a	Hold the key above the engine switch.

Measuring conditions

Item	Contents
Tester connection	D25-8 (CODE) - D25-6 (AGND)
Tool setting	2V/DIV., 200ms./DIV.
Conditions	IG is turned to OFF, the key is held above the engine switch, and the engine switch is pushed*.

NOTE:
*: Before performing this inspection, remove the transmitter battery.

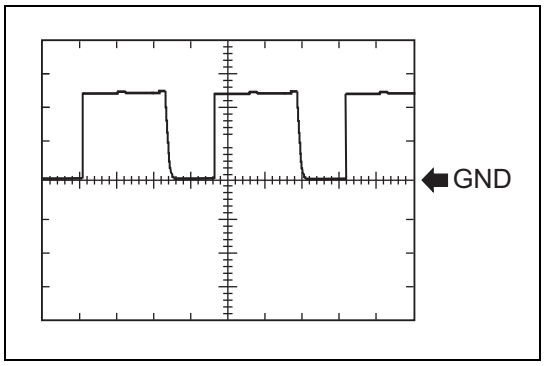

(c)Waveform 3 (reference)

Measuring conditions

Item	Contents
Tester connection	D25-10 (VC5) - D25-6 (AGND)
Tool setting	2V/DIV., 200ms./DIV.
Conditions	IG is turned OFF, the key is brought outside the vehicle, and within 30 seconds after the engine switch is pushed.

2. Check the collation ECM (smart key ECM ASSY).

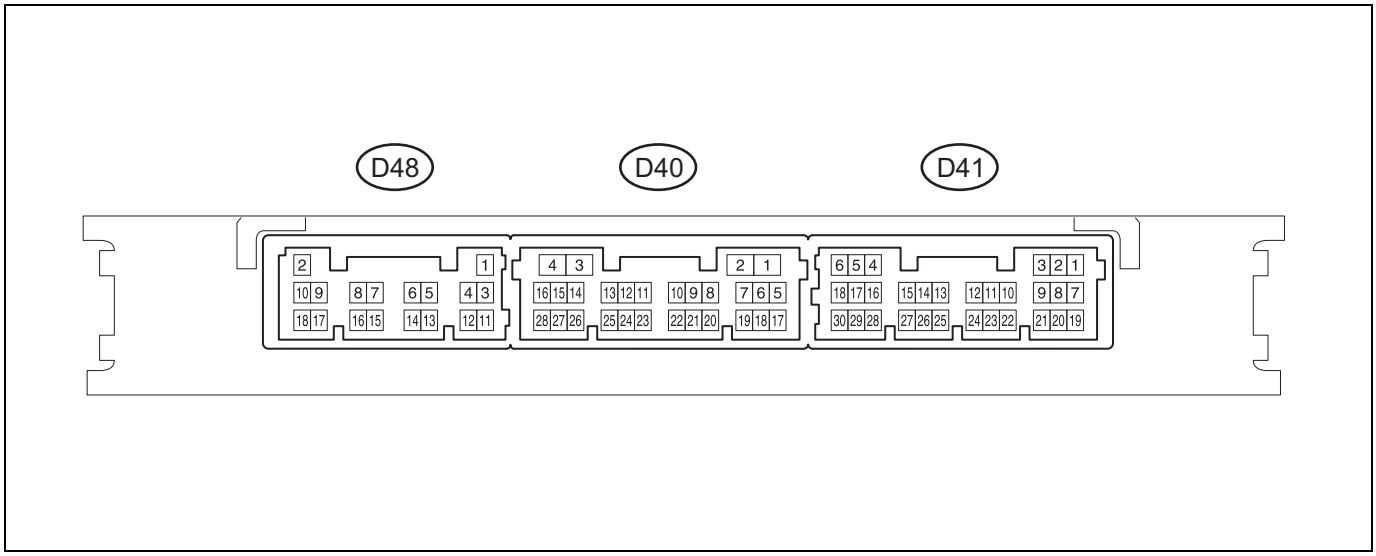

(1) Disconnect the D48 collation ECM (smart key ECM ASSY) connector.
(2) Measure the resistance and voltage based on the following table.

Terminal No. (symbol)	Input/output	Terminal description	Conditions	Specified condition	Related [Data monitor] item / DTC
D48-2 (+B) - D48- 11 (GND)	Input	+B power supply	Always	11 to 14 V	-
D48-11 (GND) - Chassis ground	-	Ground	Always	1 Ωor less	-

(3) Reconnect the D48 connector of the collation ECM (smart key ECM ASSY).
(4) Measure the resistance and voltage based on the following table.

Terminal No. (symbol)	Input/output	Terminal description	Conditions	Specified condition	Related [Data monitor] item / DTC
D41-5 (IG2) - D48-11 (GND)	Input	Engine switch power supply	Engine switch OFF →ON (IG)	1V or less →11 to 14V	[Ignition]
D41-9 (TXCT) - D41-24 (AGND)	Output	Clock signal	When IG OFF, and the brake pedal*1 or clutch pedal*2 is depressed, and after 30 seconds or more have passed after the driver opens and closes the door.	1 V or less	• BCC fault • Abnormal condition • Different encryption code • Different serial code
D41-7 (CODE) - D41-24 (AGND)	Input	Signal input from transponder key amplifier power	When IG OFF, and the brake pedal*1 or clutch pedal*2 is depressed, and after 30 seconds or more have passed after the driver opens and closes the door.	1 V or less	
D41-1 (VC5) - D41-24 (AGND)	Output	Transponder key amplifier power supply	When IG OFF, and the brake pedal*1 or clutch pedal*2 is depressed, and after 30 seconds or more have passed after the driver opens and closes the door.	1 V or less	
D41-24 (AGND) - chassis ground	-	Transponder key amplifier GND-output short	Always	1 Ωor less	

Terminal No. (symbol)	Input/output	Terminal description	Conditions	Specified condition	Related [Data monitor] item / DTC
D48-13 (EFIO) -D48-11 (GND)*3	Input/output	EFI communication signal (from collation ECM (smart key ECM ASSY) to ECM)	IG ON	11 to 14V	• B1571 • B1572 • Engine start request • EFI code reception

*1: With automatic transmission
*2: With manual transmission
*3: Without ID code box

(5) Confirm the pulse based on the following table.

Terminal No. (symbol)	Input/output	Terminal description	Conditions	Specified condition	Related [Data monitor] item / DTC
D41-9 (TXCT) - D41-24 (AGND)	Output	Clock signal	IG is turned OFF, the key is brought outside the vehicle, and within 30 seconds after the engine switch is pushed.	Pulse generation (Refer to waveform 1)	• BCC fault • Abnormal condition • Different encryption code • Different serial code
D41-7 (CODE) - D41-24 (AGND)	Input	Signal input from transponder key amplifier power	IG is turned to OFF, the key is held above the engine switch, and the engine switch is pushed*1.	Pulse generation (Refer to waveform 2)	
D41-1 (VC5) - D41-24 (AGND)	Output	Transponder key amplifier power supply	IG is turned OFF, the key is brought outside the vehicle, and within 30 seconds after the engine switch is pushed.	Pulse generation (Refer to waveform 3)	
D48-13 (EFIO) -D48-11 (GND)*2	Input/output	EFI communication signal (from collation ECM (smart key ECM ASSY) to ECM)	Engine switch OFF →ON (IG)	Pulse generation (Refer to waveform 4)	• B1571 • B1572 • Engine start request • EFI code reception

*1: Before performing this inspection, remove the transmitter battery.
*2: Without ID code box

(6) Inspect using an oscilloscope.
CAUTION:
The waveform shown in the figure is an example for reference. The noise and chattering are not shown in the figure.

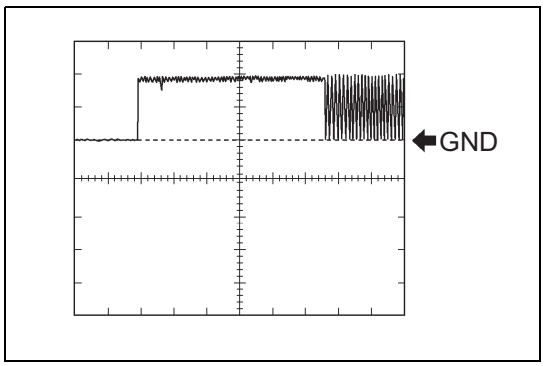

(a)Waveform 1 (reference)

Measuring conditions

Item	Contents
Tester connection	D41-9 (TXCT) - D41-24 (AGND)
Tool setting	2V/DIV., 200ms./DIV.
Conditions	IG is turned OFF, the key is brought outside the vehicle, and within 30 seconds after the engine switch is pushed.

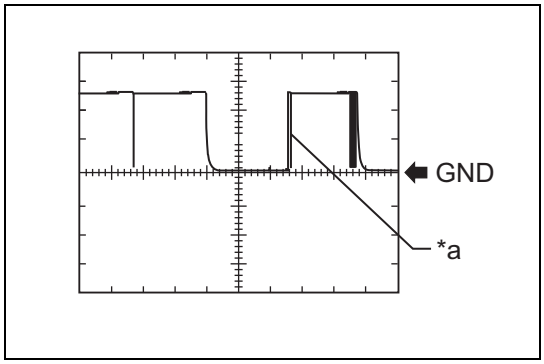

(b)Waveform 2 (reference)

Captions in illustration

*a	Hold the key above the engine switch.

Measuring conditions

Item	Contents
Tester connection	D41-7 (CODE) - D41-24 (AGND)
Tool setting	2V/DIV., 200ms./DIV.
Conditions	IG is turned to OFF, the key is held above the engine switch, and the engine switch is pushed*.

NOTE:

*: Before performing this inspection, remove the transmitter battery.

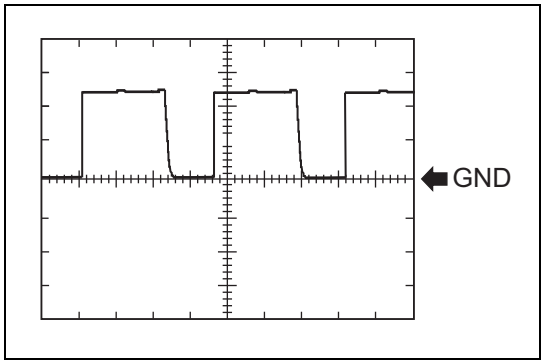

(c)Waveform 3 (reference)

Measuring conditions

Item	Contents
Tester connection	D41-1 (VC5) - D41-24 (AGND)
Tool setting	2V/DIV., 200ms./DIV.
Conditions	IG is turned OFF, the key is brought outside the vehicle, and within 30 seconds after the engine switch is pushed.

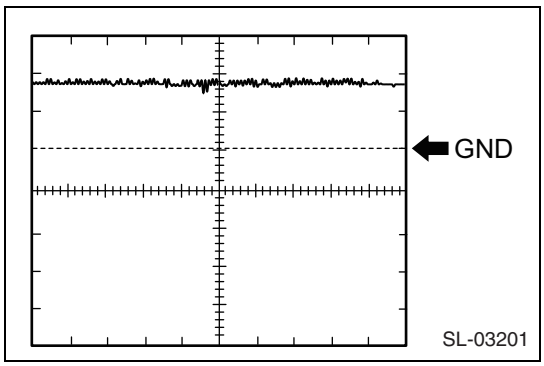

(d)Waveform 4 (reference)

Measuring conditions

Item	Contents
Tester connection	D48-13 (EFIO) - D48-11 (GND)
Tool setting	5 V / DIV., 100 ms. / DIV.
Conditions	Within 3 seconds after engine start, or within 3 seconds from engine switch ON (IG) after battery cable disconnection and reconnection

3. Confirm the ID code box (immobilizer code ECM) (with ID code box).

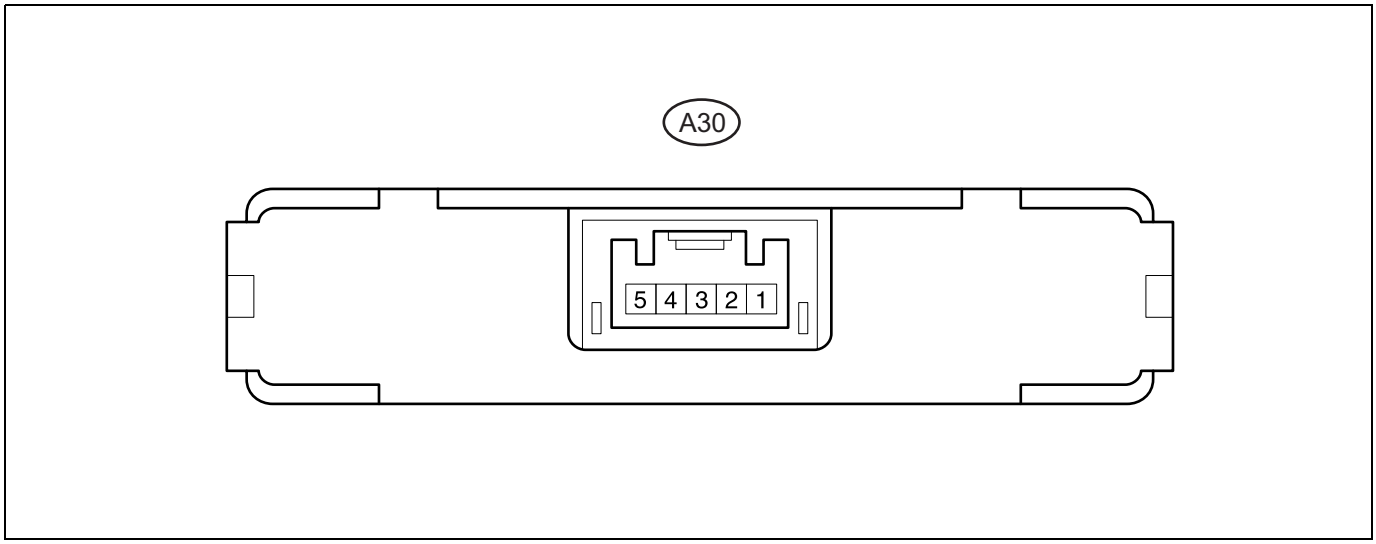

(1) Disconnect the connector A30 of the ID code box (immobilizer code ECM).

(2) Measure the resistance and voltage based on the following table.

Terminal No. (symbol)	Input/output	Terminal description	Conditions	Specified condition	Related [Data monitor] item / DTC
A30-1 (+B) - A30- 5 (GND)	Input	+B power supply	Always	11 to 14V	-
A30-5 (GND) - Chassis ground	-	Ground	Always	1 Ωor less	-

If the specified result is not obtained, there may be the defect in the wire harness side.

(3) Reconnect the connector A30 of the ID code box (immobilizer code ECM).

(4) Refer to the table below and measure the voltage and check for a pulse.

Terminal No. (symbol)	Input/output	Terminal description	Conditions	Specified condition	Related [Data monitor] item / DTC
A30-4 (IMO1) - A30-5 (GND)	Input/output	EFI communication signal (from ID code box (immobilizer code ECM) to ECM)	IG OFF	11 to 14V	• B1571 • B1572 • Engine start request • EFI code reception
		EFI communication signal (from ID code box (immobilizer code ECM) to ECM)	IG OFF →IG ON	Pulse generation (Refer to waveform 1)	

(5) Inspect using an oscilloscope.

CAUTION:

The waveform shown in the figure is an example for reference. The noise and chattering are not shown in the figure.

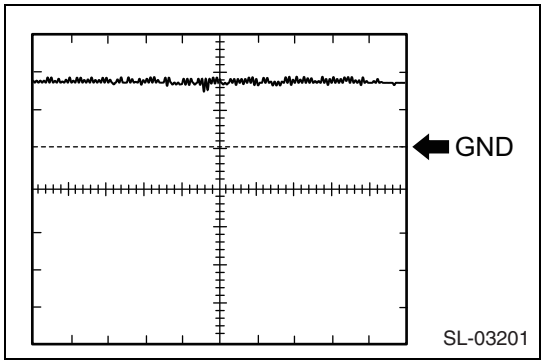

(a)Waveform 1 (reference)

Measuring conditions

Item	Contents
Tester connection	A30-4 (IMO1) - A30-5 (GND)
Tool setting	5 V / DIV., 100 ms. / DIV.
Conditions	IG OFF →IG ON

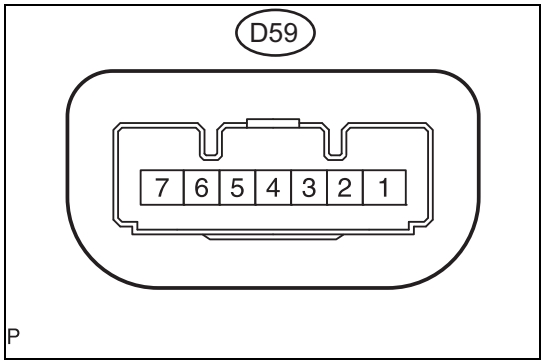

4. Confirm the steering lock actuator ASSY (steering lock ECM).

(1) Refer to the table below and measure the resistance and the voltage and check for a pulse.

Terminal No. (symbol)	Input/output	Terminal description	Conditions	Specified condition	Related [Data monitor] item / DTC
D59-1 (GND) - Chassis ground	-	Ground	Always	1 Ωor less	-

Terminal No. (symbol)	Input/output	Terminal description	Conditions	Specified condition	Related [Data monitor] item / DTC
D59-3 (SLR+) - Chassis ground	Input	Motor drive command signal sent from the steering lock motor drive command signal (collation ECM (smart key ECM ASSY)	After establishing the necessary conditions, the steering lock motor operates when any one of the doors opens. • Shift lever positioned in P*1 or N*2 • The key is held in hand and engine switch is ON (IG), and steering lock is unlocked beforehand. • If the above conditions are met turn off the engine switch.	Pulse generation (Refer to waveform 1)	• Power supply short • Unlock request reception • Lock request reception
D59-4 (SLR) - Chassis ground	Output	Steering lock bar position signal (output signal from steering unlock sensor)	Steering lock →unlock *3	11 to 14 V →1.2 V or less	• Push button start error • Sensor value
D59-6 (IGN1) - Chassis ground	Input	Power supply mode signal (IG2 power supply input for all steering lock actuator ASSY)	Engine switch OFF →ON (IG)	1V or less →11 to 14V	• B2788 • IG
D59-7 (B) - Chassis ground	Input	Power supply	Always	11 to 14V	B2788

*1: With automatic transmission

*2: With manual transmission

NOTE:

- *3: With shift lever positioned in P (for automatic transmission), if any one of the doors opens, the steering is locked and IG is turned OFF. With ACC ON, the steering is unlocked.

(2) Inspect using an oscilloscope.

CAUTION:

The waveform shown in the figure is an example for reference. The noise and chattering are not shown in the figure.

(a)Waveform 1 (reference)

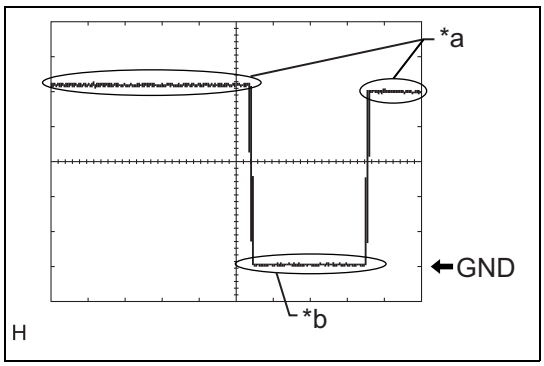

Captions in illustration

*a	The steering lock motor does not operate.
*b	The steering lock motor is operating.

Measuring conditions

Item	Contents
Tester connection	D59-3 (SLR+) - D59-1 (GND)
Tool setting	2V/DIV., 200ms./DIV.
Conditions	If both conditions are met, the steering motor operates and door opens: • Shift lever positioned in P* • The key is held in hand and engine switch is ON (IG), and steering lock is unlocked beforehand. • If the above conditions are met turn off the engine switch.

*1: With automatic transmission

5. CHECK ECM

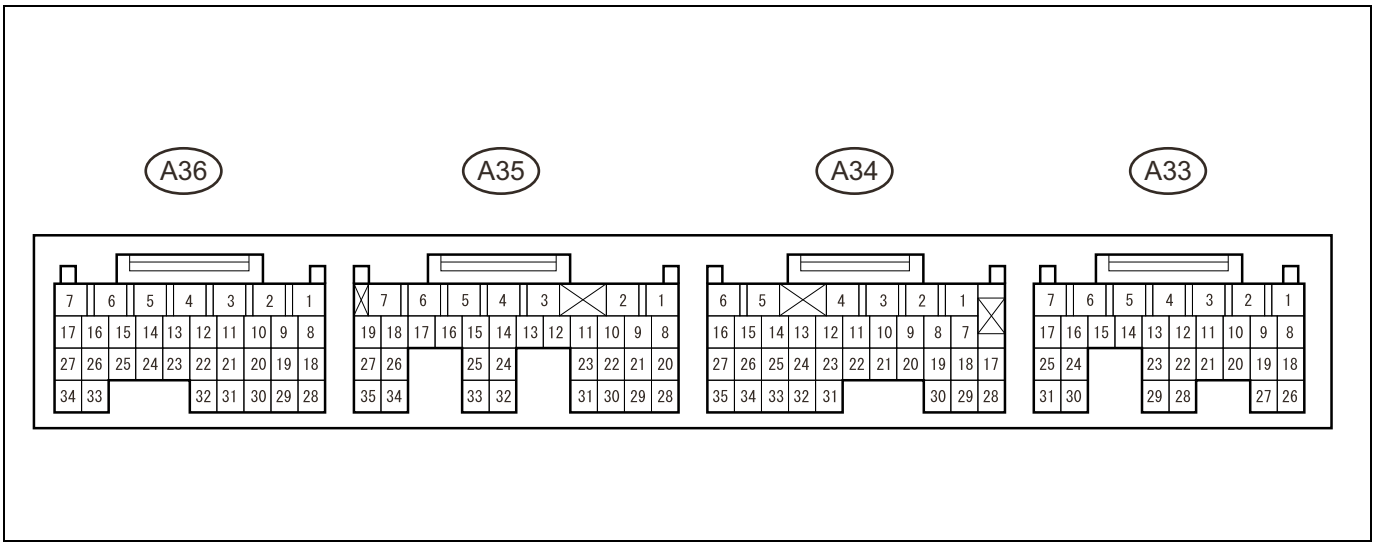

(1) Refer to the table below and measure the resistance and the voltage and check for a pulse.

TD

Terminal No. (symbol)	Input/output	Terminal description	Conditions	Specified condition	Related [Data monitor] item / DTC
A36-4 (GNDEG1) - Chassis ground	-	Ground	Always	1 Ωor less	-
A33-2 (BATT) - A36-4 (GNDEG1)	Input	+B power supply	Always	11 to 14 V	-
A33-1 (VBEC2) - A36-4 (GNDEG1)	Input	+B power supply	IG ON	11 to 14 V	-
A34-6 (VBEC1) - A36-4 (GNDEG1)	Input	+B power supply	IG ON	11 to 14 V	-
A35-25 (IMO1) - A36-4 (GNDEG1)	Input	ID code box (immobilizer code ECM) *1 or the collation ECM (smart key ECM ASSY) communication ID code box (immobilizer code ECM) communication input	IG OFF	11 to 14 V	-
			IG ON	Pulse generation (Refer to waveform 1)	-

*1: With ID code box

If you cannot get the specified result, there could be a problem in the ECM.

(2) Inspect using an oscilloscope.

CAUTION:

The waveform shown in the figure is an example for reference. The noise and chattering are not shown in the figure.

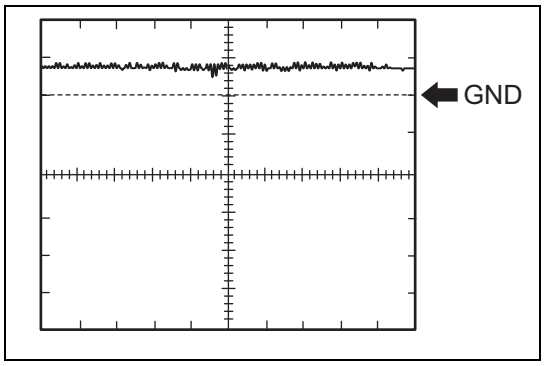

(a)Waveform 1 (reference)

Measuring conditions

Item	Contents
Tester connection	A30-4 (IMO1) - A30-5 (GND)
Tool setting	2V/DIV., 500ms./DIV.
Conditions	IG OFF →IG ON

Diagnosis system

1. Description of functions

(1) The collation ECM (smart key ECM ASSY) and ECM controls the vehicle engine immobilizer system function. The engine immobilizer system data and the list of diagnostic codes are read from vehicle data link connector 3 (DLC3).

In some cases, the engine immobilizer system may have defect even though the security indicator light does not illuminate.

If there may be a defect in the system, confirm the defects by using the SSM4 and repair them.

2. Check the DLC3.
   (1) Check the DLC3.
3. Check the battery voltage.
   (1) Measure the battery voltage.
   Voltage: 11 to 14 V
   If the voltage is 11 V or less, charge the battery or replace it.
4. Symptom that occurred in starting function

TROUBLE SYMPTOM	Part name	Trouble contents of each part	Expected DTC	Related [Data monitor]
Engine can not start *1	Collation ECM (smart key ECM ASSY)	Open or short circuit in ECM	• B278A • B1571 • B1572 • B1577	• IG • #Codes • Immobilizer when IG=ON • Immobilizer • Master key • Sub key • BCC fault • Abnormal condition • Different encryption code • Different serial code • Frame error • Response • Wireless starter communication ID • Wireless C code • ID box sleep status • ID box starting status • Engine start request • S code check • L code check • Unlock request reception • Lock request reception • S code check (past) • L code check (past) • EFI/EGI code reception • EFI communication
	ID code box (immobilizer code ECM)*3	Open or short circuit in ECM	• B1571 • B1572 • B1577	• Immobilizer when IG=ON • Immobilizer • Master key • Sub key • BCC fault • Abnormal condition • Different encryption code • Different serial code • Frame error • Response • ID box sleep status • ID box starting status • Engine start request • S code check • L code check • S code check (past) • L code check (past) • EFI/EGI code reception • EFI communication
	ECM	Open or short circuit in ECM	• B1571 • B1572 • B1576	EFI/EGI code reception
	EFI system	ECM is not compatible with the engine immobilizer system that is installed.	• B1571 • B1572	EFI/EGI code reception
Power supply mode does not change *1	Engine switch	Open or short circuit in switch	B278A	• IG • Unlock request reception • Lock request reception
	Collation ECM (smart key ECM ASSY)	Open or short circuit in ECM	• B2271 • B2274	• IG • Immobilizer when IG=ON • Immobilizer

TD

TROUBLE SYMPTOM	Part name	Trouble contents of each part	Expected DTC	Related [Data monitor]
The steering lock can not lock/ unlock * 2.	Steering lock ECM (steering lock actuator ASSY)	• Open or short circuit in ECM • Actuator stuck	• B2781 • B2782 • B2788	• Unlock request reception • Lock request reception

*1: Refer to the symptom list of the entry & start system (start function).
*2: Refer to the symptom list of the steering lock system.
*3: With ID code box

DTC CHECK / CLEAR

1. CHECK FOR IMMOBILISER DTC
   (1) Connect the SSM4 to the DLC3.
   (2) Turn the engine switch on (IG).
   (3) Turn the SSM4 on.
   (4) Enter the following menus: [Keyless Access(Collation ECM)] →[DTC]
   (5) Check for DTCs.
2. CHECK FOR ECM DTC
   (1) Connect the SSM4 to the DLC3.
   (2) Turn the engine switch on (IG).
   (3) Turn the SSM4 on.
   (4) Enter the following menus: [Engine Control System] →[DTC]
   (5) Check for DTCs.
3. CLEAR IMMOBILISER DTC
   (1) Connect the SSM4 to the DLC3.
   (2) Turn the engine switch on (IG).
   (3) Turn the SSM4 on.
   (4) Enter the following menus: [Keyless Access(Collation ECM)] →[DTC] →[Clear Memory]
   (5) Clear the DTCs.
4. CLEAR ECM DTC
   (1) Connect the SSM4 to the DLC3.
   (2) Turn the engine switch on (IG).
   (3) Turn the SSM4 on.
   (4) Enter the following menus: [Engine Control System] →[DTC] →[Clear Memory]
   (5) Clear the DTCs.

TD

Data monitor / active test

1. [Data monitor]
   CAUTION:
   In the following table, the value listed in the normal condition is a reference value. Do not depend on reference value only when judging if the part is faulty.
   NOTE:
   By using the SSM4 and reading [Data monitor], you can read the statuses and values for switches, sensors, actuators, and other items without removing parts. Because the non-intrusive inspection allows you to read the intermittent statuses or signals without interfering with parts or lines, it is very convenient. Diagnostic time can be saved by reading the [Data monitor] information at the initial stage of the troubleshooting.
   (1) Connect the SSM4 to the DLC3.
   (2) Turn the ignition switch to ON.
   (3) Turn on the SSM4.
   (4) Enter the following menus: [Keyless Access(Collation ECM)] →[Data monitor]
   (5) Based on the contents of the SSM4 display, read the [Data monitor].

Entry & Start

Item Name	Description/display range	Normal value	Remarks
[Ignition]	Engine switch condition / OFF or ON	OFF: IG OFF ON: Engine switch is ON (IG)	Using this [Data monitor] item, identify the cause when all entry & start system/wireless functions do not operate.

Item Name	Description/display range	Normal value	Remarks
[IG = ON, immobilizer set condition established]	Engine immobilizer system condition when the power supply mode is ON (IG) / Unset or Set	Unset: It is not set when the engine immobilizer system is engine switch ON (IG). Or the engine immobilizer system releases the setting for 40 times after setting. Set: When the engine immobilizer system is set (driver's door opens/closes with engine switch ON (IG).	-
[Immobilizer]	The engine immobilizer system condition is judged by the collation ECM (smart key ECM ASSY) / Unset or Set	Set: Engine immobilizer set (engine start prohibited) (engine switch OFF) Unset: Engine immobilizer unset (engine start permitted) [engine switch ON (ACC) or (IG)]	When [Setup] is displayed, the engine start function is prohibited.
[Master Key]	Whether the master key ID code matches with the ID code registered in the collation ECM (smart key ECM ASSY) / Does not match, or match	Does not match: The master key ID code does not match with the ID code registered in the collation ECM (smart key ECM ASSY). Match: The master key ID code matches with the ID code registered in the collation ECM (smart key ECM ASSY).	• Always [Match] is displayed. • Without the diagnosis function
[Sub Key]	Whether the sub key ID code matches with the ID code registered in the collation ECM (smart key ECM ASSY) / Does not match, or match	Match: The sub key ID code matches with the ID code registered in the collation ECM (smart key ECM ASSY). Does not match: The sub key ID code does not match with the ID code registered in the collation ECM (smart key ECM ASSY).	• Always [Match] is displayed. • Without the diagnosis function
[BCC Malfunction]	Transponder chip BCC signal condition * 1 / OK or NG	OK: BCC signal normal NG: BCC signal fault (fault in the code calculation function for key / collation ECM (smart key ECM ASSY))	The following may be the cause: • Communication error caused by the noise entering from outside (LF). • Defect in the electrical key transmitter SUB-ASSY or the collation ECM (smart key computer ASSY)
[Abnormal Status]	Transponder chip condition signal * 1 / OK or NG	OK: Transponder chip condition signal normal NG: Transponder chip condition signal fault (fault in the code calculation function for key / collation ECM (smart key ECM ASSY))	The following may be the cause: • Communication error caused by the noise entering from outside (LF). • Defect in the electrical key transmitter SUB-ASSY or the collation ECM (smart key computer ASSY)
[Incorrect Encryption]	Code condition between the transponder chip and collation ECM (smart key ECM ASSY) * 1 / OK or NG	OK: Code of the transponder chip and collation ECM (smart key ECM ASSY) matches. NG: Code of the transponder chip and collation ECM (smart key ECM ASSY) does not match.	The following may be the cause: • The electrical key transmitter SUB-ASSY of another vehicle is used. • Defect in the electrical key transmitter SUB-ASSY or the collation ECM (smart key computer ASSY)
[Incorrect Serial No.]	Vehicle serial No. * 1 / OK or NG	OK: Signal from the transponder chip and the vehicle serial No. outputs to the collation ECM (smart key ECM ASSY) matches. NG: Signal from the transponder chip and the vehicle serial No. outputs to the collation ECM (smart key ECM ASSY) does not match.	The following may be the cause: • The electrical key transmitter SUB-ASSY of another vehicle is used. • Defect in the electrical key transmitter SUB-ASSY or the collation ECM (smart key computer ASSY)
[Frame error]	The data condition sent from the electrical key transmitter SUB-ASSY / OK or NG	OK: No problems in the data sent from the electrical key transmitter SUB-ASSY NG: Problems in the data sent from the electrical key transmitter SUB-ASSY	• Always [OK] is displayed. • Without the diagnosis function

TD

Item Name	Description/display range	Normal value	Remarks
[Sleep possible status]	ID code box (immobilizer code ECM) is in sleep mode condition / No or Yes	No: ID code box (immobilizer code ECM) does not enter to the sleep mode. Yes: ID code box (immobilizer code ECM) enters to the sleep mode.	-
[Wake-up transmission status]	ID code box (immobilizer code ECM) condition *3 / No or Yes	No: ID code box (immobilizer code ECM) does not send the wake-up signal. Yes: ID code box (immobilizer code ECM) sends the wake-up signal.	-
[EFI/EGI code reception status]	The request for engine start permission sent from the collation ECM (smart key ECM ASSY) to the ID code box (immobilizer code ECM)* 3 / OK or NG	OK: The engine start permission request signal that the ID code box (immobilizer code ECM)*9, or collation ECM (smart key ECM ASSY)*10 receives from the collation ECM (smart key ECM ASSY) NG: The ID code box (immobilizer code ECM)*9, or collation ECM (smart key ECM ASSY)*10 does not receive the engine start permission request signal.	If [OK] is not displayed, the ECM cannot release the immobilizer setting.
[S Code Check] *9	S code check result * 4 / OK or NG	OK: S code check result is normal. NG: S code check result is abnormal.	The following may be the cause: • The registration setting is not performed for the collation ECM (smart key ECM ASSY) or ID code box (immobilizer code ECM). • There are defects in the collation ECM (smart key ECM ASSY) or ID code box (immobilizer code ECM).
[L Code Check]	L code check result * 5 / OK or NG	OK: L code check result is normal. NG: L code check result is abnormal.	The following may be the cause: • The registration setting is not performed for the collation ECM (smart key ECM ASSY) or lock actuator ASSY (steering lock ECM). • There are defects in the collation ECM (smart key ECM ASSY) or steering lock actuator (steering lock ECM).
[Steering lock unlock request reception status]	Steering unlock command condition from the collation ECM (smart key ECM ASSY) * 6 / OK or NG	OK: The collation ECM (smart key ECM ASSY) sends the steering unlock command (within 10 seconds after engine switch is ON (ACC) or ON (IG), or within 10 seconds after engine starting operation) NG: The collation ECM (smart key ECM ASSY) does not send the steering unlock command (engine switch does not turn ON (ACC) or ON (IG), or engine starting operation cannot be performed)	Even when the steering lock is unlocked, if the [OK] is not displayed, the collation ECM (smart key ECM ASSY) may be defective.
[Steering lock lock request reception status]	Steering lock command condition from the collation ECM (smart key ECM ASSY) * 7 / OK or NG	OK: The collation ECM (smart key ECM ASSY) sends the steering unlock command (within 10 seconds after the door opens/closes when the engine switch is OFF with the shift lever in P* 11). NG: The collation ECM (smart key ECM ASSY) does not send the steering unlock command (the door does not open/close when the engine switch is OFF with the shift lever in P* 11)	Even when the steering lock condition is met, if the [OK] is not displayed, the collation ECM (smart key ECM ASSY) may be defective.

Item Name	Description/display range	Normal value	Remarks
[S Code Check(Past)]	S code check result (past) / OK or NG (past)	OK: Confirmation operation finished (past). NG (past): Confirmation operation has not finished (past).	-
[L Code Check(Past)]	L code check result (past) / OK or NG (past)	OK: Confirmation operation finished (past). NG (past): Confirmation operation has not finished (past).	-
[Engine Start Request]	Recognition information that is sent to the ID code box (immobilizer code ECM) from ECM, when the ECM receives the engine start permission signal from the ID code box (immobilizer code ECM)*8. / OK or NG	OK: The ID code box (immobilizer code ECM)*9, or collation ECM (smart key ECM ASSY)*10 receives the signal sent from ECM in order to release the engine immobilizer setting. NG: The ID code box (immobilizer code ECM)*9, or collation ECM (smart key ECM ASSY)*10 does not receive the signal sent from ECM in order to release the engine immobilizer setting.	-
[EFI/EGI Communication]	Communication status to release the immobilizer setting between the collation ECM (smart key ECM ASSY) and ECM / NG or OK	NG: Communication to release the immobilizer setting between the collation ECM (smart key ECM ASSY) and ECM does not start. OK: Communication to release the immobilizer setting between the collation ECM (smart key ECM ASSY) and ECM starts.	Even when the condition to release the immobilizer setting is met, if the [NG] is displayed in the items and [OK] is displayed in the items in the engine start request, ECM may be defective. If the engine cannot be started, use this [Data monitor] while the troubleshooting is performed.

NOTE:

- *1: This indicates that there is a problem in the communication type between the electrical key transmitter SUB-ASSY and the collation ECM (smart key ECM ASSY). Possible fault causes include the external radio waves, or the faulty electrical key transmitter SUB-ASSY, or collation ECM (smart key ECM ASSY), use of other vehicle electrical key transmitter SUB-ASSY.
- *2: This indicates that the wake-up signal communication is possible. ([Yes] indicates that the LIN communication signal is sent to start the confirmation operation.) If the steering lock motor operates normally and IGE ON signal is received (steering lock work request), or the communication occurs between the ID code box (immobilizer code ECM)*9, or collation ECM (smart key ECM ASSY)*10 and ECM, the displayed item is changed to [Yes].
- *3: This indicates that the engine start permission request signal (EGST) output sent from ECM (smart key ECM ASSY) is received by the ID code box (immobilizer code ECM)*9 or the collation ECM (smart key ECM ASSY)*10.
- *4: This indicates the collation results of the collation code for the collation ECM (smart key ECM ASSY) and ID code box (immobilizer code ECM) collation code.
- *5: This indicates the collation results of the collation code for the steering lock actuator ASSY (steering lock ECM) and the ID code box (immobilizer code ECM) *9 or collation ECM (smart key ECM ASSY)*10.
  - When the steering lock actuator ASSY (steering lock ECM) receives the unlock request from the collation ECM (smart key ECM ASSY), the confirmation operation for ID code box (immobilizer code ECM) L code is performed. When the L code is matched, the steering lock actuator ASSY (steering lock ECM) unlocks the steering. But when the S code check result is not matched, the steering lock does not unlock.
- *6: The collation ECM (smart key ECM ASSY) outputs the steering lock/unlock request for 10 seconds after the engine switch is ON (ACC) or ON (IG) or the engine start operation has been performed.
- *7: The collation ECM (smart key ECM ASSY) outputs the steering lock request for 10 seconds after the engine switch is OFF, or after the door is opened with the shift lever positioned in P*11.
- *8: This indicates that the ID code box (immobilizer code ECM)*9, or collation ECM (smart key ECM ASSY)*10 receives the confirmation information from the ECM. The display changes to [OK] if the ECM can send the information.
  - *9: With ID code box
  - *10: Without ID code box
  - *11: With automatic transmission

(a)Refer to the items in following [Data monitor] for the actual vehicle data.

TD

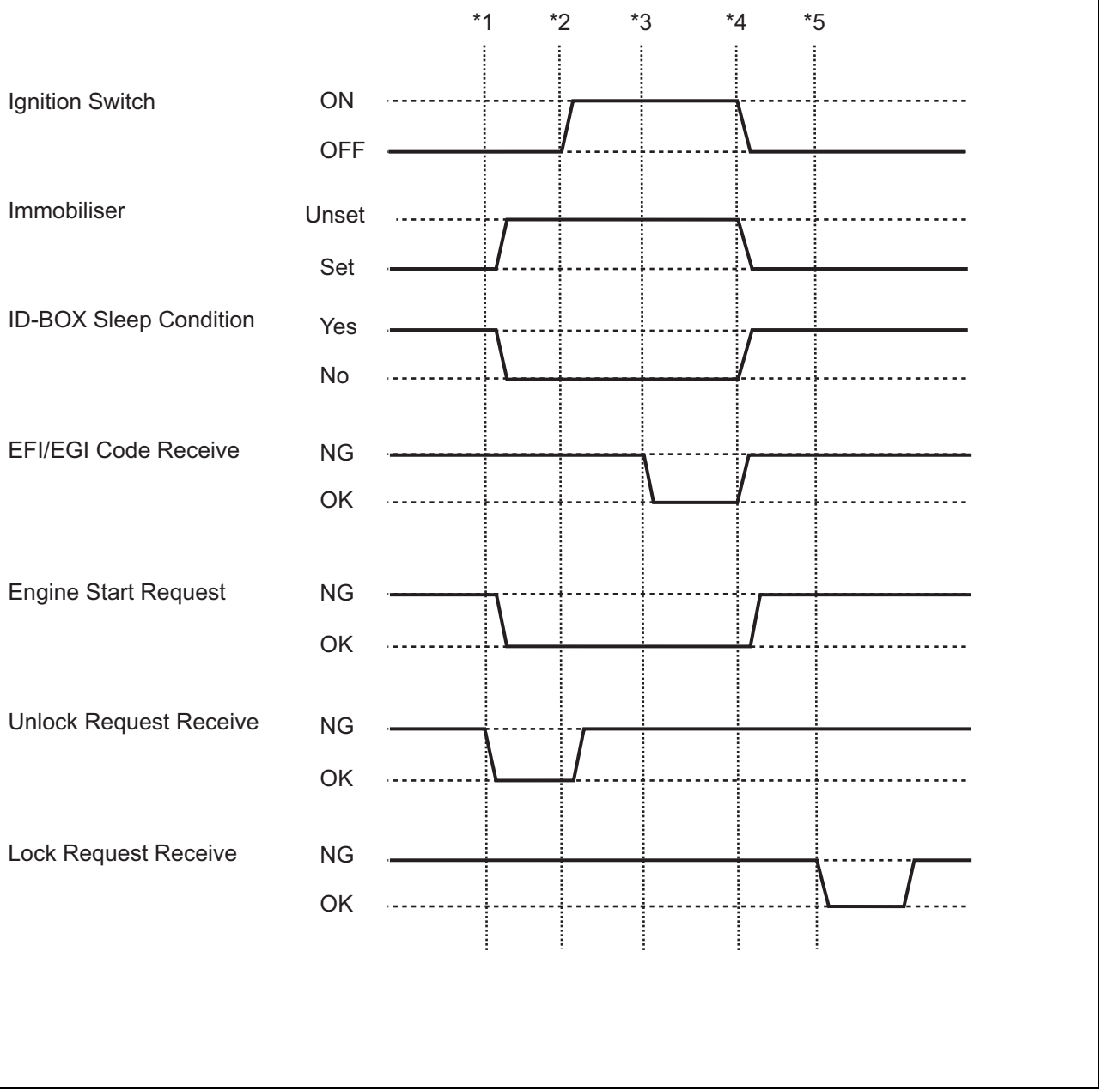

NOTE:
With the IG OFF and the shift lever in P*6, perform the following operation to confirm the power supply mode.
*1: Without depressing the brake pedal*6 or clutch pedal*7, push the engine switch to confirm the power supply mode is turned ON (ACC).
*2: Without depressing the brake pedal*6 or clutch pedal*7, push the engine switch to confirm the power supply mode is turned ON (IG).
*3: Depress the brake pedal*6 or clutch pedal*7 (stop light switch*6 or clutch start switch*7 is turned ON).
*4: Push the engine switch to confirm the power supply mode turns to ON.
*5: Open the door (the steering lock operation starts when the door opens).
*6: With automatic transmission
*7: With manual transmission

2. [Active Test]
NOTE:
By performing an [Active Test] with SSM4, you can operate relays, VSV, actuators and other devices without removing any parts. This type of non-intrusive function inspection is very useful because the intermittent operation is possible without inter-

ference with parts or wiring. By performing an [Active Test] at an initial phase of troubleshooting, you can save time for diagnosis. [Data monitor] information can be displayed during [Active Test].

(1) Connect the SSM4 to the DLC3.
(2) Turn IG SW to ON.
(3) Turn on the SSM4.
(4) Input the following menus: [Body Control] →[Active Test]
(5) Based on the SSM4 display contents, perform an [Active Test].

Main body

Item Name	Description/display range	Normal value	Remarks
[Security Indicator]	Security indicator light	ON/OFF	-

DIAGNOSTIC TROUBLE CODE CHART

ECM

Diagnostic codes	Diagnostic items	Diagnostic code output check operation	Reference pages
B1571	[Reference Code Incompatibility]	Engine switch on (IG)	TD - 255
B1572	[IMM Circuit Failure (Except Antenna Circuit)]	Engine switch on (IG)	TD - 256
B1576	[EGI Control Module EEPROM]	• Engine switch on (IG) • Register the ECU communication ID	TD - 261
B1577	[IMM Control Module EEPROM]	Engine switch on (IG)	TD - 262

Certification ECU

Diagnostic codes	Diagnostic items	Diagnostic code output check operation	Reference pages
B2784	[Abnormal antenna coil]	With the shift lever in P* the electrical key transmitter sub-assembly is held against the engine switch and an engine start operation is performed by pressing and holding the engine switch when the transmitter battery is depleted.	TD - 263
B278A	[Abnormal immobilizer power supply]	With the shift lever in P* the electrical key transmitter is held against the engine switch and an engine start operation is performed by pressing and holding the engine switch when the transmitter battery is depleted.	TD - 266
B278D	[ID code box recognition evaluation abnormal]	Always	TD - 268

DTC B1571 Mismatching identification code (immobilizer collation mismatched)

Circuit description

The ECM outputs this code if the reference code between the collation ECM (smart key ECM ASSY)*2 or the ID code box (immobilizer code ECM)*1 and the ECM does not match.

Diagnostic codes	Detecting conditions	Faulty part	Diagnostic code output check operation
B1571	The ECM reference code and the reference code sent from the collation ECM (smart key ECM ASSY)*2 or the ID code box (immobilizer code ECM)*1 do not match (1-trip detection logic*).	• ECM • Collation ECM (smart key ECM ASSY)*2 or ID code box (immobilizer code ECM)*1	IG ON

*: Output only when a failure is noted.
*1: There is an ID code box (immobilizer code ECM).
*2: There is no ID code box (immobilizer code ECM).

Vehicle status and failsafe upon failure detection

Vehicle status when a problem is detected	Failsafe function when a problem is detected
The engine does not start.	-

[Data monitor] / [Active Test]

Diagnostic codes	[Data monitor] / [Active Test]
B1571	-

Inspection steps

CAUTION:

- Refer to the entry & start system (entry function) before replacing the collation ECM (smart key ECM ASSY)*2 or ID code box (immobilizer code ECM)*1. (Refer to TD - 5)
- After repair, perform the [DTC output confirmation operation], and check that the DTC is not output again.

1	ECU communication ID registration

(1) Register the ECM communication ID. (Refer to the "Registration manual for immobilizer")
(2) Check if the engine can be started.
Criteria: The engine can start.

NG → Go to Step 2.

OK

Complete

2	Replacement of the ECM

(1) Replace the ECM with a new one temporarily.

Next

3	ECU communication ID registration

(1) Register the ECM communication ID. (Refer to the "Registration manual for immobilizer")
(2) Check if the engine can be started.
Criteria: The engine can start.

NG → Replacement of the collation ECM (smart key ECM ASSY)*2 or ID code box (immobilizer code ECM)*1

OK

END (faulty ECM)

DTC	B1572	IMM Circuit Failure (Except Antenna Circuit)

Circuit description

The ECM records this code when a communication failure is detected between the ID code box (immobilizer code ECM)*1, or collation ECM (smart key ECM ASSY)*2, and ECM.

*1: With ID code box

*2: Without ID code box

Diagnostic codes	Detecting conditions	Faulty part	Diagnostic code output check operation
B1572	When the communication failure is detected between the ID code box (immobilizer code ECM)*1, or collation ECM (smart key ECM ASSY)*2 and ECM (1 trip detection logic*3):	• ID code box (immobilizer code ECM)*1 • Collation ECM (smart key ECM ASSY)*2 • ECM • Harness or connector	IG ON

*1: With ID code box

*2: Without ID code box

*3: Output only when a failure is noted.

Vehicle status and failsafe upon failure detection

Vehicle status when a problem is detected	Failsafe function when a problem is detected
The engine does not start.	-

Related [Data monitor] and [Active Test]

Diagnostic codes	[Data monitor] / [Active Test]
B1572	Collation • [Immobilizer]

TD

Circuit figure

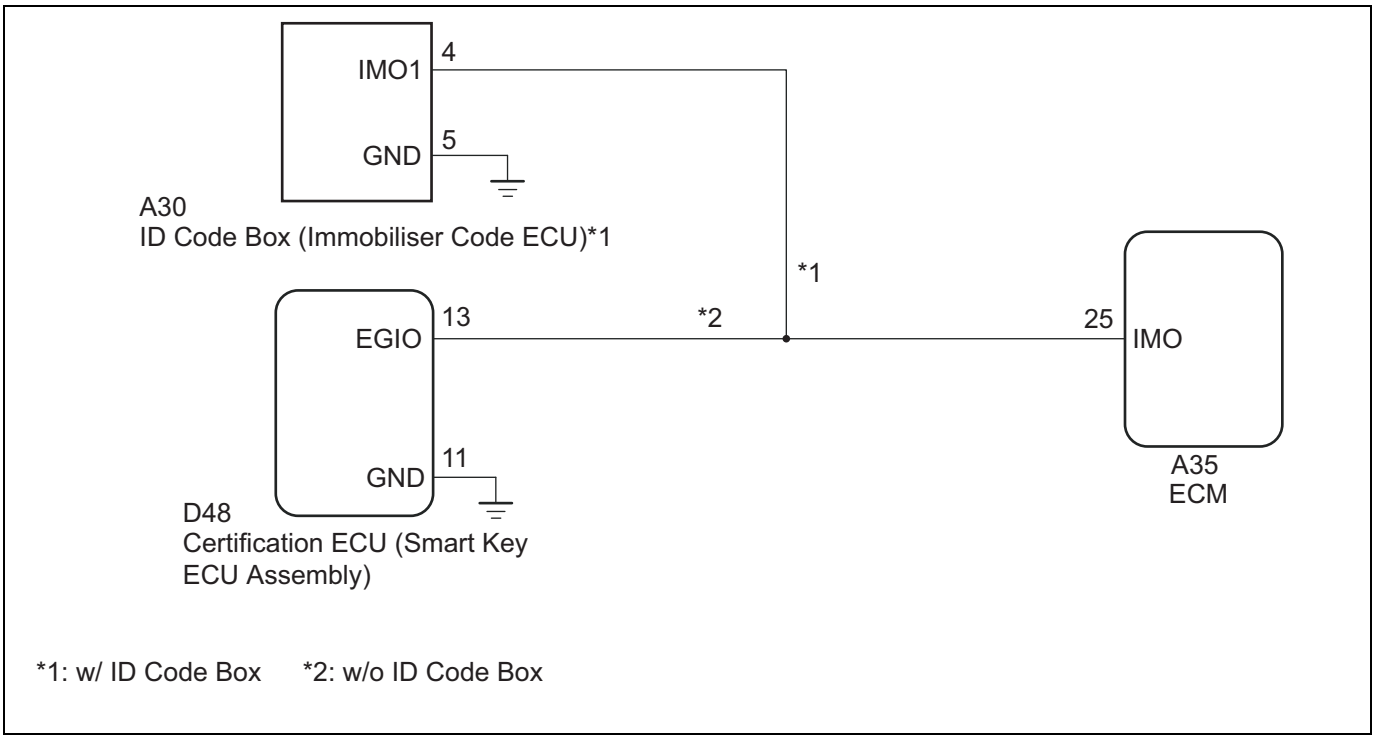

Inspection steps

CAUTION:

- Refer to the entry & start system (entry function) before replacing the collation ECM or ID code box (immobilizer code ECM)*. (Refer to TD - 5)
- After repair, perform the [DTC output confirmation operation], and check that the DTC is not output again.

*: The ID code box is included.

1	Reading of SSM4 data

(1) Use the SSM4 to perform the data monitor for the collation ECM (smart key ECM ASSY). (Refer to TD - 250)

(2) Turn to IG ON, and without opening or closing a door, check the following data.

[SSM4 screen: [Each System] →[Keyless Access(Collation ECM)] →[Data monitor]]

Item name	Description/display range	Normal value	Remarks
[Immobilizer]	This item indicates the engine immobilizer system status, as determined by the collation ECM (smart key ECM ASSY). Display range: Unset / Set	[Unset]: The engine immobilizer is unset (engine start permitted) (ACC ON or further) [Set]: The engine immobilizer is set (engine start prohibited) (IG OFF)	When [Set] is displayed for this item, you cannot start the engine. • The security indicator light blinks when [Set] is displayed for this item. • The security indicator light is interlocked with the [Set]/[Unset] status of the immobilizer, but not with the [Lock]/[Unlock] status of the steering wheel.
[Engine start]	This item indicates the engine start permission of the collation ECM (smart key ECM ASSY). Display range: [OK] / [NG]	[OK]: The collation ECM (smart key ECM ASSY) allows the engine to start. [NG]: The collation ECM (smart key ECM ASSY) prohibits the engine from starting.	-
[Unlock confirmation]	This item indicates the unlock confirmation status of the steering lock actuator ASSY (steering lock ECM). Display range: Set/Unset	[Set]: The unlock is set [UnSet]: The unlock is not set	When [Unset] is displayed, the steering cannot be unlocked and the engine cannot start.

Criteria: [Immobilizer] displays [Unset], [Engine start] displays [OK], and [Unlock confirmation] displays [Set].

NG → To "Smart entry & start system (start system) (engine will not start)" (Refer to TD - 204)

OK

2	Reading of SSM4 data

(1) Use the SSM4 to perform the data monitor for the collation ECM (smart key ECM ASSY). (Refer to TD - 250)

(2) While depressing the brake pedal for AT vehicles or the clutch pedal for MT vehicles, press and hold the push engine switch, then check the following data.

[SSM4 screen: [Each System] →[Keyless Access(Collation ECM)] →[Data monitor]]

Item name	Description/display range	Normal value	Remarks
[EFI/EGI code reception status]	The engine control computer receives engine start permission from the ID code box (immobilizer code ECM)*1 or the collation ECM (smart key ECM ASSY)*2, and returns collation information to the ID code box (immobilizer code ECM)*1 or the collation ECM (smart key ECM ASSY)*2. This item indicates that the ID code box (immobilizer code ECM)*1 or the collation ECM (smart key ECM ASSY)*2 cannot receive that information. Display range: NG/OK	[NG]: The ID code box (immobilizer code ECM)*1 or collation ECM (smart key ECM ASSY)*2 does not receive the signal for releasing the immobilizer from the engine control computer. [OK]: The ID code box (immobilizer code ECM)*1 or collation ECM (smart key ECM ASSY)*2 receives the signal for releasing the immobilizer from the engine control computer.	-

*1: With ID code box

*2: Without ID code box

Criteria: [OK] Is displayed if the EGI code is received.*

NOTE:

Even when [OK] is displayed, it changes to [NG] after about 10 seconds. When rechecking it, turn the ignition OFF before rechecking it.

NG → Repair or replacement of the harnesses between the ID code box (immobilizer ECM)*1 or the collation ECM (smart key ECM ASSY)*2 and the ECU

OK

3 Check the vehicle condition.

(1) Check the vehicle condition.

Result	Go to
With ID code box	A
Without ID code box	B

B → Go to Step 7.

A

4 Checking the harnesses and connectors

(1) Disconnect the connector A30 of the ID code box (immobilizer code ECM).

(2) Disconnect the A35 ECM connector.

(3) Measure the resistance according to the following table.

Resistance

Inspection terminals	Inspection conditions	Standard value
A30-4 (IMO1) - A35-25 (IMO1)	Always	1 Ωor less

Inspection terminals	Inspection conditions	Standard value
A30-4 (IMO1) - Chassis ground	Always	10 kΩ or more

NG → Repair or replace the harnesses or connectors.

OK

5 Replacement of the ECM

(1) Replace the ECM with a new one temporarily.

Next

6 ECU communication ID registration

(1) Register the ECM communication ID. (Refer to the "Registration manual for immobilizer")
(2) Check if the engine can be started.
Criteria: The engine can start.

NG → Replace the ID code box (immobilizer code ECM).

OK

END (faulty ECM)

7 Checking the harnesses and connectors

(1) Disconnect the D48 collation ECM (smart key ECM ASSY) connector.
(2) Disconnect the A35 ECM connector.
(3) Measure the resistance according to the following table.

Resistance

Inspection terminals	Inspection conditions	Standard value
D48-13 (EFIO) - A35-25 (IMO1)	Always	1 Ωor less
D48-13 (EFIO) - Chassis ground	Always	10 kΩ or more

NG → Repair or replace the harnesses or connectors.

OK

8 Replacement of the ECM

(1) Replace the ECM with new one temporarily.

Next

9	ECU communication ID registration

(1) Register the ECM communication ID. (Refer to the "Registration manual for immobilizer")
(2) Check if the engine can be started.
Criteria: The engine can start.

NG → Replacement of the collation ECM (smart key computer ASSY)

OK

END (faulty ECM)

DTC	B1576	EGI unit EEPROM

TD

Circuit description
The ECM outputs this code if the internal error is detected in the ECM or it can not access ROM inside the ECM during ECM communication ID registration.

Diagnostic codes	Detecting conditions	Faulty part	Diagnostic code output check operation
B1576	• Fault inside ECM (1 trip detection logic) • When it can not access ROM inside the ECM during ECM communication ID registration. (1 trip detection logic*).	ECM	• Engine switch is ON (IG) • Register the ECM communication ID.

*: Output only when a failure is noted.
Vehicle status and failsafe upon failure detection

Vehicle status when a problem is detected	Failsafe function when a problem is detected
• The engine does not start. • The ECM communication ID is not registered.	-

[Data monitor] / [Active Test]

Diagnostic codes	[Data monitor] / [Active Test]
B1576	-

Inspection steps
CAUTION:
After repair, perform the [DTC output confirmation operation], and check that the DTC is not output again.

1	ECU communication ID registration

(1) Register the ECM communication ID. (Refer to the REGISTRATION MANUAL FOR IMMOBILIZER)
(2) Check if the engine can be started.
Criteria: The engine can start.

NG → Go to Step 2.

OK

Complete

2	ECU communication ID registration

(1) Register the ECM communication ID. (Refer to the REGISTRATION MANUAL FOR IMMOBILIZER)
(2) Check if the engine can be started.
Criteria: The engine can start.

NG → Go to Step 3.

OK

Complete

3	ECU communication ID registration

(1) Register the ECM communication ID. (Refer to the REGISTRATION MANUAL FOR IMMOBILIZER)
(2) Check if the engine can be started.
Criteria: The engine can start.

NG → Replacement of the ECM

OK

Complete

DTC	B1577	Immobilizer unit EEPROM

Circuit description
The ECM outputs this code if the internal error is detected in the ECM or it can not access ROM inside the ECM during ECM communication ID registration.

Diagnostic codes	Detecting conditions	Faulty part	Diagnostic code output check operation
B1577	• Fault inside the collation ECM (smart key ECM ASSY)*2 or the ID code box*1 (1 trip detection logic) • Cannot access the ROM inside the collation ECM (smart key ECM ASSY)*2 of the ID code box*1 (1 trip detection logic)	Collation ECM (smart key ECM ASSY)*2 or ID code box*1	Engine start operation.

*: Output only when a failure is noted.
*1: With ID code box
*2: Without ID code box

Vehicle status and failsafe upon failure detection

Vehicle status when a problem is detected	Failsafe function when a problem is detected
The engine does not start.	Engine switch is ON (IG)

[Data monitor] / [Active Test]

Diagnostic codes	[Data monitor] / [Active Test]
B1577	-

Inspection steps

CAUTION:

- Refer to the entry & start system (entry function) before replacing the collation ECM (smart key ECM ASSY)*2 or ID code box*1. (Refer to TD - 5)
- After the repair work is complete, perform the "DTC output check operation" to confirm that the diagnostic code is not output again.

1	Clear the DTC.

(1) Clear the DTC. (Refer to TD - 250)

Next

2	DTC check

(1) Turn to IG OFF, and disconnect the battery ground terminal
(2) Connect the battery ground terminal.
(3) If there is an ID code box, register the ID code box. If there is no ID code box, turn the ignition switch ON and wait 5 seconds or more.
(4) Check the DTC. (Refer to TD - 250)
Criteria: DTC B1577 is not output.

NG → Replacement of the collation ECM (smart key ECM ASSY)*2 or ID code box*1

OK

Complete

DTC	B2784	Faulty antenna coil

Circuit description

When the open or short circuit is detected in the transponder key amplifier coil built in the engine switch, the collation ECM (smart key ECM ASSY) outputs this DTC. This DTC is also output as the past DTC.

Diagnostic codes	Detecting conditions	Faulty part	Diagnostic code output check operation
B2784	Open or short circuit in the transponder key amplifier coil built in the engine switch (judged by communication to the collation ECM (smart key ECM ASSY)) (1 trip detection logic*1) • Open circuit in AGND, VC5, TXCT, or CODE (including disconnected engine switch) • Open circuit in the transponder key amplifier coil built in the engine switch.	• Engine switch • Harness or connector • Collation ECM (smart key ECM ASSY)	When the transmitter battery is run-out, with the shift lever in P* 2 and hold the electrical key transmitter SUB-ASSY above the engine switch, and push the engine switch to perform the engine start operation.

*1: Output only when a failure is noted.

*2: With automatic transmission

Vehicle status and failsafe upon failure detection

Vehicle status when a problem is detected	Failsafe function when a problem is detected
When the transmitter battery is run-out, with the shift lever in P* and the electrical key transmitter SUB-ASSY is held above the engine switch, the engine can not start even though the engine switch is pushed.	-

*: for automatic transmission

[Data monitor] / [Active Test]

Diagnostic codes	[Data monitor] / [Active Test]
B2784	-

Circuit figure

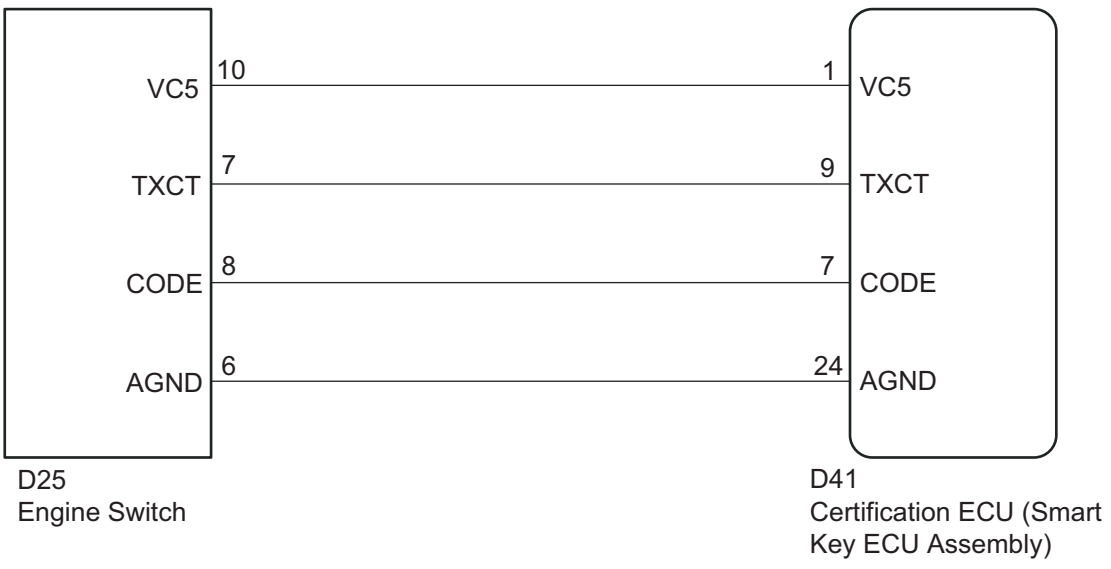

Inspection steps

CAUTION:

- Before replacing the collation ECM (smart key ECM ASSY), refer to "entry & start system (entry function)". (Refer to TD - 5)

• After repair, perform the [DTC output confirmation operation], and check that the DTC is not output again.

1	Checking the harnesses and connectors (collation ECM (smart key ECM ASSY) - engine switch)

(1) Disconnect the connector D41 of the collation ECM (smart key ECM ASSY).
(2) Disconnect the D25 engine switch connector.
(3) Measure the resistance according to the following table.

Resistance

Inspection terminals	Inspection conditions	Standard value
D41-1 (VC5) - D25-10 (VC5)	Always	1 Ωor less
D41-7 (CODE) - D25-8 (CODE)	Always	1 Ωor less
D41-9 (TXCT) - D25-7 (TXCT)	Always	1 Ωor less
D41-24 (AGND) - D25-6 (AGND)	Always	1 Ωor less
D41-1 (VC5) - Chassis ground	Always	10 kΩ or more
D41-7 (CODE) - Chassis ground	Always	10 kΩ or more
D41-9 (TXCT) - Chassis ground	Always	10 kΩ or more
D41-24 (AGND) - chassis ground	Always	10 kΩ or more

NG → Repair or replace the harnesses or connectors.

OK

2	Replace engine switch.

(1) Temporarily replace the engine switch with new one or one that is functioning properly. (Refer to ST - 43)

Next

3	Clear the DTC.

(1) Clear the DTC. (Refer to TD - 250)

Next

4	DTC check

(1) Check for DTC. (Refer to TD - 250)
Criteria: DTC B2784 is not output.

NG → Replacement of the collation ECM (smart key computer ASSY)

OK

END (faulty engine switch)

DTC	B278A	Faulty immobilizer power

Circuit description

When the short circuit is detected in the GND of the transponder key amplifier power supply in the engine switch, the collation ECM (smart key ECM ASSY) outputs this DTC.

Diagnostic codes	Detecting conditions	Faulty part	Diagnostic code output check operation
B278A	The short circuit in the GND of the transponder key amplifier power supply in the engine switch (VC5-VC5) (1 trip detection logic*1).	• Harness or connector • Engine switch • Collation ECM (smart key ECM ASSY)	When the transmitter battery is run-out, with the shift lever in P* 2 and hold the electrical key transmitter SUB-ASSY above the engine switch, and push the engine switch to perform the engine start operation.

TD

*1: Output only when a failure is noted.

*2: With automatic transmission

Vehicle status and failsafe upon detection

Vehicle status when a problem is detected	Failsafe function when a problem is detected
When the transmitter battery is run-out, with the shift lever in P* and the electrical key transmitter SUB-ASSY is held above the engine switch, the engine can not start even though the engine switch is pushed.	-

*: for automatic transmission

Related [Data monitor] and [Active Test]

Diagnostic codes	[Data monitor] / [Active Test]
B278A	-

Circuit figure

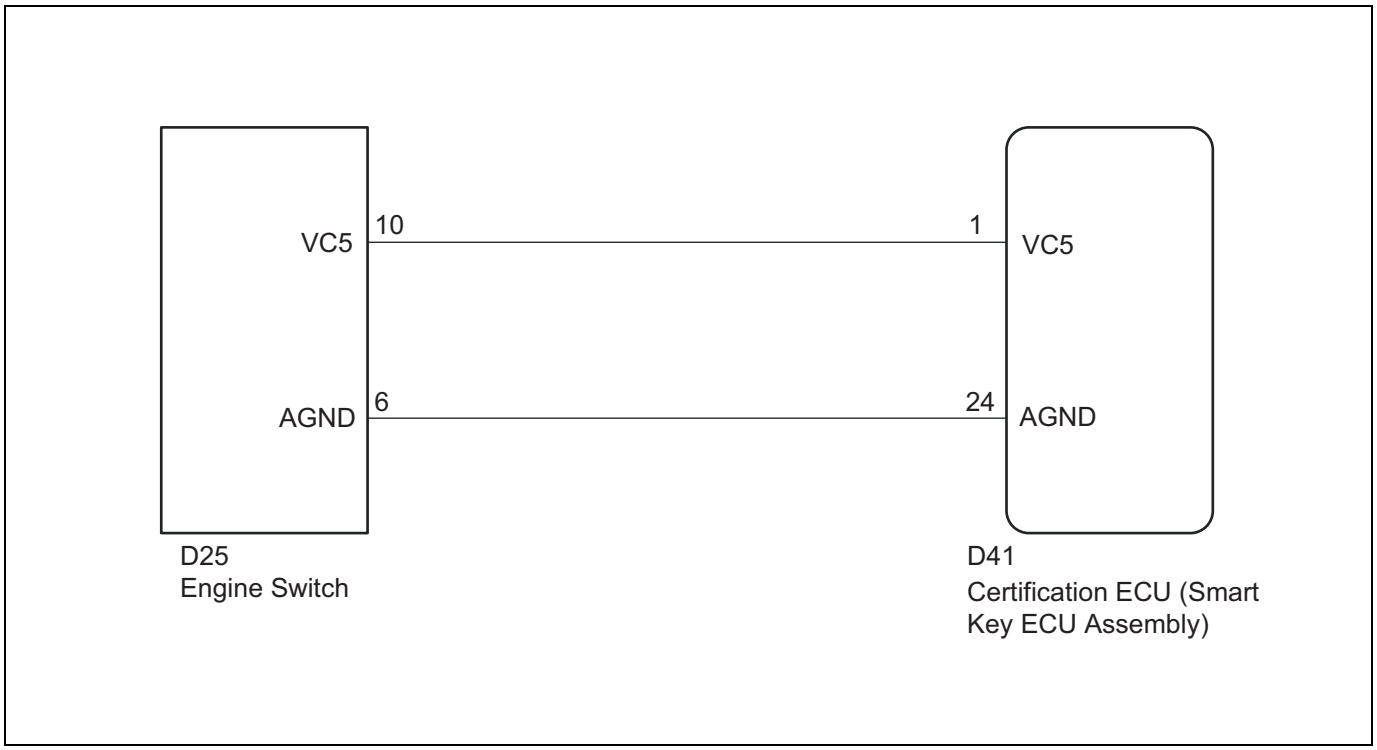

Inspection steps

CAUTION:

- Before replacing the collation ECM (smart key ECM ASSY), refer to "entry & start system (entry function)". (Refer to TD - 5)
- After repair, perform the [DTC output confirmation operation], and check that the DTC is not output again.

1	Checking the harnesses and connectors (collation ECM (smart key ECM ASSY) - engine switch)

(1) Disconnect the D41 collation ECM (smart key ECM ASSY) connector.
(2) Disconnect the D25 engine switch connector.
(3) Measure the resistance according to the following table.

Resistance

Inspection terminals	Inspection conditions	Standard value
D41-1 (VC5) - D25-10 (VC5)	Always	1 Ωor less
D41-24 (AGND) - D25-6 (AGND)	Always	1 Ωor less
D41-1 (VC5) - Chassis ground	Always	10 kΩ or more
D41-24 (AGND) - chassis ground	Always	10 kΩ or more

NG → Repair or replace the harnesses or connectors.

OK

2	Check the collation ECM (smart key ECM ASSY).

(1) Reconnect the D41 connector of the collation ECM (smart key ECM ASSY).
(2) Reconnect the D25 engine switch connector.

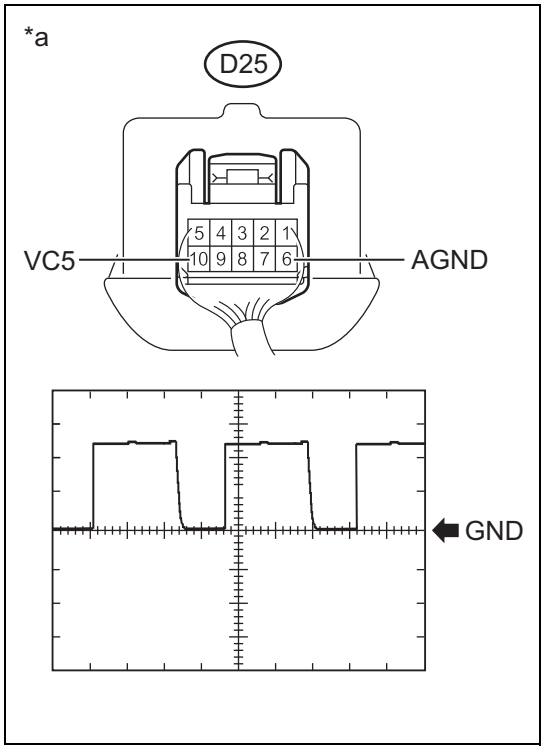

(3) Using an oscilloscope, check the waveform.
NOTE:
Perform this check on the engine switch side.

Measuring conditions

Item	Contents
Tester connection	D25-10 (VC5) - D25-6 (AGND)
Tool setting	2V/DIV., 200ms./DIV.
Conditions	IG is turned OFF, the key is brought outside the vehicle, and within 30 seconds after the engine switch is pushed.

Criteria: The waveform is output normally (Refer to the figure).

Captions in illustration

*a	Connector connected (Engine switch)

NG → Replacement of the collation ECM (smart key computer ASSY)

OK → Replace engine switch.

TD

DTC B278D ID code box recognition error

Circuit description

When the collation ECM (smart key ECM ASSY) detects the input signal that indicates that the ID code box is installed on the vehicle even when ID code box is not registered, the collation ECM (smart key ECM ASSY) outputs this DTC.

Diagnostic codes	Detecting conditions	Faulty part	Diagnostic code output check operation
B278D	Even without installation of the wire harness that judges whether the ID code box is installed on the vehicle or not, the collation ECM (smart key ECM ASSY) receives the LIN signal from the ID code box.	There are not the communication failure without ID code box.	Always

*: Output only when a failure is noted.

Vehicle status and failsafe upon failure detection

Vehicle status when a problem is detected	Failsafe function when a problem is detected
Key registration is prohibited.	-

[Data monitor] / [Active Test]

Diagnostic codes	[Data monitor] / [Active Test]
B278D	-

Inspection steps

CAUTION:

- Before performing the following check procedures, check that the ID code box (immobilizer code ECM) is not installed on the vehicle.

- Refer to the REGISTRATION MANUAL FOR IMMOBILIZER before replacing the collation ECM (smart key ECM ASSY).
- After repair, perform the [DTC output confirmation operation], and check that the DTC is not output again.

1	Clear the DTC.

(1) Clear the DTC. (Refer to TD - 250)

Next

2	DTC check

(1) Check the DTC. (Refer to TD - 250)
NOTE:
Before checking DTC, perform [Diagnostic code output check operation].
Criteria: B278D is not output

NG → Replacement of the collation ECM (smart key ECM ASSY)

OK

Complete

Security indicator does not blink

Circuit description

When the immobilizer function is set (power OFF), the smart key ECM ASSY (collation ECM) sends the security indicator light drive signal to the main body ECM (network gateway computer) via CAN communication, and the main body ECM (network gateway computer) makes the security indicator light in the combination meter ASSY blink.

Circuit figure

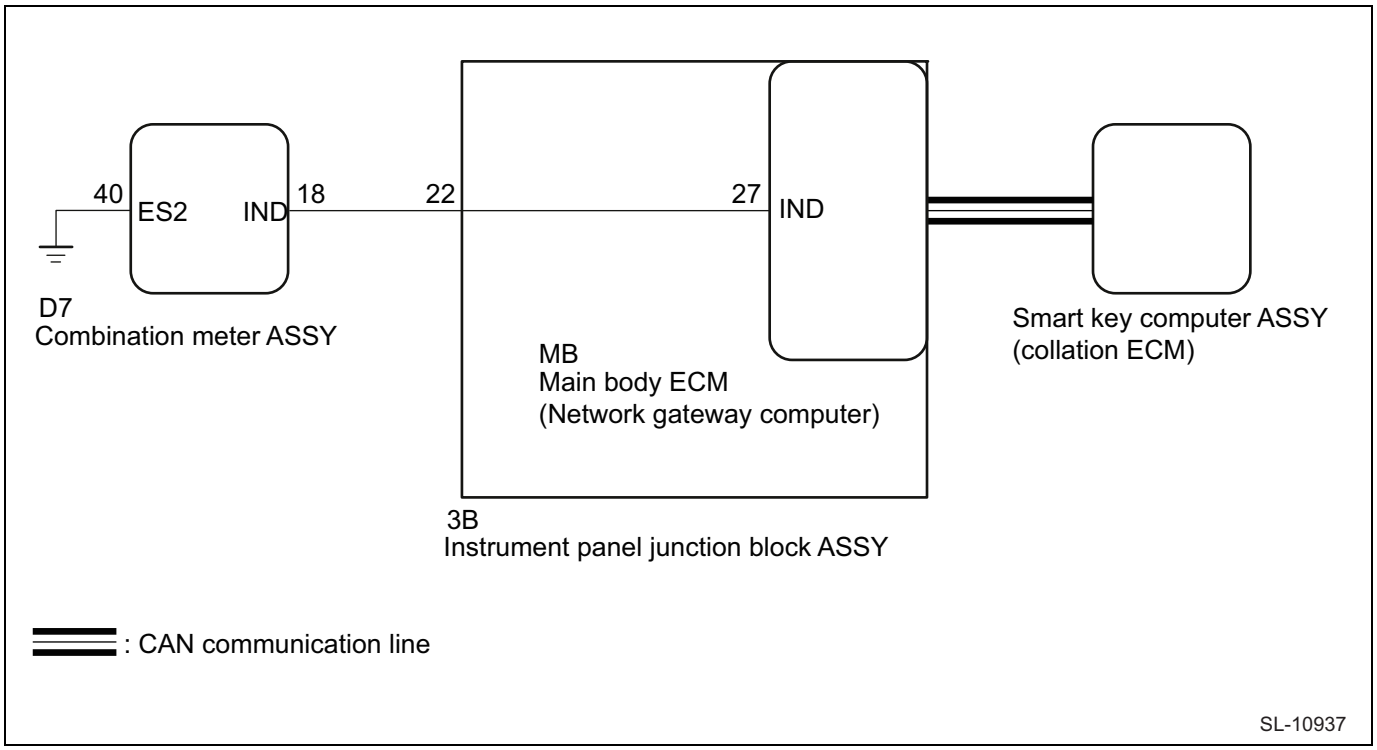

Inspection steps

CAUTION:

- When replacing the smart key ECM ASSY (collation ECM), check the precautions (refer to TD - 233), and refer to the "Registration manual for immobilizer".
- Check the fuses before performing the diagnosis.

1	DTC check

(1) Check DTC using SSM4. (Refer to TD - 250)

Criteria: Diagnostic code is not output.

NG → Go to "List of diagnostic codes" (Refer to TD - 255)

OK

2	Implementation of the SSM4 active test (security indicator)

(1) Use the SSM4 to perform the active test, and check that the security indicator light lights up. (Refer to TD - 250)

[SSM4 screen: [Each System] →[Body Control] →[Active Test]]

Item	Drive	Remarks
[Security Indicator]	Output/stop	When carrying the electrical key transmitter SUB-ASSY and in IG ON

Criteria: The security indicator light lights up / turns off.

NG → Go to Step 3.

OK

Replacement of the main body ECM (Network gateway computer)

3	Reading of SSM4 data (immobilizer evaluation)

(1) Turn the ignition switch to OFF.

(2) Using the SSM4, follow the screen display and read the data monitor. (Refer to TD - 250)

[SSM4 screen: [Each System] →[Keyless Access(Collation ECM)] →[Data monitor]]

Item name	Description/display range	Normal value	Remarks
[Immobilizer]	This item indicates the engine immobilizer system status, as determined by the collation ECM (smart key ECM ASSY). Display range: Unset / Set	[Unset]: The engine immobilizer is unset (engine start permitted) (ACC ON or further) [Set]: The engine immobilizer is set (engine start prohibited) (IG OFF)	When [Set] is displayed for this item, you cannot start the engine. • The security indicator light blinks when [Set] is displayed for this item. • The security indicator light is interlocked with the [Set]/[Unset] status of the immobilizer, but not with the [Lock]/[Unlock] status of the steering wheel.

Criteria: [Set] is displayed.

NG → Replacement of the smart key ECM ASSY (collation ECM)

OK

4	Inspection of the wiring harnesses and the connectors (instrument panel junction block ASSY - combination meter ASSY)

(1) Disconnect the connector 3B of the instrument panel junction block ASSY.
(2) Disconnect connector D7 of the combination meter ASSY.
(3) Measure the resistance and voltage between terminals.

Resistance

Inspection terminals	Inspection conditions	Standard value
3B-22 - D7-18 (ILL+)	Always	Less than 1 Ω
3B-18 - chassis ground	Always	Less than 1 Ω
3B-22 or D7-18 (ILL+) - chassis ground	Always	10 kΩ or more

Voltage

Inspection terminals	Inspection conditions	Standard value
D7 - 1	Always	10 V or more

NG → Repair or replacement of wiring harness or connector

OK

5	Unit inspection of the instrument panel junction block ASSY.

(1) Remove the instrument panel junction block ASSY.
(2) Remove the main body ECM (network gateway computer) from the instrument panel junction block ASSY.
(3) Measure the resistance between the terminals.

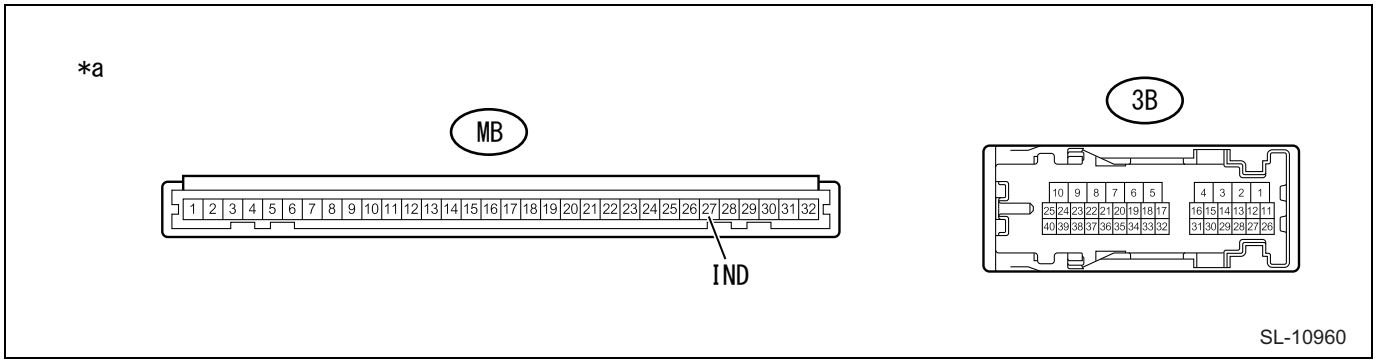

Resistance

Inspection terminals	Inspection conditions	Standard value
MB-27 (IND) - 3B-22	Always	Less than 1 Ω
MB-11 (GND) - 3B-18	Always	Less than 1 Ω

Captions in illustration

*a	Connector not connected (Instrument panel junction block ASSY)	-	-

NG → Replacement of the instrument panel junction block ASSY

OK

6	Replacement of combination meter ASSY

(1) Replace with a new or normal combination meter ASSY.
(2) When the immobilizer is set, check that the security indicator light flashes.
Criteria: The security indicator light flashes

NG → Replacement of the main body ECM (network gateway computer) (Refer to PD - 23)

OK

Complete (Faulty combination meter ASSY)

Engine immobilizer system (without entry & start system)

Parts location

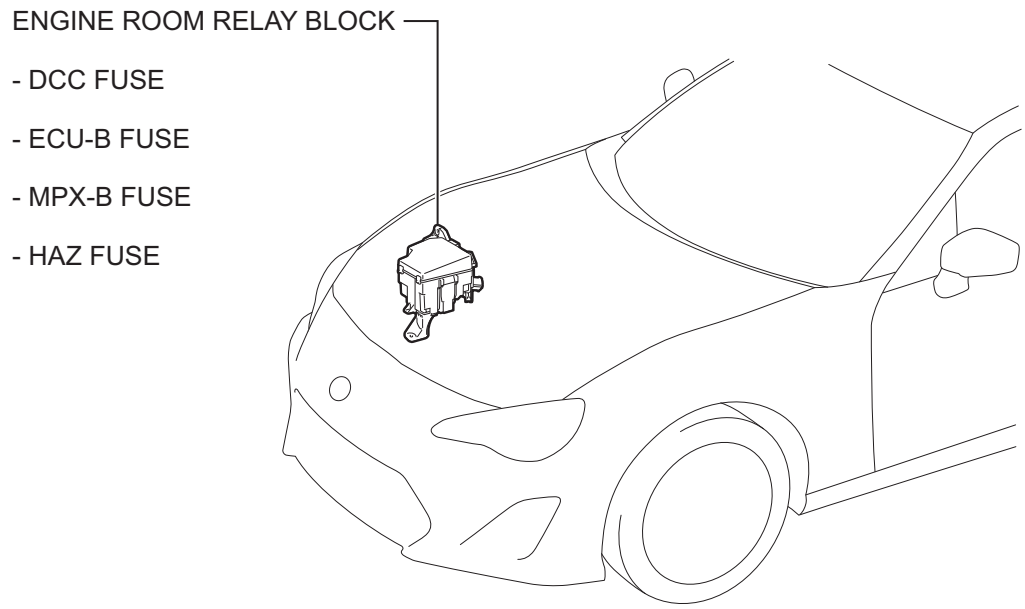

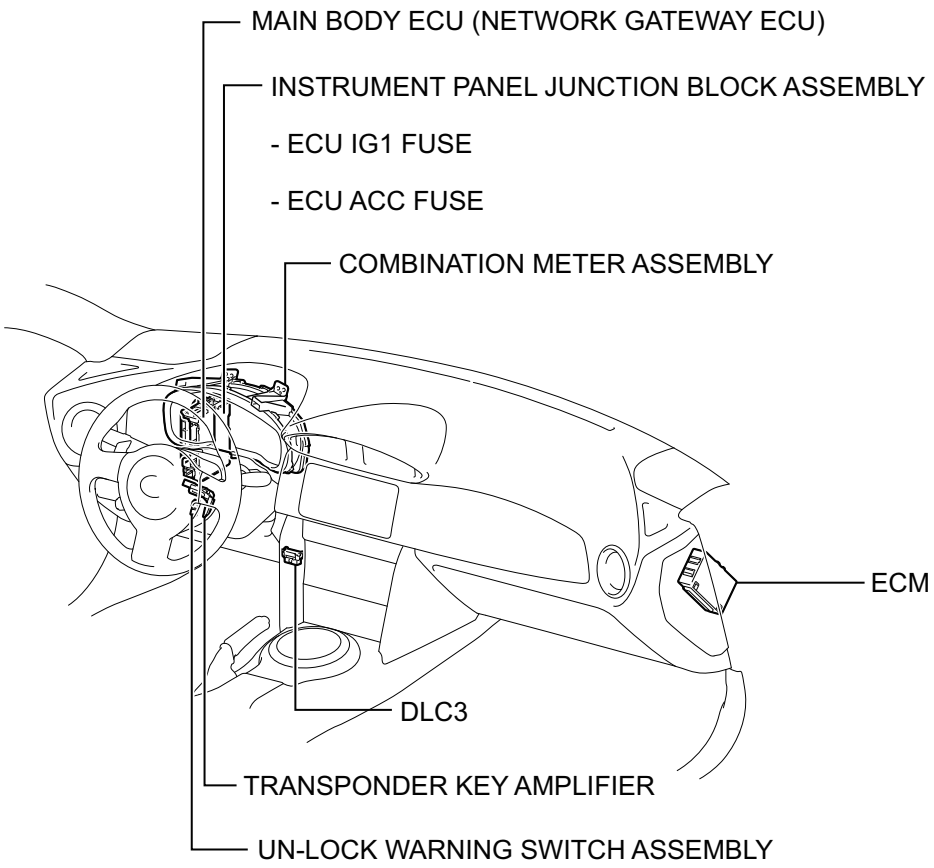

TRANSPONDER KEY ECU ASSEMBLY*

REFER TO THE “REGISTRATION MANUAL FOR IMMOBILIZER” FOR ATTACHMENT POSITION.

*: w/ Transponder Key ECU Assembly

SL-02148

Circuit figure

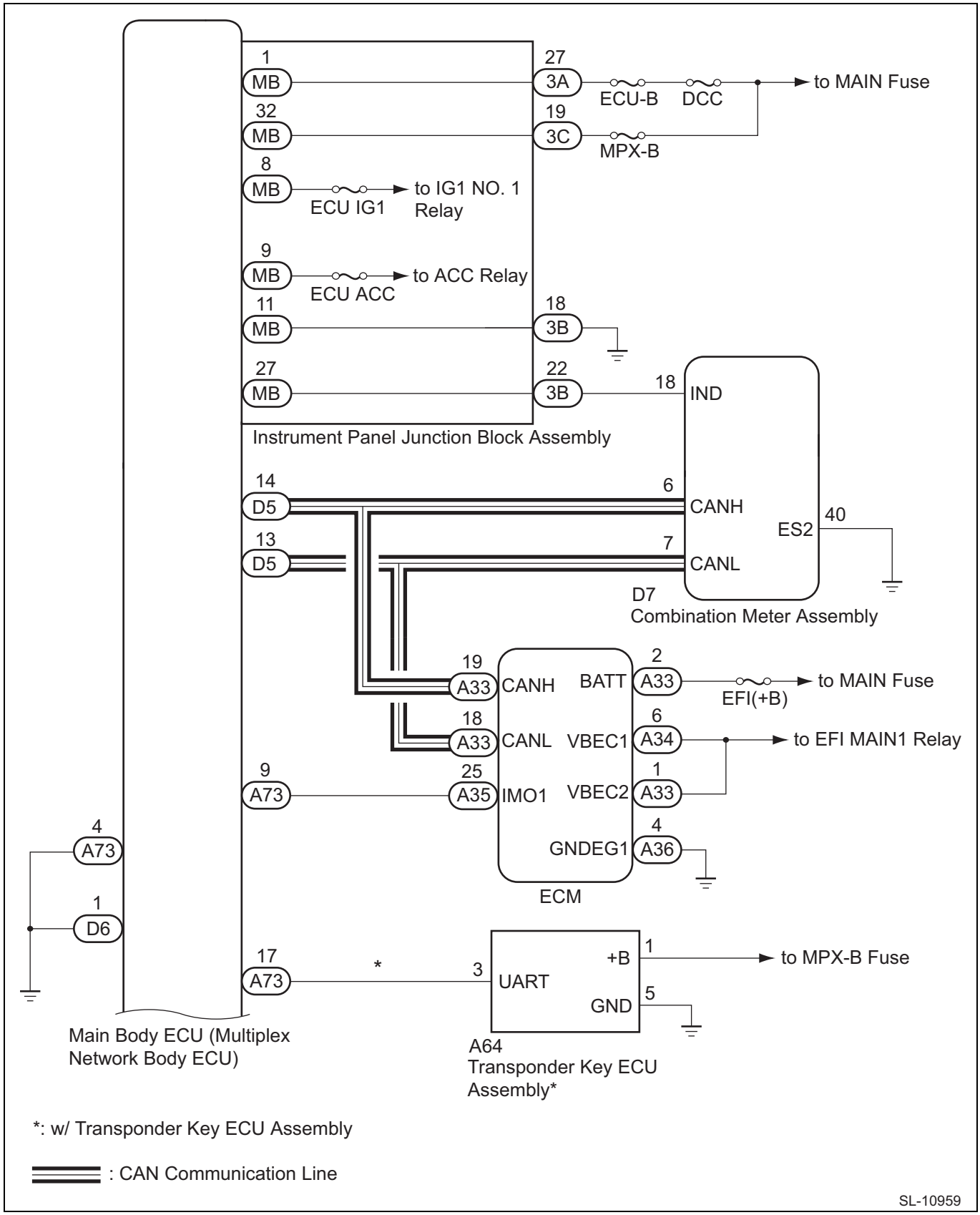

TD

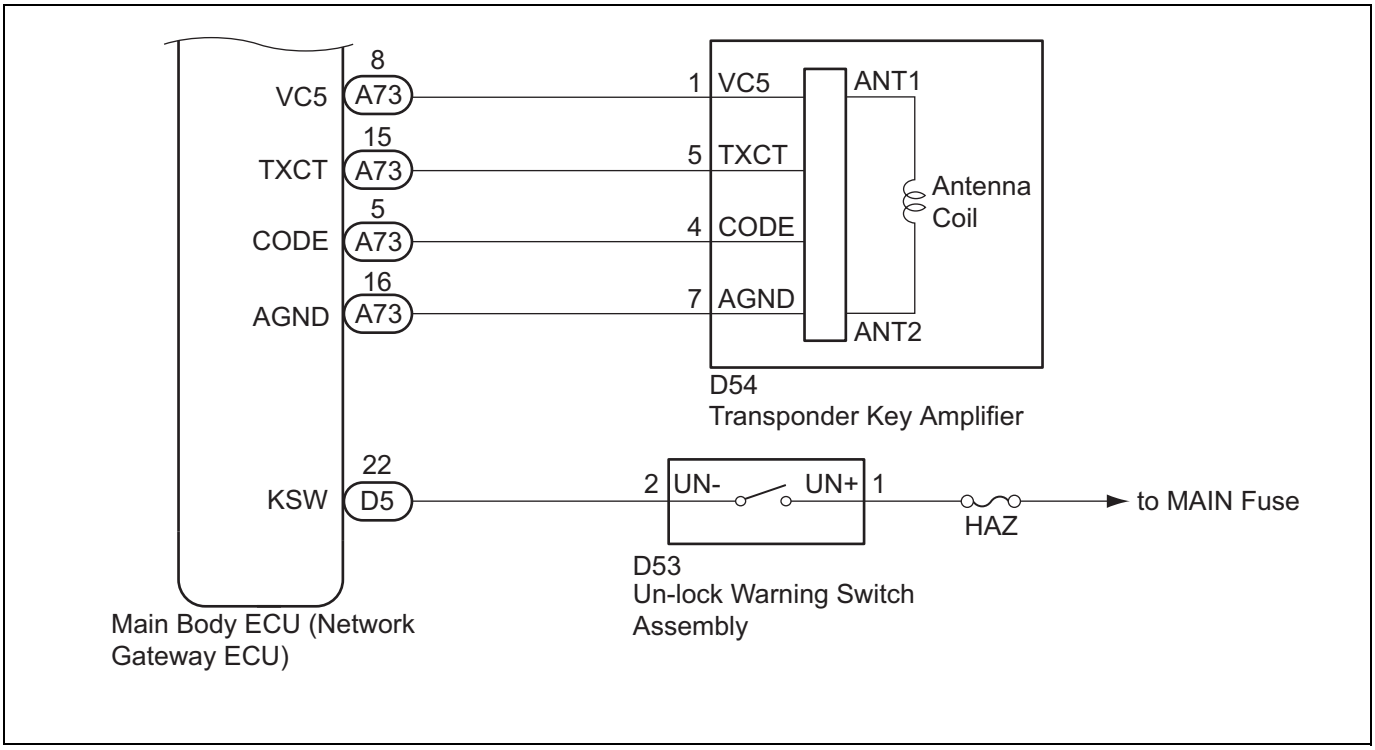

TD

Description of functions

1. Description of the engine immobilizer system
   (1) The engine immobilizer system records the key ID in the main body ECM (multiplex network body computer). If the key ID and the code recorded in the main body ECM do not match, the engine immobilizer system prohibits the engine from starting.
2. Functions of the main parts

Components	Summary
Main body ECM (Network gateway computer)	This checks if the key ID received from the transponder key amplifier matches the registered key ID. Concurrently, it communicates with the combination meter ASSY*1 or the transponder ECM*2 and checks that the key ID (meter ID) recorded in the combination meter ASSY*1 or transponder ECM*2 matches the ID (meter ID) recorded in the main body ECM. Based on the request from the engine control computer, it encrypts each collation result and registered ID (engine ID), and sends them to the engine control computer.
Combination meter ASSY*1	Based on the request from the main body ECM (network gateway computer), it encrypts the registered ID, and sends it to the main body ECM (network gateway computer).
Transponder key ECM ASSY*2	Based on the request from the main body ECM (network gateway computer), it encrypts the registered ID, and sends it to the main body ECM (network gateway computer).
Transponder key amplifier	This receives the key ID from the antenna coil, and outputs the key ID, which was amplified by the amplifier, to the main body ECM (network gateway computer).
Engine control computer	When the engine starts, this communicates with the main body ECM (network gateway computer), and receives the key ID, the meter ID collation result, and the encrypted ID (engine ID) of the main body ECM (network gateway computer). If any of them do not match, it stops (prohibits) the engine from starting.
Unlock warning switch ASSY	This detects a key inserted in the key cylinder and outputs the result to the main body ECM (network gateway computer).

*1: With a transponder ECM
*2: Without a transponder ECM

3. System functions
   (1) When the main body ECM (network gateway computer) detects that the unlock warning switch ASSY is ON, it powers the transponder key amplifier and generates a magnetic field around the antenna coil. The transponder chip inside the key grip outputs a key ID signal by the electromotive force generated by the magnetic field. The transponder key amplifier receives the key ID code signal, amplifies it by an amplifier, and sends it to the main body ECM (network gateway computer).
   The main body ECM (network gateway computer) checks if the key ID received from the transponder key amplifier matches the registered key ID. Concurrently, the main body ECM (network gateway computer) communicates with the

combination meter ASSY*1 or the transponder ECM*2 and checks that the ID (meter ID) recorded in the combination meter ASSY*1 or transponder ECM*2 matches the ID (meter ID) recorded in the main body ECM (network gateway computer).
When starting the engine, the engine control computer communicates with the main body ECM (network gateway computer), and checks the collation result between the key and the combination meter ASSY*1 or the transponder ECM*2. Also, it checks if the ID (engine ID) recorded in the main body ECM (network gateway computer) matches, and if any does not match, it stops the engine from starting.
*1: With a transponder ECM
*2: Without a transponder ECM

HOW TO PROCEED WITH TROUBLESHOOTING

NOTE:
- Use these procedures to troubleshoot the engine immobiliser system.
- *: Use the SSM4.

1	VEHICLE BROUGHT TO WORKSHOP

NEXT

2	INSPECT BATTERY VOLTAGE

Standard voltage: 11 to 14V
If the voltage is below 11V, recharge or replace the battery before proceeding.
NOTE:
A simple method to determine whether the battery is depleted is to operate the horn.

NEXT

3	CAN communication system check

(1) Check CAN communication system. (Refer to NW - 30)
Result

Result	Proceed to
Functioning properly	A
Not functioning properly	B

B → GO TO CAN COMMUNICATION SYSTEM (Refer to NW - 30)

A

4	CHECK FOR DTC*

(1) Check for DTCs and note any codes that are output. (See page TD - 282)
Result

Result	Proceed to
DTC is not output	A
Engine related DTC is output	B

Result	Proceed to
Engine immobiliser system DTC is output	C

(2) Based on the DTCs output above, proceed to each diagnostic procedure.

B	To engine control system
C	PROCEED TO DTC CHART (See page TD - 284)

A

5	PROBLEM SYMPTOMS TABLE

(1) Refer to Problem Symptoms Table. (See page TD - 279)

Result

Result	Proceed to
Fault is not listed in problem symptoms table	A
Fault is listed in problem symptoms table	B

B	Go to step 7

A

6	OVERALL ANALYSIS AND TROUBLESHOOTING*

(1) Data monitor / active test (Refer to TD - 283)
(2) ECM terminal arrangement. (See page TD - 279)

NEXT

7	ADJUST, REPAIR OR REPLACE

NEXT

8	CHECK FOR DTC*

(1) Clear the DTCs. (See page TD - 282)
(2) Check for DTCs. (See page TD - 282)
NOTE:
Before checking for DTCs, perform the "DTC Output Confirmation Operation" of each diagnostic procedure. (See page TD - 284)

Result

Result	Proceed to
DTC is not output	A
Engine immobiliser system DTC is output	B

B	GO TO DIAGNOSTIC TROUBLE CODE CHART (See page TD - 284)

A

END

PROBLEM SYMPTOMS TABLE

NOTE:

- Use the table below to help determine the cause of problem symptoms. If multiple suspected areas are listed, the potential causes of the symptoms are listed in order of probability in the "Suspected Area" column of the table. Check each symptom by checking the suspected areas in the order they are listed. Replace parts as necessary.
- Inspect the fuses and relays related to this system before inspecting the suspected areas below.

Engine Immobiliser System

Symptom	Suspected Area	See page
Security indicator light does not blink	Proceed to "Security Indicator Light does not Blink"	TD - 310

ECM terminal arrangement

1. Check the transponder key amplifier.

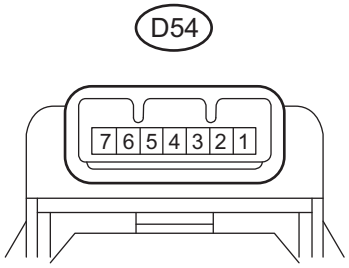

(1) Disconnect the D54 transponder key amplifier connector.

(2) Refer to the table below and measure the resistance and the voltage and check for a pulse.

Terminal No. (symbol)	Input/output	Wiring color	Terminal description	Conditions	Specified condition
D54-7 (AGND) - Chassis ground	-	GR - Chassis ground	Ground	Always	1 Ωor less

(3) Reconnect the D54 transponder key amplifier connector.

(4) Refer to the table below and measure the voltage and check for a pulse.

Terminal No. (symbol)	Input/output	Terminal description	Conditions	Specified condition
D54-1 (VC5) - D54-7 (AGND)	Input	Transponder key amplifier power supply	Key is not inserted to the ignition key cylinder.	1 V or less
			Key is inserted to the ignition key cylinder.	4.5 to 5.5V
D54-4 (CODE) - D54-7 (AGND)	Output	Key code data revision signal	Key is not inserted to the ignition key cylinder.	1 V or less
			Key is inserted to the ignition key cylinder.	Pulse generation
D54-5 (TXCT) - D54-7 (AGND)	Output	Key code output signal	Key is not inserted to the ignition key cylinder.	1 V or less
			Key is inserted to the ignition key cylinder.	Pulse generation

2. Check the main body ECM (multiplex network body ECM).

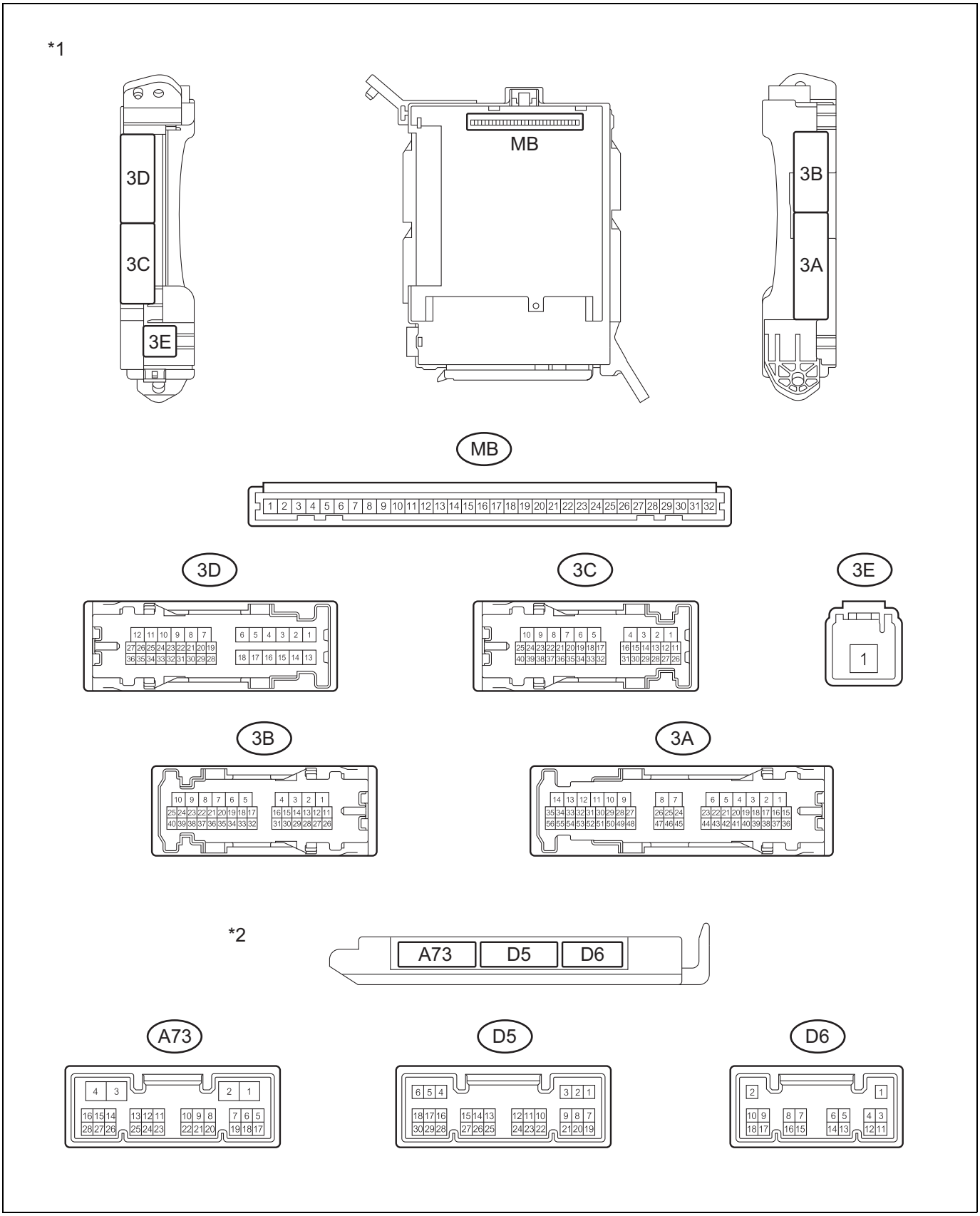

Captions in illustration

*1	Instrument panel junction block ASSY	*2	Main body ECM (multiplex network body ECM)

(1) Remove the main body ECM (multiplex network body ECM) from the instrument panel junction block ASSY.
(2) Disconnect the connectors D5, D6, and A73 of the main body ECM (multiplex network body ECM).

(3) Measure the resistance and voltage based on the following table.

Terminal No. (symbol)	Input/output	Terminal description	Conditions	Specified condition
MB-1 - chassis ground	Input	Battery power supply	Always	11 to 14 V
MB-8 - chassis ground	Input	IG SW power supply	IG SW ON	11 to 14 V
			IG SW Off	1 V or less
MB-9 - chassis ground	Input	ACC power supply	IG SW ACC	11 to 14 V
			IG SW Off	1 V or less
MB-11 - chassis ground	-	Ground	Always	1 Ωor less
MB-32 - chassis ground	Input	Battery power supply	Always	11 to 14 V
D5-22 - chassis ground	Input	Unlock warning switch input	Key is not inserted to the ignition key cylinder (OFF).	1 V or less
			Key is inserted to the ignition key cylinder (ON).	11 to 14 V
D6-1 - Chassis ground	-	Ground	Always	1 Ωor less
A73-4 - chassis ground	-	Ground	Always	1 Ωor less

(4) Reconnect the connector D5, D6, and A73 of the main body ECM (multiplex network body ECM).

(5) Install the main body ECM (multiplex network body ECM) to the instrument panel junction block ASSY.

(6) Refer to the table below and measure the resistance and the voltage and check for a pulse.

Terminal No. (symbol)	Input/output	Terminal description	Conditions	Specified condition
A73-5 - chassis ground	Output	Key code data revision signal	Key is not inserted to the ignition key cylinder.	1 V or less
			Key is inserted to the ignition key cylinder.	Pulse generation
A73-9 - chassis ground	Input/output	EFI communication	IG SW Off	1 V or less
			IG SW ON	Pulse generation
A73-8 - chassis ground	Output	Transponder key amplifier power supply	Key is not inserted to the ignition key cylinder.	1 V or less
			Key is inserted to the ignition key cylinder.	4.5 to 5.5V
A73-15 - chassis ground	Input	Key code output signal	Key is not inserted to the ignition key cylinder.	1 V or less
			Key is inserted to the ignition key cylinder.	Pulse generation
A73-16 - chassis ground	-	Transponder key amplifier GND-output short	Always	1 Ωor less
A73-17 - chassis ground	Input/output	Transponder key ECM communication	IG SW Off	1 V or less
			IG SW ON	Pulse generation

*: with transponder key ECM ASSY

3. Check the transponder key ECM ASSY.

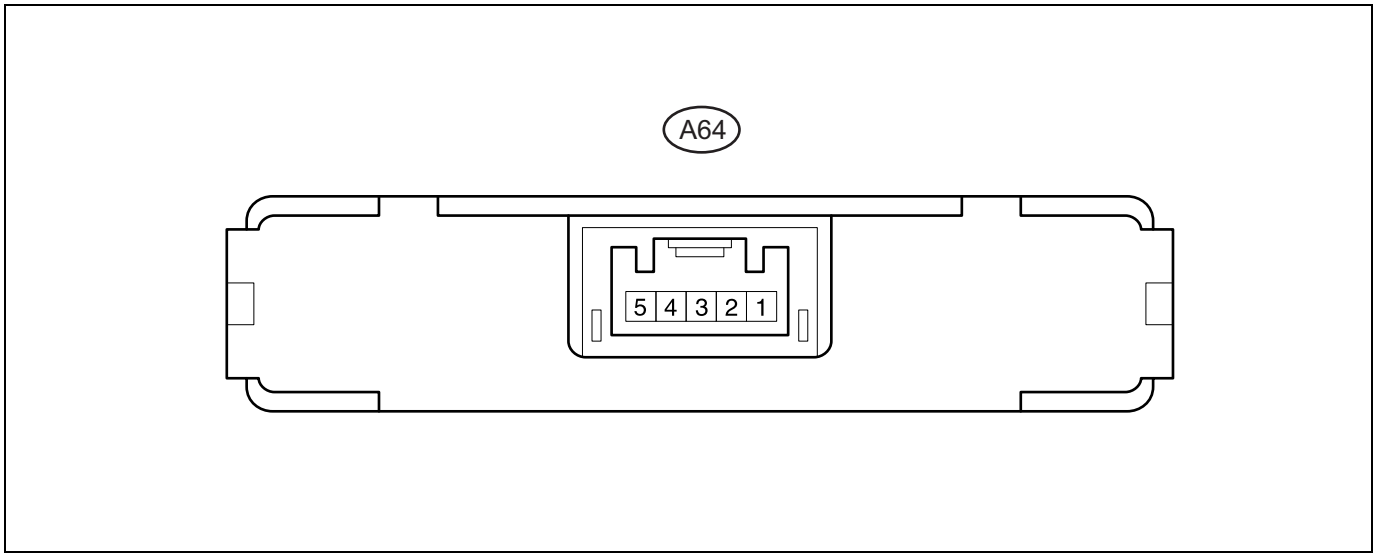

(1) Disconnect the D64 transponder ECM ASSY connector.

(2) Measure the resistance and voltage based on the following table.

Terminal No. (symbol)	Input/output	Terminal description	Conditions	Specified condition
A64-1 (+B) - Chassis ground	Input	Battery power supply	Always	11 to 14 V
A64-5 (GND) - Chassis ground	-	Ground	Always	1 Ωor less

(3) Reconnect the D64 transponder ECM ASSY connector.
(4) Refer to the table below and measure the voltage and check for a pulse.

Terminal No. (symbol)	Input/output	Terminal description	Conditions	Specified condition
A64-3 (UART) - A64-5 (GND)	Input/output	Main body ECM communication	IG SW Off	1 V or less
			IG SW ON	Pulse generation

4. CHECK ECM

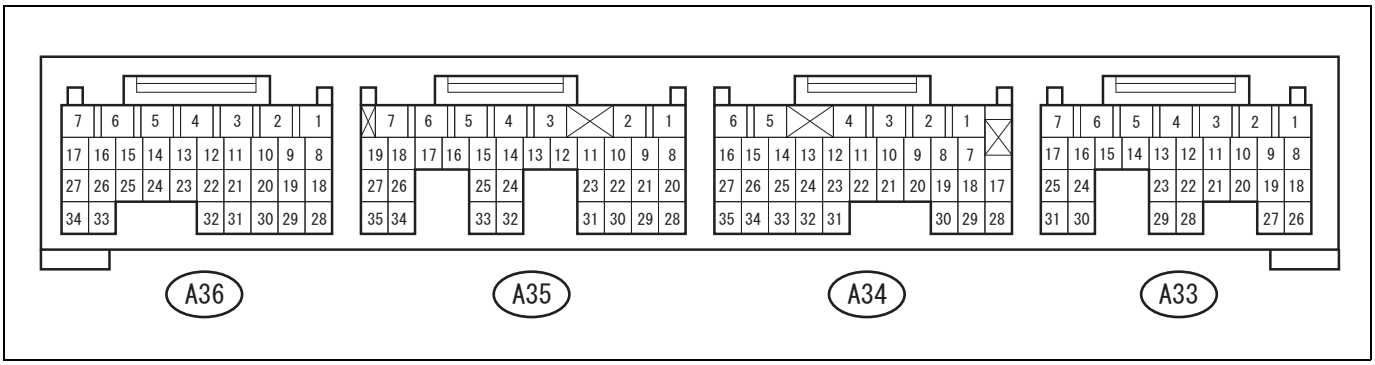

(1) Refer to the table below and measure the resistance and the voltage and check for a pulse.

Terminal No. (symbol)	Input/output	Terminal description	Conditions	Specified condition
A33-1 (VBEC2) - A36-4 (GNDEG1)	Input	Battery power supply	IG SW Off	1 V or less
			IG SW ON	11 to 14 V
A33-2 (BATT) - A36-4 (GNDEG1)	Input	Battery power supply	Always	11 to 14 V
A34-6 (VBEC1) - A36-4 (GNDEG1)	Input	Battery power supply	IG SW Off	1 V or less
			IG SW ON	11 to 14 V
A35-25 (IMO1) - A36-4 (GNDEG1)	Input/output	Main body ECM communication	IG SW Off	1 V or less
			IG SW ON	Pulse generation
A36-4 (GNDEG1) - chassis ground	-	Ground	Always	1 Ωor less

DTC CHECK / CLEAR

1. CHECK FOR MAIN BODY ECM (MULTIPLEX NETWORK BODY ECM) DTC
   (1) Connect the SSM4 to the DLC3.
   (2) Turn the ignition switch to ON.
   (3) Turn the SSM4 on.
   (4) Enter the following menus: [Body Control] →[DTC]
   (5) Check for DTCs.
2. CHECK FOR ECM DTC
   (1) Connect the SSM4 to the DLC3.
   (2) Turn the ignition switch to ON.
   (3) Turn the SSM4 on.
   (4) Enter the following menus: [Engine Control System] →[DTC]
   (5) Check for DTCs.
3. CLEAR MAIN BODY ECM (MULTIPLEX NETWORK BODY ECM) DTC
   (1) Connect the SSM4 to the DLC3.
   (2) Turn the ignition switch to ON.
   (3) Turn the SSM4 on.
   (4) Enter the following menus: [Body Control] →[Clear Memory]
   (5) Clear the DTCs.
4. CLEAR ECM DTC
   (1) Connect the SSM4 to the DLC3.
   (2) Turn the ignition switch to ON.
   (3) Turn the SSM4 on.
   (4) Enter the following menus: [Engine Control System] →[DTC]
   (5) Clear the DTCs.

Data monitor / active test

1. Data monitor

NOTE:

Using the SSM4 to read the [Data monitor] allows the values or states of switches, sensors, actuators and other items to be read without removing any parts. This non-intrusive inspection can be very useful because intermittent conditions or signals may be discovered before parts or wiring is disturbed. Reading the [Data monitor] information early in troubleshooting is one way to save diagnostic time.

CAUTION:

In the table below, the values listed under "Normal Condition" are reference values. Do not depend solely on these reference values when deciding whether a part is faulty or not.

(1) Connect the SSM4 to the DLC3.
(2) Turn the ignition switch to ON.
(3) Turn the SSM4 on.
(4) Enter the following menus: [Body Control] →[Data monitor]
(5) Enter the following menus: [Engine Control System] →[Data monitor]
(6) Read the [Data monitor] according to the display on the SSM4.

Main Body

Tester Display	Measurement Item/Range	Normal Condition	Diagnostic Note
[Ignition]	Ignition switch ON signal / OFF or ON	OFF: Ignition switch ACC or off ON: Ignition switch ON	-
[ACC SW]	Ignition switch ACC signal / OFF or ON	OFF: Ignition switch ACC or off ON: Ignition switch ON	-
[Key Unlock Warning SW]	Unlock warning switch signal / OFF or ON	OFF: No key in ignition key cylinder ON: Key inserted in ignition key cylinder	-
[BATT voltage (control)]	Battery power supply voltage / 10 to 15V	11 to 14V	-
[BATT voltage (BACKUP)]	Battery power supply backup voltage / 10 to 15V	11 to 14V	-
[Ignition Power Supply Voltage]	Ignition switch power supply voltage / 10 to 15V	11 to 14V	-
[ACC voltage]	ACC switch power supply voltage / 10 to 15V	11 to 14V	-
[Immobilizer lamp output]	Security indicator light status / OFF or ON	OFF: Security indicator light OFF ON: Security indicator light blinks	-
[Immobilizer power Supply]	Main body ECU (multiplex network body ECU) engine immobiliser system power supply output status / OFF or ON	OFF: Engine immobiliser unset ON: Engine immobiliser set	-

Engine and ECT

Tester Display	Measurement Item/Range	Normal Condition	Diagnostic Note
[Immobilizer Fuel Cut]	Status of immobiliser fuel cut / ON or OFF	-	-
[Immobilizer Fuel Cut History]	Status of immobiliser fuel cut history / ON or OFF	-	-

2. Active test

NOTE:

Using the SSM4 to perform [Active Test] allows relays, VSVs, actuators and other items to be operated without removing any parts. This non-intrusive functional inspection can be very useful because intermittent operation may be discovered before parts or wiring is disturbed. Performing [Active Test] early in troubleshooting is one way to save diagnostic time. [Data monitor] information can be displayed while performing [Active Test].

(1) Connect the SSM4 to the DLC3.
(2) Turn the ignition switch to ON.
(3) Turn the SSM4 on.
(4) Enter the following menus: [Body Control] →[Active Test]
(5) According to the display on the SSM4, perform the [Active Test].

Main Body

Tester Display	Measurement Item/Range	Normal Condition	Diagnostic Note
[Security Indicator]	Security indicator light	ON/OFF	-

DIAGNOSTIC TROUBLE CODE CHART

Main Body ECU (Multiplex Network Body ECU)

DTC Code	Detection Item	See page
B1401	[M collation NG]	TD - 284
B1402	[Immobilizer Key collation NG]	TD - 285
B1405	[SCU collation NG]	TD - 286
B1406	[SCU_EEPROM_NG]	TD - 287
B1407	[M communication abnormal]	TD - 288
B1408	[Meter EEPROM abnormal]	TD - 288
B1409	[SCU communication abnormal]	TD - 289
B1410	[Transponder communication abnormal]	TD - 293
B1411	[Incorrect Communication of Immobilizer Antenna]	TD - 298

ECM

DTC Code	Detection Item	See page
B1570	[Antenna]	TD - 300
B1571	[Reference Code Incompatibility]	TD - 300
B1572	[IMM Circuit Failure (Except Antenna Circuit)]	TD - 301
B1576	[EGI Control Module EEPROM]	TD - 305
B1577	[IMM Control Module EEPROM]	TD - 306
B1578	[Meter Failure]	TD - 307

TD

DTC B1401 M collation NG

Circuit description

The main body ECM (multiplex network body ECM) memorizes this code if the reference code does not match between the main body ECM (multiplex network body ECM) and the combination meter ASSY.

DTC NO.	DTC detecting condition	Faulty part
B1401	Reference codes are incompatible between main body ECM (multiplex network body ECM) and combination meter ASSY.	Combination meter ASSY

Inspection steps

CAUTION:

- The engine immobilizer system uses the CAN communication system. First, following the “How to troubleshoot”, check that no malfunction is present in the communication system before proceeding with troubleshooting.
- When replacing the combination meter ASSY, refer to the REGISTRATION MANUAL FOR IMMOBILIZER.

1	DTC check

(1) Check the DTC. (Refer to TD - 282)

Criteria: DTC B1407 or B1408 is not output.

NG → Go to "List of diagnostic codes" (Refer to TD - 284)

OK

2	Registration of ECM ID codes (combination meter ASSY - main body ECM)

(1) Register ECM ID codes. (Refer to the "Registration manual for immobilizer")
Criteria: You can register ECM ID codes.

NG → Go to Step 3.

OK

Complete

3	DTC check

(1) Check the DTC. (Refer to TD - 282)
Criteria: DTC B1407 or B1408 is not output.

NG → Go to "List of diagnostic codes" (Refer to TD - 284)

OK

Replacement of combination meter ASSY

DTC	B1402	Immobilizer Key collation NG

Circuit description
The main body ECM (multiplex network body ECM) outputs this code if an unauthorized key (key not registered in main body ECM (multiplex network body ECM)) is inserted in the ignition key cylinder.

DTC NO.	DTC detecting condition	Inspection parts
B1402	When unauthorized key (key not registered in main body ECM (multiplex network body ECM)) is inserted in ignition key cylinder	• Key • Main body ECM (multiplex network body ECM)

Inspection steps
CAUTION:
- The engine immobilizer system uses the CAN communication system. First, following the “How to troubleshoot”, check that no malfunction is present in the communication system before proceeding with troubleshooting.
- When replacing the main body ECM (multiplex network body ECM), refer to the REGISTRATION MANUAL FOR IMMOBILIZER.

1	DTC check

(1) Check the DTC. (Refer to TD - 282)
Criteria: DTC B1410 or B1411 is not output.

NG → Go to "List of diagnostic codes" (Refer to TD - 284)

OK

2	Key registration

(1) Register the key. (Refer to the "Registration manual for immobilizer")
Criteria: Key ID can be registered.

NG → Go to Step 3.

OK

Complete

3	Key registration

(1) Register the key ID by using the key not registered. (Refer to the "Registration manual for immobilizer")
Criteria: Key ID can be registered.

NG → Replace the main body ECM (multiplex network body ECM).

OK

Complete

DTC	B1405	SCU collation NG

Circuit description
The main body ECM (multiplex network body ECM) outputs this code if the reference code does not match between the main body ECM (multiplex network body ECM) and the transponder key ECM ASSY.

DTC NO.	DTC detecting condition	Faulty part
B1405	The reference code of main body ECM (multiplex network body ECM) and the reference code sent from the transponder key ECM ASSY do not match.	Transponder key ECM ASSY

Inspection steps
CAUTION:
- The engine immobilizer system uses the CAN communication system. First, following the “How to troubleshoot”, check that no malfunction is present in the communication system before proceeding with troubleshooting.
- When replacing the transponder key ECM ASSY, refer to the REGISTRATION MANUAL FOR IMMOBILIZER.

1	DTC check

(1) Check the DTC. (Refer to TD - 282)
Criteria: DTC B1406 or B1409 is not output.

NG → Go to "List of diagnostic codes" (Refer to TD - 284)

OK

2	Registration of ECM IDs (transponder key ECM ASSY - main body ECM)

(1) Check the ECM ID registration. (Refer to the "Registration manual for immobilizer")
Criteria: You can register ECM IDs.

NG → Go to Step 3.

OK

Complete

3	DTC check

(1) Check the DTC. (Refer to TD - 282)
Criteria: DTC B1406 or B1409 is not output.

NG → Go to "List of diagnostic codes" (Refer to TD - 284)

OK

Replace transponder key ECM ASSY.

DTC	B1406	SCU EEPROM NG

Circuit description
The main body ECM outputs this code if the internal failure of transponder key ECM ASSY is detected or it can not access ROM inside the transponder key ECM ASSY.

DTC NO.	DTC detecting condition	Faulty part
B1406	When access to the ROM inside the transponder key ECM ASSY is not possible or the internal failure of transponder key ECM ASSY occurs	Transponder key ECM ASSY

Inspection steps
CAUTION:
- The engine immobilizer system uses the CAN communication system. First, following the “How to troubleshoot”, check that no malfunction is present in the communication system before proceeding with troubleshooting.
- When replacing the transponder key ECM ASSY, refer to the REGISTRATION MANUAL FOR IMMOBILIZER.

1	ECM communication ID registration (transponder key ECM ASSY - main body ECM)

(1) Register the ECM communication ID. (Refer to the "Registration manual for immobilizer")

Next

2	DTC check

(1) Check the DTC. (Refer to TD - 282)
Criteria: DTC B1406 is not output.

NG → Replace transponder key ECM ASSY.

OK

Complete

DTC	B1407	M communication error

Circuit description

The main body ECM (multiplex network body ECM) outputs this code if a communication error is detected between the main body ECM (multiplex network body ECM) and the combination meter ASSY.

DTC NO.	DTC detecting condition	Faulty part
B1407	When communication error between main body ECM (multiplex network body ECM) and combination meter ASSY occurs	Combination meter ASSY

TD

Inspection steps

CAUTION:

- The engine immobilizer system uses the CAN communication system. First, following the “How to troubleshoot”, check that no malfunction is present in the communication system before proceeding with troubleshooting.
- When replacing the combination meter ASSY, refer to the REGISTRATION MANUAL FOR IMMOBILIZER.

1	DTC check

(1) Check the DTC. (Refer to TD - 282)

Result

Result	Go to
DTC other than B1407 is not output.	A
DTC other than B1407 is output.	B

B → Go to "List of diagnostic codes" (Refer to TD - 284)

A

Replacement of combination meter ASSY

DTC	B1408	Meter EEPROM error

Circuit description

The main body ECM (multiplex network body ECM) outputs this code if an internal error of the combination meter ASSY is detected.

Diagnostic codes	Detecting conditions	Faulty part
B1408	Internal malfunction of combination meter assembly	Combination meter ASSY

Inspection steps

CAUTION:

- The engine immobilizer system uses the CAN communication system. First, following the “How to troubleshoot”, check that no malfunction is present in the communication system before proceeding with troubleshooting.
- When replacing the combination meter ASSY, refer to the REGISTRATION MANUAL FOR IMMOBILIZER.

1	Registration of ECM ID codes (combination meter ASSY - main body ECM)

(1) Register ECM ID codes. (Refer to the "Registration manual for immobilizer")

Next

2	DTC check

(1) Check the DTC. (Refer to TD - 282)
Criteria: DTC B1408 is not output.

NG → Replacement of combination meter ASSY

OK

Complete

DTC	B1409	SCU communication abnormal

Circuit description

The main body ECM (multiplex network body ECM) outputs this code if a communication error is detected between the main body ECM (multiplex network body ECM) and the transponder key ECM ASSY.

DTC NO.	DTC detecting condition	Inspection parts
B1409	When communication error between main body ECM (multiplex network body ECM) and transponder key ECM ASSY occurs	• Harness or connector • Main body ECM (multiplex network body ECM) • Transponder key ECM ASSY

Circuit figure

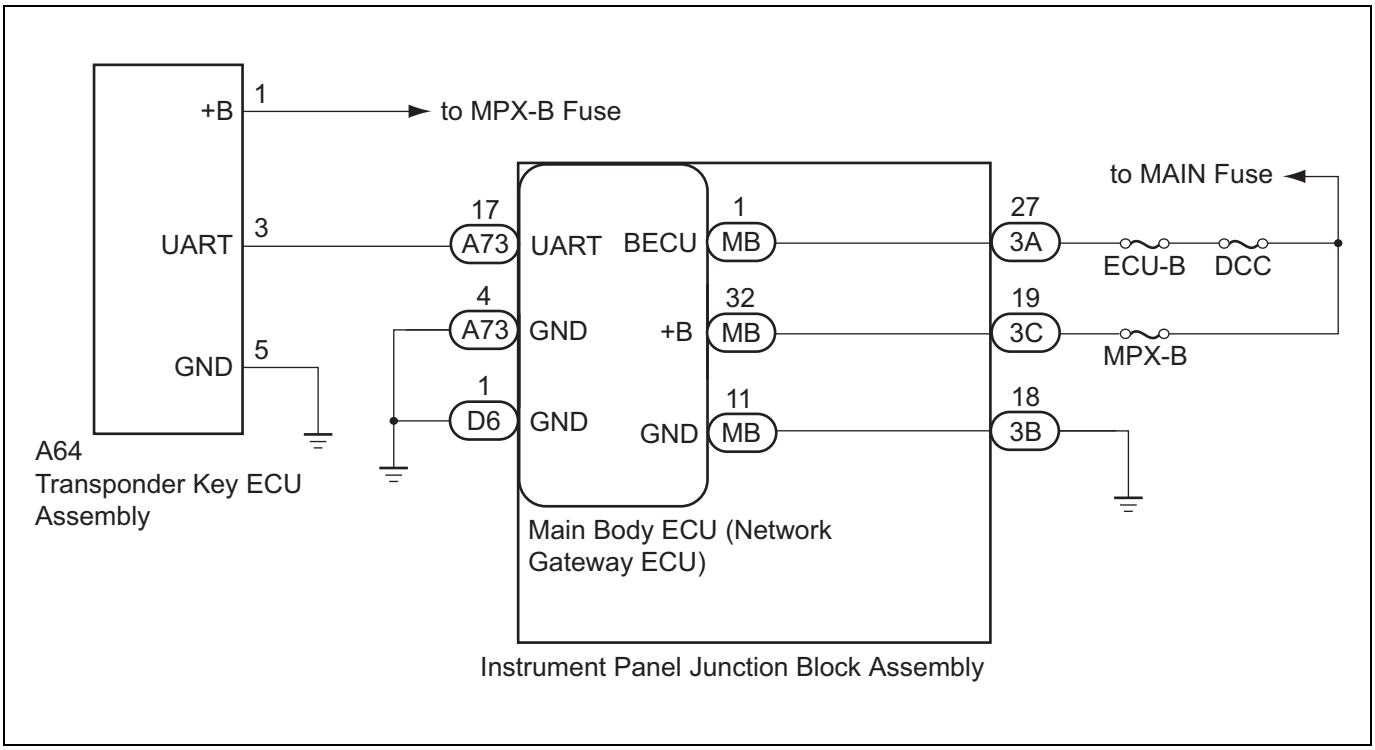

TD

Inspection steps

CAUTION:

- The engine immobilizer system uses the CAN communication system. First, following the “How to troubleshoot”, check that no malfunction is present in the communication system before proceeding with troubleshooting.
- When replacing the main body ECM (multiplex network body ECM), the transponder key, or the transponder key ECM ASSY, refer to the "Registration manual for immobilizer".
- Before performing the following inspection steps, check the fuses related to this system.

1	Check the harness and connector (instrument panel junction block - battery, body, ground).

(1) Disconnect the connector A73 and D6 of the main body ECM (multiplex network body ECM).

(2) Disconnect the connector 3A, 3B, and 3C of instrument panel junction block ASSY.

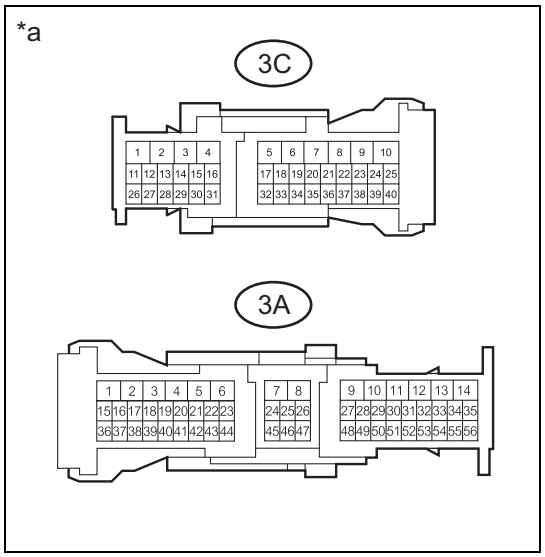

(3) Measure the voltage according to the following table.

Captions in illustration

*a	Connector not connected (Instrument panel junction block ASSY)

Voltage

Inspection terminals	Inspection conditions	Standard value
3A-27 - chassis ground	Always	11 to 14V
3C-19 - Chassis ground	Always	11 to 14V

(4) Measure the resistance according to the following table.

Resistance

Inspection terminals	Inspection conditions	Standard value
3B-18 - chassis ground	Always	1 Ωor less
A73-4 - chassis ground	Always	1 Ωor less
D6-1 - Chassis ground	Always	1 Ωor less

NG → Repair or replacement of the harnesses or connectors

OK

2	Unit inspection of instrument panel junction block ASSY

(1) Remove the instrument panel junction block ASSY.
(2) Remove the main body ECM (multiplex network body ECM) from the instrument panel junction block ASSY.
(3) Measure the resistance according to the following table.

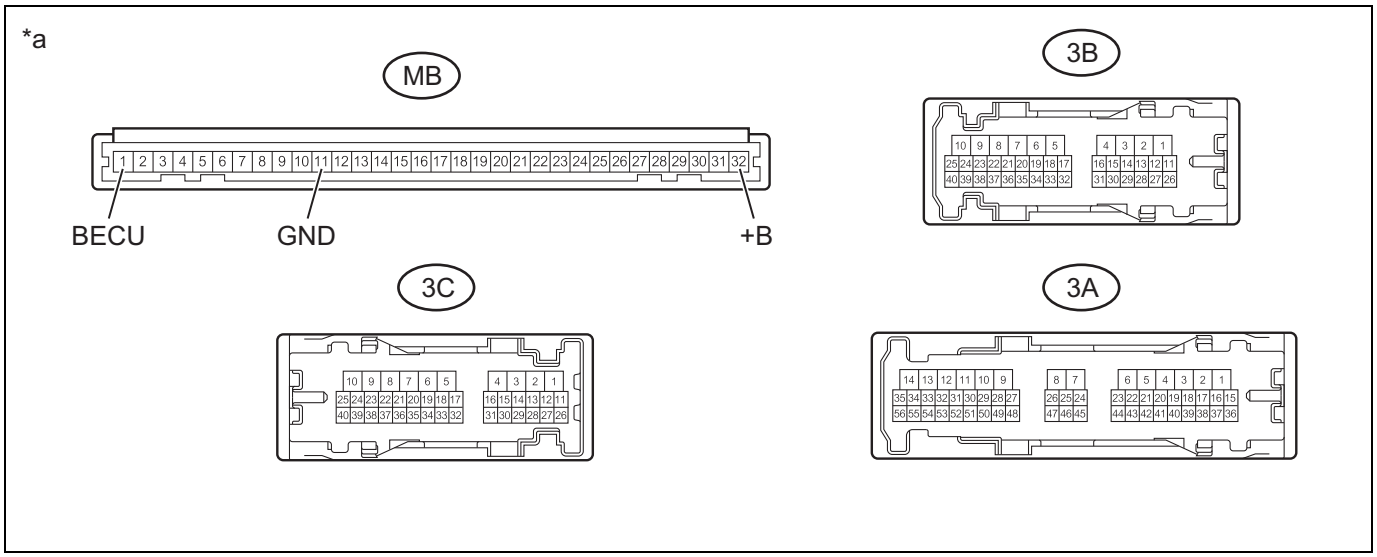

Captions in illustration

*a	Connector not connected (Instrument panel junction block ASSY)	-	-

Resistance

Inspection terminals	Inspection conditions	Standard value
MB-1 - 3A-27	Always	1 Ωor less
MB-32 - 3C-19	Always	1 Ωor less
MB-11 - 3B-18	Always	1 Ωor less

NG → Replacement of the instrument panel junction block ASSY

OK

3	Check the harness and connector (transponder key ECM ASSY - battery, body, ground).

(1) Disconnect the D64 transponder ECM ASSY connector.
(2) Measure the voltage according to the following table.

Voltage

Inspection terminals	Inspection conditions	Standard value
A64-1 (+B) - Chassis ground	Always	11 to 14V

(3) Measure the resistance according to the following table.

Resistance

Inspection terminals	Inspection conditions	Standard value
A64-5 (GND) - Chassis ground	Always	1 Ωor less

NG → Repair or replacement of the harnesses or connectors

OK

4	Check the harness and connector (main body ECM - transponder key ECM ASSY).

TD

(1) Measure the voltage and resistance according to the following table.

Voltage

Inspection terminals	Inspection conditions	Standard value
A73-17 - chassis ground	Always	1 V or less

Resistance

Inspection terminals	Inspection conditions	Standard value
A73-17 - A64-3 (UART)	Always	1 Ωor less
A73-17 - chassis ground	Always	10 kΩ or more

NG → Repair or replacement of the harnesses or connectors

OK

5	Replace transponder key ECM ASSY.

(1) Temporarily replace the transponder key ECM with new one or one that is functioning properly. (Refer to the "Registration manual for immobilizer")

CAUTION:

Do not perform registration.

Next

6	DTC check

(1) Check the DTC. (Refer to TD - 282)

Criteria: DTC B1409 is not output.

NG → Return the transponder key ECM ASSY to its original position, and replace the main body ECM (multiplex network body ECM)

OK

END (faulty transponder key ECM ASSY)

DTC	B1410	Transponder communication error

Circuit description

The main body ECM (network gateway computer) outputs this code if a communication error is detected between the key and the main body ECM (network gateway computer) or if the key for another vehicle is inserted in the ignition key cylinder.

DTC NO.	DTC detecting condition	Inspection parts
B1410	Communication error between the key and the main body ECM (network gateway computer)	• Key • Transponder key amplifier • Instrument panel junction block ASSY • Main body ECM (Network gateway computer) • Wiring harness or connector

Circuit figure

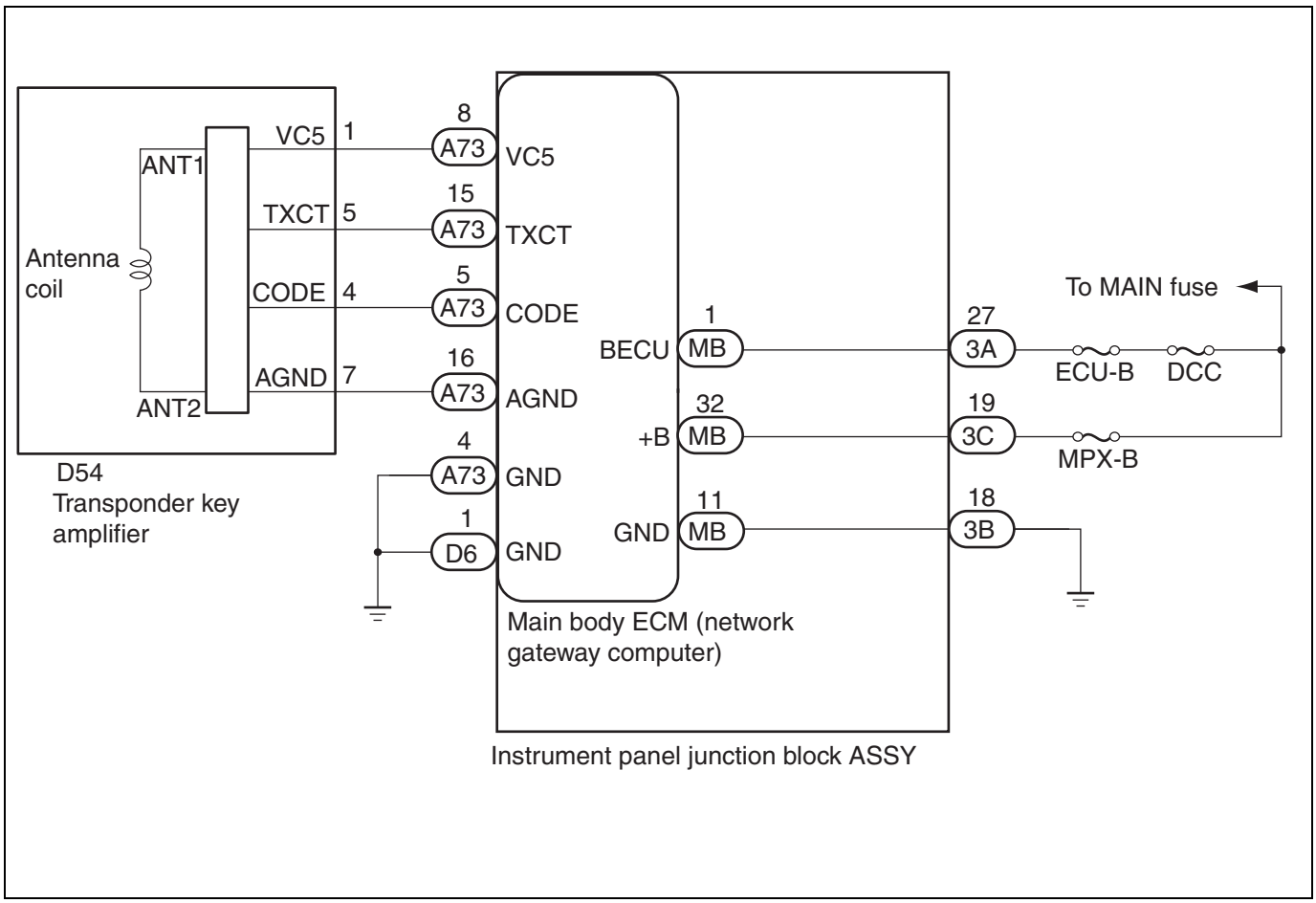

Inspection steps

CAUTION:

- The engine immobilizer system uses the CAN communication system. First, following the “How to troubleshoot”, check that no malfunction is present in the communication system before proceeding with troubleshooting.
- When replacing the main body ECM (multiplex network body ECM), refer to the "Registration manual for immobilizer".
- Before performing the troubleshooting, check the fuse of this circuit.

1	DTC check

(1) Insert the registered key into the ignition key cylinder.
(2) Using the SSM4, check if the diagnostic code is output for all keys registered with the vehicle.

Result

Result	Go to
Diagnostic code B1410 is output for all keys.	A
There is a key which does not output diagnostic code B1410.	B

B → Replace the key that does not output B1410.

A

TD

2	Inspection of the wire harnesses and connectors (power supply, GND)

(1) Disconnect connectors A73 and D6 for the main body ECM (network gateway computer).
(2) Disconnect connectors 3A, 3B, and 3C for the instrument panel junction block ASSY.
(3) Measure the voltage and resistance between terminals.

Voltage

Inspection terminals	Inspection conditions	Standard value
3A-27 - chassis ground	Always	11 to 14 V
3C-19 - Chassis ground	Always	11 to 14 V

Resistance

Inspection terminals	Inspection conditions	Standard value
3B-18 - chassis ground	Always	Less than 1 Ω
A73-4 (GND) - chassis ground	Always	Less than 1 Ω
D6-1 (GND) - chassis ground	Always	Less than 1 Ω

NG → Repair or replacement of wiring harness or connector

OK

3	Unit inspection of the instrument panel junction block ASSY.

(1) Remove the main body ECM (network gateway computer) from the instrument panel junction block ASSY.
(2) Measure the resistance between the terminals.

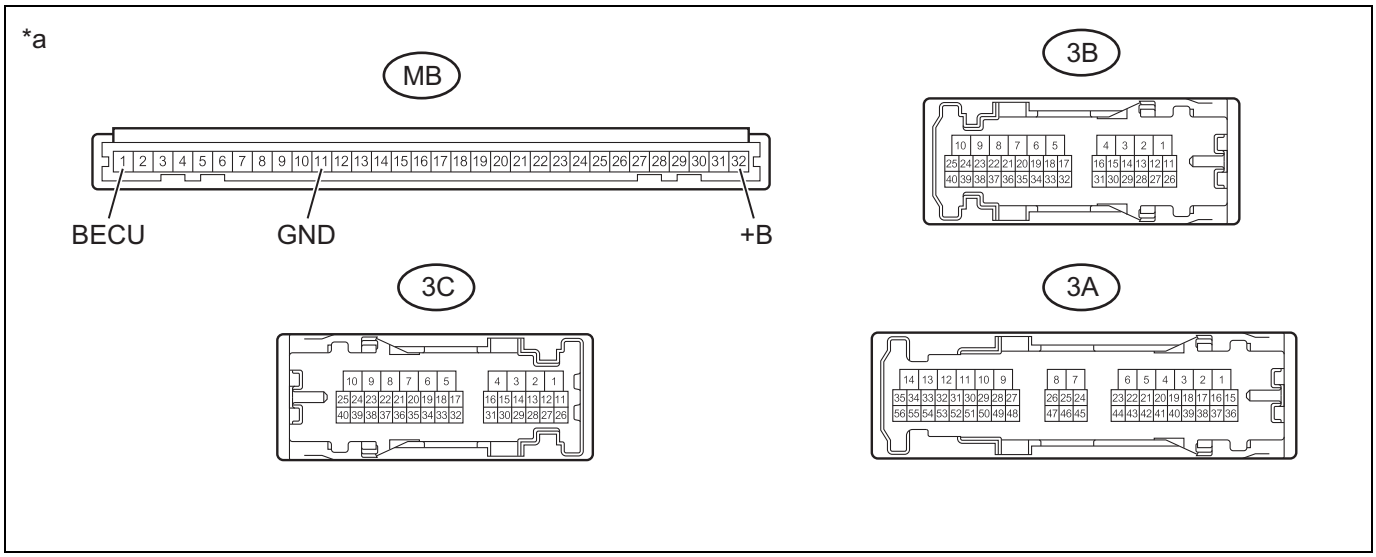

Resistance

Inspection terminals	Inspection conditions	Standard value
MB-1 (BECU) - 3A-27	Always	Less than 1 Ω
MB-32 (+B) - 3C-19	Always	Less than 1 Ω
MB-11 (GND) - 3B-18	Always	Less than 1 Ω

Captions in illustration

*a	Connector not connected (Instrument panel junction block ASSY)	-	-

NG → Replacement of the instrument panel junction block ASSY

OK

4	Inspection of the transponder key amplifier (power supply circuit)

(1) Install the main body ECM (network gateway computer) on the instrument panel junction block ASSY.
(2) Connect connectors 3A, 3B, and 3C for the instrument panel junction block ASSY.
(3) Disconnect the connector D54 of the transponder key amplifier.
(4) Measure the voltage between the terminals.

Voltage

Inspection terminals	Inspection conditions	Standard value
D54-1 (VC5) - Chassis ground	Approximately 200 ms have passed after key is inserted in ignition key cylinder	4.5 to 5.5 V

Result

Result	Go to
NG	A
OK	B

B → Go to Step 6.

A

5	Inspection of wiring harness and connector (Transponder key amplifier - Main body ECM (network gateway computer))

(1) Disconnect the A73 connector of the main body ECM (network gateway computer).
(2) Measure the resistance between the terminals.

Resistance

Inspection terminals	Inspection conditions	Standard value
D54-1 (VC5) - A73-8 (VC5)	Always	Less than 1 Ω
D54-1 (VC5) - Chassis ground	Always	10 kΩ or more

NG → Repair or replacement of wiring harness or connector

TD

OK

Replacement of the main body ECM (Network gateway computer)

6	Inspection of the wiring harness and the connector (transponder key amplifier - chassis ground)

(1) Measure the resistance between the terminals.

Resistance

Inspection terminals	Inspection conditions	Standard value
D54-7 (AGND) - Chassis ground	Always	Less than 1 Ω

Result

Result	Go to
NG	A
OK	B

B → Go to Step 8.

A

7	Inspection of wiring harness and connector (Transponder key amplifier - Main body ECM (network gateway computer))

(1) Disconnect the A73 connector of the main body ECM (network gateway computer).
(2) Measure the resistance between the terminals.

Resistance

Inspection terminals	Inspection conditions	Standard value
D54-7 (AGND) - A73-16 (AGND)	Always	Less than 1 Ω

NG → Repair or replacement of wiring harness or connector

OK

Replacement of the main body ECM (Network gateway computer)

8	Inspection of wiring harness and connector (Transponder key amplifier - Main body ECM (network gateway computer))

(1) Disconnect the A73 connector of the main body ECM (network gateway computer).
(2) Measure the resistance between the terminals.

Resistance

Inspection terminals	Inspection conditions	Standard value
D54-5 (TXCT) - A73-15 (TXCT)	Always	Less than 1 Ω
D54-4 (CODE) - A73-5 (CODE)	Always	Less than 1 Ω
D54-5 (TXCT) - Chassis ground	Always	10 kΩ or more
D54-4 (CODE) - Chassis ground	Always	10 kΩ or more

NG > Repair or replacement of wiring harness or connector

OK

9	Replacement of the transponder key amplifier

(1) Replace with a new or normal transponder key amplifier.

Next

10	DTC check

(1) Insert the key into the ignition key cylinder, and then turn to IG OFF or ACC ON.
(2) Check DTC using SSM4.
Criteria: DTC B1410 is not output

NG > Go to Step 11.

OK

Complete (Faulty transponder key amplifier)

11	DTC check

(1) Replace the key that outputs diagnostic code B1410, and perform registration. (Refer to the "Registration manual for immobilizer")
(2) Check DTC using SSM4.
Criteria: DTC B1410 is not output

NG > Replacement of the main body ECM (network gateway computer) (Refer to PD - 23)

TD

OK

Complete (Faulty key)

DTC	B1411	Immobilizer antenna communication failure

Circuit description

The main body ECM (network gateway computer) outputs this code if a fault is detected in the antenna coil inside the transponder key amplifier.

DTC NO.	DTC detecting condition	Inspection parts
B1411	Faulty antenna coil inside transponder key amplifier	• Transponder key amplifier • Main body ECM (Network gateway computer)

Inspection steps

CAUTION:

- The engine immobilizer system uses the CAN communication system. First, following the “How to troubleshoot”, check that no malfunction is present in the communication system before proceeding with troubleshooting.
- When replacing the main body ECM (network gateway computer), refer to the "Registration manual for immobilizer".

TD

1	DTC check

(1) Remove the key from the ignition key cylinder.
(2) Insert the key into the ignition key cylinder, and then turn the ignition switch to ON.
(3) Check DTC using SSM4.
Criteria: DTC B1411 is not output

NG → Go to Step 2.

OK

Complete

2	Replacement of the transponder key amplifier

(1) Replace with a new or normal transponder key amplifier.

Next

3	DTC check

(1) Insert the key into the ignition key cylinder, and then turn the ignition switch to ON.
(2) Check DTC using SSM4.
Criteria: DTC B1411 is not output

NG → Replacement of the main body ECM (Network gateway computer)

OK

Complete (Faulty transponder key amplifier)

DTC	B1570	Antenna

Circuit description

The main body ECM (multiplex network body ECM) outputs this code if a fault is detected in the antenna coil inside the transponder key amplifier.

DTC NO.	DTC detecting condition	Inspection parts
B1570	Faulty antenna coil inside transponder key amplifier	• Transponder key amplifier • Main body ECM (multiplex network body ECM)

Inspection steps

CAUTION:

- The engine immobilizer system uses the CAN communication system. First, following the “How to troubleshoot”, check that no malfunction is present in the communication system before proceeding with troubleshooting. (Refer to TD - 277)
- When replacing the main body ECM (multiplex network body ECM), refer to the REGISTRATION MANUAL FOR IMMOBILIZER.

TD

1	DTC check

(1) Remove the key from the ignition key cylinder.
(2) Insert the key into the ignition key cylinder, and then turn the ignition switch to ON.
(3) Check DTC using SSM4. (Refer to TD - 282)
Criteria: DTC B1570 is not output

NG → Go to Step 2.

OK

Complete

2	Replace the transponder key amplifier.

(1) Replace with a new or normal transponder key amplifier. (Refer toTD - 337)

Next

3	DTC check

(1) Insert the key into the ignition key cylinder, and then turn the ignition switch to ON.
(2) Check DTC using SSM4. (Refer to TD - 282)
Criteria: DTC B1570 is not output

NG → Replacement of main body ECM (multiplex network body ECM) (Refer to PD - 23)

OK

Complete (Faulty transponder key amplifier)

DTC	B1571	Mismatching identification code (immobilizer collation mismatched)

Circuit description

The ECM outputs this code if the reference code between main body ECM (multiplex network body ECM) and the ECM does not match.

DTC NO.	DTC detecting condition	Inspection parts
B1571	Reference codes are incompatible between main body ECM (multiplex network body ECM) and ECM.	• ECM • Main body ECM (multiplex network body ECM)

TD

Inspection steps

CAUTION:

- The engine immobilizer system uses the CAN communication system. First, following the “How to troubleshoot”, check that no malfunction is present in the communication system before proceeding with troubleshooting.
- When replacing the main body ECM (multiplex network body ECM) or ECM, refer to the REGISTRATION MANUAL FOR IMMOBILIZER.

1	Check the number of registered key.

(1) Connect the SSM4 to the DLC3.
(2) Turn the ignition switch to ON.
(3) Turn on the SSM4.
(4) Enter the following menus: [Body Control] →[Data monitor] →[Number of registered ID]
(5) Check the number of registered key.

Result

Result	Go to
Number of registered keys is 0	A
Number of registered keys is 1 or more.	B

B → Go to Step 3.

A

2	Key registration

(1) Register the key. (Refer to the "Registration manual for immobilizer")
Criteria: Key ID can be registered.

NG → Go to Step 4.

OK

Complete

3	Registration of ECM ID codes (ECM - main body ECM (multiplex network body ECM))

(1) Register ECM ID codes. (Refer to the "Registration manual for immobilizer")
Criteria: You can register ECM ID codes.

NG → Go to Step 4.

OK

Complete

4	DTC check

(1) Check the DTC. (Refer to TD - 282)
Result

Result	Go to
DTC B1571 is not output.	A
DTC other than B1571 is output.	B

B → Go to "List of diagnostic codes" (Refer to TD - 284)

A

5	Replacement of the ECM

(1) Temporarily replace the ECM with new one or one that is functioning properly.

Next

6	Registration of ECM ID codes (ECM - main body ECM (multiplex network body ECM))

(1) Register ECM ID codes. (Refer to the "Registration manual for immobilizer")
Criteria: You can register ECM ID codes.

NG → Replacement of main body ECM (multiplex network body ECM)

OK

Complete

DTC	B1572	IMM Circuit Failure (Except Antenna Circuit)

Circuit description
The ECM outputs this code if a communication error is detected between main body ECM (multiplex network body ECM) and ECM.

DTC NO.	DTC detecting condition	Inspection parts
B1572	When communication error between main body ECM (multiplex network body ECM) and ECM occurs	• Harness or connector • ECM • Instrument panel junction block ASSY • Main body ECM (multiplex network body ECM)

Circuit figure

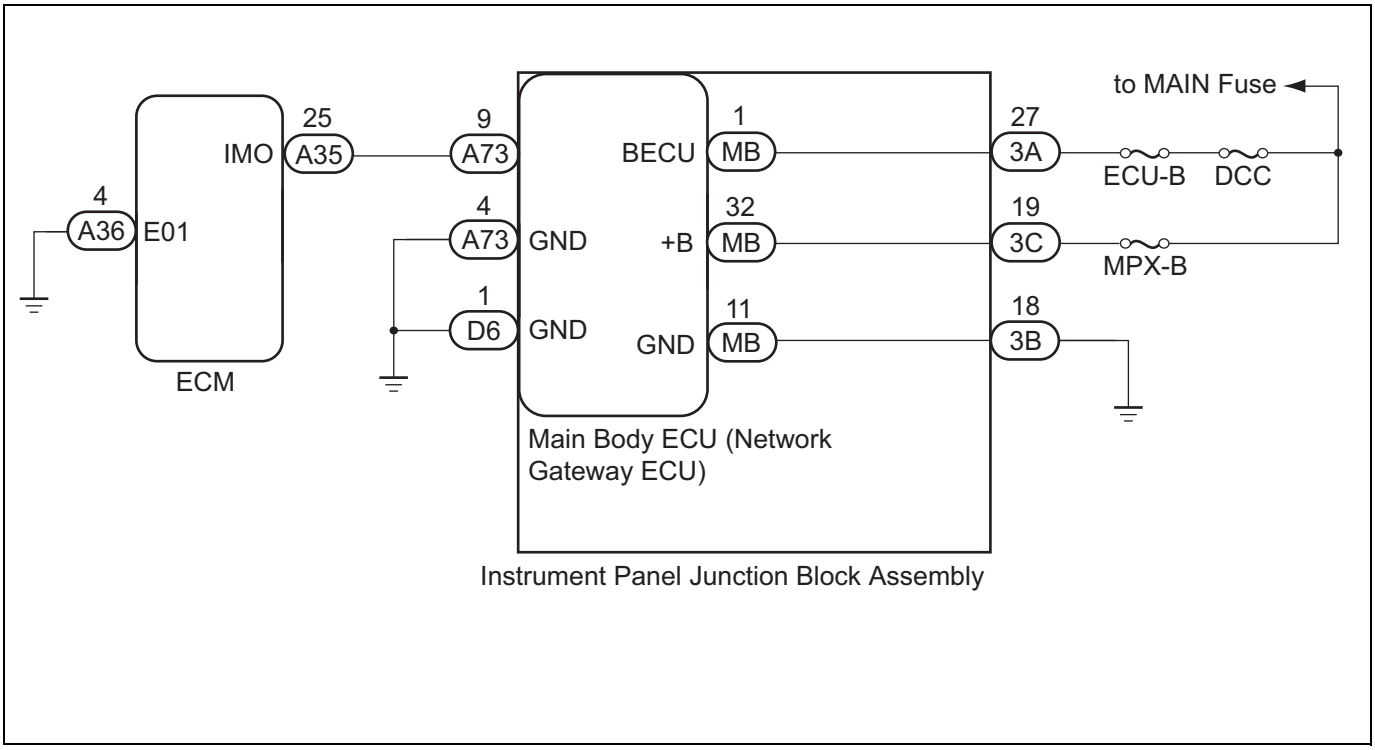

TD

Inspection steps

CAUTION:

- The engine immobilizer system uses the CAN communication system. First, following the “How to troubleshoot”, check that no malfunction is present in the communication system before proceeding with troubleshooting.
- When replacing the main body ECM (multiplex network body ECM) or ECM, refer to the REGISTRATION MANUAL FOR IMMOBILIZER.
- Before performing the following inspection steps, check the fuses related to this system.

1	Check the harness and connector (battery, body, GND-output short).

(1) Disconnect the connector A73 and D6 of the main body ECM (multiplex network body ECM).

(2) Disconnect the connector 3A, 3B, and 3C of instrument panel junction block ASSY.

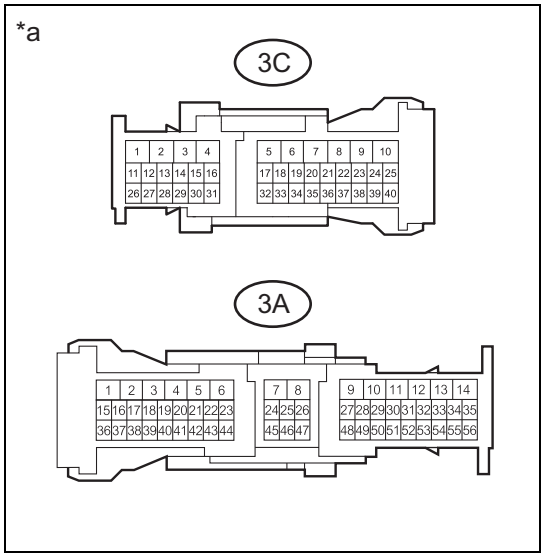

(3) Measure the voltage according to the following table.

Captions in illustration

*a	Connector not connected (Instrument panel junction block ASSY)

Voltage

Inspection terminals	Inspection conditions	Standard value
3A-27 - chassis ground	Always	11 to 14 V
3C-19 - Chassis ground	Always	11 to 14 V

(4) Measure the resistance according to the following table.

Resistance

Inspection terminals	Inspection conditions	Standard value
3B-18 - chassis ground	Always	1 Ωor less
A73-4 - chassis ground	Always	1 Ωor less
D6-1 - Chassis ground	Always	1 Ωor less

NG → Repair or replacement of the harnesses or connectors

OK

2	Inspect the instrument panel junction block ASSY unit.

(1) Remove the instrument panel junction block ASSY.
(2) Remove the main body ECM (multiplex network body ECM) from the instrument panel junction block ASSY.
(3) Measure the resistance according to the following table.

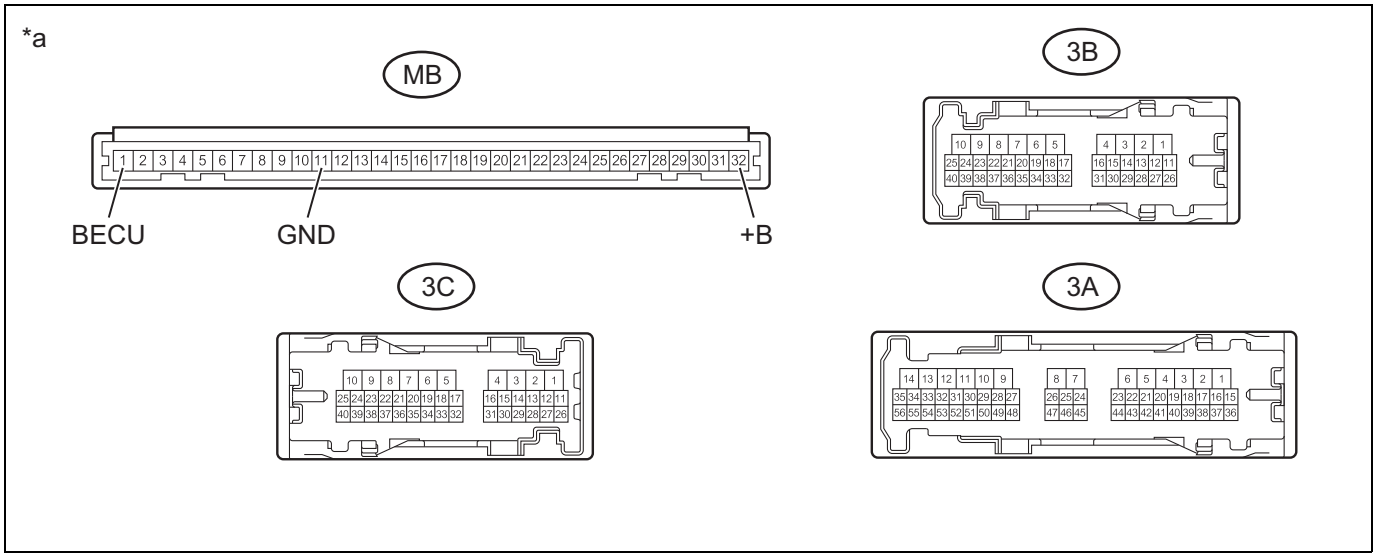

Captions in illustration

*a	Connector not connected (Instrument panel junction block ASSY)	-	-

Resistance

Inspection terminals	Inspection conditions	Standard value
MB-1 - 3A-27	Always	1 Ωor less

Inspection terminals	Inspection conditions	Standard value
MB-32 - 3C-19	Always	1 Ωor less
MB-11 - 3B-18	Always	1 Ωor less

NG → Replacement of the instrument panel junction block ASSY

OK

3	Check the harness and connector (main body ECM (multiplex network body ECM) - ECM).

(1) Disconnect the connector A73 of the main body ECM (multiplex network body ECM).
(2) Disconnect the A35 and A36 ECM connector.
(3) Measure the voltage and resistance according to the following table.

Voltage

Inspection terminals	Inspection conditions	Standard value
A73-9 - chassis ground	Always	1 V or less
A35-25 (IMO1) - Chassis ground	Always	1 V or less

Resistance

Inspection terminals	Inspection conditions	Standard value
A73-9 - A35-25 (IMO1)	Always	1 Ωor less
A36-4 (GNDEG1) - chassis ground	Always	1 Ωor less
A73-9 - chassis ground	Always	10 kΩ or more

NG → Repair or replacement of the harnesses or connectors

OK

4	Replacement of the ECM

(1) Temporarily replace the ECM with new one or one that is functioning properly.
(2) Register the ECM communication ID (Refer to the REGISTRATION MANUAL FOR IMMOBILIZER).

Next

5	DTC check

(1) Turn IG to ON and wait for 5 seconds.
(2) Check the DTC. (Refer to TD - 282)
Criteria: DTC B1572 is not output.

NG → Replacement of main body ECM (multiplex network body ECM)

OK

END (faulty ECM)

DTC	B1576	EGI unit EEPROM

Circuit description

The ECM outputs this code if the internal error is detected in the ECM or it can not access ROM inside the ECM during key registration.

DTC NO.	DTC detecting condition	Inspection parts
B1576	• Internal fault of ECM • When the access to the ECM ROM is not possible during key registration.	ECM

Inspection steps

CAUTION:

- The engine immobilizer system uses the CAN communication system. First, following the “How to troubleshoot”, check that no malfunction is present in the communication system before proceeding with troubleshooting.
- When replacing the ECM, refer to the REGISTRATION MANUAL FOR IMMOBILIZER.

1	Registration of ECM ID codes (ECM - main body ECM (multiplex network body ECM))

(1) Register ECM ID codes. (Refer to the "Registration manual for immobilizer")
Criteria: You can register ECM ID codes.

NG → Go to Step 2.

OK →

Complete

2	Registration of ECM ID codes (ECM - main body ECM (multiplex network body ECM))

(1) Register ECM ID codes. (Refer to the "Registration manual for immobilizer")
Criteria: You can register ECM ID codes.

NG → Go to Step 3.

OK →

Complete

3	Registration of ECM ID codes (ECM - main body ECM (multiplex network body ECM))

(1) Register ECM ID codes. (Refer to the "Registration manual for immobilizer")
Criteria: You can register ECM ID codes.

NG → Replacement of the ECM

OK →

Complete

DTC	B1577	Immobilizer unit EEPROM

Circuit description

The ECM outputs this code if an internal fault is detected in the main body ECM (multiplex network body ECM) or it can not access ROM inside the main body ECM (multiplex network body ECM).

DTC NO.	DTC detecting condition	Inspection parts
B1577	• Internal fault of main body ECM (multiplex network body ECM) • When inaccessible to ROM in main body ECM (multiplex network body ECM)	Main body ECM (multiplex network body ECM)

Inspection steps

CAUTION:

- The engine immobilizer system uses the CAN communication system. First, following the “How to troubleshoot”, check that no malfunction is present in the communication system before proceeding with troubleshooting.
- When replacing the main body ECM (multiplex network body ECM), refer to the REGISTRATION MANUAL FOR IMMOBILIZER.

TD

1	Registration of ECM ID codes (Main body ECM (multiplex network body ECM) - ECM)

(1) Register ECM ID codes. (Refer to the "Registration manual for immobilizer")
Criteria: You can register ECM ID codes.

NG → Go to Step 2.

OK

Complete

2	ECM communication ID registration (Main body ECM (multiplex network body ECM) - ECM)

(1) Register the ECM communication ID. (Refer to the "Registration manual for immobilizer")
Criteria: The ECM communication ID can be registered.

NG → Go to Step 3.

OK

Complete

3	ECM communication ID registration (Main body ECM (multiplex network body ECM) - ECM)

(1) Register the ECM communication ID. (Refer to the "Registration manual for immobilizer")
Criteria: The ECM communication ID can be registered.

NG → Replacement of main body ECM (multiplex network body ECM)

OK

Complete

DTC	B1578	Meter abnormal

Circuit description

The ECM outputs this code if a reference code incompatibility is detected between the combination meter ASSY or the transponder key ECM ASSY and the main body ECM (multiplex network body ECM), or a communication error is detected between the main body ECM (multiplex network body ECM) and the ECM.

DTC NO.	DTC detecting condition	Inspection parts
B1578	• Reference code incompatible between combination meter ASSY or transponder key ECM ASSY and main body ECM (multiplex network body ECM) • When communication error between main body ECM (multiplex network body ECM) and ECM occurs	• Harness or connector • ECM • Instrument panel junction block ASSY • Main body ECM (multiplex network body ECM)

TD

Circuit figure

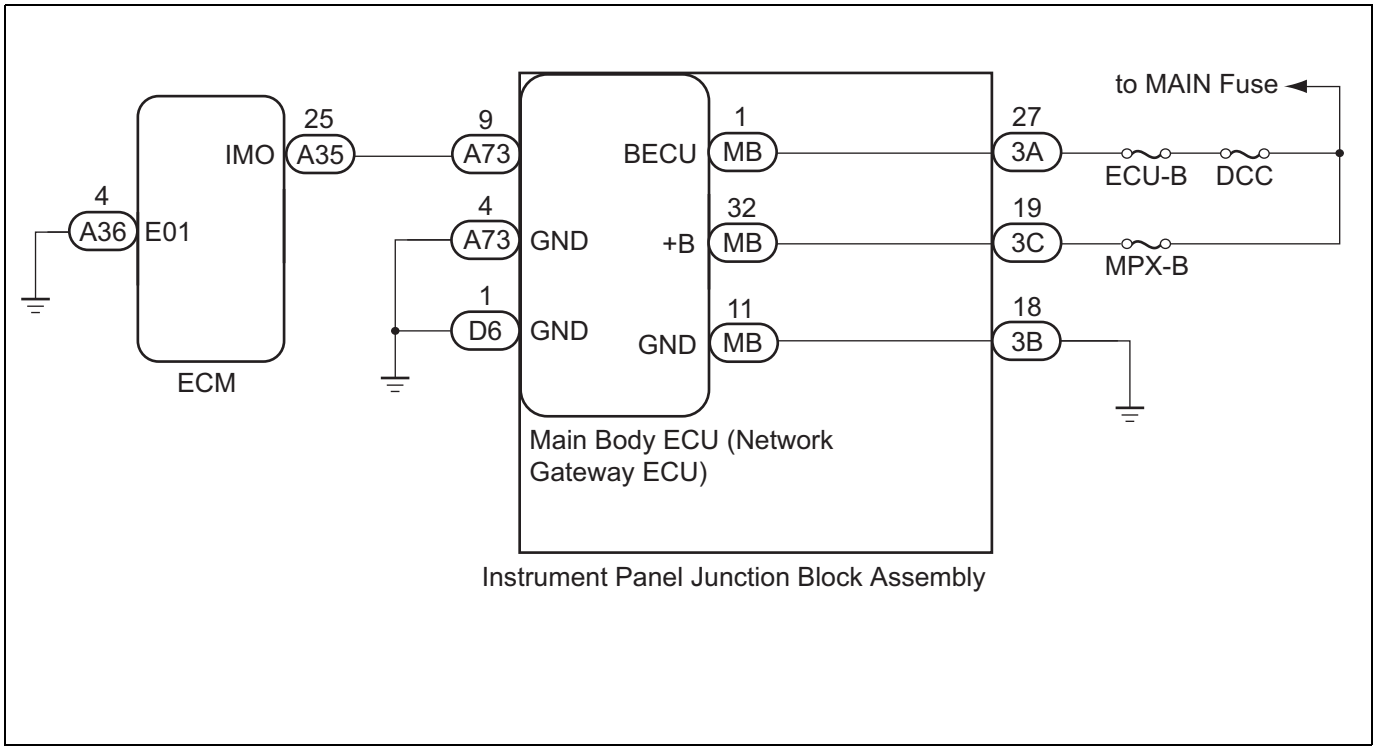

Inspection steps

CAUTION:

- The engine immobilizer system uses the CAN communication system. First, following the “How to troubleshoot”, check that no malfunction is present in the communication system before proceeding with troubleshooting.
- When replacing the main body ECM (multiplex network body ECM) or ECM, refer to the REGISTRATION MANUAL FOR IMMOBILIZER.
- Before performing the following inspection steps, check the fuses related to this system.

1	DTC check

(1) Check the DTC. (Refer to TD - 282)
Criteria: DTC B1401, B1405, B1406, B1407, B1408, and B1409 are not output.

NG → Go to "List of diagnostic codes" (Refer to TD - 284)

OK

2	Check the harness and connector (battery, body, GND-output short).

(1) Disconnect the connector A73 and D6 of the main body ECM (multiplex network body ECM).
(2) Disconnect the connector 3A, 3B, and 3C of instrument panel junction block ASSY.

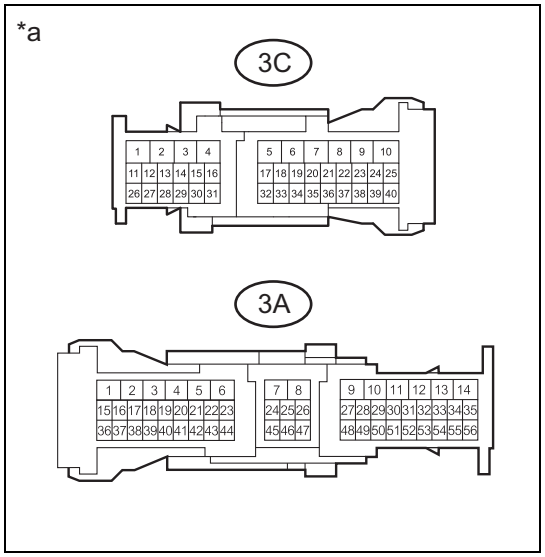

(3) Measure the voltage according to the following table.
Captions in illustration

*a	Connector not connected (Instrument panel junction block ASSY)

Voltage

Inspection terminals	Inspection conditions	Standard value
3A-27 - chassis ground	Always	11 to 14 V
3C-19 - Chassis ground	Always	11 to 14 V

(4) Measure the resistance according to the following table.
Resistance

Inspection terminals	Inspection conditions	Standard value
3B-18 - chassis ground	Always	1 Ωor less
A73-4 - chassis ground	Always	1 Ωor less
D6-1 - Chassis ground	Always	1 Ωor less

NG → Repair or replacement of the harnesses or connectors

OK

3	Unit inspection of the instrument panel junction block ASSY.

(1) Remove the instrument panel junction block ASSY.
(2) Remove the main body ECM (multiplex network body ECM) from the instrument panel junction block ASSY.
(3) Measure the resistance according to the following table.

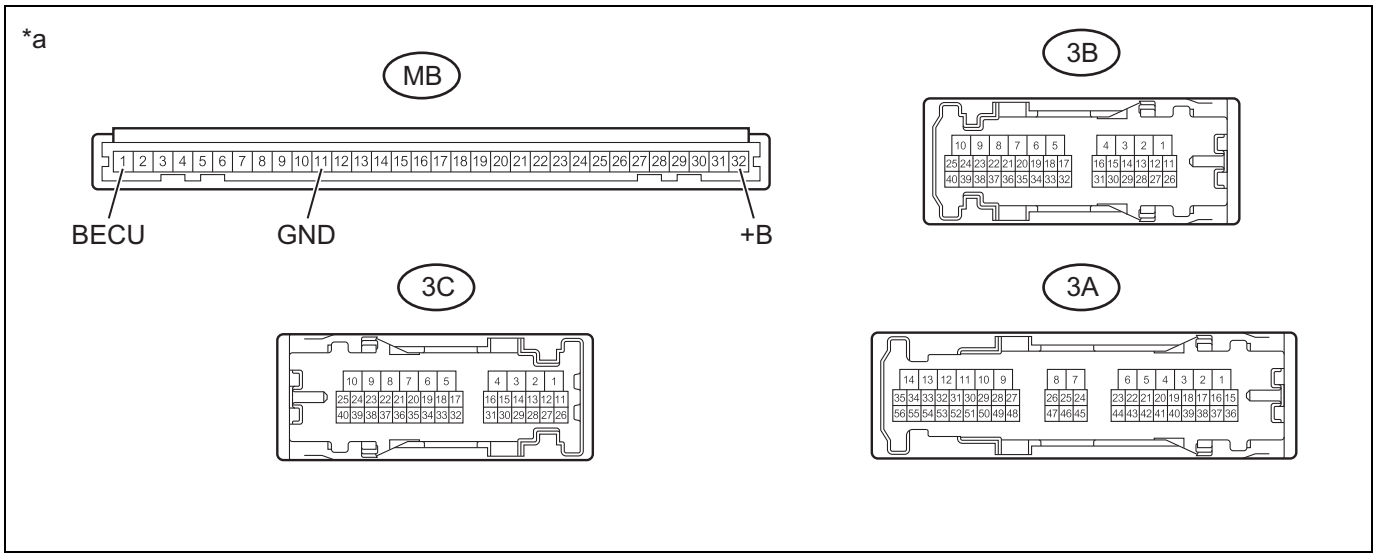

Captions in illustration

*a	Connector not connected (Instrument panel junction block ASSY)	-	-

TD

Resistance

Inspection terminals	Inspection conditions	Standard value
MB-1 - 3A-27	Always	1 Ωor less
MB-32 - 3C-19	Always	1 Ωor less
MB-11 - 3B-18	Always	1 Ωor less

NG → Replacement of the instrument panel junction block ASSY

OK

4	Check the harness and connector (main body ECM (multiplex network body ECM) - ECM).

(1) Disconnect the connector A73 of the main body ECM (multiplex network body ECM).
(2) Disconnect the A35 and A36 ECM connector.
(3) Measure the voltage and resistance according to the following table.

Voltage

Inspection terminals	Inspection conditions	Standard value
A73-9 - chassis ground	Always	1 V or less
A35-25 (IMO1) - Chassis ground	Always	1 V or less

Resistance

Inspection terminals	Inspection conditions	Standard value
A73-9 - A35-25 (IMO1)	Always	1 Ωor less
A36-4 (GNDEG1) - chassis ground	Always	1 Ωor less
A73-9 - chassis ground	Always	10 kΩ or more

NG → Repair or replacement of the harnesses or connectors

OK

5	Replacement of the ECM

(1) Temporarily replace the ECM with new one or one that is functioning properly.
(2) Register the ECM communication ID. (Refer to the "Registration manual for immobilizer")

Next

6	DTC check

(1) Check the DTC. (Refer to TD - 282)
Criteria: The diagnostic code B1578 is not output.

NG → Replacement of main body ECM (multiplex network body ECM)

OK

Complete

Security indicator does not blink

Circuit description

When the immobilizer function is set, the main body ECM (network gateway computer) makes the security indicator light in the combination meter ASSY blink.

Circuit figure

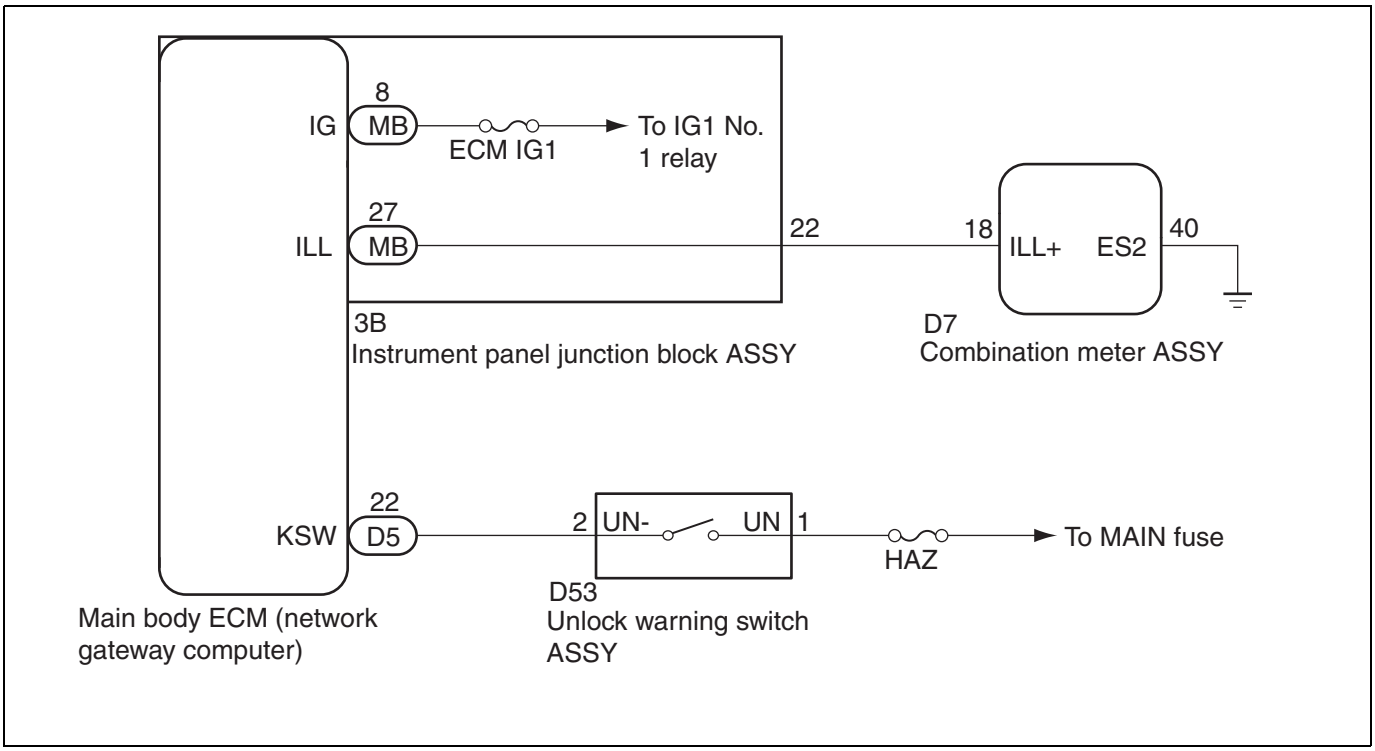

Inspection steps

CAUTION:

- The engine immobilizer system uses the CAN communication system. First, following the “How to troubleshoot”, check that no malfunction is present in the communication system before proceeding with troubleshooting.
- When replacing the combination meter ASSY and the main body ECM (multiplex network body ECM), refer to the "Registration manual for immobilizer".

1	DTC check

(1) Check DTC using SSM4. (Refer to TD - 282)

Criteria: Diagnostic code is not output.

NG → Go to "List of diagnostic codes" (Refer to TD - 284)

OK

2	Implementation of the SSM4 active test (security indicator)

(1) Use the SSM4 to perform the active test, and check that the security indicator light lights up. (Refer to TD - 283)

[SSM4 screen: [Each System] →[Body Control] →[Active Test]]

Item	Drive
[Security Indicator]	Output/stop

Criteria: The security indicator light lights up / turns off.

NG → Go to Step 6.

OK

3	Reading SSM4 data (IG SW, key unlock warning SW)

(1) Using the SSM4, follow the screen display and read the data monitor. (Refer to TD - 283)

[SSM4 screen: [Each System] →[Body Control] →[Data monitor]]

Item Name	Description/display range	Normal value	Remarks
[Ignition]	The ignition switch status is displayed. Display range: [ON]/[OFF]	[ON]: IG ON [OFF]: IG OFF	-
[Key Unlock Warning SW]	Status of the unlock warning switch Display range: [ON]/[OFF]	[ON]: The key is in the ignition key cylinder. [OFF]: The key is not in the ignition key cylinder.	-

Criteria: The data monitor value is normal.

Result

Result	Go to
OK	A
NG (The data monitor item "Ignition" is an error.)	B
NG (The data monitor item "Key Unlock Warning SW" is an error.)	C

B → To lighting system (interior) (IG signal circuit) (Refer to LI - 23)

C → Go to Step 4.

A

Replacement of the main body ECM (network gateway computer) (Refer to PD - 23)

4	Unit inspection of the unlock warning switch ASSY

(1) Remove the unlock warning switch ASSY. (Refer to DL - 98)
(2) Perform the unit inspection of the unlock warning switch ASSY. (Refer to DL - 99)

NG → Replacement of the unlock warning switch ASSY (Refer to DL - 98)

OK

TD

5	Inspection of the wire harnesses and connectors (unlock warning switch ASSY - main body ECM (network gateway computer))

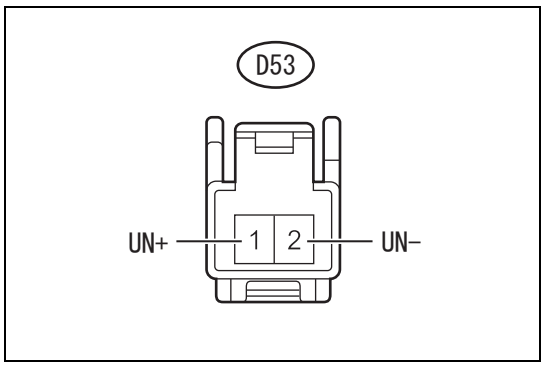

(1) Disconnect connector D5 of the main body ECM (network gateway computer).
(2) Measure the voltage and resistance between terminals.

Voltage

Inspection terminals	Inspection conditions	Standard value
D53-1 (UN+) - Chassis ground	Always	11 to 14 V

Resistance

Inspection terminals	Inspection conditions	Standard value
D53-2 (UN-) - D5-22 (KSW)	Always	Less than 1 Ω
D53-2 (UN-) - Chassis ground	Always	10 kΩ or more

NG → Repair or replacement of wiring harness or connector

OK

Replacement of the main body ECM (network gateway computer) (Refer to PD - 23)

6	Inspection of the wiring harnesses and the connectors (instrument panel junction block ASSY - combination meter ASSY)

(1) Disconnect the connector 3B of the instrument panel junction block ASSY.
(2) Disconnect connector D7 of the combination meter ASSY.
(3) Measure the resistance between the terminals.

Resistance

Inspection terminals	Inspection conditions	Standard value
3B-22 - D7-18 (ILL+)	Always	Less than 1 Ω
D7-40 (ES2) - Chassis ground	Always	Less than 1 Ω
3B-22 - chassis ground	Always	10 kΩ or more

NG → Repair or replacement of wiring harness or connector

OK

7	Unit inspection of the instrument panel junction block ASSY.

(1) Remove the main body ECM (network gateway computer) from the instrument panel junction block ASSY.
(2) Measure the resistance between the terminals.

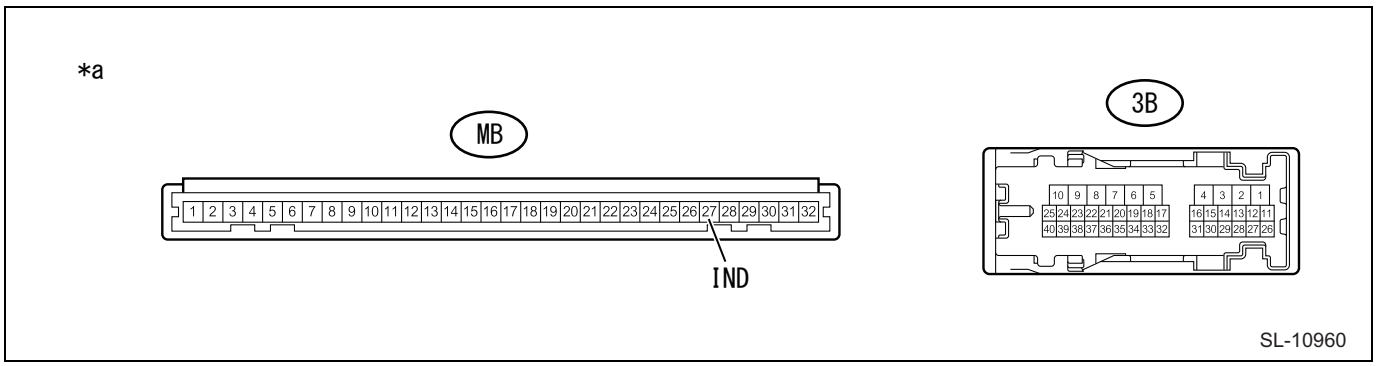

Resistance

Inspection terminals	Inspection conditions	Standard value
MB-27 (IND) - 3B-22	Always	Less than 1 Ω

Captions in illustration

*a	Connector not connected (Instrument panel junction block ASSY)	-	-

NG → Replacement of the instrument panel junction block ASSY

OK

8	Replacement of combination meter ASSY

(1) Replace with a new or normal combination meter ASSY. (Refer to ME - 63)
(2) When the immobilizer is set, check that the security indicator light flashes.
Criteria: The security indicator light flashes

NG → Replacement of the main body ECM (network gateway computer) (Refer to PD - 23)

OK

Complete (Faulty combination meter ASSY)

Auto alarm system

Parts location

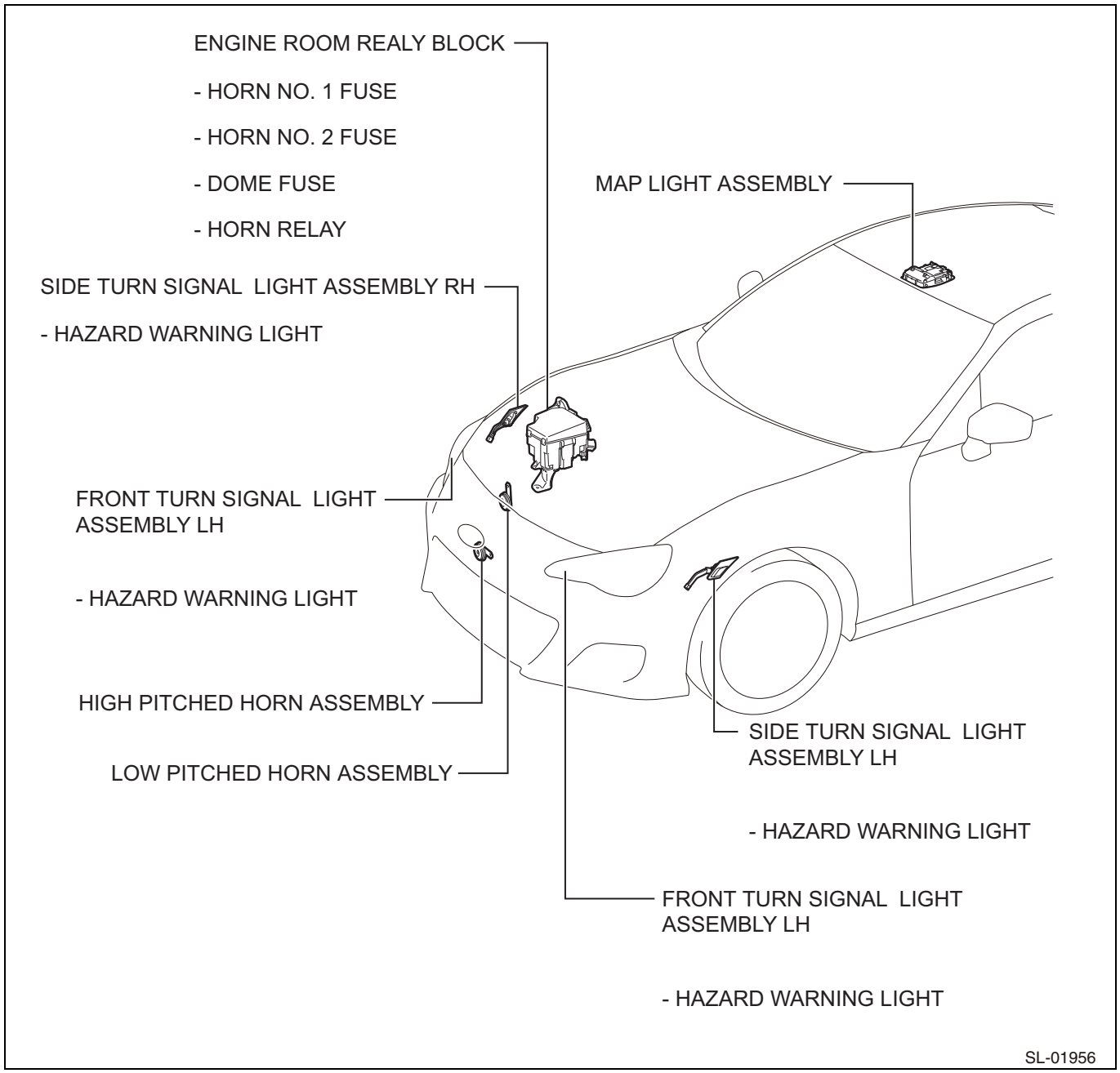

TD

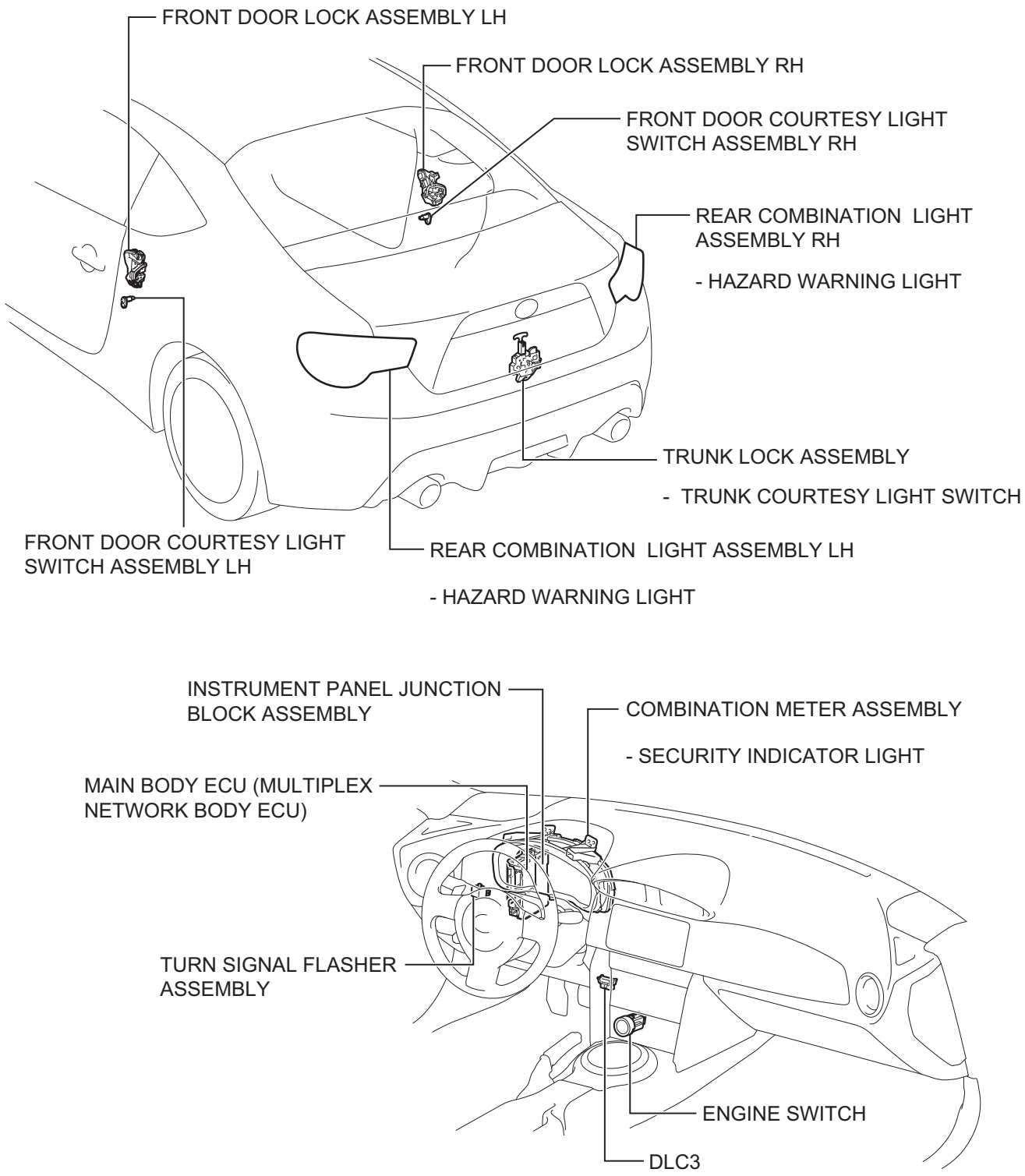
FRONT DOOR LOCK ASSEMBLY LH
FRONT DOOR LOCK ASSEMBLY RH
FRONT DOOR COURTESY LIGHT SWITCH ASSEMBLY RH
REAR COMBINATION LIGHT ASSEMBLY RH
- HAZARD WARNING LIGHT
TRUNK LOCK ASSEMBLY
- TRUNK COURTESY LIGHT SWITCH
FRONT DOOR COURTESY LIGHT SWITCH ASSEMBLY LH
REAR COMBINATION LIGHT ASSEMBLY LH
- HAZARD WARNING LIGHT
INSTRUMENT PANEL JUNCTION BLOCK ASSEMBLY
COMBINATION METER ASSEMBLY
- SECURITY INDICATOR LIGHT
MAIN BODY ECU (MULTIPLEX NETWORK BODY ECU)
TURN SIGNAL FLASHER ASSEMBLY
ENGINE SWITCH
DLC3
CERTIFICATION ECU (SMART KEY ECU ASSEMBLY)
REFER TO THE “REGISTRATION MANUAL FOR IMMOBILIZER” FOR ATTACHMENT POSITION.

SL-02711

Circuit figure

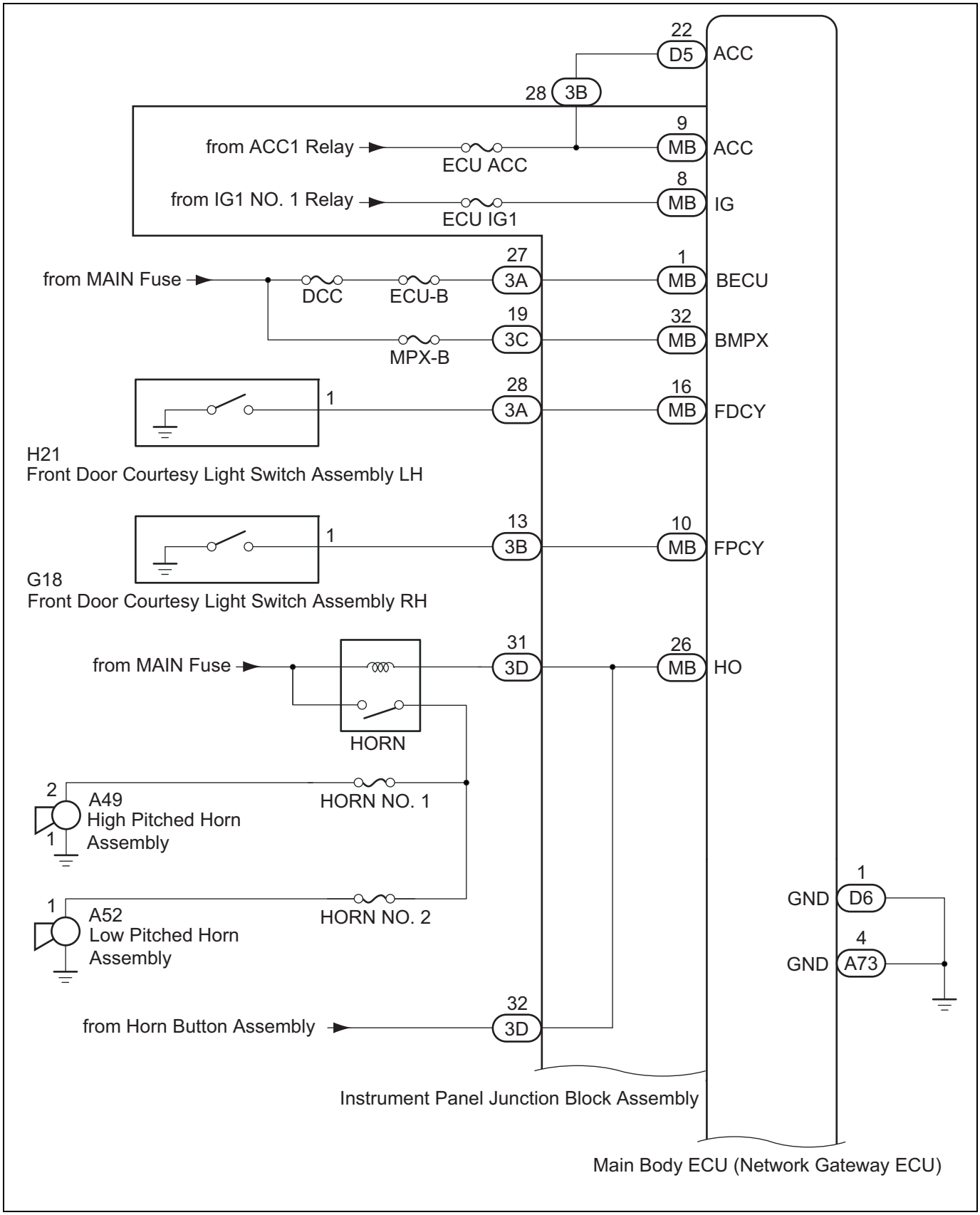

TD

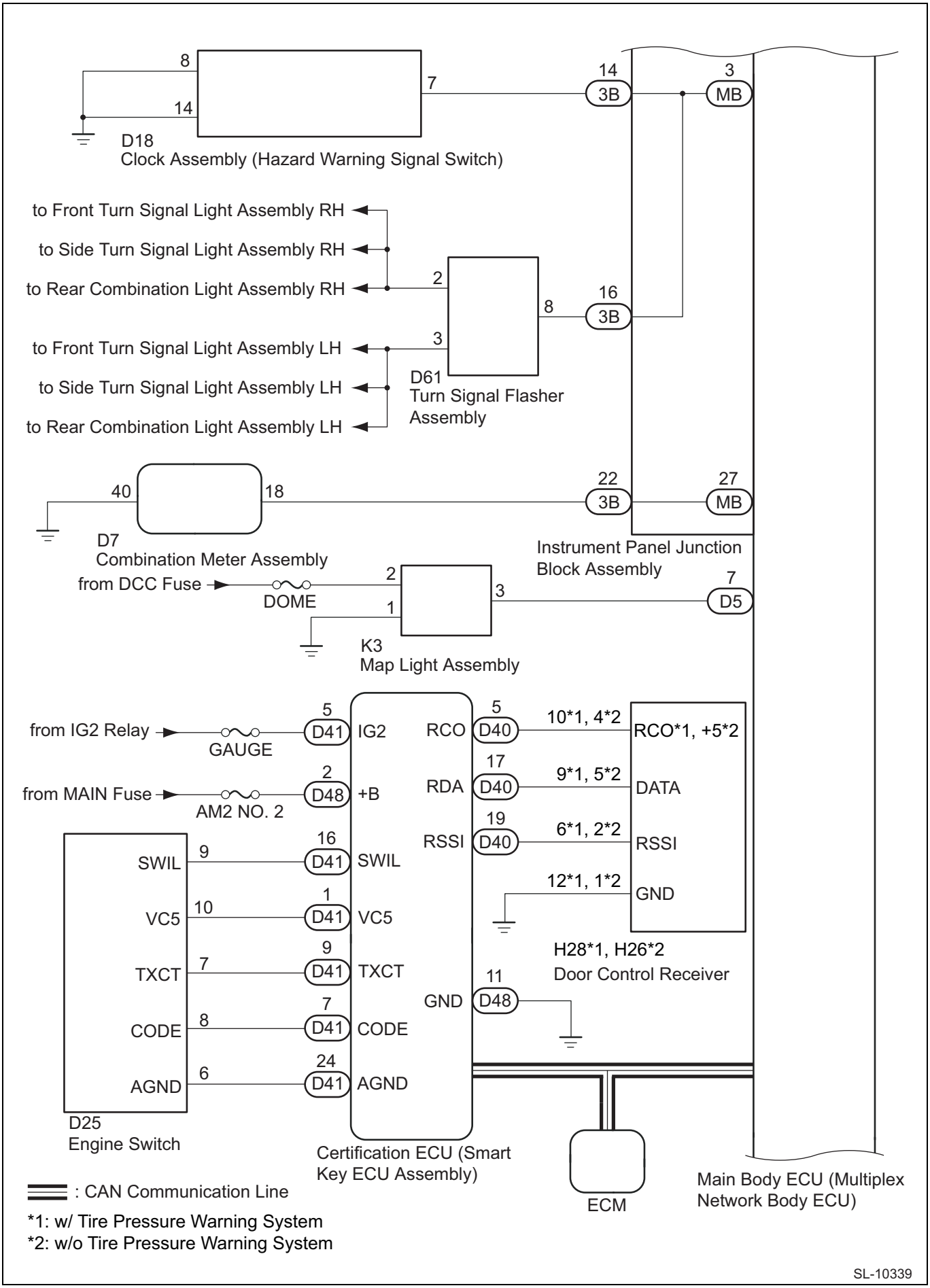
8
14
7
D18
Clock Assembly (Hazard Warning Signal Switch)
14
3B
3
MB
to Front Turn Signal Light Assembly RH
to Side Turn Signal Light Assembly RH
to Rear Combination Light Assembly RH
2
3
8
D61
Turn Signal Flasher Assembly
16
3B
to Front Turn Signal Light Assembly LH
to Side Turn Signal Light Assembly LH
to Rear Combination Light Assembly LH
40
18
D7
Combination Meter Assembly
22
3B
27
MB
Instrument Panel Junction Block Assembly
from DCC Fuse
DOME
2
1
3
K3
Map Light Assembly
7
D5
from IG2 Relay
GAUGE
5
D41
IG2
from MAIN Fuse
AM2 NO. 2
2
D48
+B
SWIL
9
16
D41
SWIL
VC5
10
1
D41
VC5
TXCT
7
9
D41
TXCT
CODE
8
7
D41
CODE
AGND
6
24
D41
AGND
D25
Engine Switch
RCO
5
D40
10*1, 4*2
RCO*1, +5*2
RDA
17
D40
9*1, 5*2
DATA
RSSI
19
D40
6*1, 2*2
RSSI
12*1, 1*2
GND
H28*1, H26*2
Door Control Receiver
GND
11
D48
Certification ECU (Smart Key ECU Assembly)
ECM
Main Body ECU (Multiplex Network Body ECU)
: CAN Communication Line
*1: w/ Tire Pressure Warning System
*2: w/o Tire Pressure Warning System
SL-10339

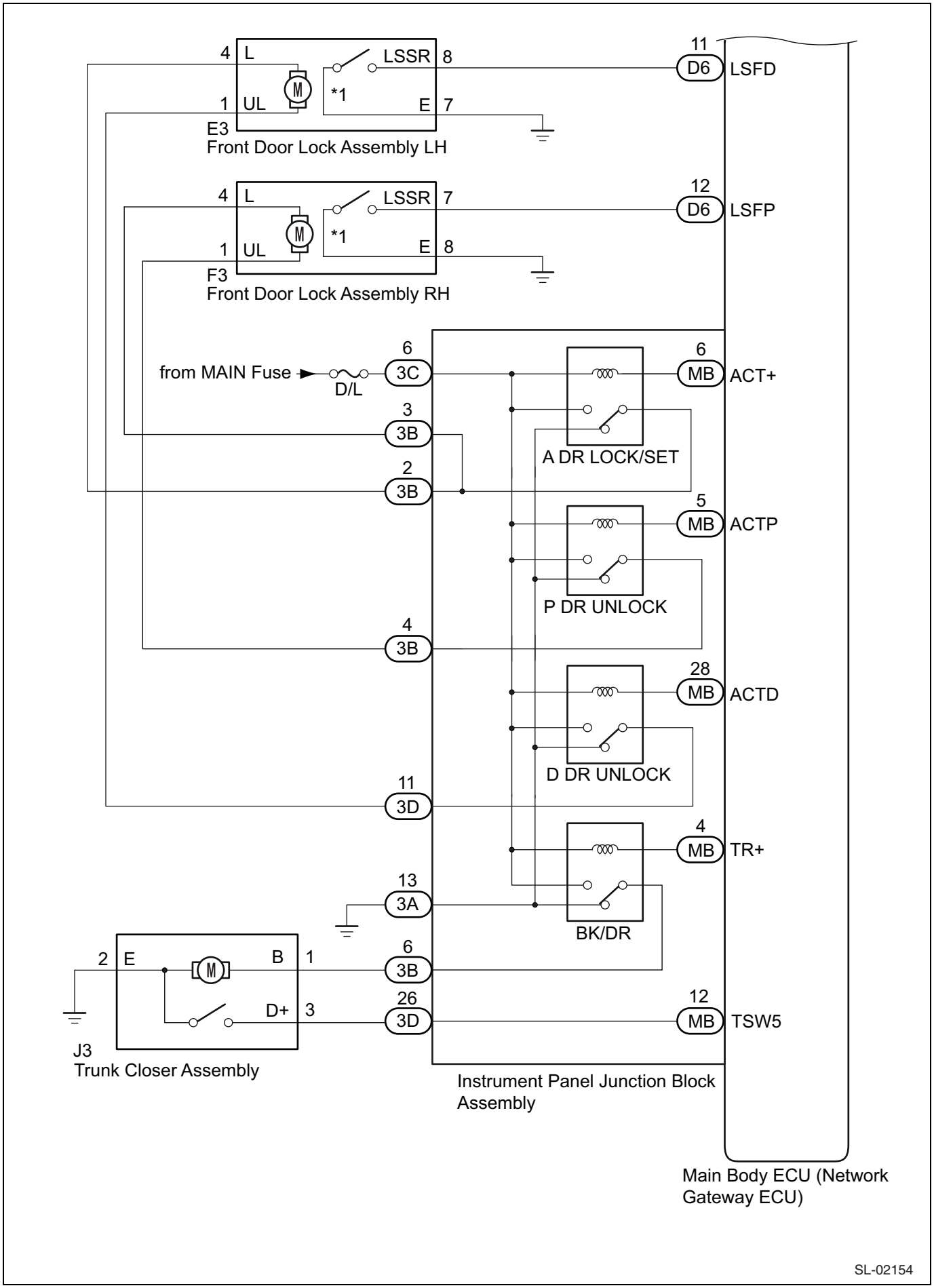
4 L
LSSR 8
1 UL
*1
E 7
E3
Front Door Lock Assembly LH
11
D6
LSFD
4 L
LSSR 7
1 UL
*1
E 8
F3
Front Door Lock Assembly RH
12
D6
LSFP
from MAIN Fuse
D/L
6
3C
6
MB
ACT+
3
3B
A DR LOCK/SET
2
3B
5
MB
ACTP
P DR UNLOCK
4
3B
28
MB
ACTD
D DR UNLOCK
11
3D
4
MB
TR+
13
3A
BK/DR
2 E
B 1
6
3B
D+ 3
26
3D
12
MB
TSW5
J3
Trunk Closer Assembly
Instrument Panel Junction Block Assembly
Main Body ECU (Network Gateway ECU)
SL-02154

List of communication line

Transmitter ECM (transmitter)	ECM reception (receiver)	Signal	Line
Collation ECM (smart key ECM ASSY)	Main body ECM (multiplex network body ECM)	Wireless door lock/unlock signal	CAN
	Main body ECM (multiplex network body ECM)	Engine switch signal	CAN
ECM	Main body ECM (multiplex network body ECM)	Engine speed signal	CAN

Description of functions

1. Summary of anti-theft system
   - Anti-theft system can be set by the wireless door lock or entry door lock operation.
   - When someone tries to forcibly unlock a door, or when any door or the trunk is opened while the system is activated, an alarm function operates.
   - While the alarm is activated, vehicle interior light illuminates and the hazard warning light blinks. At the same time, vehicle horn operates in order to prevent invasion or theft and alert the neighbors of the intrusion.
   - The alarm can be deactivated by unlocking the door with a transmitter.
   - Anti-theft system has an active arming mode. There are 4 levels in this mode: Disarmed state, Arming preparation state, Armed state, and Alarm sounding state.

   (1) Disarmed state:
      - The anti-theft system is not activated.

   (2) Arming preparation state:
      - Time till the system enters into Armed state.
      - The anti-theft system is not activated.

   (3) Armed state:
      - The anti-theft system is activated.

   (4) Alarm sounding state:
      - The alarm function is activated.

      Alarm operating time: Approx. 60 seconds

Alarm type and operating time

Alarm type	Hazard warning light	Blink
	Vehicle interior light	ON
	Vehicle horn	Operate (in approx. 0.4 second intervals)
Alarm operating time	Approx. 60 seconds	

2. Functions of the main parts

Conditions	Item
Security indicator light	Inform the driver of the status of anti-theft system.
Hazard warning light	Blinks when any invasion or theft by the unknown is detected.
Vehicle interior light	Lit when any invasion or theft by the unknown is detected.
Low pitch horn High pitch horn	Operates when any invasion or theft by the unknown is detected.
Door courtesy light switch	Detects door status (open/close).
Door lock position switch	Detects door status (lock/unlock).
Trunk courtesy switch	Detects trunk status (open/close).
Collation ECM (smart key ECM ASSY)	Receives wireless door lock/unlock signal.

3. Arming mode

   NOTE:

   In an arming mode, alarm control will start immediately after the wireless lock or entry lock operation is performed.

   (1) Arming mode:

      (a)The system works as shown in the figure, when the situation matches at least one of the following items.

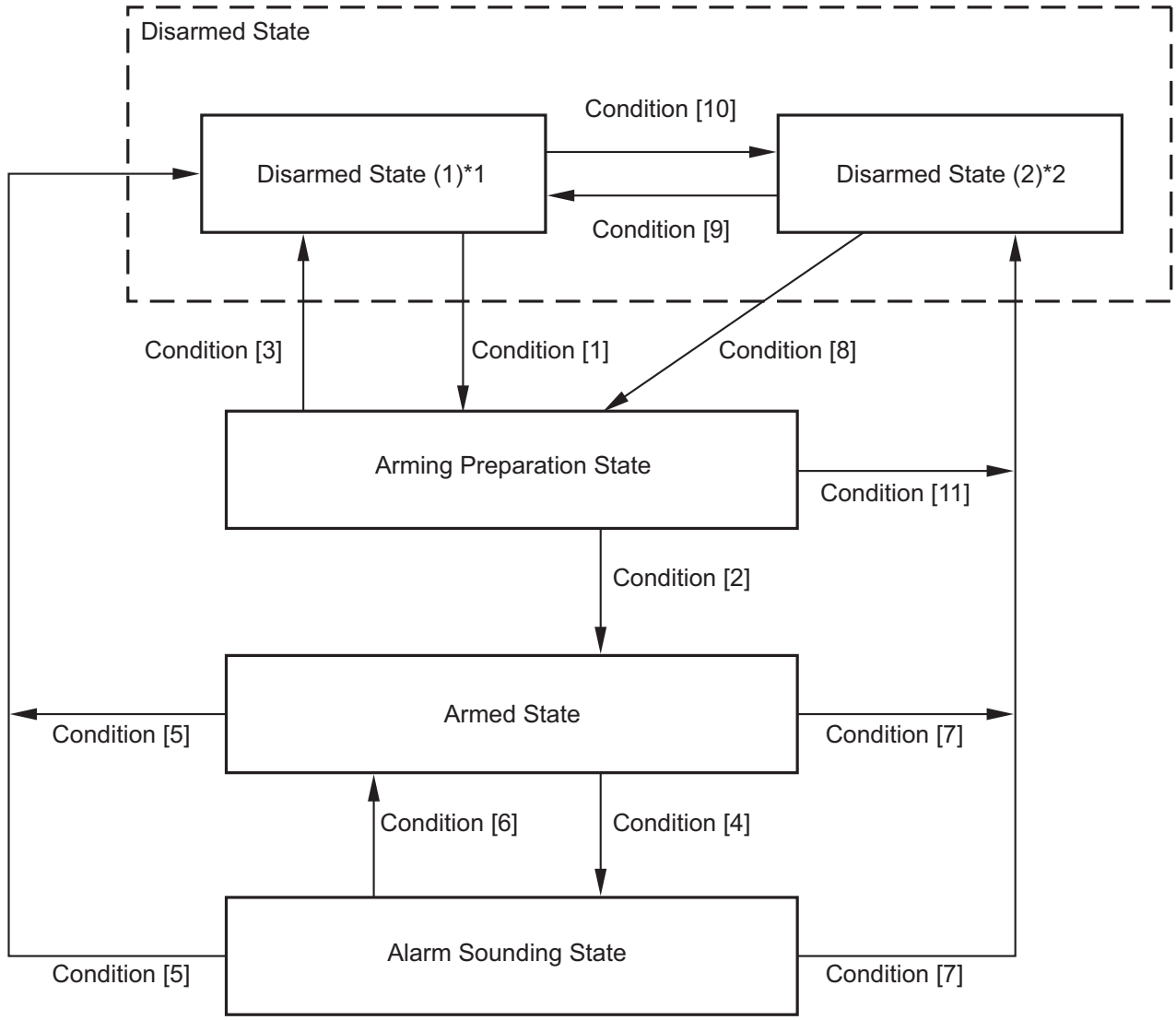

*1: Disarmed state 1 is the normal disarmed state

*2: Disarmed state 2 is set from either the disarmed state 1, arming preparation state, armed state or alarm sounding state

Conditions	Item
Condition (1)	All conditions are met: • IG OFF, ACC OFF, or the remote control engine start is operating. • All doors are closed. • The trunk is closed. • All doors are locked by wireless or entry lock operation. • When a door is open, all doors are locked and then all doors are closed.
Condition (2)	• Approx. 30 seconds have passed.

Conditions	Item
Condition (3)	Any of the following conditions must be satisfied: • All doors are unlocked by wireless or entry lock operation. • Any of the door is unlocked. • A door is open. • Push engine start OFF→ON • IG ON and the remote control engine start is stopping. • ACC ON and the remote control engine start is stopping. • Battery is reconnected.
Condition (4)	Any of the following conditions must be satisfied: • The closed trunk is opened. • Any of the door is opened while all doors were closed. • Any of the door is unlocked while all doors were locked. • The remote control engine start is stopping and the push start SW is not pressed for 5 seconds or more, and then the vehicle is turned to IG ON. • Battery is reconnected. (Other than when the remote control engine start is operating)
Condition (5)	Any of the following conditions must be satisfied: • Engine speed reaches 550 r/min or more, and this condition is kept for two seconds or more. • All doors are unlocked by wireless or entry lock operation. • Vehicle is turned to ACC ON or IG ON by the push start SW.
Condition (6)	Approx. after 60 seconds, the alarm stops, and the system returns to Armed state.
Condition (7)	The trunk is opened by wireless or entry trunk open operation.
Condition (8)	The open trunk is closed.
Condition (9)	Any of the following conditions must be satisfied: • Any of the door is unlocked while all doors were locked. • A door is open. • Press the engine switch. • ACC ON or IG ON (Remote control engine start is stopping) • All doors are unlocked by wireless or entry lock operation. • Battery is reconnected.
Condition (10)	Any of the following conditions must be satisfied: • IG OFF and ACC OFF or the remote control engine start is operating. • When all doors are closed but the trunk is open, all doors are locked by wireless or entry lock operation. • When a door is open and unlocked, all doors are locked and then all doors are closed.
Condition (11)	Any of the following conditions must be satisfied: • The trunk is closed. • The trunk is opened by wireless or entry trunk open operation.

TD

4. Security Indicator light output
   (1) Main body ECM (multiplex network body ECM) outputs signals based on the status of anti-theft system in order to turn on the security indicator light. However, the actual lighting status of the security indicator light may differ from output signals of main body ECM (multiplex network body ECM).

Output

Status of anti-theft system	Security indicator light
	Actual blinking state
Disarmed state (1), (2)	Blink
Arming preparation state	ON
Armed state	Blink
Alarm sounding state	ON

Blinking cycle

Time	Security indicator light
0.125 seconds	ON
1.875 seconds	Off

How to troubleshoot

NOTE:

- Use the following procedure to troubleshoot the theft deterrent system.
- Using the SSM4.
- The troubleshooting procedures for the theft deterrent system are based on the premise that the door lock control system, wireless door lock control system, lighting system, horn system, engine immobiliser system and entry and start system are operating normally. Check these systems first before troubleshooting the theft deterrent system.

1	VEHICLE BROUGHT TO WORKSHOP

NEXT

2	CUSTOMER PROBLEM ANALYSIS

(1) Interview the customer to confirm the trouble.

NEXT

3	CAN communication system check

(1) Check CAN communication system. (Refer to NW - 30)
Result

Result	Proceed to
Functioning properly	A
Not functioning properly	B

B → Repair according to the check of CAN communication system (Refer to NW - 30)

A

4	SYMPTOM SIMULATION

(1) Symptom simulation.

NEXT

5	PROBLEM SYMPTOMS TABLE

(1) Refer to Problem Symptoms Table. (See page TD - 325)
Result

Result	Proceed to
Fault is not listed in Problem Symptoms Table	A
Fault is listed in Problem Symptoms Table	B

B → Go to step 7

A

6	PERFORM TROUBLESHOOTING ACCORDING TO MALFUNCTION SYMPTOM

(1) Description of system functions (See page TD - 320)
(2) ECM terminal arrangement. (See page TD - 326)

7	ADJUST, REPAIR OR REPLACE

NEXT

8	CONFIRMATION TEST

NEXT

END

customize function

1. CUSTOMIZE THEFT DETERRENT SYSTEM

NOTE:

The following items can be customized.

CAUTION:

- When the customer requests a change in a function, first make sure that the function can be customized.
- Be sure to make a note of the current settings before customizing.
- When troubleshooting a function, first make sure that the function is set to the default setting.

(1) Customizing with the SSM4

(a) Connect the SSM4 to the DLC3.

(b) Turn the engine switch on (IG).

(c) Turn the SSM4 on.

(d) Enter the following menus: [Body Control] →[Customize]

(e) Select the setting by referring to the table below.

Security

Display	Default	Content	Setting	Relevant ECU
[Security System]	No	This function operates the theft deterrent system	ON or OFF	Main Body ECU (Multiplex Network Body ECU)

(2) Theft deterrent system cancel function (manual operation)

(a) Performing theft deterrent system cancellation setting allows the theft deterrent system to be stopped.

(b) Configuring theft deterrent system cancellation setting.

1. Set the vehicle in the following state. Disarm the theft deterrent system.
2. After setting the vehicle in the above state, perform the following operations.
3. Close and lock all doors and turn the ignition switch to ON.
4. When the above operations are complete, push down and hold the unlock switch on the door control switch, open the driver side door and hold it for 10 seconds.
5. When the above operations are complete, the horn sounds twice and "AL oF" appears on the multi-display in the combination meter assembly, informing the operator that theft deterrent system cancellation setting is complete.

(c) Returning the theft deterrent system from canceled to normal mode.

1. Perform theft deterrent system cancellation setting again.
2. When the above operations are complete, the horn sounds once and "AL on" appears on the multi-display in the combination meter assembly, informing the operator that normal mode setting has been resumed.

NOTE:

- Each time the cancellation is performed manually, the state changes between canceled and active alternately.
- When changing from active to canceled state, the horn sounds twice and "AL OF" appears on the multi-display in the combination meter assembly, and when changing from canceled to active state, the horn sounds once and "AL ON" appears on the multi-display in the combination meter assembly, in order to inform the operator of the alarm status.

Symptom table

NOTE:

- Use the following table to identify the cause of the symptom. If multiple items are listed as causes, they are listed in the [Possible causes] column in descending order of probability. Check each symptom by inspecting the possible causes in the order listed in the table. Replace the parts as required.
- Check fuse and relay before inspecting the possible causes listed in the following table.

Anti-theft system

Symptoms	Possible cause	Reference
The anti-theft system cannot be set.	Refer to "Security indicator light does not flash"	TD - 269
	Refer to "ECM power supply circuit"	TD - 330
	Door courtesy switch circuit	
	Refer to "Trunk courtesy switch circuit"	
	Front door lock ASSY LH/RH	
	Trunk lock ASSY	
	Collation ECM (smart key ECM ASSY)	-
	If the trouble is not solved even after checking the above items and confirming all parts are operating normally, replace the main body ECM (multiplex network body ECM).	-
Security indicator light does not flash while the anti-theft system is set.	Refer to "Security indicator light does not flash"	TD - 269
Alarm sounding state cannot be cancelled even after starting the engine.	Entry & start system (start function)	TD - 146
	Collation ECM (smart key ECM ASSY)	-
	If the trouble is not solved even after checking the above items and confirming all parts are operating normally, replace the main body ECM (multiplex network body ECM).	-
The anti-theft system can be set even though the door is open.	Door courtesy switch circuit	
	Trunk courtesy switch circuit	
	If the trouble is not solved even after checking the above items and confirming all parts are operating normally, replace the main body ECM (multiplex network body ECM).	-
Vehicle horn does not operate while the anti-theft system is activated.	Refer to "Horn circuit"	TD - 328
Hazard warning light does not flash while the anti-theft system is activated.	Wiring harness or connector	-
	Combination meter ASSY	-
	If the trouble is not solved even after checking the above items and confirming all parts are operating normally, replace the main body ECM (multiplex network body ECM).	-
Hazard warning light flashes while the anti-theft system is not activated.	Wiring harness or connector	-
	Combination meter ASSY	-
	If the trouble is not solved even after checking the above items and confirming all parts are operating normally, replace the main body ECM (multiplex network body ECM).	-
Vehicle interior light does not illuminate while the anti-theft system is activated.	Vehicle interior light circuit	
	If the trouble is not solved even after checking the above items and confirming all parts are operating normally, replace the main body ECM (multiplex network body ECM).	-
Vehicle interior light illuminates while the anti-theft system is not activated.	Vehicle interior light circuit	
	If the trouble is not solved even after checking the above items and confirming all parts are operating normally, replace the main body ECM (multiplex network body ECM).	-

ECM terminal arrangement

1. Inspection of instrument panel junction block ASSY and main body ECM (multiplex network body ECM)

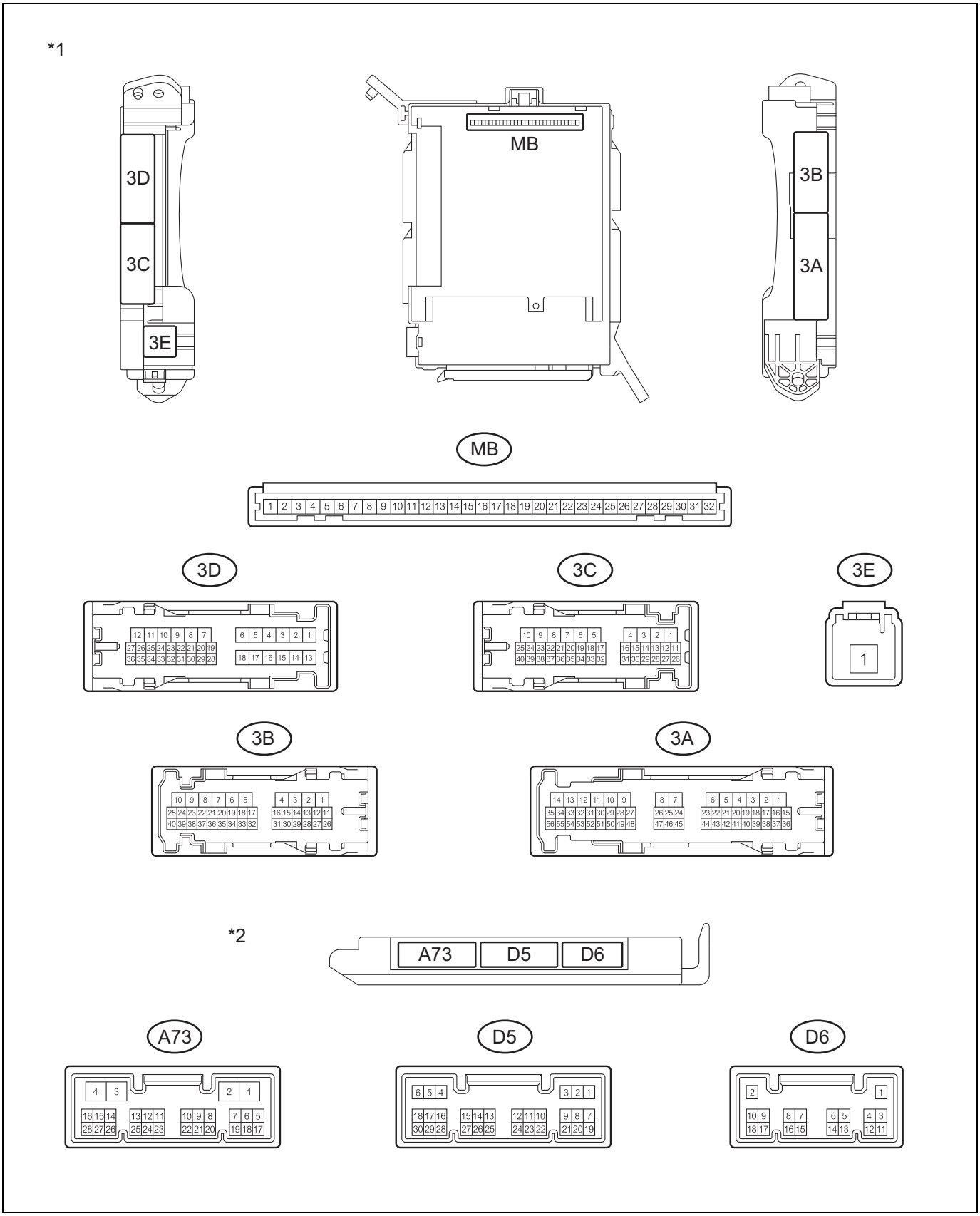

Captions in illustration

*1	Instrument panel junction block ASSY	*2	Main body ECM (multiplex network body ECM)

(1) Remove the main body ECM (multiplex network body ECM) from the instrument panel junction block ASSY.

(2) Measure the voltage and resistance according to the following table.

Terminal No. (symbol)	Terminal description	Conditions	Specified condition
MB-1 - chassis ground	Battery power supply	Always	1 Ωor less
MB-8 - Chassis ground	Engine switch power supply	Engine switch is ON (IG)	11 to 14V
		The engine switch is OFF.	1 V or less
MB-9 - Chassis ground	ACC power supply	ACC	11 to 14V
		The engine switch is OFF.	1 V or less
MB-11 - chassis ground	Ground	Always	11 to 14V
MB-32 - chassis ground	Battery power supply	Always	11 to 14V
D6-1 - Chassis ground	Ground	Always	1 Ωor less
A73-4 - chassis ground	Ground	Always	1 Ωor less

If you cannot get the specified result, there could be a problem in the wiring harnesses.

(3) Install the main body ECM (multiplex network body ECM) on the instrument panel junction block ASSY.

(4) Refer to the value shown in table below and measure the voltage and waveform.

Terminal No. (symbol)	Terminal description	Conditions	Specified condition
3A-28 - chassis ground	Driver's side courtesy light switch	Driver's door is open.	1 V or less
		Driver's door is closed	Pulse generation
3B-13 - chassis ground	Passenger's side courtesy light switch	The passenger's door is open.	1 V or less
		The passenger's door is closed.	Pulse generation
3B-22 - chassis ground	Security indicator light signal	Security indicator light illuminates (only for 30 (5) seconds in Alarm sounding state (flashes when the system is in Armed state))	3 to 10V
3D-26 - chassis ground	Trunk courtesy light switch	The trunk is open.	1 V or less
		Change the power mode to IG OFF, close the door, and close the trunk.	11 to 14V
3D-31 - chassis ground	Vehicle horn signal	Vehicle horn operates (Anti-theft system is in Alarm sounding state)	Pulse generation
		Vehicle horn does not operate (Anti-theft system is in Alarm sounding state)	11 to 14V
3B-2 - chassis ground	Door lock motor lock drive output (driver's side)	Driver's door control switch is not pressed	1 V or less
		Driver's door control switch is not pressed to lock side	11 to 14V
3B-3 - chassis ground	Door lock motor lock drive output (passenger's side)	Driver's door control switch is not pressed	1 V or less
		Driver's door control switch is not pressed to lock side	11 to 14V
3B-1 - chassis ground	Door lock motor unlock drive output (driver's side)	Driver's door control switch is not pressed	1 V or less
		Driver's door control switch is not pressed to unlock side	11 to 14V
3B-4 - chassis ground	Door lock motor unlock drive output (passenger's side)	Driver's door control switch is not pressed	1 V or less
		Driver's door control switch is not pressed to unlock side	11 to 14V
D6-11 - chassis ground	Driver's door unlock detection switch input	The driver's door is locked.	1 V or less
		Change the power mode to IG OFF, close all doors, and lock the driver's door.	Pulse generation
D6-12 - chassis ground	Passenger's door unlock detection switch input	Passenger's door is unlocked	1 V or less
		Change the power mode to IG OFF, close all doors, and lock the passenger's door.	Pulse generation

DIAGNOSIS SYSTEM

1. Description of functions
   (1) The ECU stores trouble codes if vehicle malfunctions occur.
   (2) The diagnostic system allows for reading of the trouble codes from the DLC3.
   (3) Use the SSM4 to check and solve the problem.
2. CHECK DLC3
   (1) Check the DLC3.

Data monitor / active test

1. Data monitor

   NOTE:

   By using the SSM4 and reading [Data monitor], you can read the statuses and values for switches, sensors, actuators, and other items without removing parts. Because the non-intrusive inspection allows you to read the intermittent statuses or signals without interfering with parts or lines, it is very convenient. Diagnostic time can be saved by reading the [Data monitor] information at the initial stage of the troubleshooting.

   (1) Connect the SSM4 to the DLC3.
   (2) Turn the ignition switch to ON.
   (3) Turn on the SSM4.
   (4) Enter the following menus: [Body Control] →[Data monitor]

Main body

Item Name	Description/display range	Normal value	Remarks
[Security System]	Anti-theft system / OFF or ON	Customization status is displayed.	-
[D Door Courtesy]	Front RH door courtesy light switch signal / OFF or ON	OFF: Driver's door is closed ON: Driver's door is open.	-
[D Door Lock Pos]	Front RH door lock position switch signal / OFF or ON	OFF: The driver's door is locked. ON: Driver's door is locked.	-
[P Door Courtesy]	Front LH door courtesy light switch signal / OFF or ON	OFF: The passenger's door is closed. ON: The passenger's door is open.	-
[P Door Lock Pos]	Front LH door lock position switch signal / OFF or ON	OFF: Passenger's door is locked ON: Passenger's door is unlocked	-
[Luggage Courtesy SW]	Trunk courtesy switch / OFF or ON	OFF: The trunk is closed. ON: The trunk is open.	-
[Ignition]	Engine switch condition / OFF or ON	OFF: IG OFF ON: IG ON	-
[ACC SW]	Engine switch condition / OFF or ON	OFF: IG OFF ON: ACC ON	-

2. Active test

   NOTE:

   By performing an [Active Test] with SSM4, you can operate relays, VSV, actuators and other devices without removing any parts. This non-intrusive inspection is very useful because intermittent operation is possible without disturbing any parts or wiring. By performing an [Active Test] at an initial phase of troubleshooting, you can save time for diagnosis. [Data monitor] can be displayed during [Active Test].

   (1) Connect the SSM4 to the DLC3.
   (2) Turn the ignition switch to ON.
   (3) Turn on the SSM4.
   (4) Enter the following menus: [Body Control] →[Active Test]
   (5) Based on the SSM4 display contents, perform an [Active Test].

Main body

Item Name	Description/display range	Normal value	Remarks
[Security Indicator]	Security indicator light	ON/OFF	-
[Horn Output]	Vehicle horn	ON/OFF	-

Horn circuit

Circuit description

When the status of anti-theft system changes from Armed state to Alarm sounding state, the main body ECM (multiplex network body ECM) outputs the signal in order to operate the horn in 0.4 second intervals.

Circuit figure

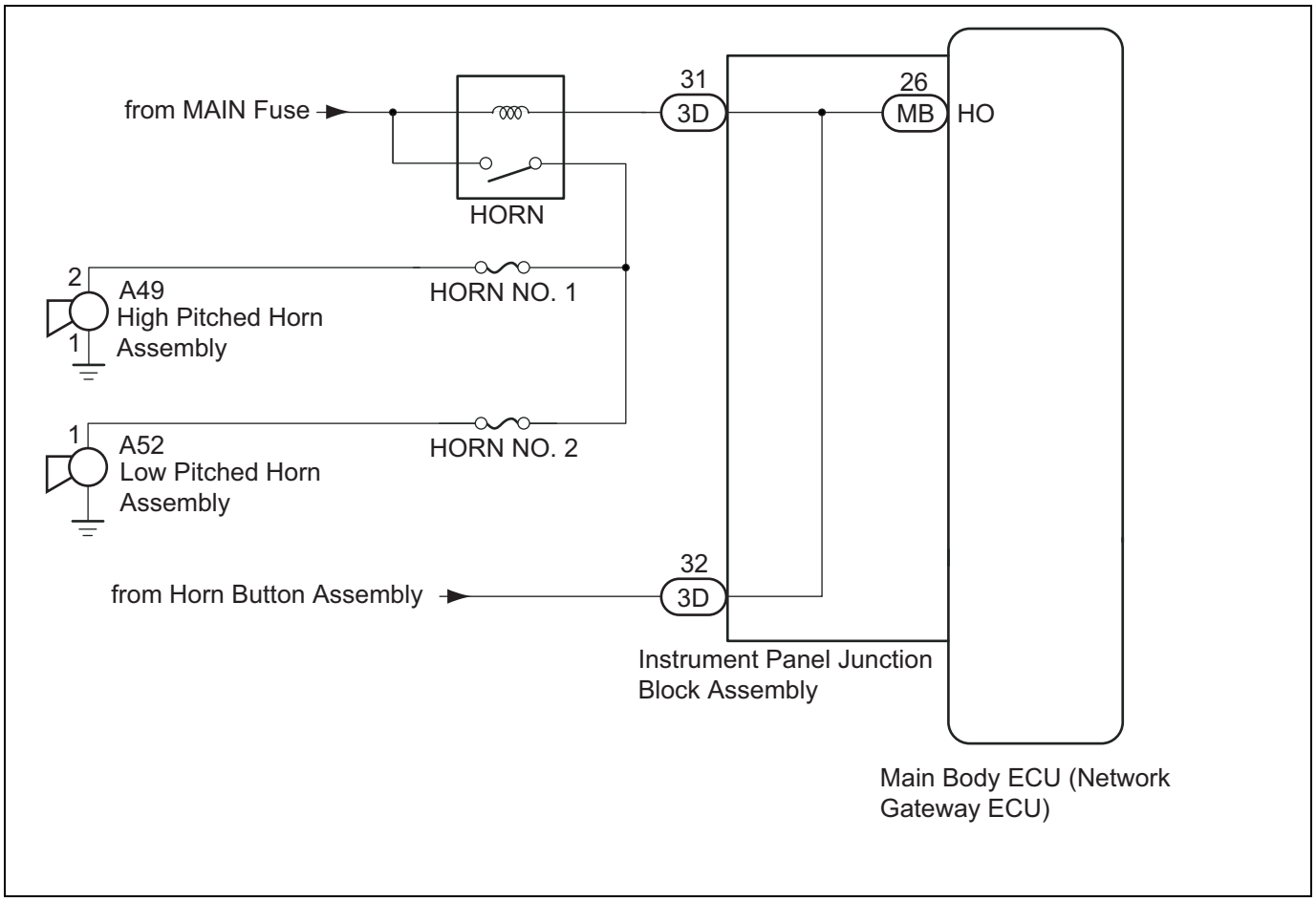

Inspection steps

CAUTION:

Before performing the following inspection steps, check the fuses related to this system.

1	Unit inspection of horn

(1) Press the horn switch and check if the vehicle horn operates.

Result

Result	Go to
Vehicle horn operates	A
Vehicle horn does not operate	B

B → To Horn system

A

2	Using SSM4, perform an [Active Test].

(1) Connect the SSM4 to the DLC3.
(2) Turn the ignition switch to ON.
(3) Turn on the SSM4.
(4) Input the following menus: [Body Control] →[Active Test]
(5) Based on the SSM4 display contents, perform an [Active Test].

Main Body

Tester display	Tested parts	Control range	Notes for diagnosis
[Vehicle Horn]	Vehicle Horns	ON/OFF	-

Criteria: Vehicle horn operates and stops properly via SSM4.

NG → Go to Step 3.

OK

Replacement of main body ECM (multiplex network body ECM)

3	Unit inspection of the instrument panel junction block ASSY.

(1) Remove the instrument panel junction block ASSY.
(2) Remove the main body ECM (multiplex network body ECM) from the instrument panel junction block ASSY.
(3) Measure the resistance according to the following table.

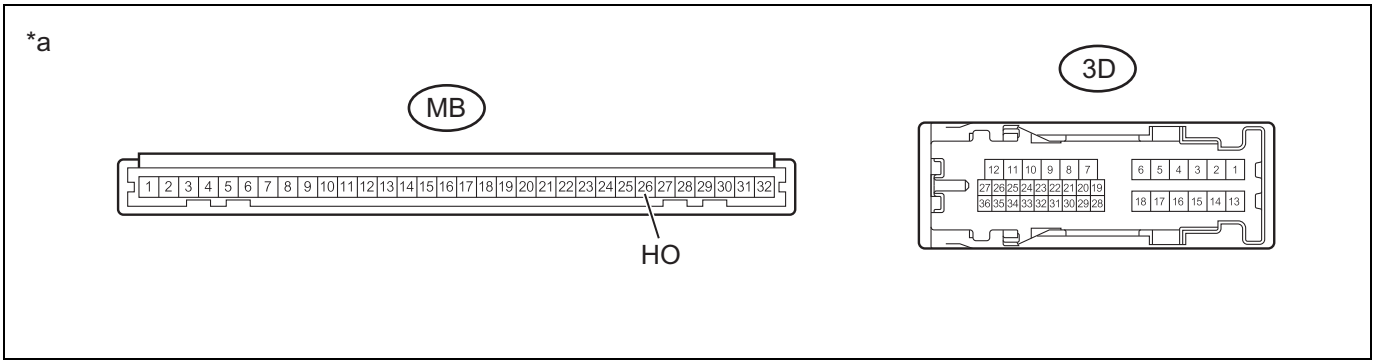

Resistance

Inspection terminals	Inspection conditions	Standard value
MB-26 - 3D-31	Always	1 Ωor less
MB-26 - 3D-32	Always	1 Ωor less

Captions in illustration

*a	Connector not connected (Instrument panel junction block ASSY)	-	-

NG → Replacement of the instrument panel junction block ASSY

OK

Replacement of main body ECM (multiplex network body ECM)

ECM power supply circuit

Circuit description

This circuit is for supplying the power required to operate the main body ECM (multiplex network body ECM).

Circuit figure

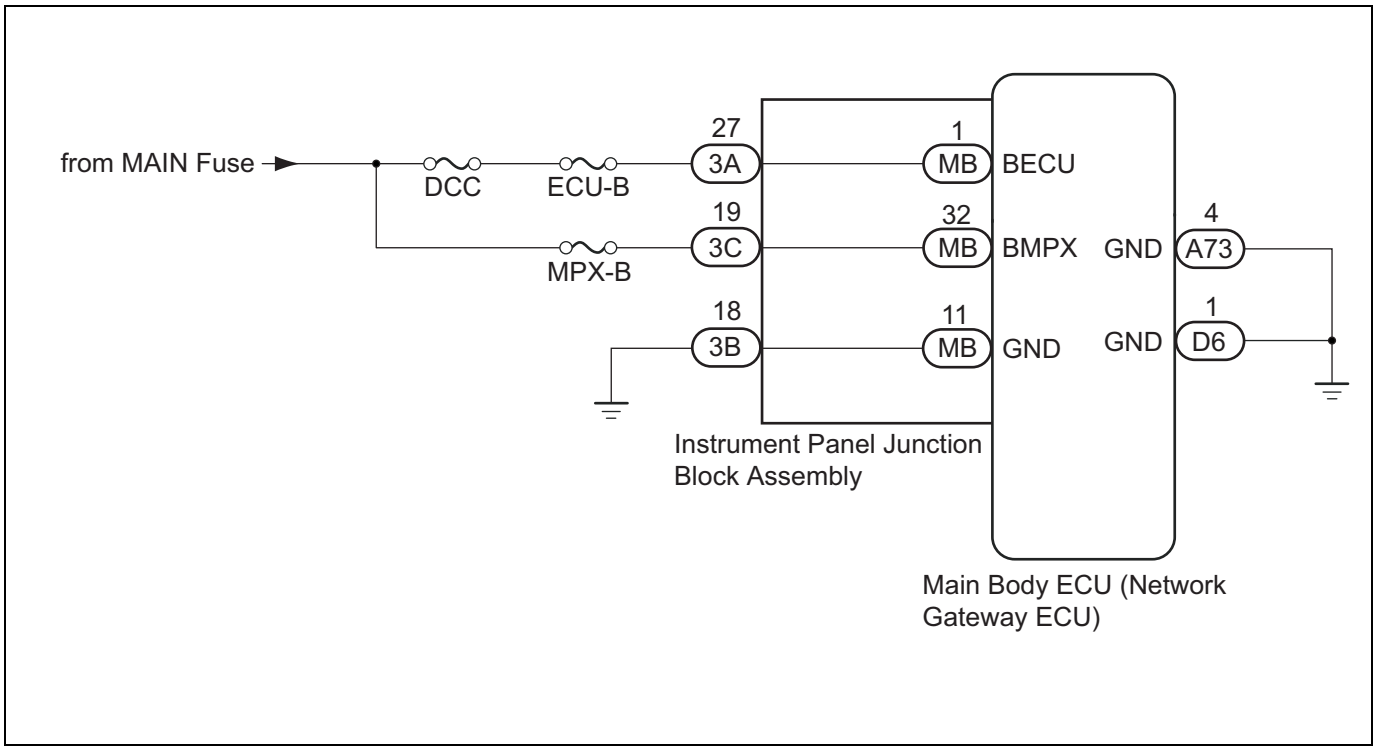

TD

Inspection steps

CAUTION:

Before performing the following inspection steps, check the fuses related to this system.

1	Confirming harness and connector (Battery - instrument panel junction block ASSY)

(1) Disconnect instrument panel junction block ASSY connectors 3A and 3C.

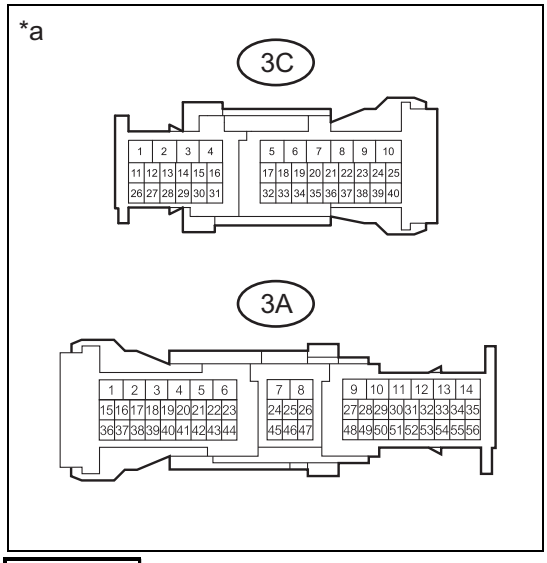

(2) Measure the voltage according to the following table.

Captions in illustration

*a	Connector not connected (Instrument panel junction block ASSY)

Voltage

Inspection terminals	Inspection conditions	Standard value
3A-27 - chassis ground	Always	11 to 14 V
3C-19 - Chassis ground	Always	11 to 14 V

NG → Repair or replace the harnesses or connectors.

OK

2	Confirming harness and connector (Instrument panel junction block - Chassis ground)

(1) Disconnect instrument panel junction block ASSY connector 3B.

(2) Disconnect main body ECM (multiplex network body ECM) connectors A73 and D6.
(3) Measure the resistance according to the following table.

Resistance

Inspection terminals	Inspection conditions	Standard value
3B-18 - chassis ground	Always	1 Ωor less
A73-4 - chassis ground	Always	1 Ωor less
D6-1 - Chassis ground	Always	1 Ωor less

NG → Repair or replace the harnesses or connectors.

OK

3	Unit inspection of instrument panel junction block ASSY

TD

(1) Remove the instrument panel junction block ASSY.
(2) Remove the main body ECM (multiplex network body ECM) from the instrument panel junction block ASSY.

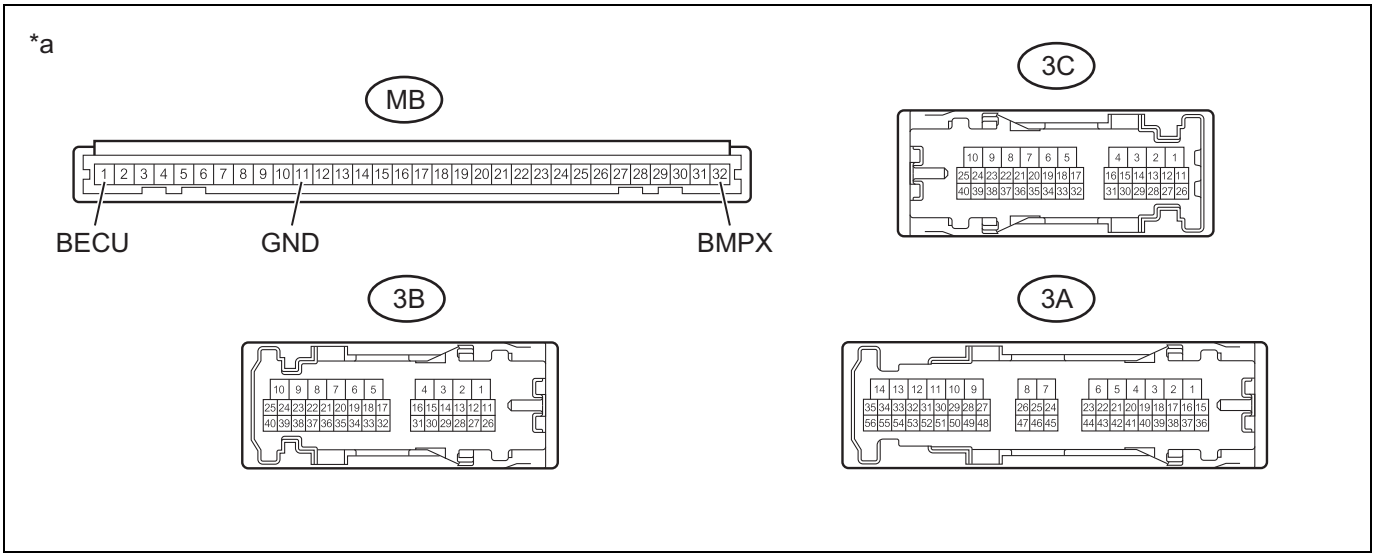

Captions in illustration

*a	Connector not connected (Instrument panel junction block ASSY)	-	-

(3) Measure the resistance according to the following table.

Resistance

Inspection terminals	Inspection conditions	Standard value
3A-27 - MB-1	Always	1 Ωor less
3C-19 - MB-32	Always	1 Ωor less
3B-18 - MB-11	Always	1 Ωor less

NG → Replacement of the instrument panel junction block ASSY

OK

Go to the next item under "Possible causes" in the "Symptom table" (Refer to TD - 325)

Electrical oscillator key (for front floor)

Exploded view

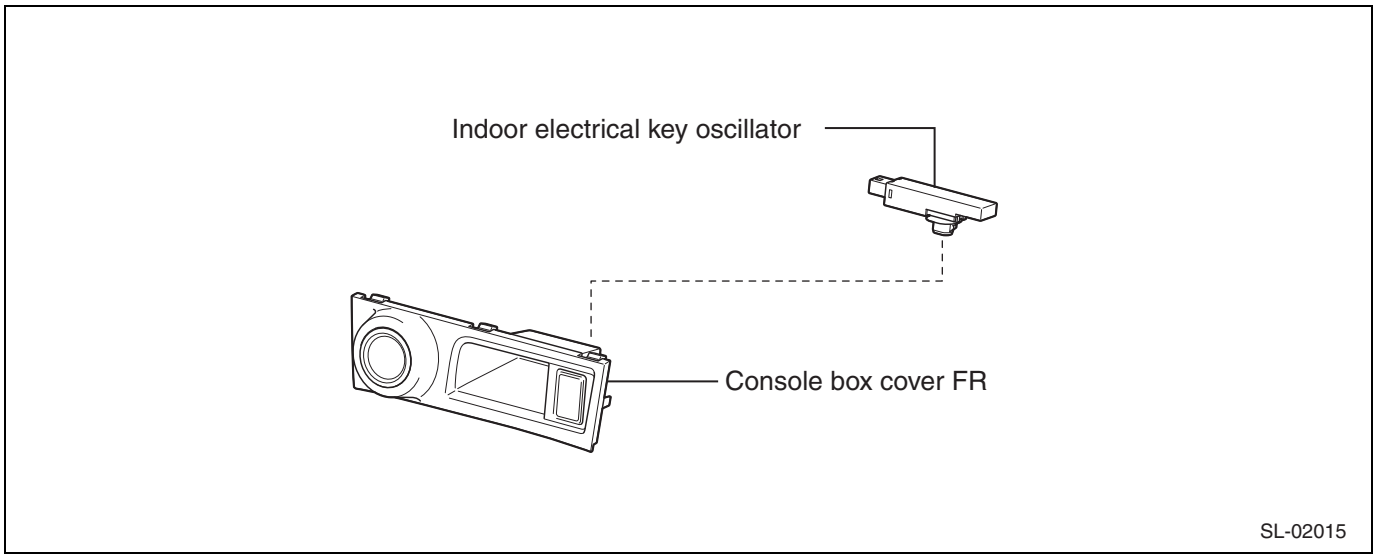

TD

Removal

1. Removal of console box cover FR (Refer to IT - 33)

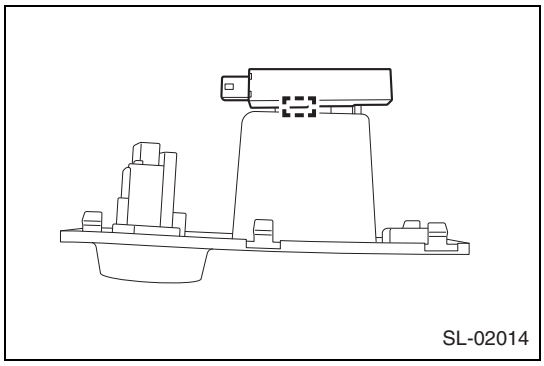

2. Removal of indoor electrical key oscillator
   (1) Release the clamp and remove the indoor electrical key oscillator.

Installation

1. Installation of indoor electrical key oscillator
   (1) Engage the clamp and install the indoor electrical key oscillator.
2. Installation of console cover FR (Refer to IT - 39)

Electrical oscillator key (for rear floor)

Exploded view

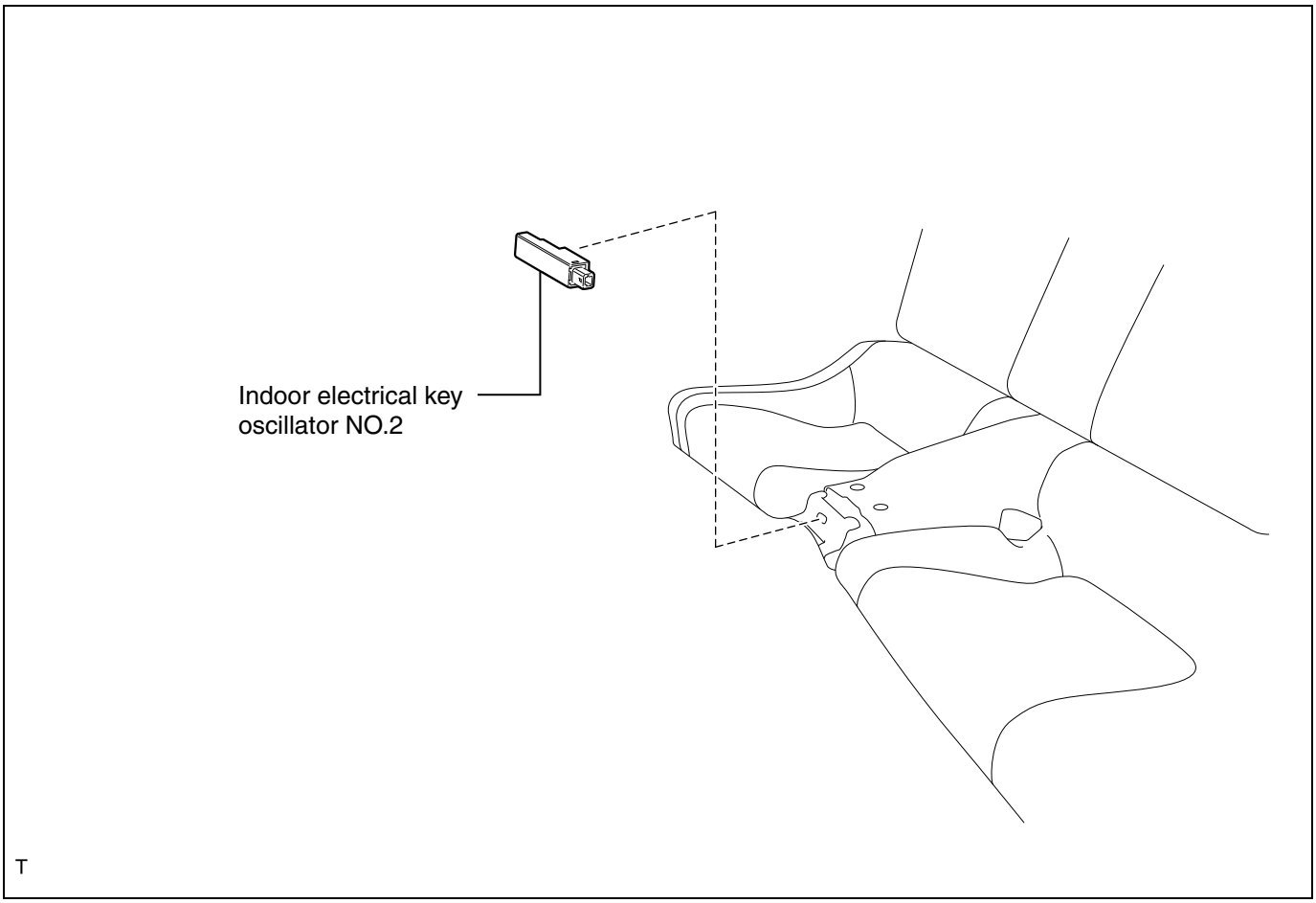

TD

Removal

WARNING:

The following service operations include the works which may affect the SRS airbag system. Always confirm the precautions for the SRS airbag system. (Refer to RS - 5)

1. Removal of console box ASSY (Refer to IT - 33)

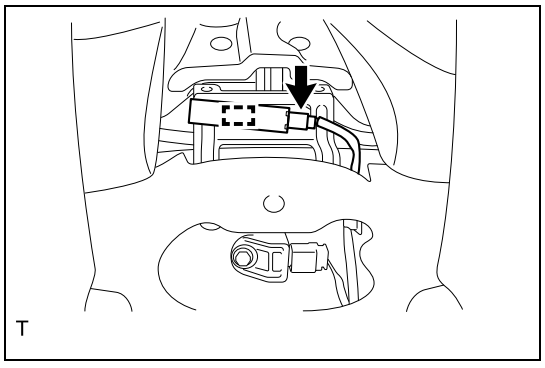

2. Removal of indoor electrical key oscillator No.2
   (1) Disconnect the connector.
   (2) Release the clamp and remove the indoor electrical key oscillator No.2.

Installation

1. Installation of indoor electrical key oscillator No.2
   (1) Engage the clamp and install the indoor electrical key oscillator No.2.
   (2) Connect the connector.
2. Installation of console box ASSY (Refer to IT - 38)

Electrical oscillator key (for the trunk room)

Exploded view

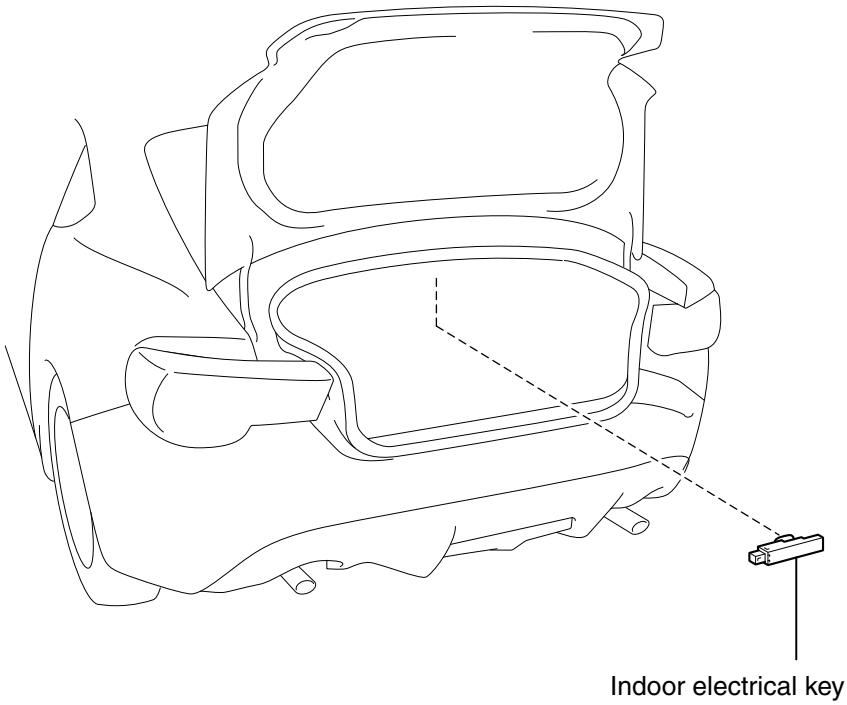

T

Removal

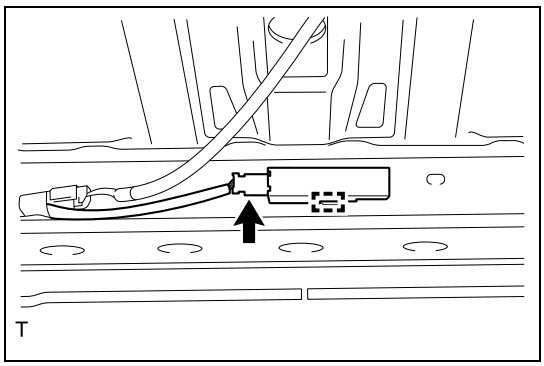

T

1. Removal of indoor electrical key oscillator No.3
   (1) Disconnect the connector.
   (2) Release the clamp and remove the indoor electrical key oscillator No.3.

Installation

1. Installation of indoor electrical key oscillator No.3
   (1) Engage the clamp and install the indoor electrical key oscillator No.3.
   (2) Connect the connector.

Electrical oscillator key (for outside of the trunk room)

Exploded view

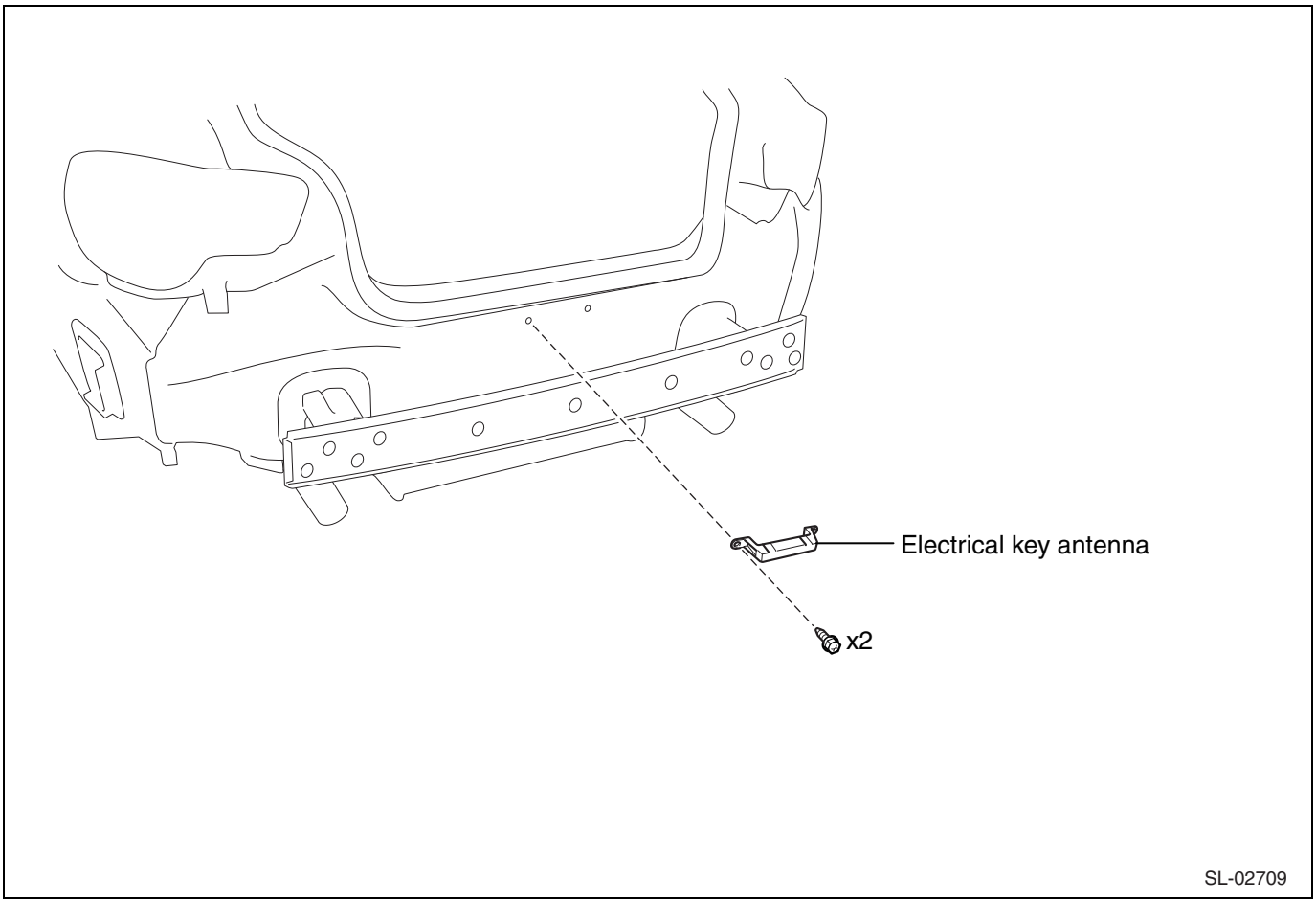

TD

Removal

1. Removal of the rear bumper cover (Refer to ET - 19)

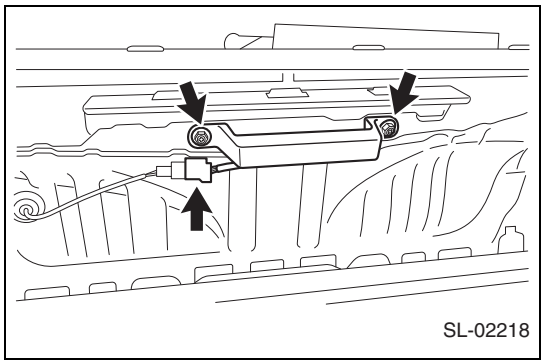

2. Removal of electrical key antenna
   (1) Disconnect the connector.
   (2) Remove the 2 screws and remove the electrical key antenna.

Installation

1. Installation of electrical key antenna
   (1) Using 2 screws, install the electrical key antenna.
   (2) Connect the connector.
2. Installation of rear bumper cover (Refer to ET - 26)

Transponder key amplifier

Exploded view

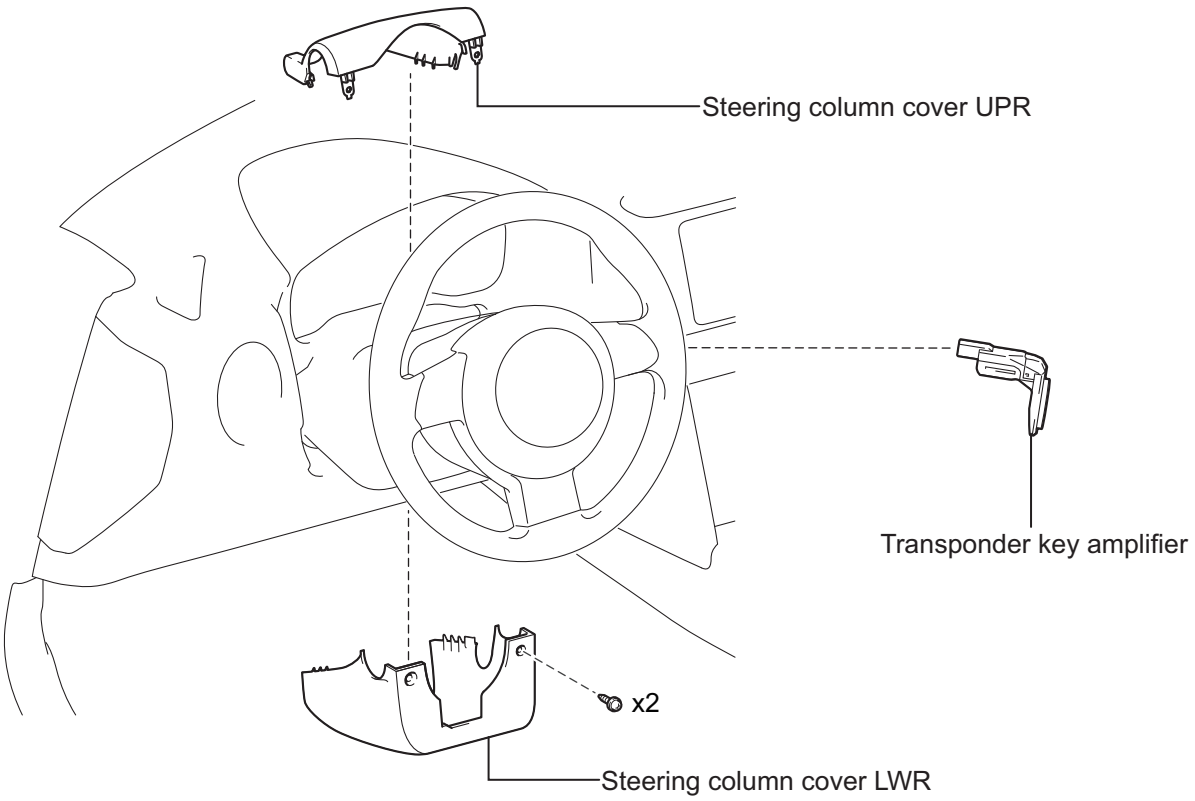

SL-10294

Removal

1. Removal of the steering column cover LWR (Refer to WW - 22)
2. Removal of the steering column cover UPR (Refer to WW - 23)

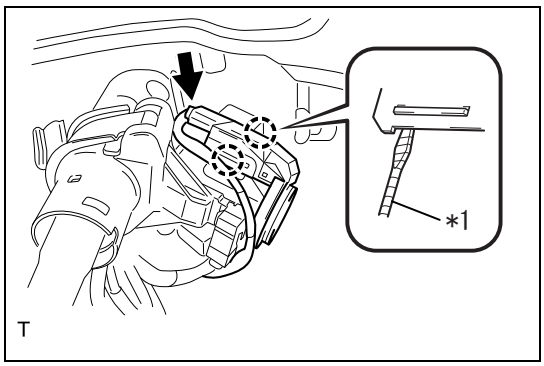

3. Removal of the transponder key amplifier
   (1) Disconnect the connector.
   (2) Release the two claws using a thin flat tip screwdriver wrapped with protective tape and remove the transponder key amplifier.

Captions in illustration

*1	Protective tape

Installation

1. Installation of the transponder key amplifier
   (1) Engage two claws and install the transponder key amplifier.

(2) Connect the connector.

2. Installation of the steering column cover UPR (Refer to WW - 23)
3. Installation of the steering column cover LWR (Refer to WW - 23)

Lighting (interior)

Lighting system
- Function inspection . . . LI-3
- Parts location . . . LI-4
- Symptom table . . . LI-7
- How to troubleshoot . . . LI-8
- Check list for interview . . . LI-10
- Customize function . . . LI-10
- Circuit figure . . . LI-12
- ECM terminal arrangement . . . LI-15
- Data monitor / active test . . . LI-17
- ACC signal circuit . . . LI-18
- IG signal circuit . . . LI-23
- Door courtesy light circuit . . . LI-25
- Engine switch illumination circuit . . . LI-29
- Door unlock detection switch circuit . . . LI-30
- Front door courtesy light switch circuit . . . LI-33
- Trunk courtesy light switch circuit . . . LI-37
- Interior illumination circuit . . . LI-40
- Ignition key cylinder light circuit . . . LI-42

Vanity light
- Exploded view . . . LI-46
- Removal . . . LI-46
- Installation . . . LI-47
- Unit inspection . . . LI-47

Personal map light
- Exploded view . . . LI-48
- Removal . . . LI-48
- Installation . . . LI-49
- Unit inspection . . . LI-50

Trunk room light
- Exploded view . . . LI-51
- Removal . . . LI-52
- Installation . . . LI-53
- Unit inspection . . . LI-53

Door courtesy light (installed to the front side)
- Exploded view . . . LI-54
- Removal . . . LI-54
- Installation . . . LI-56
- Unit inspection . . . LI-56

Ignition key cylinder light
- Exploded view . . . LI-57
- Removal . . . LI-57
- Installation . . . LI-57
- Unit inspection . . . LI-58

Front door courtesy switch
Exploded view LI-59
Removal LI-59
Installation LI-60
Unit inspection LI-60

Lighting system

Function inspection

1. Before troubleshooting
   (1) Basic inspection
      (a)Measure the battery voltage.
         Voltage: 11 to 14V (when the engine is stopped)
   (2) Inspect for blown light bulbs and fuses, wiring harnesses open circuit, short circuits, and poor contact of connectors, in places where you can inspect visually.
2. Illuminated entry system control operation check A
   CAUTION:
   Perform the check with the initial settings of the customize function.
   NOTE:
   The following lights will illuminate with the illuminated entry system (Perform the check with the mode change switch of the map light ASSY set to the DOOR mode):
   - Map light ASSY
   - Push button start switch (text illumination) *1
   - Transponder key amplifier (key cylinder light) *2

   *1: When there is a smart entry & start system
   *2: When there is no smart entry & start system
   (1) Check that the lights illuminate in the following conditions:
      (a)Open one of the doors.
   (2) Check that the light illuminates for 15 seconds and then goes off in one of the following conditions:
      (a)Enter the ID collation area for the smart key. * 1
      (b)Perform the unlock operation (wireless unlock, smart unlock, and unlock with key interlock).
      (c)When any doors are open with IG OFF, close all the doors.
      (d)With all the doors closed, turn the ignition from IG ON →IG OFF.
         *1: When there is a smart entry & start system
   (3) Check that the lights go off in one of the following conditions:
      (a)Exit the ID collation area for the smart key, then wait for 3 seconds or more. * 1
      (b)Close and lock all the doors with IG OFF.
      (c)With all the doors closed, turn the ignition to ACC ON or IG ON.
      (d)When the lights illuminate with IG OFF, turn the ignition to ACC ON or start the engine.
         *1: When there is a smart entry & start system
3. Battery saver inspection
   (1) When one of the doors is not fully closed with IG OFF, check that the lights that illuminated with the illuminated entry system go off after approx. 20 minutes.
      NOTE:
      If the operating conditions for the light control are met, the battery saver control will be cancelled.

Parts location

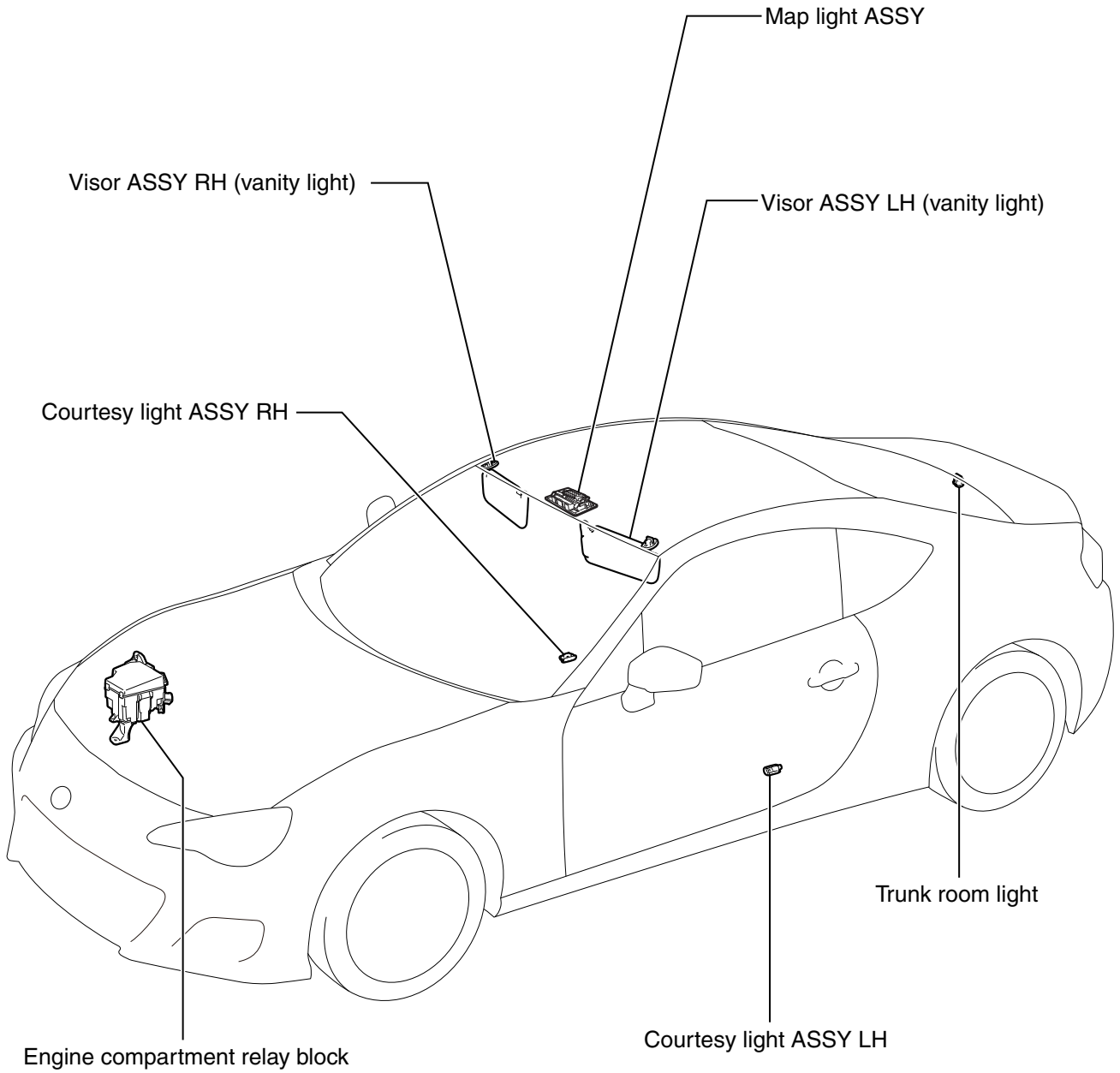

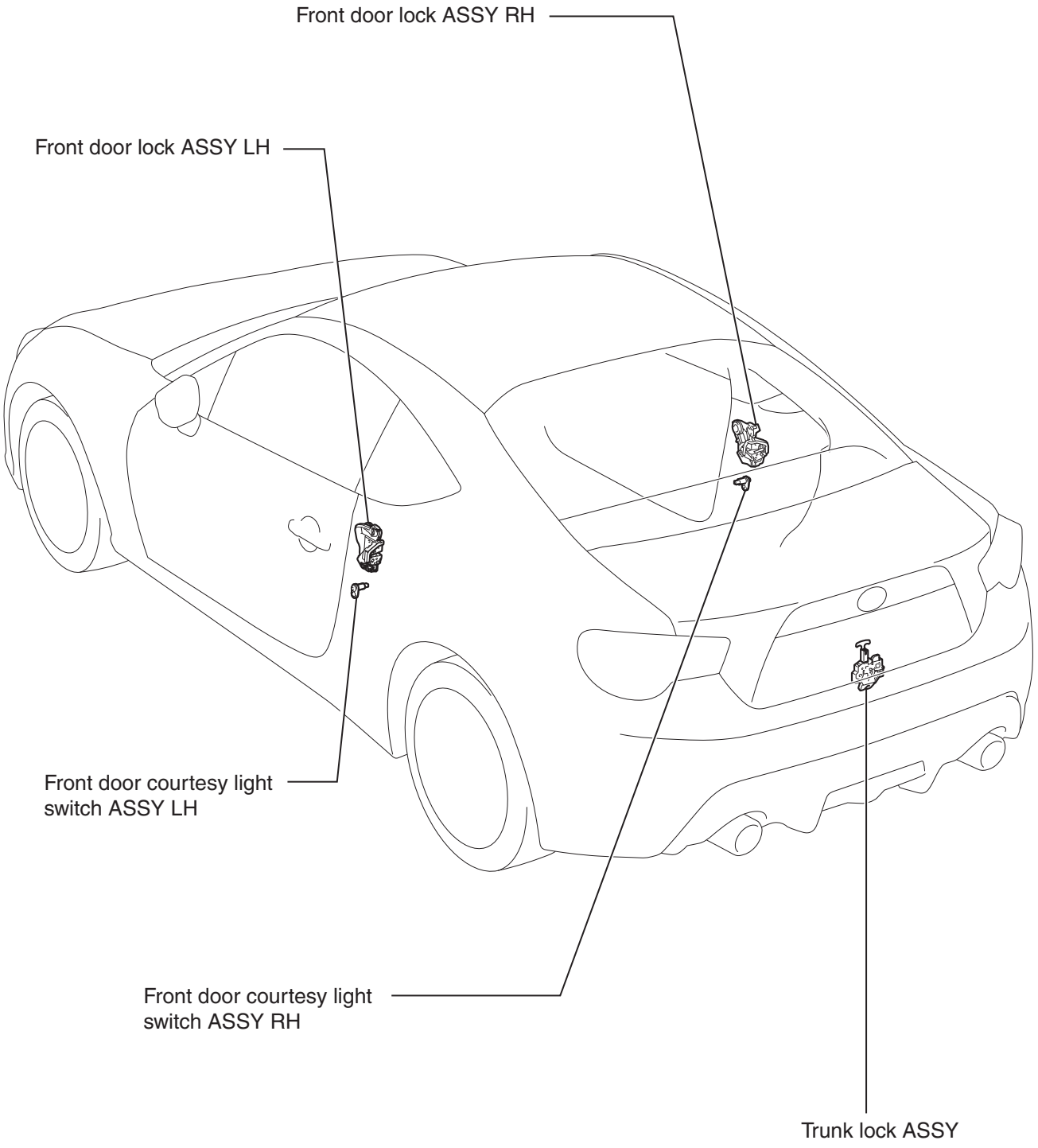
Front door lock ASSY RH
Front door lock ASSY LH
Front door courtesy light switch ASSY LH
Front door courtesy light switch ASSY RH
Trunk lock ASSY
LI-01694

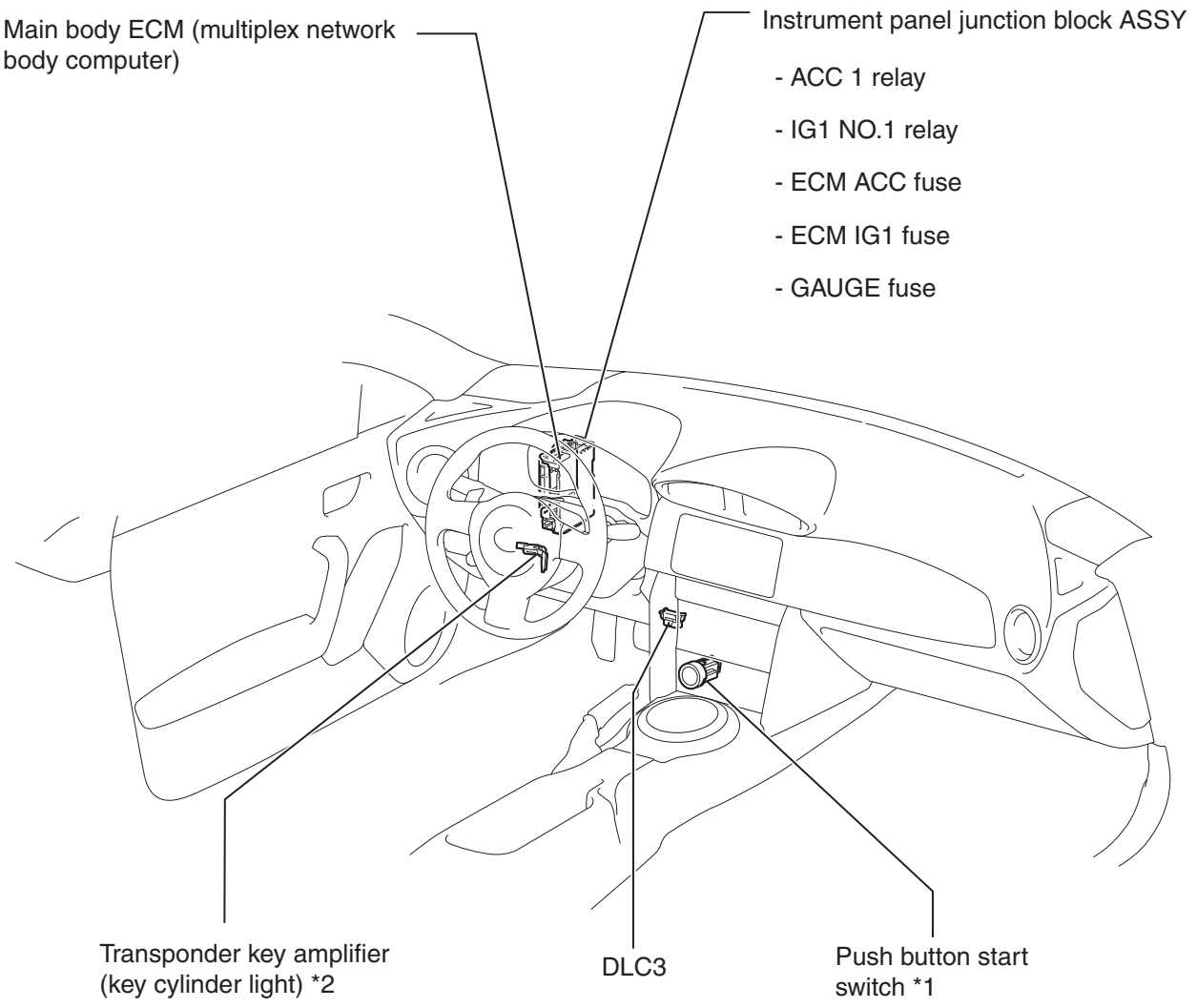

*1: With smart entry & start system

*2: Without smart entry & start system

Smart key computer ASSY (Collation ECM)*1

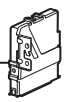

Refer to the "REGISTRATION MANUAL FOR IMMOBILIZER" for attachment position.

SL-02002

Symptom table

Illuminated entry system

Symptoms	Inspection items	Reference pages
The lights do not properly illuminate in all the operating conditions.	Interior illumination circuit	LI - 40
	Main body ECM (multiplex network body computer)	PD - 25
The light control does not work with the door open/close operations.	Front door courtesy light switch circuit	LI - 33
	Main body ECM (multiplex network body computer)	PD - 25
The light control does not work with the door lock operation.	Main body ECM (multiplex network body computer)	PD - 25
The light control does not operate when entering the smart detection area.	CAN communication system check	NW - 30
	Operation check of the smart entry & start system (smart entry function)	TD - 27
	Main body ECM (multiplex network body computer)	PD - 25
The light control does not work when operating the push button start switch *1 or the ignition switch ASSY *2.	IG signal circuit	LI - 23
	ACC signal circuit	LI - 18
	Main body ECM (multiplex network body computer)	PD - 25
The push button start switch (text illumination) does not illuminate. *1	CAN communication system check	NW - 30
	Engine switch illumination circuit	LI - 29
	Smart key computer ASSY (collation ECM)	-

*1: When there is a smart entry & start system

*2: When there is no smart entry & start system

Map light ASSY

Symptoms	Inspection items	Reference pages
The map light ASSY does not illuminate.	Bulb	-
	Map light ASSY	LI - 50
	Vehicle wiring harness and connector	-

Vanity light ASSY

Symptoms	Inspection items	Reference pages
The vanity light ASSY does not illuminate.	Bulb	-
	Visor ASSY	LI - 47
	Wiring harness or connector (including bulb holder)	-

Courtesy light ASSY

Symptoms	Inspection items	Reference pages
The courtesy light ASSY does not illuminate.	Bulb	-
	Courtesy light ASSY	LI - 56
	Front door courtesy light switch ASSY	LI - 60
	Front door courtesy light switch circuit	LI - 33
	Door courtesy light circuit	LI - 25
	Vehicle wiring harness and connector	-
	Main body ECM (multiplex network body computer)	PD - 25

Battery saver

Symptoms	Inspection items	Reference pages
The battery saver does not work.	IG signal circuit	LI - 23
	ACC signal circuit	LI - 18
	Front door courtesy light switch circuit	LI - 33
	CAN communication system check	NW - 30
	Main body ECM (multiplex network body computer)	-

*1: When there is a smart entry & start system

Transponder key amplifier (key cylinder light)

Symptoms	Inspection items	Reference pages
The transponder key amplifier (key cylinder light) does not illuminate. *1	Transponder key amplifier (key cylinder light)	TD - 337
	Ignition key cylinder light circuit	LI - 42
	Vehicle wiring harness and connector	-
	Main body ECM (multiplex network body computer)	PD - 25

*1: When there is no smart entry & start system

LI

Trunk room light

Symptoms	Inspection items	Reference pages
The trunk room light doesn't turn on.	Bulb	-
	Trunk room light	LI - 52
	Trunk courtesy light switch circuit	LI - 37
	Vehicle wiring harness and connector	-
	Instrument panel junction block ASSY	PD - 25
	Main body ECM (multiplex network body computer)	PD - 25

How to troubleshoot

1	Bring in the car

Next

2	Interview and phenomenon check

NOTE:
Refer to LI - 10.

Next

3	Inspection of CAN communication system

(1) Check all diagnostic codes to confirm that no diagnostic code is recorded.

Result

Result	Go to
No diagnostic code recorded	A
Diagnostic code recorded	B

B → Go to "CAN communication system".NW - 30

A

4	Symptom table

NOTE:
Refer to LI - 7.

Result

Result	Go to
Not applicable to the symptom table.	A
Applicable to the symptom table.	B

B → Go to Step 6.

A

5	Based on the trouble phenomenon, perform troubleshooting following the steps below.

(1) Function inspection (Refer to LI - 3)

(2) ECM terminal arrangement (Refer to LI - 15)
(3) Data monitor / active test (Refer to LI - 17)
(4) On-vehicle inspection
(5) Unit inspection

Next

6	Adjustment, repair, or replacement

Next

7	Confirmation test

Next

Complete

Check list for interview

Lighting (Interior) Diagnosis Checklist for Interview

Year/date of vehicle bring-in: Year Month Date

Name		Registration No.		First registration	Year Month Date
		Vehicle model		Frame No.	
Interviewer		Inspector		Engine type		Odometer reading	

Customer specified content

Date when trouble occurred (from when)	Year Month Date Time
Frequency of occurrence	Continuous Sometimes (times/day, times/month)
Condition of trouble occurrence	

Weather	Fine / Cloudy / Rainy / Snowy / Other ( )	Temperature	Approx. ( ) °C (°F)
Road	Inner city / Suburbs / Highway / Others ( )		Paved road / Unpaved road

Trouble symptom	
Illumination	
Switch	

DTC check	Parts name	1st output code	2nd output code

LI-01607

customize function

1. Customization of the lighting system (interior)
   (1) Customization using the SSM4

(a)Connect the SSM4 to the DLC3 and turn the ignition to IG ON.

(b)According to the screen of SSM4, select [Each System] →[Body Control] →[Customize] for customizing.

Display name	Initial setting	Contents	Setting	Controller ECM
[Lighting Time]	15 seconds	Set the function to automatically turn off the interior light after all the doors are shut, when the interior light is set to the DOOR mode.	15/7.5/30 seconds	Main body ECM (multiplex network body computer)
[I/L when ACC OFF]	[ON]	Set the function to automatically turn on the interior light by turning the ignition from ACC ON →OFF, when the interior light is set to the DOOR mode.	[ON]/[OFF]	
[I/L ON W/Door Key Unlock]	[ON]	Set the function to automatically turn on the interior light in accordance with the door unlock operation with the smart key or the mechanical key, when the interior light is set to the DOOR mode.	[ON]/[OFF]	
[Room Light when Approached]	[ON]	Set the function to turn on the interior light when the driver approaches the vehicle carrying the smart key.	[ON]/[OFF]	
[Interior Light Control]	[ON]	Set the function to turn on the interior light by a timer.	[ON]/[OFF]	

Circuit figure

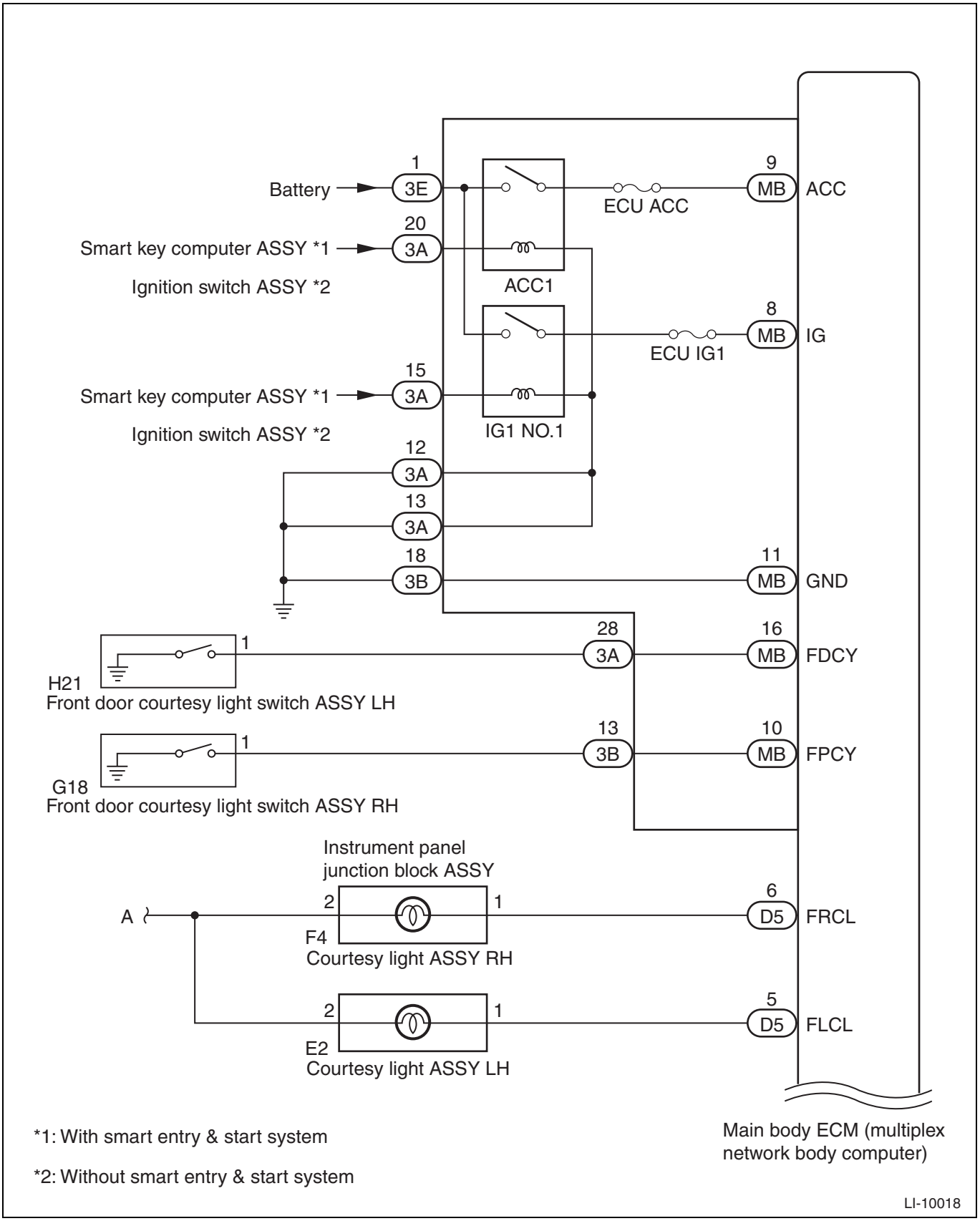

*1: With smart entry & start system

*2: Without smart entry & start system

LI-10018

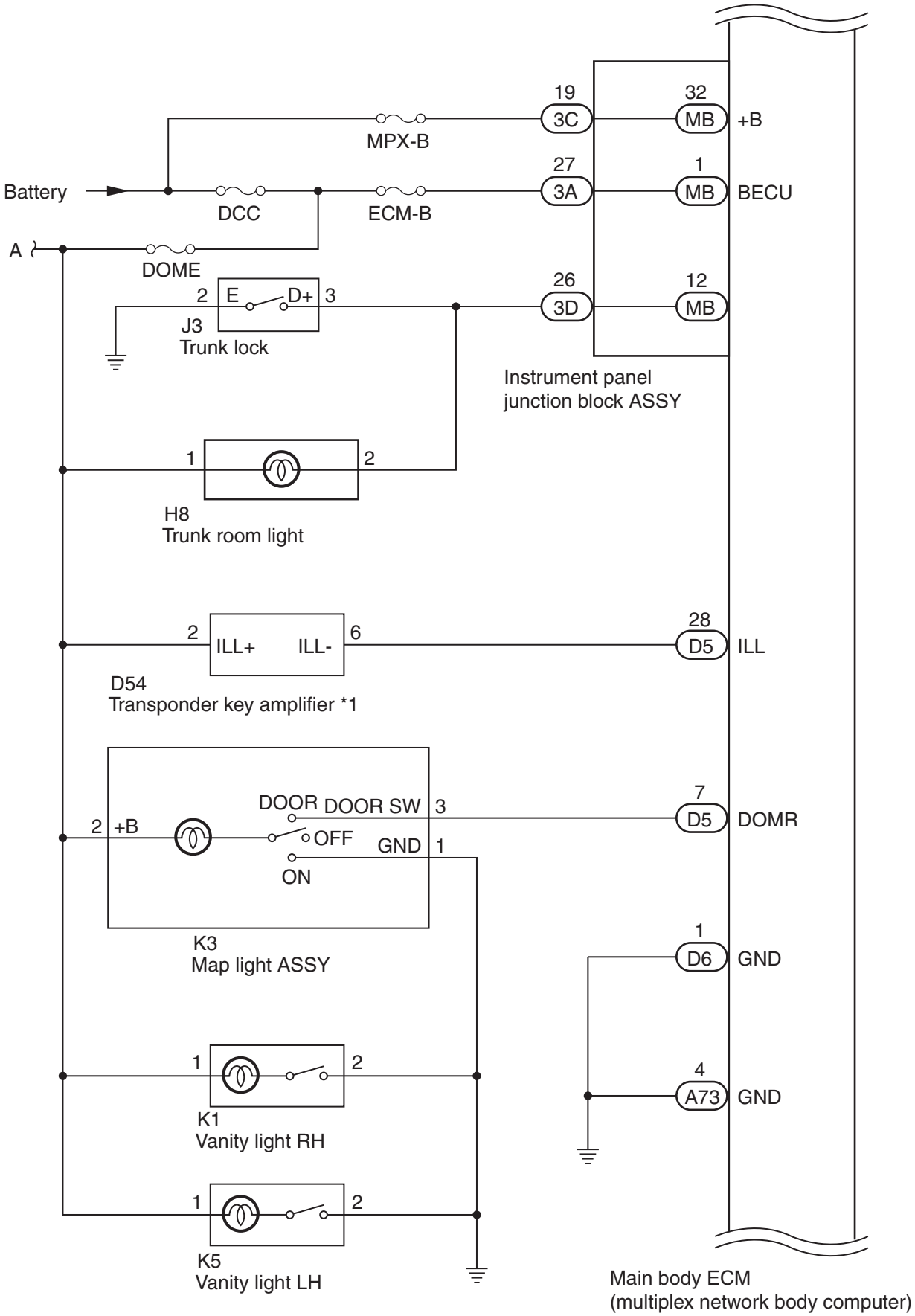

*1: Without smart entry & start system

LI-01417

LI

With smart entry & start system:

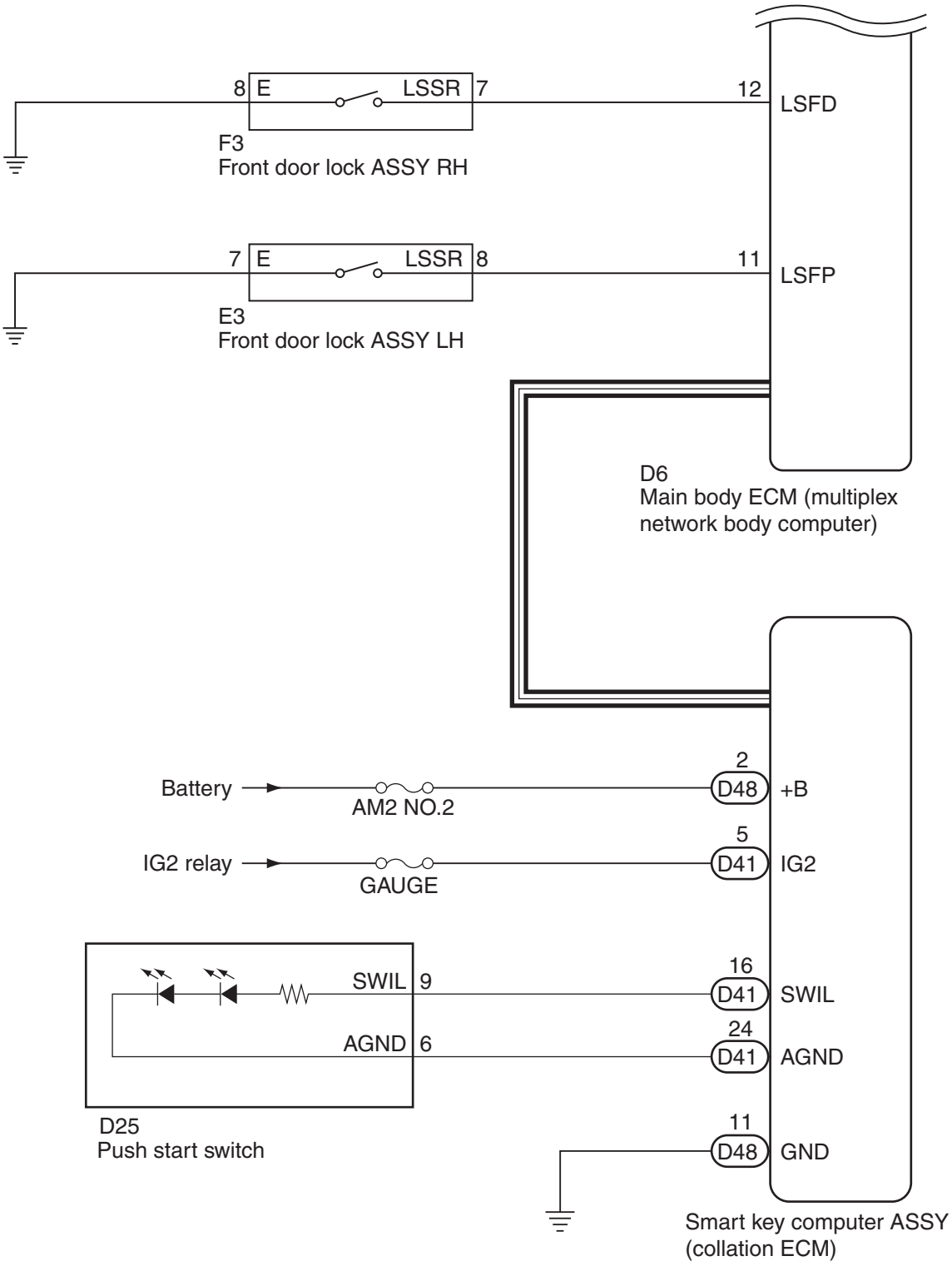

: CAN communication line

SL-02004

ECM terminal arrangement

1. Main body ECM (multiplex network body computer)

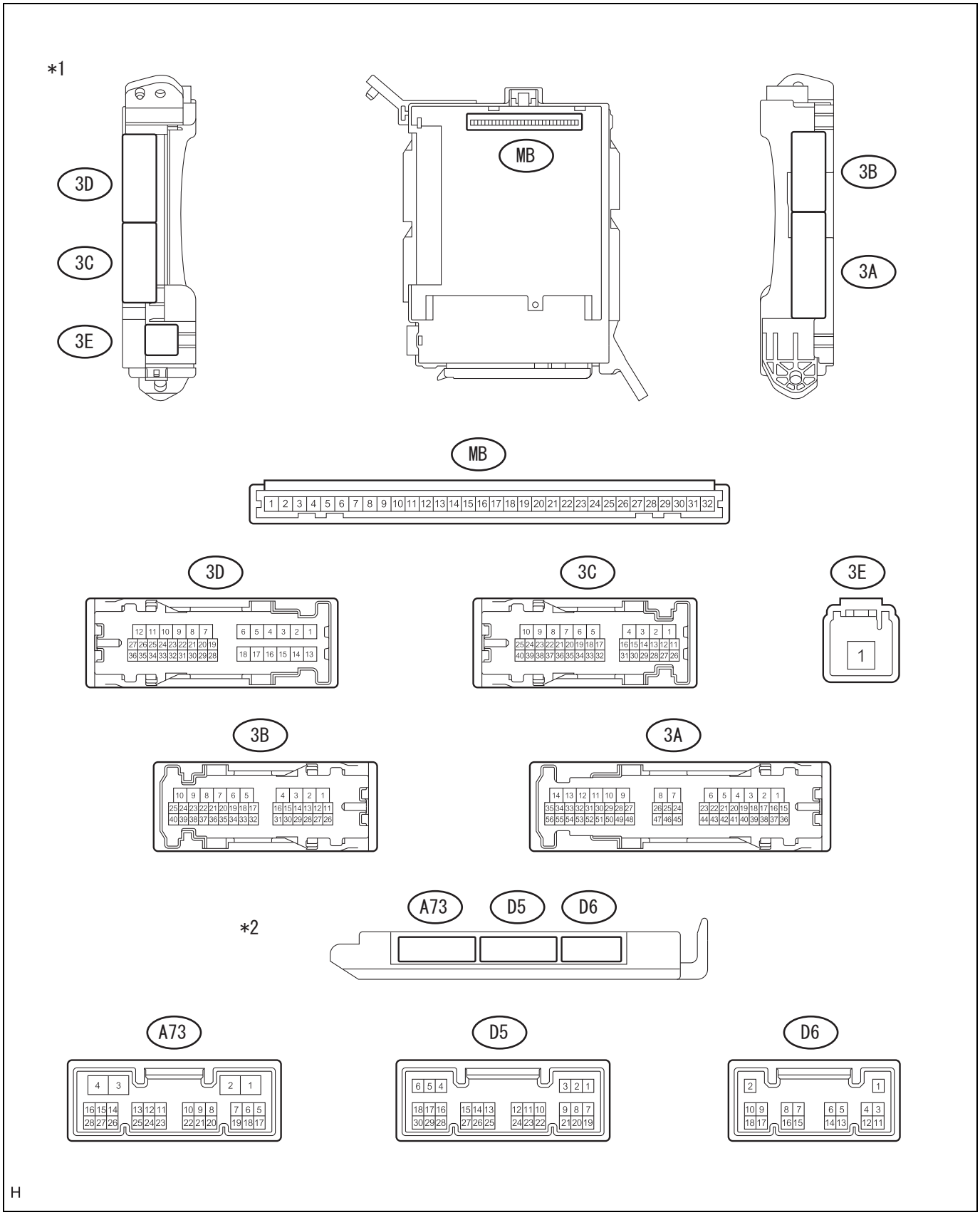

Captions in illustration

*1	Instrument panel junction block ASSY	*2	Main body ECM (multiplex network body computer)

(1) Inspection of the main body ECM (multiplex network body computer) and the instrument panel junction block ASSY

(a)Disconnect the connector of the main body ECM (multiplex network body computer).

(b)Measure the voltage between the connector terminals on the vehicle wiring harness side.

Standard value

Terminal No. (Terminal symbol)	Inspection conditions	Standard value
D5-22 (ACC) ←→chassis ground *1	ACC ON	11 to 14V

*1: With smart entry & start system

NOTE:

If it is out of the standard value, it can be judged as malfunction of the vehicle.

(c) Disconnect the connector of the instrument panel junction block ASSY.

(d)Measure the voltage and resistance between the connector terminals on the vehicle wiring harness side.

Standard value

Terminal No. (Terminal symbol)	Inspection conditions	Standard value
3A-12 ←→chassis ground	Always	Less than 1 Ω
3A-13 ←→chassis ground	Always	Less than 1 Ω
3A-15 ←→chassis ground	IG ON	11 to 14V
3A-20 ←→chassis ground	ACC ON	11 to 14V
3A-27 ←→chassis ground	Always	11 to 14V
3C-19 ←→chassis ground	Always	11 to 14V
3E-1 ←→chassis ground	Always	11 to 14V
A73-4 (GND) ←→chassis ground	Always	Less than 1 Ω
D6-1 (GND) ←→chassis ground	Always	Less than 1 Ω

LI

NOTE:

If it is out of the standard value, it can be judged as malfunction of the vehicle.

(e)Connect the connectors of the main body ECM (multiplex network body computer) and the instrument panel junction block ASSY.

(f) Measure the voltage or waveform between the connector terminals.

Standard value

Terminal No. (Terminal symbol)	Inspection conditions	Standard value
3B-13 ←→chassis ground	With driver's door closed →opened	11 to 14V →Less than 1V
3A-28 ←→chassis ground	With passenger's door closed →opened	11 to 14V →Less than 1V
3D-26 ←→chassis ground	With trunk closed →opened	11 to 14V →Less than 1V
D5-5 (FLCL) ←→chassis ground	Driver's side courtesy light ON →OFF	11 to 14V →Less than 1V
D5-6 (FRCL) ←→chassis ground	Passenger's side courtesy light ON →OFF	11 to 14V →Less than 1V
D5-7 (DOMR) ←→chassis ground	Map light ASSY OFF →ON	Less than 1 V →11 to 14 V
D5-28 (ILL) ←→chassis ground *2	Transponder key amplifier (key cylinder light) ON →OFF	Less than 1 V →11 to 14 V
D6-11 (LSFD) ←→chassis ground *1	Driver's side door locked →unlocked	Pulse generation →less than 1 V
D6-12 (LSFP) ←→chassis ground *1	Passenger's side door locked →unlocked	Pulse generation →less than 1 V

*1: With smart entry & start system

*2: Without smart entry & start system

NOTE:

If the measured value is not within the range of the standard value, it can be determined that the main body ECM (multiplex network body computer) has a fault.

2. Smart key computer ASSY (collation ECM)

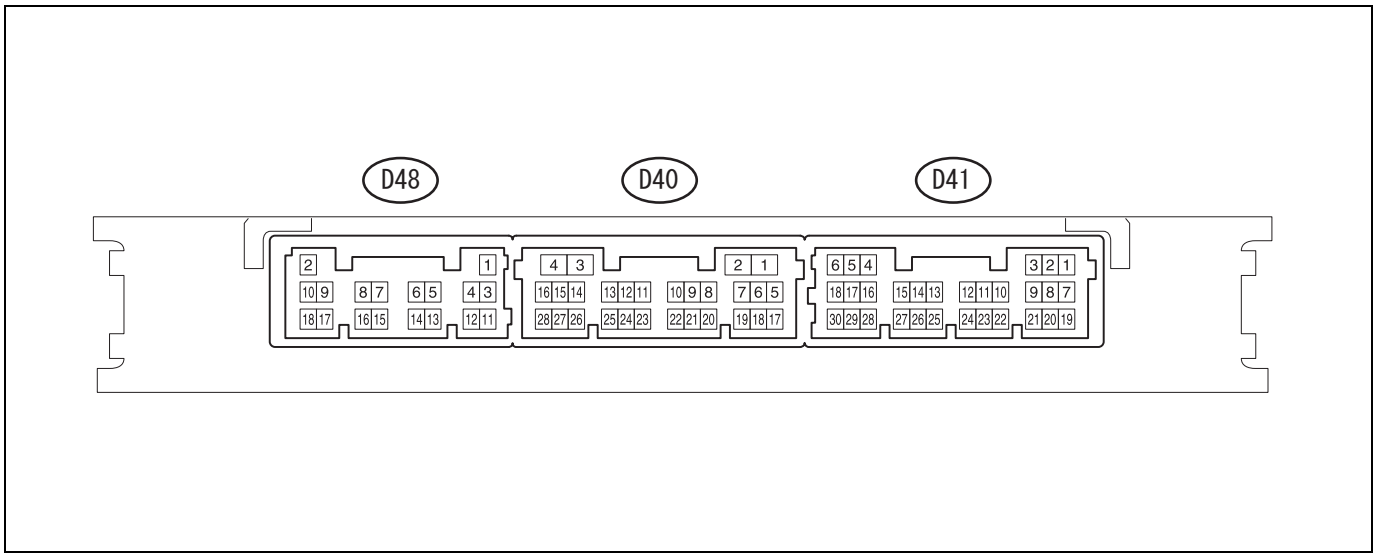

(1) Inspection of the smart key computer ASSY (collation ECM)

(a) Disconnect the connector D48 of the smart key computer ASSY (collation ECM).

(b) Measure the voltage and resistance between the connector terminals of the smart key computer ASSY (collation ECM) on the vehicle side.

Standard value

Terminal No. (Terminal symbol)	Input/Output	Item	Inspection conditions	Standard value
D48-2 (+B)←→D48-11	Input	Voltage	Always	11 to 14V
D48-11 (GND) ←→chassis ground	-	Resistance	Always	Less than 1 Ω

NOTE:

If it is out of the standard value, it can be judged as malfunction of the vehicle.

(c) Connect the connector D48 of the smart key computer ASSY (collation ECM).

(d) Measure the voltage between the connector terminals.

Standard value

Terminal No. (Terminal symbol)	Input/Output	Item	Inspection conditions	Standard value
D41-16 (SWIL)←→D41-24 (AGND)	Output	Voltage	Push button start switch ON →OFF	11 to 14V →Less than 1V
D41-5 (IG2) ←→Chassis ground	Input	Voltage	IG ON	11 to 14V

NOTE:

If the measured value is not within the range of the standard value, it can be determined that the smart key computer ASSY (collation ECM) has a fault.

Data monitor / active test

1. Inspection with SSM4 (data monitor)

(1) On the SSM4, navigate to the [Data monitor] display, and check the computer data.

SSM4 screen: [Each System] →[Body Control] →[Data monitor]

Item name	Description/display range	Normal value	Remarks
[D Door Courtesy]	Status of the front door courtesy light switch ASSY RH Display range: [Close]-[Open]	[Close]: Close the driver's door. [Open]: Open the driver's door.	-
[D Door Lock Pos]	Lock/unlock status of the driver's side door Display range: [Lock]-[Unlock]	[Lock]: When the driver's side door is locked. [Unlock]: When the driver's side door is unlocked.	-

Item name	Description/display range	Normal value	Remarks
[P Door Courtesy]	Status of the front door courtesy light switch ASSY LH Display range: [Close]-[Open]	[Close]: Close the passenger's door. Open: Open the passenger's door.	-
[P Door Lock Pos]	Lock/unlock status of the passenger's side door Display range: [Lock]-[Unlock]	[Lock]: When the passenger's side door is locked. [Unlock]: When the passenger's side door is unlocked.	-
[Luggage Courtesy SW]	Status of the trunk lock ASSY Display range: [Close]-[Open]	Closed: The trunk is closed. Open: The trunk is open.	-
[Ignition]	Status of the IG signal Display range: OFF-ON	OFF: IG OFF ON: IG ON	This item will be displayed as [OFF] in the ACC ON status.
[ACC SW]	Status of the ACC signal Display range: OFF-ON	OFF: ACC OFF ON: The power mode is ACC ON or IG ON.	This item will be displayed as [ON] in the IG ON status.
[Room lamp output]	Status of the map light ASSY Display range: OFF-ON	OFF: Map light ASSY OFF ON: Map light ASSY ON	-
[key illumination lamp o/p]	Status of the key cylinder light Display range: OFF-ON	OFF: Key cylinder light OFF ON: Key cylinder light ON	-
[D-Door Courtesy Lamp]	Status of the driver's side courtesy light ASSY Display range: OFF-ON	OFF: Driver's side courtesy light ASSY OFF ON: Driver's side courtesy light ASSY ON	-
[P-Door Courtesy Lamp]	Status of the passenger's side courtesy light ASSY Display range: OFF-ON	OFF: Passenger's side courtesy light ASSY OFF ON: Passenger's side courtesy light ASSY ON	-

LI

2. Inspection with SSM4 (active test)

(1) Using SSM4, display the [Active Test] screen according to the screen and perform check.

SSM4 screen: [Each System] →[Body Control] →[Active Test]

Item name	Item description	Drive
[Illuminated Entry System]*	The lights controlled by the illuminated entry system are turned on	OFF/ON
[D-Door Courtesy Lamp]	The driver's side courtesy light ASSY is turned on	OFF/ON
[P-Door Courtesy Lamp]	The passenger's side courtesy light ASSY is turned on	OFF/ON
[Key illumi. Lamp]	The key cylinder light is turned on	OFF/ON

NOTE:

*: Perform the inspection with the changing switch of the map light ASSY set to the DOOR mode.

SSM4 screen: [Each System] →[Body Control] →[Active Test]

Item name	Item description	Drive
[Key illumi. Lamp]	Turn on the text illumination of the push button start switch.	Stop/output

ACC signal circuit

Circuit description

The main body ECM (multiplex network body computer) is detecting the ACC signal.

Circuit figure

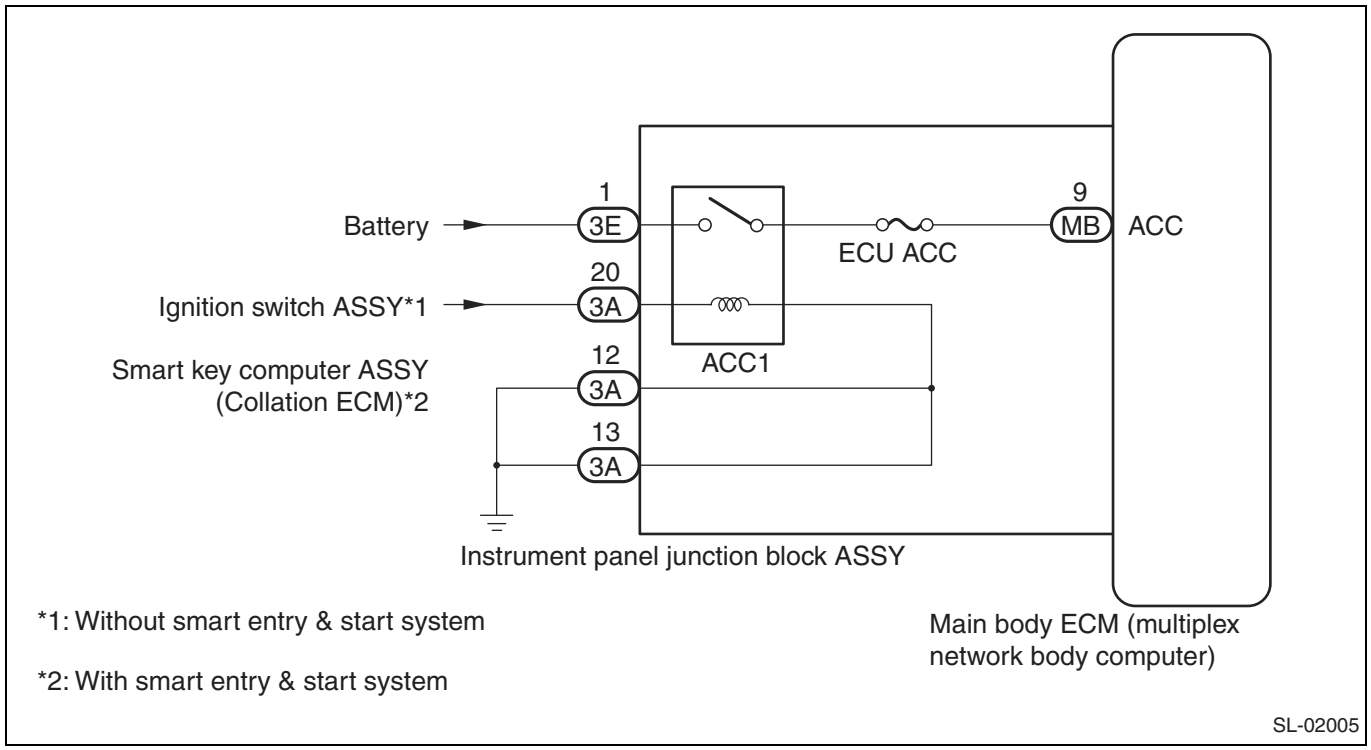

Inspection steps

CAUTION:

Before performing the troubleshooting, check the fuse of this circuit.

1	Reading the current data of the SSM4 (ACC SW)

(1) On the SSM4, navigate to the [Data monitor] display, and check the computer data. (Refer to LI - 17)

Criteria: The normal value on the data monitor is displayed properly.

SSM4 screen: [Each System] →[Body Control] →[Data monitor]

Item name	Description/display range	Normal value	Remarks
[ACC SW]	Status of the ACC signal Display range: OFF-ON	OFF: ACC OFF ON: The power mode is ACC ON or IG ON.	This item will be displayed as [ON] in the IG ON status.

NG → Go to Step 2.

OK

See the next circuit for inspection shown on the symptom table. (Refer to LI - 7)

2	Inspection of the wiring harness and the connector (ACC1 relay power supply)

NOTE:

For inspection procedures and precautions, refer to IN - 36.

(1) Disconnect the connectors 3A and 3E of the instrument panel junction block ASSY.

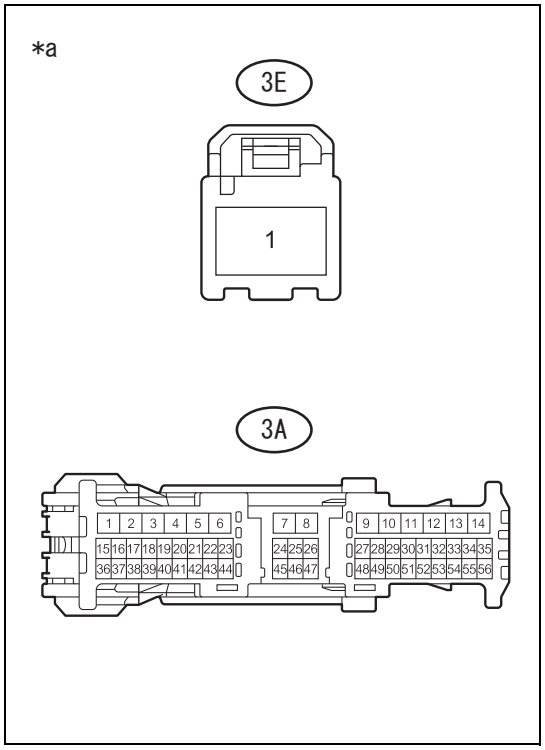

(2) Measure the voltage between the connector terminals on the vehicle wiring harness side.
Voltage

Inspection terminals	Inspection conditions	Standard value
3E-1 - chassis ground	Always	11 to 14V
3A-20 - chassis ground	ACC ON	11 to 14V

(3) Measure the resistance between the connector terminals on the vehicle wiring harness side.
Resistance

Inspection terminals	Inspection conditions	Standard value
3A-12 - chassis ground	Always	Less than 1 Ω
3A-13 - chassis ground	Always	Less than 1 Ω

Result

Result	Go to
OK (smart entry & start system not equipped)	A
OK (smart entry & start system equipped)	B
NG	C

Captions in illustration

*a	Front side of vehicle wiring harness connector (instrument panel junction block ASSY connector)

B → Go to Step 4.

C → Repair or replacement of wiring harness or connector

A

3	Inspection of the instrument panel junction block ASSY (ACC1 relay inspection)

NOTE:
For inspection procedures and precautions, refer to IN - 36.

(1) Remove the instrument panel junction block ASSY from the vehicle. (Refer to PD - 25)
(2) Remove the main body ECM (multiplex network body computer) from the instrument panel junction block ASSY.
(3) Measure the resistance between the terminals.

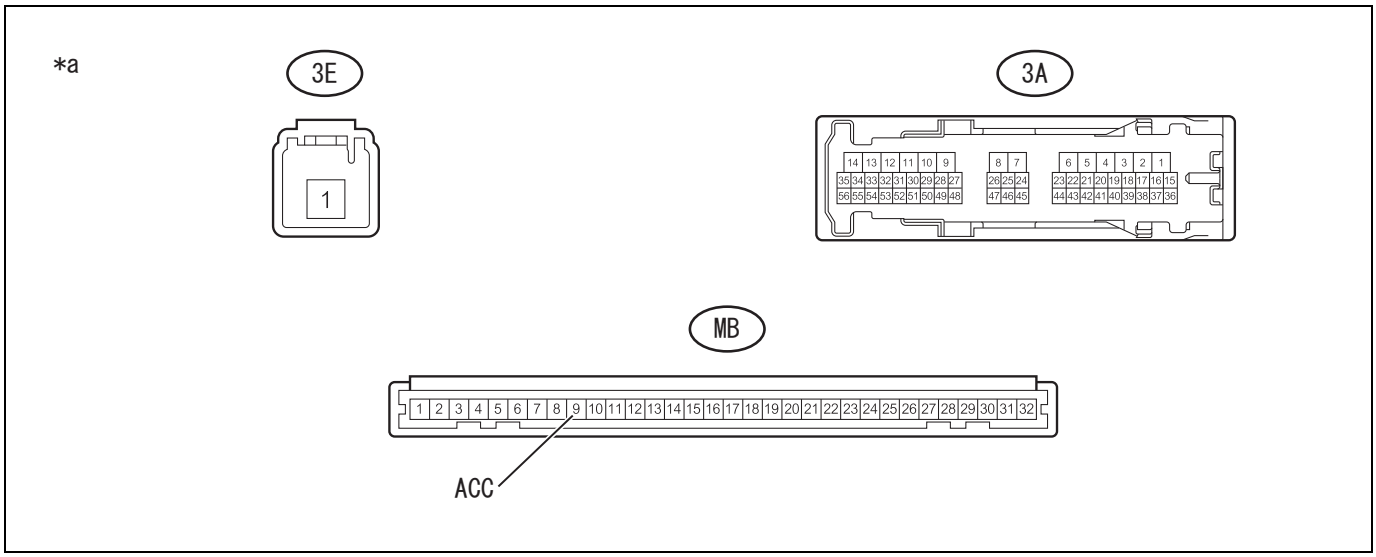

Captions in illustration

*a	Connector not connected (Instrument panel junction block ASSY)	-	-

Resistance

Inspection terminals	Inspection conditions	Standard value
3E-1 - MB-9 (ACC)	Always	10 kΩ or more
3E-1 - MB-9 (ACC)	Connect the battery's positive terminal to the 3A-20 terminal, and the ground terminal to the 3A-12 or the 3A-13 terminal.	Less than 1 Ω

NG → Replacement of the instrument panel junction block ASSY (Refer to PD - 25)

OK

Replacement of the main body ECM (multiplex network body computer) (Refer to PD - 25)

4	Inspection of the instrument panel junction block ASSY (ACC1 relay inspection)

NOTE:
For inspection procedures and precautions, refer to IN - 36.

(1) Remove the instrument panel junction block ASSY from the vehicle. (Refer to PD - 25)
(2) Remove the main body ECM (multiplex network body computer) from the instrument panel junction block ASSY.
(3) Measure the resistance between the terminals.

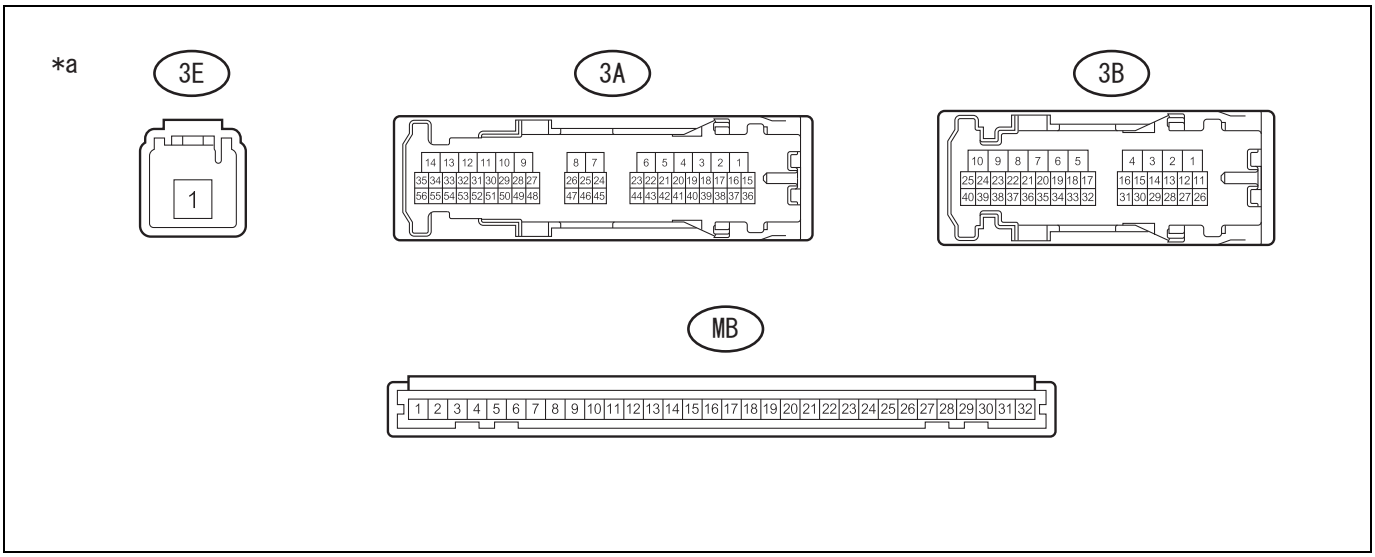

Captions in illustration

*a	Connector not connected (Instrument panel junction block ASSY)	-	-

LI

Resistance

Inspection terminals	Inspection conditions	Standard value
3E-1 - MB-9 (ACC)	Always	10 kΩ or more
3E-1 - 3B-28	Always	10 kΩ or more
3E-1 - MB-9 (ACC)	Connect the battery's positive terminal to the 3A-20 terminal, and the ground terminal to the 3A-12 or the 3A-13 terminal.	Less than 1 Ω
3E-1 - 3B-28	Connect the battery's positive terminal to the 3A-20 terminal, and the ground terminal to the 3A-12 or the 3A-13 terminal.	Less than 1 Ω

NG → Replacement of the instrument panel junction block ASSY (Refer to PD - 25)

OK

5	Inspection of the wiring harness and the connector (instrument panel junction block ASSY - main body ECM (multiplex network body computer))

NOTE:
For inspection procedures and precautions, refer to IN - 36.
(1) Measure the resistance between the connector terminals on the vehicle wiring harness side.

Resistance

Inspection terminals	Inspection conditions	Standard value
3B-28 - D5-22 (ACC)	Always	Less than 1 Ω

Inspection terminals	Inspection conditions	Standard value
3B-28 - chassis ground	Always	10 kΩ or more

NG → Repair or replacement of wiring harness or connector

OK

Replacement of the main body ECM (multiplex network body computer) (Refer to PD - 25)

IG signal circuit

Circuit description

The main body ECM (multiplex network body computer) is detecting the IG signal.

Circuit figure

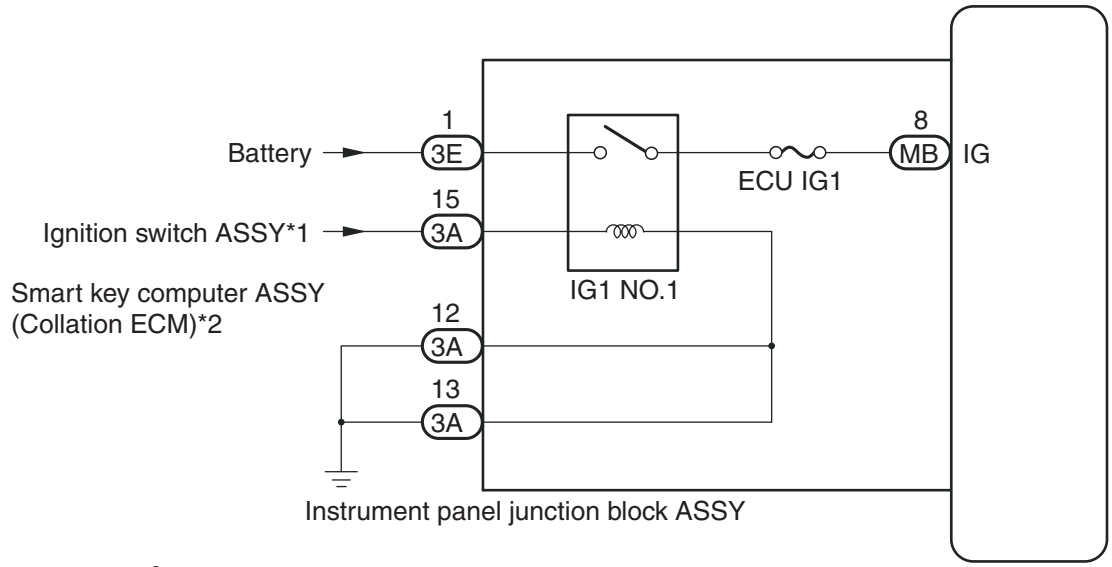

*1: Without smart entry & start system

*2: With smart entry & start system

Inspection steps

CAUTION:

Before performing the troubleshooting, check the fuse of this circuit.

1	Reading the current data of the SSM4 (IG SW)

(1) On the SSM4, navigate to the [Data monitor] display, and check the computer data. (Refer to LI - 17)

SSM4 screen: [Each System] →[Body Control] →[Data monitor]

Item name	Description/display range	Normal value	Remarks
[Ignition]	Status of the IG signal Display range: OFF-ON	OFF: IG OFF ON: IG ON	This item will be displayed as [OFF] in the ACC ON status.

Criteria: The normal value on the data monitor is displayed properly.

NG → Go to Step 2.

OK

See the next circuit for inspection shown on the symptom table. (Refer to LI - 7)

2	Inspection of the wiring harness and the connector (IG1 NO.1 relay power supply)

NOTE:
For inspection procedures and precautions, refer to IN - 36.
(1) Disconnect the connectors 3A and 3E of the instrument panel junction block ASSY.

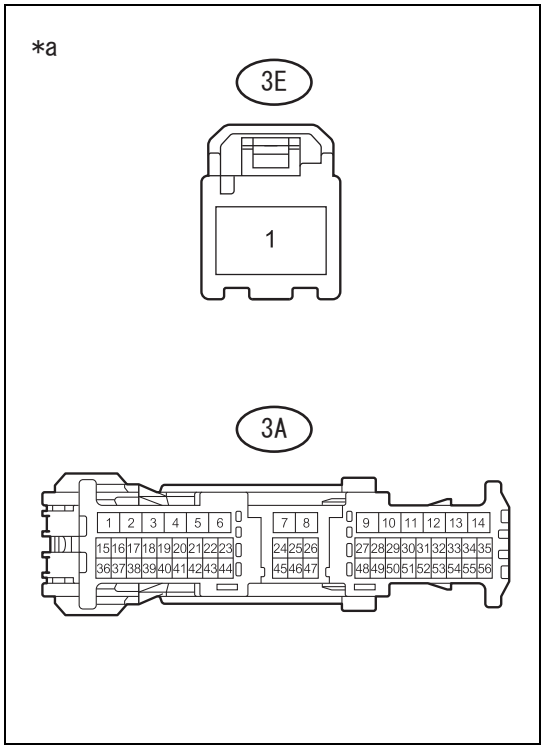

(2) Measure the voltage between the connector terminals on the vehicle wiring harness side.
Voltage

Inspection terminals	Inspection conditions	Standard value
3E-1 - chassis ground	Always	11 to 14V
3A-15 - chassis ground	IG ON	11 to 14V

(3) Measure the resistance between the connector terminals on the vehicle wiring harness side.
Resistance

Inspection terminals	Inspection conditions	Standard value
3A-12 - chassis ground	Always	Less than 1 Ω
3A-13 - chassis ground	Always	Less than 1 Ω

Captions in illustration

*a	Front side of vehicle wiring harness connector (instrument panel junction block ASSY connector)

NG → Repair or replacement of wiring harness or connector

OK

3	Inspection of the instrument panel junction block ASSY (IG1 NO.1 relay inspection)

NOTE:
For inspection procedures and precautions, refer to IN - 36.
(1) Remove the instrument panel junction block ASSY from the vehicle. (Refer to PD - 25)
(2) Remove the main body ECM (multiplex network body computer) from the instrument panel junction block ASSY.
(3) Measure the resistance between the terminals.

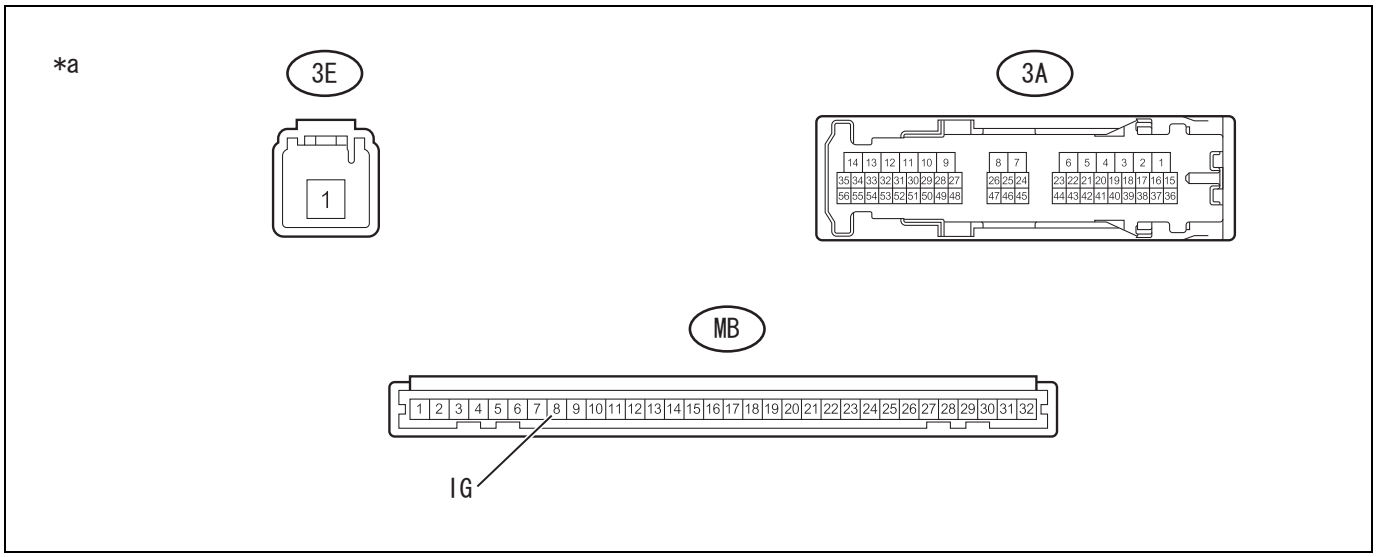

Captions in illustration

*a	Connector not connected (Instrument panel junction block ASSY)	-	-

Resistance

Inspection terminals	Inspection conditions	Standard value
3E-1 - MB-8 (IG)	Always	10 kΩ or more
3E-1 - MB-8 (IG)	Connect the battery's positive terminal to the 3A-15 terminal, and the ground terminal to the 3A-12 or the 3A-13 terminal.	Less than 1 Ω

NG → Replacement of the instrument panel junction block ASSY (Refer to PD - 25)

OK

Replacement of the main body ECM (multiplex network body computer) (Refer to PD - 25)

Door courtesy light circuit

Circuit description

The courtesy light ASSY is controlled to illuminate by the main body ECM (multiplex network body computer).

Circuit figure

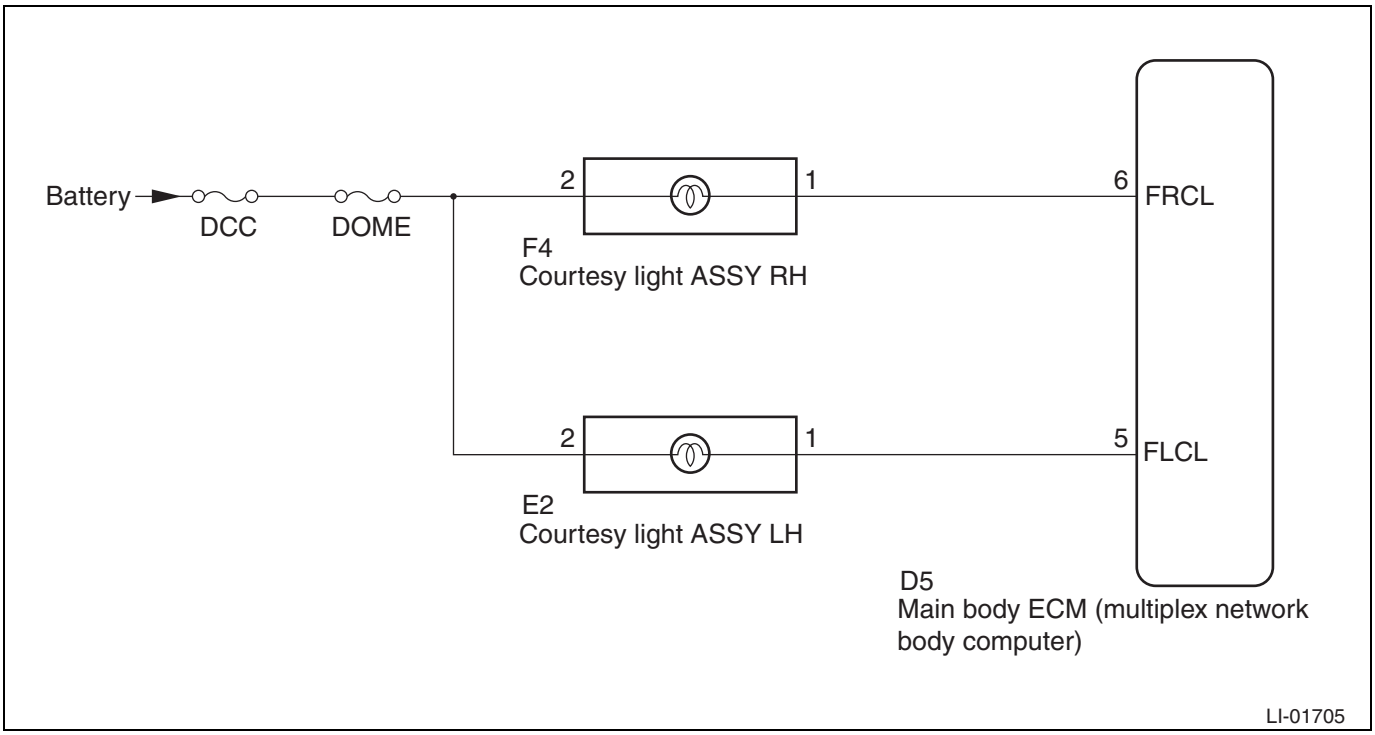

LI

Inspection steps

NOTE:

Before performing the troubleshooting, check the fuses and the lights of this circuit.

1	Implementation of SSM4 active test

(1) Using SSM4, display the [Active Test] screen according to the screen and check the computer data. (Refer to LI - 17)

SSM4 screen: [Each System] →[Body Control] →[Active Test]

Item name	Item description	Drive
[D-Door Courtesy Lamp]	The driver's side courtesy light is turned on	OFF/ON
[P-Door Courtesy Lamp]	The passenger's side courtesy light is turned on	OFF/ON

Criteria: The driver's and passenger's side courtesy lights are turned on

Result

Result	Go to
All items show the normal status.	A
[D-Door Courtesy Lamp] shows an abnormal status.	B
[P-Door Courtesy Lamp] shows an abnormal status.	C

B → Go to Step 2.

C → Go to Step 5.

A

See the next circuit for inspection shown on the symptom table. (Refer to LI - 7)

2	Inspection of the wiring harness and the connector (courtesy light ASSY LH - battery)

NOTE:
For inspection procedures and precautions, refer to IN - 36.
(1) Disconnect the connector E2 of the courtesy light ASSY LH.
(2) Measure the voltage of the vehicle wiring harness connector.
Voltage

Inspection terminals (Terminal symbol)	Inspection conditions	Standard value
E2-2 - chassis ground	Always	11 to 14 V

NG → Repair or replacement of wiring harness or connector

OK

3	Unit inspection of the courtesy light ASSY LH

(1) Remove the courtesy light ASSY LH. (Refer to LI - 54)
(2) Perform the unit inspection of the courtesy light ASSY LH. (Refer to LI - 56)
Criteria: The courtesy light ASSY LH illuminates.

NG → Replacement of the courtesy light ASSY LH (Refer to LI - 54)

OK

4	Inspection of the wiring harness and the connector (main body ECM (multiplex network body computer) - courtesy light ASSY LH)

NOTE:
For inspection procedures and precautions, refer to IN - 36.
(1) Disconnect the connector D5 of the main body ECM (multiplex network body computer).
(2) Disconnect the connector E2 of the courtesy light ASSY LH.
(3) Measure the resistance of the vehicle wiring harness connector.
Resistance

Inspection terminals (Terminal symbol)	Inspection conditions	Standard value
D5-5 (FLCL) - E2-1	Always	Less than 1 Ω
E2-1 - chassis ground	Always	10 kΩ or more

NG → Repair or replacement of wiring harness or connector

OK

Replacement of the main body ECM (multiplex network body computer) (Refer to PD - 25)

5	Inspection of the wiring harness and the connector (courtesy light ASSY RH - battery)

NOTE:
For inspection procedures and precautions, refer to IN - 36.
(1) Disconnect the connector F4 of the courtesy light ASSY RH.
(2) Measure the voltage of the vehicle wiring harness connector.
Voltage

Inspection terminals (Terminal symbol)	Inspection conditions	Standard value
F4-2 - Chassis ground	Always	11 to 14 V

NG → Repair or replacement of wiring harness or connector

OK

6	Unit inspection of the courtesy light ASSY RH

LI

(1) Remove the courtesy light ASSY RH. (Refer to LI - 54)
(2) Perform the unit inspection of the courtesy light ASSY RH. (Refer to LI - 56)
Criteria: The courtesy light ASSY RH illuminates.

NG → Replacement of the courtesy light ASSY RH (Refer to LI - 54)

OK

7	Inspection of the wiring harness and the connector (main body ECM (multiplex network body computer) - courtesy light ASSY RH)

NOTE:
For inspection procedures and precautions, refer to IN - 36.
(1) Disconnect the connector D5 of the main body ECM (multiplex network body computer).
(2) Disconnect the connector F4 of the courtesy light ASSY RH.
(3) Measure the resistance of the vehicle wiring harness connector.
Resistance

Inspection terminals (Terminal symbol)	Inspection conditions	Standard value
D5-6 (FRCL) - F4-1	Always	Less than 1 Ω
F4-1 - chassis ground	Always	10 kΩ or more

NG → Repair or replacement of wiring harness or connector

OK

Replacement of the main body ECM (multiplex network body computer) (Refer to PD - 25)

Engine switch illumination circuit

Circuit description

The text illumination of the push button start switch is controlled by the smart key computer ASSY (collation ECM).

Circuit figure

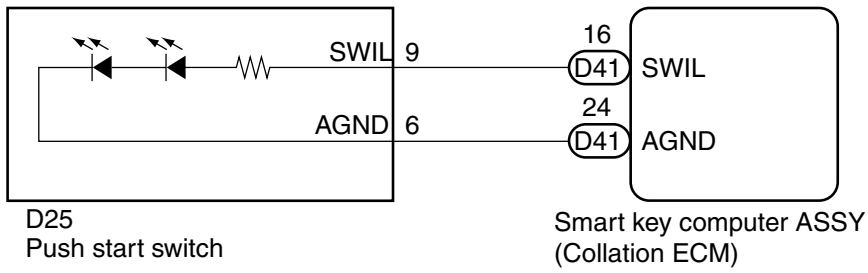

LI

Inspection steps

1	Implementation of SSM4 active test (push button start switch)

(1) Using SSM4, display the [Active Test] screen according to the screen and check the computer data. (Refer to LI - 17)

SSM4 screen: [Each System] →[Keyless Access(Collation ECM)] →[Active Test]

Item name	Item description	Drive
[Key illumi. Lamp]	Turn on the text illumination of the push button start switch.	Stop/output

Criteria: The active test can be performed properly.

NG → Go to Step 2.

OK

See the next circuit for inspection shown on the symptom table. (Refer to LI - 7)

2	Unit inspection of the push button start switch

(1) Remove the push button start switch. (Refer to ST - 43)

(2) Perform the unit inspection of the push button start switch. (Refer to ST - 44)

Criteria: The text illumination turns on.

NG → Replacement of the push button start switch (Refer to ST - 43)

OK

3	Inspection of the wiring harness and the connector (push button start switch - smart key computer ASSY (collation ECM) and chassis ground)

NOTE:
For inspection procedures and precautions, refer to IN - 36.
(1) Disconnect the connector D25 of the push button start switch.
(2) Disconnect the connector D41 of the smart key computer ASSY (collation ECM).
(3) Measure the resistance between the connector terminals on the vehicle wiring harness side.

Resistance

Inspection terminals	Inspection conditions	Standard value
D41-16 (SWIL) - D25-9 (SWIL)	Always	Less than 1 Ω
D41-24 (AGND) - D25-6 (AGND)	Always	Less than 1 Ω
D41-16 (SWIL) - chassis ground	Always	10 kΩ or more
D41-24 (AGND) - chassis ground	Always	10 kΩ or more

NG → Repair or replacement of wiring harness or connector

OK

Replacement of the smart key computer ASSY (collation ECM)

Door unlock detection switch circuit

Circuit description
The main body ECM (multiplex network body computer) is receiving the door lock position switch signal from each door.

Circuit figure

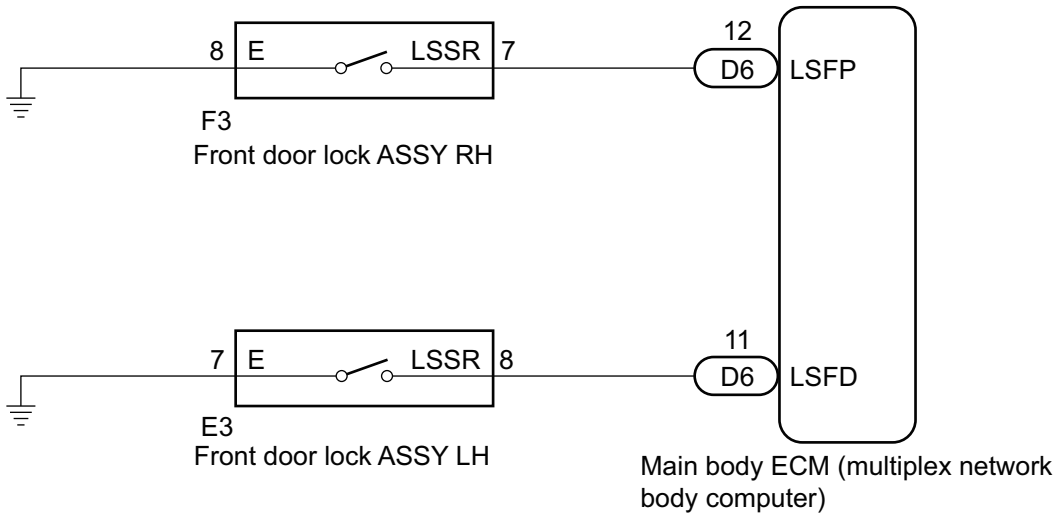

LI-10604

Inspection steps

1	Reading of SSM4 data monitor (door lock position switch)

(1) On the SSM4, navigate to the [Data monitor] display, and check the computer data. (Refer to LI - 17)

Criteria: The normal value on the data monitor is displayed properly.

SSM4 screen: [Each System] →[Body Control] →[Data monitor]

Item name	Description/display range	Normal value	Remarks
[D Door Lock Pos]	Lock/unlock status of the driver's side door Display range: [Lock]-[Unlock]	[Lock]: When the driver's side door is locked. [Unlock]: When the driver's side door is unlocked.	-
[P Door Lock Pos]	Lock/unlock status of the passenger's side door Display range: [Lock]-[Unlock]	[Lock]: When the passenger's side door is locked [Unlock]: When the passenger's side door is unlocked	-

Result

Result	Go to
OK	A
NG (The door lock position switch of the driver's side door does not operate.)	B
NG (The door lock position switch of the passenger's side door does not operate.)	C

B	Go to Step 2.
C	Go to Step 4.

A

See the next circuit for inspection shown on the symptom table. (Refer to LI - 7)

2	Unit inspection of the front door lock ASSY RH

(1) Remove the front door lock ASSY RH. (Refer to DL - 101)
(2) Perform the unit inspection of the front door lock ASSY RH. (Refer to DL - 102)
Criteria: The inspection result shows the normal status.

NG → Replacement of the front door lock ASSY RH (Refer to DL - 101)

OK

3	Inspection of the wiring harness and the connector (front door lock ASSY RH - main body ECM (multiplex network body computer) and chassis ground)

LI

NOTE:
For inspection procedures and precautions, refer to IN - 36.
(1) Disconnect the connector F3 of the front door lock ASSY RH.
(2) Disconnect the connector D6 of the main body ECM (multiplex network body computer).
(3) Measure the resistance between the connector terminals on the vehicle wiring harness side.
Resistance

Inspection terminals	Inspection conditions	Standard value
D6-12 (LSFP) - F3-7 (LSSR)	Always	Less than 1 Ω
F3-8 (E) - chassis ground	Always	Less than 1 Ω
F3-7 (LSSR) - chassis ground	Always	10 kΩ or more

NG → Repair or replacement of wiring harness or connector

OK

Replacement of the main body ECM (multiplex network body computer) (Refer to PD - 25)

4	Unit inspection of the front door lock ASSY LH

(1) Remove the front door lock ASSY LH. (Refer to DL - 101)
(2) Perform the unit inspection of the front door lock ASSY LH. (Refer to DL - 102)
Criteria: The inspection result shows the normal status.

NG → Replacement of the front door lock ASSY LH (Refer to DL - 101)

OK

5	Inspection of the wiring harness and the connector (front door lock ASSY LH - main body ECM (multiplex network body computer) and chassis ground)

NOTE:
For inspection procedures and precautions, refer to IN - 36.
(1) Disconnect the connector E3 of the front door lock ASSY LH.
(2) Disconnect the connector D6 of the main body ECM (multiplex network body computer).
(3) Measure the resistance between the connector terminals on the vehicle wiring harness side.

Resistance

Inspection terminals	Inspection conditions	Standard value
D6-11 (LSFD) - E3-8 (LSSR)	Always	Less than 1 Ω
E3-7 (E) - chassis ground	Always	Less than 1 Ω
E3-8 (LSSR) - chassis ground	Always	10 kΩ or more

NG → Repair or replacement of wiring harness or connector

OK

Replacement of the main body ECM (multiplex network body computer) (Refer to PD - 25)

Front door courtesy light switch circuit

Circuit description
The main body ECM (multiplex network body computer) is detecting the front door courtesy light switch signal.

Circuit figure

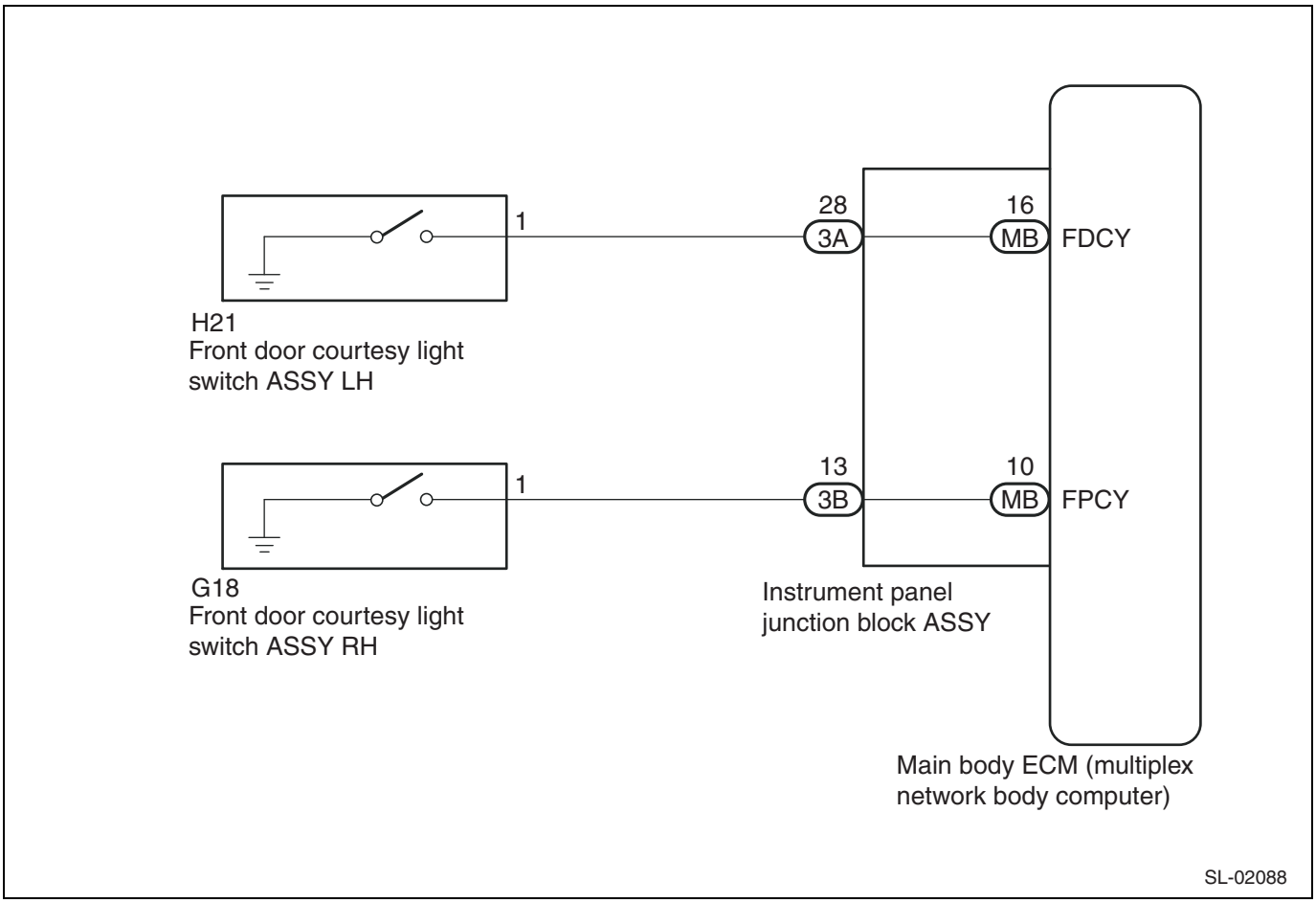

LI

Inspection steps

1	Reading of SSM4 data monitor (courtesy light switch)

(1) On the SSM4, navigate to the [Data monitor] display, and check the computer data. (Refer to LI - 17)

Criteria: The normal value on the data monitor is displayed properly.

SSM4 screen: [Each System] →[Body Control] →[Data monitor]

Item name	Description/display range	Normal value	Remarks
[D Door Courtesy]	Status of the front door courtesy light switch ASSY LH Display range: [Close]-[Open]	[Close]: Close the driver's door. [Open]: Open the driver's door.	-
[P Door Courtesy]	Status of the front door courtesy light switch ASSY RH Display range: [Close]-[Open]	Closed: Close the passenger's door. Open: Open the passenger's door.	-

Result

Result	Go to
OK	A
NG (The courtesy light switch of the driver's side door does not operate.)	B

Result	Go to
NG (The courtesy light switch of the passenger's side door does not operate.)	C

B → Go to Step 2.

C → Go to Step 5.

A

See the next circuit for inspection shown on the symptom table. (Refer to LI - 7)

2 Unit inspection of the front door courtesy light switch ASSY RH

(1) Remove the front door courtesy light switch ASSY RH. (Refer to LI - 59)
(2) Perform the unit inspection of the front door courtesy light switch ASSY RH. (Refer to LI - 60)
Criteria: The inspection result shows the normal status.

NG → Replacement of the front door courtesy light switch ASSY RH (Refer to LI - 59)

OK

3 Inspection of the wiring harness and the connector (front door courtesy light ASSY RH - instrument panel junction block ASSY)

NOTE:
For inspection procedures and precautions, refer to IN - 36.
(1) Disconnect the connector G18 of the front door courtesy light switch ASSY RH.
(2) Disconnect the connector 3B of the instrument panel junction block ASSY.
(3) Measure the resistance between the connector terminals on the vehicle wiring harness side.

Resistance

Inspection terminals	Inspection conditions	Standard value
G18-1 - 3B-13	Always	Less than 1 Ω
G18-1 - Chassis ground	Always	10 kΩ or more

NG → Repair or replacement of wiring harness or connector

OK

4 Inspection of the instrument panel junction block ASSY.

NOTE:
For inspection procedures and precautions, refer to IN - 36.
(1) Remove the instrument panel junction block ASSY from the vehicle. (Refer to PD - 25)

(2) Measure the resistance between the terminals.
(3) Remove the main body ECM (multiplex network body computer) from the instrument panel junction block ASSY.

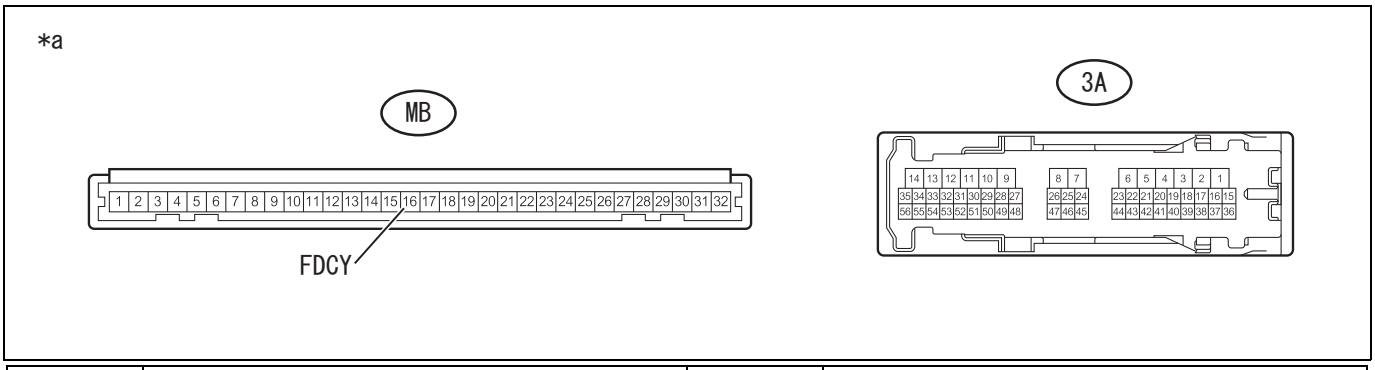

*a	Connector not connected (Instrument panel junction block ASSY)	-	-

Resistance

Inspection terminals	Inspection conditions	Standard value
3B-13 - MB-10 (FPCY)	Always	Less than 1 Ω

LI

NG → Replacement of the instrument panel junction block ASSY (Refer to PD - 25)

OK

Replacement of the main body ECM (multiplex network body computer) (Refer to PD - 25)

5	Unit inspection of the front door courtesy light switch ASSY LH

(1) Remove the front door courtesy light switch ASSY LH. (Refer to LI - 59)
(2) Perform the unit inspection of the front door courtesy light switch ASSY LH. (Refer to LI - 60)
Criteria: The inspection result shows the normal status.

NG → Replacement of the front door courtesy light switch ASSY LH (Refer to LI - 59)

OK

6	Inspection of the wiring harness and the connector (front door courtesy light switch ASSY LH - instrument panel junction block ASSY)

NOTE:
For inspection procedures and precautions, refer to IN - 36.
(1) Disconnect the connector H21 of the front door courtesy light switch ASSY LH.
(2) Disconnect the connector 3A of the instrument panel junction block ASSY.
(3) Measure the resistance between the connector terminals on the vehicle wiring harness side.

Resistance

Inspection terminals	Inspection conditions	Standard value
H21-1 - 3A-28	Always	Less than 1 Ω
H21-1 - chassis ground	Always	10 kΩ or more

NG → Repair or replacement of wiring harness or connector

OK

7	Inspection of the instrument panel junction block ASSY.

NOTE:
For inspection procedures and precautions, refer to IN - 36.
(1) Remove the instrument panel junction block ASSY from the vehicle. (Refer to PD - 25)
(2) Remove the main body ECM (multiplex network body computer) from the instrument panel junction block ASSY.
(3) Measure the resistance between the terminals.

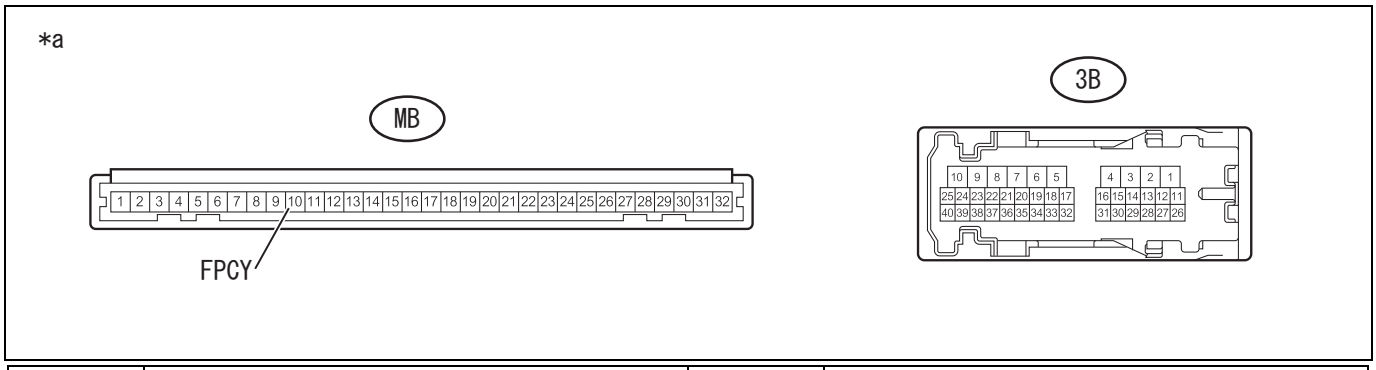

*a	Connector not connected (Instrument panel junction block ASSY)	-	-

Resistance

Inspection terminals	Inspection conditions	Standard value
3A-28 - MB-16 (FDCY)	Always	Less than 1 Ω

NG → Replacement of the instrument panel junction block ASSY (Refer to PD - 25)

OK

Replacement of the main body ECM (multiplex network body computer) (Refer to PD - 25)

Trunk courtesy light switch circuit

Circuit description
The main body ECM (multiplex network body computer) is detecting the courtesy switch signal of the trunk lock ASSY.

Circuit figure

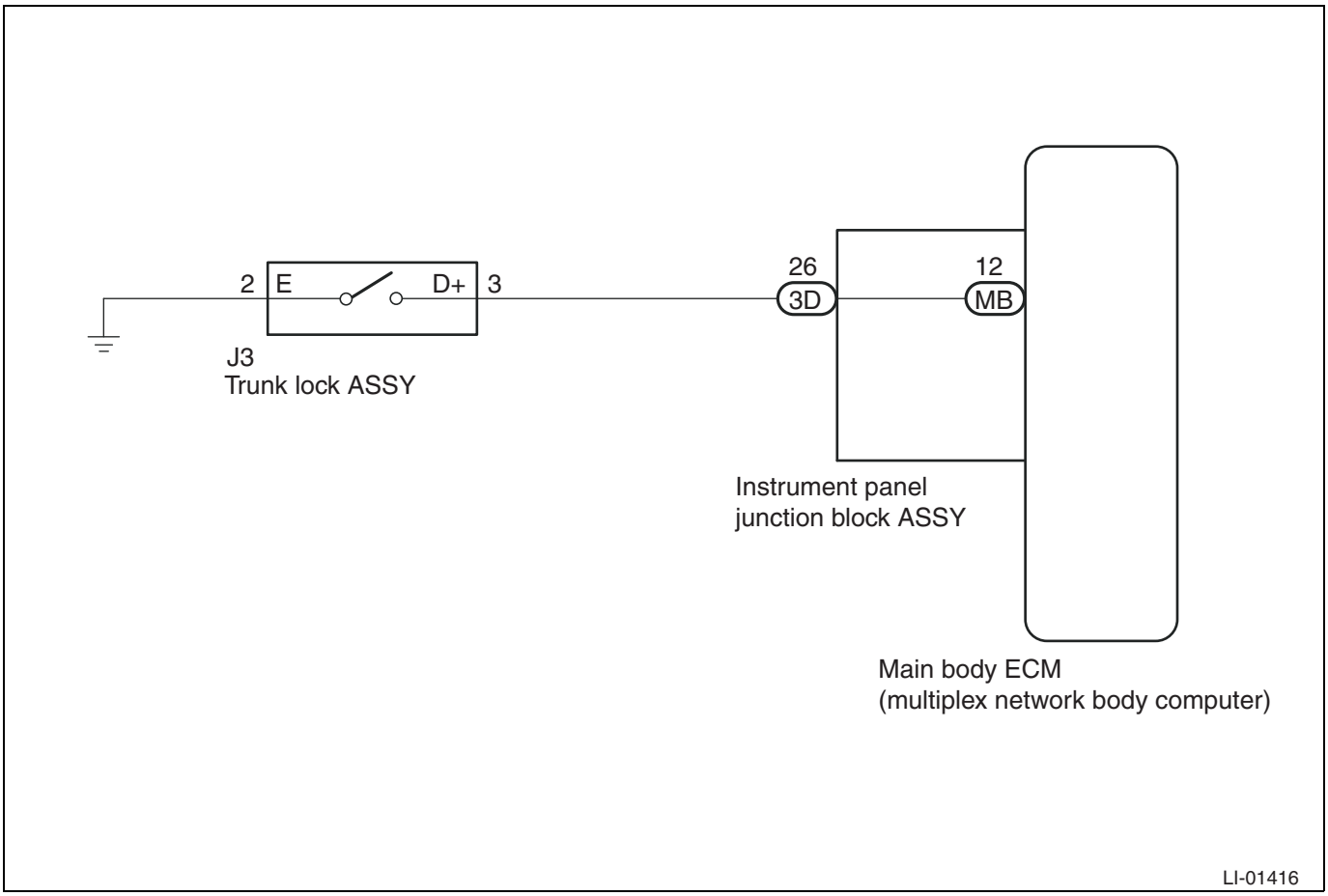

LI

Inspection steps

1	Reading of SSM4 data monitor

(1) On the SSM4, navigate to the [Data monitor] display, and check the computer data. (Refer to LI - 17)

SSM4 screen: [Each System] →[Body Control] →[Data monitor]

Item name	Description/display range	Normal value	Remarks
[Luggage Courtesy SW]	Status of the trunk lock ASSY Display range: [Close]-[Open]	Closed: The trunk door is closed. Open: The trunk door is open.	-

Criteria: The normal value on the data monitor is displayed properly.

NG → Go to Step 2.

OK →

See the next circuit for inspection shown on the symptom table. (Refer to LI - 7)

2	Inspection of the trunk lock ASSY

(1) Remove the trunk lock ASSY. (Refer to DL - 105)

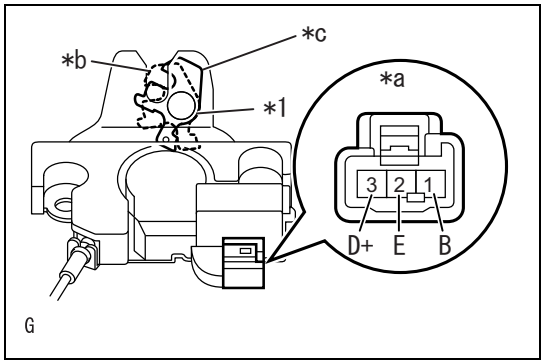

(2) Check the resistance between the connector terminals.
Resistance

Inspection terminals	Inspection conditions	Standard value
3 (D+) - 2 (E)	Open	Less than 1 Ω
3 (D+) - 2 (E)	Locked	10 kΩ or more

Captions in illustration

*a	Connector not connected (trunk lock ASSY)
*b	Locked
*c	Open

NG → Replacement of the trunk lock ASSY (Refer to DL - 105)

OK

3	Inspection of the wiring harness and the connector (trunk lock ASSY - instrument panel junction block ASSY and chassis ground)

NOTE:
For inspection procedures and precautions, refer to IN - 36.
(1) Disconnect the connector 3D of the instrument panel junction block ASSY.
(2) Disconnect the connector J3 of the trunk lock ASSY.
(3) Measure the resistance between the connector terminals on the vehicle wiring harness side.
Resistance

Inspection terminals	Inspection conditions	Standard value
J3-3 (D+) - 3D-26	Always	Less than 1 Ω
J3-3 (D+) - chassis ground	Always	10 kΩ or more
J3-2 (E) - chassis ground	Always	Less than 1 Ω

NG → Repair or replacement of wiring harness or connector

OK

4	Inspection of the instrument panel junction block ASSY.

NOTE:
For inspection procedures and precautions, refer to IN - 36.
(1) Remove the instrument panel junction block ASSY from the vehicle. (Refer to PD - 25)
(2) Remove the main body ECM (multiplex network body computer) from the instrument panel junction block ASSY.
(3) Measure the resistance between the terminals.

LI

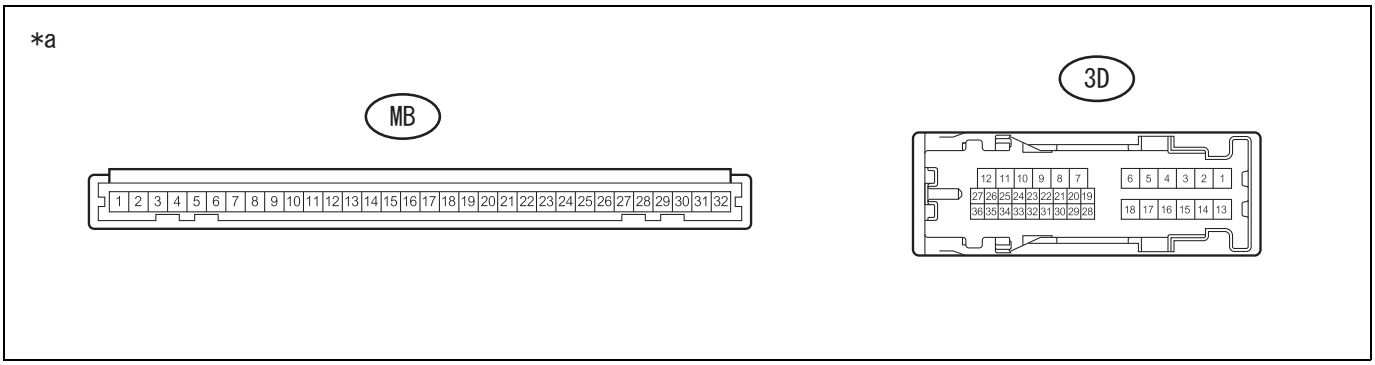

Captions in illustration

*a	Connector not connected (Instrument panel junction block ASSY)	-	-

Resistance

Inspection terminals (Terminal symbol)	Inspection conditions	Standard value
3D-26 - MB-12	Always	Less than 1 Ω

LI

NG → Replacement of the instrument panel junction block ASSY (Refer to PD - 25)

OK

Replacement of the main body ECM (multiplex network body computer) (Refer to PD - 25)

Interior illumination circuit

Circuit description

The main body ECM (multiplex network body computer) controls the map light ASSY to illuminate.

Circuit figure

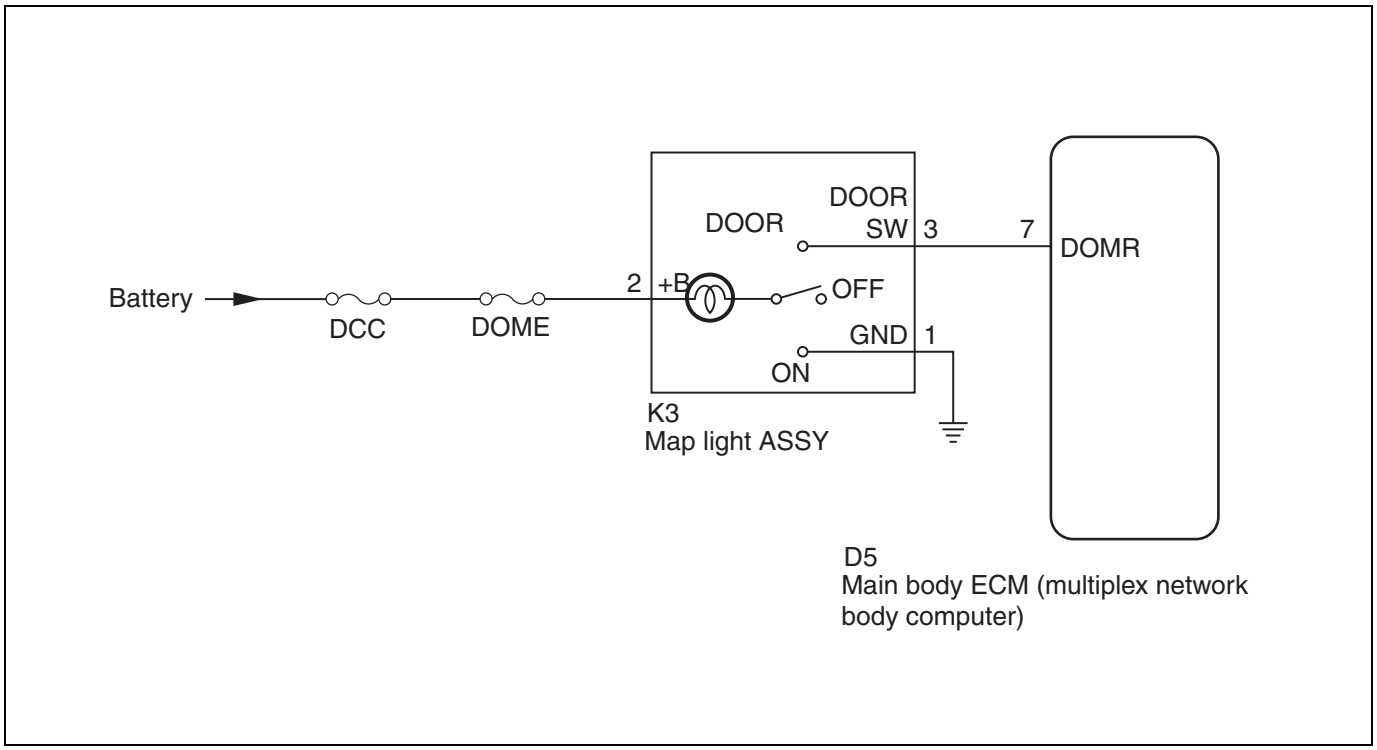

LI

Inspection steps

CAUTION:

Before performing the troubleshooting, check the bulbs and the fuses of this circuit.

1	Implementation of SSM4 active test (map light)

(1) Using SSM4, perform an [Active Test] by following the display. (Refer to LI - 17)

SSM4 screen: [Each System] →[Body Control] →[Active Test]

Item name	Item description	Drive
[Illuminated Entry System]	The lights controlled by the illuminated entry system are turned on	OFF/ON

Criteria: The work support can be performed properly.

NOTE:

Perform the inspection with the change switch of the map light ASSY set to the DOOR mode.

NG → Go to Step 2.

OK

Go to related circuit inspection listed in symptom table (Refer to LI - 7).

2	Unit inspection of the map light ASSY

(1) Remove the map light ASSY. (Refer to LI - 48)

(2) Perform the unit inspection of the map light ASSY. (Refer to LI - 50)

NG → Replacement of the map light ASSY (Refer to LI - 48)

OK

3	Inspection of the wiring harness and the connector (map light ASSY - battery)

NOTE:
For inspection procedures and precautions, refer to IN - 36.
(1) Disconnect the connector K3 of the map light ASSY.

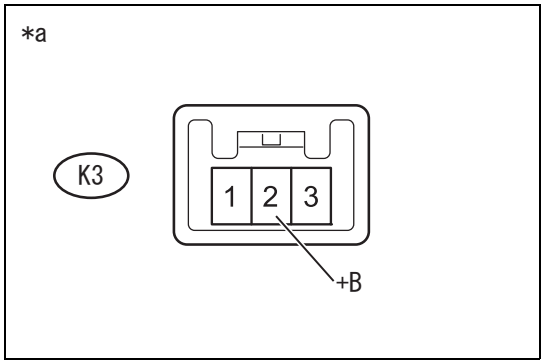

(2) Measure the voltage between the connector terminals on the vehicle wiring harness side.
Voltage

Inspection terminals	Inspection conditions	Standard value
K3-2 (+B) - chassis ground	Always	11 to 14V

Captions in illustration

*a	Front side of vehicle wiring harness connector (map light ASSY connector)

NG → Repair or replacement of wiring harness or connector

LI

OK

4	Inspection of the wiring harness and the connector (map light ASSY - main body ECM (multiplex network body computer))

NOTE:
For inspection procedures and precautions, refer to IN - 36.
(1) Disconnect the connector K3 of the map light ASSY.
(2) Disconnect the connector D5 of the main body ECM (multiplex network body computer).
(3) Measure the resistance between the connector terminals on the vehicle wiring harness side.
Resistance

Inspection terminals	Inspection conditions	Standard value
K3-3 (DOOR SW) - D5-7 (DOMR)	Always	Less than 1 Ω
D5-7 (DOMR) - chassis ground	Always	10 kΩ or more

NG → Repair or replacement of wiring harness or connector

OK

Replacement of the main body ECM (multiplex network body computer) (Refer to PD - 25)

Ignition key cylinder light circuit

Circuit description
The main body ECM (multiplex network body computer) controls the transponder key amplifier (key cylinder light) to illuminate.

Circuit figure

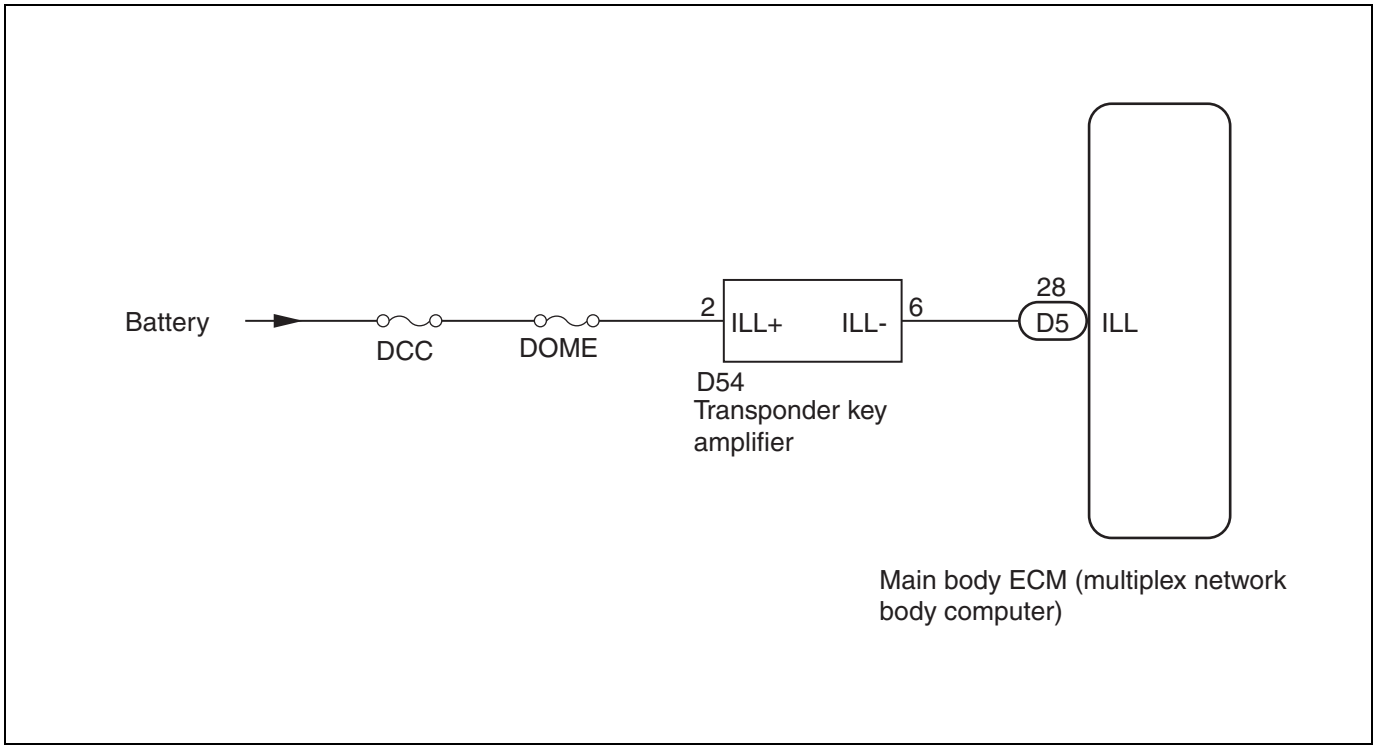

LI

Inspection steps

CAUTION:

Before performing the troubleshooting, check the fuses and the lights of this circuit.

1	Implementation of SSM4 active test

(1) Using SSM4, display the [Active Test] screen according to the screen and check the computer data. (Refer to LI - 17)

SSM4 screen: [Each System] →[Body Control] →[Active Test]

Item name	Item description	Drive
[Key illumi. Lamp]	Turn on the key cylinder light	ON/OFF

Criteria: The work support can be performed properly.

NG → Go to Step 2.

OK

See the next circuit for inspection shown on the symptom table. (Refer to LI - 7)

2	Unit inspection of the transponder key amplifier

(1) Remove the transponder key amplifier. (Refer to TD - 337)

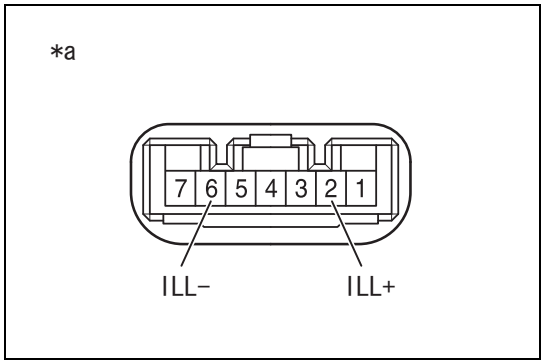

(2) Check that the transponder key amplifier light illuminates.
  (a) Inspect if the light turns on when battery voltage is applied to each connector terminal.

Criteria

Battery connection	Criteria
Battery positive terminal →2 (ILL+) Battery ground terminal →6 (ILL-)	Light turns on.

Captions in illustration

*a	Connector not connected (transponder key amplifier)

NG → Replacement of the transponder key amplifier (Refer to TD - 337)

OK

3	Inspection of the wiring harness and the connector (transponder key amplifier - battery)

LI

NOTE:
For inspection procedures and precautions, refer to IN - 36.

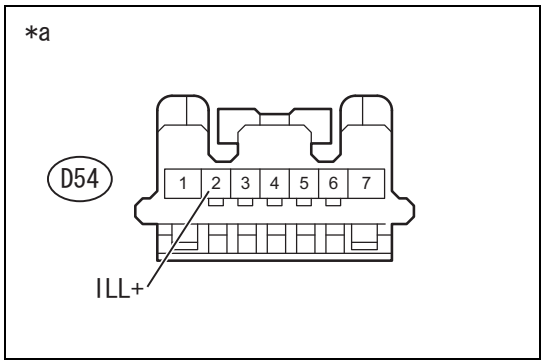

(1) Disconnect the connector D54 of the transponder key amplifier.
(2) Measure the voltage between the connector terminals on the vehicle wiring harness side.

Voltage

Inspection terminals	Inspection conditions	Standard value
D54-2 (ILL+) - chassis ground	Always	11 to 14 V

Captions in illustration

*a	Front side of vehicle wiring harness connector (transponder key amplifier connector)

NG → Repair or replacement of wiring harness or connector

OK

4	Inspection of the wiring harness and the connector (transponder key amplifier - main body ECM (multiplex network body computer))

NOTE:
For inspection procedures and precautions, refer to IN - 36.
(1) Disconnect the connector D54 of the transponder key amplifier.
(2) Disconnect the connector D5 of the main body ECM (multiplex network body computer).
(3) Measure the resistance between the connector terminals on the vehicle wiring harness side.

Resistance

Inspection terminals (Terminal symbol)	Inspection conditions	Standard value
D54-6 (ILL-) - D5-28 (ILL)	Always	Less than 1 Ω
D5-28 (ILL) - chassis ground	Always	10 kΩ or more

NG → Repair or replacement of wiring harness or connector

OK

Replacement of the main body ECM (multiplex network body computer) (Refer to PD - 25)

Vanity light

Exploded view

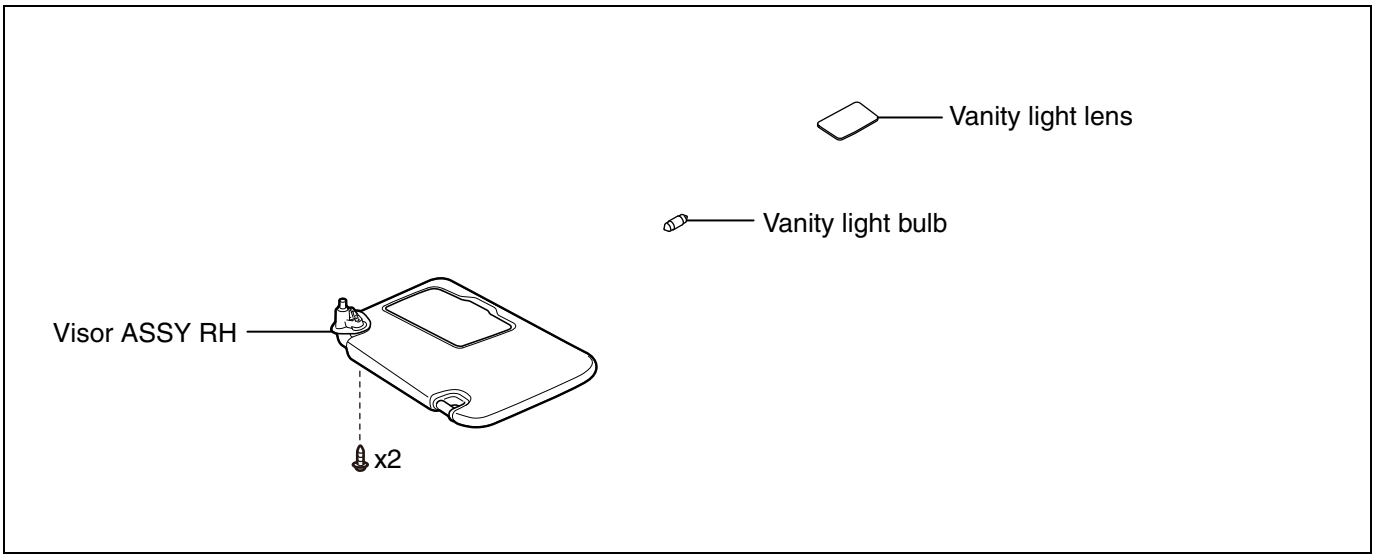

LI

Removal

NOTE:

The procedures described below are for the RH side. Perform the same procedures for the LH side.

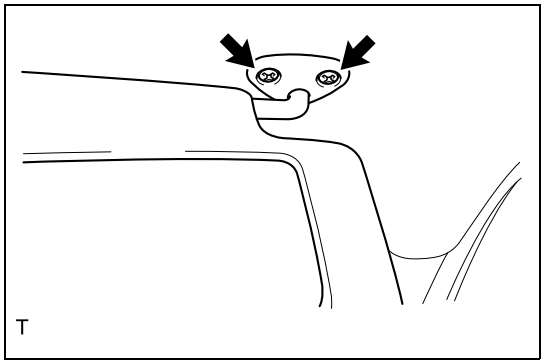

1. Removal of visor ASSY RH
   (1) Remove the 2 screws.
   (2) Disconnect the visor ASSY RH from the hook.

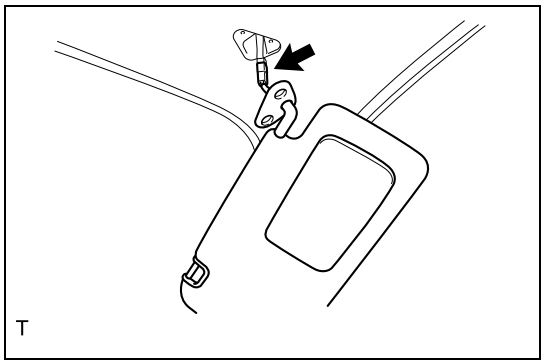

   (3) Disconnect the connector and remove the visor ASSY RH.

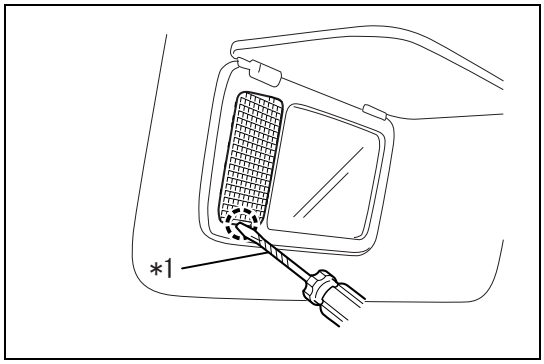

2. Removal of the vanity light lens
   (1) Release the claws by using a flat tip screwdriver wrapped with protective tape, and remove the vanity light lens.

Captions in illustration

*1	Protective tape

3. Removal of the vanity light bulb
   (1) Remove the vanity light bulb from the visor ASSY RH.

Installation

NOTE:

The procedures described below are for the RH side. Perform the same procedures for the LH side.

1. Installation of the vanity light bulb
   (1) Install the vanity light bulb to the visor ASSY RH.

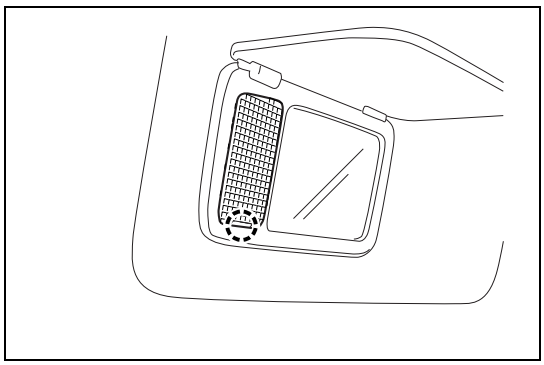

2. Installation of the vanity light lens
   (1) Engage the claws and install the vanity light lens.

3. Installation of visor ASSY RH
   (1) Connect the connector.
   (2) Place the visor ASSY RH on the hook.
   (3) With the 2 screws, install the visor ASSY RH.

Unit inspection

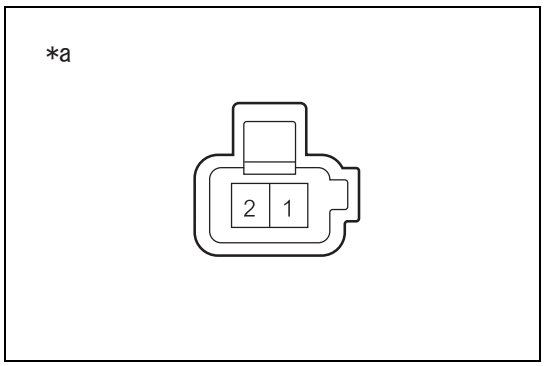

1. Inspection of the visor ASSY RH
   (1) Measure the resistance between the connector terminals when the visor ASSY RH (vanity light switch) is operated.
   Resistance

Inspection terminals	Inspection conditions	Standard value
1 - 2	Mirror cover closed	10 kΩ or more
1 - 2	Mirror cover opened	Less than 1 Ω

Captions in illustration

*a	Connector not connected (visor ASSY RH)

Personal map light

Exploded view

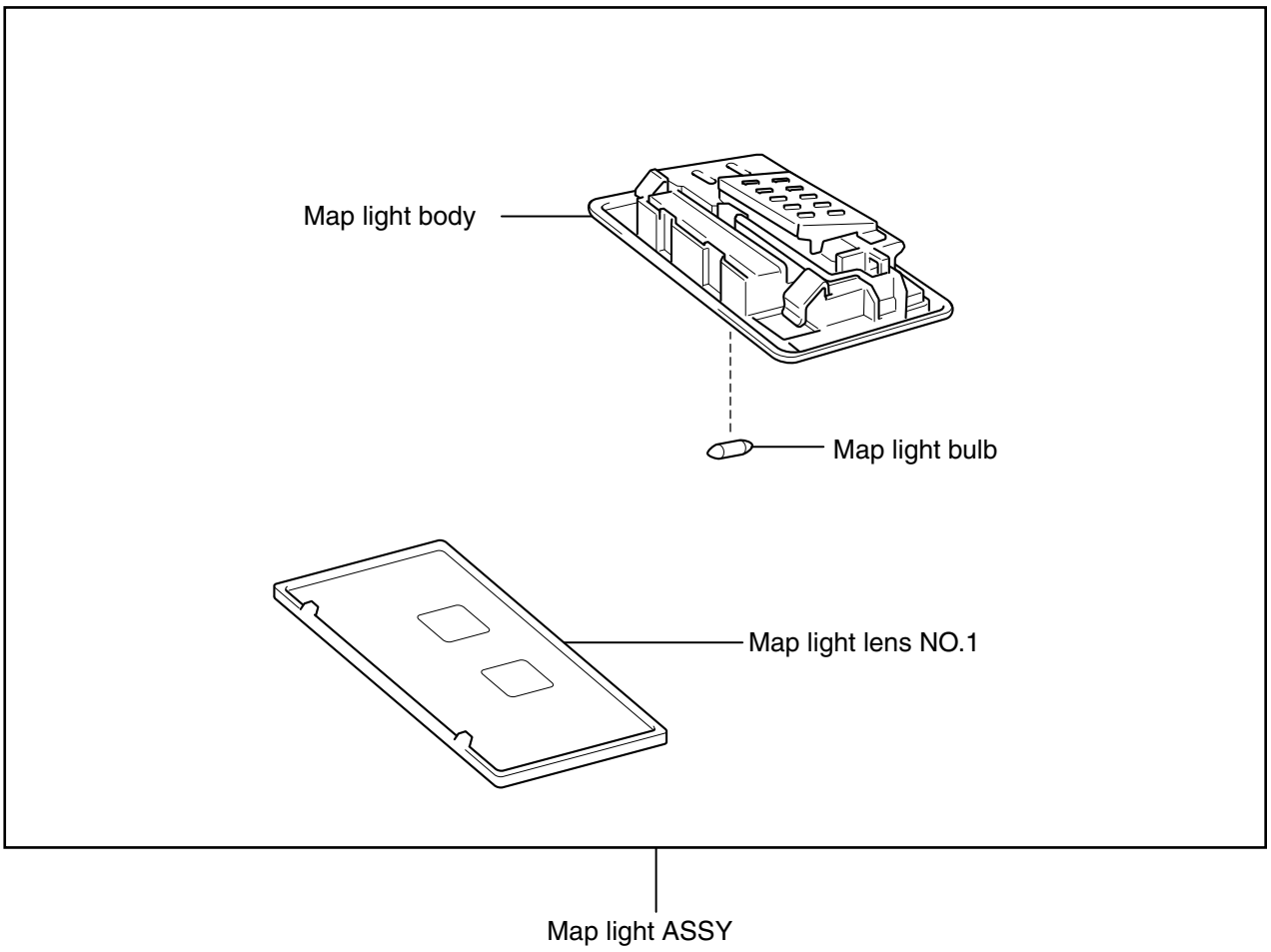

T

Removal

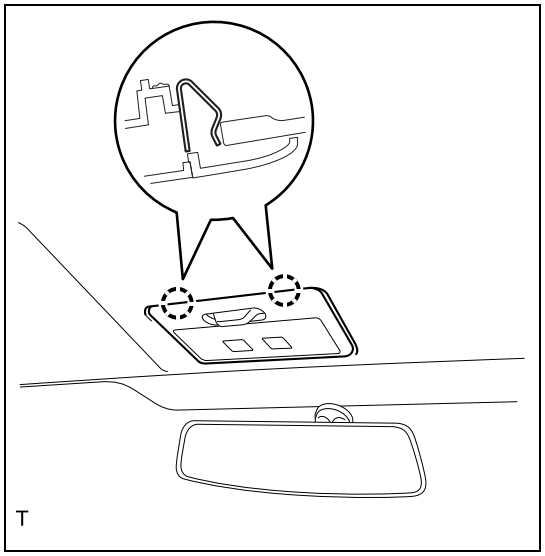

T

1. Removal of the map light ASSY
   (1) Release the 2 tabs.

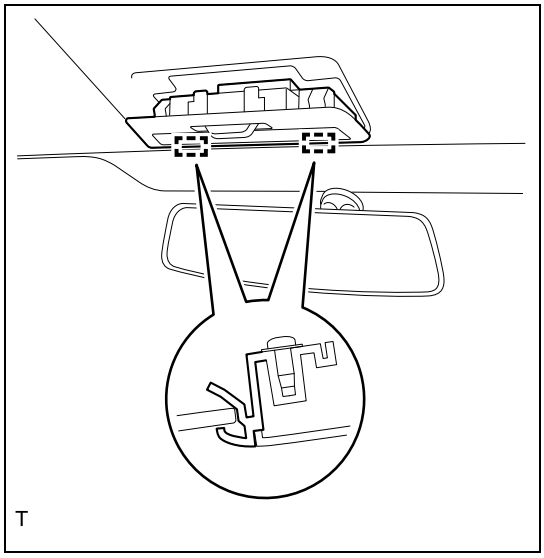

(2) Release two guides and disconnect the map light ASSY.

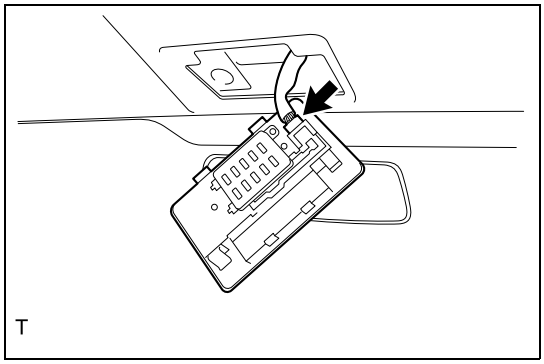

(3) Disconnect the connector and remove the map light ASSY.

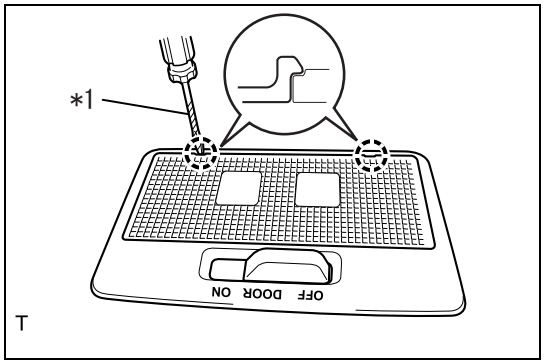

2. Removal of the map light lens NO.1
   (1) Release two claws by using a fine flat tip screwdriver wrapped with protective tape, and remove the map light lens NO.1.

Captions in illustration

*1	Protective tape

3. Removal of the map light bulb
   (1) Remove the map light bulb.

Installation

1. Installation of the map light bulb
   (1) Install the map light bulb.
2. Installation of the map light lens NO.1
   (1) Engage two claws and install the map light lens NO.1.
3. Installation of the map light ASSY
   (1) Connect the connector.
   (2) Insert two guides.
   (3) Engage two claws and install the map light ASSY.

Unit inspection

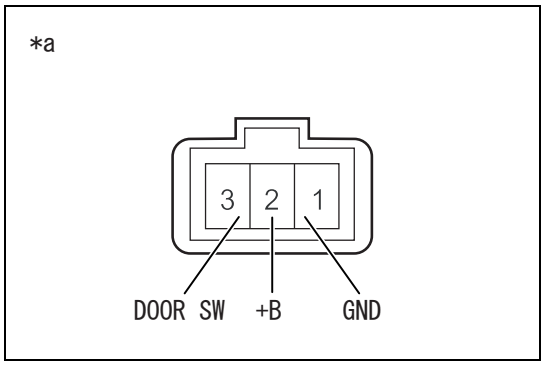

1. Inspection of the map light ASSY
   (1) Illumination condition check for the map light
      (a) Check the illumination condition of the map light when battery voltage is applied between the connector terminals.

Criteria

Battery connection	Inspection conditions	Criteria
Battery positive terminal →2(+B) Battery ground terminal →1(GND)	Map light switch ON	The map light illuminates.
Battery positive terminal →2(+B) Battery ground terminal →3(DOOR SW)	Map light switch DOOR	The map light illuminates.

Captions in illustration

*a	Connector not connected (map light ASSY)

Trunk room light

Exploded view

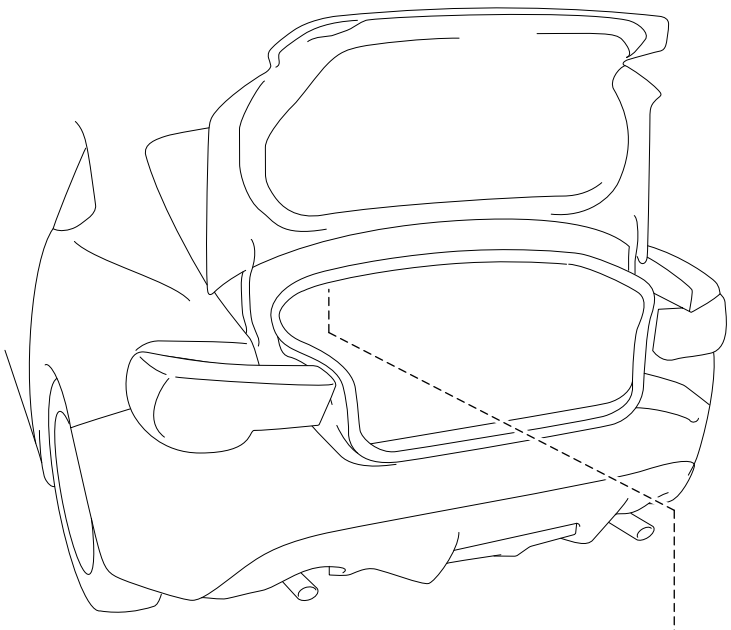

Trunk light ASSY NO.1

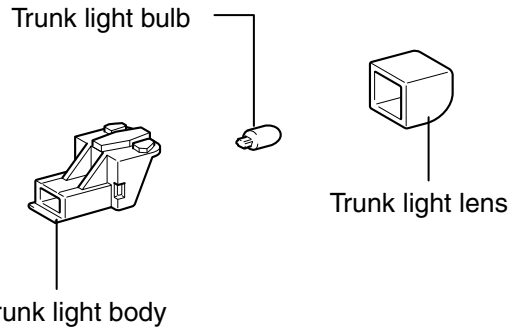

LI-01589

Removal

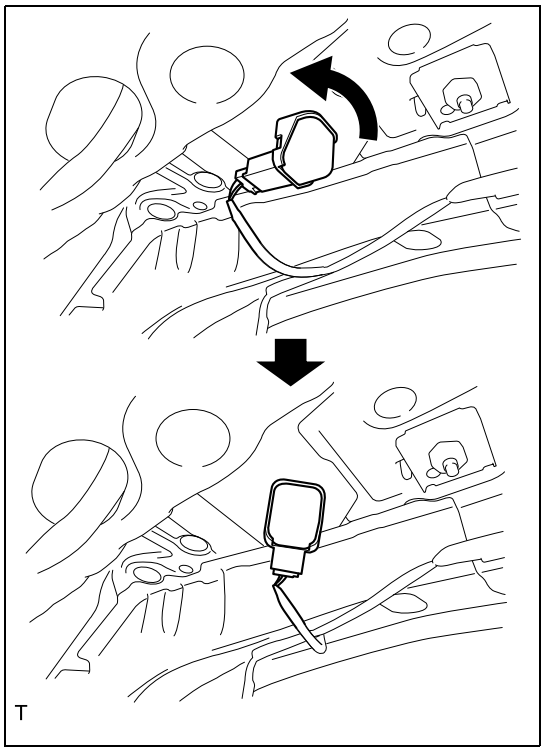

1. Removal of the trunk light ASSY NO.1
   (1) Rotate the trunk light ASSY NO.1 as shown in the figure, and disconnect the trunk light ASSY NO.1 from the vehicle.

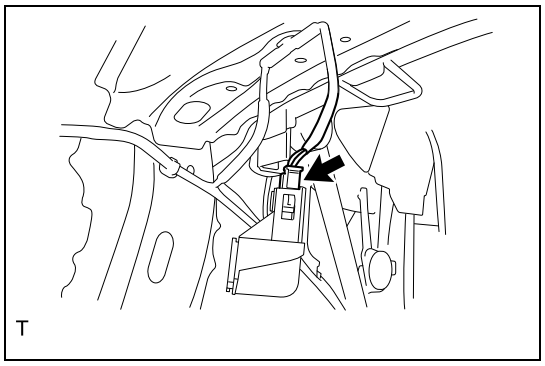

   (2) Disconnect the connector and remove the trunk light ASSY NO.1.

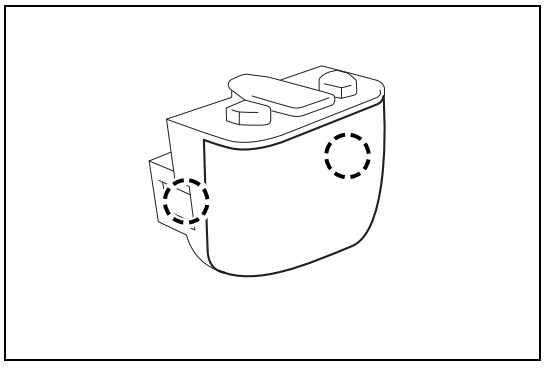

2. Removal of the trunk light lens
   (1) Release two claws and remove the trunk light lens.

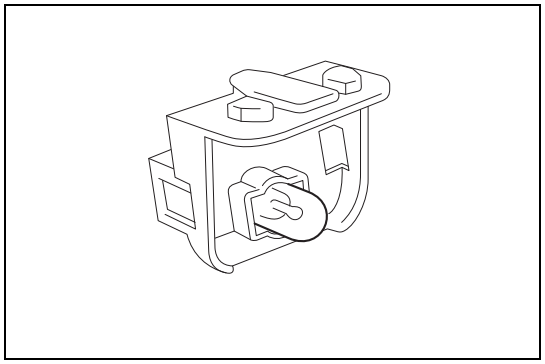

3. Removal of the trunk bulb
   (1) Remove the trunk light valve.

Installation

1. Installation of the trunk light bulb
   (1) Install the trunk light valve.
2. Installation of the trunk light lens
   (1) Engage two claws and install the trunk light lens.

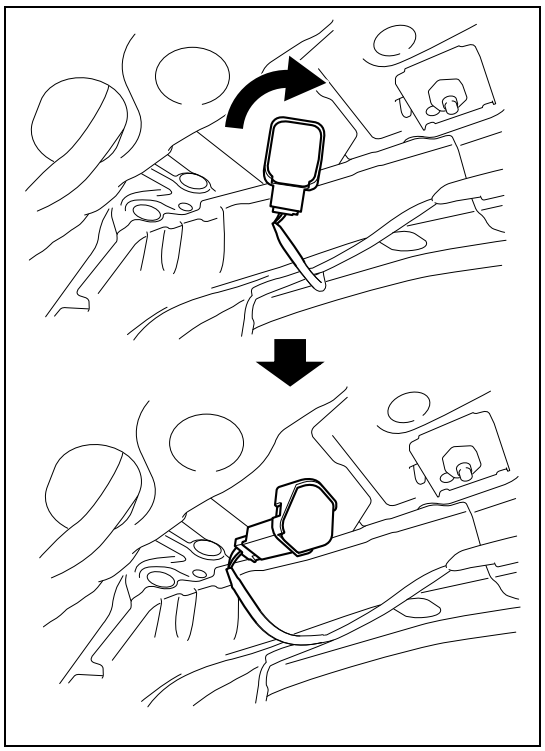

3. Installation of the trunk light ASSY NO.1
   (1) Connect the connector.
   (2) Rotate the trunk light ASSY NO.1 as shown in the figure, and install the trunk light ASSY NO.1.

LI

Unit inspection

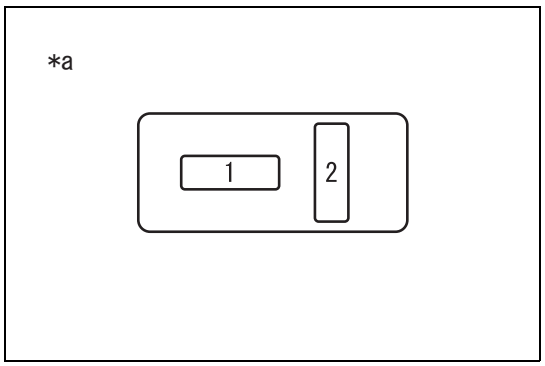

1. Inspection of the trunk light ASSY NO.1
   (1) Check the illumination condition when battery voltage is applied between the connector terminals.

Criteria

Inspection terminals	Inspection conditions	Criteria
1 - 2	Battery positive →1 Battery ground →2	Light turns on.

Captions in illustration

*a	Connector not connected (trunk light ASSY NO.1)

NOTE:
Perform the inspection using a properly functioning bulb.

Door courtesy light (installed to the front side)

Exploded view

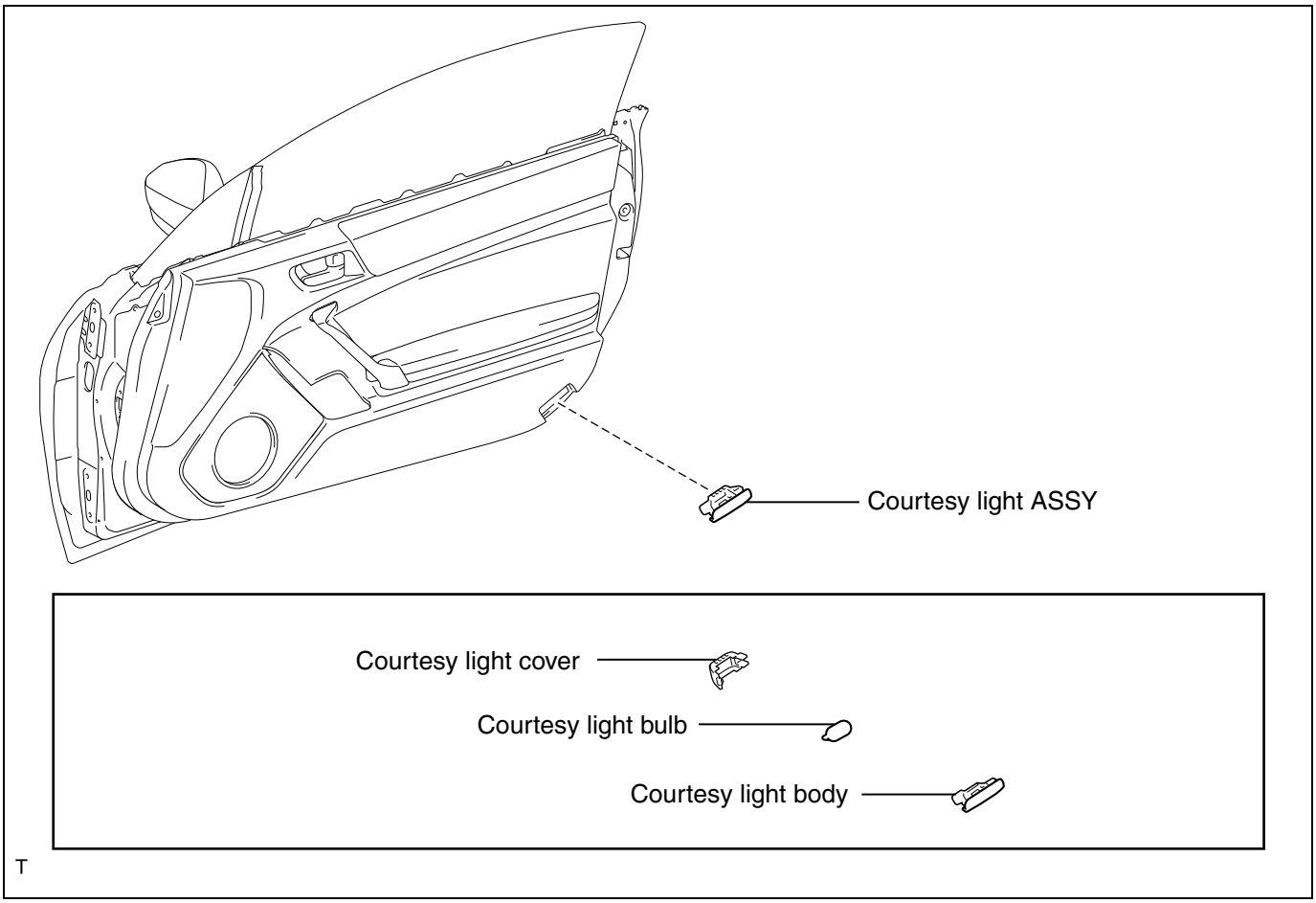

Removal

NOTE:

The procedures described below are for the RH side. Perform the same procedures for the LH side.

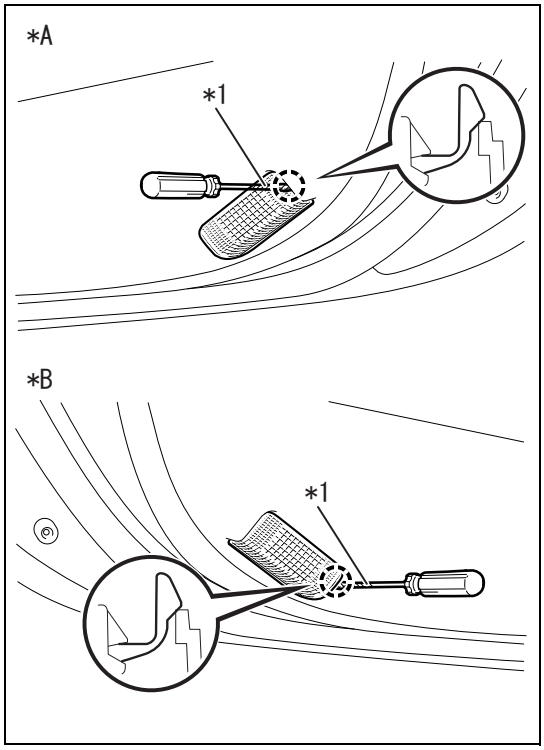

1. Removal of the courtesy light ASSY
   (1) Using a flat head screw driver wrapped in protective tape, release the tab.

Captions in illustration

*A	Installation location on the passenger's side
*B	Installation location on the driver's side
*1	Protective tape

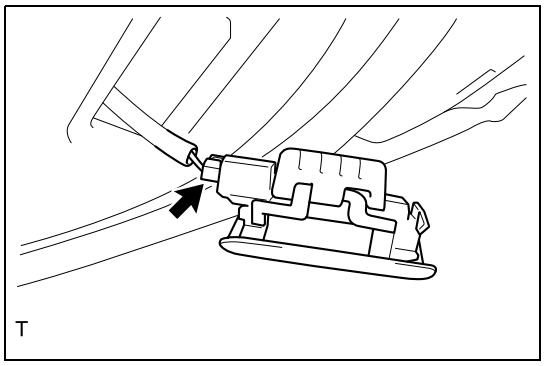

(2) Disconnect the connector and remove the courtesy light ASSY.

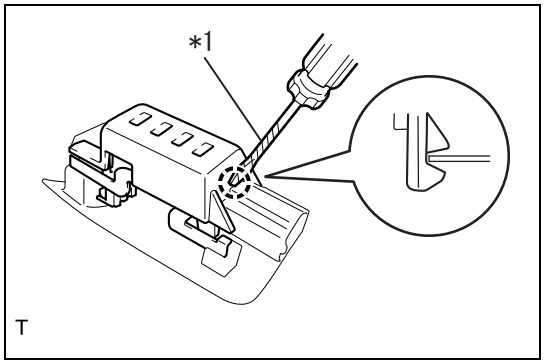

2. Removal of the courtesy light bulb
   (1) Release the claws by using a flat tip screwdriver wrapped with protective tape, and remove the courtesy light cover.

Captions in illustration

*1	Protective tape

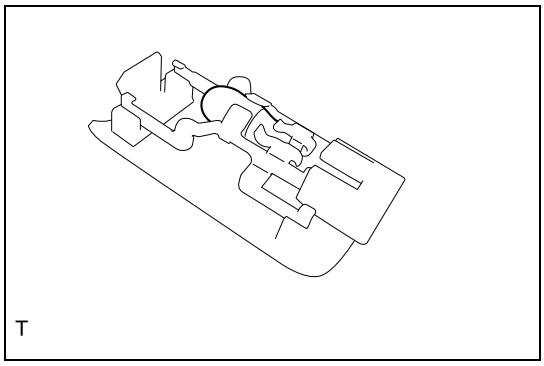

(2) Remove the courtesy light bulb.

Installation

NOTE:

The procedures described below are for the RH side. Perform the same procedures for the LH side.

1. Installation of the courtesy light bulb
   (1) Install the courtesy light bulb.
   (2) Engage the claws and install the courtesy light cover.
2. Installation of the courtesy light ASSY
   (1) Connect the connector.

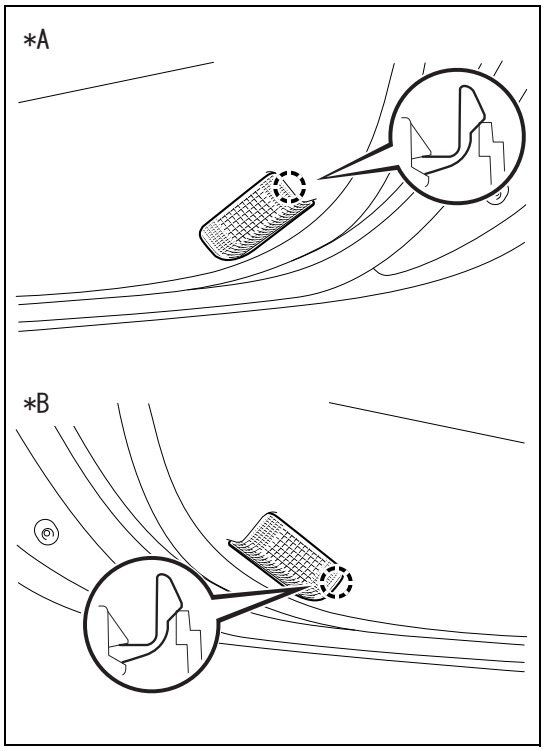

(2) Engage the claws and install the courtesy light ASSY.

Captions in illustration

*A	Installation location on the passenger's side
*B	Installation location on the driver's side

Unit inspection

NOTE:

The procedures described below are for the RH side. Perform the same procedures for the LH side.

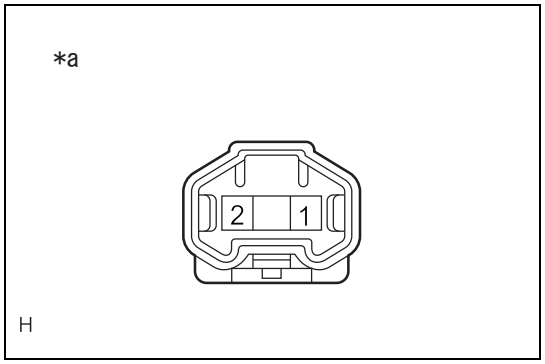

1. Inspection of the courtesy light ASSY
   (1) Light inspection
      (a) Inspect if the light turns on when battery voltage is applied to each connector terminal.

Criteria

Inspection terminals	Battery connection	Criteria
1 - 2	Battery positive →1 Battery ground →2	Light turns on.

Captions in illustration

*a	Connector not connected (courtesy light ASSY)

Ignition key cylinder light

Exploded view

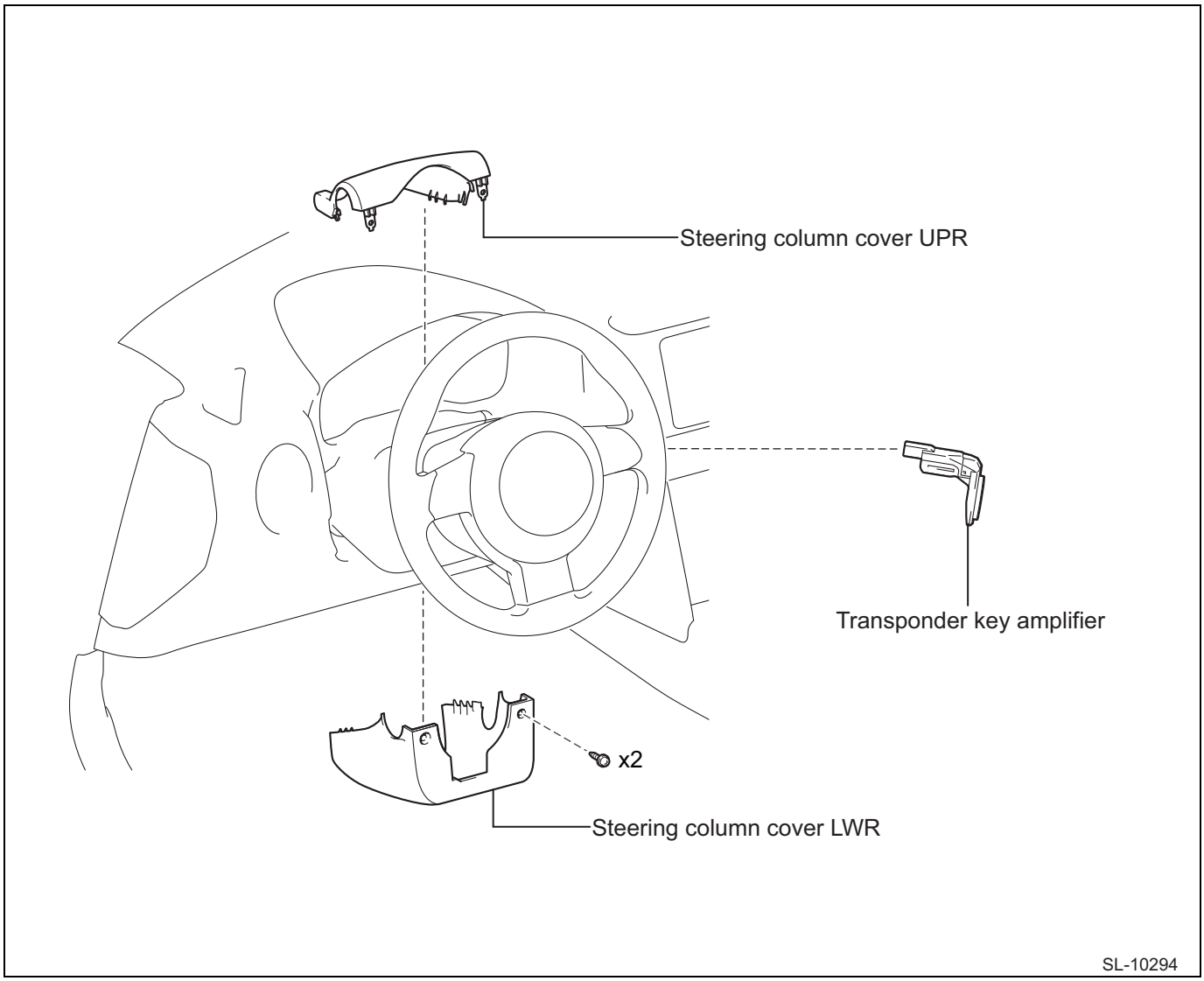

Removal

1. Removal of the steering column cover LWR (Refer to WW - 22)
2. Removal of the steering column cover UPR (Refer to WW - 23)

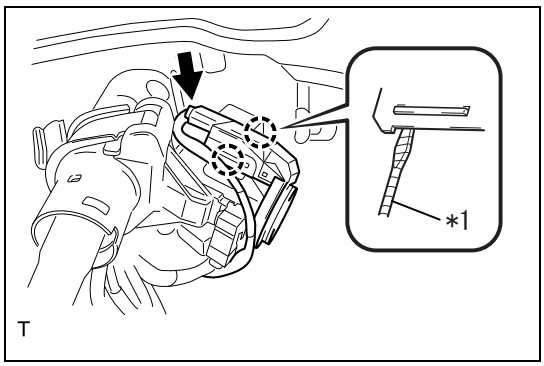

3. Removal of the transponder key amplifier
   (1) Disconnect the connector.
   (2) Release the two claws by using a fine flat tip screwdriver wrapped with protective tape, and remove the transponder key amplifier.

Captions in illustration

*1	Protective tape

Installation

1. Installation of the transponder key amplifier
   (1) Engage two claws and install the transponder key amplifier.

(2) Connect the connector.

2. Installation of the steering column cover UPR (Refer to WW - 23)
3. Installation of the steering column cover LWR (Refer to WW - 23)

Unit inspection

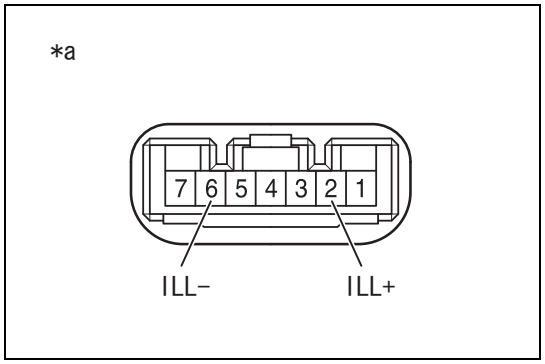

1. Inspection of the transponder key amplifier
   (1) Light inspection
      (a) Inspect if the light turns on when battery voltage is applied to each connector terminal.

Criteria

Battery connection	Criteria
Battery positive terminal →2 (ILL+) Battery ground terminal →6 (ILL-)	Light turns on.

Captions in illustration

*a	Connector not connected (transponder key amplifier)

Front door courtesy switch

Exploded view

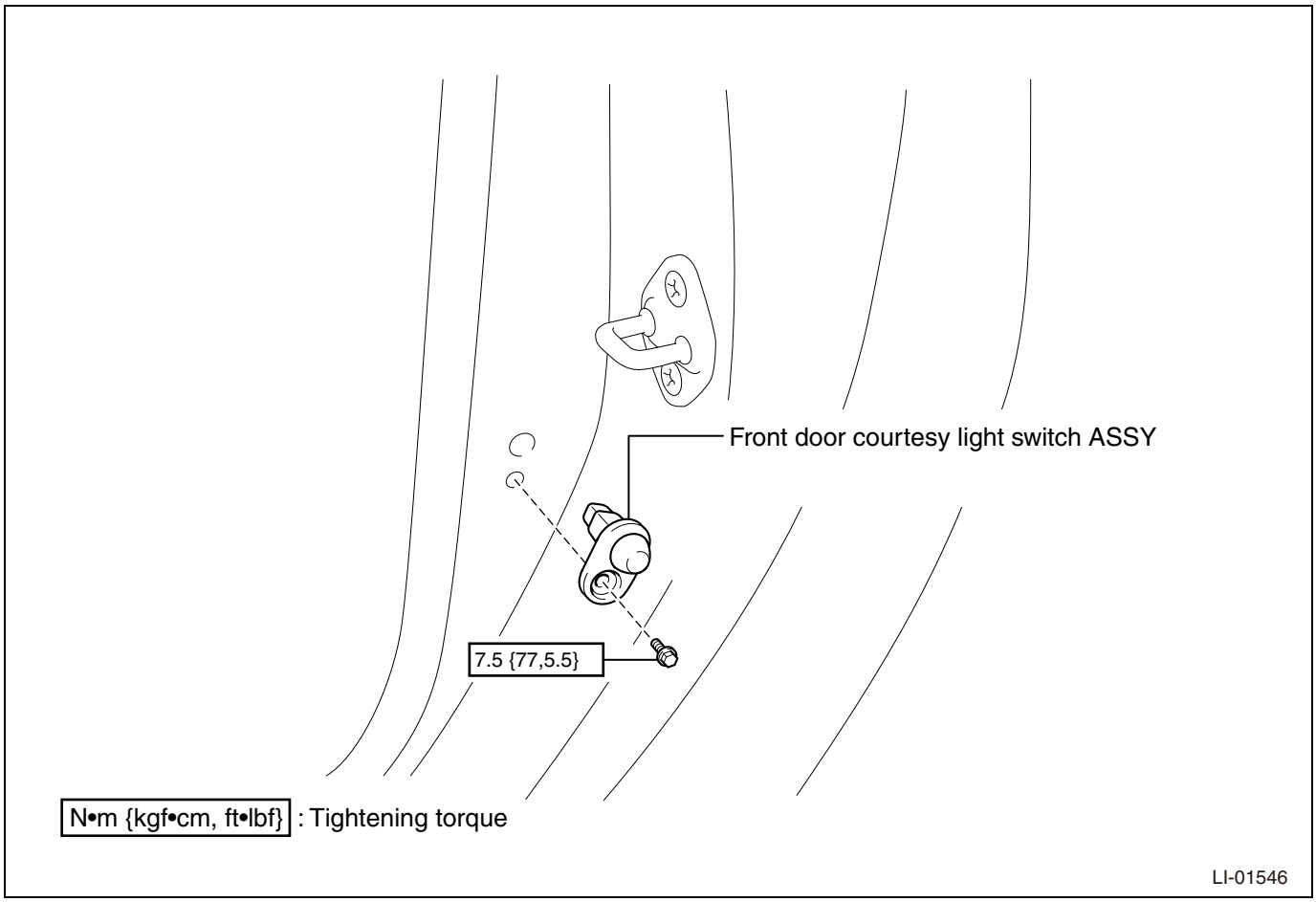

Removal

NOTE:

The following procedure is for LH side. Perform the same procedures for the RH side.

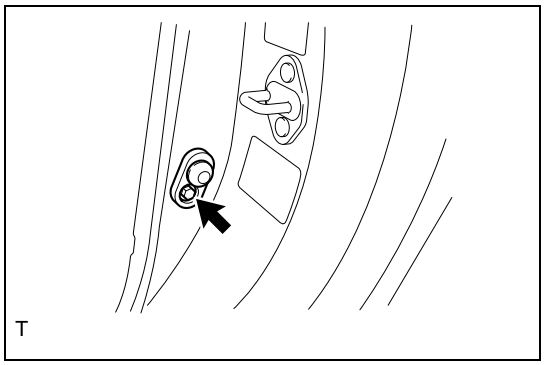

1. Removal of the front door courtesy light switch ASSY
   (1) Remove the bolt.

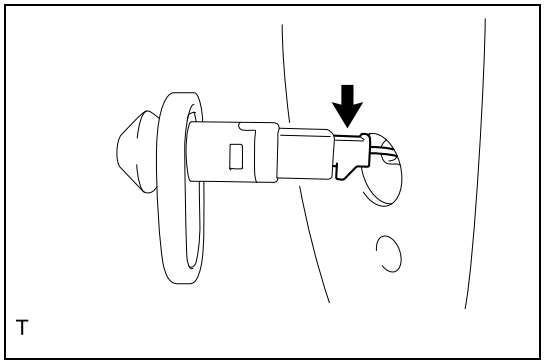

(2) Disconnect the connector and remove the front door courtesy light switch ASSY.

Installation

NOTE:

The following procedure is for LH side. Perform the same procedures for the RH side.

1. Installation of the front door courtesy light switch ASSY
   (1) Connect the connector.
   (2) Install the front door courtesy light switch ASSY with the bolt.
   Standard value:T=7.5N·m {77kgf·cm} {5.5ft·lbf}

LI

Unit inspection

NOTE:

The following procedure is for LH side. Perform the same procedures for the RH side.

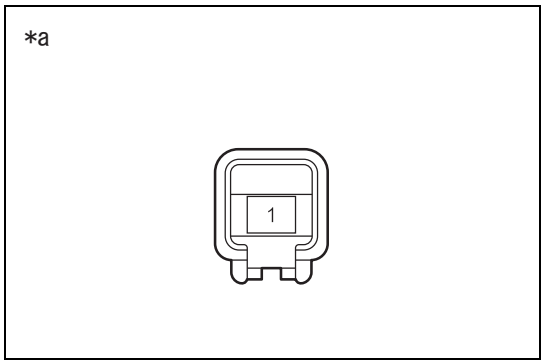

1. Inspection of the front door courtesy light switch ASSY
   (1) Measure the resistance when the shaft of the front door courtesy light switch ASSY is operated.

Resistance

Inspection terminals	Inspection conditions	Standard value
1 - Chassis ground	When the shaft is not pushed in	Less than 1 Ω
1 - Chassis ground	When the shaft is pushed in	10 kΩ or more

Captions in illustration

*a	Connector not connected (front door courtesy light switch ASSY)

Meter

Meter & gauge system

Function inspection ME-3
Parts location ME-5
List of diagnostic codes ME-7
Symptom table ME-7
Description of functions ME-10
How to troubleshoot ME-19
Check list for interview ME-21
Checking / clearing diagnostic codes ME-22
Customize function ME-22
Circuit figure ME-23
ECM terminal arrangement ME-26
Data monitor / active test ME-27
B1500 . . . . . ME-30
B1509 . . . . . ME-34
U0073 . . . . . ME-37
U0100 . . . . . ME-37
U0122 . . . . . ME-37
U0131 . . . . . ME-37
U0140 . . . . . ME-37
U0151 . . . . . ME-37
Entire combination meter does not operate ME-38
Speed meter malfunction ME-39
Tachometer malfunction ME-42
Fuel receiver gauge malfunction ME-45
Water temperature receiver gauge malfunction ME-49
Illumination level does not change when operating the light control rheostat ME-52
Can not switch ODO / TRIP meter display, or can not reset TRIP meter ME-55
The combination meter display is not changed even though the steering switch is operated ME-57

Clock system

Parts location ME-59
Symptom table ME-59
How to troubleshoot ME-59
Circuit figure ME-61

Combination meter ASSY

Exploded view ME-62
Removal ME-63
Disassembly ME-63
Assembly ME-64
Installation ME-64

Clock ASSY

Exploded view ME-66
Removal ME-66
Installation ME-66

Light control rheostat
Exploded view ME-68
Removal ME-68
Installation ME-69

Trip switch
Exploded view ME-70
Removal ME-70
Installation ME-70
Unit inspection ME-71

Meter & gauge system

Function inspection

1. LED check
   (1) Inspection of LED light
      (a)Check that the indicators and the warning lights turn on for the following periods of time when turning IG from OFF to ON.

Criteria

Indicator/warning light	Lighting specifications
A/T OIL TEMP*2*3, fuel, charge	Turns on for approximately 2 seconds upon IG OFF →ON
Auto leveling *1, driver's seat belt, brake, TRC OFF, VSC OFF	Turns on for approximately 3 seconds upon IG OFF →ON
Airbag	Turns on for approximately 6 seconds upon IG OFF →ON
VSC, ABS, oil pressure, check engine, P/S	Turns on upon IG OFF →ON

*1: Headlight discharge type
*2: Automatic transmission system
*2: Normal meter only For TFT meter, check if the display lights up or not.
NOTE:
- The lighting request is issued by the corresponding ECM.
- Check the brake warning light after releasing the parking brake.

   (2) Inspection of seat belt warning indicator
      (a)With IG ON, insert the tongue plate of the driver's seat belt into the buckle, and check that the seat belt warning indicator turns from ON to OFF.

Criteria

Indicator/warning light	Ignition switch operation	Lighting specifications
Seat belt warning	IG OFF →ON	• Blinking →Insert tongue plate →Turns off • Off →Remove tongue plate →Blinking

2. Speed meter check
   (1) Operation inspection
      (a)Using a speed meter tester, check the speed meter reading error and the odometer operation.

Standard value

Km/h display

Standard speed reading by tester [km/h]	Allowable range of meter reading [km/h]
20	19.3 to 22.7
40	39.1 to 42.9
60	58.8 to 63.2
80	78.8 to 83.2
100	98.8 to 103.2
120	118.8 to 123.2
140	138.8 to 143.2
160	158.8 to 163.2
180	178.8 to 183.2
200	198.8 to 203.2
220	218.8 to 223.2
240	238.8 to 243.2

MPH display

Standard speed reading by tester [km/h]	Allowable range of meter reading [MPH]
20	19.4 to 21.8
40	39.3 to 41.9
60	59.3 to 61.9
80	79.3 to 81.9
100	99.3 to 101.9
120	119.3 to 121.9
140	139.3 to 141.9

CAUTION:
Adjust the tire pressure in advance. Inappropriate tire pressure increases reading error.

(b) Check the fluctuation range of the pointer.
Standard value: 0.3° or less

3. Tachometer check

(1) Operation inspection

(a) Start the engine.

(b) Use a revolution indicator to check the reading error of the tachometer.

Standard value

Revolution indicator reading [r/min]	Allowable range of meter reading [r/min]
1000	933 to 1067
2000	1923 to 2077
3000	2913 to 3088
4000	3913 to 4088
5000	4913 to 5088
6000	5913 to 6088
7000	6913 to 7088
8000	7913 to 8088

CAUTION:
Do not increase the engine speed beyond the allowable limit. (Keep the engine speed below the red zone displayed on the meter.)

(c) Check the fluctuation range of the pointer.
Standard value: 0.3 °or less

4. Inspection of oil pressure warning

SST 09843-18040

(1) Operation inspection

(a) Disconnect the connector of the engine oil pressure switch ASSY.

(b) Start the engine.

(c) Using SST (diagnosis check wire No.2), check the state of the oil pressure warning indicator when the vehicle wiring harness connector terminal is short-circuited to the chassis ground.
Criteria: Engine oil pressure warning indicator turns on.

Parts location

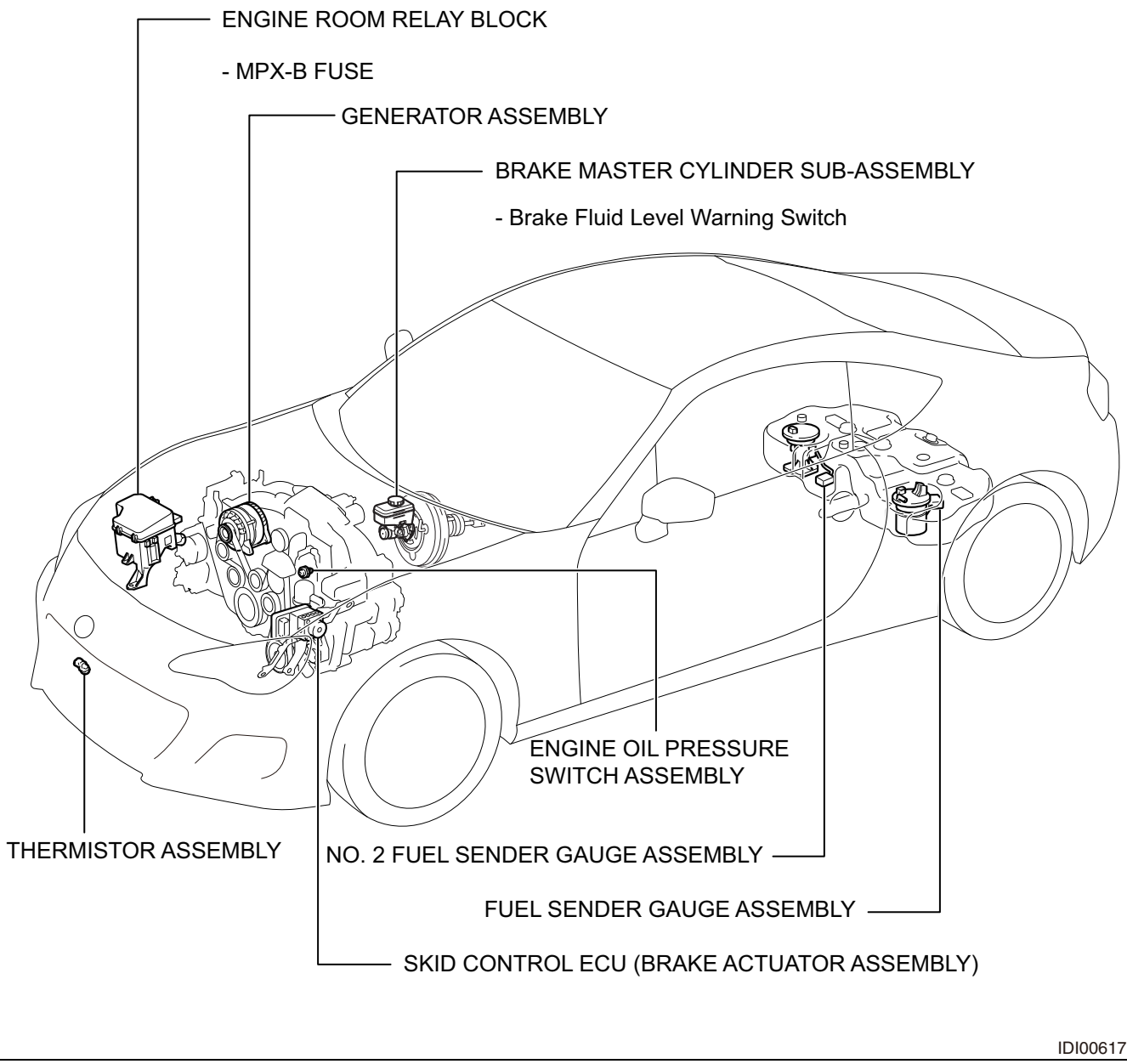

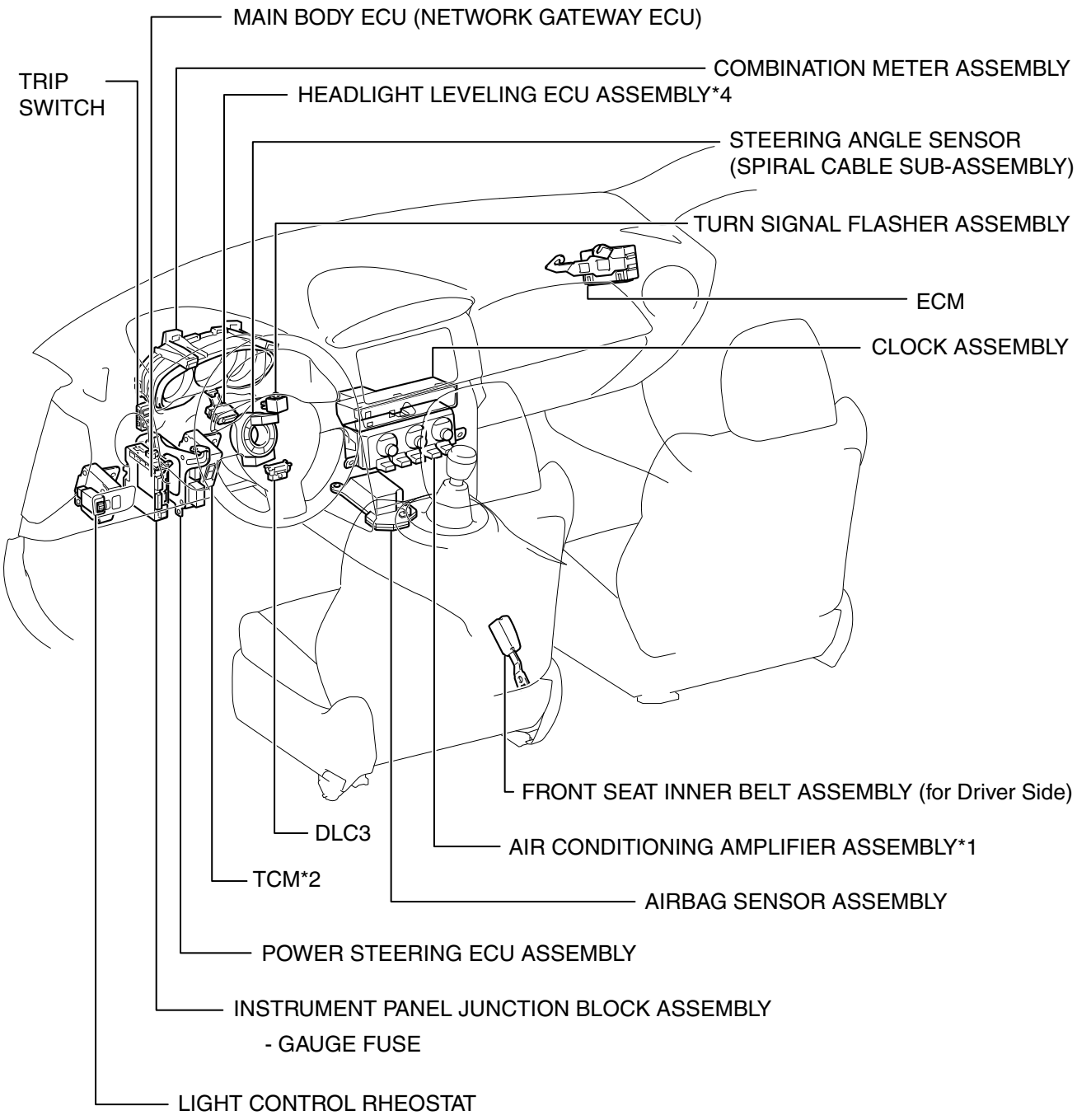

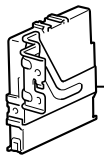

REFER TO THE “REGISTRATION MANUAL FOR IMMOBILIZER” FOR ATTACHMENT POSITION.
CERTIFICATION ECU (SMART KEY ECU ASSEMBLY)*3

*1: for Automatic Air Conditioning System
*2: for Automatic Transmission System
*3: w/ Entry and Start System
*4: for HID Headlight

IDI00618

List of diagnostic codes

Diagnostic codes	Diagnostic items	Reference pages
B1500	[Fuel Sender Open Detected]	ME - 30
B1509	[Ambient air temperature sensor open detection]	ME - 34
U0073	[CAN Communication Failure]	ME - 37
U0100	[Lost Communication With ECM/PCM "A"]	ME - 37
U0122	[Lost Communication With Vehicle Dynamics Control Module]	ME - 37
U0131	[Lost Communication with Power Steering Control Module]	ME - 37
U0140	[BIU ECU Communication Malfunction]	ME - 37
U0151	[Lost Communication With Restraints Control Module]	ME - 37

Symptom table

Meter/gauge

Symptoms	Inspection items	Reference pages
Speed meter malfunction	Refer to the troubleshooting flowchart "Speed meter malfunction"	ME - 39
Tachometer malfunction	Refer to the troubleshooting flowchart "Tachometer malfunction"	ME - 42
Fuel receiver gauge malfunction	Refer to the troubleshooting flowchart "Fuel receiver gauge malfunction"	ME - 45
Illumination level does not change when operating the light control rheostat	Refer to the troubleshooting flowchart "Illumination level does not change when operating the light control rheostat"	ME - 52
Can not switch ODO / TRIP meter display, or can not reset TRIP meter	Refer to the troubleshooting flowchart "Can not switch ODO / TRIP meter display, or can not reset TRIP meter"	ME - 55
Water temperature receiver gauge malfunction	Refer to the troubleshooting flowchart "Water temperature receiver gauge malfunction"	ME - 49
The combination meter display is not changed even though the steering switch is operated	Refer to the troubleshooting flowchart "The combination display is not changed even though the steering switch is operated".	ME - 57

Indicator/warning light

Symptoms	Inspection items	Reference pages
Front fog light indicator light malfunction*1	Active test by SSM4 (front fog light indicator)	ME - 27
	CAN communication system	NW - 30
	Lighting (exterior) - lighting system	LE - 10
	Replacement of combination meter ASSY	ME - 63
Turn indicator light malfunction	Inspection of the turn signal flasher ASSY	LE - 88
	Vehicle wiring harness and connector	-
	Replacement of combination meter ASSY	ME - 63
SET indicator light malfunction	Execution of active test (SET indicator)	ME - 27
	CAN communication system	-
	Combination meter ASSY	ME - 62
CRUISE indicator malfunction (green)	Execution of active test (CRUISE indicator)	ME - 27
	CAN communication system	-
	Combination meter ASSY	ME - 62
CRUISE indicator malfunction (yellow)	Execution of active test (CRUISE warning)	ME - 27
	CAN communication system	-
	Combination meter ASSY	ME - 62
Door warning light malfunction	Active test by SSM4 (door (all) warning) *4	ME - 27
	CAN communication system	NW - 30
	Lighting (interior) - lighting system	LI - 8
	Replacement of combination meter ASSY	ME - 63
High beam indicator light malfunction (high beam head light operates normally)	Active test by SSM4 (high-beam indicator)	ME - 27
	CAN communication system	NW - 30
	Replacement of combination meter ASSY	ME - 63

Symptoms	Inspection items	Reference pages
TPMS indicator malfunction	Execution of active test (tire pressure warning system indicator)	ME - 27
	Tire pressure warning circuit	-
	Combination meter ASSY	ME - 62
HSA indicator malfunction	Active test by SSM4 (hill start assist working lamp)	ME - 27
	Combination meter ASSY	ME - 62
Auto leveling warning light malfunction	LED check	ME - 3
	Vehicle wiring harness and connector	-
	Lighting (exterior) - lighting system	LE - 10
	Replacement of combination meter ASSY	ME - 63
Security indicator light	Refer to the troubleshooting flowchart "Security indicator light does not blink" *3	TD - 269
	Refer to the troubleshooting flowchart "Security indicator light does not blink" *4	TD - 310
Smart indicator does not turn on *2	Execution of active test (smart indicator)	ME - 27
	CAN communication system	NW - 30
	Smart entry & start system (smart entry function)	TD - 27
	Smart entry & start system (start function)	TD - 146
	Replacement of the combination ASSY	ME - 63
Smart warning light malfunction *2	Active test by SSM4 (smart indicator, smart warning)	ME - 27
	CAN communication system	NW - 30
	Smart entry & start system (smart entry function)	TD - 27
	Smart entry & start system (start function)	TD - 146
	Replacement of combination meter ASSY	ME - 63
REV indicator light malfunction	Description of functions (customize function)	ME - 10
	Inspection of the trip switch	ME - 71
	Vehicle wiring harness and connector	-
	Replacement of combination meter ASSY	ME - 63
Slip indicator light malfunction	LED check	ME - 3
	Active test by SSM4 (SLIP warning light)	ME - 27
	Refer to the troubleshooting flowchart "Slip indicator light system"	BC - 88
ABS warning light malfunction	LED check	ME - 3
	Active test by SSM4 (ABS warning lamp)	ME - 27
	Refer to the troubleshooting flowchart "ABS warning light remains ON"	BC - 67
Driver's seat belt warning light malfunction	Active test by SSM4 (driver's seat belt warning light)	ME - 27
	Refer to the troubleshooting flowchart "Driver's seat belt warning light does not operate"	SB - 11
Charge warning light malfunction	LED check	ME - 3
	Active test by SSM4 (charge warning lamp)	ME - 27
	Generator inspection	BH - 3
	Vehicle wiring harness and connector	-
	Combination meter ASSY	ME - 62
Oil pressure warning light malfunction	LED check	ME - 3
	Inspection of oil pressure warning	ME - 3
	Vehicle wiring harness and connector	-
	Replacement of combination meter ASSY	ME - 63
Check engine warning light malfunction	LED check	ME - 3
	Active test by SSM4 (check engine warning light)	ME - 27
	Refer to the troubleshooting flowchart "Check engine warning light circuit"	ES - 631
SPORT indicator light malfunction *3	Active test by SSM4 (SPORT indicator) *4	ME - 27
	CAN communication system	NW - 30
	Automatic transmission system	AT - 15
	Replacement of combination meter ASSY	ME - 63

Symptoms	Inspection items	Reference pages
SNOW indicator light malfunction *3	Active test by SSM4 (ECT SNOW indicator) *4	ME - 27
	CAN communication system	NW - 30
	Automatic transmission system	AT - 15
	Replacement of combination meter ASSY	ME - 63
A/T OIL TEMP warning light malfunction *3	LED check	ME - 3
	Active test by SSM4 (A/T oil temperature warning light) *4	ME - 27
	Automatic transmission system	AT - 15
	Replacement of combination meter ASSY	ME - 63
Brake warning light malfunction	LED check	ME - 3
	Active test by SSM4 (brake warning light)	ME - 27
	Refer to the troubleshooting flowchart "Brake warning light remains ON"	BC - 71
TRC OFF indicator light malfunction	LED check	ME - 3
	Active test by SSM4 (TRC OFF indicator)	ME - 27
	Refer to the troubleshooting flowchart "TRC OFF indicator light system"	BC - 76
VSC OFF indicator light malfunction	LED check	ME - 3
	Active test by SSM4 (VSC OFF indicator)	ME - 27
	Refer to the troubleshooting flowchart "VSC OFF indicator light system"	BC - 82
TRACK indicator light malfunction	LED check	ME - 3
	Refer to the troubleshooting flowchart "VSC SPORT indicator light system"	BC - 85
SRS airbag warning light malfunction	Active test by SSM4 (airbag warning light)	ME - 27
	Refer to the troubleshooting flowchart "Warning light remains ON"	RS - 53
EPS warning light malfunction	LED check	ME - 3
	Active test by SSM4 (electric power steering warning light)	ME - 27
	Refer to the troubleshooting flowchart "P/S warning light remains ON"	PA - 35
Fuel level warning light malfunction	LED check	ME - 3
	Active test by SSM4 (fuel level warning light)	ME - 27
	Inspection of the fuel sender gauge ASSY	FU - 79
	Inspection of the fuel sender gauge ASSY NO.2	FU - 79
	Replacement of combination meter ASSY	ME - 63

*1: With front fog lights
*2: With smart entry
*3: Transmission A/T
*4: Active test is not necessary for TFT meter.

Buzzer function

Symptoms	Inspection items	Reference pages
None of the buzzers operate	Replacement of combination meter ASSY	ME - 63
A/T reverse buzzer malfunction (shift position R is normal) *1	Replacement of combination meter ASSY	ME - 63
Seat belt buzzer malfunction (seat belt warning light is normal)	Replacement of combination meter ASSY	ME - 63
EPS buzzer malfunction (EPS warning light is normal)	Replacement of combination meter ASSY	ME - 63
Smart key warning buzzer malfunction *2	Refer to the troubleshooting flowchart "Internal warning buzzer of the smart entry system does not sound"	TD - 135
Key reminder buzzer malfunction *3	Refer to the troubleshooting flowchart "Key reminder buzzer does not sound"	DL - 89
Immobilizer collation completion buzzer malfunction	CAN communication system	NW - 30
	Engine immobilizer system *2	TD - 237
	Engine immobilizer system *3	TD - 277
	Replacement of combination meter ASSY	ME - 63
SPORT shift reject buzzer malfunction (drive system operates normally) *1	Replacement of combination meter ASSY	ME - 63
REV buzzer malfunction (LEV indicator light is normal)	Description of functions (customize function)	ME - 10
	Replacement of combination meter ASSY	ME - 63
Light reminder buzzer malfunction (lighting system is normal, door warning light turns on when door is opened)	Replacement of combination meter ASSY	ME - 63

Symptoms	Inspection items	Reference pages
HSA buzzer malfunction (HSA light turns off when HSA is set to ON.)	Replacement of combination meter ASSY	ME - 63

*1: Transmission A/T

*2: With smart entry

*3: No smart entry

Drive monitor

Symptoms	Inspection items	Reference pages
Can not switch ODO / TRIP meter display, or can not reset TRIP meter	Inspection of the trip switch	ME - 71
	Vehicle wiring harness and connector	-
	Replacement of combination meter ASSY	ME - 63
Display error (no display, value does not change)	Replacement of combination meter ASSY	ME - 63
ODO/TRIP display error	Active test by SSM4 (display No. 1-6, 5, 4, 3, 2, 1, 0, all turn on)	ME - 27
	Active test by SSM4 (display No. 2-9, 8, 7)	ME - 27
	Replacement of combination meter ASSY	ME - 63
Shift position indicator light malfunction *1	Active test by SSM4 (AT indicator No.1-L, 2, 3, 4, D, N, R, P)	ME - 27
	Active test by SSM4 (AT indicator No.2-8, 5, 6, 7, M, S)	ME - 27
	Active test by SSM4 (AT indicator No.3-D)	ME - 27
	Replacement of combination meter ASSY	ME - 63
Shift position indicator light malfunction (display is normal after releasing clutch) *2	Description of functions (customize function)	ME - 10
	Inspection of the trip switch	ME - 71
	Active test by SSM4 (AT indicator No.1-L, 2, 3, 4, D, N, R, P)	ME - 27
	Active test by SSM4 (AT indicator No.2-8, 5, 6, 7, M, S)	ME - 27
	Active test by SSM4 (AT indicator No.3-D)	ME - 27
	Replacement of combination meter ASSY	ME - 63
Ambient temperature display error	Inspection of the A/C thermistor (ambient temperature sensor)	AC - 161
	Vehicle wiring harness and connector	-
	Replacement of combination meter ASSY	ME - 63
Significant display error of average fuel economy (speed meter and tachometer are normal)	Replacement of combination meter ASSY	ME - 63
Significant display error of instantaneous fuel economy (speed meter and tachometer are normal)	Replacement of combination meter ASSY	ME - 63
Display error of the digital speed meter (no display, value does not change)	Replacement of combination meter ASSY	ME - 63

*1: Transmission A/T

*2: Transmission M/T

Description of functions

1. Multi display
   (1) Multi display flowchart (normal meter)

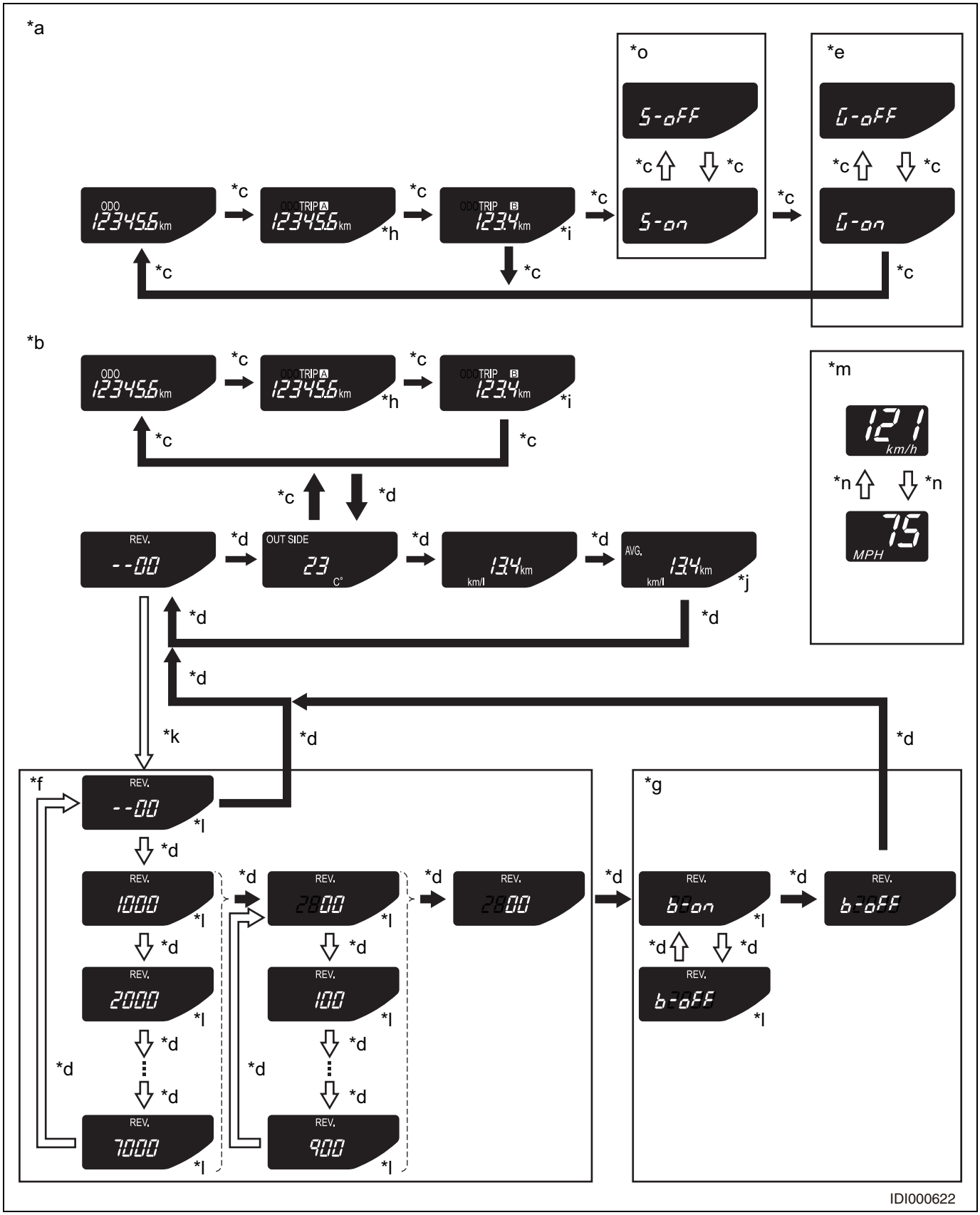

Captions in illustration

*a	Display transition during IG-OFF	*b	Display transition during IG-ON
*c	"ODO/TRIP" switch	*d	"DISP" switch
*e	MT shift display setting	*f	Engine speed setting
*g	Buzzer sound ON/OFF setting	*h	Holding down the "ODO/TRIP" switch will reset the trip meter A to 0.0

*i	Holding down the "ODO/TRIP" switch will reset the trip meter B to 0.0	*j	Holding down the "DISP" switch will reset the average fuel economy to 0.0
*k	"DISP" switch is operated when the vehicle speed is 0 km/h{0 MPH}	*l	"REV." blinking
*m	Digital speed meter screen transition	*n	km/h / MPH switch (w / km/h / MPH switch)
*o	Sweep ON/OFF setting	➡	Press
⇨	Hold down	-	-

(2) Multi display flowchart (TFT meter)

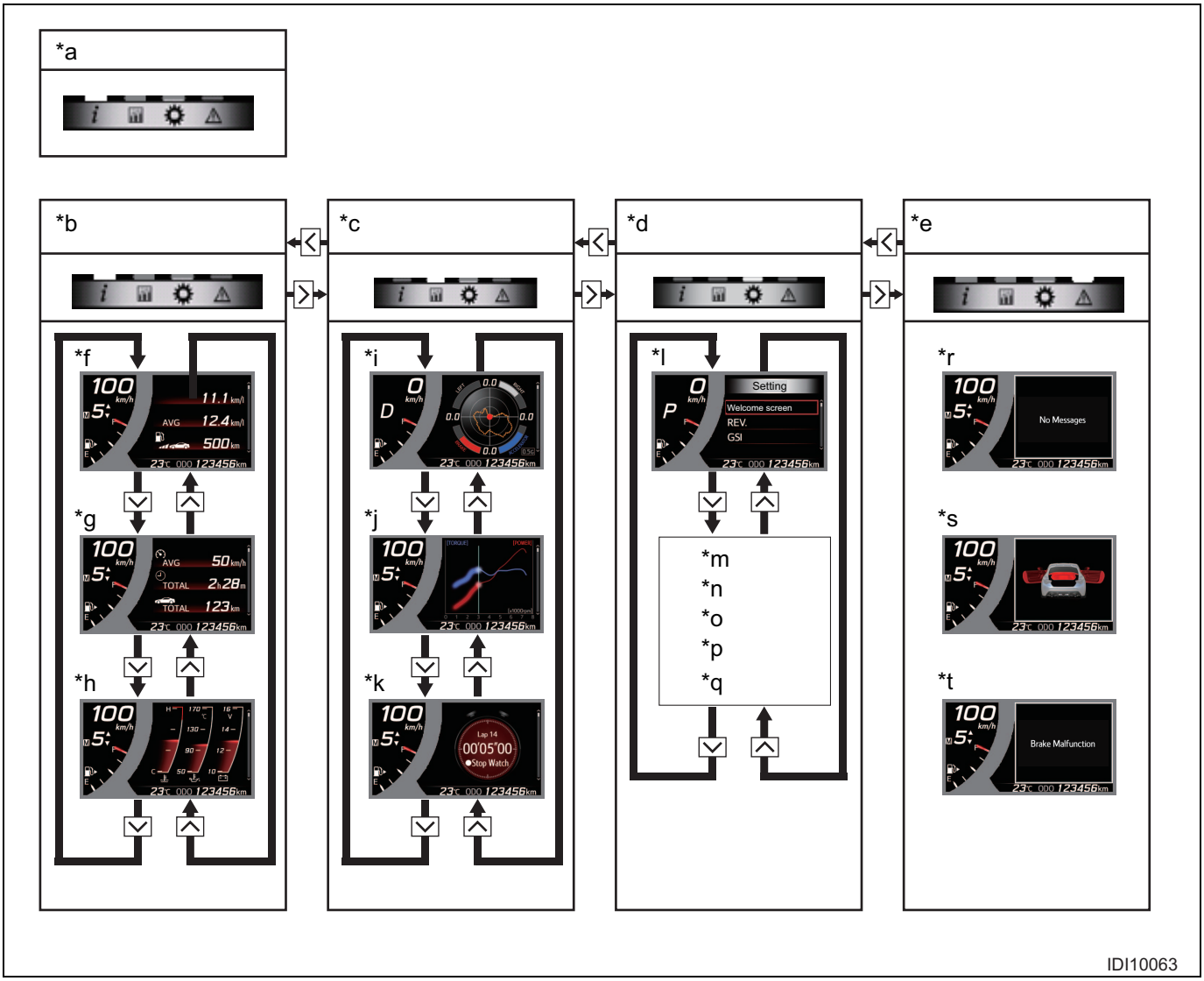

Captions in illustration

*a	Pop-up display	*b	Driver's information screen
*c	Dedicated screen	*d	Customize screen
*e	Warning and advice screen	*f	Drive Info1
*g	Drive Info2	*h	Drive Info3
*i	G ball	*j	Torque curve
*k	Stop-watch	*l	Welcome screen
*m	REV setting	*n	GSI setting (not displayed depending on the destination)
*o	Language setting	*p	Unit setting
*q	Initialization	*r	When no message is displayed

*s	Example: When the door is open	*t	Example: When advice is displayed

2. Drive signal
   (1) Various signals are input and output via CAN communication or direct wires in order to drive the indicator lights, warning lights, buzzers, and drive monitor in the combination meter ASSY.

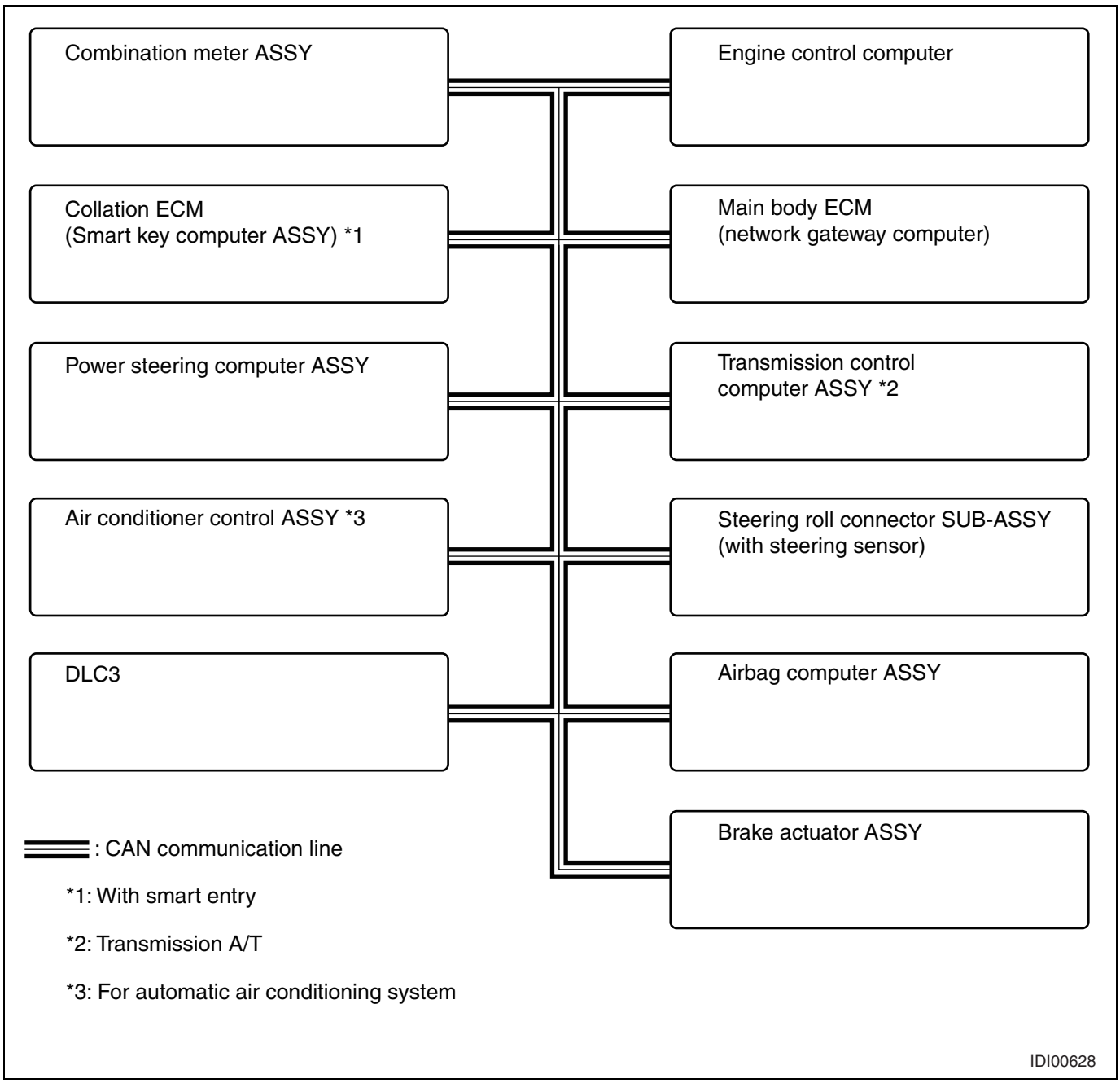

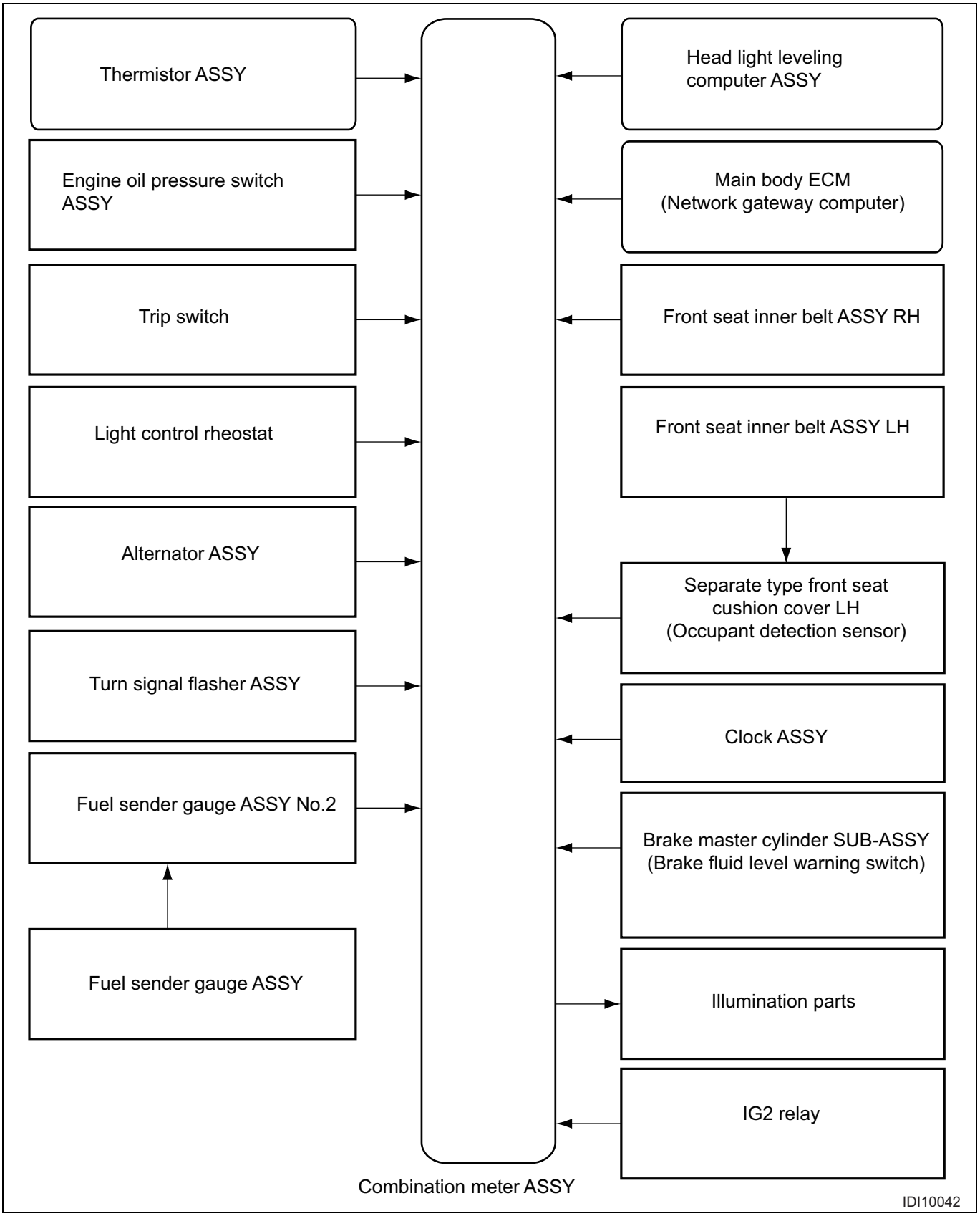
Thermistor ASSY
Engine oil pressure switch ASSY
Trip switch
Light control rheostat
Alternator ASSY
Turn signal flasher ASSY
Fuel sender gauge ASSY No.2
Fuel sender gauge ASSY
Head light leveling computer ASSY
Main body ECM (Network gateway computer)
Front seat inner belt ASSY RH
Front seat inner belt ASSY LH
Separate type front seat cushion cover LH (Occupant detection sensor)
Clock ASSY
Brake master cylinder SUB-ASSY (Brake fluid level warning switch)
Illumination parts
IG2 relay
Combination meter ASSY
IDI10042

ME

Meter/gauge

Meter/gauge name	Behavior	Input/Output	Signal	CAN/hard-wired	Transmitting ECM
Speed meter	Movement of indicator pointer	Input	Vehicle speed signal	CAN	Brake actuator ASSY
Tachometer	Movement of indicator pointer	Input	Engine speed signal	CAN	Engine control computer
Fuel receiver gauge	Movement of indicator pointer *1	Input	Fuel consumption	CAN	Engine control computer
			Remaining fuel level	Hard-wired	Fuel sender gauge ASSY Fuel sender gauge ASSY NO.2
			Vehicle speed signal	CAN	Brake actuator ASSY
			Shift position information signal		Transmission control computer
			Parking brake information signal		Main body ECM (Network gateway computer)
Water temperature receiver gauge	Movement of indicator pointer *1	Input	Coolant temperature signal	CAN	Engine control computer

*1: No indicator pointer for TFT meter

Indicator/warning light

Light name	Behavior	Input/Output	Signal	CAN/hard-wired	Transmitting ECM
Front fog indicator light *1	ON	Input	Front fog light lighting signal	CAN	Main body ECM (Network gateway computer)
Turn indicator light	Blink	Input	Turn right/left blinking signal	Hard-wired	Turn signal flasher ASSY
Door warning light *6	ON	Input	D seat courtesy SW signal P seat courtesy SW signal Luggage courtesy SW signal	CAN	Main body ECM (Network gateway computer)
BEAM indicator light	ON	Input	Head light HI lighting signal	CAN	Main body ECM (Network gateway computer)
AUTO LEVELING warning light	ON	Input	Level error signal	Hard-wired	Head light leveling computer ASSY
Security indicator light	Blink	Input	Armed state signal	Hard-wired	Main body ECM (Network gateway computer)
	ON		Armed state signal Alarm preparation state signal		
Smart key indicator light (green) *2	Blink	Input		CAN	Collation ECM (Smart key computer ASSY)
	ON		Key collation complete (engine can be started)		
Smart key indicator light (yellow) *2	Blink	Input	Smart system alarm signal	CAN	Collation ECM (Smart key computer ASSY)
	ON		No key in vehicle alarm signal		
REV indicator light	ON	Input	Engine speed signal	CAN	Engine control computer
SLIP indicator light	Blink	Input	SLIP indicator light blinking signal	CAN	Brake actuator ASSY
	ON		SLIP indicator light lighting signal		
ABS warning light	Blink	Input	ABS warning light blinking signal	CAN	Brake actuator ASSY
	ON		ABS warning light lighting signal		
Driver's seat belt warning light	Blink	Input	D seat buckle SW signal	Hard-wired	Front seat inner belt ASSY RH
Charge warning light	ON	Input	Generator L terminal	CAN	Alternator ASSY

ME

Light name	Behavior	Input/Output	Signal	CAN/hard-wired	Transmitting ECM
Oil pressure warning light	ON	Input	Engine oil pressure drop signal	Hard-wired	Engine oil pressure switch ASSY
Check engine warning light	ON	Input	Check engine warning light lighting signal	CAN	Engine control computer
SPORT indicator light *3	ON	Input	Sport mode indicator lighting signal	CAN	Transmission control computer ASSY
SNOW indicator light *3	ON	Input	Snow mode indicator lighting signal	CAN	Transmission control computer ASSY
AT oil temperature warning light *3	ON	Input	AT oil temperature warning light lighting signal	CAN	Transmission control computer ASSY
Brake warning light	ON	Input	Brake oil level warning signal	Hard-wired	Brake fluid level switch
			Parking brake SW signal	CAN	Main body ECM
			EBD signal	CAN	Brake actuator ASSY
Master key warning light *4	Blink	Input	Vehicle speed signal	CAN	Brake actuator ASSY
			D seat curtain SW signal		Main body ECM
			P seat curtain SW signal		
			Luggage curtain SW signal		
	Blink		Smart alert signal		Collation ECM
	Blink or illuminate		Engine coolant temperature signal		Engine control computer
	Blink		EPS warning light blinking signal		Power steering computer ASSY
	ON		EPS warning light lighting signal		
	Blink		AT oil temperature warning light lighting signal		Transmission control computer ASSY
	ON		Level error signal		Head light leveling computer ASSY
	Blink		Airbag blinking warning light		Airbag computer ASSY
	ON		Airbag lighting warning light		
	ON		EBD warning display lighting signal		Brake actuator ASSY
HSA indicator light	ON	Input	HSA operation ON signal	CAN	Brake actuator ASSY
	Blink		HSA operation status signal		
Engine coolant temperature indicator light/warning light *4	Blink	Input	Engine coolant temperature indicator light/warning light blinking signal	CAN	Engine control computer
	ON		Engine coolant temperature indicator light/warning light lighting signal		
TRC OFF indicator light	ON	Input	TRC OFF indicator lighting signal	CAN	Brake actuator ASSY
VSC OFF indicator light	ON	Input	VSC OFF indicator lighting signal	CAN	Brake actuator ASSY
TRAC indicator light	ON	Input	VSC SPORT indicator lighting signal	CAN	Brake actuator ASSY
Airbag warning light	Blink	Input	Airbag warning light blinking signal	CAN	Airbag computer ASSY
	ON		Airbag warning light lighting signal		
	-		Diagnosis mode signal		
EPS warning light	Blink	Input	EPS warning light blinking signal	CAN	Power steering computer ASSY
	ON		EPS warning light lighting signal		

ME

Light name	Behavior	Input/Output	Signal	CAN/hard-wired	Transmitting ECM
Fuel level warning light	ON	Input	Fuel level signal	Hard-wired	Fuel sender gauge ASSY Fuel sender gauge ASSY NO.2
Tire pressure warning *5	ON	Input	Tire pressure warning light lighting signal	CAN	Main body ECM
	Blink		Tire pressure warning light blinking signal		
SET indicator light	ON	Input	SET indicator lighting signal	CAN	Engine control computer
CRUISE indicator (green)	ON	Input	CRUISE indicator (green) lighting signal	CAN	Engine control computer
CRUISE indicator (yellow)	ON	Input	CRUISE indicator (yellow) lighting signal	CAN	Engine control computer

*1: With front fog lights
*2: With smart entry
*3: Transmission A/T
*4: TFT meter
*5: With TPM
*6: Normal meter

Buzzer

Buzzer	Behavior	Input/Output	Signal	CAN/hard-wired	Transmitting ECM
Reverse buzzer *1	Intermittent beep	Input	Shift position R signal	CAN	Main body ECM
Driver's seat belt buzzer	Intermittent beep	Input	Vehicle speed signal	CAN	Brake actuator ASSY
			Shift position R signal		Main body ECM
			D seat buckle SW signal	Hard-wired	Front seat inner belt ASSY RH
EPS buzzer	Single short beep	Input	EPS warning light signal	CAN	Power steering computer ASSY
Smart key buzzer *2	Single short beep	Input	Meter buzzer single short beep signal	CAN	Collation ECM (Smart key computer ASSY)
	Intermittent beep		Meter buzzer intermittent beep signal		
	Continuous beep		Meter buzzer continuous beep signal		
Key reminder *3	Intermittent beep	Input	Buzzer sound signal	CAN	Main body ECM (Network gateway computer)
Immobilizer key collation completion notification buzzer *2	Single short beep	Input	Immobilizer key collation completion notification signal	CAN	Collation ECM (Smart key computer ASSY)
Sport reject buzzer *1	Double short beeps	Input	Reject buzzer signal	CAN	Transmission control computer ASSY
REV buzzer	Single short beep	Input	Engine speed signal	CAN	Engine control computer
Light reminder	Continuous beep	Input	IG signal	Hard-wired	IG2 relay
			Buzzer sound signal	CAN	Main body ECM (Network gateway computer)
HSA buzzer	Single short beep	Input	HSA buzzer warning signal	CAN	Brake actuator ASSY
			HSA operation ON signal		

*1: Transmission A/T
*2: With smart entry
*3: No smart entry

ME

Multi display

Monitor name	Behavior	Input/Output	Signal	CAN/hard-wired	Transmitting ECM
Odo/trip meter	Numeral value display	Input	Vehicle speed pulse signal integration value signal	CAN	Brake actuator ASSY
			Vehicle speed signal		Trip switch
			Odo/trip SW signal	Hard-wired	Trip switch
A/T shift position *1	Display	Input	Shift position P signal	CAN	Transmission control computer ASSY
			Shift position R signal		
			Shift position N signal		
			Shift position D signal		
			Shift position number signal (1 to 6)		
			Mode indicator signal		
Shift (up) indicator *1	Display	Input	Gear position number signal	CAN	Transmission control computer ASSY
Shift (down) indicator *1	Display	Input	Gear position number signal	CAN	Transmission control computer ASSY
M/T shift position *2	Display	Input	Gear position number signal	CAN	Engine control ECM ASSY
MT shift (upper) *2	Display	Input	Shift up signal	CAN	Engine control ECM ASSY
Ambient temperature	Display	Input	Vehicle speed signal	CAN	Brake actuator ASSY
			Ambient temperature sensor input	Hard-wired	Thermistor ASSY
Digital speed meter	Numeral value display	Input	Vehicle speed signal	CAN	Brake actuator ASSY
Instantaneous fuel economy	Numeral value display	Input	Engine speed signal	CAN	Engine control computer
			Fuel injection quantity signal		
			Vehicle speed pulse signal integration value signal		Brake actuator ASSY
			Vehicle speed signal		
Average fuel economy	Numeral value display	Input	Engine speed signal	CAN	Engine control computer
			Fuel injection quantity signal		
			Vehicle speed pulse signal integration value signal		Brake actuator ASSY
			Vehicle speed signal		
Distance to empty *3	Numeral value display	Input	Engine speed signal	CAN	Engine control computer
			Fuel injection quantity signal		
			Vehicle speed pulse signal integration value signal		Brake actuator ASSY
			Vehicle speed signal		
Average vehicle speed *3	Numeral value display	Input	Vehicle speed pulse signal integration value signal	CAN	Engine control computer
			Vehicle speed signal		
Continuous driving time *3	Numeral value display	Input	Engine speed signal	CAN	Engine control computer
Continuous driving distance *3	Numeral value display	Input	Vehicle speed pulse signal integration value signal	CAN	Brake actuator ASSY
			Vehicle speed signal		Airbag computer ASSY
			Engine speed signal		
Engine coolant temperature gauge *3	Display	Input	Coolant temperature signal	CAN	Engine control computer
Oil temperature gauge *3	Display	Input	Engine oil temperature signal	CAN	Engine oil pressure switch ASSY

ME

Monitor name	Behavior	Input/Output	Signal	CAN/hard-wired	Transmitting ECM
Voltage gauge *3	Display	Input	IG voltage	Hard-wired	Generator ASSY
G ball *3	Display	Input	Longitudinal G Sensor	CAN	Brake actuator ASSY
			Lateral acceleration		
Steering angle gauge *3	Display	Input	Steering angle sensor	CAN	Brake actuator ASSY
Brake pedal force *3	Display	Input	Brake pressure	CAN	Brake actuator ASSY
Accelerator opening angle *3	Display	Input	Accelerator opening ratio	CAN	Engine control computer
Torque curve *3	Display	Input	Engine speed signal	CAN	Engine control computer
Stop-watch *3	Numeral value display	Input	Meter operation switch signal	Hard-wired	Steering switch

*1: Transmission A/T
*2: Transmission M/T
*3: TFT meter

How to troubleshoot

1	Bring in the car

Next

2	Interview and phenomenon check

NOTE:
Refer to ME - 21.
Result

Result	Go to
Phenomenon can be confirmed	A
Phenomenon can not be confirmed	B

B → To fault simulation (Refer to IN - 32)

A

3	Communication function inspection of large-scale multiplex communication system for vehicle body [LIN]

NOTE:
Refer to NW - 7.
(1) Check CAN communication system.
Result

Result	Go to
Code is not output	A
Code is output	B

B → Go to "Large-scale multiplex communication system for vehicle body [LIN]" (Refer to NW - 5)

A

4	Inspection of CAN communication system

NOTE:
Refer to NW - 30.
(1) Using SSM4, perform a function check of the CAN communication system to check that no abnormal condition is present in the communication system.
Result

Result	Go to
Functioning properly	A
Not functioning properly	B

B → To section for control system CAN communication system (Refer to NW - 30)

A

5	Symptom table

NOTE:
Refer to ME - 7.
Result

Result	Go to
Not applicable to the symptom table.	A
Applicable to the symptom table.	B

B → Go to Step 7.

A

6	Perform troubleshooting with the method below based on malfunctions.

(1) Function inspection (Refer to ME - 3)
(2) ECM terminal arrangement (Refer to ME - 26)
(3) Data monitor / active test (Refer to ME - 27)
(4) Unit inspection

Next

7	Adjustment, repair, or replacement

Next

8	Confirmation test

Next

Complete

Check list for interview

Combination Meter System Checklist for Interview

Inspector:

Name		Registration No.	
		First registration Year Month	
		Frame No.	
Year/month/date of vehicle bring-in	/ /	Odometer reading	
Date when trouble occurred	/ /		
Frequency of occurrence	☐ Continuous ☐ Intermittent (times/day)		
Weather	☐ Fine ☐ Cloudy ☐ Rainy ☐ Snowy ☐ Other ( )		
Temperature	Approx. ( ) °C(°F)		

Trouble symptom

☐ Defective operation of speedometer ☐ Does not move ☐ Operation error is large ☐ Others ( )
☐ Defective operation of tachometer ☐ Does not move ☐ Operation error is large ☐ Others ( )
☐ Defective operation of fuel gauge ☐ Does not move ☐ Operation error is large ☐ Others ( )
☐ Defective operation of engine coolant temperature gauge ☐ Does not move ☐ Operation error is large ☐ Others ( )
☐ Display error ☐ Does not move ☐ Operation error is large ☐ Others ( )
☐ Indicator, warning light Not lit (light)
☐ Indicator, warning light Lit (light)
☐ Buzzer sound error ☐ Dose not sound ☐ Abnormal sound (buzzer)
☐ Others

IDI00620

ME

Checking / clearing diagnostic codes

1. Checking diagnostic code by SSM4
   (1) Using SSM4, select [Each System] →[Combination Meter] →[DTC] according to the screen instructions and check diagnostic code.
2. Clearing recorded diagnostic codes by SSM4
   (1) Using SSM4, select [Each System] →[Combination Meter] →[Clear Memory] according to the screen display and clear diagnostic code.

customize function

1. Customization of meter & gauge system
   (1) Customization using the SSM4
      (a)With the ignition turned to IG OFF, connect the SSM4 to the DLC3.
      (b)Turn IG to ON, and turn on the SSM4.
      (c)From the SSM4 screen, select [Customize] →[Warning] and perform the customization settings.

Display name	Initial setting	Contents	Setting	Controller ECM
[Key Remind Sound]	1200 ms	Setting of the warning cycle when the driver's door is opened while IG OFF or ACC ON	600 ms/900 ms/1200 ms	Meter ECM
[Taillight warning buzzer]	[ON]	Setting of the function that sounds a buzzer when the driver's door is opened while IG OFF and tail SW ON	[ON]/[OFF]	Meter ECM

      (d)From the SSM4 screen, select [Customize] →[Meter] and perform the customization settings.

ME

Display name	Initial setting	Contents	Setting	Controller ECM
[Outside temperature indication]	0°C	Function of adjusting the difference from actual measurement by increasing/decreasing the displayed temperature (Temperature correction is only possible in increments of 1°C)	+3°/+2°C/+1°C/0°C/-1°C/-2°C/-3°C	Meter ECM

Circuit figure

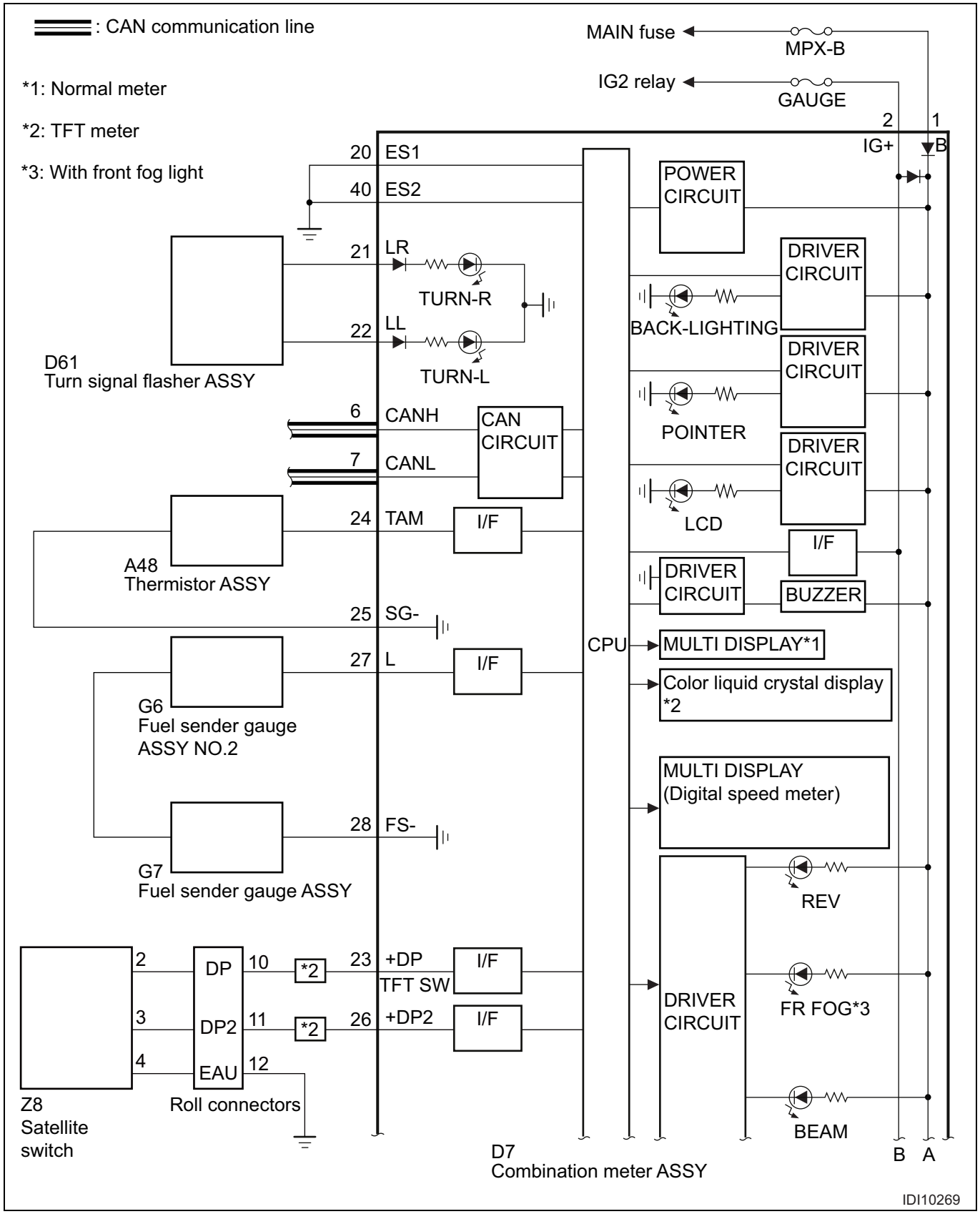

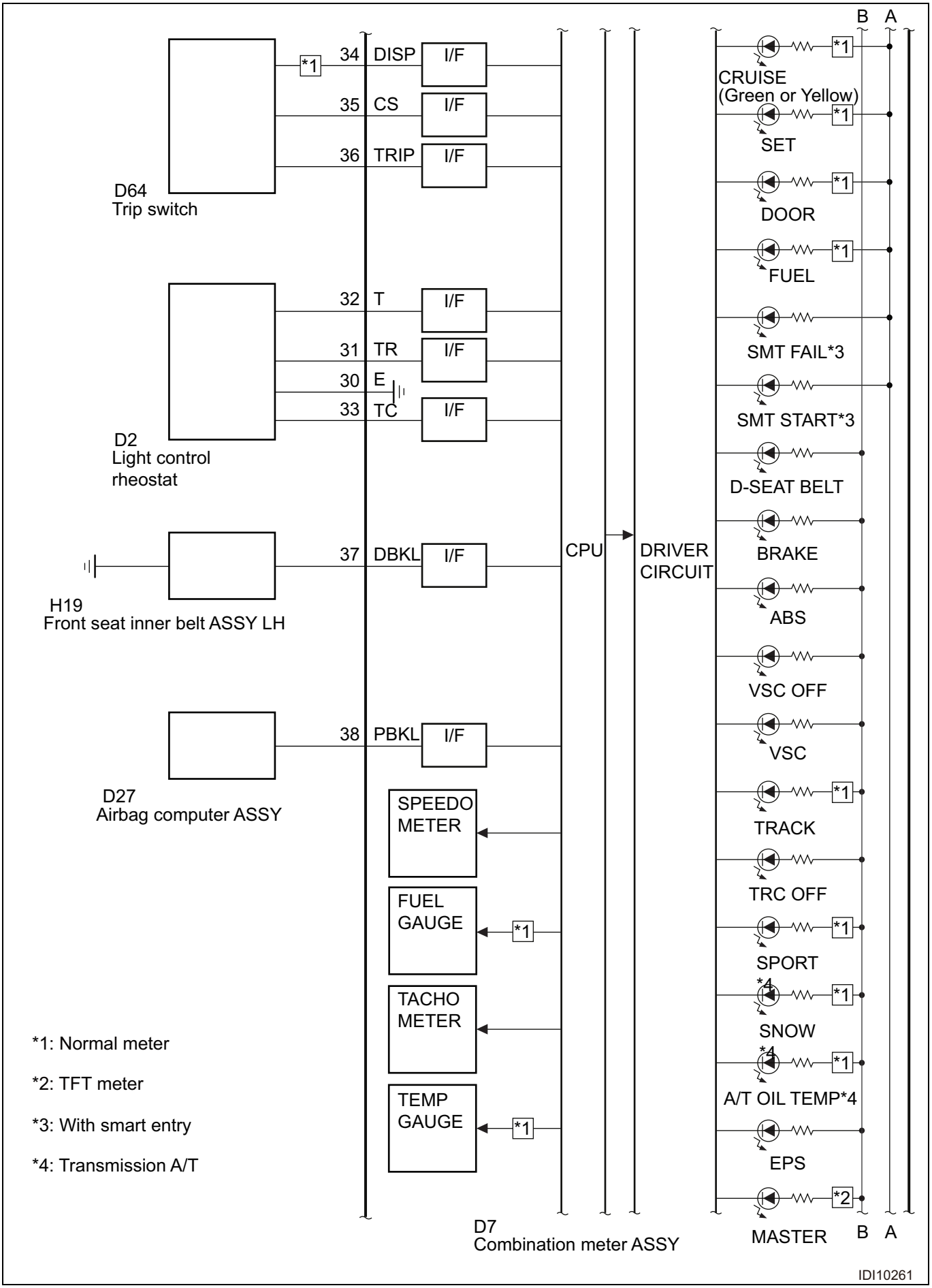
B A
*1
34 DISP I/F
35 CS I/F
36 TRIP I/F
D64
Trip switch
32 T I/F
31 TR I/F
30 E
33 TC I/F
D2
Light control
rheostat
37 DBKL I/F
H19
Front seat inner belt ASSY LH
38 PBKL I/F
D27
Airbag computer ASSY
CPU
DRIVER
CIRCUIT
SPEEDO
METER
FUEL
GAUGE
TACHO
METER
TEMP
GAUGE
CRUISE
(Green or Yellow)
SET
DOOR
FUEL
SMT FAIL*3
SMT START*3
D-SEAT BELT
BRAKE
ABS
VSC OFF
VSC
TRACK
TRC OFF
SPORT
*4
SNOW
*4
A/T OIL TEMP*4
EPS
*2
MASTER
D7
Combination meter ASSY
*1: Normal meter
*2: TFT meter
*3: With smart entry
*4: Transmission A/T
IDI10261

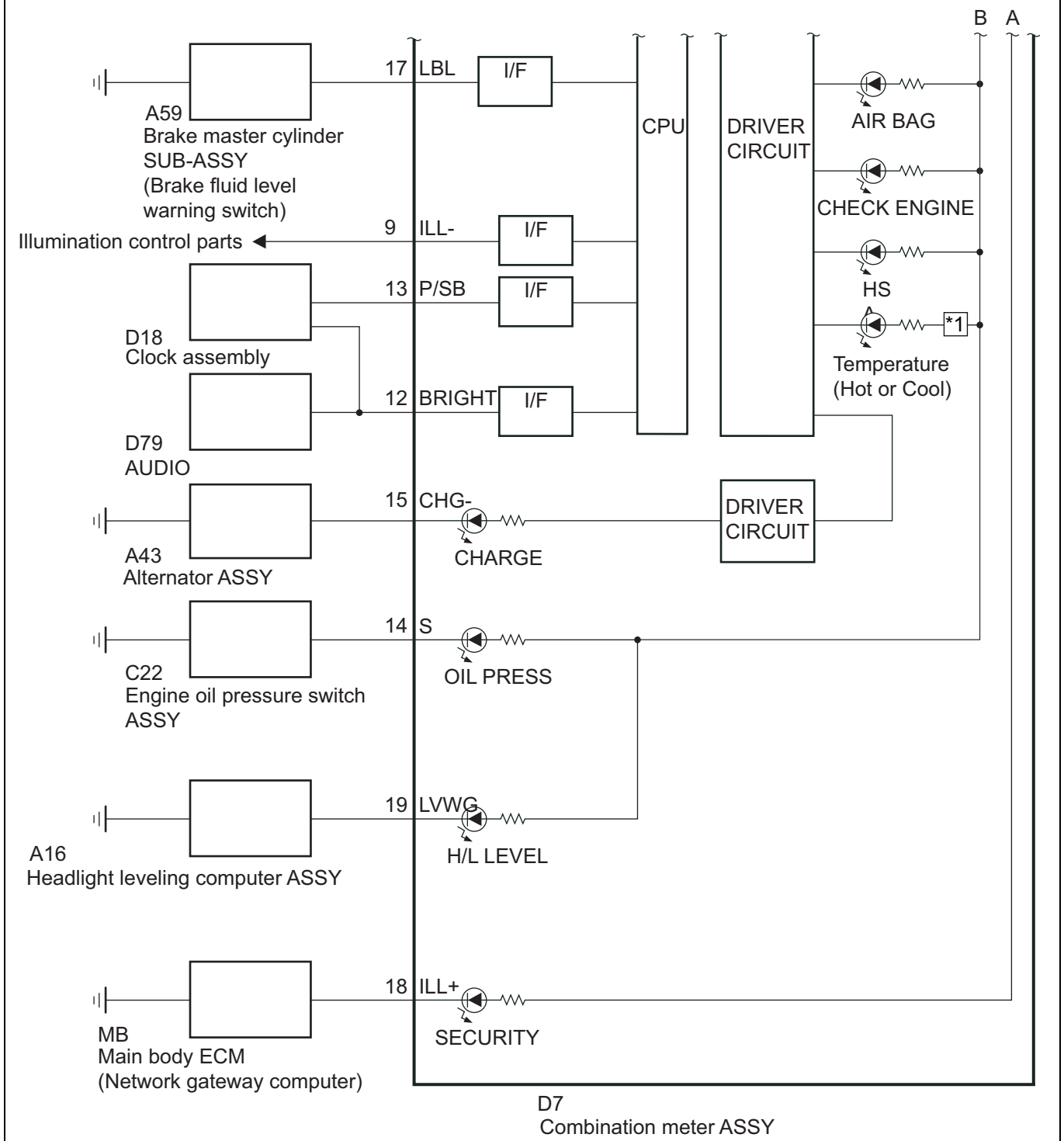

*1: TFT meter

IDI10262

ME

ECM terminal arrangement

1. Combination meter ASSY
   (1) Input/output signal check

*a

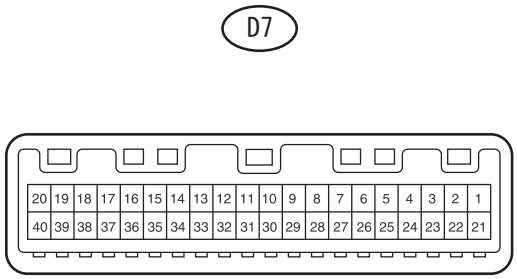

(a)With the connector connected, check each terminal by applying the tester probe from the back of the vehicle wiring harness connector.

ME

Standard value

Terminal No. (Terminal symbol)	Input/Output	Item	Inspection conditions	Standard value
D7-1 (B) ←→Chassis ground	Input	Voltage	Always	10 to 14 V
D7-2 (IG) ←→Chassis ground	Input	Voltage	IG OFF →ON	1 V or less →10 to 14 V
D7-6 (CANH) ←→Chassis ground	Input/Output	Waveform	Engine stop, IG ON	Pulse generation
D7-7 (CANL) ←→Chassis ground	Input/Output	Waveform	Engine stop, IG ON	Pulse generation
D7-9 (ILL-) ←→Chassis ground	Output	Voltage	IG ON, Light control rheostat OFF →ON	1 V or less →10 to 14 V
D7-13 (P/SB) ←→Chassis ground	Output	Voltage	IG ON, Passenger's seat occupied and seat belt not buckled →buckled	1 V or less →10 to 14 V
D7-14 (S) ←→Chassis ground	Input	Voltage	IG ON, Engine pressure warning light ON →OFF	1 V or less →10 to 14 V
D7-17 (LBL) ←→Chassis ground	Input	Voltage	IG ON, Brake fluid level warning light ON →OFF	1 V or less →10 to 14 V
D7-18 (ILL+) ←→Chassis ground	Input	Voltage	IG ON, Security indicator light Blinking →OFF	1 V or less →10 to 14 V
D7-19 (LVWG) ←→Chassis ground	Input	Voltage	IG ON, Head light leveling warning light ON →OFF	1 V or less →10 to 14 V
D7-20 (ES1) ←→Chassis ground	-	Resistance	Always	Less than 1 Ω
D7-21 (LR) ←→Chassis ground	Input	Voltage	IG ON, Turn signal light RH blinking →Turn signal light RH OFF	1 V or less ←→10 to 14 V →1 V or less
D7-22 (LL) ←→Chassis ground	Input	Voltage	IG ON, Turn signal light LH ON →Turn signal light LH OFF	1 V or less ←→10 to 14 V →1 V or less

Terminal No. (Terminal symbol)	Input/Output	Item	Inspection conditions		Standard value
D7-23 (+DP) ←→D7-29*2	Input	Resistance	ENTER switch BACK switch	All OFF	Approx. 100000 Ω
			ENTER switch	ON	Less than 3 Ω
			BACK switch	ON	1000Ω
D7-24 (TAM) ←→D7-25	Input	Voltage	IG ON, Ambient temperature 25°C		1.35 to 1.75 V
D7-26 (+DP2) ←→D7-29*2	Input	Resistance	↑ ←→ ↓	All OFF	Approx. 100000 Ω
			↑	ON	Approx. 330 Ω
			←	ON	Less than 3 Ω
			→	ON	Approx. 31000 Ω
			↓	ON	Approx. 1000 Ω
D7-27 (L) ←→D7-28	Input	Voltage	Fuel F →E		1 V or less →4.5 to 9 V
D7-29 (TFT SW GND) ←→Chassis ground *2	-	Resistance	Always		Less than 1 Ω
D7-30 (E) ←→Chassis ground	-	Resistance	Always		Less than 1 Ω
D7-31 (TR) ←→Chassis ground	-	Resistance	Light control rheostat upper fully open →Light control rheostat lower fully open		510Ω →100 Ω
D7-32 (T) ←→Chassis ground	-	Voltage	IG OFF →ON		1 V or less →10 to 14 V
D7-33 (TC) ←→Chassis ground	-	Resistance	Light control rheostat upper fully open →Light control rheostat lower fully open		Less than 1 Ω→10 kΩ or more
D7-34 (DISP) ←→Chassis ground *1	-	Resistance	DISP switch ON →OFF		Less than 1 Ω→10 kΩ or more
D7-35 (CS) ←→Chassis ground	Input	Resistance	Speed unit display changeover switch ON: km/h OFF: MPH		Less than 1 Ω→10 kΩ or more
D7-36 (TRIP) ←→Chassis ground	-	Resistance	ODO/TRIP switch ON →OFF		Less than 1 Ω→10 kΩ or more
D7-37 (DBKL) ←→Chassis ground	Input	Voltage	IG ON, driver's seat belt not buckled →Buckled		1 V or less →10 to 14 V
D7-38 (PBKL) ←→Chassis ground	Input	Voltage	IG ON, passenger's seat occupied, and seat belt not buckled →buckled		1 V or less →11 to 14 V
D7-40 (ES2) ←→Chassis ground	-	Resistance	Always		Less than 1 Ω

*1: Normal meter

*2: TFT meter

Data monitor / active test

1. Inspection with SSM4

(1) Data monitor

(a)On the SSM4, navigate to the [Data monitor] display, and check the computer data.

SSM4 screen: [Each System] →[Combination Meter] →[Data monitor]

Item name [Symbol]	Description/display range	Normal value	Remarks
[Auto/Trip selector SW status]	ODO/TRIP Change SW state Display range: OFF/ ON	ON: When the switch is pressed OFF: When the switch is released	If it is abnormal, the trip switch may be faulty
[Bright (tail cancel) SW status]	Tail relay SW state Display range: OFF/ ON	ON: Light control switch TAIL OFF: Light control switch OFF	If it is abnormal, the tail relay or wiring harness may be faulty
[Buckle Switch , Passenger] [P-Belt SW]	Passenger's seat buckle SW state Display range: OFF/ ON	ON: Passenger's seat buckle switch ON OFF: Passenger's seat buckle switch OFF	If it is abnormal, the passenger's seat buckle switch or wiring harness may be faulty
[Display SW state] *1	Display changeover SW state Display range: OFF/ ON	ON: When the switch is pressed OFF: When the switch is released	If it is abnormal, the trip switch or wiring harness may be faulty

Item name [Symbol]	Description/display range	Normal value	Remarks
[Multi Display Switch (Up)] *2	Multi SW state (up) Display range: OFF/ ON	ON: When the switch is pressed OFF: When the switch is released	If it is abnormal, the steering switch or wiring harness may be faulty
[Multi Display Switch (Down)] *2	Multi SW state (down) Display range: OFF/ ON		
[Multi Display Switch (Left)] *2	Multi SW state (left) Display range: OFF/ ON		
[Multi Display Switch (Right)] *2	Multi SW state (right) Display range: OFF/ ON		
[Multi Display Switch (Enter)] *2	Multi SW state (ENTER) Display range: OFF/ ON		
[Multi Display Switch (Back)] *2	Multi SW state (BACK) Display range: OFF/ ON		
[+B volt]	Input voltage Display range: 0 to 25.5V	Input voltage is displayed 11 to 14 V	-
[Vehicle speed input value]	Vehicle speed input value Display range: 0 to 255[km/h]	0 to 255[km/h] Roughly synchronized with actual vehicle speed	Check the reading error of the speed meter
[Engine speed input value]	Engine speed input Display range: 0 to 12750[r/min]	Engine running state Roughly synchronized with engine speed	Check the reading error of the tachometer
[Engine water temperature input value]	Engine coolant temperature input Display range: 0 to 127.5°C	Equivalent to ambient temperature: When engine is cold When fully warmed up: 80 to 100°C (176 to 212°F)	If it is abnormal, the coolant temperature signal system may be faulty
[Fuel Input] [Fuel Input]	Input value of fuel sender Display range: 0 to 127.5[L]	Fuel level is displayed 4.0 to 50[L]	If it is abnormal, the fuel sender gauge or wiring harness may be faulty
[Ambient Temperature] [Ambi Temp]	Ambient temperature Display range: -40 to 87.5°C	Almost equals to the ambient temperature	-
[Illuminations control volume input value]	Rheostat input status Display range: 0 to 100 %	Volume value of the rheostat is displayed 0 to 100 %	If it is abnormal, the light control rheostat or wiring harness may be faulty
[Quantity of Outside Light] [OUT LIGHT]	External dimming output state Display range: 0 to 100 %	External dimming volume value is displayed 0 to 100 %	If it is abnormal, the light control rheostat or wiring harness may be faulty
[Key reminder buzzer sounding interval]	Key reminder sound Display range: 600 ms, 900 ms, 1200 ms	Buzzer sounding interval is displayed FAST, NORMAL, SLOW	-
[Tail reminder buzzer]	Tail reminder buzzer sound Display range: ON/OFF	Tail reminder buzzer operation is displayed ON, OFF	-
[Speed warning buzzer]	Speed warning buzzer sound Display range: ON/OFF	Speed warning buzzer operation is displayed ON, OFF	-

*1: Normal meter

*2: TFT meter

NOTE:

Items without settings are not displayed in the SSM4 or do not function.

(2) Active test

(a)Using SSM4, display the [Active Test] screen according to the screen and perform check.

SSM4 screen: [Each System] →[Combination Meter] →[Active Test]

Item name	Contents of testing	Check item
[Speedometer]	Movement of the speed meter pointer	0, 40, 80, 120, 160, 200, 240 (km/h)*1
[Tacho meter]	Movement of the tachometer pointer	0, 1000, 2000, 3000, 4000, 5000, 6000, 7000 (r/min)*1

ME

Item name	Contents of testing	Check item
[Fuel Meter Operation]	Movement of the fuel meter pointer (Refer to fuel receiver gauge [Display 1] or [Display 2])	• Sender E point [Display A] • Meter E scale [Display B] • Warning lighting position [Display C] • Meter 1/4 scale [Display D] • Meter 1/2 scale [Display E] • Meter 3/4 scale [Display F] • Meter F scale [Display G] • Sender F point [Display H]
[AT indicator No.1]	Display on the multi display	Illuminates 1, 2, 3, 4, 5, 6, D, N, R, P (position), sport shift M and sport shift D.
[Display]	Display on the multi display	Illuminates 9, 8, 7, 6, 5, 4, 3, 2, 1, 0 or all (For TFT meter, all turn on)
[High-beam indicator]	Display on the meter indicator	BEAM
[Front Fog Light indicator]	Display on the meter indicator	FR FOG
[Rear Fog Light indicator]	Display on the meter indicator	RR FOG
[Airbag warning]	Display on the meter indicator	AIRBAG
[Driver side seat belt warning]	Display on the meter indicator	D SEAT BELT
[P seat seat-belt warning]	Display on the clock indicator	P SEAT BELT
[Door (ALL) warning] *2	Display on the meter indicator	DOOR
[Remaining fuel warning] *2	Display on the meter indicator	FUEL
[ABS Warning Lamp]	Display on the meter indicator	ABS
[Slip Indicator Light]	Display on the meter indicator	SLIP
[TRC OFF indicator]	Display on the meter indicator	TRC OFF
[Tire Pressure warning]	Display on the meter indicator	Tire pressure
[Brake Warning Light]	Display on the meter indicator	Brake
[SPORT indicator] *2	Display on the meter indicator	SPORT
[SNOW indicator] *2	Display on the meter indicator	SNOW
[A/T Oil Temperature warning] *2	Display on the meter indicator	AT OIL TEMP
[Electric power steering warning]	Display on the meter indicator	EPS
[Cruise indicator] *2	Display on the meter indicator	CRUISE (green)
[Shift indicator (up)] +2	Display on the multi display	Shift (up)
[Shift indicator (down)] *2	Display on the multi display	Shift (down)
[SET indicator] *2	Display on the meter indicator	SET
[VSC OFF indicator]	Display on the meter indicator	VSC OFF
[Cruise warning] *2	Display on the meter indicator	CRUISE (yellow)
[Smart system indicator]	Display on the meter indicator	Smart warning (green)
[Smart system warning]	Display on the meter indicator	Smart warning (yellow)
[Check engine warning]	Display on the meter indicator	Check engine
[Hill Start Assist Working Lamp]	Display on the meter indicator	HSA
[Charge Warning Lamp]	Display on the meter indicator	CHARGE
[Water thermometer] *2	Movement of the water thermometer pointer (Refer to water temperature receiver gauge [Display 3])	• 55°C {122°F} [Display A] • 60°C {140°F} [Display B] • 70°C {158°F} [Display C] • 80°C {176°F} [Display D] • Intermediate stable range [Display E] • 110°C {230°F} [Display F] • 120°C {248°F} [Display G] • 127°C {261°F} [Display H]

*1: When performing an active test, check if the actual meter reading is within the allowable range of meter reading (refer to ME - 3).

*2: Normal meter

NOTE:

- Items without settings are not displayed in the SSM4 or do not function.
- Telltales with no setting do not operate.
- If items do not operate normally, it can be determined that the combination meter ASSY is faulty.

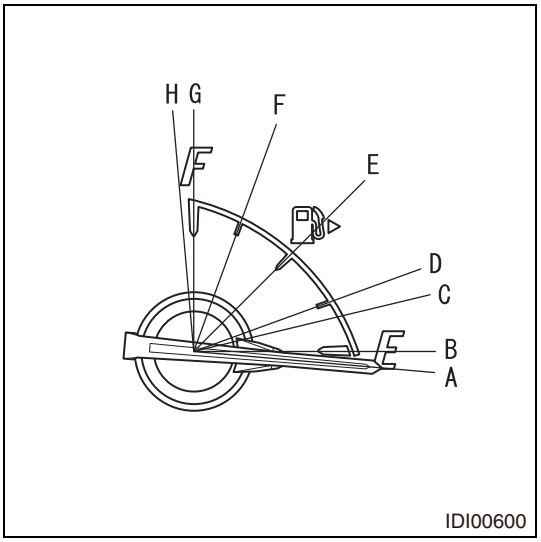

(b)[Display 1]: Fuel receiver gauge (normal meter)

Display	Gauge indicator position
A	Sender E point
B	Meter E scale
C	Warning illumination point
D	Meter 1/4 scale
E	Meter 1/2 scale
F	Meter 3/4 scale
G	Meter F scale
H	Sender F point

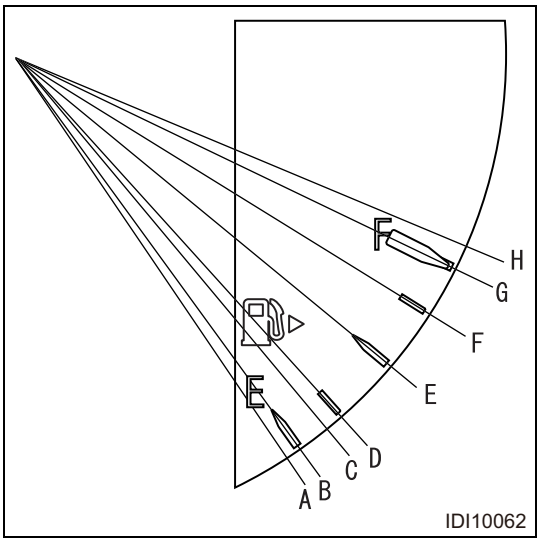

(c)[Display 2]: Fuel receiver gauge (TFT meter)

Display	Gauge indicator position
A	Sender E point
B	Meter E scale
C	Warning illumination point
D	Meter 1/4 scale
E	Meter 1/2 scale
F	Meter 3/4 scale
G	Meter F scale
H	Sender F point

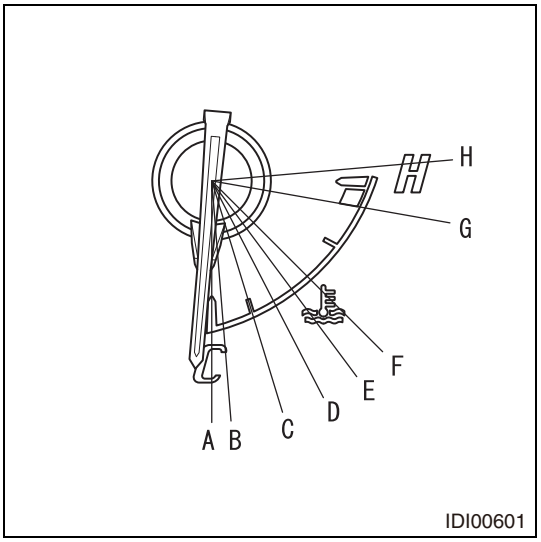

(d)[Display 3]: Water temperature receiver gauge

Display	Gauge indicator position
A	50°C {122°F}
B	60°C {140°F}
C	70°C {158°F}
D	80°C {176°F}
E	Intermediate stable range
F	110°C {230°F}
G	120°C {248°F}
H	127°C {261°F}

DTC	B1500	Fuel Sender Open Detected

Description of functions

The combination meter ASSY receives signals from the fuel sender gauge and drives the fuel receiver gauge. If the fuel sender gauge signals are found continuously abnormal for approximately 10 seconds, diagnostic code is output.

Diagnostic codes	1.Detecting conditions 2.Abnormal condition	Faulty part
B1500	1. 10 seconds or more has passed after the engine started, and the IG voltage is 10.5 V or more 2. Fuel sender gauge malfunction	• Combination meter ASSY • Fuel sender gauge ASSY • Fuel sender gauge ASSY NO.2 • Fuel suction tube ASSY (with pump and gauge) • Fuel return vent tube • Wiring harness or connector

Circuit figure

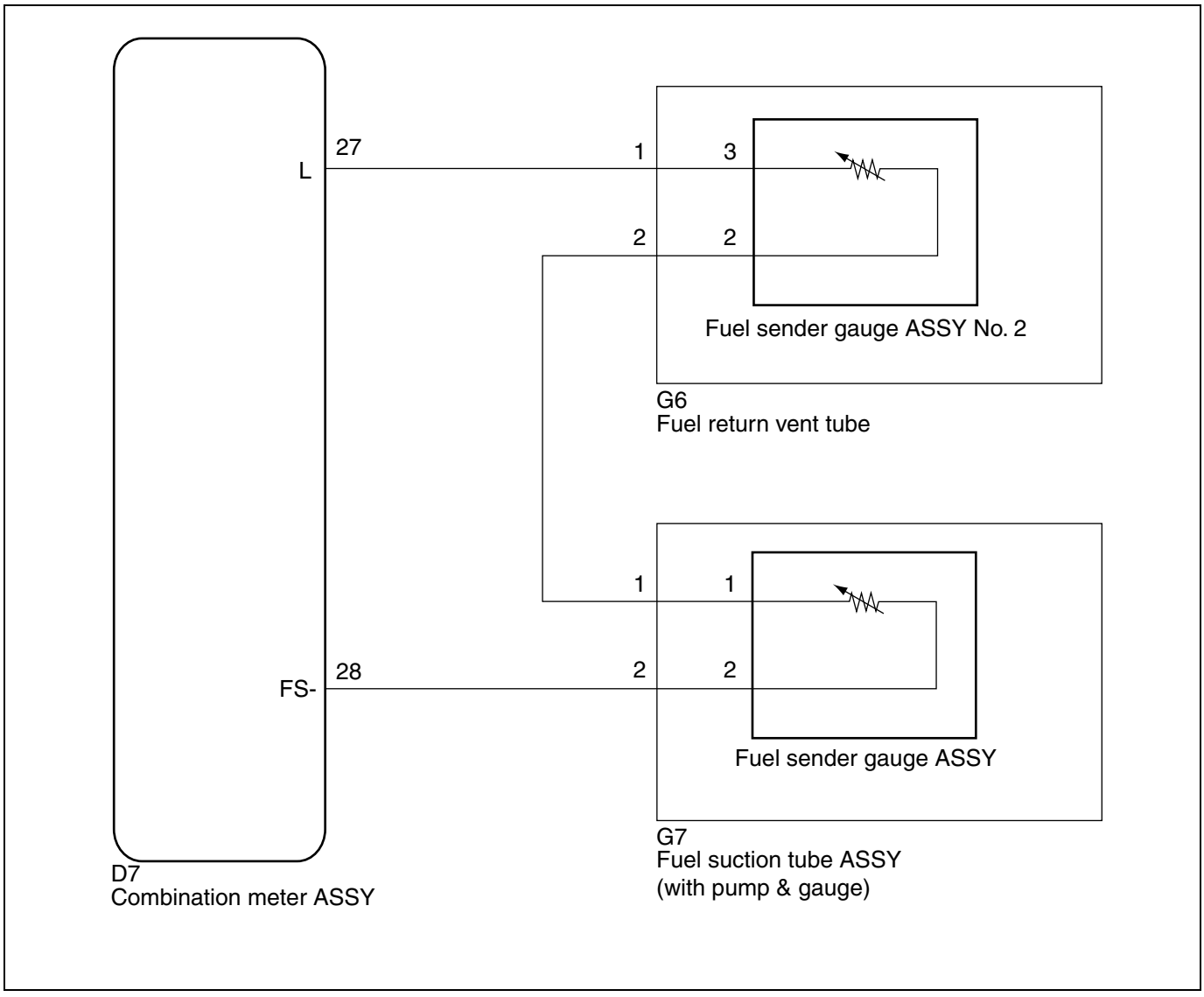

ME

Inspection steps

1	Reading of SSM4 data

(1) On the SSM4, navigate to the [Data monitor] display, and check the computer data. (Refer to ME - 27)

SSM4 screen: [Each System] →[Combination Meter] →[Data monitor]

Item name [Symbol]	Description/display range	Normal value	Remarks
[Fuel Input] [Fuel Input]	Input value of fuel sender Display range: 0 to 127.5 [L]	Fuel level is displayed	If it is abnormal, the fuel sender gauge may be faulty

Criteria: Data monitor value is almost equal to the value on the fuel receiver gauge.

NG → Go to Step 2.

OK

Replacement of the combination meter ASSY (Refer to ME - 63)

2	Unit inspection of the fuel sender gauge ASSY

(1) Remove the fuel sender gauge ASSY. (Refer to FU - 75)
(2) Perform the unit inspection of the fuel sender gauge ASSY. (Refer to FU - 79)

NG → Replacement of the fuel sender gauge ASSY (refer to FU - 75)

OK

3	Unit inspection of the fuel suction tube ASSY (with pump and gauge)

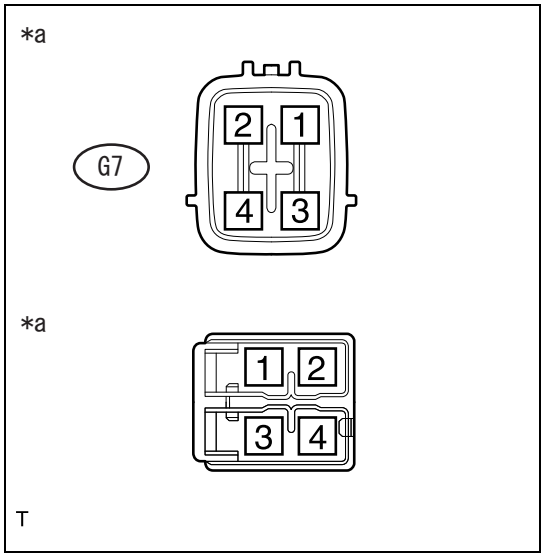

(1) Resistance check
  (a) Remove the fuel suction tube ASSY (with pump and gauge).
  (b) Measure the resistance between the terminals.

Resistance

Inspection terminals	Inspection conditions	Standard value
G7-2 - 2	Always	Less than 1 Ω
G7-1 - 1	Always	Less than 1 Ω

Captions in illustration

*a	Connector not connected (Fuel suction tube ASSY (with pump and gauge))

NG → Replacement of the fuel suction tube ASSY (with pump and gauge) (Refer to FU - 75)

OK

4	Unit inspection of the fuel sender gauge ASSY NO.2

(1) Remove the fuel sender gauge ASSY NO.2. (Refer to FU - 75)
(2) Perform the unit inspection of the fuel sender gauge ASSY NO.2. (Refer to FU - 79)

NG → Replacement of the fuel sender gauge ASSY NO.2 (refer to FU - 75)

OK

5	Unit inspection of the fuel return vent tube

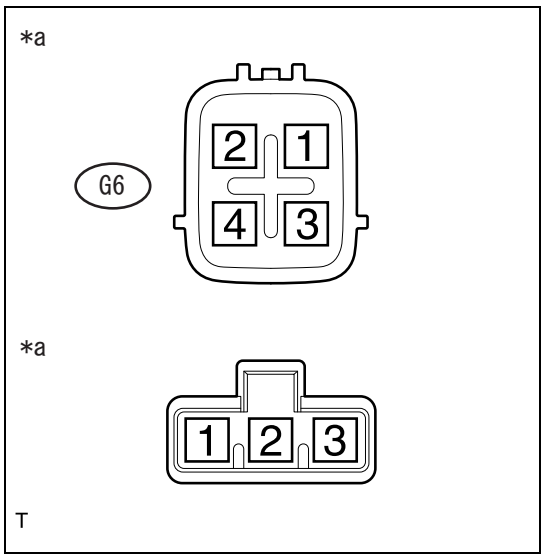

(1) Resistance check
  (a) Remove the fuel return vent tube.
  (b) Measure the resistance between the terminals.

Resistance

Inspection terminals	Inspection conditions	Standard value
G6-1 - 3	Always	Less than 1 Ω
G6-2 - 2	Always	Less than 1 Ω

Captions in illustration

*a	Connector not connected (Fuel return vent tube)

NG → Replacement of the fuel return vent tube (refer to FU - 75)

OK

6	Inspection of the wiring harness and connector (Combination meter ASSY - Fuel suction tube ASSY (with pump and gauge))

(1) Disconnect the connector D7 of the combination meter ASSY and the connector G7 of the fuel suction tube ASSY (with pump and gauge).
(2) Measure the resistance between the terminals.

Resistance (open circuit check)

Inspection terminals (Terminal symbol)	Inspection conditions	Standard value
D7-28 (FS-) - G7-2	Always	Less than 1 Ω

Resistance (short circuit check)

Inspection terminals (Terminal symbol)	Inspection conditions	Standard value
D7-28 (FS-) - Chassis ground	Always	10 kΩ or more
G7-2 - Chassis ground	Always	10 kΩ or more

NG → Repair or replacement of wiring harness or connector

OK

7	Inspection of the wiring harness and connector (Fuel suction tube ASSY (with pump and gauge) - Fuel return vent tube)

(1) Disconnect the connector G7 of the fuel suction tube ASSY (with pump and gauge) and the connector G6 of the fuel return vent tube.

ME

(2) Measure the resistance between the terminals.

Resistance (open circuit check)

Inspection terminals	Inspection conditions	Standard value
G7-1 - G6-2	Always	Less than 1 Ω

Resistance (short circuit check)

Inspection terminals	Inspection conditions	Standard value
G7-1 - Chassis ground	Always	10 kΩ or more
G6-2 - Chassis ground	Always	10 kΩ or more

NG → Repair or replacement of wiring harness or connector

OK

8	Inspection of the wiring harness and connector (Combination meter ASSY - Fuel return vent tube)

(1) Disconnect the connector D7 of the combination meter ASSY and the connector G6 of the fuel return vent tube.

(2) Measure the resistance between the terminals.

Resistance (open circuit check)

Inspection terminals (Terminal symbol)	Inspection conditions	Standard value
D7-27 (L) - G6-1	Always	Less than 1 Ω

Resistance (short circuit check)

Inspection terminals (Terminal symbol)	Inspection conditions	Standard value
D7-27 (L) - Chassis ground	Always	10 kΩ or more
G6-1 - Chassis ground	Always	10 kΩ or more

NG → Repair or replacement of wiring harness or connector

OK

Replacement of the combination meter ASSY (Refer to ME - 63)

DTC	B1509	Ambient air temperature sensor open detection

Circuit description

The thermistor ASSY is installed at the front of the condenser. It is used to detect the ambient air temperature, to display the ambient air temperature on the multi display of the combination meter ASSY, and to control “AUTO” of the heater & air conditioner. The resistance of the thermistor ASSY varies along with change of the ambient air temperature. When the ambient air temperature is low, the resistance is high. In contrast, when the ambient air temperature is high, the resistance is small. The combination meter ASSY gives voltage output (5 V) to the thermistor ASSY, and reads variation of voltage along with resistance change of the thermistor ASSY.

DTC NO.	1.Detecting conditions 2.Abnormal condition	Inspection parts
B1509	1. 10 seconds or more has passed after the engine started, and the IG voltage is 10.5 V or more 2. Open or short circuit in the thermistor ASSY circuit	• Thermistor ASSY • Wire harness and connector • Combination meter ASSY

Circuit figure

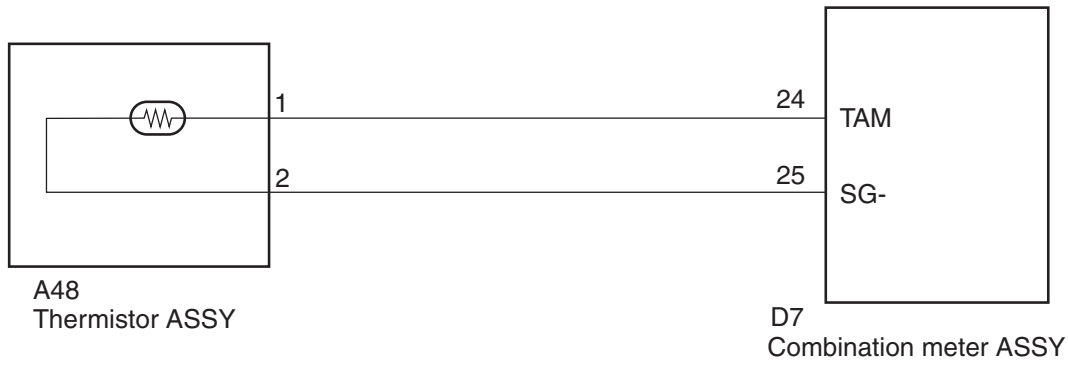

Inspection steps

1	Reading of SSM4 data (ambient temperature input value)

(1) On the SSM4, navigate to the [Data monitor] display, and check the computer data. (Refer to ME - 27)

Criteria

SSM4 screen: [Each System] →[Combination Meter] →[Data monitor]

Item name [Item symbol]	Description of item/display item	Normal value	Remarks
[Ambient Temperature] [Ambi Temp]	Ambient air temperature is displayed. Display range: -40 to 87.5°C {-40 to 189.5°F}	• In open circuit: (-40°C (-40°F)) is displayed. • In short-circuit: (87.5°C (189.5°F)) is displayed.	Thermistor ASSY system

Result

Result	Go to
The same value as the ambient temperature sensor is displayed (during the inspection according to the list of diagnostic codes)	A
The same value as the ambient temperature sensor is displayed (during the inspection according to the symptom table)	B
The displayed value is not the same as the ambient temperature sensor	C

B	Perform the circuit test shown on the symptom table. (Refer to AC - 16)

ME

C → Go to Step 3.

A

2	Checking diagnostic codes

(1) Clear the diagnostic code using the SSM4. (Refer to ME - 22)
(2) Using SSM4, check the diagnostic code again. (Refer to ME - 22)
Criteria: No DTC output

NG → Replacement of the combination meter ASSY (Refer to ME - 63)

OK

Complete

3	Unit inspection of thermistor ASSY

(1) Remove the thermistor ASSY. (Refer to AC - 160)
(2) Inspect the individual thermistor ASSY. (Refer to AC - 161)

NG → Replacement of thermistor ASSY (Refer to AC - 160)

OK

4	Inspection of wire harness and connector (thermistor ASSY - combination meter ASSY)

NOTE:
For inspection procedures and precautions, refer to IN - 36.
(1) Disconnect connector D7 of the combination meter ASSY.
(2) Measure the resistance between the terminals. (For terminal arrangement, refer to ME - 26.)

Resistance (open circuit check)

Inspection terminals (Terminal symbol)	Inspection conditions	Standard value
A48-1 - D7-24(TAM)	Always	Less than 1 Ω
A48-2 - D7-25(SG-)	Always	Less than 1 Ω

Resistance (short circuit check)

Inspection terminals	Inspection conditions	Standard value
A48-1 - Chassis ground	Always	10 kΩ or more
A48-2 - Chassis ground	Always	10 kΩ or more

NG → Repair or replacement of wiring harness or connector

OK

Replacement of the combination meter ASSY (Refer to ME - 63)

DTC	U0073	CAN Communication Error

DTC	U0100	Lost Communication With EGI

DTC	U0122	Lost Communication With Vehicle Dynamics Control Module

DTC	U0131	Lost Communication With EPS

DTC	U0140	Lost Communication With BIU

DTC	U0151	Lost Communication With A/B

Description of functions

- U0073: Combination meter ASSY receives signals from various ECMs via CAN communication.
- U0100: Combination meter ASSY receives signals from the engine control computer via CAN communication.
- U0122: Combination meter ASSY receives signals from the brake actuator ASSY via CAN communication.
- U0131: Combination meter ASSY receives signals from the power steering computer ASSY via CAN communication.
- U0140: Combination meter ASSY receives signals from the main body ECM (network gateway computer) via CAN communication.
- U0151: Combination meter ASSY receives signals from the airbag computer ASSY via CAN communication.

ME

DTC No.	Detecting conditions	Inspection parts
U0073	Lost communication with ECM	CAN communication system
U0100	Lost communication with the engine control computer	• CAN communication system • Engine control computer
U0122	Lost communication with the brake actuator ASSY	• CAN communication system • Brake actuator ASSY
U0131	Lost communication with the power steering computer ASSY	• CAN communication system • Power steering computer ASSY
U0140	Lost communication with the main body ECM (network gateway computer)	• CAN communication system • Main body ECM (Network gateway computer)
U0151	Lost communication with the airbag computer ASSY	• CAN communication system • Airbag computer ASSY

Inspection steps

1	Reading the diagnostic code

(1) Using SSM4, check the output diagnostic code.
NOTE:
- When the diagnostic code of abnormal CAN communication system is output, refer to "How to troubleshoot" of the CAN communication system.
- If diagnostic codes for CAN communication error and other errors are output simultaneously, restore the CAN communication system to the normal state and then troubleshoot other systems.

Next

To CAN communication system (Refer to NW - 30)

Entire combination meter does not operate

DESCRIPTION

This circuit is the power source circuit for the combination meter assembly.

WIRING DIAGRAM

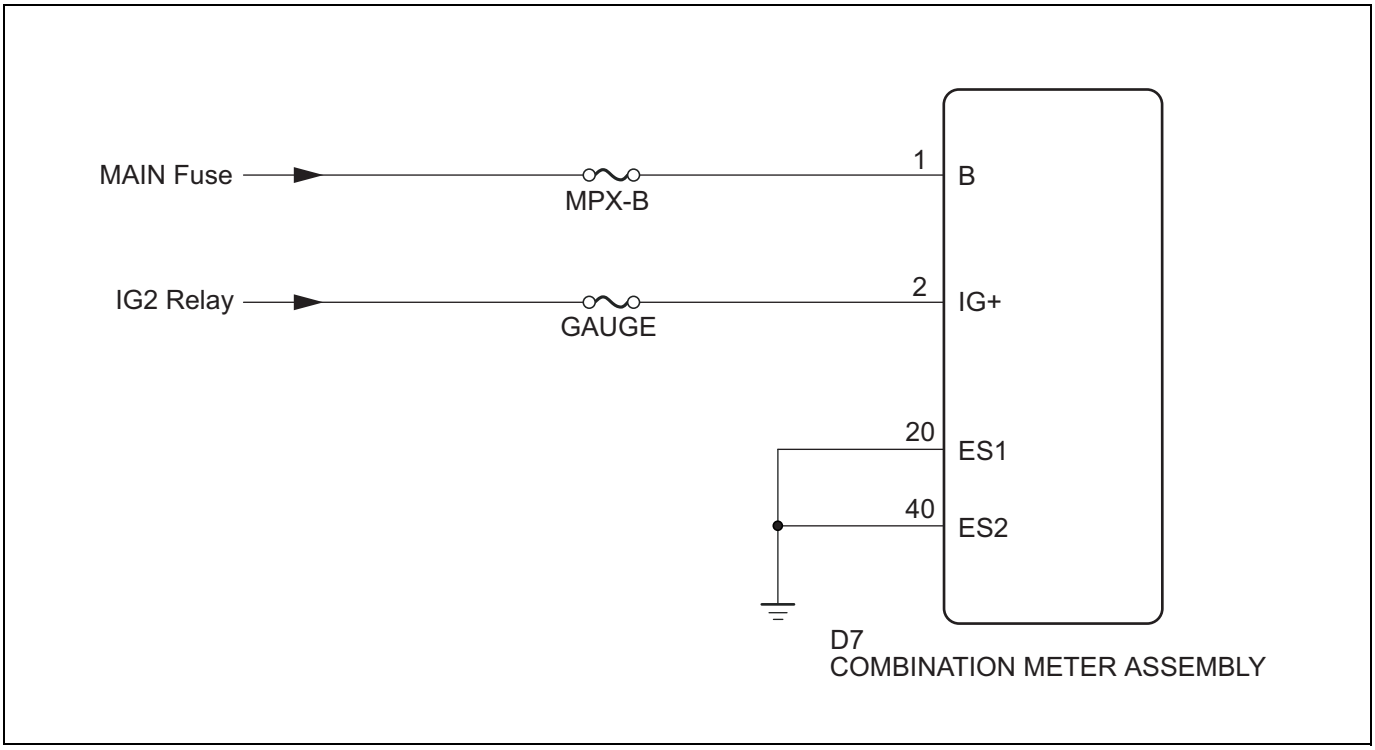

ME

INSPECTION PROCEDURE

CAUTION:

Inspect the fuses for circuits related to this system before performing the following inspection procedure.

1	CHECK HARNESS AND CONNECTOR (COMBINATION METER ASSEMBLY - BATTERY AND BODY GROUND)

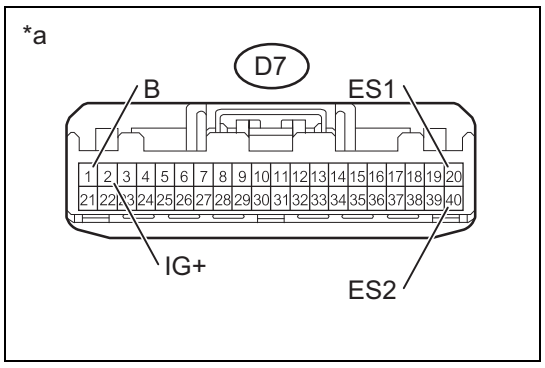

(1) Disconnect the D7 combination meter assembly connector.

(2) Measure the voltage according to the value(s) in the table below.

Standard Voltage

Tester Connection	Switch Condition	Specified Condition
D7-1 (B) - Body ground	Always	11 to 14 V
D7-2 (IG+) - Body ground	Ignition switch ON	11 to 14 V

(3) Measure the resistance according to the value in the table below.

Standard Resistance

Tester Connection	Condition	Specified Condition
D7-20 (ES1) - Body ground	Always	Below 1 Ω
D7-40 (ES2) - Body ground	Always	Below 1 Ω

Text in Illustration

*a	Front view of wire harness connector (to Combination Meter Assembly)

(4) Reconnect the D7 combination meter assembly connector.

NG → REPAIR OR REPLACE HARNESS OR CONNECTOR

OK

REPLACE COMBINATION METER ASSEMBLY (See page ME - 62)

Speed meter malfunction

Description of functions

The combination meter ASSY receives vehicle speed signals from the brake actuator ASSY via CAN communication. The combination meter ASSY displays the vehicle speed based on the received vehicle speed signals.

NOTE:

Even when the speed meter is normal, slight difference may be present between the reading value and the actual vehicle speed. There are two possible causes for this difference. One is an external cause resulting from the tire size, tire pressure, and tire wear. The other is an internal factor resulting from the allowable range of the reading. Therefore, before troubleshooting, you must first check if these causes are related to the error. The tire size, pressure, and wear (external causes) are checked visually. (Refer to AL - 2) The allowable range of reading (internal cause) is checked using a speed meter tester. (Refer to ME - 3)

ME

Circuit figure

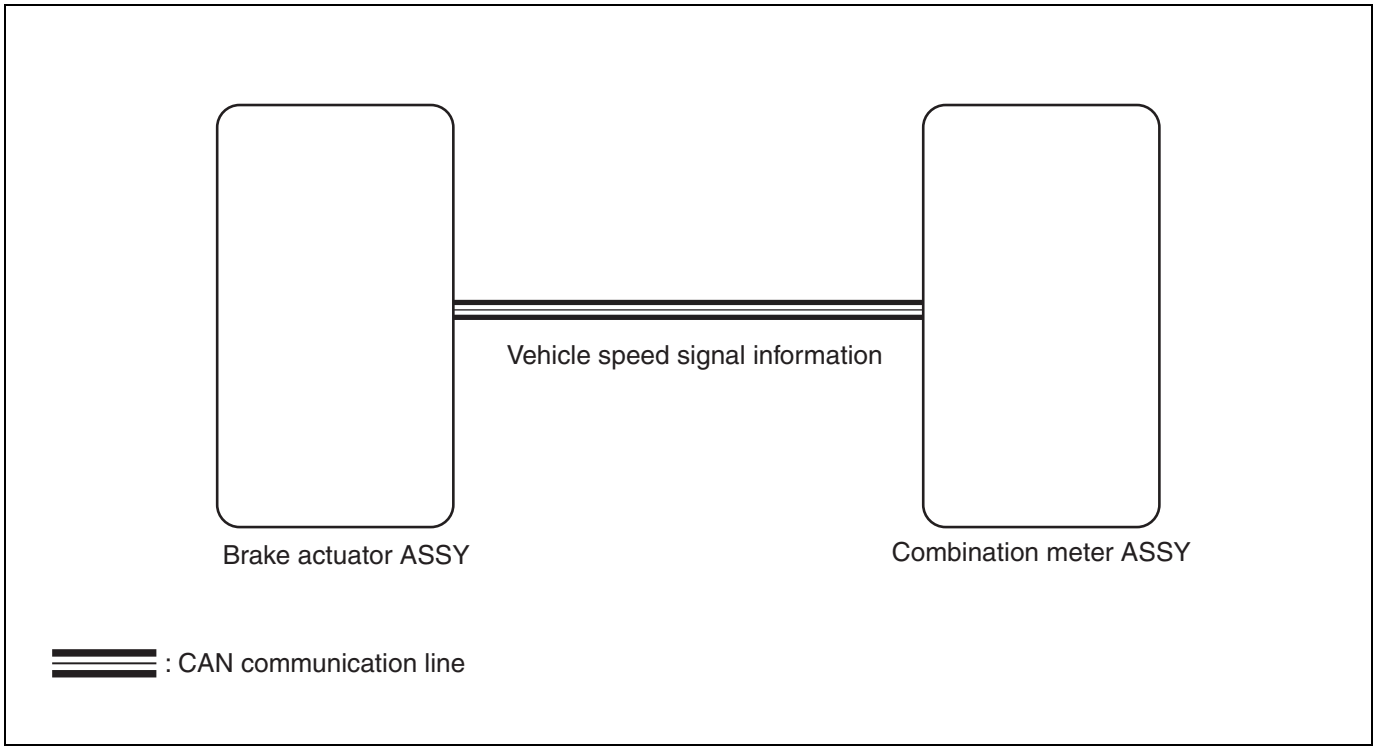

Inspection steps

CAUTION:

If the check result of vehicle speed reading is outside the allowable range, perform an inspection using a speed meter tester. (Refer to ME - 3)

1	Reading diagnostic codes

(1) Using SSM4, check if any diagnostic code related to CAN communication system is output. (Refer to NW - 33)

Result

Result	Go to
Diagnostic code is not output	A
Diagnostic code is output	B

B → To CAN communication system (Refer to NW - 30)

A

2	Implementation of SSM4 active test (speed meter)

(1) Using SSM4, display the [Active Test] screen according to the screen and perform check. (Refer to ME - 27)

SSM4 screen: [Each System] →[Combination Meter] →[Active Test]

Item name	Contents of testing	Check item
[Speedometer]	Vehicle speed indication changeover	240, 200, 160, 120, 80, 40, 0 (km/h)

NOTE:
When performing an [Active Test], check if the actual meter reading is within the allowable range of meter reading (refer to ME - 3).

Result

Result	Go to
Each vehicle speed in [Active Test] can be displayed smoothly	A
Each vehicle speed in [Active Test] can not be displayed smoothly	B

B → Replacement of the combination meter ASSY (Refer to ME - 63)

A

3	Reading of SSM4 data (vehicle speed)

(1) On the SSM4, navigate to the [Data monitor] display, and check the computer data. (Refer to ME - 27)
NOTE:
Check the speed meter and the reference value of [Data monitor].

SSM4 screen: [Each System] →[Combination Meter] →[Data monitor]

Item name [Symbol]	Description/display range	Normal value	Remarks
[Vehicle Speed] [Speed Meter]	Vehicle speed input value Display range: 0 to 255[km/h]	0 to 255[km/h] Roughly synchronized with actual vehicle speed	Check the reading error of the speed meter

Result

Result	Go to
The value of [Data monitor] differs from the actual vehicle speed value	A
The value of [Data monitor] almost equals to the actual vehicle speed value	B

B → Replacement of the combination meter ASSY (Refer to ME - 63)

A

4	Reading the diagnostic code (VSC system)

(1) Using SSM4, check if any diagnostic code related to the VSC system is output. (Refer to BC - 13)

Result

Result	Go to
Diagnostic code is not output	A
Diagnostic code is output	B

B → To VSC system (Refer to BC - 9)

A

5	Reading of SSM4 data (vehicle speed)

(1) On the SSM4, navigate to the [Data monitor] display, and check the computer data. (Refer to BC - 20)
NOTE:
Check the speed meter and the reference value of [Data monitor].

SSM4 screen: [Each System] →[Brake Control System] →[Data monitor]

Item name [Symbol]	Description/display range	Normal value	Remarks
[Vehicle Speed] [Vhcl Spd]	Vehicle speed output value 0 to 326.4 km/h	0 km/h: When stopping No significant fluctuation: When driving at a constant speed	-

Result

Result	Go to
The value of [Data monitor] differs from the speed meter	A
The value of [Data monitor] roughly synchronizes with the speed meter	B

B → Replacement of the brake actuator ASSY (Refer to BC - 93)

A

6	Replacement of combination meter ASSY

(1) Replace with a new or normally functioning combination meter ASSY (refer to ME - 63) and check the operation of the speed meter.

Result

Result	Go to
Operates normally	A
Does not operate normally	B

B → Replacement of the brake actuator ASSY (Refer to BC - 93)

A

Complete (Internal fault of the combination meter ASSY)

Tachometer malfunction

ME

Description of functions

The combination meter ASSY receives engine speed signals from the engine control computer via CAN communication. The combination meter ASSY drives the tachometer based on the engine speed signals it receives.

Circuit figure

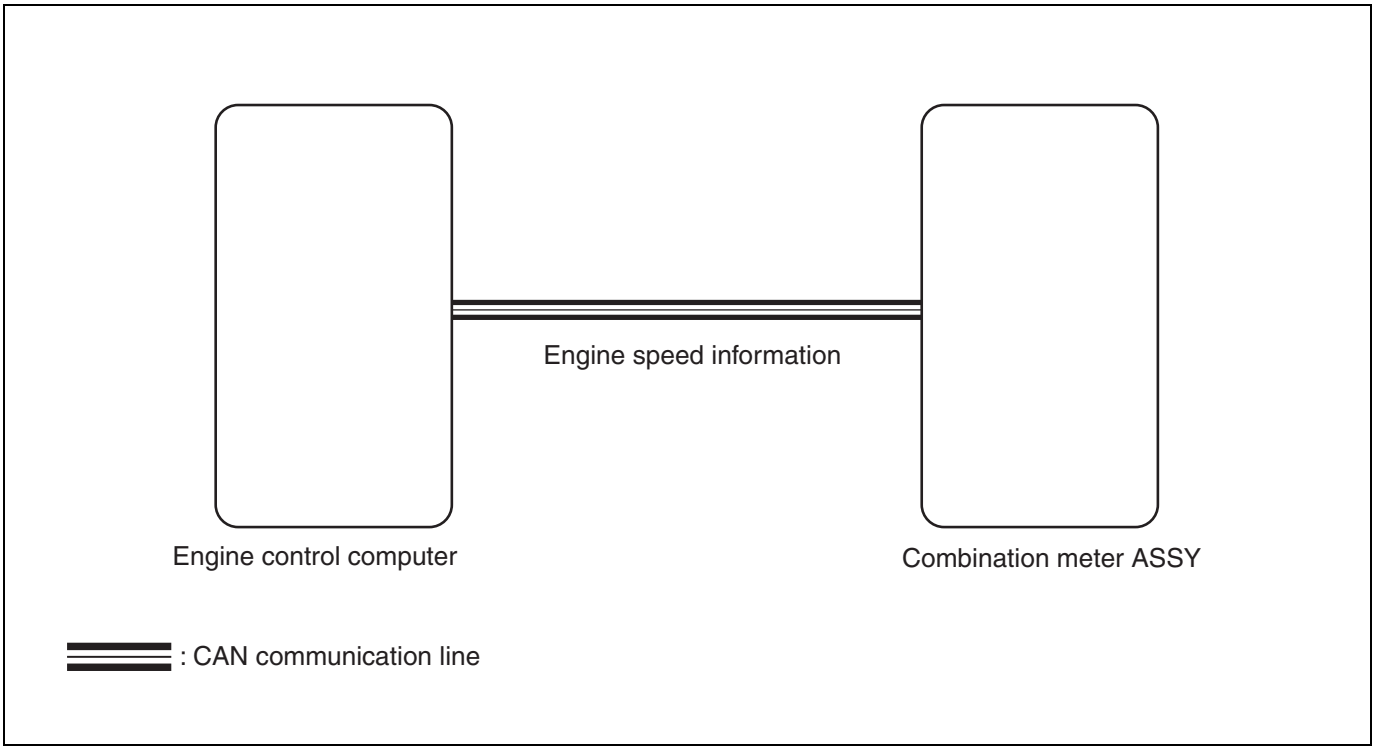

Inspection steps

CAUTION:

Before performing inspections according to this flow chart, check that no abnormal condition is present in the engine. (Refer to ES - 19)

1	Reading diagnostic codes

(1) Using SSM4, check if any diagnostic code related to CAN communication system is output. (Refer to NW-31)

Result

Result	Go to
Diagnostic code is not output	A
Diagnostic code is output	B

B → To CAN communication system (Refer to NW - 30)

A

2	Implementation of SSM4 active test (tachometer)

(1) Using SSM4, display the [Active Test] screen according to the screen and perform check. (Refer to ME - 27)

SSM4 screen: [Each System] →[Combination Meter] →[Active Test]

Item name	Contents of testing	Check item
[Tacho meter]	Engine speed indication changeover	7000, 6000, 5000, 4000, 3000, 2000, 1000, 0 (r/min)

NOTE:
When performing an [Active Test], check if the actual meter reading is within the allowable range of meter reading (refer to ME - 3).

Result

Result	Go to
Each engine speed specified by [Active Test] can be displayed smoothly	A
Each engine speed specified by [Active Test] can not be displayed smoothly	B

B → Replacement of the combination meter ASSY (Refer to ME - 63)

A

3	Reading of SSM4 data (engine speed)

(1) On the SSM4, navigate to the [Data monitor] display, and check the computer data. (Refer to ME - 27)
NOTE:
Check the tachometer and the reference value of [Data monitor].

SSM4 screen: [Each System] →[Combination Meter] →[Data monitor]

Item name [Symbol]	Description/display range	Normal value	Remarks
[Engine Speed] [Tacho Meter]	Engine speed input Display range: 0 to 12750[r/min]	Engine running state Roughly synchronized with engine speed	-

Result

Result	Go to
The reference value of [Data monitor] almost equals to the tachometer	A
The reference value of [Data monitor] differs from the tachometer	B

B → Replacement of the combination meter ASSY (Refer to ME - 63)

A

4	Reading the diagnostic code (EFI system)

(1) Using SSM4, check if any diagnostic code related to the EFI system is output. (Refer to ES - 28)

Result

Result	Go to
Diagnostic code is not output	A
Diagnostic code is output	B

B → To EFI system (Refer to ES - 19)

A

5	Reading of SSM4 data (engine speed)

(1) Using the SSM4, follow the screen display to bring up and check the [Data monitor]. (Refer to ES - 43)
NOTE:
Check the tachometer and the reference value of [Data monitor].

SSM4 screen: [Each System] →[Engine Control System] →[Data monitor]

Item name [Symbol]	Description/display range	Normal value	Remarks
[Engine Speed] [Engine Spd]	Indicates the engine speed Display range: 0 to 16383.8[r/min]	0 r/min Engine stop (IG ON)	NE signal (NE sensor)
		No significant fluctuation When engine is rotating at a constant speed	

Result

Result	Go to
The reference value of [Data monitor] almost equals to the tachometer	A
The reference value of [Data monitor] differs from the tachometer	B

B → To EFI system (Refer to ES - 19)

A

6	Replacement of combination meter ASSY

(1) Replace with a new or normally functioning combination meter ASSY (refer to ME - 63) and check the operation of the tachometer.

Result

Result	Go to
Operates normally	A
Operates abnormally	B

B → Replacement of the engine control computer (Refer to ES - 670)

A

Complete (Internal fault of the combination meter ASSY)

Fuel receiver gauge malfunction

Description of functions

The combination meter ASSY uses the fuel sender gauge ASSY to detect the fuel level in the fuel tank. The fuel sender gauge ASSY has a variable resistor that changes its resistance depending on the fuel level. The fuel sender gauge ASSY receives voltage from the combination meter ASSY and adjusts its voltage based on the resistance that changes according to the fuel level in the fuel tank. The combination meter ASSY detects the voltage between the variable resistor and the resistor inside the combination meter ASSY, and drives the fuel receiver gauge.

Circuit figure

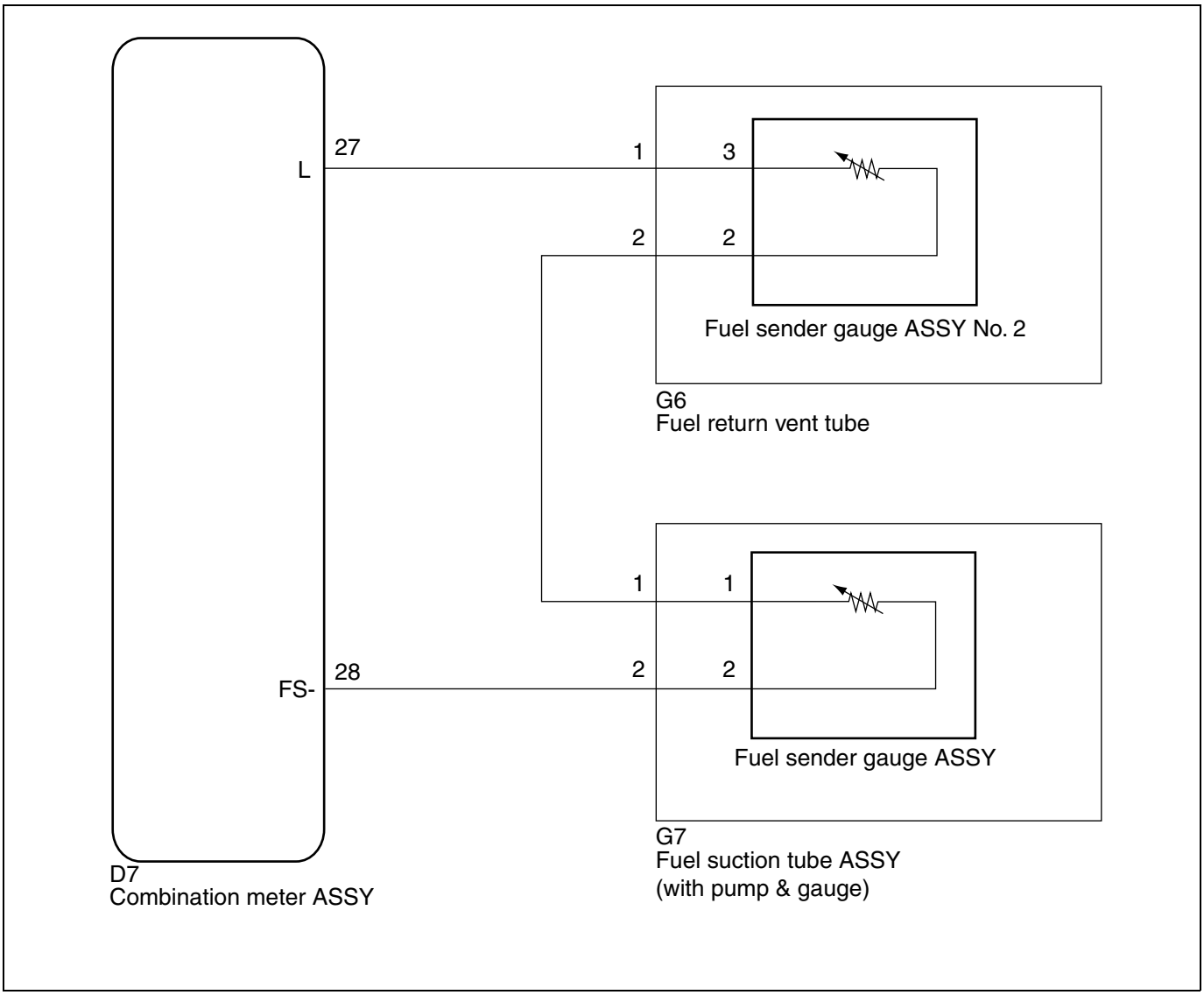

ME

Inspection steps

1	DTC check

(1) Using SSM4, check if the diagnostic code B1500 (Fuel Sender Open Detected) is output.
Criteria: Diagnostic code B1500 (Fuel Sender Open Detected) is not output.

NG → To relevant flowchart (Refer to ME - 30)

OK

2	Implementation of SSM4 active test

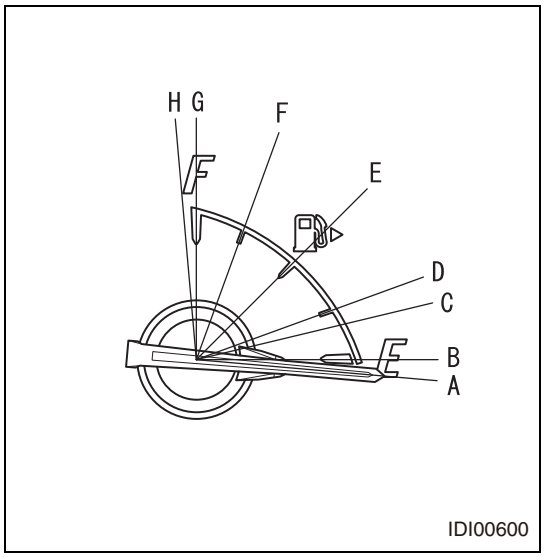

(1) Normal meter: Using SSM4, display the [Active Test] screen according to the screen and perform check.

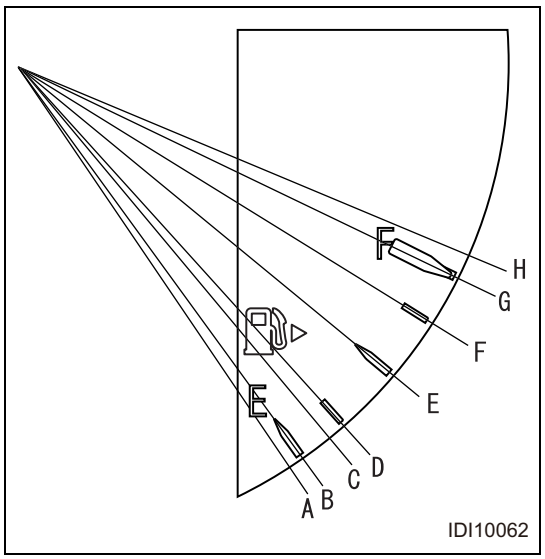

(2) TFT meter: Using SSM4, display the [Active Test] screen according to the screen and perform check.

ME

SSM4 screen: [Each System] →[Combination Meter] →[Active Test]

Item name	Item description	Reference values
[Fuel Meter Operation]	Fuel meter indication changeover	• Sender F point [Display H] • Meter F scale [Display G] • Meter 3/4 scale [Display F] • Meter 1/2 scale [Display E] • Meter 1/4 scale [Display D] • Warning lighting position [Display C] • Meter E scale (+warning illumination) [Display B] • Sender E point (+warning illumination) [Display A]

Criteria: Each remaining fuel specified by [Active Test] can be displayed smoothly

NG → Replacement of the combination meter ASSY (Refer to ME - 63)

OK

3	Reading of SSM4 data (Refer to ME - 31)

NG → Go to Step 4.

OK

Replacement of the combination meter ASSY (Refer to ME - 63)

4	Unit inspection of the fuel sender gauge ASSY (refer to ME - 32)

B → Replacement of the fuel sender gauge ASSY (refer to FU - 75)

A

5	Unit inspection of the fuel suction tube ASSY (with pump and gauge) (Refer to ME - 32)

B → Replacement of the fuel suction tube ASSY (with pump and gauge) (Refer to FU - 75)

A

6	Unit inspection of the fuel sender gauge ASSY NO.2 (refer to ME - 32)

B → Replacement of the fuel sender gauge ASSY NO.2 (refer to FU - 75)

A

7	Unit inspection of the fuel return vent tube (refer to ME - 33)

B → Replacement of the fuel return vent tube (refer to FU - 75)

A

8	Inspection of the wiring harness and connector (Combination meter ASSY - Fuel suction tube ASSY (with pump and gauge)) (Refer to ME - 33)

NG → Repair or replacement of wiring harness or connector

OK

9	Inspection of the wiring harness and connector (Fuel suction tube ASSY (with pump and gauge) - Fuel return vent tube) (Refer to ME - 33)

NG → Repair or replacement of wiring harness or connector

OK ↓

10	Inspection of the wiring harness and connector (Combination meter ASSY - Fuel return vent tube) (Refer to ME - 34)

NG → Repair or replacement of wiring harness or connector

OK ↓

Replacement of the combination meter ASSY (Refer to ME - 63)

Water temperature receiver gauge malfunction

ME

Description of functions

The combination meter ASSY receives engine coolant temperature signals from the engine control computer via CAN communication. The combination meter ASSY drives the water temperature gauge based on the engine coolant temperature signals it receives.

Circuit figure

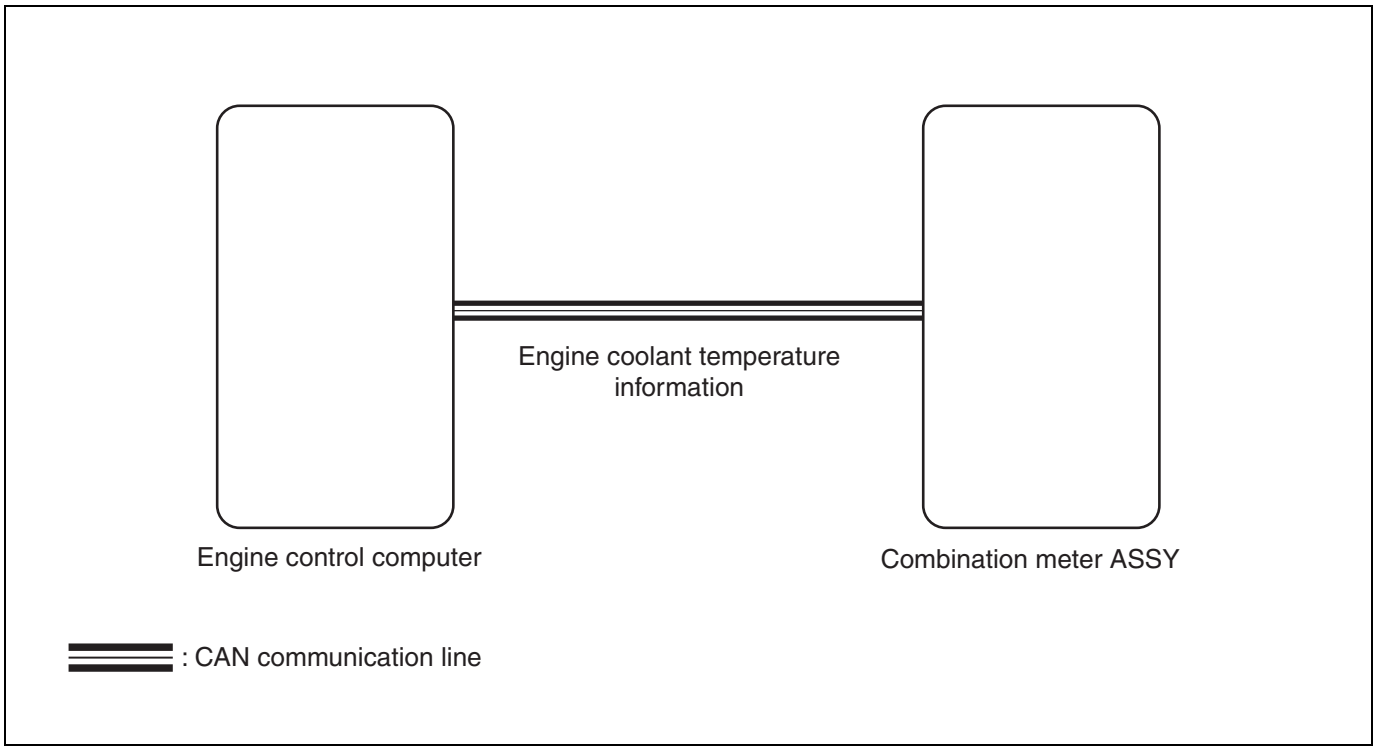

Inspection steps

CAUTION:

Before performing inspections according to this flow chart, check that no abnormal condition is present in the engine. (Refer to ES - 19)

1	Reading diagnostic codes

(1) Using SSM4, check if any diagnostic code related to CAN communication system is output. (Refer to ME - 22)

Result

Result	Go to
Diagnostic code is not output	A
Diagnostic code is output	B

B → To CAN communication system (Refer to NW - 30)

A

2	Implementation of SSM4 active test

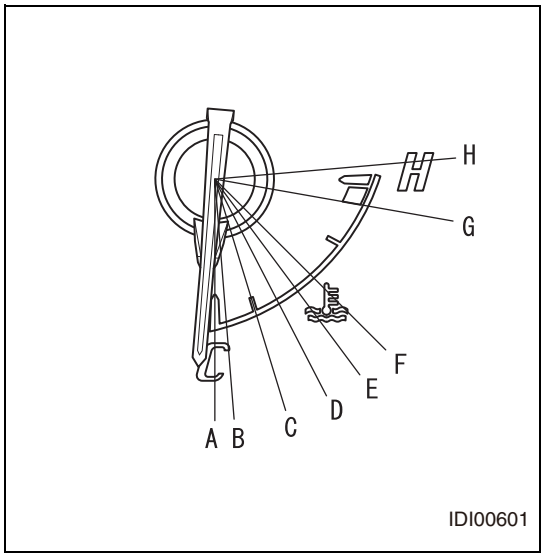

(1) Using SSM4, display the [Active Test] screen according to the screen and perform check. (Refer to ME - 27)
NOTE:
For TFT meter, go to STEP3.

SSM4 screen: [Each System] →[Combination Meter] →[Active Test]

Item name	Contents of testing	Check item
[Water thermometer]	Coolant temperature indication change-over	• 127°C {261°F} [Display H] • 120°C {248°F} [Display G] • 110°C {230°F} [Display F] • Intermediate stable range [Display E] • 80°C {176°F} [Display D] • 70°C {158°F} [Display C] • 60°C {140°F} [Display B] • 50°C {122°F} [Display A]

Criteria: Each value specified by [Active Test] can be displayed smoothly

NOTE:
For TFT meter, go to STEP3.

NG → Replacement of the combination meter ASSY (Refer to ME - 63)

OK

3	Reading of SSM4 data (engine coolant temperature)

(1) On the SSM4, navigate to the [Data monitor] display, and check the computer data. (Refer to ME - 27)

SSM4 screen: [Each System] →[Combination Meter] →[Data monitor]

Item name [Symbol]	Description/display range	Normal value	Remarks
[Coolant Temp.] [Coolant Temp]	Engine coolant temperature input Display range: 0 to 127.5°C {0 to 261.5°F}	Equivalent to ambient temperature: When engine is cold When fully warmed up: 80 to 100°C {176 to 212°F}	If it is abnormal, the coolant temperature signal system may be faulty

Criteria: The normal value of [Data monitor] is almost equal to the value of the water temperature receiver gauge.

NG → Replacement of the combination meter ASSY (Refer to ME - 63)

OK

4	Reading the diagnostic code (EFI system)

(1) Using SSM4, check if any diagnostic code related to the EFI system is output. (Refer to ES - 28)

Result

Result	Go to
Diagnostic code is not output	A
Diagnostic code is output	B

B → To EFI system (Refer to ES - 19)

A

5	Reading of SSM4 data (engine coolant temperature)

(1) On the SSM4, navigate to the [Data monitor] display, and check the computer data. (Refer to ES - 43)

ME

SSM4 screen: [Each System] →[Engine Control System] →[Data monitor]

Item name [Symbol]	Description/display range	Normal value	Remarks
[Coolant Temp] [Coolant Temp]	Indicates the engine coolant temperature Display range: -40 to 215°C {-40 to 419°F}	75 to 100°C {167 to 212°F} After warming-up	• Engine coolant temperature after warm-up is 75 to 100°C • After the engine is stopped and left unattended for a long time, the engine coolant temperature, intake air temperature and ambient temperature will be almost the same • If the engine coolant temperature reads -40°C or 215°C, an open or short circuit may be present in the sensor system

Criteria: The normal value of [Data monitor] is almost equal to the value of the water temperature receiver gauge.

NG → To EFI system (Refer to ES - 19)

OK

6 Replacement of combination meter ASSY

(1) Replace with a new or normally functioning combination meter ASSY (refer to ME - 63) and check the operation of the water temperature receiver gauge.

Result

Result	Go to
Operates normally	A
Operates abnormally	B

B → Replacement of the engine control computer (Refer to ES - 670)

A

Complete (Internal fault of the combination meter ASSY)

Illumination level does not change when operating the light control rheostat

Description of functions

When the knob of light control rheostat is turned up or down, the illumination intensity of the combination meter ASSY changes.

Circuit figure

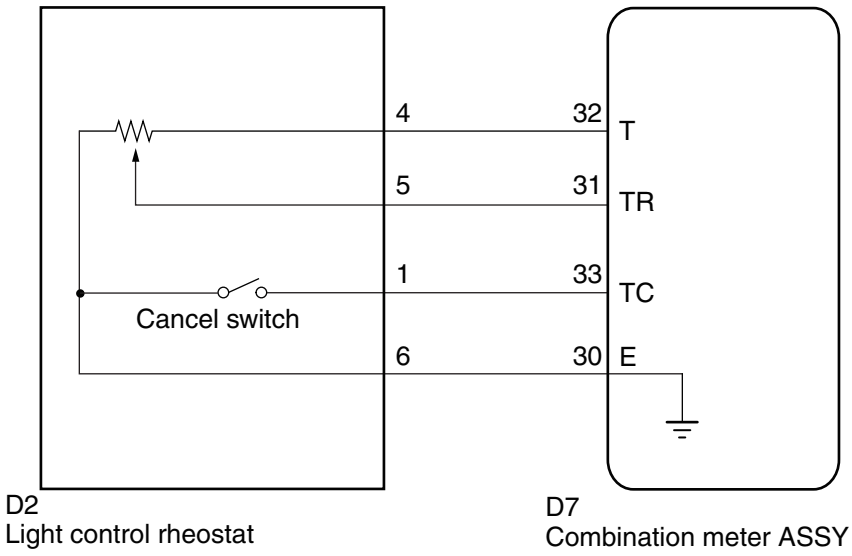

IDI00732

ME

Inspection steps

1	Reading of SSM4 data

(1) Using the SSM4, follow the screen display to bring up and check the [Data monitor].

SSM4 screen: [Each System] →[Combination Meter] →[Data monitor]

Item name [Symbol]	Description/display range	Normal value	Remarks
[Tail Cancel SW] [Tail Cancel SW]	Tail cancel switch state Display range: OFF to ON	ON: Tail cancel switch ON OFF: Tail cancel switch OFF	If it is abnormal, the tail cancel switch may be faulty
[Rheostat value] [Rheostat]	Rheostat input value Display range: 0 to 255	Light control rheostat switch Dark (0) to Bright (255)	If it is abnormal, the light control rheostat switch may be faulty

Criteria: The normal value is displayed properly.

NG → Go to Step 2.

OK

Replacement of the combination meter ASSY (Refer to ME - 63)

2	Unit inspection of the light control rheostat

(1) Remove the light control rheostat. (Refer to ME - 68)

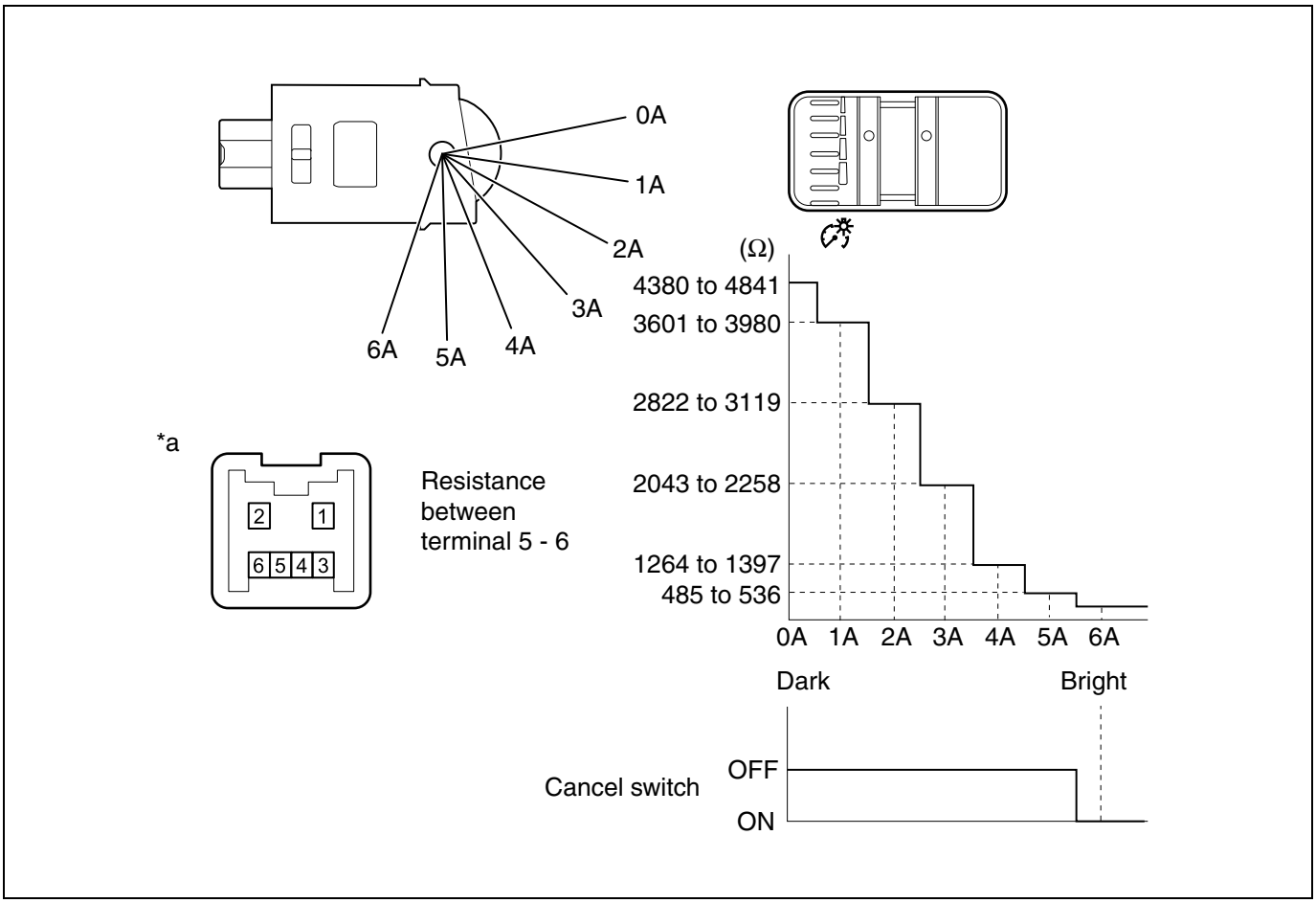

ME

Captions in illustration

*a	Connector not connected (Light control rheostat)

(2) Operate the switch and measure the resistance between terminals.
Resistance

Inspection terminals	Inspection conditions	Standard value
1 - 6	Tail cancel switch OFF →ON	10 kΩ or more →Less than 1 Ω
4 - 6	Always	4475 to 4946 Ωor more
5 - 6	Light control rheostat upper fully open →Light control rheostat lower fully open	485 to 536 Ω→4380 to 4841 Ωor more

NG → Replacement of the light control rheostat (Refer to ME - 68)

OK

3	Inspection of the wiring harness and connector (Combination meter ASSY - Light control rheostat)

(1) Disconnect connector D7 of the combination meter ASSY.
(2) Measure the resistance between the terminals.

Resistance

Inspection terminals (Terminal symbol)	Inspection conditions	Standard value
D7-30 (E) - D2-6	Always	Less than 1 Ω
D7-31 (TR) - D2-5	Always	Less than 1 Ω
D7-32 (T) - D2-4	Always	Less than 1 Ω
D7-33 (TC) - D2-1	Always	Less than 1 Ω

NG → Repair or replacement of wiring harness or connector

OK

Replacement of the combination meter ASSY (Refer to ME - 63)

Can not switch ODO / TRIP meter display, or can not reset TRIP meter

Circuit figure

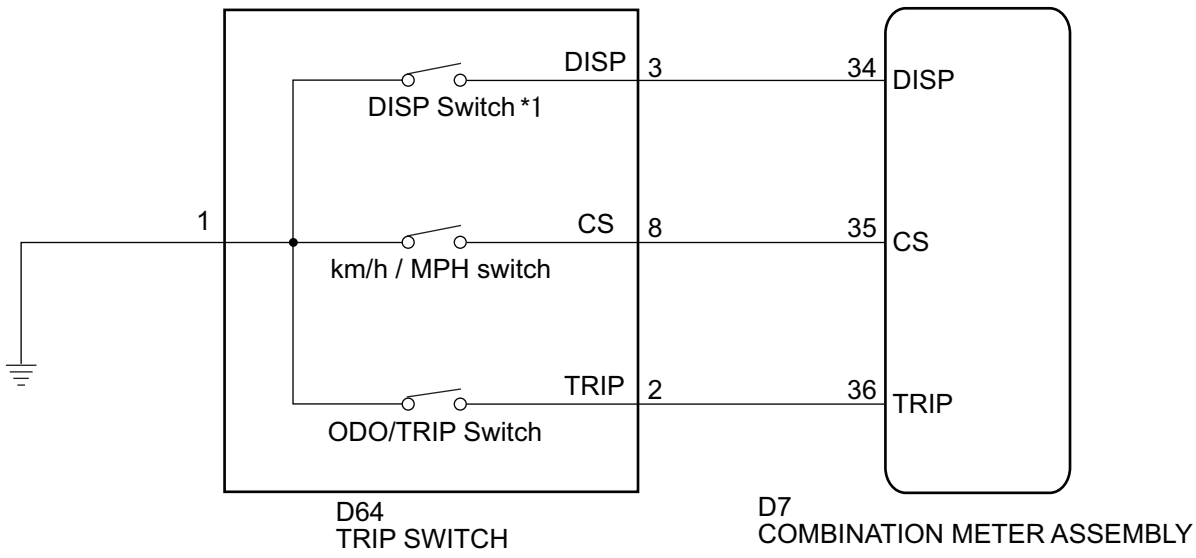

*1: Normal meter

IDI10263

Inspection steps

1	Reading of SSM4 data

(1) Using the SSM4, follow the screen display to bring up and check the [Data monitor].

SSM4 screen: [Each System] →[Combination Meter] →[Data monitor]

Item name [Symbol]	Description/display range	Normal value	Remarks
[ODO/TRIP Change SW] [ODO/TRIP SW]	ODO/TRIP Change SW state Display range: OFF to ON	ON: When the switch is pressed OFF: When the switch is released	If it is abnormal, the trip switch may be faulty
[Multi-display Change Switch] [Multi Disp SW]	Multi display changeover SW state Display range: OFF to ON	ON: When the switch is pressed OFF: When the switch is released	If it is abnormal, the multi display switch may be faulty

Criteria: The normal value is displayed properly.

NG → Go to Step 2.

OK

Replacement of the combination meter ASSY (Refer to ME - 63)

ME

2	Unit inspection of the trip switch

(1) Remove the trip switch. (Refer to ME - 70)

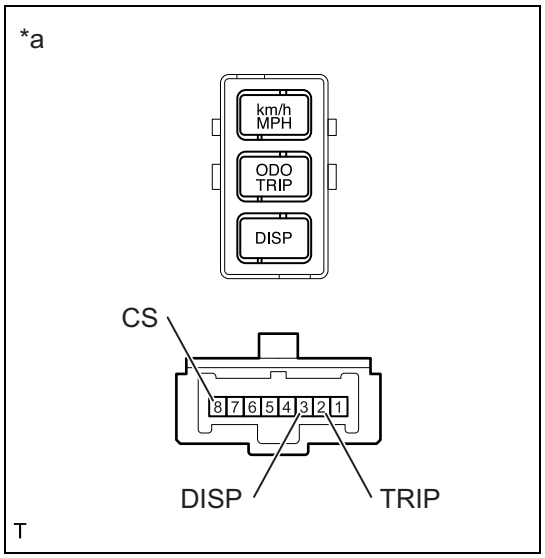

(2) Resistance check
(a) Measure the resistance between the terminals.

Captions in illustration

*a	Connector not connected (Trip switch)

Resistance

Inspection terminals (Terminal symbol)	Inspection conditions	Standard value
2(TRIP) - 1	ODO/TRIP switch is pressed	Less than 1 Ω
2(TRIP) - 1	ODO/TRIP switch is released	10 KΩ or more
3(DISP) - 1	DISP switch is pressed	Less than 1 Ω
3(DISP) - 1	DISP switch is released	10 KΩ or more
8 (cs) - 1	km/h/MPH switch is pressed	Less than 1 Ω
8 (cs) - 1	km/h/MPH switch is pressed	10 KΩ or more

NG → Replacement of the trip switch (Refer to ME - 70)

OK

3	Inspection of the wiring harness and connector (Combination meter ASSY - Trip switch)

(1) Disconnect connector D7 of the combination meter ASSY.
(2) Measure the resistance between the terminals.

Resistance

Inspection terminals (Terminal symbol)	Inspection conditions	Standard value
D7-34 (DISP) - D64-3 (DISP)	Always	Less than 1 Ω
D7-36 (TRIP) - D64-2 (TRIP)	Always	Less than 1 Ω
D7-35 (CS) - D64-8 (CS)	Always	Less than 1 Ω

NG → Repair or replacement of wiring harness or connector

OK

Replacement of the combination meter ASSY (Refer to ME - 63)

The combination meter display is not changed even though the steering switch is operated

Circuit figure

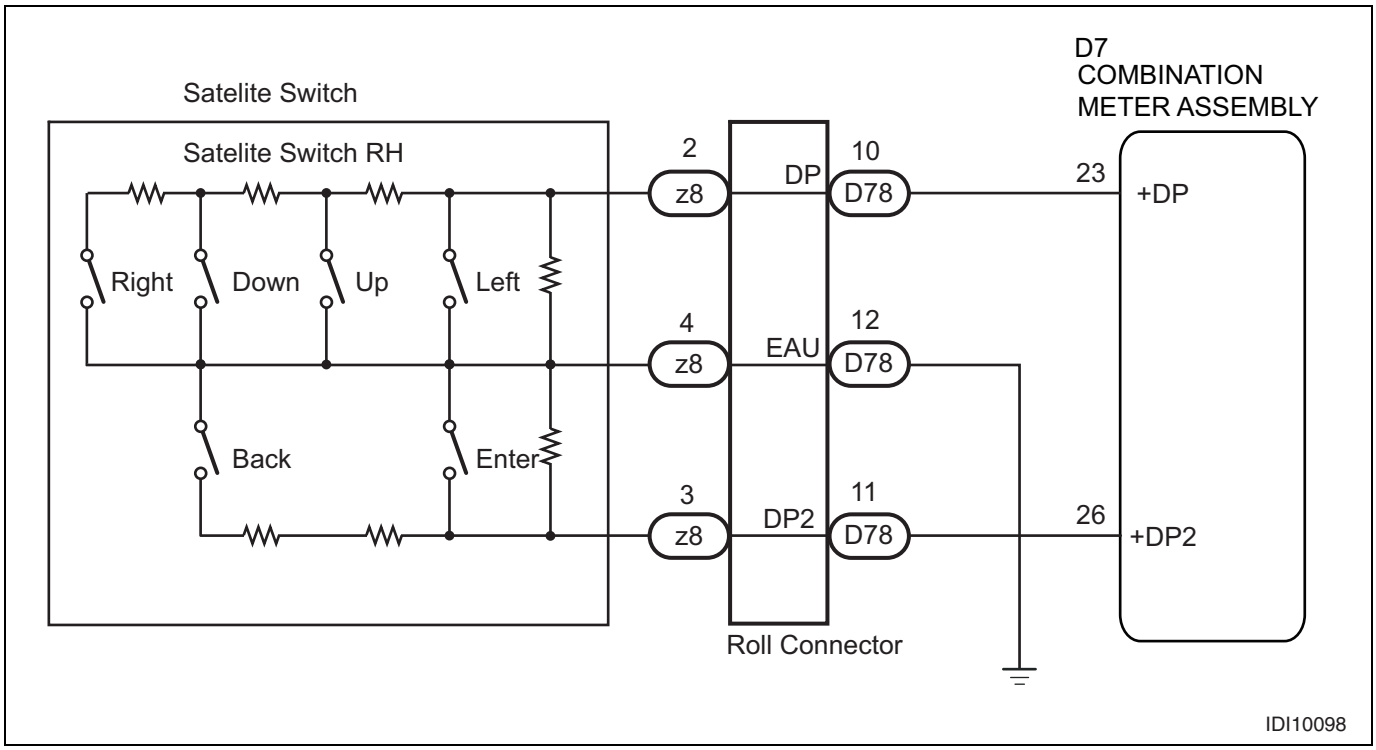

Inspection steps

1	Reading of SSM4 data

(1) Using the SSM4, follow the screen display to bring up and check the [Data monitor].

SSM4 screen: [Each System] →[Combination Meter] →[Data monitor]

Item name [Symbol]	Description/display range	Normal value	Remarks
[Multi Display Switch (Up)]	Multi SW state (up) Display range: OFF to ON	ON: When the switch is pressed OFF: When the switch is released	If it is abnormal, the steering switch or wiring harness may be faulty
[Multi Display Switch (Down)]	Multi SW state (down) Display range: OFF to ON		
[Multi Display Switch (Left)]	Multi SW state (left) Display range: OFF to ON		
[Multi Display Switch (Right)]	Multi SW state (right) Display range: OFF to ON		
[Multi Display Switch (Enter)]	Multi SW state (ENTER) Display range: OFF to ON		
[Multi Display Switch (Back)]	Multi SW state (BACK) Display range: OFF to ON		

Criteria: The normal value is displayed properly.

NG → Replacement of steering pad switch (Refer to SR - 70)

OK

ME

Replacement of the combination meter ASSY (Refer to ME - 63)

Clock system

Parts location

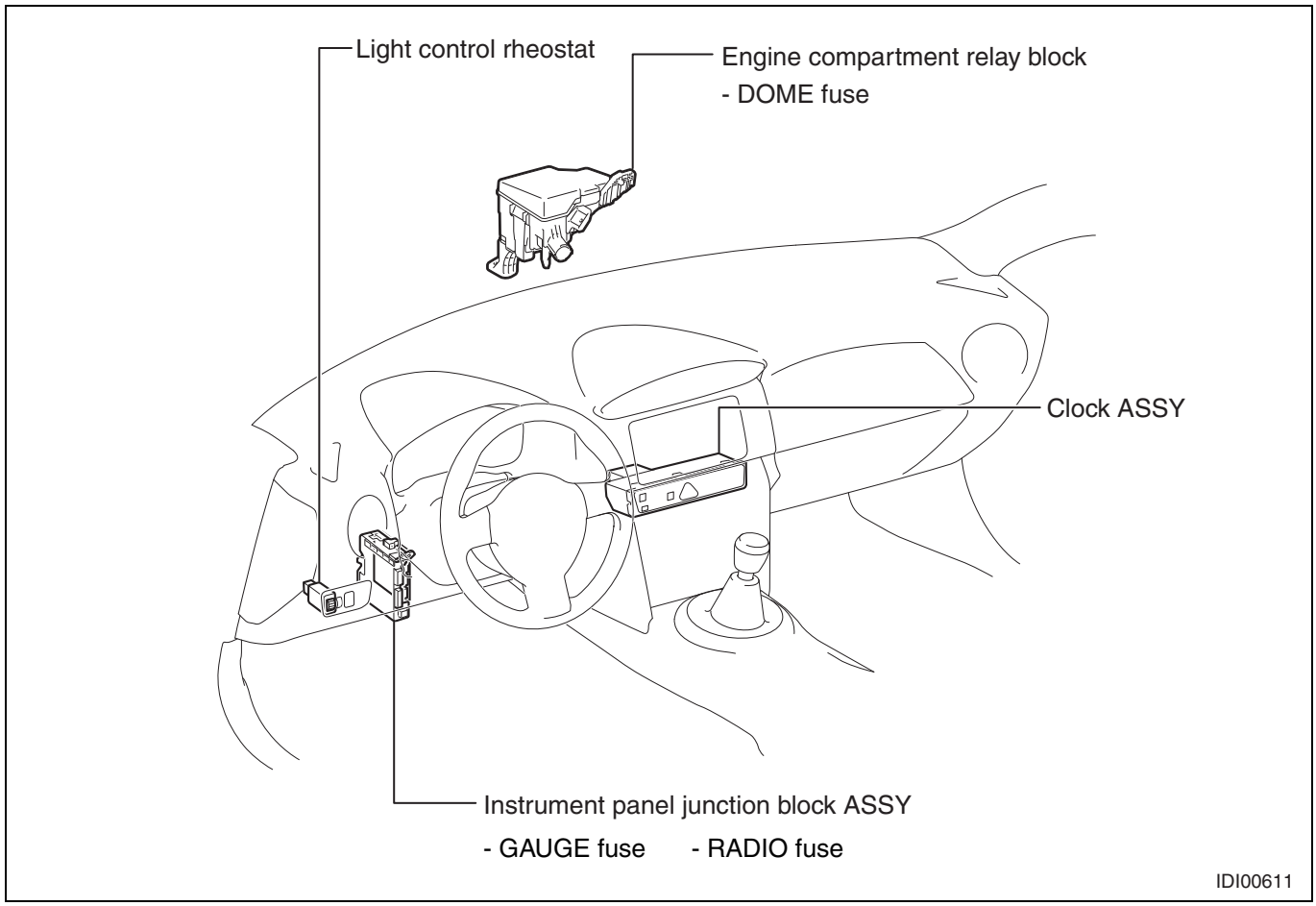

Symptom table

Symptoms	Inspection items	Reference pages
No clock display	Vehicle wiring harness and connector	-
	Replace the clock ASSY	ME - 66
Can not set the time	Check if time setting is performed while vehicle is in stoppage	-
	Replace the clock ASSY	ME - 66
Significant time error	Replace the clock ASSY	ME - 66
Illumination level does not change when operating the light control rheostat	Data monitor of SSM4 (external dimming output value)	ME - 27
	Refer to the troubleshooting flowchart "Illumination level does not change when operating the light control rheostat"	ME - 52
	Vehicle wiring harness and connector	-
	Inspect combination meter ASSY	ME - 26
	Replace the clock ASSY	ME - 66

How to troubleshoot

1	Bring in the car

Next

2	Basic inspection

(1) Basic inspection
(a) Inspect the battery voltage.
Voltage: 11 to 14V (when the engine is stopped)

Next

3	Symptom table

(1) Symptom table (Refer to ME - 59)
Result

Result	Go to
Not applicable to the symptom table.	A
Applicable to the symptom table.	B

B → Go to Step 5.

A

ME

4	Perform troubleshooting with the method below based on malfunctions.

(1) ECM terminal arrangement (Refer to ME - 26)

Next

5	Adjustment, repair, or replacement

Next

Complete

Circuit figure

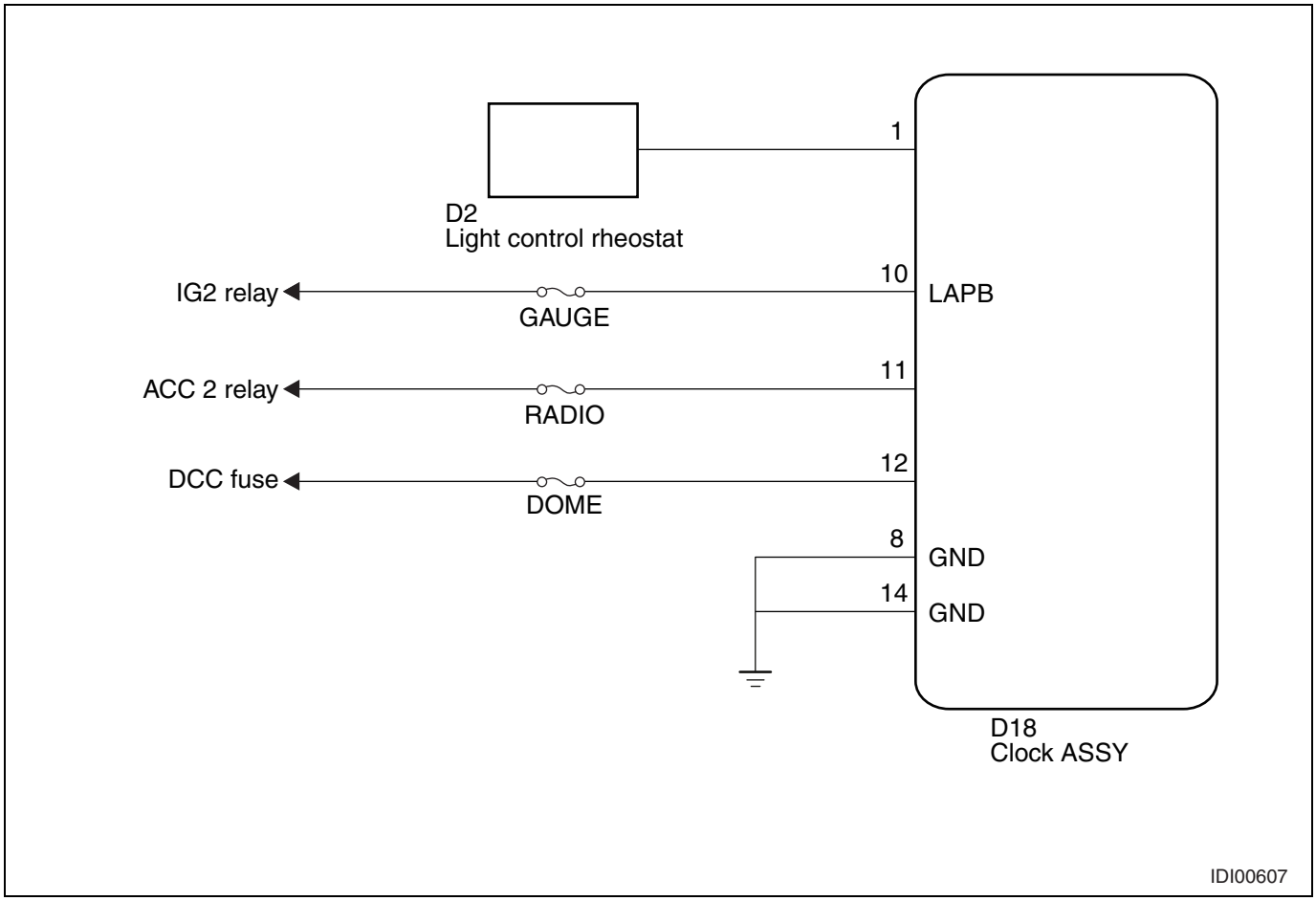

Combination meter ASSY

Exploded view

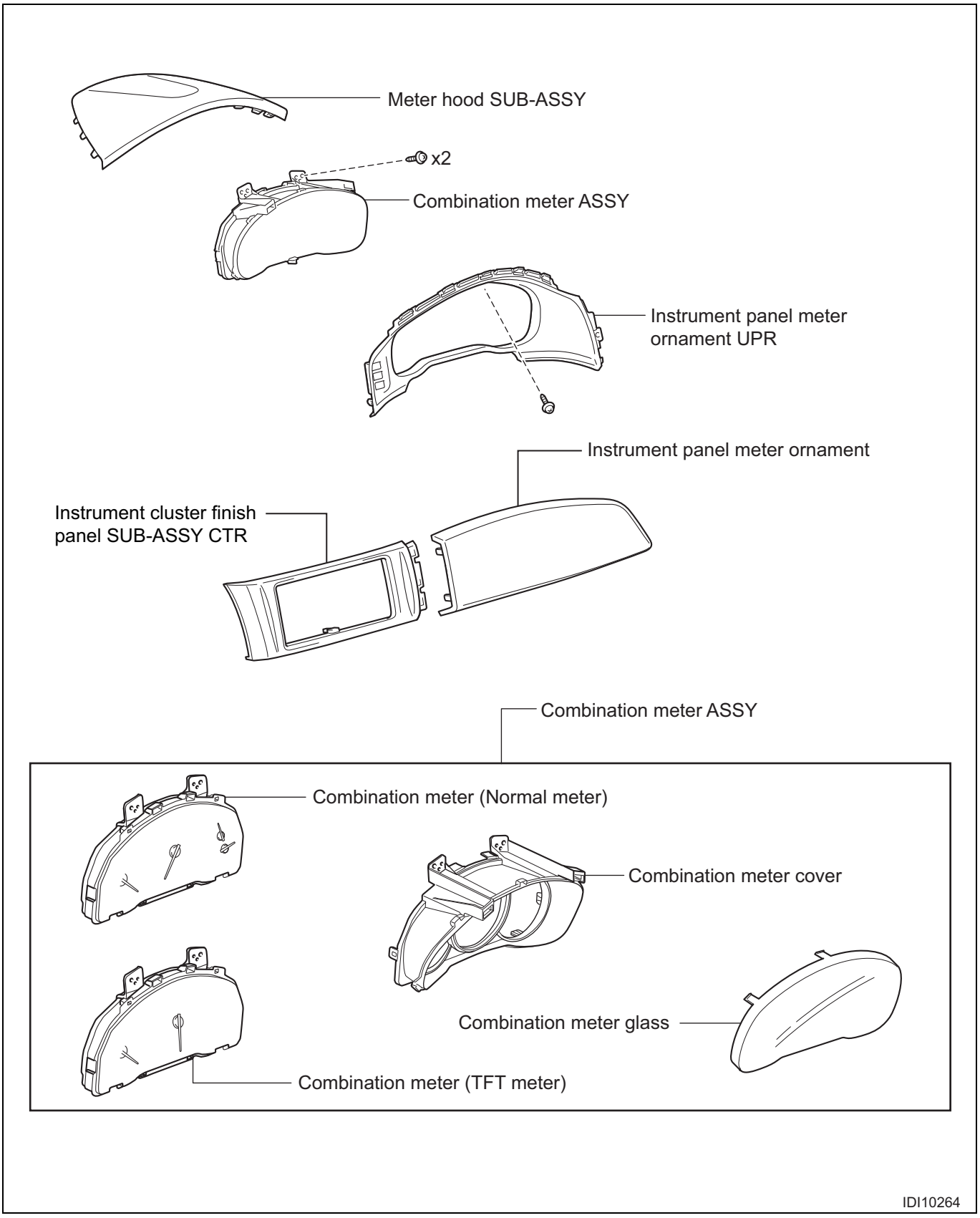

Removal

NOTE:

The procedures described below are for the normal meter. Operate the TFT meter performing the same procedures as the normal meter.

1. Disconnection of the battery ground terminal (Refer to IN - 6)
2. Removal of the instrument panel ornament (Refer to IT - 22)
3. Removal of instrument cluster finish panel SUB-ASSY CTR (Refer to IT - 23)
4. Removal of the meter hood SUB-ASSY (Refer to IT - 24)
5. Removal of the instrument panel meter ornament UPR (Refer to IT - 24)

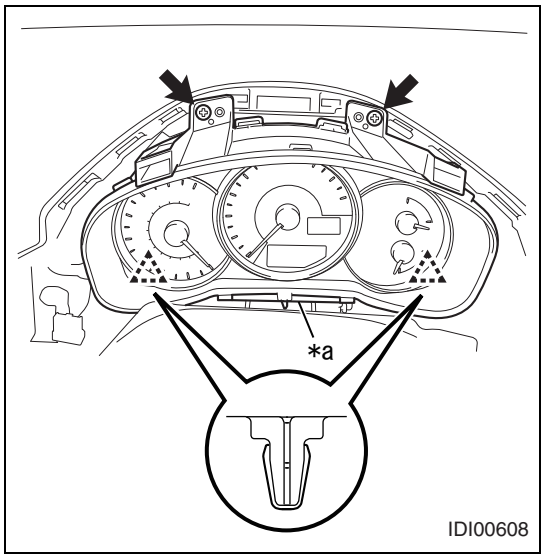

6. Removal of the combination meter ASSY
   (1) Remove the 2 screws.
   (2) Pull the hook at the bottom of the combination meter ASSY to release two clips and pull it out toward the rear.

Captions in illustration

*a	Hook

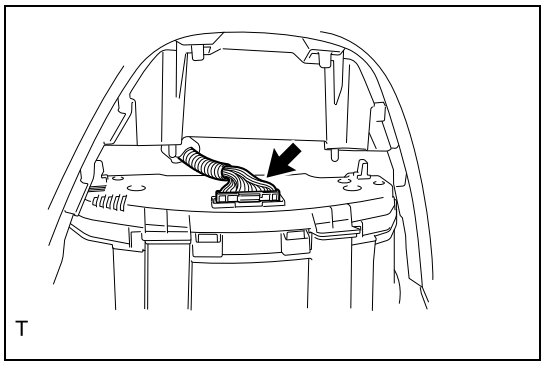

   (3) Disconnect the connector and remove the combination meter ASSY.

Disassembly

NOTE:

The procedures described below are for the normal meter. Operate the TFT meter performing the same procedures as the normal meter.

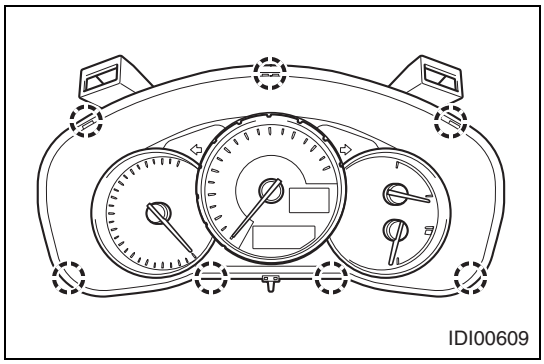

1. Removal of the combination meter glass
   (1) Release seven claws and remove the combination meter glass.
   CAUTION:
   When removing the combination meter glass, do not touch the pointers.

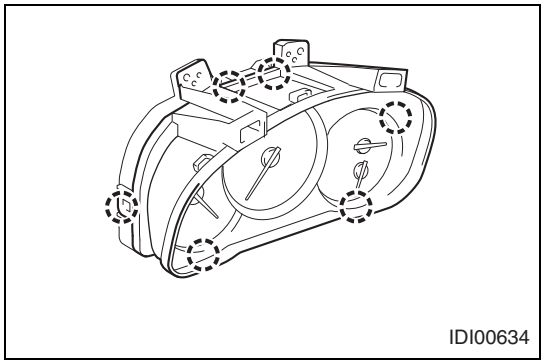
IDI00634

2. Removal of the combination meter cover
   (1) Release six claws and remove the combination meter cover.
   CAUTION:
   When removing the combination meter cover, do not touch the pointers.

Assembly

NOTE:
The procedures described below are for the normal meter. Operate the TFT meter performing the same procedures as the normal meter.

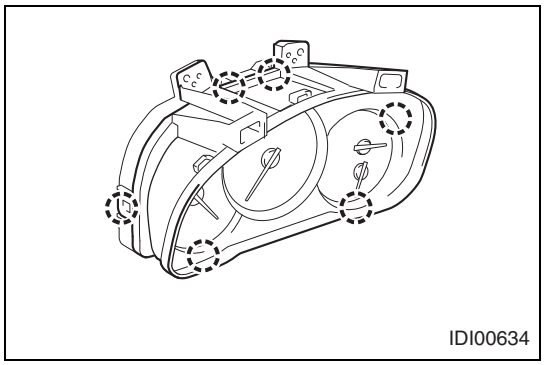
IDI00634

1. Installation of the combination meter cover
   (1) Engage six claws and install the combination meter cover.

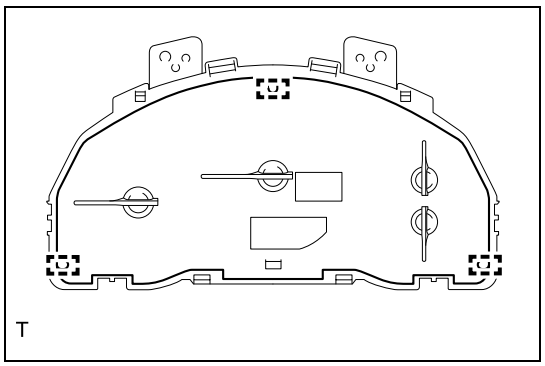
T

CAUTION:
When installing the combination meter cover, make sure that each dial is secured to the positioners.

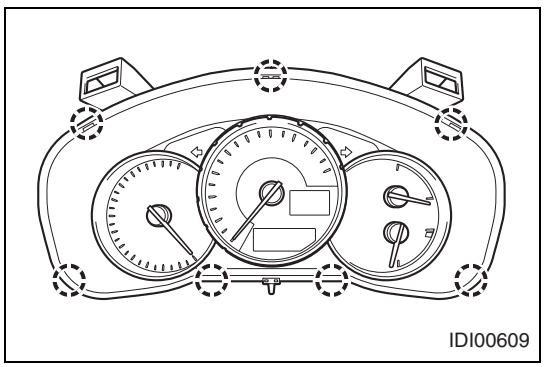
IDI00609

2. Installation of the combination meter glass
   (1) Engage seven claws and install the combination meter glass.

Installation

NOTE:
The procedures described below are for the normal meter. Operate the TFT meter performing the same procedures as the normal meter.

1. Installation of the combination meter ASSY
   (1) Connect the connector.
   (2) Engage two clips and install the combination meter ASSY.
   (3) Install the 2 screws.
2. Installation of the instrument panel meter ornament UPR (Refer to IT - 29)
3. Installation of the meter hood SUB-ASSY (Refer to IT - 29)
4. Installation of instrument cluster finish panel SUB-ASSY CTR (Refer to IT - 29)
5. Installation of the instrument panel ornament (Refer to IT - 29)
6. Connection of the battery ground terminal
   Standard value:T=6.0N·m {61kgf·cm} {4.4ft·lbf}
7. Settings when removing/installing battery terminals (Refer to IN - 10)

Clock ASSY

Exploded view

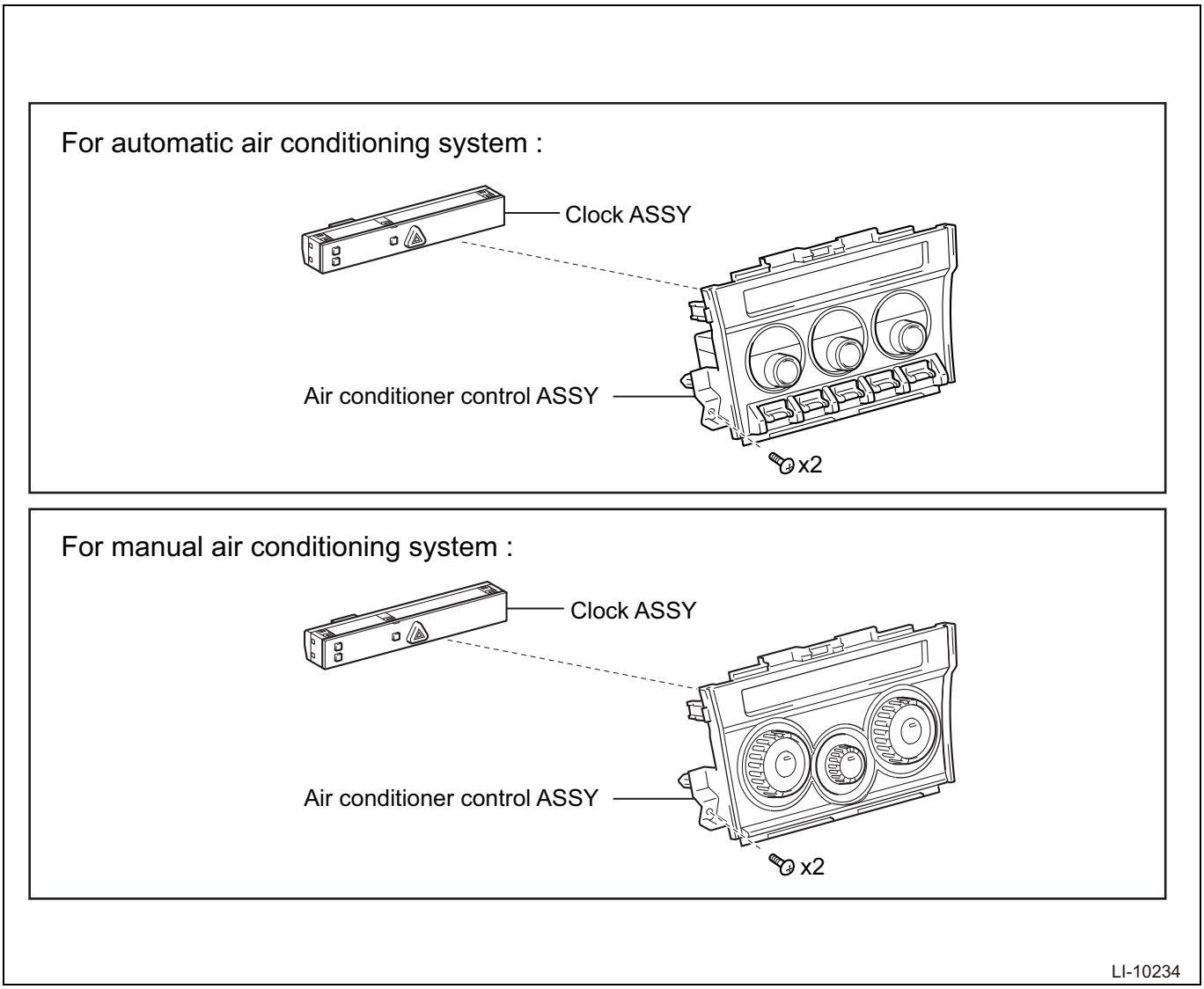

Removal

1. Removal of the air conditioner control ASSY (for automatic air conditioning system) (Refer to AC - 170)
2. Removal of the air conditioner control ASSY (for manual air conditioning system) (Refer to AC - 174)

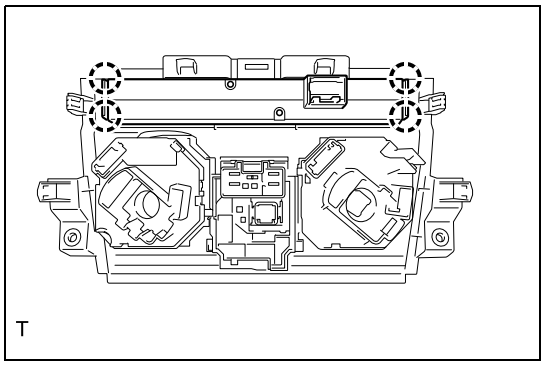

3. Removal of the clock ASSY
   (1) Release the 4 tabs, and remove the clock ASSY.

Installation

1. Installation of the clock ASSY
   (1) Fit in the 4 tabs and install the clock ASSY.

2. Installation of the air conditioner control ASSY (for automatic air conditioning system) (Refer to AC - 171)
3. Installation of the air conditioner control ASSY (for manual air conditioning system) (Refer to AC - 178)

Light control rheostat

Exploded view

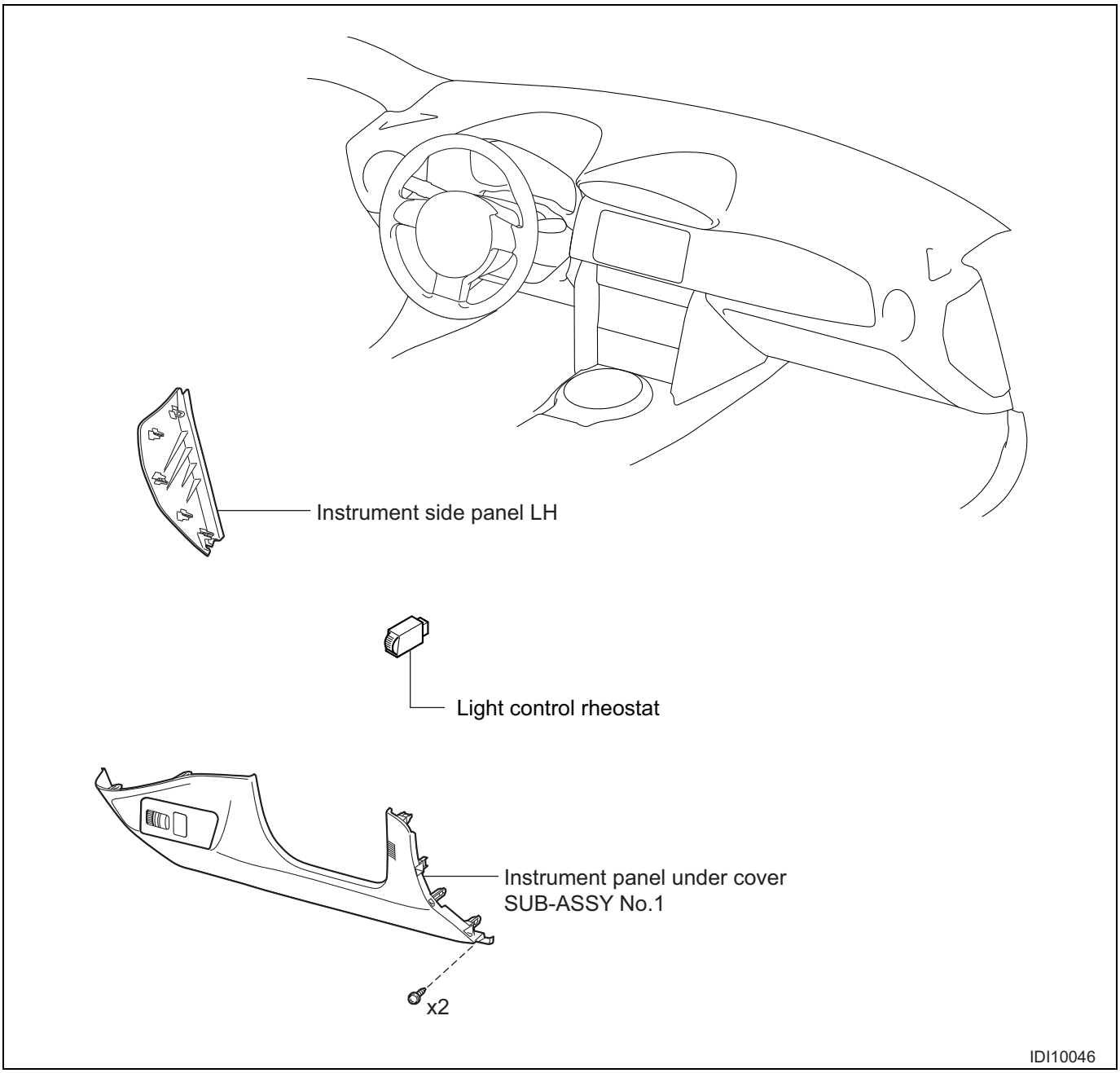

Removal

1. Removal of the instrument side panel LH (Refer to IT - 24)

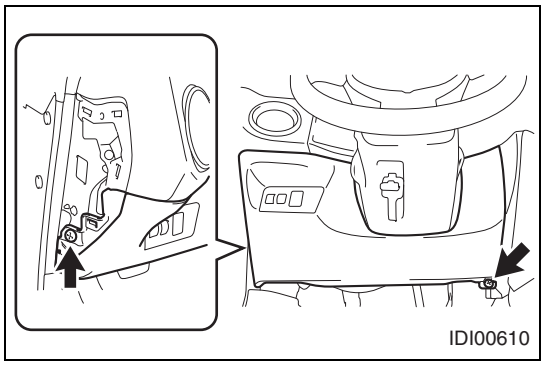

2. Removal of the instrument panel under cover SUB-ASSY NO.1
   (1) Remove the 2 screws.

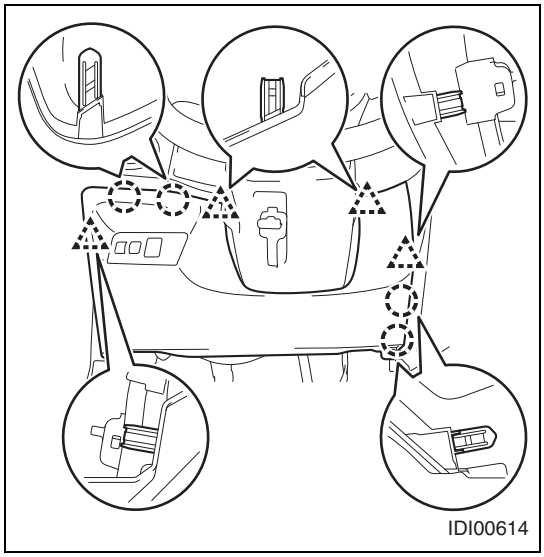

(2) Release four claws and four clips, and disconnect the instrument panel under cover SUB-ASSY NO.1.
(3) Disconnect the connectors, and remove the instrument panel under cover SUB-ASSY NO.1.

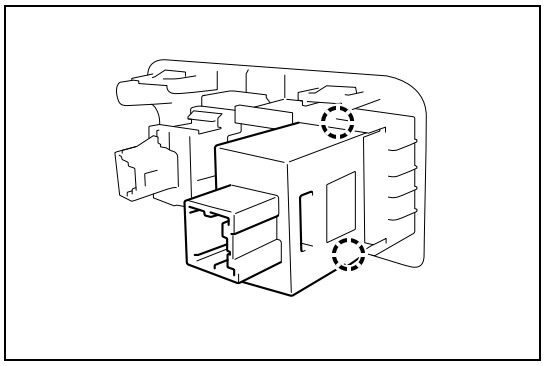

3. Removal of the light control rheostat
   (1) Release two claws and remove the light control rheostat.

ME

Installation

1. Installation of the light control rheostat
   (1) Engage two claws and install the light control rheostat.
2. Installation of the instrument panel under cover SUB-ASSY NO.1
   (1) Connect the connector.
   (2) Engage four claws and four clips, and install the instrument panel under cover SUB-ASSY NO.1.
   (3) Install the 2 screws.
3. Installation of the instrument side panel LH (Refer to IT - 29)

Trip switch

Exploded view

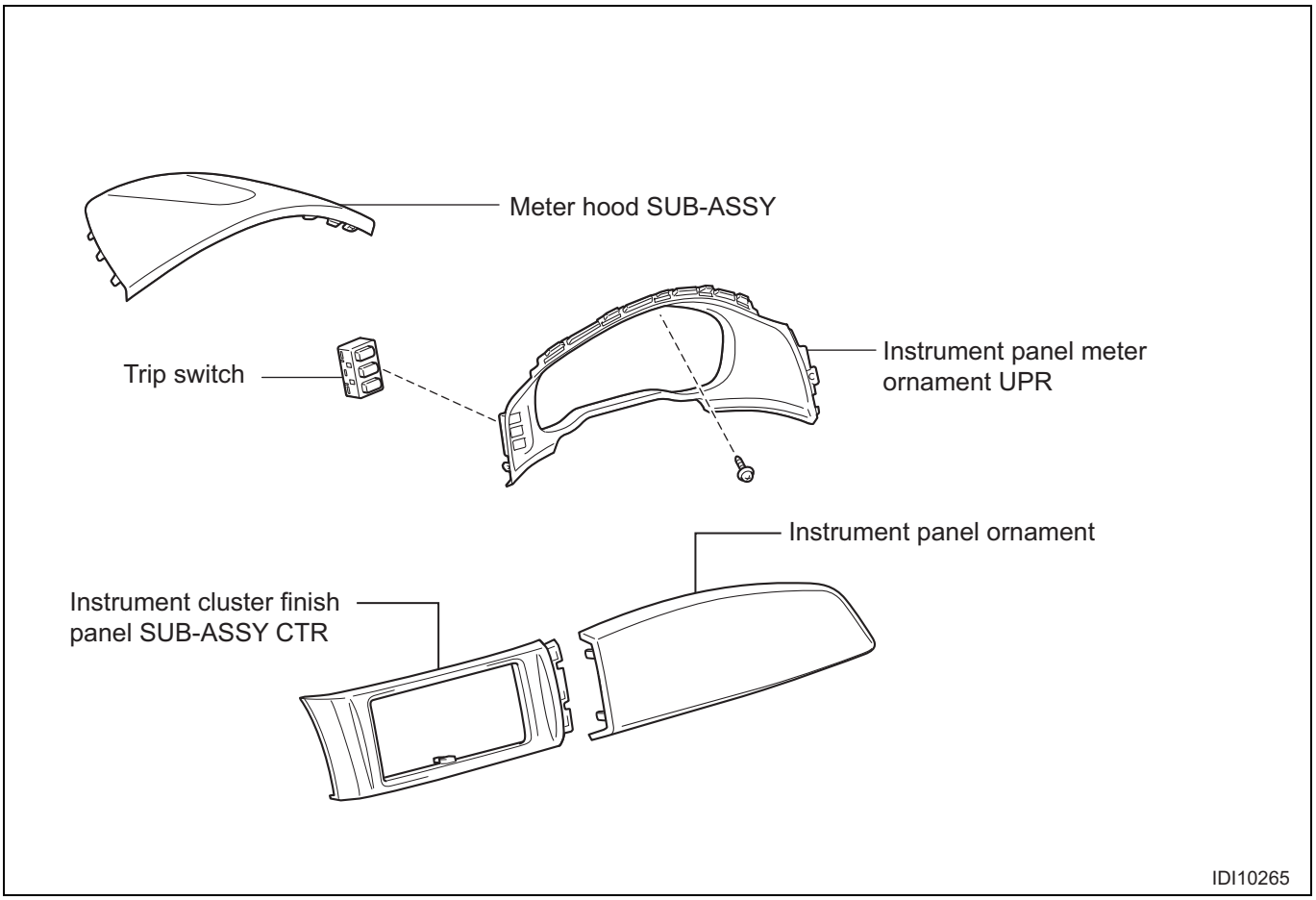

Removal

1. Removal of the instrument panel ornament (Refer to IT - 22)
2. Removal of instrument cluster finish panel SUB-ASSY CTR (Refer to IT - 23)
3. Removal of the meter hood SUB-ASSY (Refer to IT - 24)
4. Removal of the instrument panel meter ornament UPR (Refer to IT - 24)

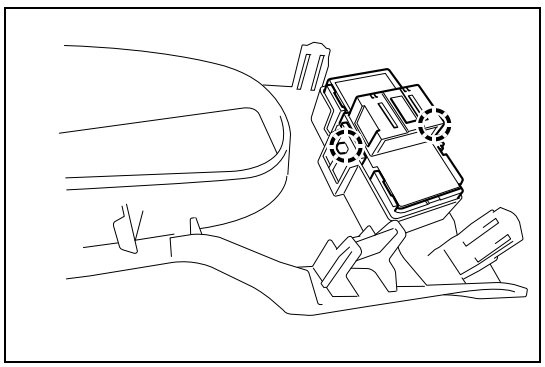

5. Removal of the trip switch
   (1) Release two claws and remove the trip switch.

Installation

1. Installation of the trip switch
   (1) Engage two claws and install the trip switch.
2. Installation of the instrument panel meter ornament UPR (Refer to IT - 29)
3. Installation of the meter hood SUB-ASSY (Refer to IT - 29)
4. Installation of instrument cluster finish panel SUB-ASSY CTR (Refer to IT - 29)

5. Installation of the instrument panel ornament (Refer to IT - 29)

Unit inspection

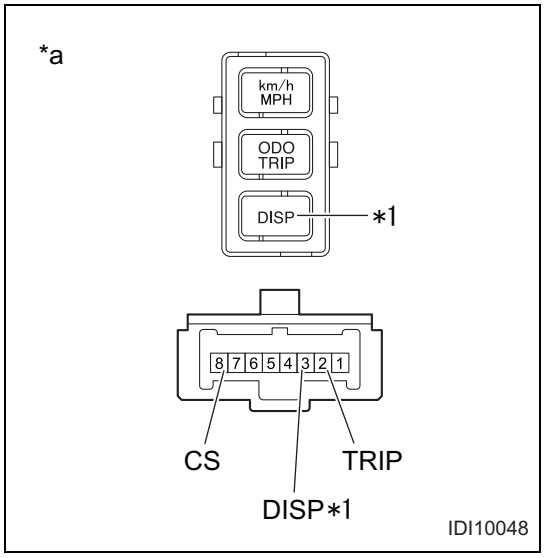

1. Trip switch inspection
   (1) Measure the resistance between the terminals.
   Resistance

Inspection terminals (Terminal symbol)	Inspection conditions	Standard value
2(TRIP) - 1	Trip switch OFF →ON	10 kΩ or more →less than 1 Ω
3(DISP) - 1*1	Display switch OFF →ON	10 kΩ or more →less than 1 Ω
8(CS) - 1	Speed display setting switch OFF→ON	10 kΩ or more →less than 1 Ω

Captions in illustration

*1	Normal meter only
*a	Connector not connected (Trip switch)

ME

Inner mirror

Inner rearview mirror
Exploded view MI-2
Removal. MI-2
Installation MI-3

Inner rearview mirror

Exploded view

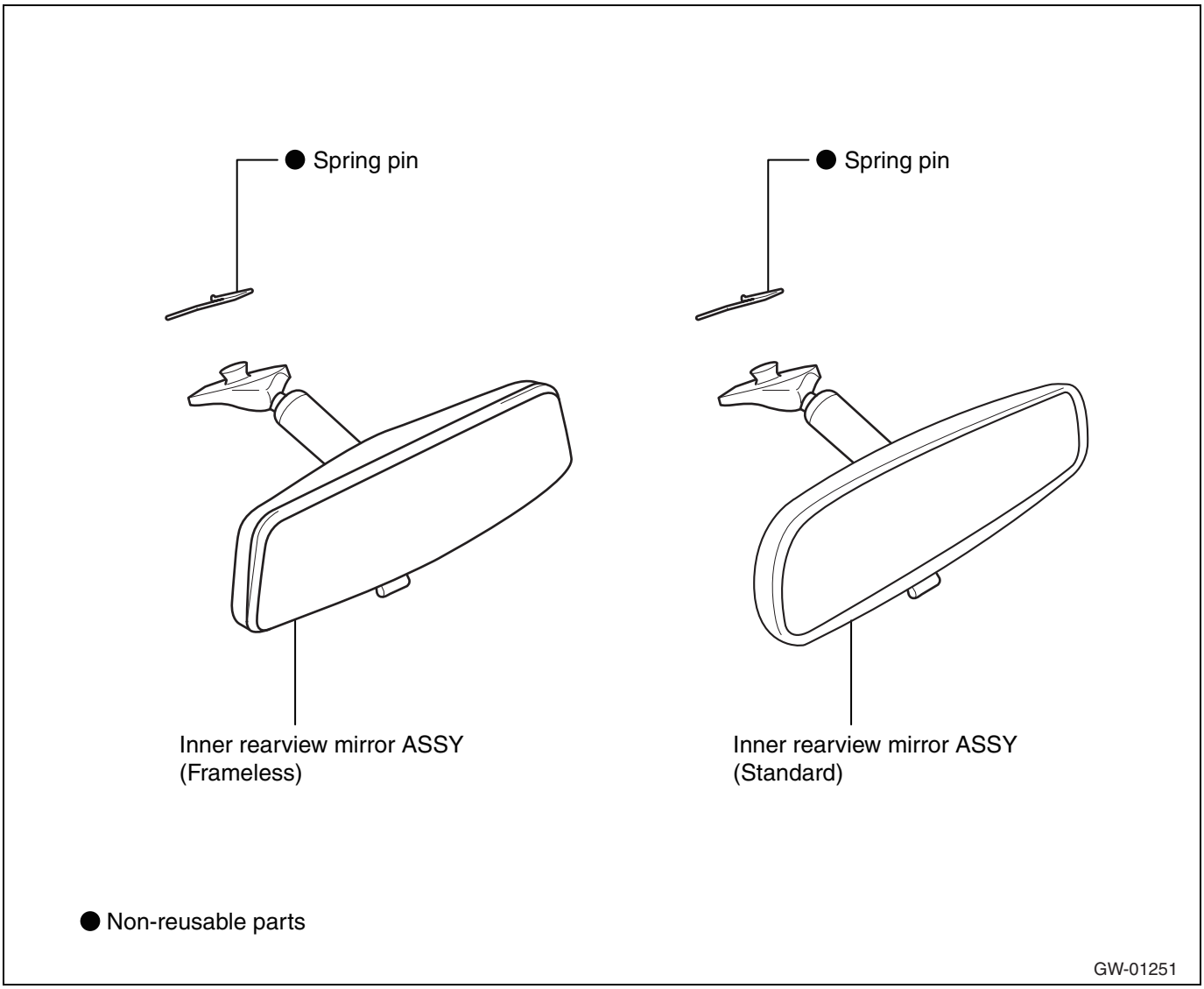

MI

Removal

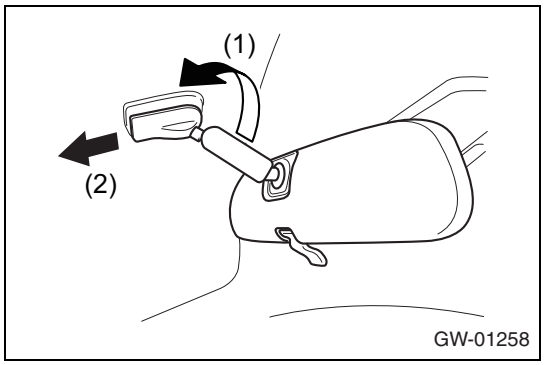

1. Removal of the inner rearview mirror ASSY
   (1) Rotate the inner rearview mirror ASSY by 90°.
   NOTE:
   It can be removed by rotating clockwise or counterclockwise.
   (2) Slide the inner rearview mirror ASSY to the front side of the vehicle, and remove it.

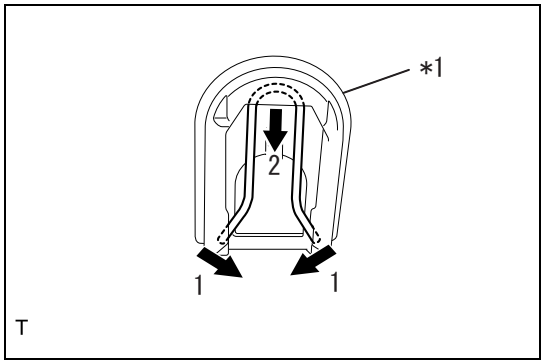

2. Removal of the spring pin
   (1) Remove the spring pin from the mirror base by following the order shown in the figure.

Captions in illustration

*1	Mirror base

Installation

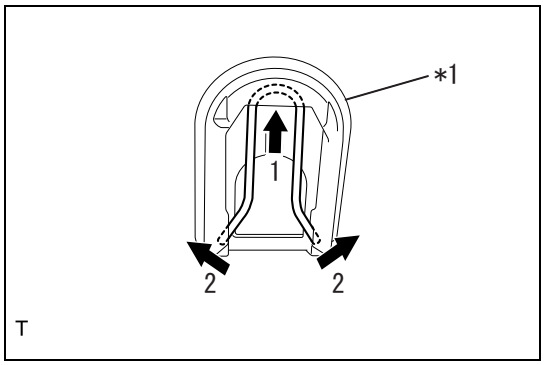

1. Installation of the spring pin
   (1) Install a new spring pin to the mirror base by following the order shown in the figure.

Captions in illustration

*1	Mirror base

2. Installation of the inner rearview mirror ASSY
   (1) Rotate the inner rearview mirror ASSY by 90°, and slide it to the spring pin from the front side of the vehicle.

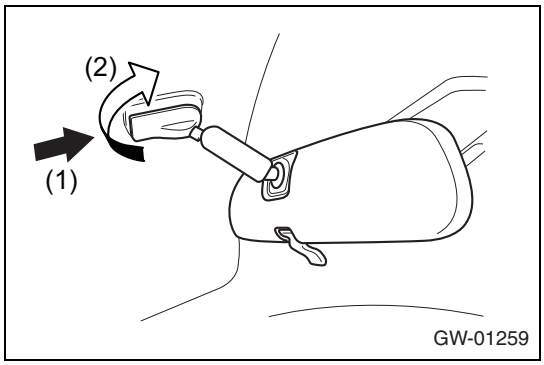

   (2) Rotate the inner rearview mirror ASSY by 90° clockwise or counterclockwise to install it.
   NOTE:
   It can be installed by rotating clockwise or counterclockwise.

MI

SRS airbag

SRS airbag system

Precautions RS-5
Inspection. RS-13
Preparation tool RS-14
Parts location RS-23
Airbag connector RS-24
Inspection items after a collision RS-34
Data monitor RS-38
Event record data display RS-39
List of diagnostic codes RS-40
How to troubleshoot. RS-44
Subaru select monitor RS-46
Communication for initializing is not possible RS-46
Check list for interview. RS-50
Checking / clearing diagnostic codes. RS-51
ECM terminal arrangement RS-51
Wiring diagram. RS-52
Airbag warning light illumination pattern RS-53
Airbag warning light remains ON. RS-53
Airbag warning light remains OFF RS-53
U0073 . . . . . RS-54
B1000. . . . . RS-54
B11E0 . . . . . RS-54
B11F0 . . . . . RS-55
B11F1 . . . . . RS-55
B11F6 . . . . . RS-56
B1610. . . . . RS-56
B1612. . . . . RS-56
B1613. . . . . RS-56
B1615. . . . . RS-59
B1617. . . . . RS-59
B1618. . . . . RS-59
B161A RS-62
B16F1 . . . . . RS-65
B16F2 . . . . . RS-67
B16F3 . . . . . RS-68
B1620. . . . . RS-68
B1622. . . . . RS-69
B1623. . . . . RS-69
B1625. . . . . RS-72
B1627. . . . . RS-72
B1628. . . . . RS-72
B1630. . . . . RS-76
B1632. . . . . RS-76
B1633. . . . . RS-76
B1635. . . . . RS-80
B1637. . . . . RS-80
B1638. . . . . RS-80
B16F4 . . . . . RS-84

B16F5 . . . . . RS-84
B16F6 . . . . . RS-85
B16F7 . . . . . RS-85
B1642 . . . . . RS-86
B1647 . . . . . RS-93
B1660 . . . . . RS-100
B1675 . . . . . RS-104
B1678 . . . . . RS-105
B1679 . . . . . RS-105
B16F8 . . . . . RS-108
B16F9 . . . . . RS-108
B1690 . . . . . RS-109
B1692 . . . . . RS-109
B1693 . . . . . RS-109
B16FA RS-113
B1695 . . . . . RS-114
B1697 . . . . . RS-114
B1698 . . . . . RS-114
B1800 . . . . . RS-119
B1801 . . . . . RS-121
B1802 . . . . . RS-124
B1803 . . . . . RS-127
B1805 . . . . . RS-130
B1806 . . . . . RS-133
B1807 . . . . . RS-136
B1808 . . . . . RS-138
B1810 . . . . . RS-141
B1811 . . . . . RS-144
B1812 . . . . . RS-147
B1813 . . . . . RS-150
B1815 . . . . . RS-153
B1816 . . . . . RS-156
B1817 . . . . . RS-159
B1818 . . . . . RS-162
B1820 . . . . . RS-165
B1821 . . . . . RS-168
B1822 . . . . . RS-171
B1823 . . . . . RS-174
B1825 . . . . . RS-177
B1826 . . . . . RS-180
B1827 . . . . . RS-183
B1828 . . . . . RS-186
B1830 . . . . . RS-189
B1831 . . . . . RS-192
B1832 . . . . . RS-194
B1833 . . . . . RS-196
B1835 . . . . . RS-199
B1836 . . . . . RS-201
B1837 . . . . . RS-203
B1838 . . . . . RS-205
B1900 . . . . . RS-208
B1901 . . . . . RS-210
B1902 . . . . . RS-212
B1903 . . . . . RS-215
B1905 . . . . . RS-217

B1906. . . . . RS-219
B1907. . . . . RS-222
B1908. . . . . RS-224

Occupant detection system
Precautions RS-227
Inspection. RS-227
Preparation tool RS-227
Parts location RS-229
Airbag connector RS-230
List of diagnostic codes RS-231
How to troubleshoot. RS-232
Subaru select monitor RS-233
Communication for initializing in airbag system is not working RS-233
Communication for initializing is not possible only in the occupant detection system RS-233
Check list for interview. RS-233
Checking / clearing diagnostic codes. RS-234
ECM terminal arrangement RS-234
Wiring diagram. RS-235
Data monitor RS-235
Airbag warning light illumination pattern RS-236
Illumination pattern for passenger's airbag ON / OFF indicator light RS-237
B1650. . . . . RS-238
B1655. . . . . RS-240
B1760. . . . . RS-241
B1761. . . . . RS-242
B1771. . . . . RS-243
B1795. . . . . RS-244

Driver side air bag module
Exploded view RS-246
Removal. RS-246
Installation RS-248

Steering roll connector
Exploded view RS-250
Removal. RS-250
Inspection. RS-252
Installation RS-252
Unit inspection RS-254

Passenger's airbag module
Exploded view RS-255
Removal. RS-255
Installation RS-256

Curtain airbag module
Exploded view RS-257
Removal. RS-257
Installation RS-258

Side airbag module
Exploded view RS-260
Removal. RS-261
Installation RS-261

Front sub sensor
Exploded view RS-263
Removal RS-263
Installation RS-264

Front door impact sensor
Exploded view RS-266
Removal RS-266
Installation RS-267

Side airbag sensor
Exploded view RS-269
Removal RS-269
Installation RS-271

Curtain airbag sensor
Exploded view RS-274
Removal RS-274
Installation RS-275

Satellite safing sensor
Exploded view RS-278
Removal RS-278
Installation RS-279

Airbag control module
Exploded view RS-281
Removal RS-281
Installation RS-282

Passenger's airbag ON / OFF indicator light
Exploded view RS-284
Removal RS-284
Installation RS-284
Unit inspection RS-285

SRS airbag system

Precautions

1. Before starting all works
   (1) The airbag system is fitted with a backup power supply. After disconnecting the battery ground terminal, the airbag may operate if you do not wait for 60 seconds or more before starting the service of airbag system.

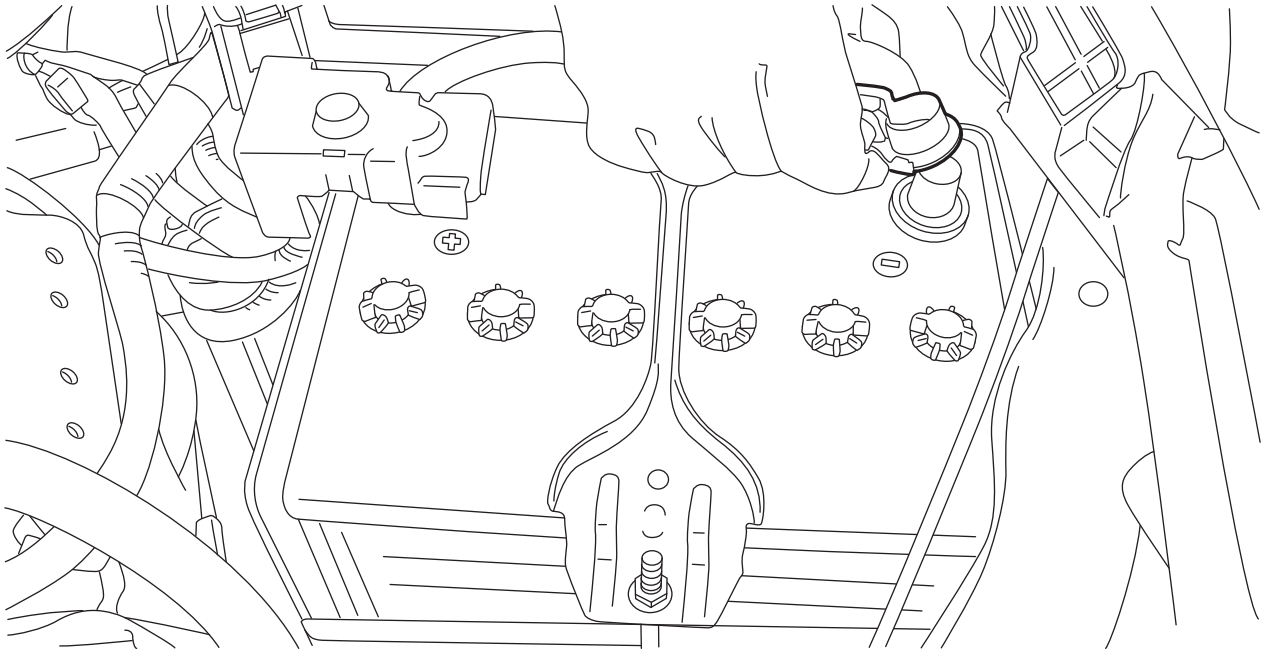
AB-03100

   (2) When servicing a vehicle, be sure to turn the ignition switch to OFF, disconnect the ground terminal from battery, and wait for 60 seconds or more before starting work.
   (3) If the airbag warning light illuminates, check or repair the vehicle immediately to prevent it from airbag system malfunction.
   (4) Do not let water or oil adhere to the connector terminals. Also, do not touch the connector terminals directly.

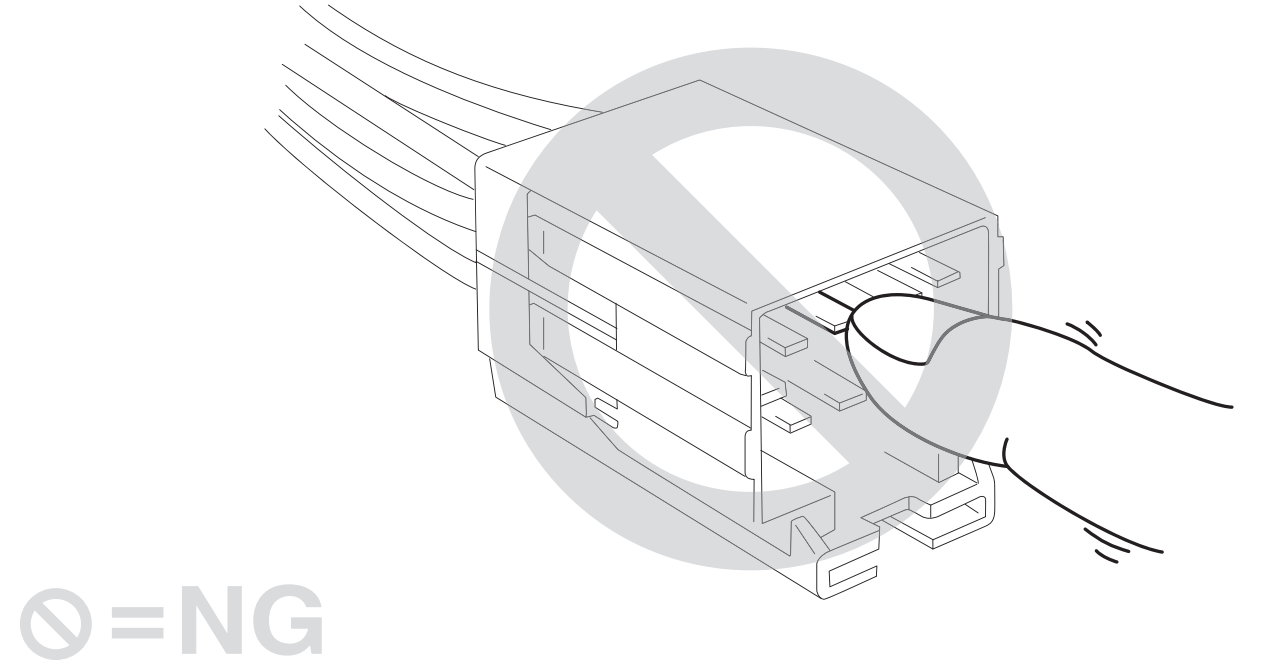

AB-03101

(5) If damage, open circuit or rust is found on airbag system wiring harness, do not repair the harness. Always replace the faulty harness with a new genuine part.

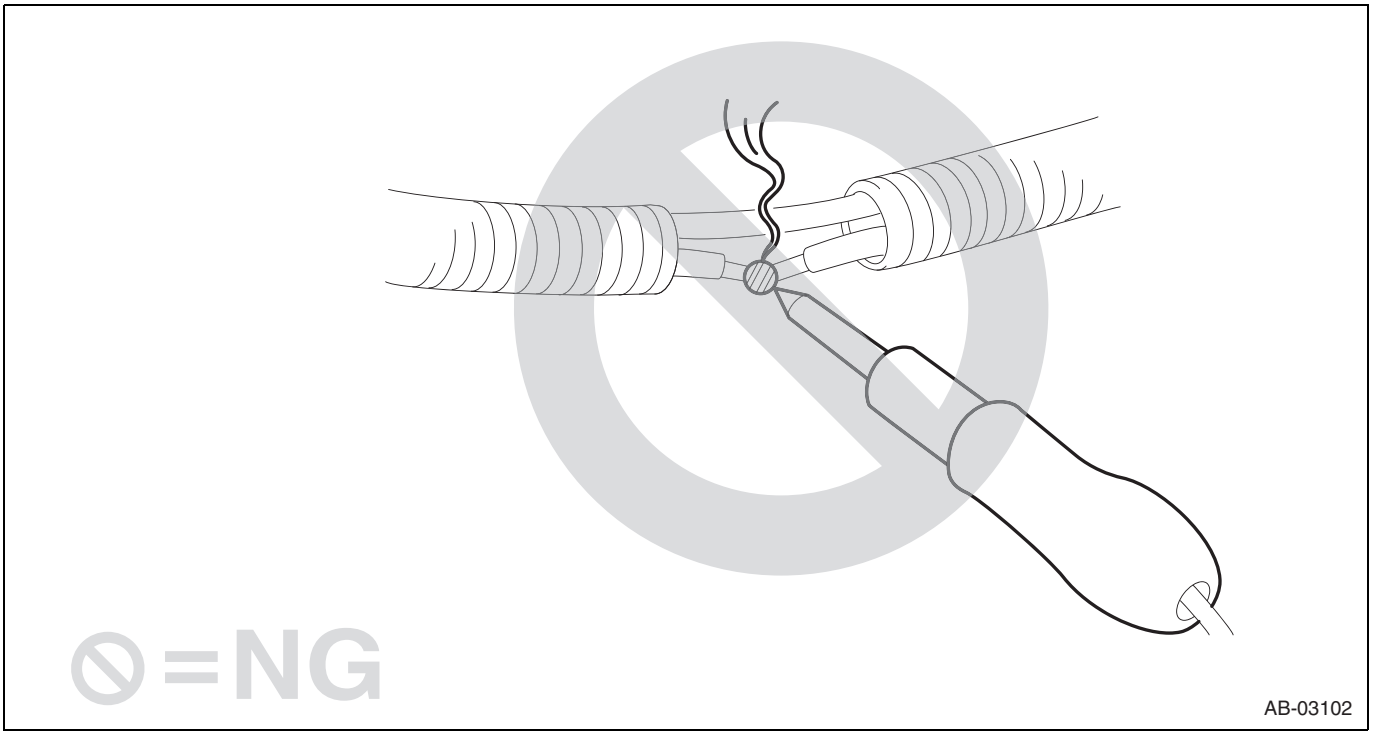

(6) When painting or performing sheet metal work on the front part of the vehicle, including the front wheel apron, front fender and radiator panel side, remove the front sub sensors and wiring harness of airbag system.

RS

(7) When painting or performing sheet metal work on the side of the vehicle, including the side sill, center pillar and front and rear doors, remove the side airbag sensors, curtain airbag sensor, satellite safing sensor, front door impact sensor and wiring harness of the airbag system.

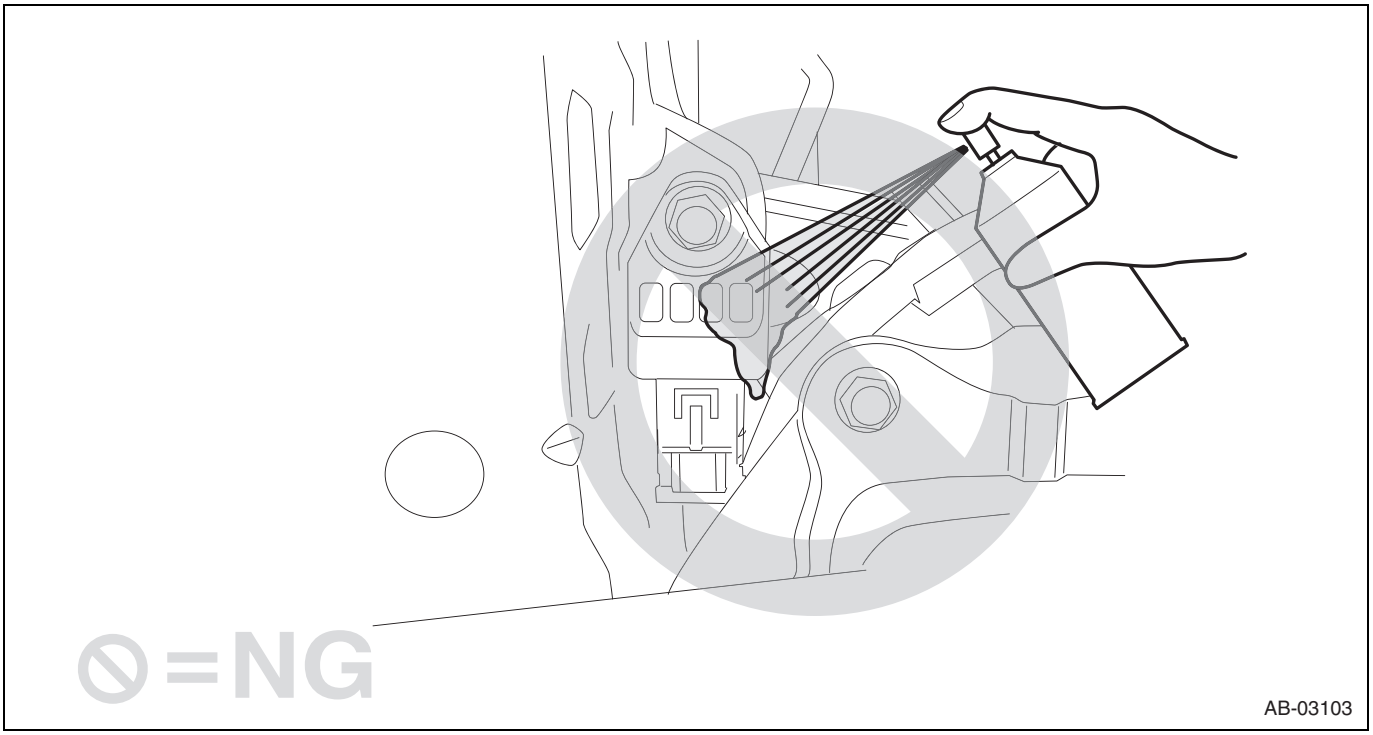

(8) When attaching the steering wheel and steering roll connector, be sure to adjust the steering roll connector.

2. Before starting parts replacement

(1) If airbag sensors, airbag module, airbag control module, pretensioners, harnesses, or the cover - if satellite safing is deformed or damaged, replace with new parts.

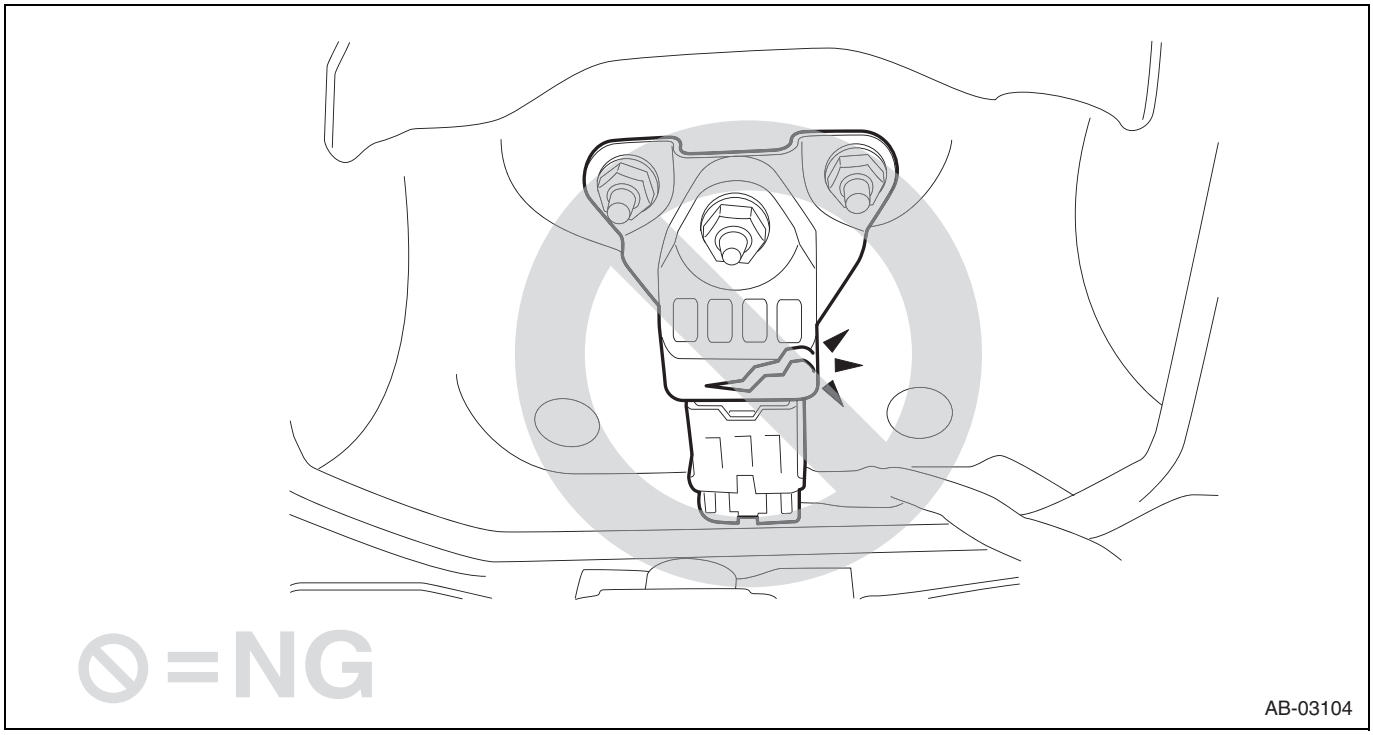

(2) Install the wiring harness securely with the specified clips to avoid interference or tangled with other parts.

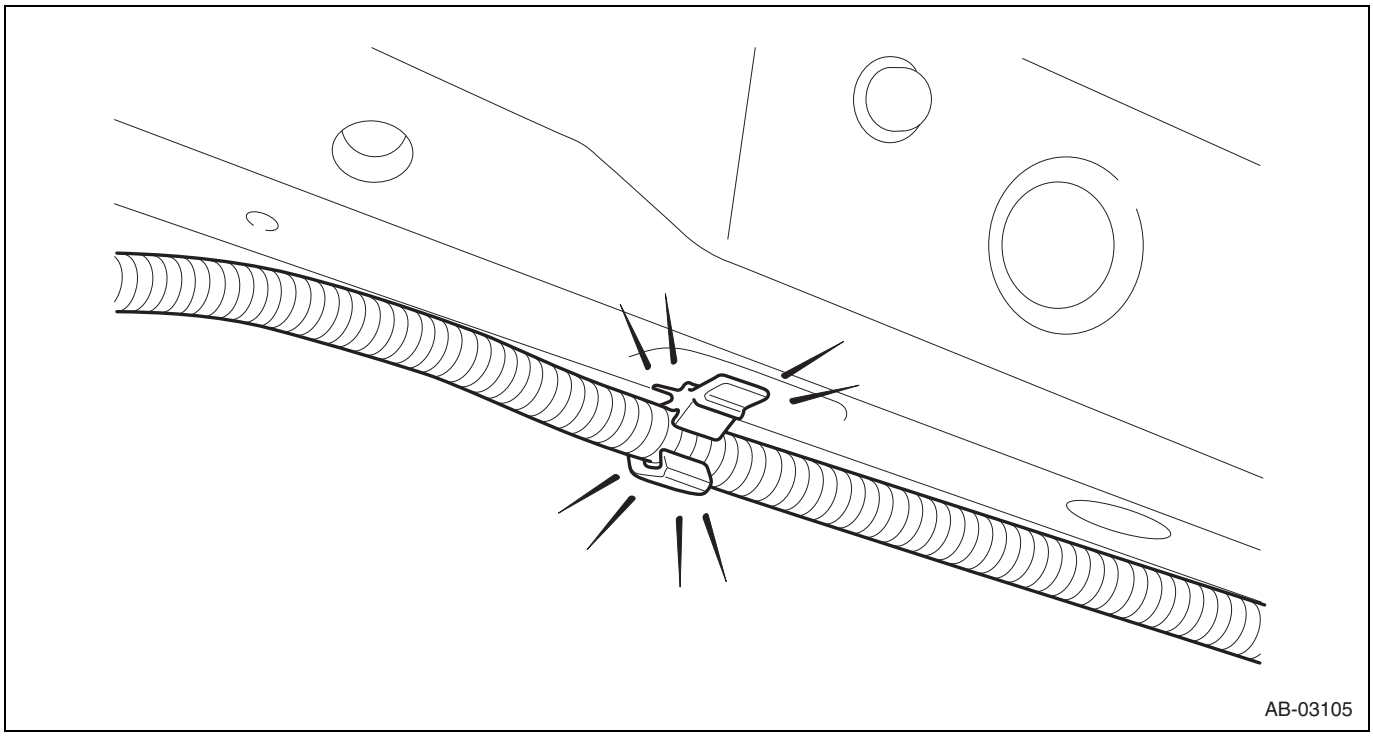

(3) Do not use the airbag or pretensioner parts from other vehicles. Always replace the defective parts with new parts.
(4) Never reuse any activated airbag module and pretensioner.
(5) Do not discard undeployed airbag or pretensioner.
(6) When airbag control module, front sub sensor, side airbag sensor, curtain airbag sensor, satellite safing sensor and front door impact sensor are removed, do not reuse the bolts and nuts of them. Always replace with the specified new bolt and nut.
(7) When attaching the steering wheel and steering roll connector, be sure to adjust the steering roll connector.
(8) After removing each parts of the airbag system, keep them with the pad side facing upward on a dry, clean and flat surface away from heat, light sources, moisture and dust.

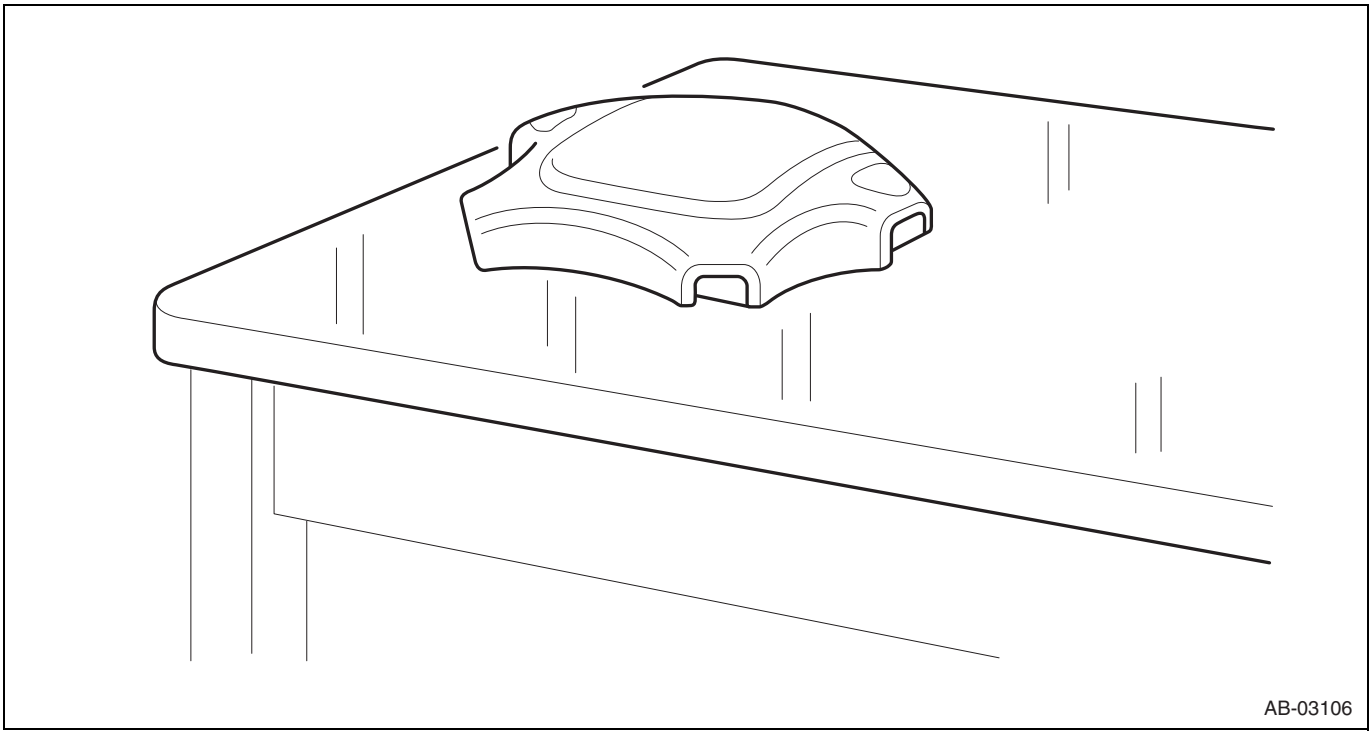

(9) Do not drop any airbag component, store them under high temperature of 85°C (185°F) or more, or let water, oil or grease get on them; the internal parts may be damaged or the reliability may be greatly lowered.

RS

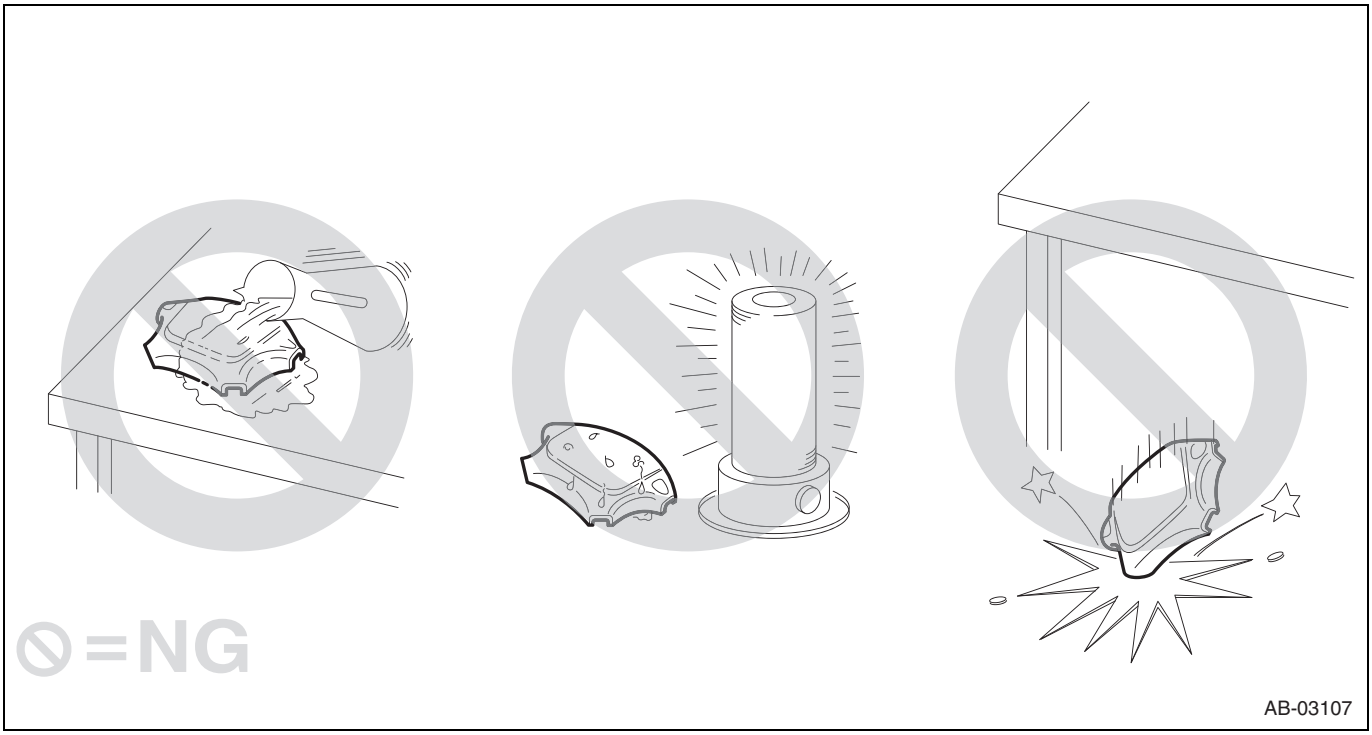

(10) When storing a removed airbag module, do not place it with the pad side facing downward. Do not place any objects on the airbag module. Do not pile up the airbag module. If the pad of the airbag module is in contact with other objects, it may cause a serious accident if the airbag accidentally operates.

(11) Driver side air bag module

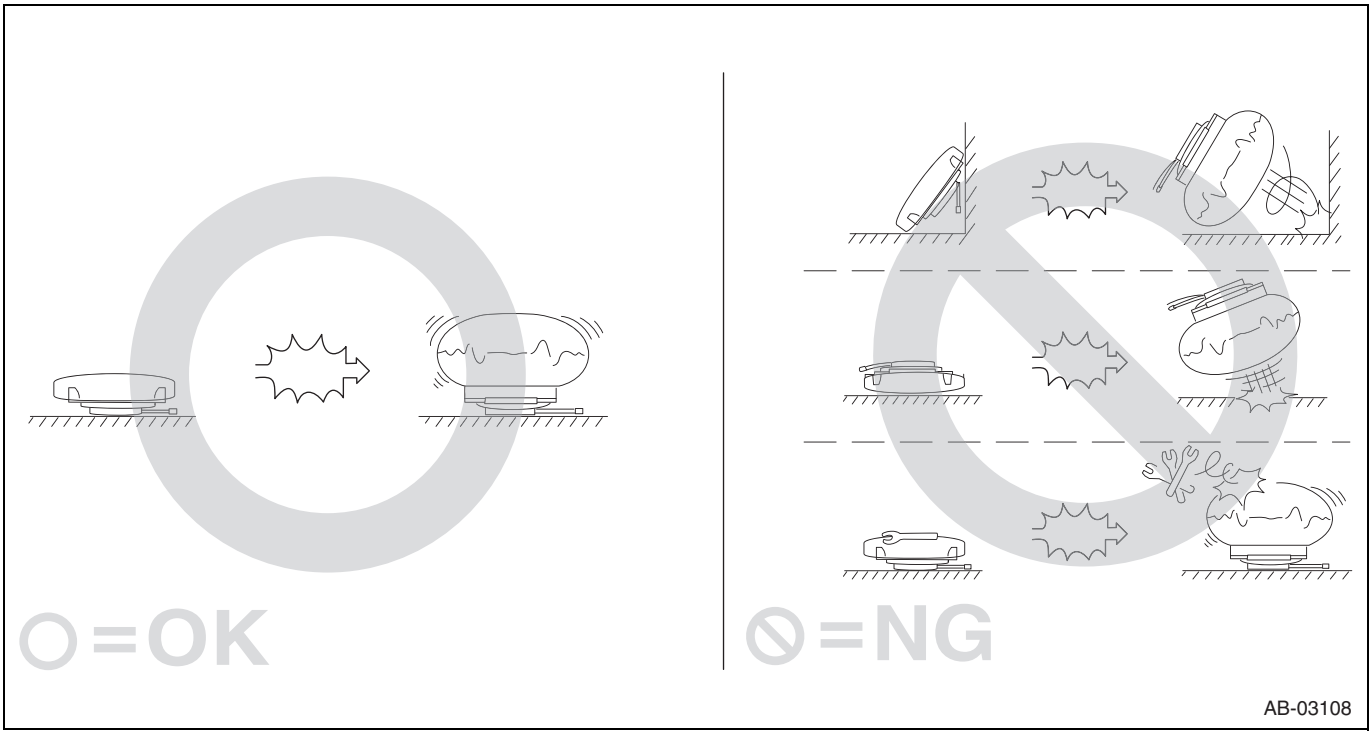

(12) Passenger's airbag module and side airbag module

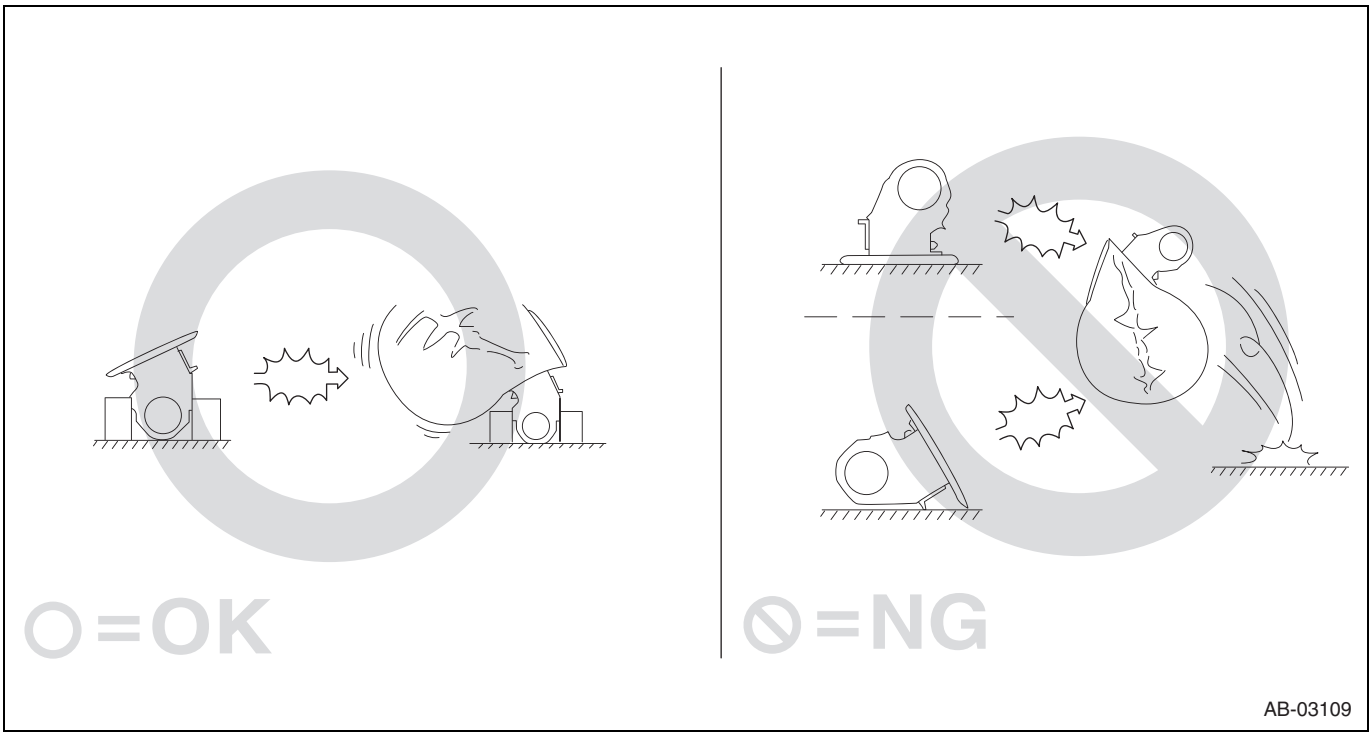

(13) Do not disassemble driver's airbag module, passenger's airbag module, side airbag module, curtain airbag module or pretensioner.



(14) The removed front seat with airbag module must be kept at least 200 mm (8 in) away from walls and other objects.

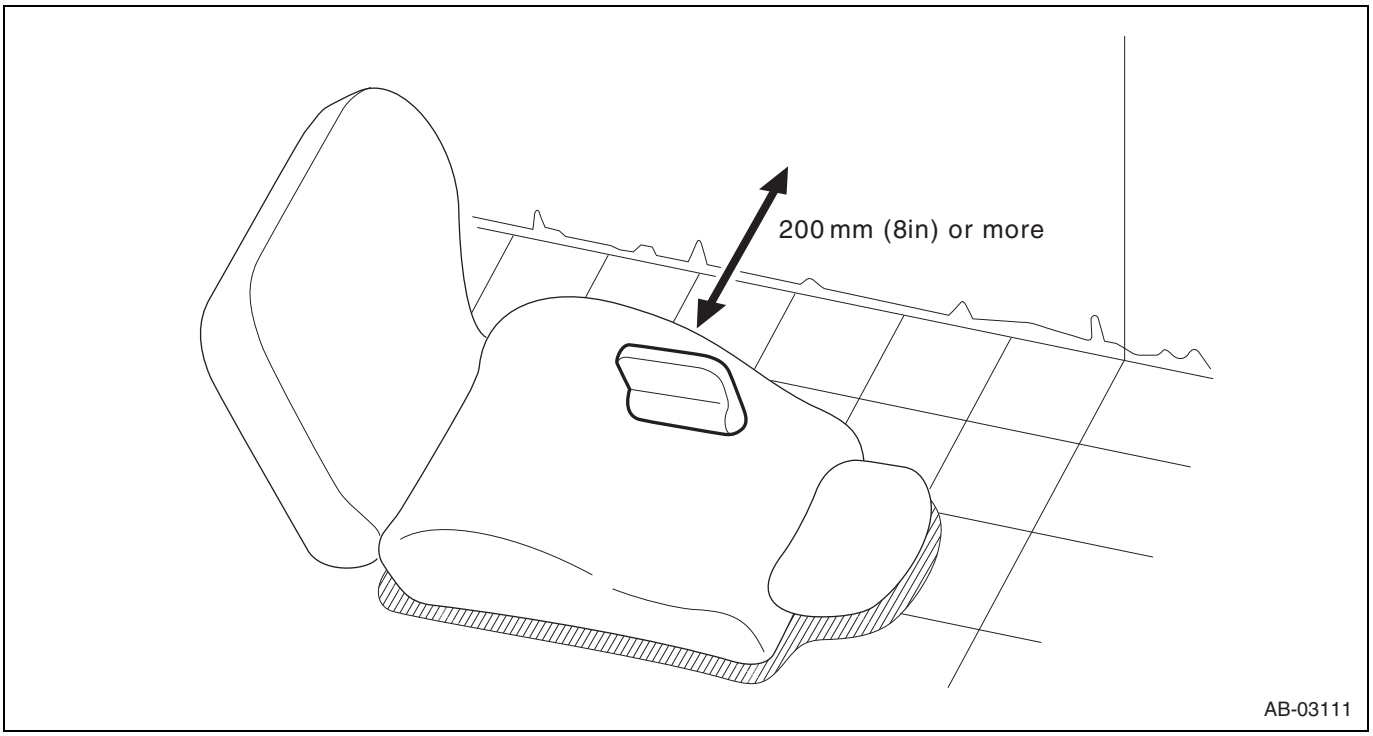

3. Before starting troubleshooting
   (1) Even if any part must be replaced as the result of troubleshooting, do not use an airbag part or pretensioner part from other vehicles. Always replace the defective parts with new parts.
   (2) When checking the airbag system, be sure to use a digital circuit tester. Use of an analog circuit tester may cause the airbag to activate erroneously due to a low current inside tester.

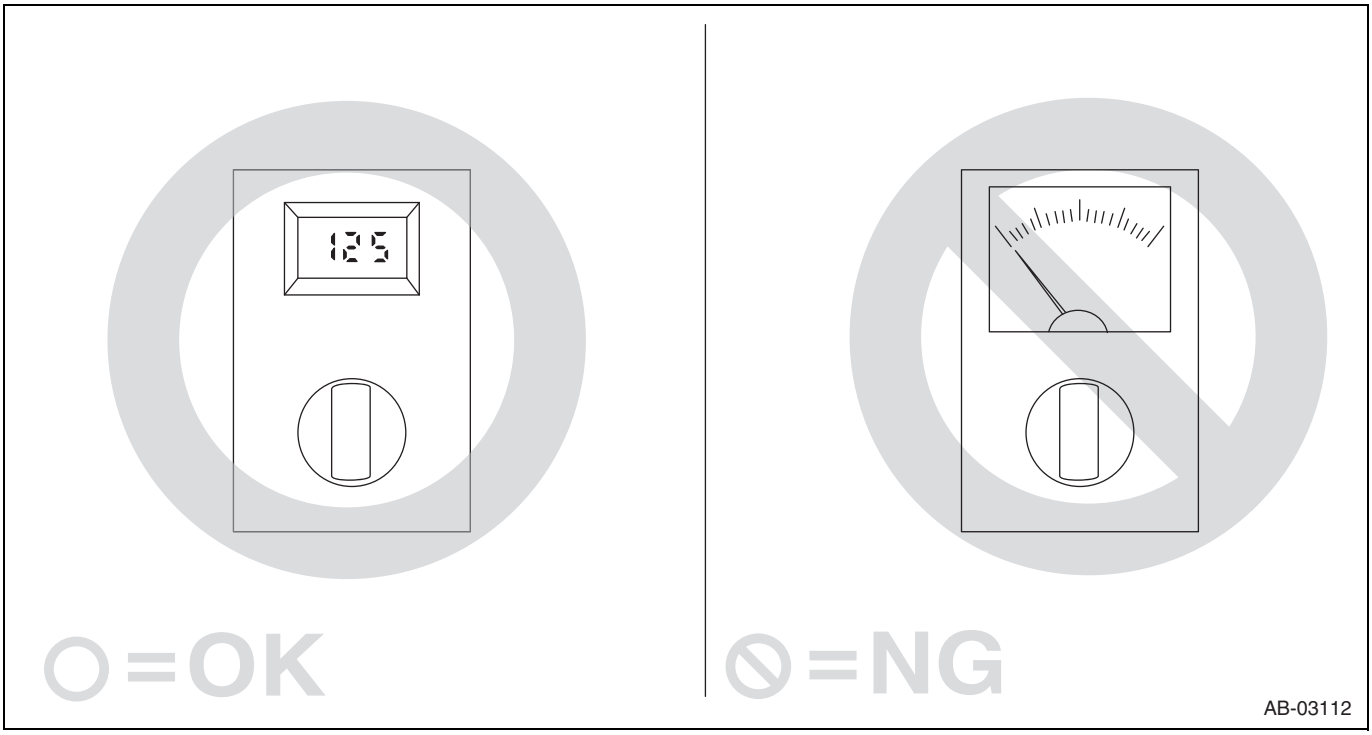

(3) Do not let water or oil adhere to the connector terminals. Also, do not touch the connector terminals directly.

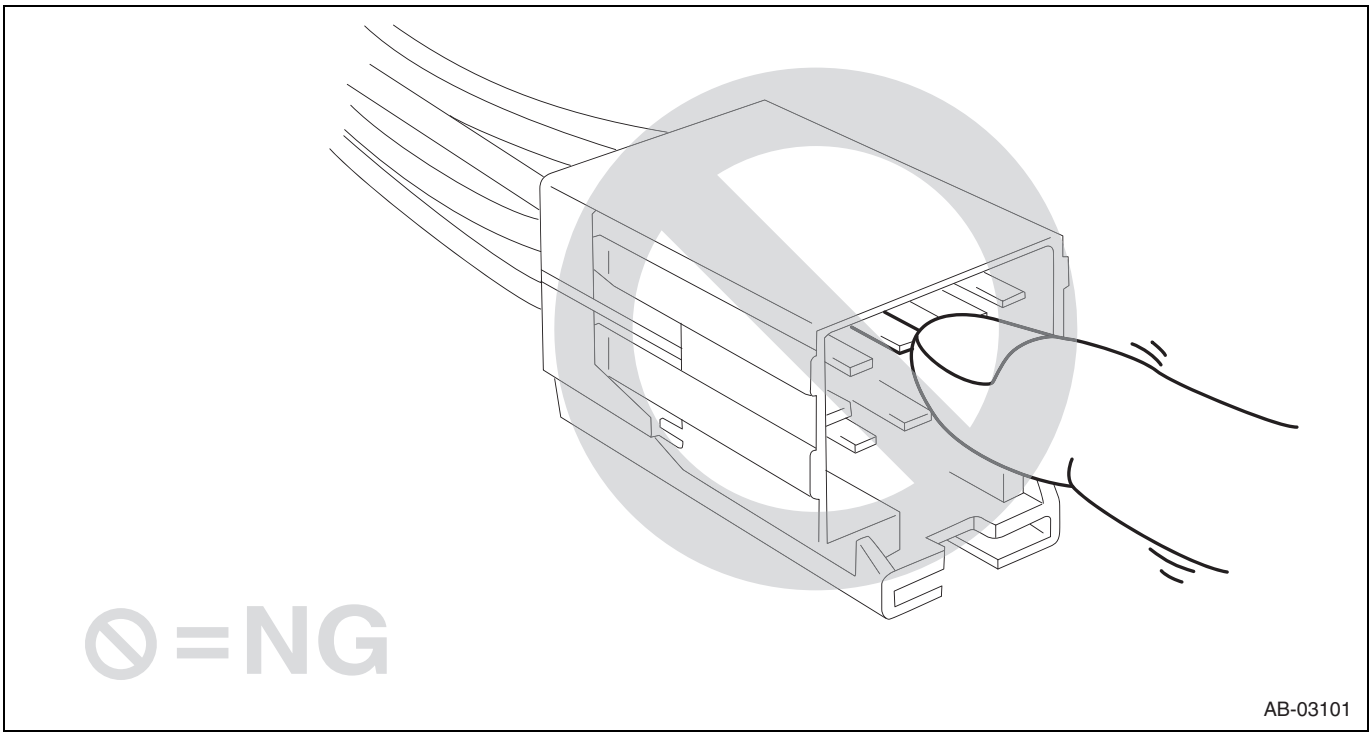

(4) When checking, use a test harness. Damage to connector terminal causes malfunction. Do not directly put the tester probe on airbag connector terminal.

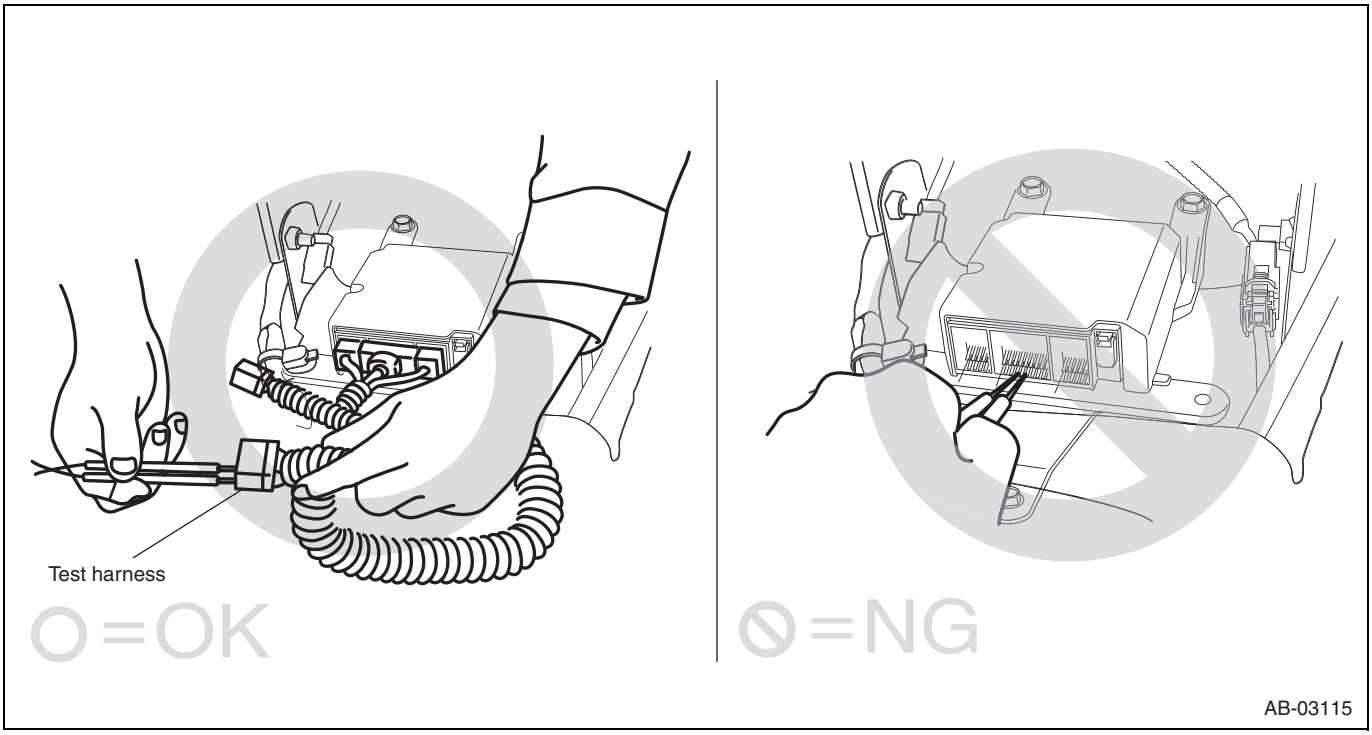

(5) Do not check continuity of the driver's airbag module, passenger's airbag module, side airbag module, curtain airbag module or pretensioner.

RS

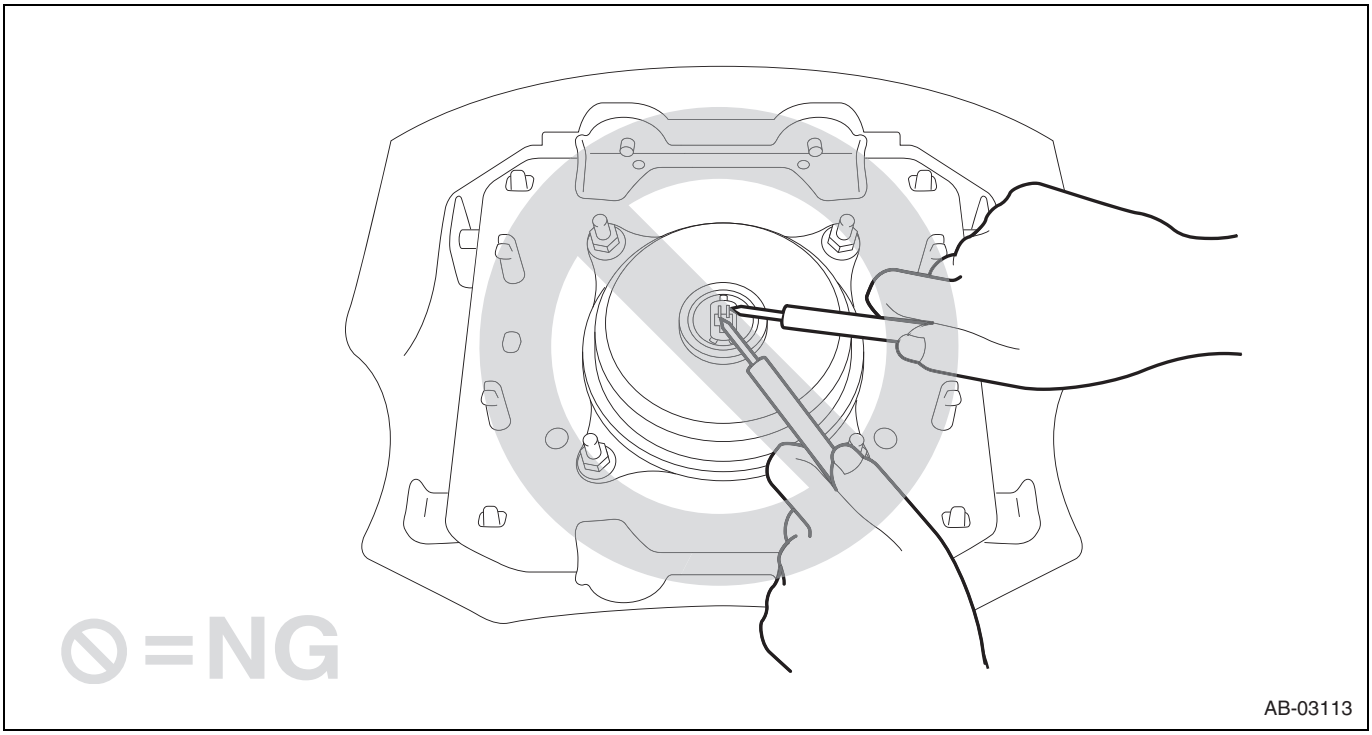

(6) If damage, open circuit or rust is found on airbag system wiring harness, do not repair the harness. Always replace the faulty harness with a new genuine part.

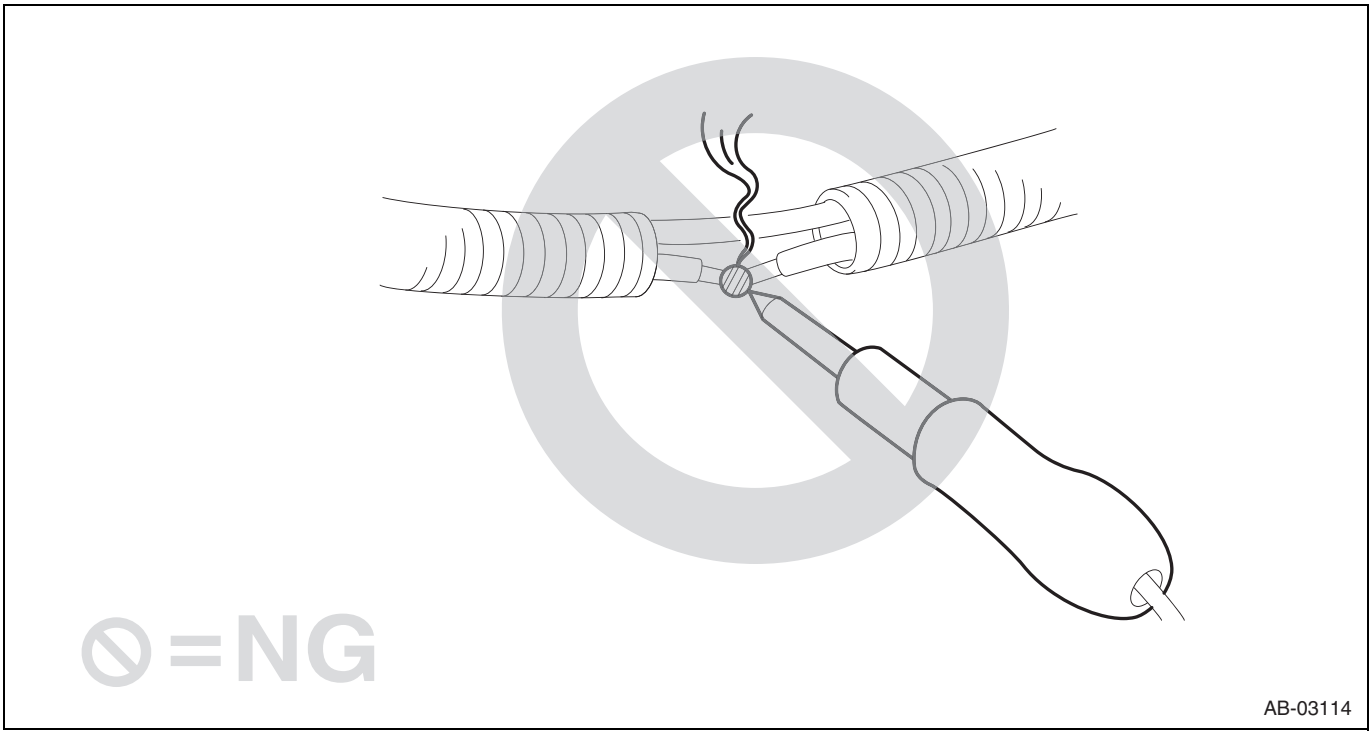

4. Checking with a probe
   (1) Insert the probe into the harness hole, and contact it with the terminal.

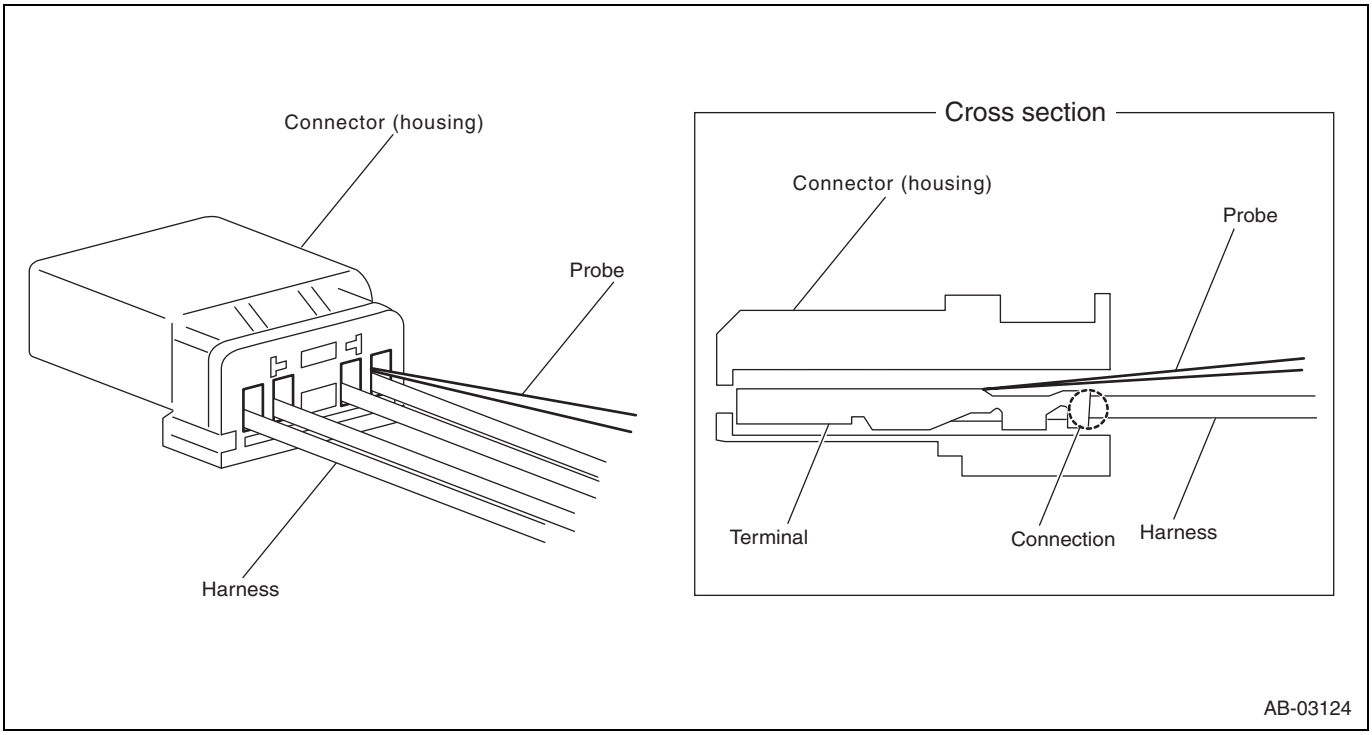

   (2) Do not insert the probe forcibly.
   (3) Be careful not to contact the part between the terminal and harness with the tip of probe. (It will make harness come off easily from connector.)

Inspection

1. Measure the battery voltage and check the battery fluid.
   Standard voltage: 12V
   Specific gravity: 1.260 or more

Preparation tool

CAUTION:
When measuring the voltage, resistance, etc. of the airbag system components, be sure to use the specified test harness.

1. Subaru Select Monitor

Shape	Tool number	Remarks
 STSSM4	—	Used for diagnosing electrical system failure.

2. Test harness H

Tool number	Remarks
98299FA030	Used when measuring voltage and resistance of front sub sensor and front door impact sensor.

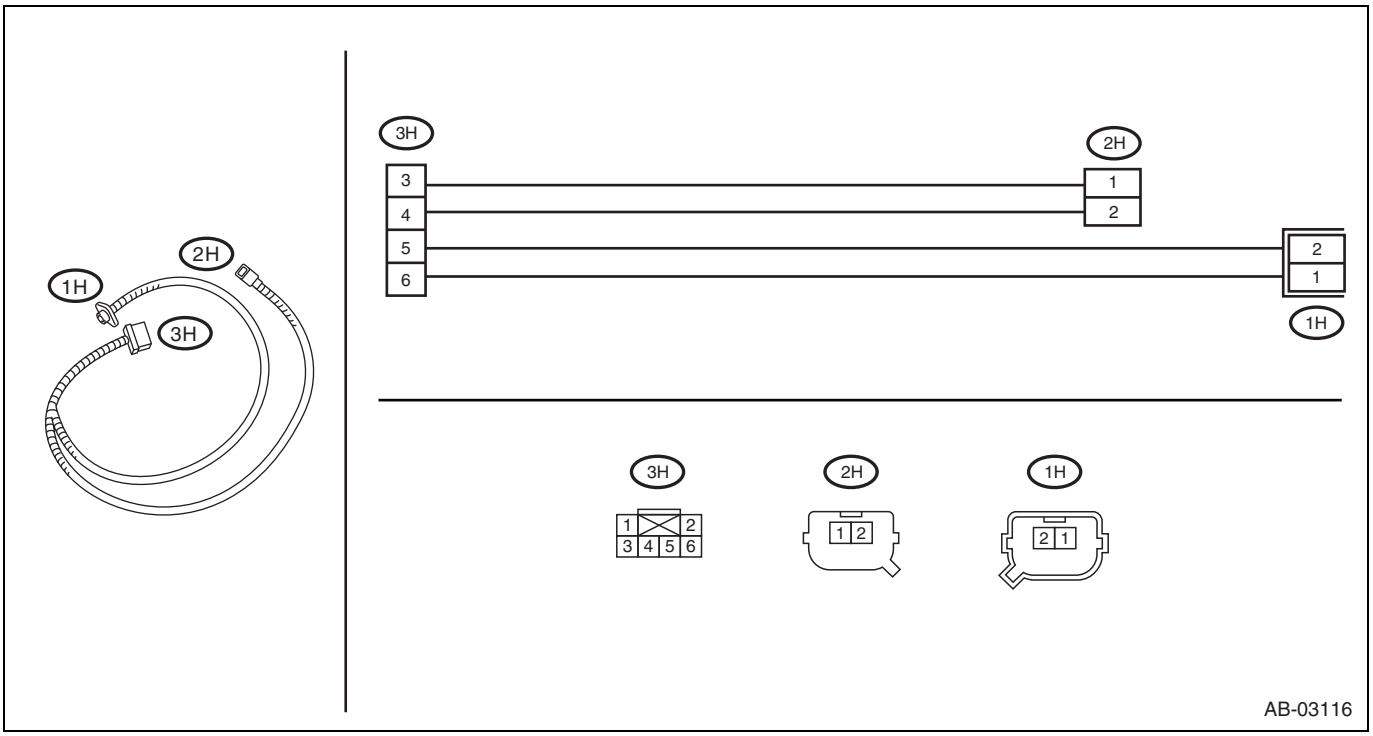

3. Test harness N

Tool number	Remarks
98299SA000	Used when measuring voltage and resistance of seat belt pretensioner and curtain airbag module.

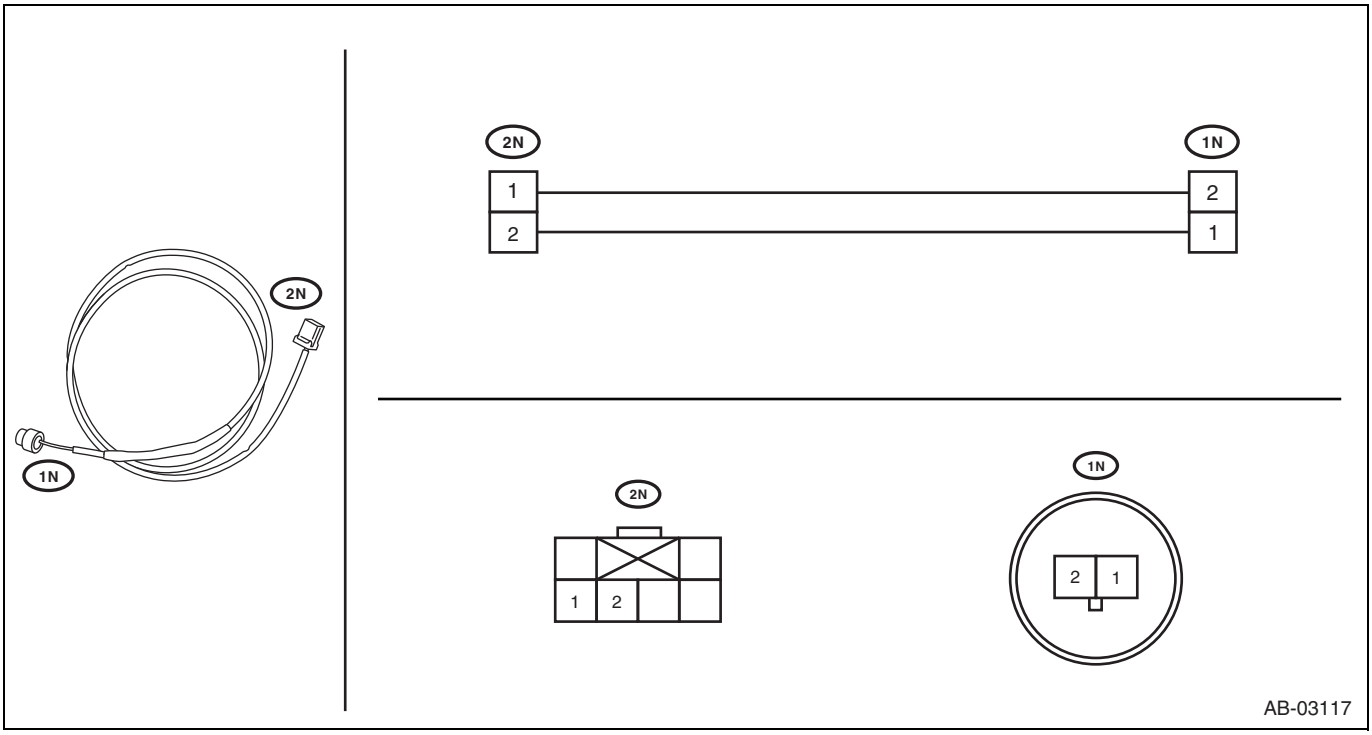

4. Test harness Q

Tool number	Remarks
98299SA040	Used when measuring voltage and resistance of driver's airbag module.

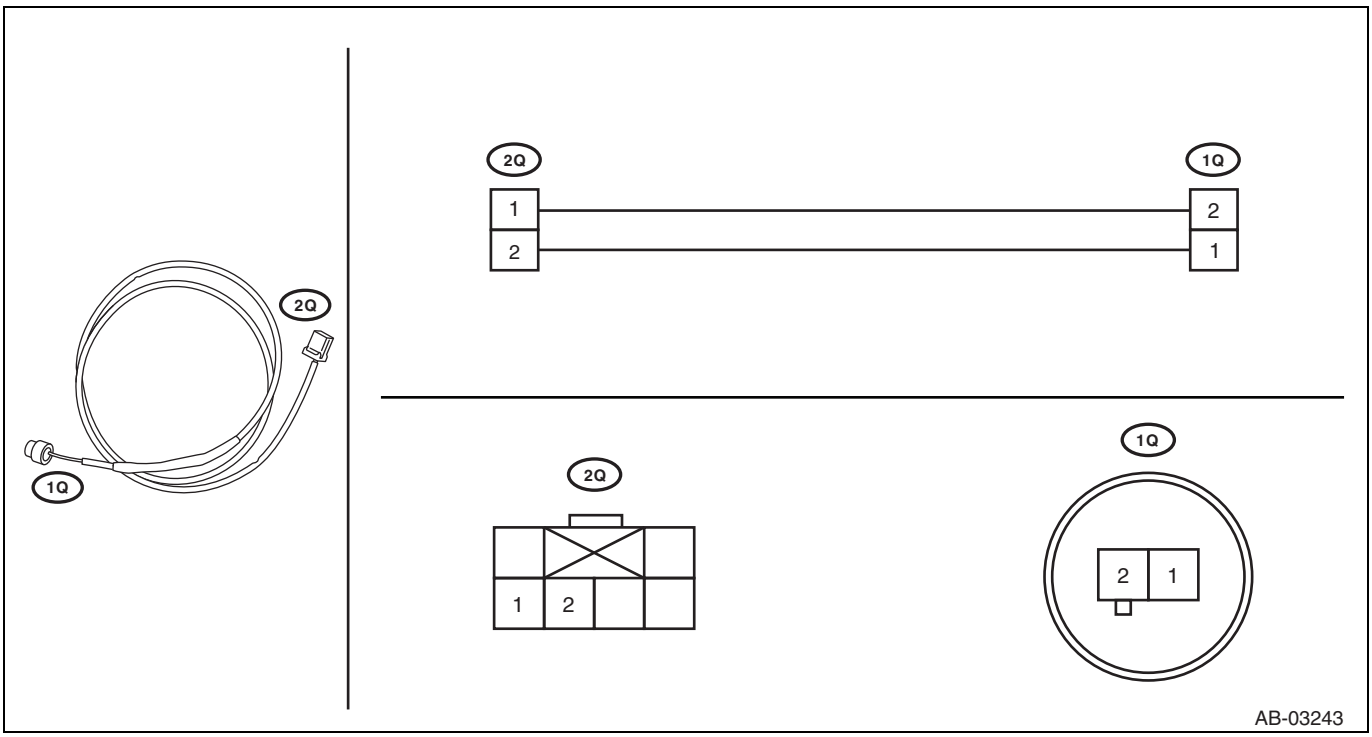

5. Test harness AG

Tool number	Remarks
98299AG070	Used when measuring voltage and resistance of airbag control module.

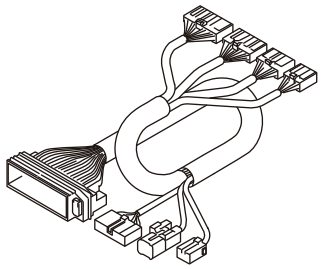

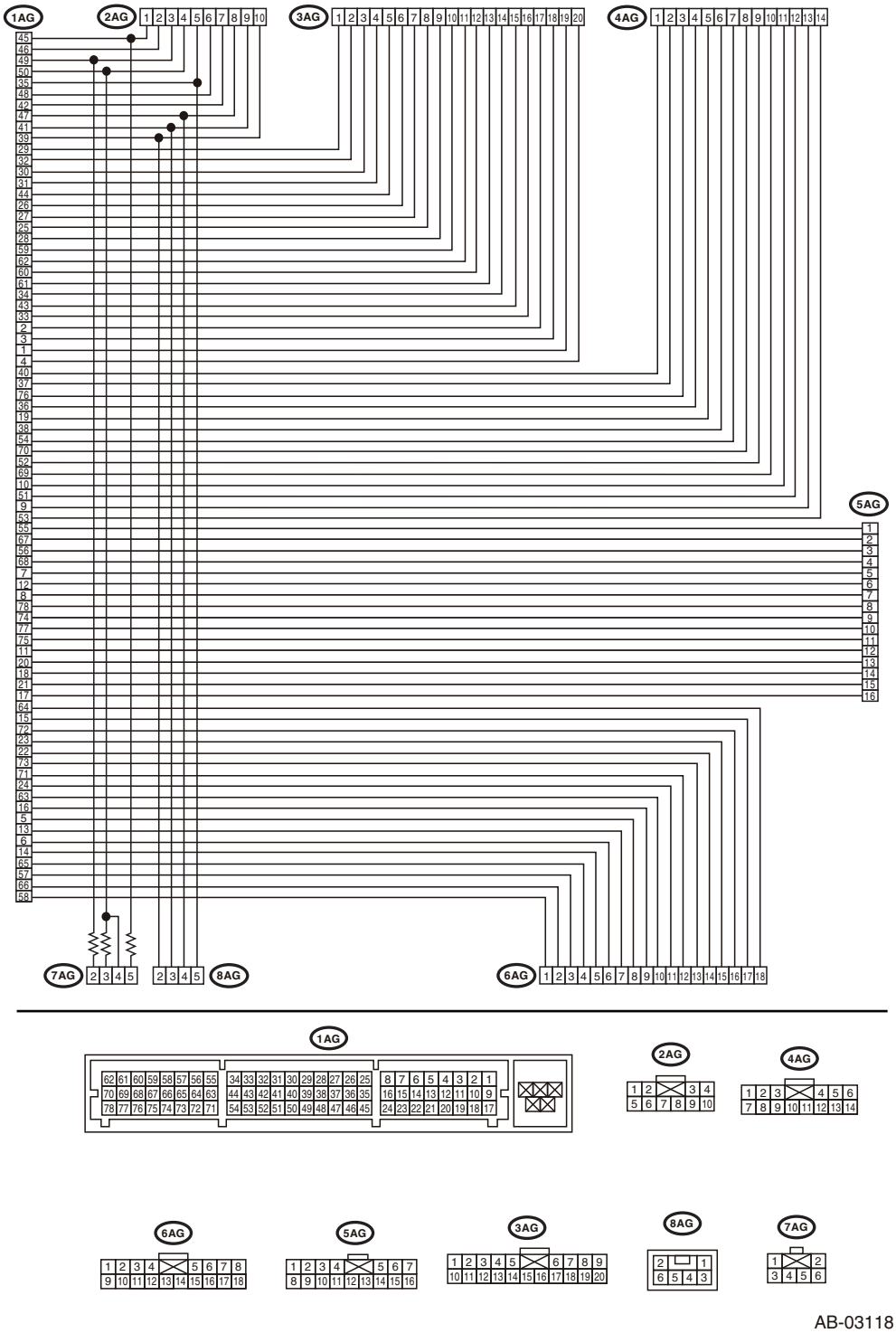

6. Test harness V

Tool number	Remarks
98299AG010	Used when measuring voltage and resistance of side airbag sensor and curtain airbag sensor.

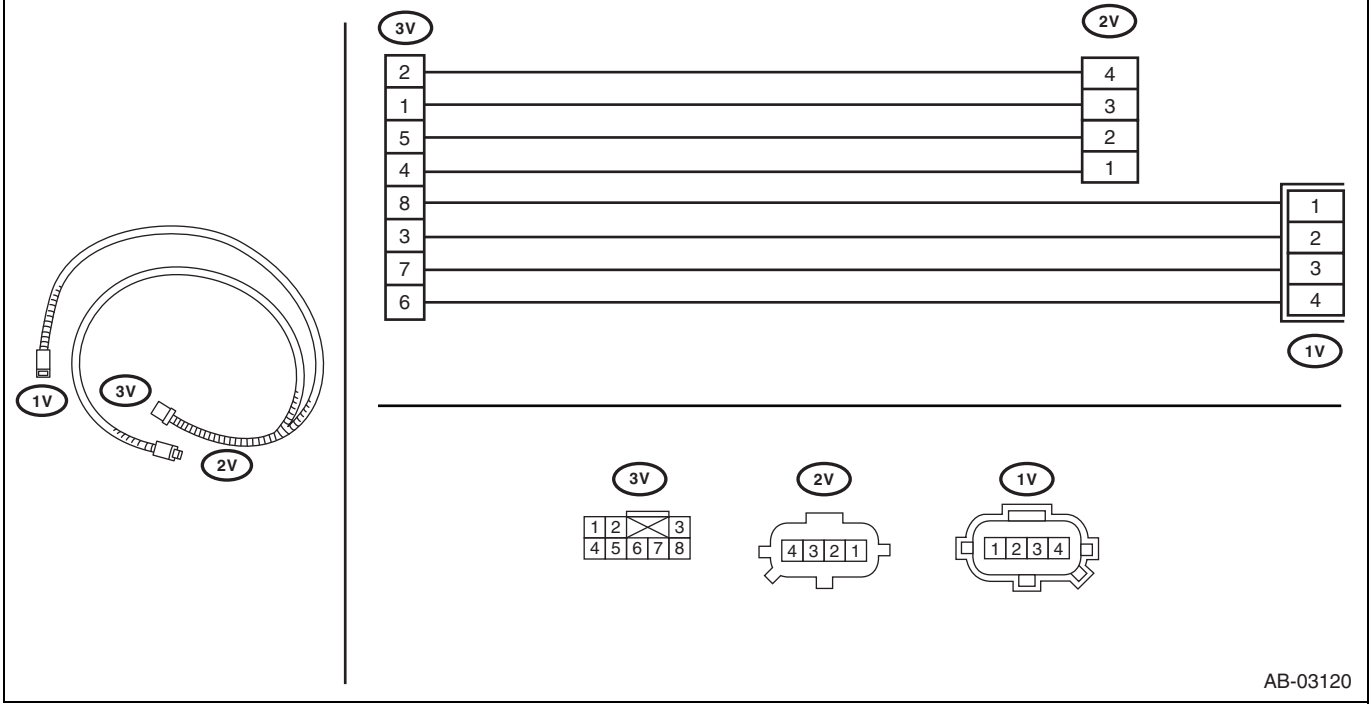

7. Airbag resistor

Tool number	Remarks
98299PA040	Used in replacement of airbag module for which resistance is same as airbag module.

RS

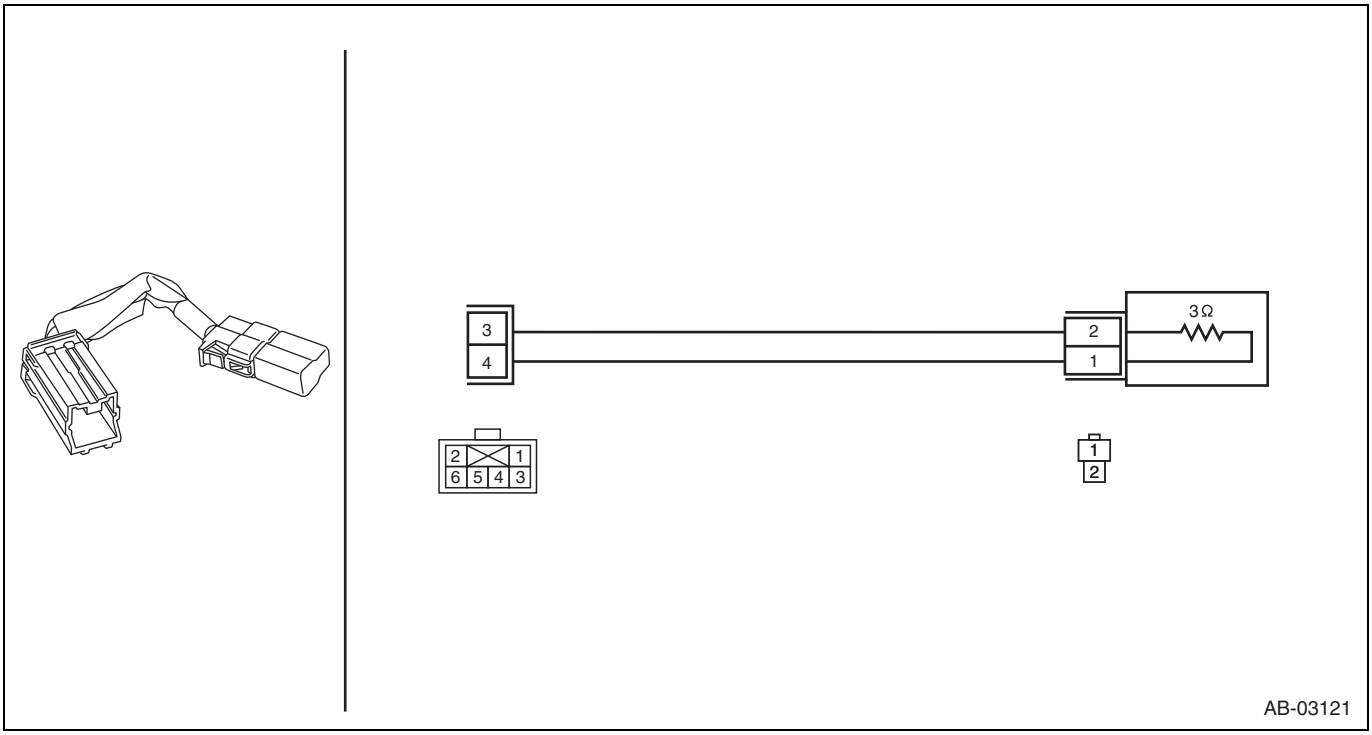

8. Test harness AJ

Tool number	Remarks
98299FG000	Used when measuring power supply and resistance of side airbag harness.

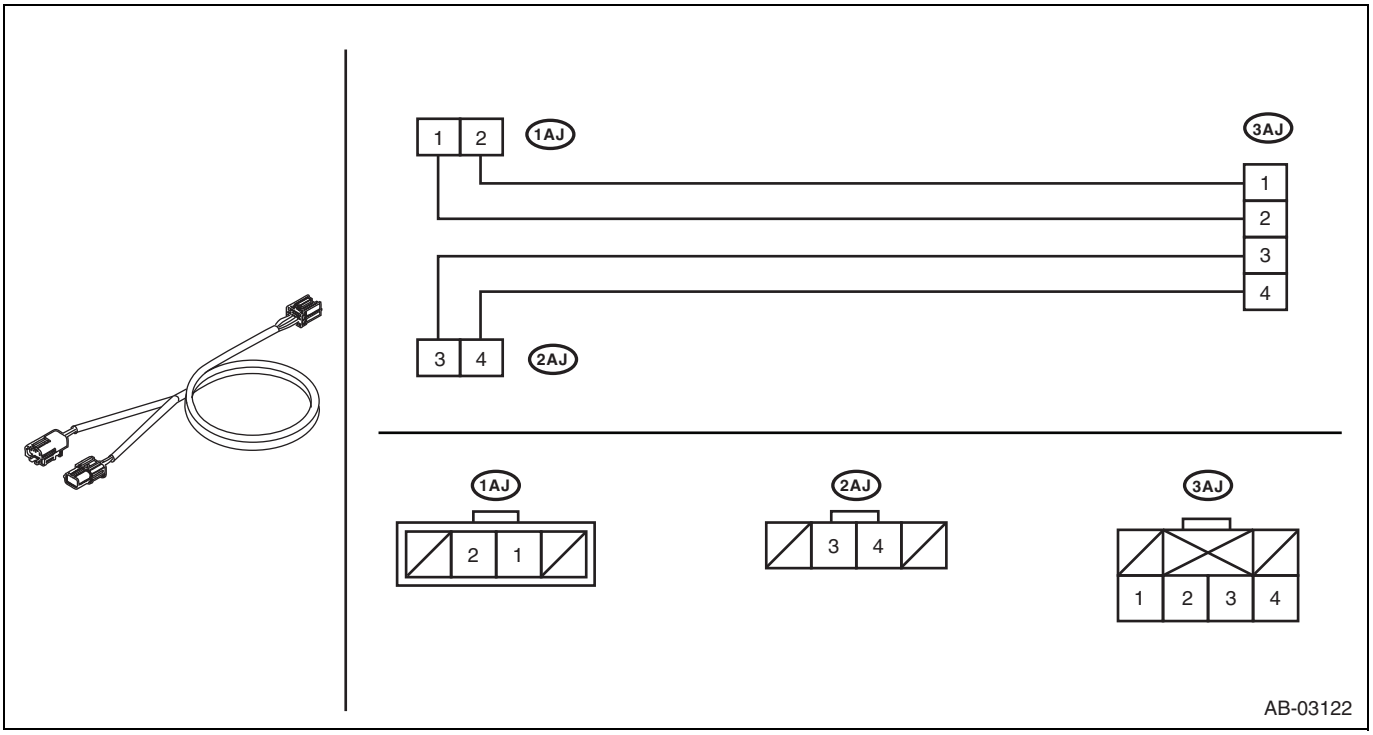

9. Test harness AI

Tool number	Remarks
98299AG090	• Used for diagnoses of side airbag sensor and curtain airbag sensor. • Used together with test harness V.

RS

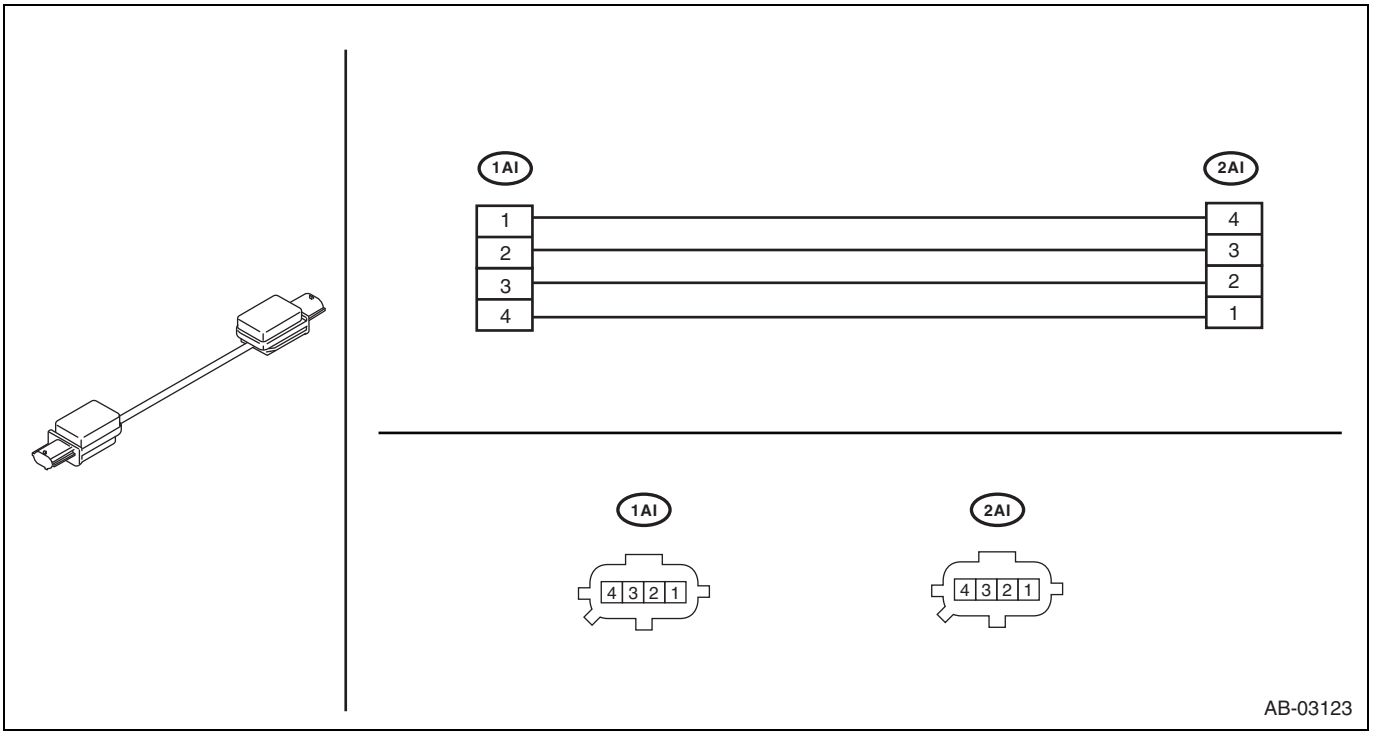

10. Test harness AT

Tool number	Remarks
98299CA0020	Used when measuring power supply and resistance of side airbag harness.

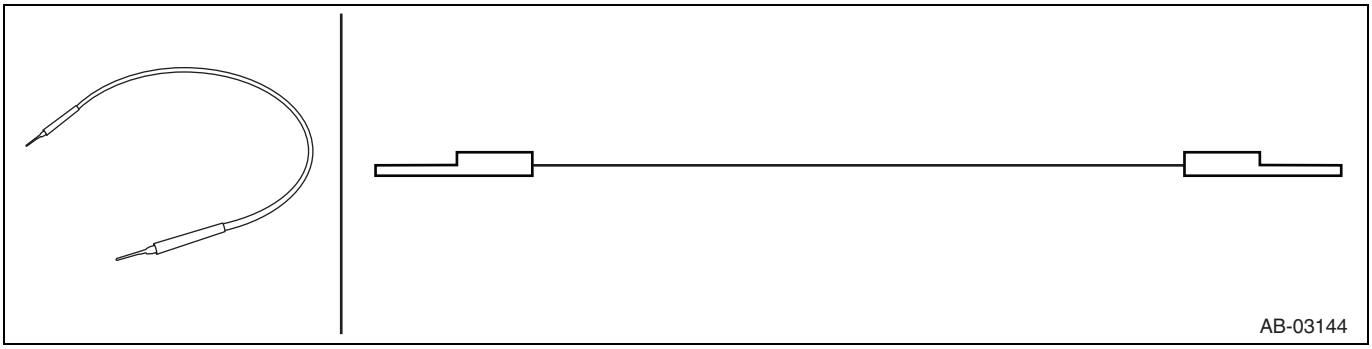

11. Test harness Y

Tool number	Remarks
98299AG040	Used for diagnosing the seat belt buckle switch failure.

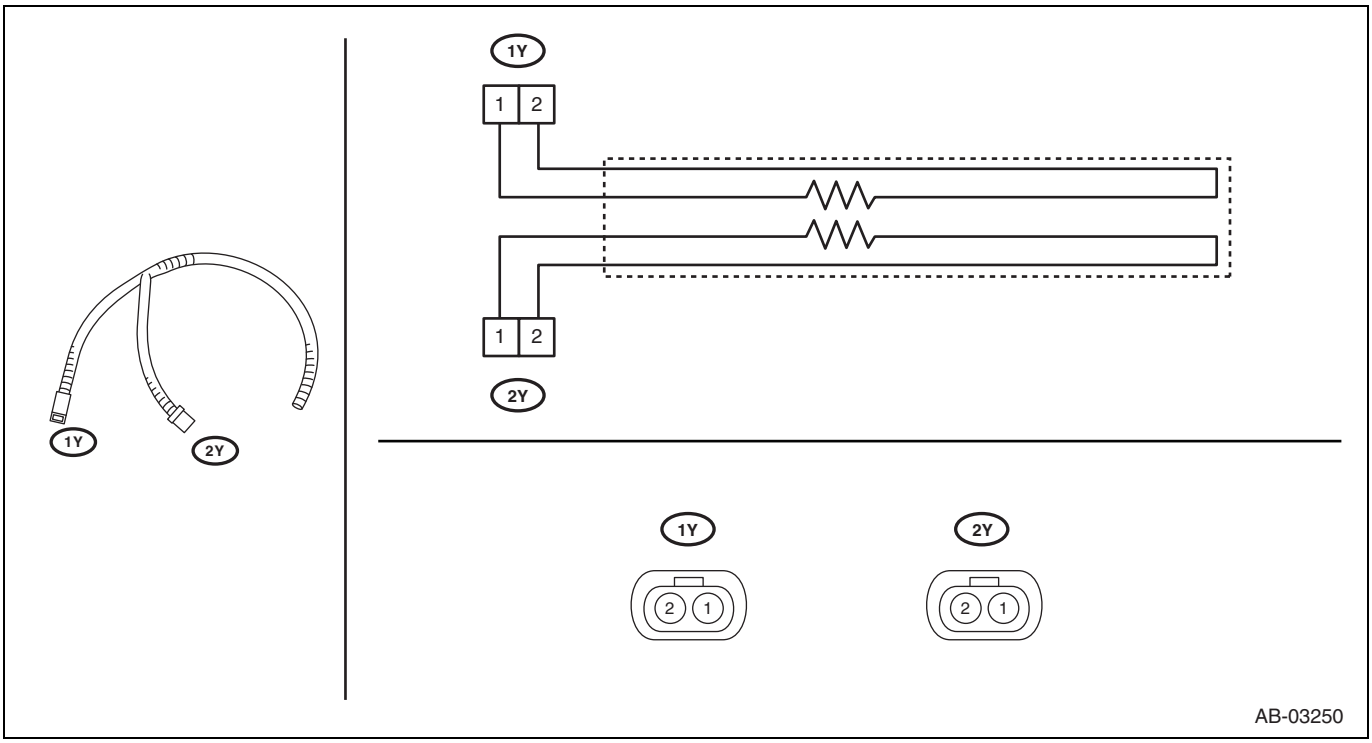

12. Test harness AE

Tool number	Remarks
98299XA030	Adapter harness for test harness Y Used for diagnosing the seat belt buckle switch failure.

RS

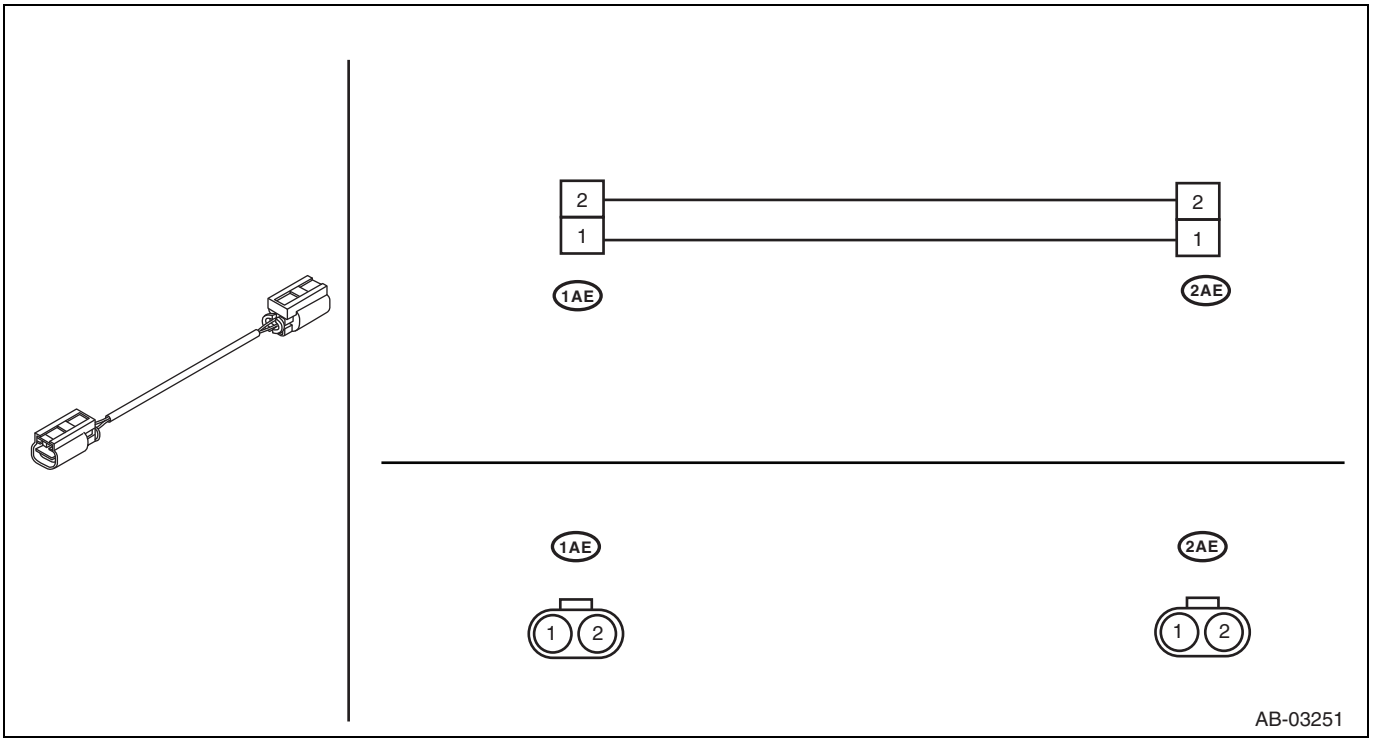

13. Test harness AS

Tool number	Remarks
98299CA010	Used when measuring voltage and resistance of the occupant detection system.

RS

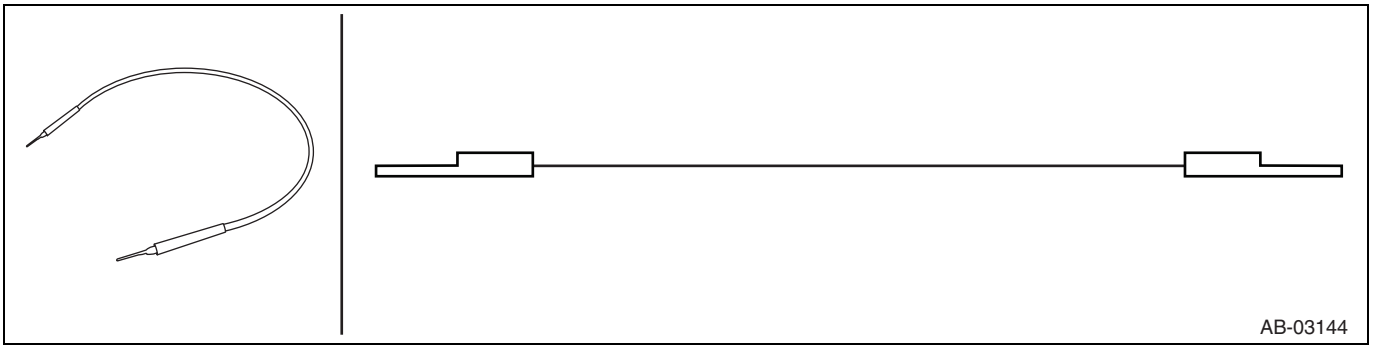

14. Test harness adapter D

Shape	Tool number	Remarks
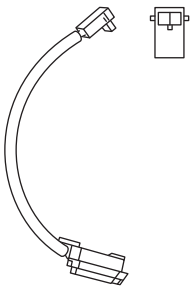 AB-03187	98299SA011	• Used for operation process of driver's airbag module. • Used for operation process of curtain airbag module. • Used for operation process of pretensioner. • Used together with airbag deployment tool. (98299PA030) • Before reuse, replace the repair connector (98299FJ010).

15. Test harness adapter F

Shape	Tool number	Remarks
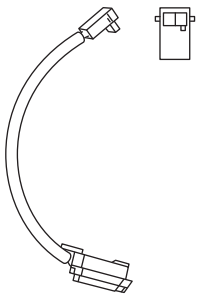 AB-03189	98299SA050	• Used for operation process of pretensioner. • Used together with airbag deployment tool. (98299PA030) • Before reuse, replace the repair connector (98299FJ012).

16. Test harness adapter AM

Shape	Tool number	Remarks
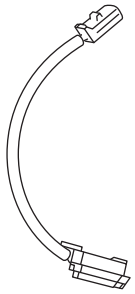 AB-03186	98299FJ000	• Used for operation process of passenger's airbag module. • Used together with airbag deployment tool. (98299PA030)

17. Test harness adapter AR

Shape	Tool number	Remarks
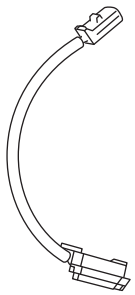 AB-03186	98299CA000	• Used for operation process of side airbag module. • Used together with airbag deployment tool. (98299PA030)

18. Airbag deployment tool

Shape	Tool number	Remarks
 AB-03185	98299PA030	• Used for operation process of airbag module and pretensioner. • Used together with each test harness adapter.

19. Test harness adapter AN

Shape	Tool number	Remarks
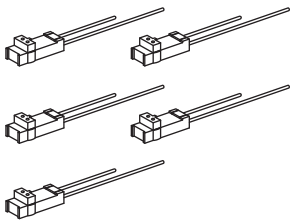 AB-03188	98299FJ010	Repair kit for replacing the melted connector of test harness adapter D.

20. Test harness adapter AO

Shape	Tool number	Remarks
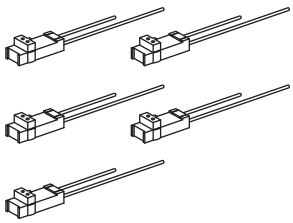 AB-03188	98299FJ020	Repair kit for replacing the melted connector of test harness adapter F.

21. General tool

Tool name	Remarks
Circuit tester	Used for measuring resistance, voltage and current.
Probe	Used when measuring voltage and resistance of passenger's airbag module.
Oscilloscope	Used when measuring sensor.

Parts location

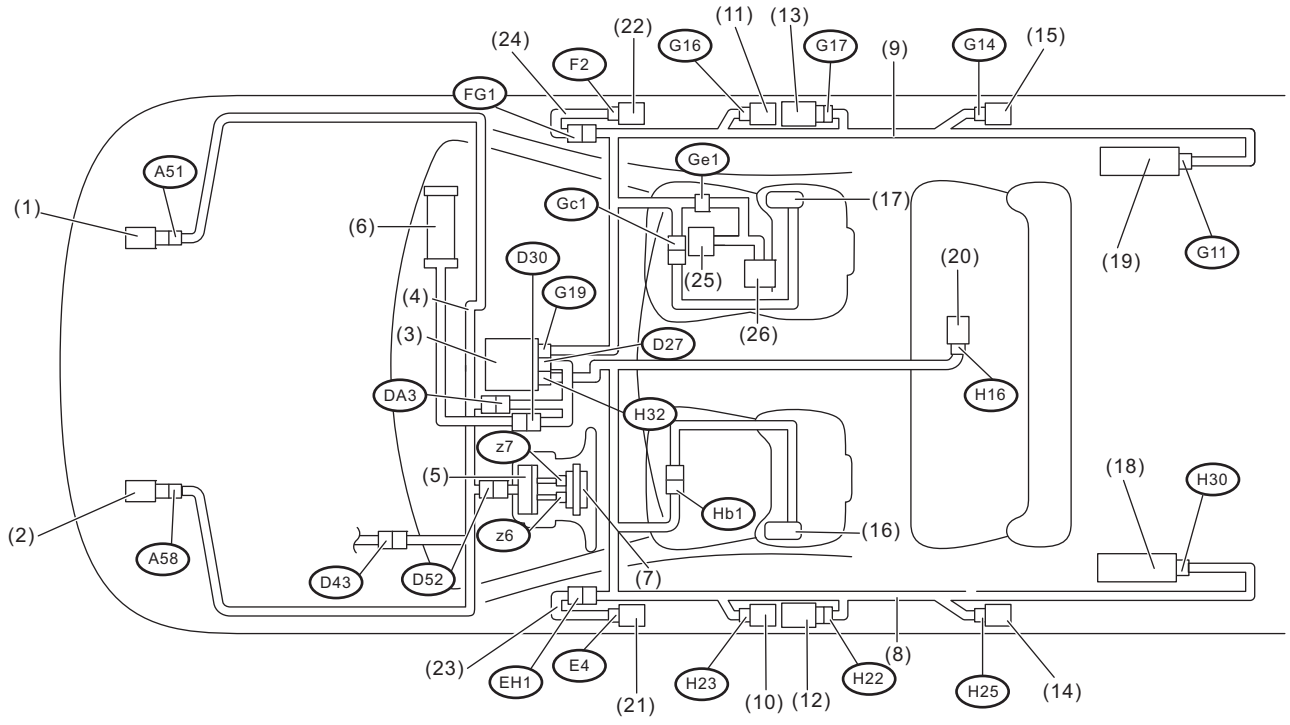

AB-10202

RS

Captions in illustration

(1)	Front sub sensor RH	(2)	Front sub sensor LH
(3)	Airbag control module	(4)	Airbag main harness
(5)	Roll connector	(6)	Passenger's airbag inflator
(7)	Driver's airbag inflator	(8)	Airbag rear harness LH
(9)	Airbag rear harness RH	(10)	Side airbag sensor LH
(11)	Side airbag sensor RH	(12)	Seat belt pretensioner LH
(13)	Seat belt pretensioner RH	(14)	Curtain airbag sensor LH
(15)	Curtain airbag sensor RH	(16)	Side airbag inflator LH
(17)	Side airbag inflator RH	(18)	Curtain airbag inflator LH
(19)	Curtain airbag inflator RH	(20)	Satellite safing sensor
(21)	Front door impact sensor LH	(22)	Front door impact sensor RH
(23)	Door harness LH	(24)	Door harness RH
(25)	Occupant detection control module	(26)	Buckle switch

Captions in illustration

Connector No.	D52	D27	D30	A58	A51	H32	G19	Hb1	H22
Pin	4	30	4	2	2	24	24	2	2
Connector color	Yellow	Yellow	Yellow	Yellow	Yellow	Yellow	Yellow	Yellow	Black
Male/Female	Female	Female	Female	Female	Female	Female	Female	Female	Female

Connector No.	H23	Gc1	G17	G16	G11	H25	H30	G14	z6
Pin	4	2	2	4	2	4	2	4	2
Connector color	Yellow	Yellow	Black	Yellow	Black	Yellow	Black	Yellow	Black
Male/Female	Female	Female	Female	Female	Female	Female	Female	Female	Female

Connector No.	E4	EH1	FG1	F2	H16	Ge1	z7
Pin	2	2	2	2	2	3	2

Connector color	Yellow	Yellow	Yellow	Yellow	Yellow	Grey	Orange
Male/Female	Female	Female	Female	Female	Female	Female	Female

Airbag connector

1. How to disconnect the power supply
   CAUTION:
   When pulling the slide lock or disconnecting connector, be sure to hold the connector, not the harness.
   (1) Push the lock (A).
   (2) While holding down the lock (A), disconnect the connector.

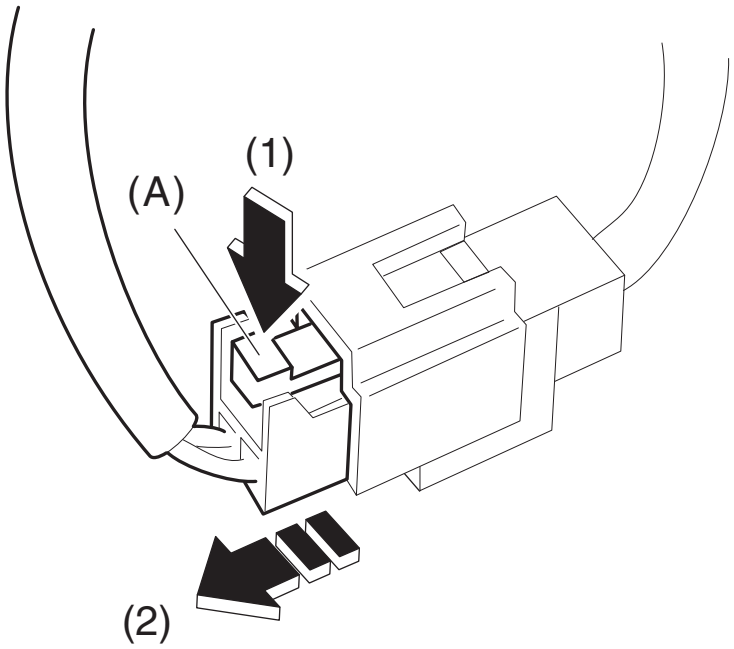

AB-03125

2. How to connect the power supply
   CAUTION:
   Be sure to insert the connector in until it is locked. Then pull it gently to make sure that it is locked.
   (1) Holding the connector, push it in securely until a clicking sound is heard.

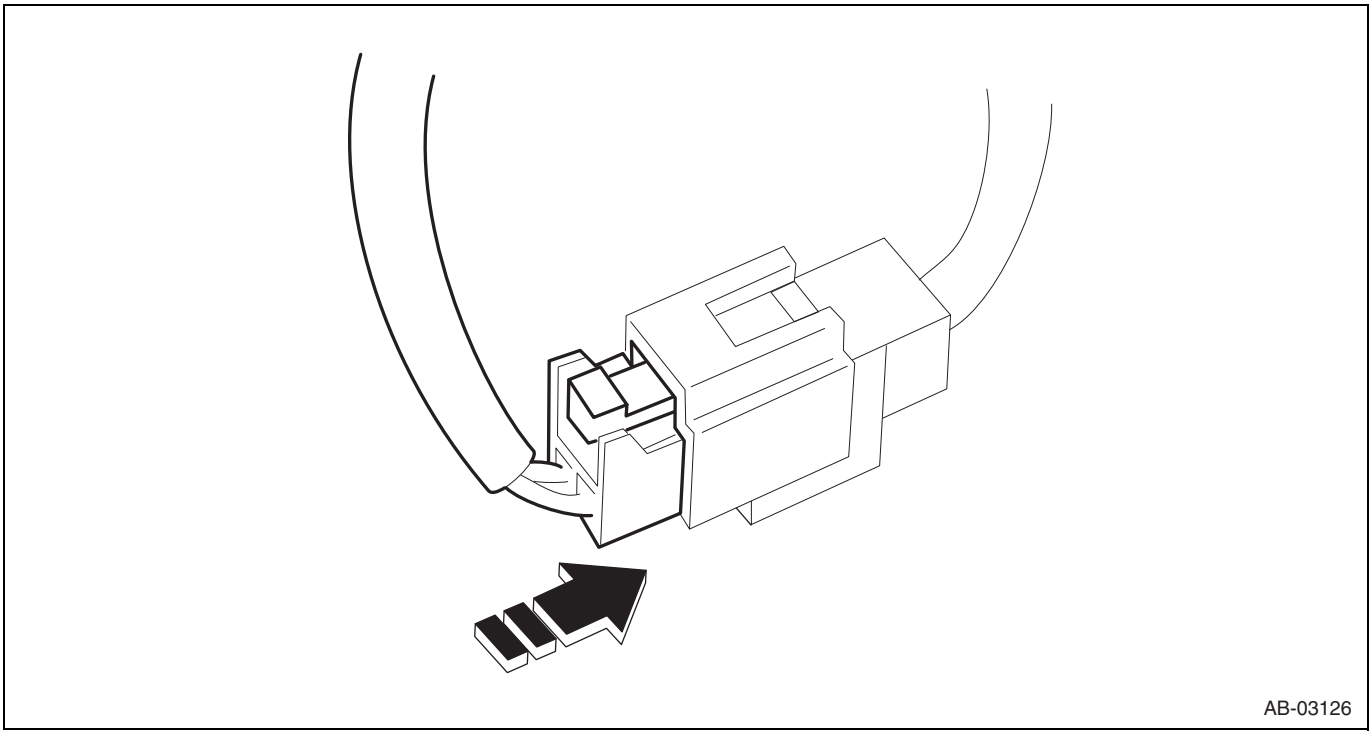

3. How to disconnect the airbag control module
   (1) Push the lock lever plate (A).
   (2) While holding down the lock lever plate (A), pull the lever toward you.

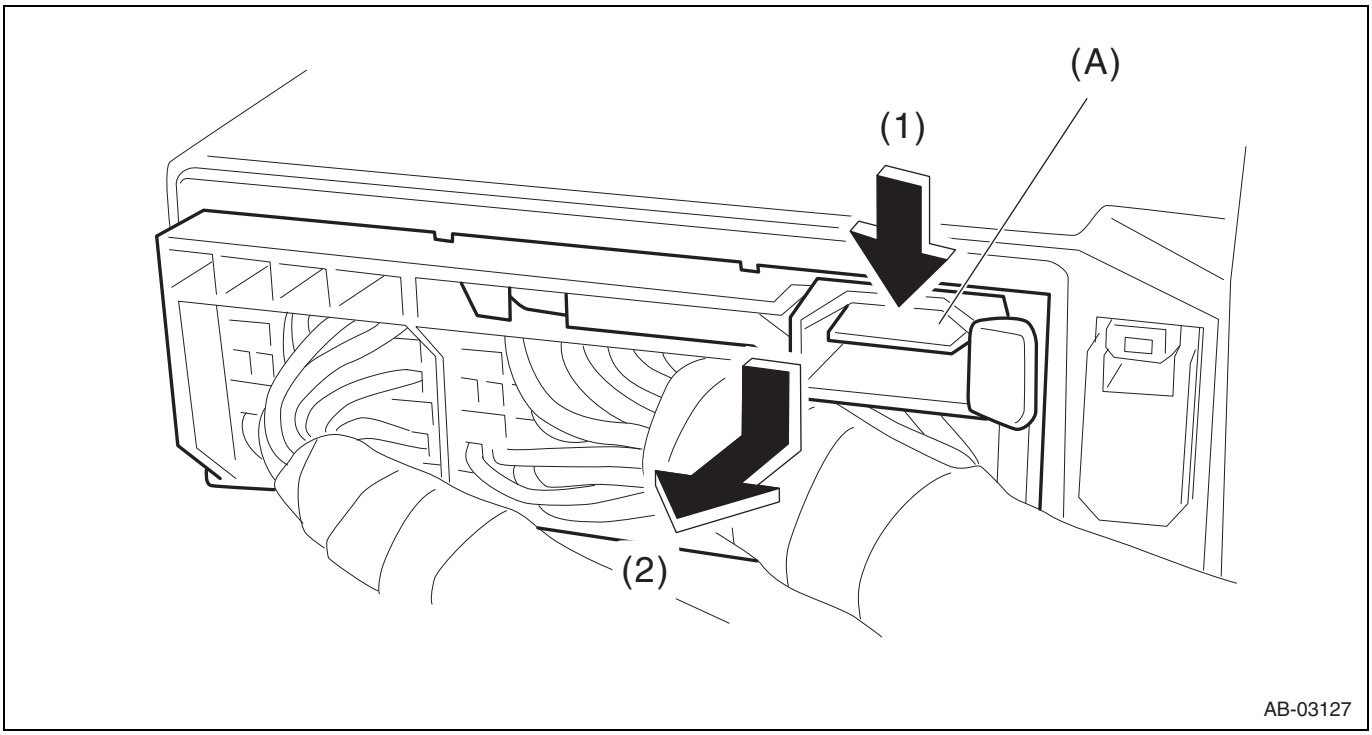

4. How to connect the airbag control module
   CAUTION:
   Be sure to insert the connector in until it is locked. Then pull it gently to make sure that it is locked.
   (1) Insert the connector and push the lock lever in securely.
5. How to disconnect the driver's airbag module (roll connector)
   CAUTION:
   When pulling the slide lock or disconnecting connector, be sure to hold the connector, not the harness.
   (1) Pull the slide lock (A) in the direction of arrow.
   (2) With the slide lock pulled, disconnect the connector.

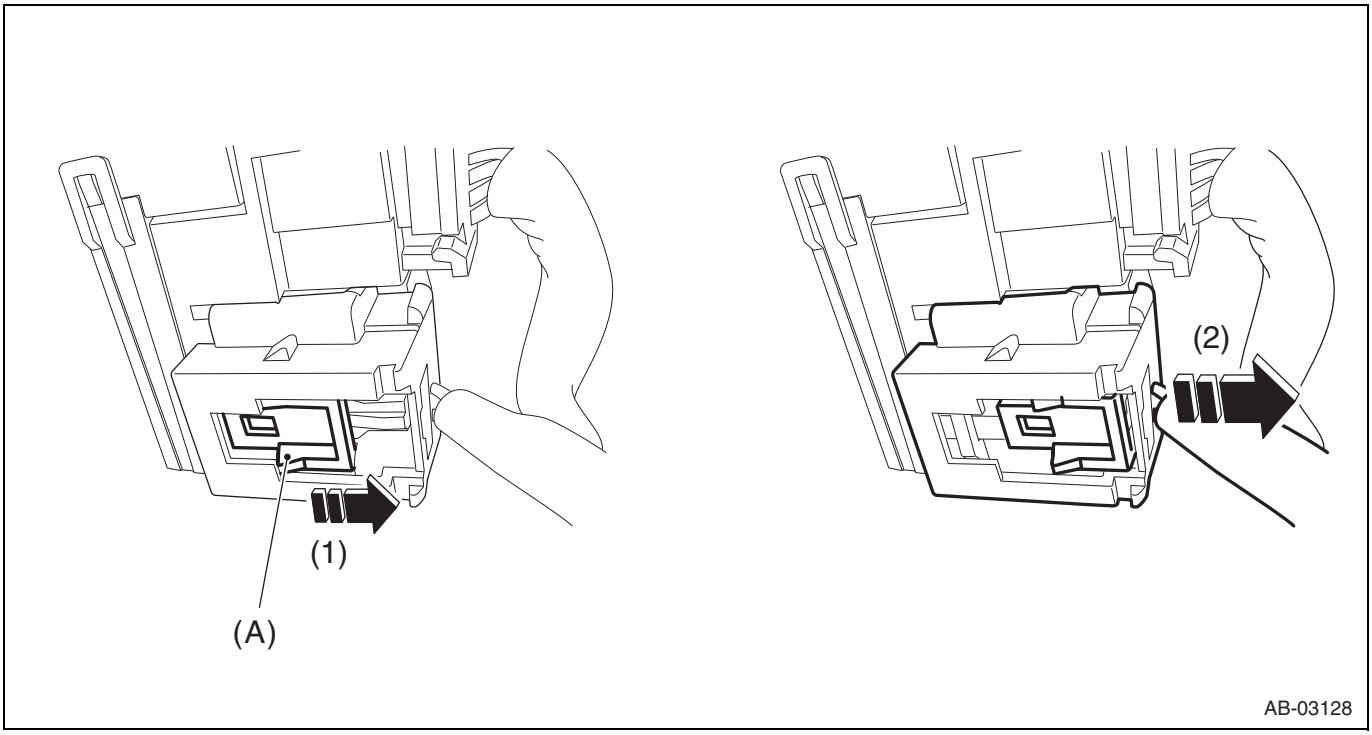

6. How to connect the driver's airbag module (roll connector)
   CAUTION:
   Be sure to insert the connector in until it is locked. Then pull it gently to make sure that it is locked.
   (1) Holding the connector, push it in securely until a clicking sound is heard.

RS

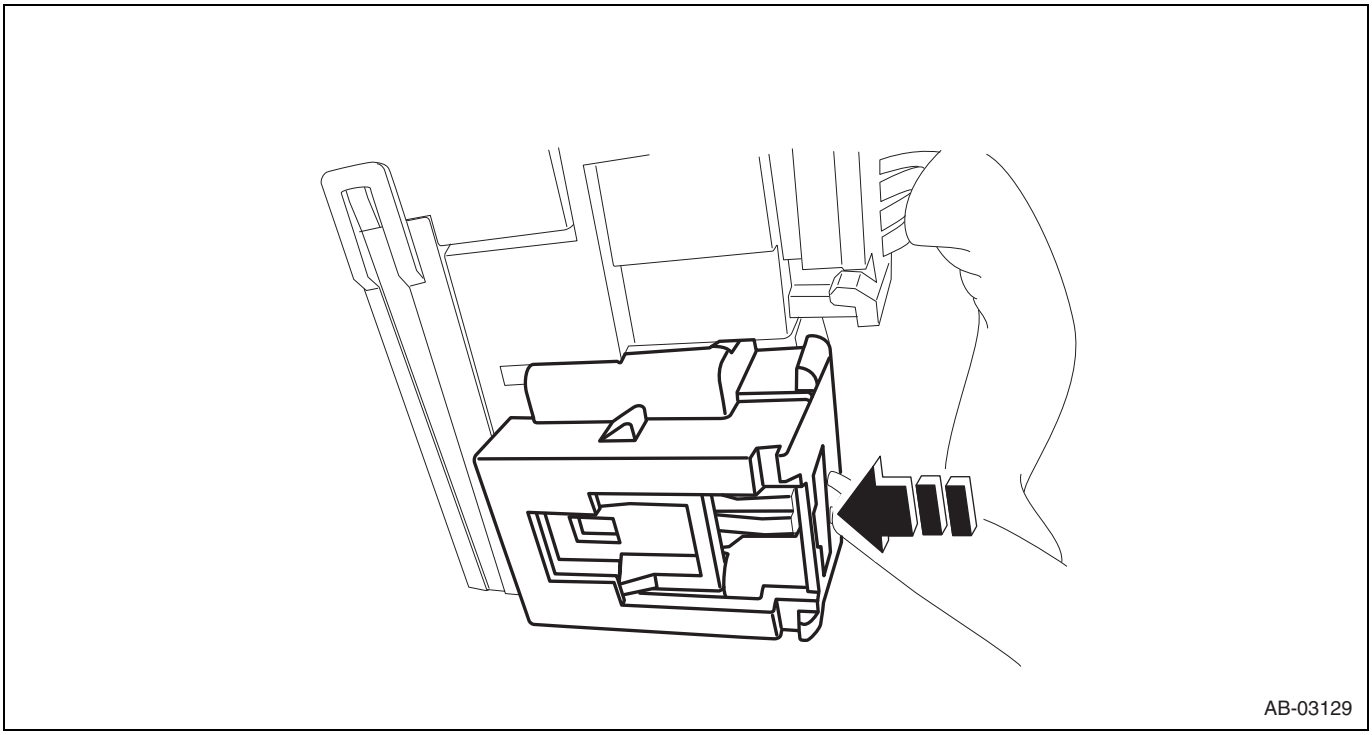

7. How to disconnect the passenger's airbag module
   CAUTION:
   When pulling the slide lock or disconnecting connector, be sure to hold the connector, not the harness.
   (1) Pull the slide lock (A) in the direction of arrow.
   (2) With the slide lock pulled, disconnect the connector.

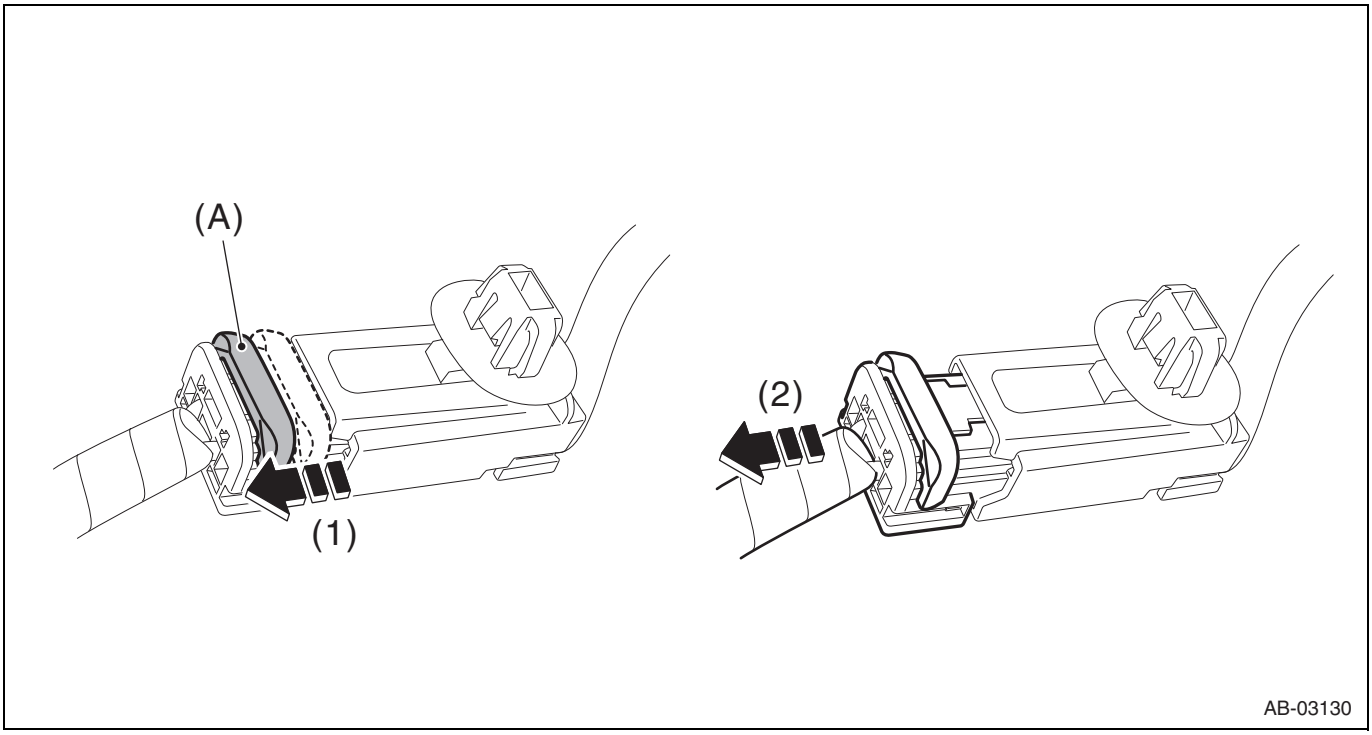

8. How to connect the passenger's airbag module
   CAUTION:
   Be sure to insert the connector in until it is locked. Then pull it gently to make sure that it is locked.
   (1) Holding the connector, push it in securely until a clicking sound is heard.

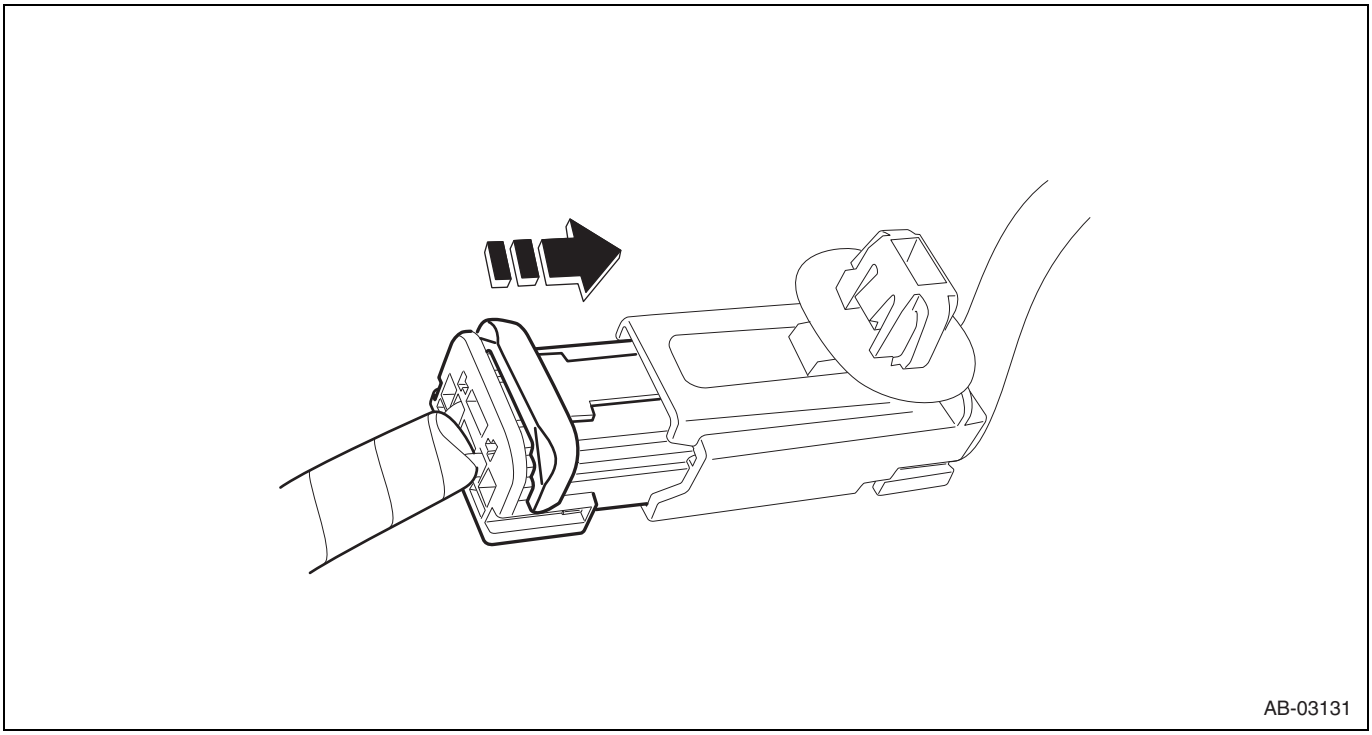

9. How to disconnect the driver's airbag module, the curtain airbag module and the pretensioner
   (1) Using a flat tip screwdriver, pry the push lock upward to unlock.
   (2) Pull the connector to disconnect from the airbag module ASSY or the retractor ASSY.

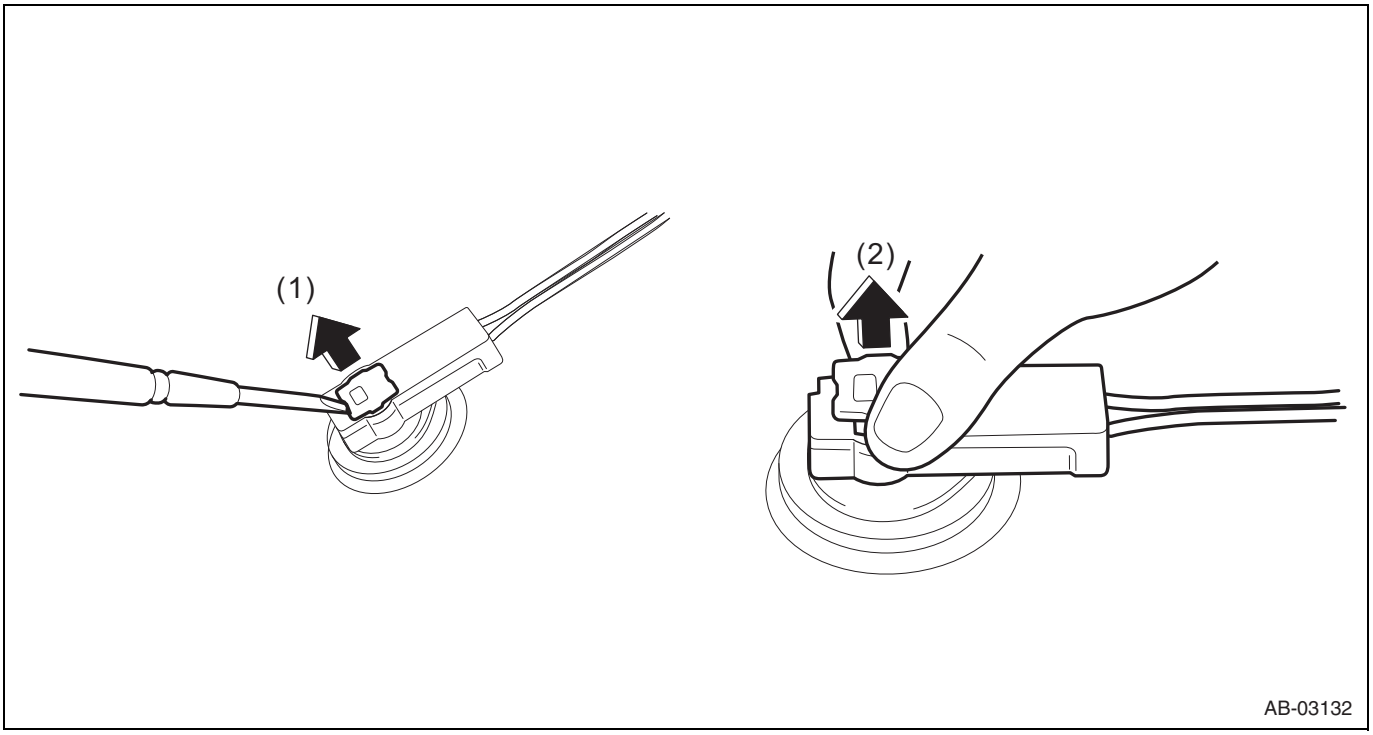

10. How to connect the driver's airbag module, the curtain airbag module and the pretensioner
    CAUTION:
    - Be sure to insert the connector in until it is locked.
    - Press in the push lock securely. Then pull it gently to make sure that it is locked.

    (1) Connect the connector in the reverse order of disconnecting. At this time, be sure to insert until a clicking sound is heard.

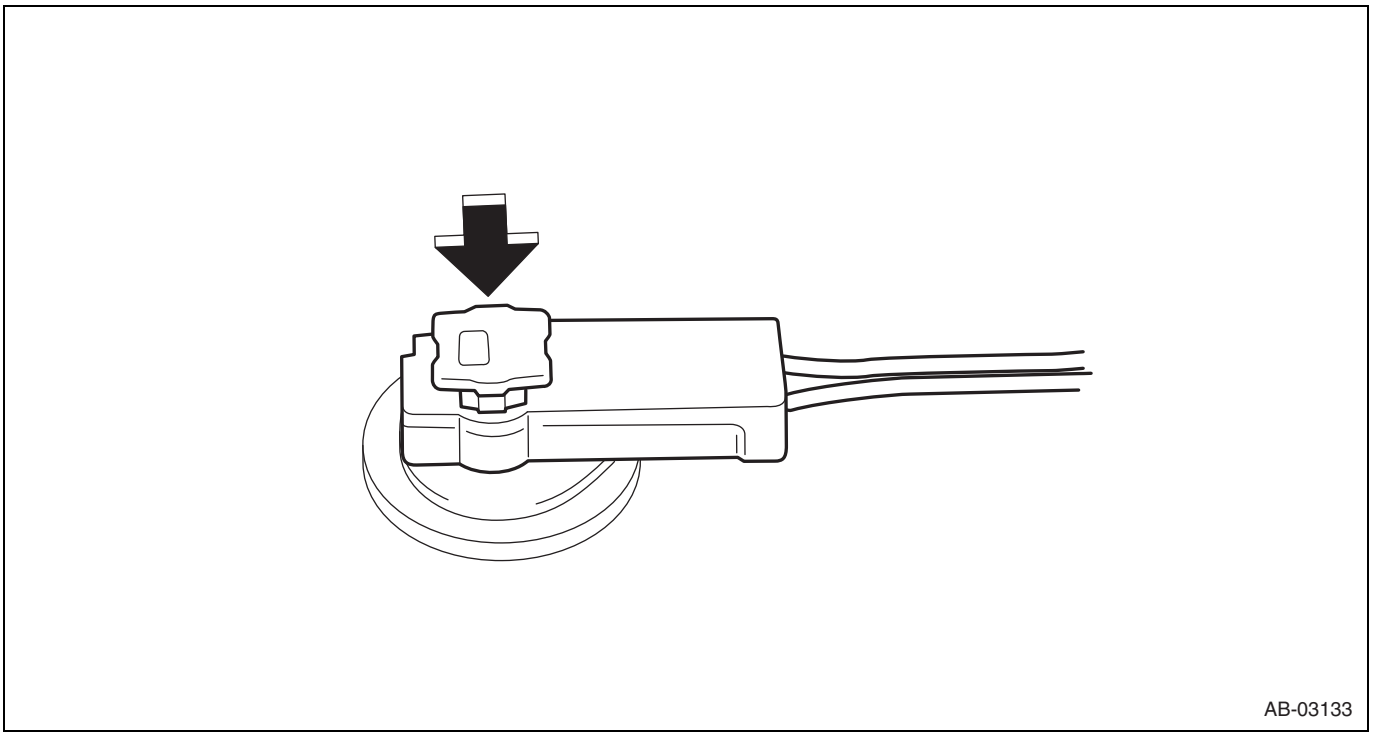

11. How to disconnect the front sub sensor
    CAUTION:
    When pulling the slide lock or disconnecting connector, be sure to hold the connector, not the harness.
    (1) Push the lock arm.
    (2) Holding outer part, pull it one step in the direction of arrow.

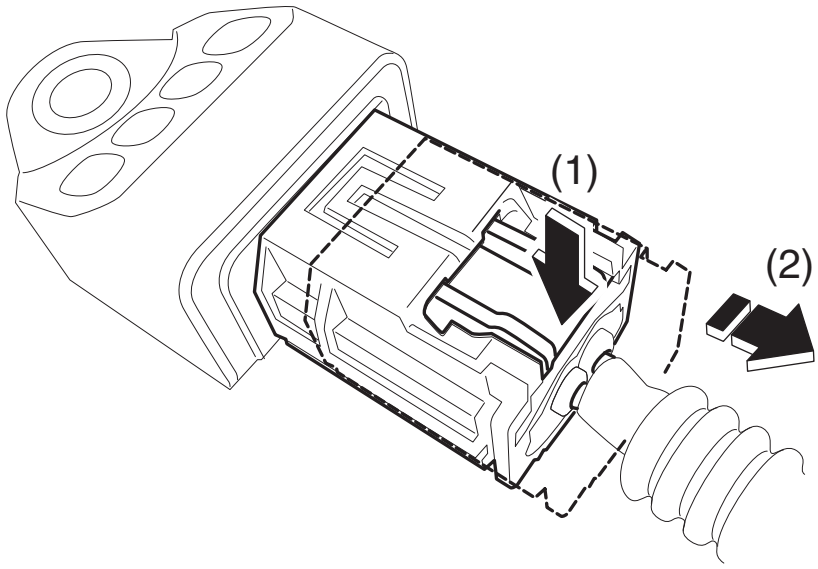

AB-03134

(3) Push the lock arm again.

(4) Holding outer part, pull it in the direction of arrow to disconnect the connector.

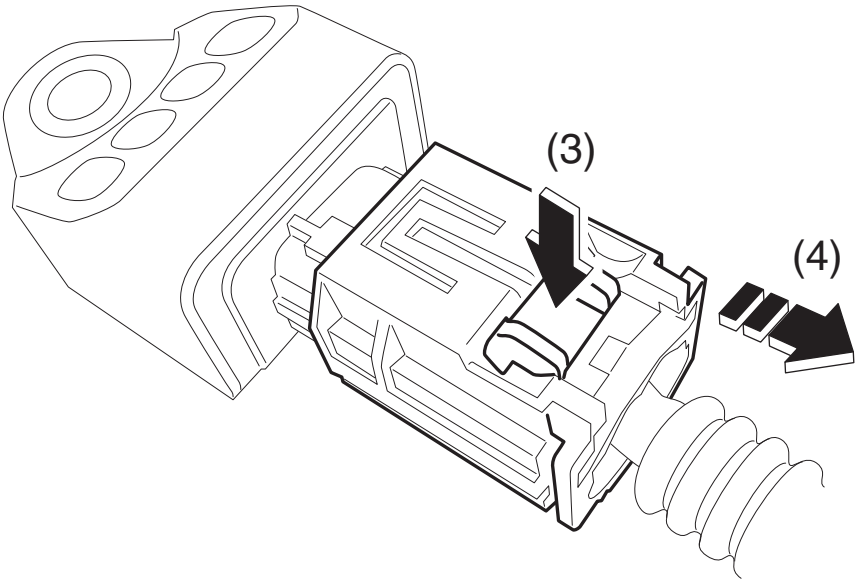

AB-03135

12. How to connect the front sub sensor

CAUTION:

Be sure to insert the connector in until it is locked. Then pull it gently to make sure that it is locked.

(1) Connect the connector in the reverse order of disconnecting. At this time, be sure to insert until a clicking sound is heard.

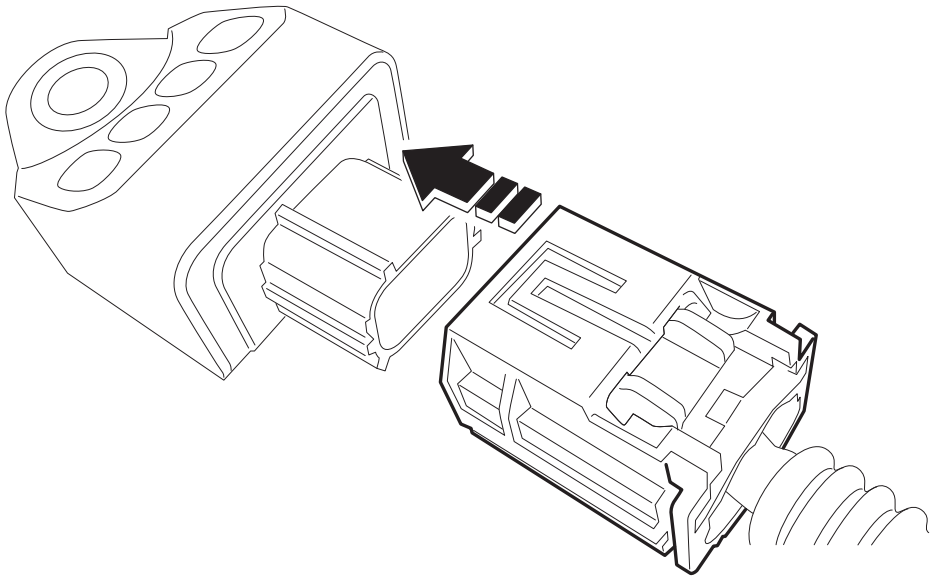

AB-03136

13. How to disconnect the front door impact sensor and the satellite safing sensor
    CAUTION:
    When pulling the slide lock or disconnecting connector, be sure to hold the connector, not the harness.
    (1) Holding outer part (A), pull it in the direction of arrow.

RS

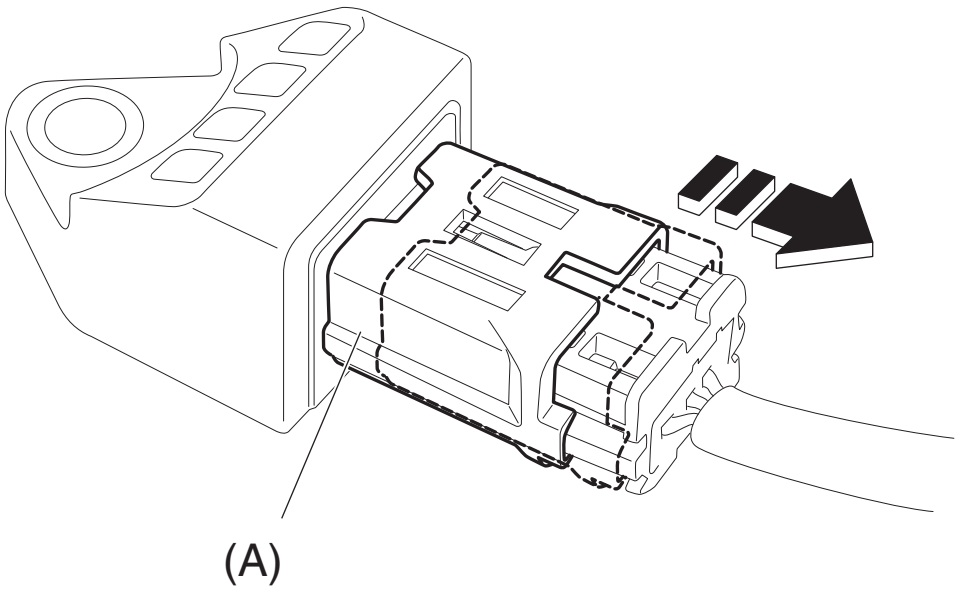

AB-03137

14. How to connect the front door impact sensor and the satellite safing sensor
    CAUTION:
    - Outer side (A) moves back, and so do not touch the outer part.
    - Be sure to insert the connector in until it is locked. Then pull it gently to make sure that it is locked.

    (1) Holding the connector, push it in securely until a clicking sound is heard.

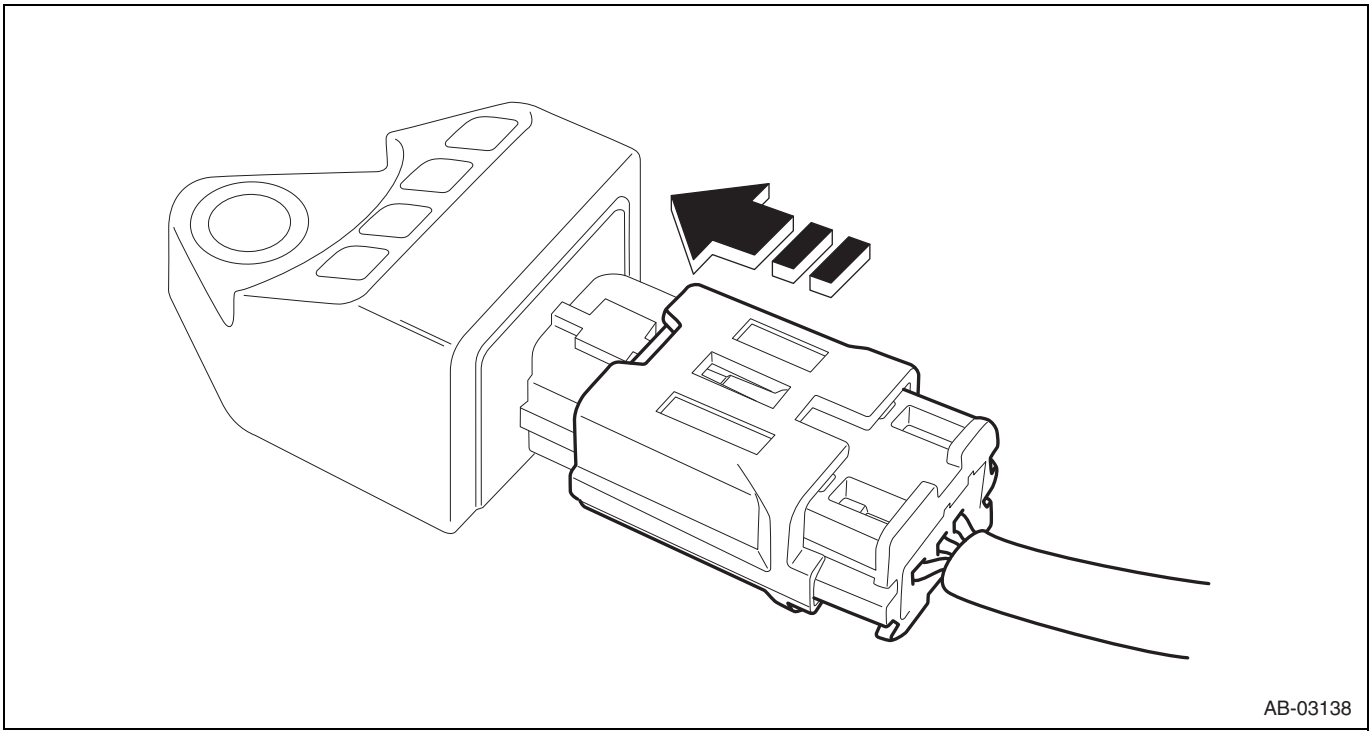
AB-03138

15. How to disconnect the side airbag sensor and the curtain airbag sensor
    CAUTION:
    When pulling the slide lock or disconnecting connector, be sure to hold the connector, not the harness.
    (1) Push the lock arm.
    (2) Holding outer part, pull it one step in the direction of arrow.

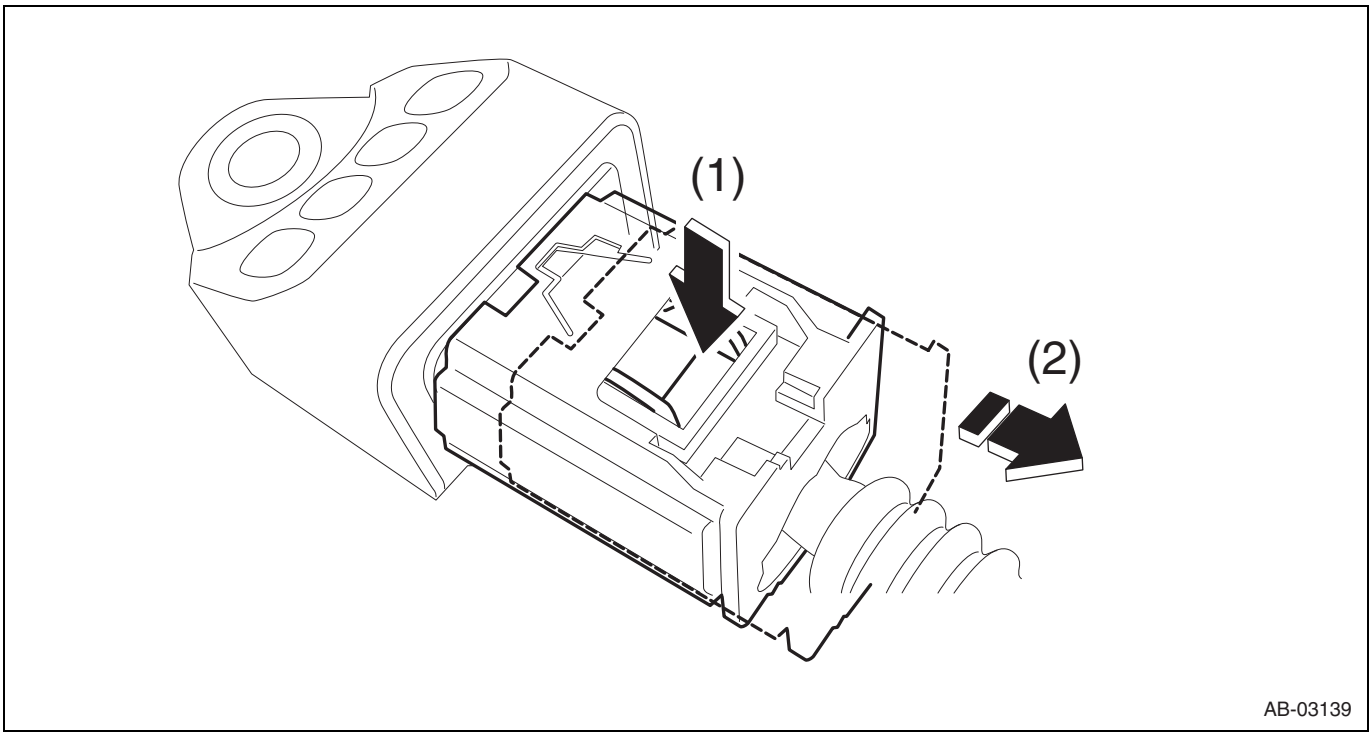

AB-03139

    (3) Push the lock arm again.
    (4) Holding outer part, pull it in the direction of arrow to disconnect the connector.

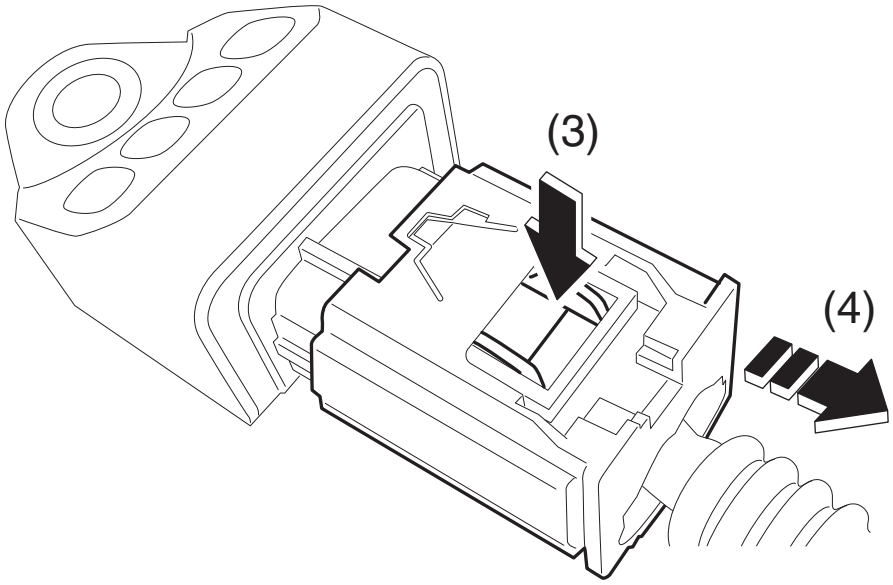

AB-03140

16. How to connect the side airbag sensor and the curtain airbag sensor

CAUTION:

Be sure to insert the connector in until it is locked. Then pull it gently to make sure that it is locked.

(1) Holding the connector, push it in securely until a clicking sound is heard.

RS

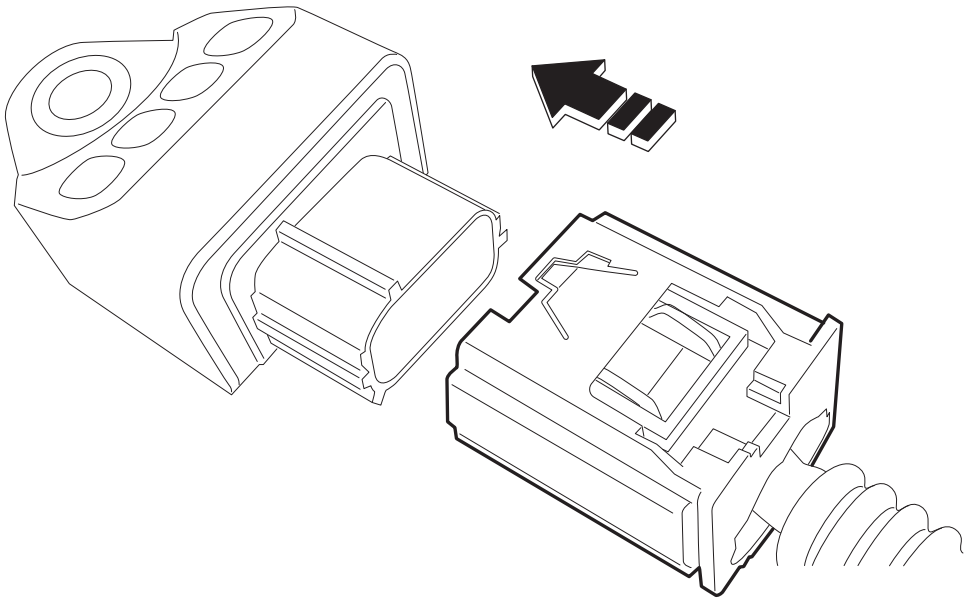

AB-03141

17. How to disconnect the side airbag module

CAUTION:

When pulling the slide lock or disconnecting connector, be sure to hold the connector, not the harness.

(1) Push the lock arm.

(2) Holding outer part, pull it one step in the direction of arrow.

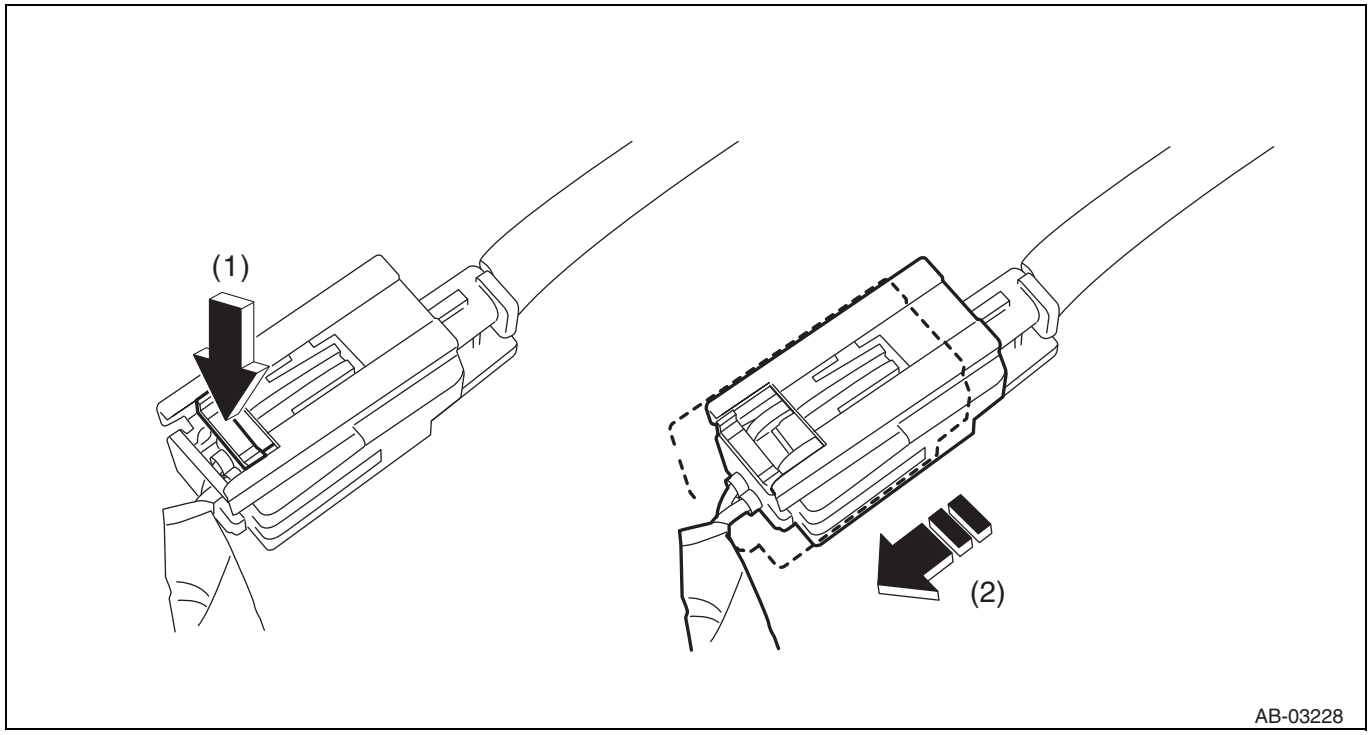

(3) Push the lock arm again.

(4) Holding outer part, pull it in the direction of arrow to disconnect the connector.

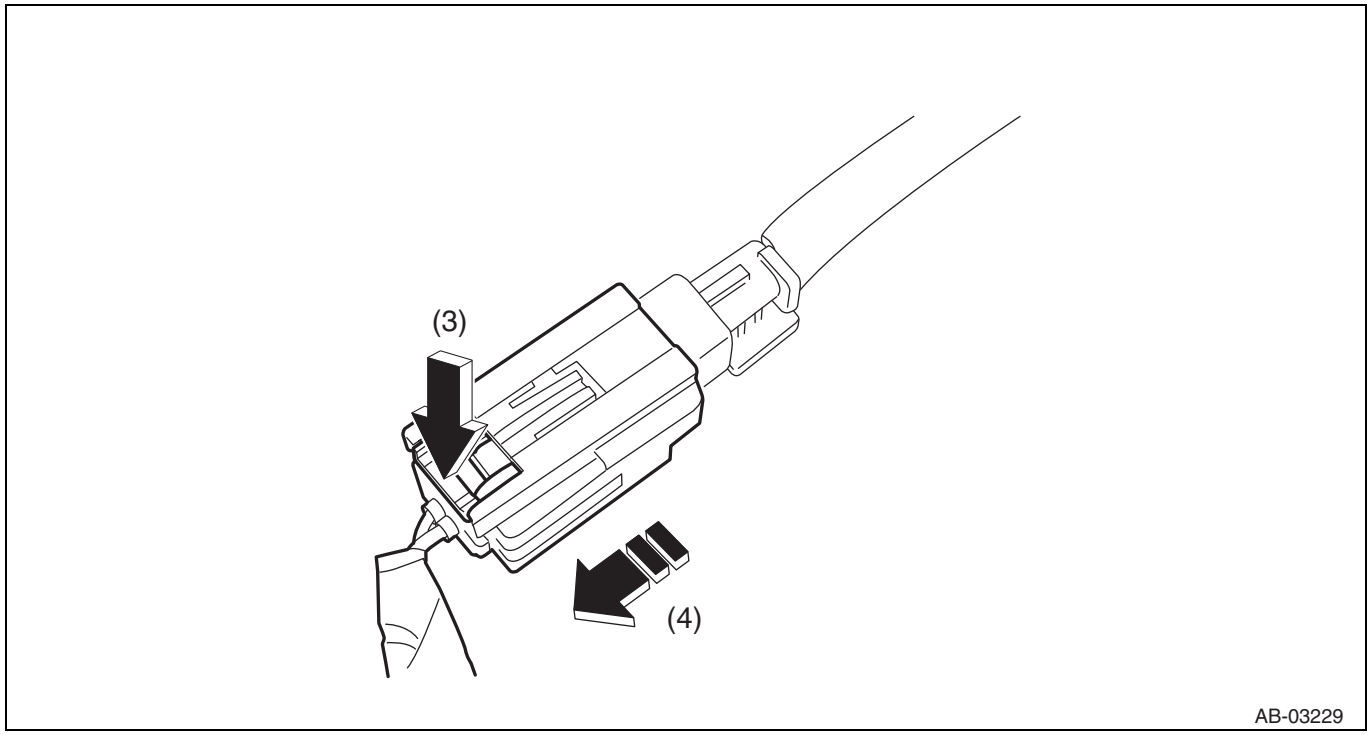

18. How to connect the side airbag module

CAUTION:

Be sure to insert the connector in until it is locked. Then pull it gently to make sure that it is locked.

(1) Connect the connector in the reverse order of disconnecting. At this time, be sure to insert until a clicking sound is heard.

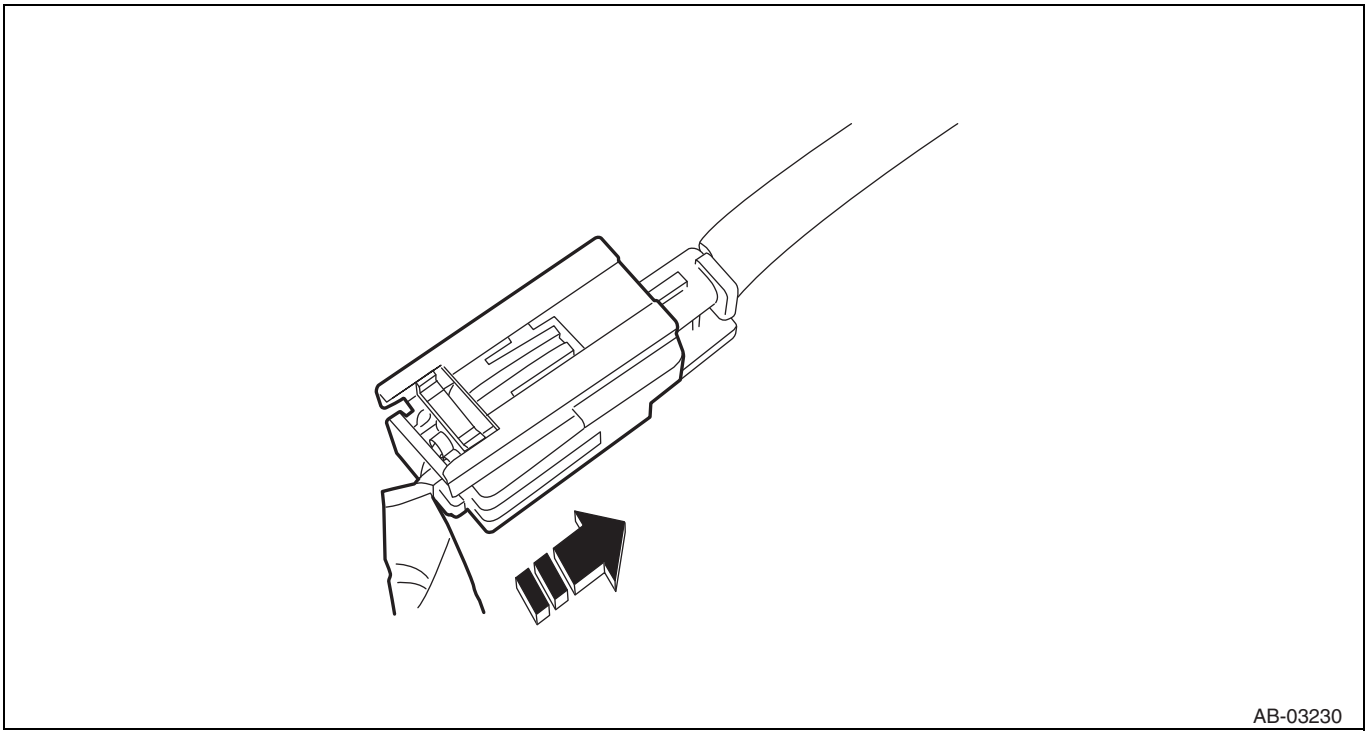

Inspection items after a collision

1. Inspection

   If the vehicle is involved in a collision, even if it is a slight collision, be sure to check the following systems.

   (1) Driver's airbag module ASSY

   (a)In case of a frontal collision (driver's airbag module ASSY activated), replace the following parts with new ones.

   1. Replace the following parts with new parts.
      - Airbag control module
      - Driver side air bag module
      - Passenger's airbag module (if activated)
      - Side airbag module (if activated)
      - Curtain airbag module (RH and LH/if activated)
      - Seat belt pretensioner (RH and LH)
      - Front sub sensor (RH and LH)
      - Instrument panel ASSY (because it is integrated with passenger's airbag module) (if the passenger's airbag module has been activated)
      - Steering wheel
      - Column ASSY - steering
      - Roll connector
      - Pad ASSY - front seat backrest (if the side airbag has been activated)
      - Frame ASSY - front seat cushion (if the side air bag has been activated)
      - Frame ASSY - front seat backrest (if the side airbag has been activated)
      - Cover COMPL - front seat backrest (if the side airbag has been activated)
      - Trim panel - roof ASSY (if the curtain airbag has been activated)
      - Trim panel for each pillar (if the curtain airbag has been activated)
   2. Visually inspect the following items, and replace a damaged part, if any, with a new one.
      - Universal joint ASSY - steering
      - Steering gear box
      - Beam COMPL - steering
      - Body side harness and connector connected to the replaced part
   3. Inspect the following items, and replace a faulty part, if any, with a new one.
      - Power steering control module (Refer to PA - 3for the inspection method.)

   (b)In case of a frontal collision (driver's airbag module not activated)

Visually inspect the following items, and replace a damaged or cracked part, if any, with a new one.

Specially inspect the damage of airbag module body, mounting bracket and harness connector.

- Driver side air bag module
- Passenger's airbag module
- Seat belt pretensioner (RH and LH)
- Front sub sensor (RH and LH)
- Instrument panel ASSY (because it is integrated with passenger's airbag module)
- Steering wheel
- Column ASSY - steering

(c) In case of no frontal collision

Visually inspect the airbag modules for damage or contamination and replace any faulty part with a new one.

(2) Passenger's airbag module

(a) In case of a frontal collision (passenger's airbag module activated)

1. Replace the following parts with new parts.
   - Airbag control module
   - Driver side air bag module
   - Passenger's airbag module
   - Side airbag module (if activated)
   - Curtain airbag module (RH and LH/if activated)
   - Seat belt pretensioner (RH and LH)
   - Front sub sensor (RH and LH)
   - Instrument panel ASSY (because it is integrated with passenger's airbag module)
   - Steering wheel
   - Column ASSY - steering
   - Roll connector
   - Pad ASSY - front seat backrest (if the side airbag has been activated)
   - Frame ASSY - front seat cushion (if the side air bag has been activated)
   - Frame ASSY - front seat backrest (if the side airbag has been activated)
   - Cover COMPL - front seat backrest (if the side airbag has been activated)
   - Trim panel - roof ASSY (if the curtain airbag has been activated)
   - Trim panel for each pillar (if the curtain airbag has been activated)
2. Visually inspect the following items, and replace a damaged part, if any, with a new one.
   - Universal joint ASSY - steering
   - Steering gear box
   - Beam COMPL - steering
   - Body side harness and connector connected to the replaced part
3. Inspect the following items, and replace a faulty part, if any, with a new one.
   - Power steering control module (Refer to PA - 3for the inspection method.)

(b) In case of a frontal collision (passenger's airbag module not activated)

Visually inspect the following items, and replace a damaged or cracked part, if any, with a new one.

Specially inspect the damage of airbag module body, mounting bracket and harness connector.

- Driver side air bag module
- Passenger's airbag module
- Seat belt pretensioner (RH and LH)
- Front sub sensor (RH and LH)
- Instrument panel ASSY (because it is integrated with passenger's airbag module)
- Steering wheel
- Column ASSY - steering

(c) In case of no frontal collision

Visually inspect the airbag modules for damage or contamination and replace any faulty part with a new one.

(3) Side airbag module

(a) In case of a side collision (side airbag module activated)

1. Replace the following parts with new parts.
   - Airbag control module
   - Satellite safing sensor

RS

– Front door impact sensor
– Seat belt pretensioner (impact side/if activated)
– Side airbag module (impact side)
– Side airbag sensor (impact side)
– Curtain airbag module (impact side)
– Curtain airbag sensor (impact side)
– Pad ASSY - front seat backrest (impact side)
– Frame ASSY - front seat cushion (impact side)
– Frame ASSY - front backrest (impact side)
– Cover COMPL - front backrest (impact side)
– Trim panel - roof ASSY (impact side)
– Trim panel for each pillar (impact side)

2. Visually inspect the following items, and replace a damaged part (impact side), if any, with a new one.
– Headrest ASSY
– Bushing - lock headrest
– Slide rail ASSY - OUT
– Slide rail ASSY - INN
– Cover - hinge front seat
– Knob - lifter
– Lever - reclining
– Side airbag harness and connector on body side

(b) In case of a side collision (side airbag module not activated)

Visually inspect the following items, and replace a damaged or cracked part, if any, with a new one.
Specially inspect the damage of airbag module body, mounting bracket and harness connector.

- Pad ASSY - front seat backrest
- Frame ASSY - front backrest
- Cover COMPL - front backrest
- Satellite safing sensor
- Front door impact sensor
- Side airbag module
- Side airbag sensor
- Curtain airbag module
- Curtain airbag sensor

(c) In case of no side collision

Visually inspect the airbag modules for contamination and replace any faulty part with a new one.

(4) Curtain airbag module

(a) In case of a side collision or overturn (curtain airbag module activated)

1. Replace the following parts with new parts.
– Airbag control module
– Satellite safing sensor
– Side airbag module (impact side)
– Curtain airbag module (impact side)
– Seat belt pretensioner (if activated)
– Front door impact sensor (impact side)
– Side airbag sensor (impact side)
– Curtain airbag sensor (impact side)
– Pad ASSY - front seat backrest (impact side)
– Frame ASSY - front seat cushion (impact side)
– Frame ASSY - front backrest (impact side)
– Cover COMPL - front backrest (impact side)
– Trim panel - roof ASSY (impact side)
– Trim panel for each pillar (impact side)

2. Visually inspect the following items, and replace a damaged part (impact side), if any, with a new one.
– Assist rail - front and rear
– Bracket - assist rail front and rear

– Body side harness and connector connected to the replaced part

(b) In case of a side collision (curtain airbag module not activated)

Visually inspect the following items, and replace a damaged or cracked part (impact side), if any, with a new one.
Specially inspect the damage of airbag module body, mounting bracket and harness connector.

- Trim panel - roof ASSY
- Trim panel for each pillar
- Curtain airbag module
- Satellite safing sensor
- Front door impact sensor
- Side airbag sensor
- Curtain airbag sensor

(c) In case of no side collision

Visually inspect the airbag cover for damage or contamination and replace any faulty part with a new one.

(5) Airbag control module

Check the following items and replace the damaged parts with new parts.

- Control module is cracked or deformed.
- Mounting bracket is cracked or deformed.
- Connector is scratched, cracked or deformed.
- Driver's airbag module has been activated.
- Knee airbag module has been activated.
- Passenger's airbag module has been activated.
- Side airbag module has been activated.
- Curtain airbag module has been activated.
- Seat belt pretensioner has been activated.

(6) Front sub sensor

If the front section of the vehicle is damaged, check the following items and replace the damaged parts with new parts.

- Front sub sensor is cracked or deformed.
- Connector is scratched, cracked or deformed.
- Driver's airbag module or passenger's airbag module has been activated.

(7) Front door impact sensor, satellite safing sensor, side airbag sensor & curtain airbag sensor

- Front door impact sensor, side airbag sensor, satellite safing sensor, sensor cover and curtain airbag sensor are cracked or deformed.
- Mounting bracket is cracked or deformed.
- Connector is scratched, cracked or deformed.
- Side airbag module or curtain airbag module has been activated. (operating side)

(8) Roll connector

Check the following items, and replace the damaged parts such as cracks, deformation, etc. with new parts.

- Combination switch
- Steering roll connector

(9) Check of steering system

Check the steering wheel, column ASSY - steering, universal joint ASSY - steering and steering gear box for the following items. If there is anything out of standard value, replace it with a new part because it may be damaged.

- Check the column ASSY - steering for the following items.
  — Steering wheel and the column ASSY - steering for mounting conditions, deformation, damage and looseness of front and rear, upward and downward directions.
  — Column ASSY - steering for looseness of front and rear, upward and downward directions and mounting conditions to the vehicle body (After a collision, absorbing part of the column ASSY - steering may have been operated).
  — Column ASSY - steering for damage of the connector and harness, and inspection of the power steering control unit
- Check the universal joint ASSY - steering for looseness and folding load.
- Check the steering gear box for the following items.
  — Rack for sliding resistance and looseness
  — Input shat for looseness
  — Gear box for rotational resistance

RS

(10) Passenger's seat

CAUTION:

If any of the following applies, replace the pad ASSY - front seat cushion and frame ASSY - front cushion as a unit. Do not disassemble.

– Frame ASSY - front cushion or pad ASSY - front seat cushion is cracked or deformed.
– The sensor mat of the occupant detection system or occupant detection control module and mounting bracket of the control module are damaged, cracked or deformed.
– Harness and/or connector is cracked, deformed or broken. Harness wire is exposed.

(a) Check the following items and replace the damaged parts with new parts.

- Body or bracket of the seat belt inner - front is scratched, cracked or deformed.
- Frame ASSY - front backrest is cracked or deformed.
- Headrest ASSY has deformation or play.
- If the cover - front cushion and the cover COMPL - front backrest is damaged or frayed, replace the cover with a new part.
- If the cover - front cushion and seat heater are replaced, replace the hanging-in wire of the cover with a new one.

(b) Check if the occupant detection system is working normally after removing or replacing the passenger's seat cover COMPL - front seat.

(c) Check if the passenger's seat belt buckle switch is working normally using the Subaru Select Monitor.

(11) Other parts to check

Check for the following parts, and replace the damaged parts with new parts.

(a) Check the following parts provided with a direct type connector for damage, and also check each harness for pinch and connector damage. Replace the main harness as a unit if damage is found.

- Driver side air bag module
- Curtain airbag module
- Pretensioner

(b) Check the seat cushion, backrest, slide rail and headrest for installation condition and looseness.

(c) If any break or fray is found in the cover COMPL - front backrest of the driver's seat or passenger's seat, the side airbag system may not operate properly. In this case, replace the cover COMPL - front backrest with a new part.

RS

Data monitor

Data list

Check the operation status of each sensor when the malfunction of the air bag system occurs or when replacing it.

1. Turn the ignition switch to OFF.
2. Connect the SSM4 to the DLC3.
3. Turn the ignition switch to ON.
4. Turn on the SSM4.
5. Select the following menu items: [Airbag] / [Data monitor]
   Support data is shown in the following table.

Item	Contents	Reference
Collective operation result	Collective operation result	-
Airbag ECU part number	Last 5 digits of ECM part number	-
B Pillar Sensor RH	Last 5 digits of sensor part number (ID)	-
B Pillar Sensor LH	Last 5 digits of sensor part number (ID)	-
C Pillar Sensor RH	Last 5 digits of sensor part number (ID)	-
C Pillar Sensor LH	Last 5 digits of sensor part number (ID)	-
RH electronic front sensor ID	Last 5 digits of sensor part number (ID)	-
LH electronic front sensor ID	Last 5 digits of sensor part number (ID)	-
RH Door sensor ID	Last 5 digits of sensor part number (ID)	-

Item	Contents	Reference
LH Door sensor ID	Last 5 digits of sensor part number (ID)	-
Passenger Classification	Occupant detection status	• No passenger (seats not occupied) • CRS • Occupied • Defined state of malfunction • Undefined
Status of RH buckle switch	Status of RH buckle switch	• When not buckled • When buckled • When indefinite or undefined
Identification Information on DTC display type.	Identification Information on DTC display type.	LR side type
Collision sensing signal	Output condition of collision detection signal	None
Rear floor sensor ID	Last 5 digits of sensor part number (ID)	-
Memory version	Information on the memory version	-
ECU Sensitivity	ECM sensitivity ID output	-
Passenger's airbag operation status	Passenger's airbag operation status	• ON • OFF
Illumination duration of warning light	Illumination duration of warning light	-
ECU ROM ID	ECU ROM ID	-
Total number of DTCs	Total number of DTCs	-
Trip counter	Time stamp information	-
Original counter identification information	Time stamp information	-
Time counter	Time stamp information	-

NOTE:
For detailed operation procedures, refer to "PC application help".

Event record data display

1. Operation
   (1) On the [Main Menu] display, select [Each System].
   (2) On the [Select System] display, select [Airbag].
   (3) On the [Airbag] menu display, select [Event Record Data]. Then, the [IMPORTANT NOTICE] display will appear.
   (4) Confirm the contents of the [IMPORTANT NOTICE] display, click on Yes for the checkbox.
   (5) If it is not illegal, click the "Yes" button to display the EDR data.

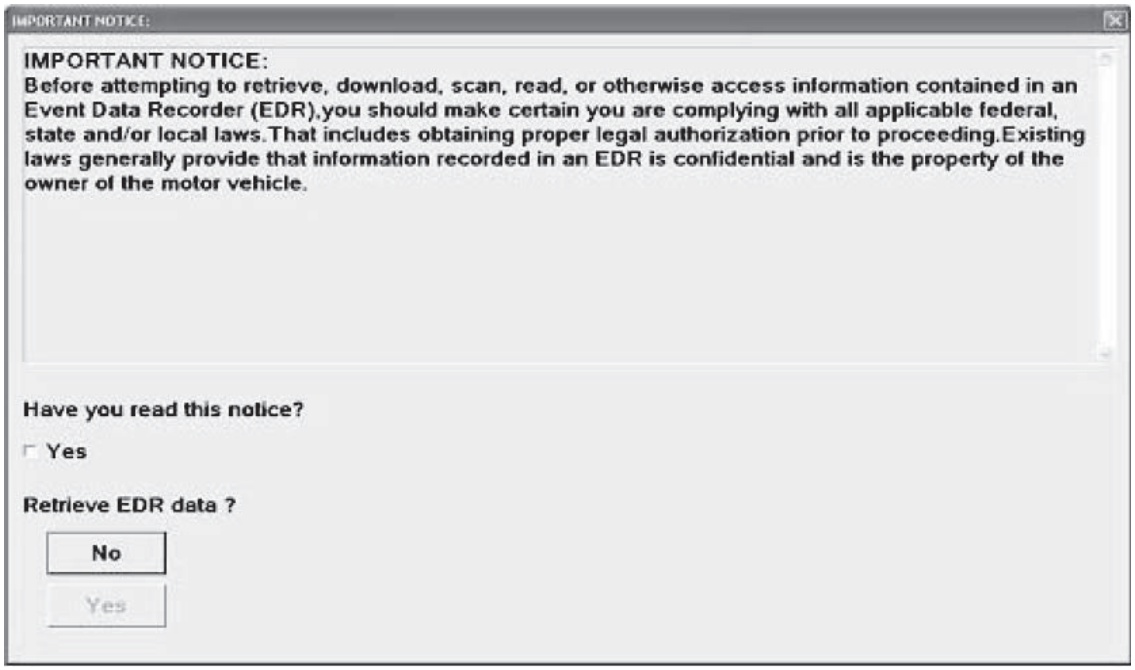

AB-03249

(6) Select the item to confirm from the event record data display.
(7) Select the record data to confirm.
(8) The selected record data will be displayed. If no data is recorded, [Event Record Data is not recorded] will be displayed.
(9) Select [Quit] to return to the event record data display.

RS

List of diagnostic codes

DTC	Item	Diagnosis contents	Reference pages
U0073	Control Module Communication Bus "A" Off	There is an error in the CAN communication.	RS - 54
B1000	Airbag ECM Malfunction	Airbag control module is faulty.	RS - 54
B11E0	Roll Firing Output	Curtain airbag module (LH/RH) and seat belt pretensioner (LH/RH) are activated.	RS - 54
B11F0	Disposal Process Complete	Collective operations for each airbag and pretensioner has been processed.	RS - 55
B11F1	Front Airbag: Firing output	Front airbag module and seat belt pretensioner (LH/RH) are activated.	RS - 55
B11F6	Side/Curtain Airbag: Firing output	• Side airbag module and curtain airbag module are activated. • Curtain airbag module is activated.	RS - 56
B1610	Front Sub Sensor RH Failure	Front sub sensor RH is faulty.	RS - 56
B1612	Front Sub Sensor RH Lost Communication	• Harness RH between airbag control module and front sub sensor is open or shorted. • Front sub sensor RH is faulty. • Airbag control module is faulty.	RS - 56
B1613	Front Sub Sensor RH Initialization Error		RS - 56
B1615	Front Sub Sensor LH Failure	Front sub sensor LH is faulty.	RS - 59
B1617	Front Sub Sensor LH Lost Communication	• Harness LH between airbag control module and front sub sensor is open or shorted. • Front sub sensor LH is faulty. • Airbag control module is faulty.	RS - 59
B1618	Front Sub Sensor LH Initialization Error		RS - 59
B16F1	Passenger's seat belt warning failure	• Passenger's seat belt warning failure. • Airbag control module is faulty. • Airbag main harness circuit is open, shorted, or shorted to ground.	RS - 65
B16F2	Front Sub Sensor RH Recognition Error	• Front sensor RH is installed incorrectly. • Airbag control module is faulty.	RS - 67
B16F3	Front Sub Sensor LH Recognition Error	• Front sensor LH is installed incorrectly. • Airbag control module is faulty.	RS - 68
B1620	Side Airbag Sensor RH Failure	Side airbag sensor RH is faulty.	RS - 68

DTC	Item	Diagnosis contents	Reference pages
B1622	Side Airbag Sensor RH Lost Communication	• Harness RH between airbag control module and side airbag sensor is open or shorted. • Side airbag sensor RH is faulty. • Airbag control module is faulty.	RS - 69
B1623	Side Airbag Sensor RH Initialization Error		RS - 69
B1625	Side Airbag Sensor LH Failure	Side airbag sensor LH is faulty.	RS - 72
B1627	Side Airbag Sensor LH Lost Communication	• Harness LH between airbag control module and side airbag sensor is open or shorted. • Side airbag sensor LH is faulty. • Airbag control module is faulty.	RS - 72
B1628	Side Airbag Sensor LH Initialization Error		RS - 72
B1630	Curtain Airbag Sensor RH Failure	Curtain airbag sensor RH is faulty.	RS - 76
B1632	Curtain Airbag Sensor RH Lost Communication	• Harness RH between airbag control module and curtain airbag sensor is open or shorted. • Side airbag sensor RH is faulty. • Curtain airbag sensor RH is faulty. • Airbag control module is faulty.	RS - 76
B1633	Curtain Airbag Sensor RH Initialization Error		RS - 76
B1635	Curtain Airbag Sensor LH Failure	Curtain airbag sensor LH is faulty.	RS - 80
B1637	Curtain Airbag Sensor LH Lost Communication	• Harness LH between airbag control module and curtain airbag sensor is open or shorted. • Side airbag sensor LH is faulty. • Curtain airbag sensor LH is faulty. • Airbag control module is faulty.	RS - 80
B1638	Curtain Airbag Sensor LH Initialization Error		RS - 80
B16F4	Side Airbag Sensor RH Recognition Error	• Side airbag sensor RH is installed incorrectly. • Airbag control module is faulty.	RS - 84
B16F5	Side Airbag Sensor LH Recognition Error	• Side airbag sensor LH is installed incorrectly. • Airbag control module is faulty.	RS - 84
B16F6	Curtain Airbag Sensor RH Recognition Error	• Curtain airbag sensor RH is installed incorrectly. • Airbag control module is faulty.	RS - 85
B16F7	Curtain Airbag Sensor LH Recognition Error	• Curtain airbag sensor LH is installed incorrectly. • Airbag control module is faulty.	RS - 85
B1642	Side Satellite Sensor Bus RH Lost Communication	• Harness RH between airbag control module and front door impact sensor is open or shorted. • Side airbag sensor RH is faulty. • Curtain airbag sensor RH is faulty. • Airbag control module is faulty.	RS - 86
B1647	Side Satellite Sensor Bus LH Lost Communication	• Harness LH between airbag control module and front door impact sensor is open or shorted. • Side airbag sensor LH is faulty. • Curtain airbag sensor LH is faulty. • Airbag control module is faulty.	RS - 93
B1650	Occupant classification system malfunction	• Occupant detection sensor is faulty. • Occupant detection control module is faulty. • Occupant detection harness is faulty. • Rear airbag harness RH is faulty. • A/B MAIN fuse (15 A) is blown.	
B1655	Front Buckle Switch RH Failure	• The buckle switch RH circuit is open, shorted, or short-circuited to ground. • Occupant detection system is faulty. • Occupant detection harness is faulty.	
B1660	Passenger's Airbag indicator failure	• Passenger's airbag indicator is faulty. • Airbag control module is faulty. • Airbag main harness circuit is open, shorted, or shorted to ground. • Body harness is shorted.	RS - 100
B1675	Satellite Safing Sensor Failure	Satellite safing sensor is faulty.	RS - 104
B1678	Lost Communication With Satellite Safing Sensor	• Harness between airbag control module and satellite safing sensor is open or shorted. • Satellite safing sensor is faulty. • Airbag control module is faulty.	RS - 105
B1679	Satellite Safing Sensor Initialization Incomplete		RS - 105
B16F8	Satellite Safing Sensor Recognition Error	• Satellite safing sensor is installed incorrectly. • Airbag control module is faulty.	RS - 108
B16F9	Door Sensor RH Recognition Error	• Door sensor RH is installed incorrectly. • Airbag control module is faulty.	RS - 108
B1690	Door Sensor RH Failure	Door sensor RH is faulty.	RS - 109

DTC	Item	Diagnosis contents	Reference pages
B1692	Lost Communication With Door Sensor RH	• Harness between airbag control module and door sensor RH is open or shorted.	RS - 109
B1693	Door Sensor RH Initialization Incomplete	• Side airbag sensor RH is faulty. • Curtain airbag sensor RH is faulty. • Door sensor RH is faulty. • Airbag control module is faulty.	RS - 109
B16FA	Door Sensor LH Recognition Error	• Door sensor LH is installed incorrectly. • Airbag control module is faulty.	RS - 113
B1695	Door sensor LH failure	Door sensor LH is faulty.	RS - 114
B1697	Lost Communication With Door Sensor LH	• Harness between airbag control module and door sensor LH is open or shorted.	RS - 114
B1698	Door Sensor LH Initialization Incomplete	• Side airbag sensor LH is faulty. • Curtain airbag sensor LH is faulty. • Door sensor LH is faulty. • Airbag control module is faulty.	RS - 114
B161A	Lost Communication with Front Satellite Sensor Bus	• Harness between airbag control module and front sub sensor is open or shorted. • Front sub sensor is faulty. • Airbag control module is faulty.	RS - 62
B1800	Short in Driver's Airbag	• Airbag main harness circuit is shorted. • Airbag module harness (driver's side) circuit is shorted. • Roll connector circuit is shorted. • Driver's airbag module is faulty. • Airbag control module is faulty.	RS - 119
B1801	Open in Driver's Airbag	• Airbag main harness circuit is open. • Airbag module harness (driver's side) circuit is open. • Roll connector circuit is open. • Driver's airbag module is faulty. • Airbag control module is faulty.	RS - 121
B1802	Short in Driver's Airbag (to Ground)	• Airbag main harness circuit is shorted to ground. • Airbag module harness (driver's side) circuit is shorted to ground. • Roll connector circuit is shorted to ground. • Driver's airbag module is faulty. • Airbag control module is faulty.	RS - 124
B1803	Short in Driver's Airbag (to +B)	• Airbag main harness circuit is shorted to power supply. • Airbag module harness (driver's side) circuit is shorted to power supply. • Roll connector circuit is shorted to power supply. • Airbag module is faulty. • Airbag control module is faulty.	RS - 127
B1805	Short in Passenger's Airbag	• Airbag main harness circuit is shorted. • Airbag module harness (passenger's side) circuit is shorted. • Passenger's airbag module is faulty. • Airbag control module is faulty.	RS - 130
B1806	Open in Passenger's Airbag	• Airbag main harness circuit is open. • Airbag module harness (passenger's side) circuit is open. • Passenger's airbag module is faulty. • Airbag control module is faulty.	RS - 133
B1807	Short in Passenger's Airbag (to Ground)	• Airbag main harness circuit is shorted to ground. • Airbag module harness (passenger's side) circuit is shorted to ground. • Passenger's airbag module is faulty. • Airbag control module is faulty.	RS - 136
B1808	Short in passenger's airbag (to +B)	• Airbag main harness circuit is shorted to power supply. • Airbag module harness (passenger's side) circuit is shorted to power supply. • Passenger's airbag module is faulty. • Airbag control module is faulty.	RS - 138
B1810	Short in Driver's Airbag Dual Stage - 2nd Step	• Airbag main harness circuit is shorted. • Airbag module harness (driver's side) circuit is shorted. • Roll connector circuit is shorted. • Driver's airbag module is faulty. • Airbag control module is faulty.	RS - 141
B1811	Open in driver's airbag dual stage - 2nd step	• Airbag main harness circuit is open. • Airbag module harness (driver's side) circuit is open. • Roll connector circuit is open. • Driver's airbag module is faulty. • Airbag control module is faulty.	RS - 144

DTC	Item	Diagnosis contents	Reference pages
B1812	Short in driver's airbag dual stage - 2nd step (to ground)	• Airbag main harness circuit is shorted to ground. • Airbag module harness (driver's side) circuit is shorted to ground. • Roll connector circuit is shorted to ground. • Driver's airbag module is faulty. • Airbag control module is faulty.	RS - 147
B1813	Short in driver's airbag dual stage - 2nd step circuit (to +B)	• Airbag main harness circuit is shorted to power supply. • Airbag module harness (driver's side) circuit is shorted to power supply. • Roll connector circuit is shorted to power supply. • Airbag module is faulty. • Airbag control module is faulty.	RS - 150
B1815	Short in passenger's airbag dual stage - 2nd step	• Airbag main harness circuit is shorted. • Airbag module harness (passenger's side) circuit is shorted. • Passenger's airbag module is faulty. • Airbag control module is faulty.	RS - 153
B1816	Open in passenger's airbag dual stage - 2nd step	• Airbag main harness circuit is open. • Airbag module harness (passenger's side) circuit is open. • Passenger's airbag module is faulty. • Airbag control module is faulty.	RS - 156
B1817	Short in passenger's airbag dual stage - 2nd step (to ground)	• Airbag main harness circuit is shorted to ground. • Airbag module harness (passenger's side) circuit is shorted to ground. • Passenger's airbag module is faulty. • Airbag control module is faulty.	RS - 159
B1818	Short in passenger's airbag dual stage - 2nd step circuit (to +B)	• Airbag main harness circuit is shorted to power supply. • Airbag module harness (passenger's side) circuit is shorted to power supply. • Passenger's airbag module is faulty. • Airbag control module is faulty.	RS - 162
B1820	Short in side airbag RH	• Side airbag harness RH circuit is shorted. • Side airbag module RH is faulty. • Airbag control module is faulty.	RS - 165
B1821	Open in side airbag RH	• Side airbag harness RH circuit is open. • Side airbag module RH is faulty. • Airbag control module is faulty.	RS - 168
B1822	Short in side airbag RH (to ground)	• Side airbag harness RH circuit is shorted to ground. • Side airbag module RH is faulty. • Airbag control module is faulty.	RS - 171
B1823	Short in side airbag RH (to +B)	• Side airbag harness RH circuit is shorted to power supply. • Side airbag module RH is faulty. • Airbag control module is faulty.	RS - 174
B1825	Short in side airbag LH	• Side airbag harness LH circuit is shorted. • Side airbag module LH is faulty. • Airbag control module is faulty.	RS - 177
B1826	Open in side airbag LH	• Side airbag harness LH circuit is open. • Side airbag module LH is faulty. • Airbag control module is faulty.	RS - 180
B1827	Short in side airbag LH (to ground)	• Side airbag harness LH circuit is shorted to ground. • Side airbag module LH is faulty. • Airbag control module is faulty.	RS - 183
B1828	Short in Side Airbag LH (to +B)	• Side airbag harness LH circuit is shorted to power supply. • Side airbag module LH is faulty. • Airbag control module is faulty.	RS - 186
B1830	Short in curtain airbag RH squib circuit	• Curtain airbag harness RH circuit is shorted. • Curtain airbag module RH is faulty. • Airbag control module is faulty.	RS - 189
B1831	Open in curtain airbag RH squib circuit	• Curtain airbag harness RH circuit is open. • Curtain airbag module RH is faulty. • Airbag control module is faulty.	RS - 192
B1832	Short in curtain airbag RH squib circuit (to ground)	• Curtain airbag harness RH circuit is shorted to ground. • Side airbag module RH is faulty. • Airbag control module is faulty.	RS - 194
B1833	Short in curtain airbag RH squib circuit (to +B)	• Curtain airbag harness RH is shorted to power supply. • Curtain airbag module RH is faulty. • Airbag control module is faulty.	RS - 196

DTC	Item	Diagnosis contents	Reference pages
B1835	Short in curtain airbag LH squib circuit	• Curtain airbag harness LH circuit is shorted. • Curtain airbag module LH is faulty. • Airbag control module is faulty.	RS - 199
B1836	Open in curtain airbag LH squib circuit	• Curtain airbag harness LH circuit is open. • Curtain airbag module LH is faulty. • Airbag control module is faulty.	RS - 201
B1837	Short in curtain airbag LH squib circuit (to ground)	• Curtain airbag harness LH circuit is shorted to ground. • Curtain airbag module LH is faulty. • Airbag control module is faulty.	RS - 203
B1838	Short in curtain airbag LH squib circuit (to +B)	• Curtain airbag harness LH is shorted to power supply. • Curtain airbag module LH is faulty. • Airbag control module is faulty.	RS - 205
B1900	Short in front P/T RH	• Seat belt pretensioner RH circuit is shorted. • Pretensioner RH is faulty. • Pretensioner harness RH is shorted. • Airbag control module is faulty.	RS - 208
B1901	Open in front P/T RH	• Seat belt pretensioner RH circuit is open. • Pretensioner RH is faulty. • Pretensioner harness RH is shorted. • Airbag control module is faulty.	RS - 210
B1902	Short in front P/T RH (to ground)	• Seat belt pretensioner RH circuit is shorted to ground. • Pretensioner RH is faulty. • Pretensioner harness RH is shorted. • Airbag control module is faulty.	RS - 212
B1903	Short in front P/T RH (to +B)	• Seat belt pretensioner RH circuit is shorted to power supply. • Pretensioner RH is faulty. • Pretensioner harness RH is shorted. • Airbag control module is faulty.	RS - 215
B1905	Short in front P/T LH	• Seat belt pretensioner LH circuit is shorted. • Pretensioner LH is faulty. • Pretensioner harness LH is shorted. • Airbag control module is faulty.	RS - 217
B1906	Open in front P/T LH	• Seat belt pretensioner LH circuit is open. • Pretensioner LH is faulty. • Pretensioner harness LH is shorted. • Airbag control module is faulty.	RS - 219
B1907	Short in front P/T LH (to ground)	• Seat belt pretensioner LH circuit is shorted to ground. • Pretensioner LH is faulty. • Pretensioner harness LH is shorted. • Airbag control module is faulty.	RS - 222
B1908	Short in front P/T LH (to +B)	• Seat belt pretensioner LH circuit is shorted to power supply. • Pretensioner LH is faulty. • Pretensioner harness LH is shorted. • Airbag control module is faulty.	RS - 224

RS

How to troubleshoot

1	Bring in the car

Next

2	Interview and phenomenon check

(Refer to RS - 50)

Next

3	Inspection of CAN communication system

(1) Check CAN communication system. (Refer to NW - 30)

Result

Result	Go to
Functioning properly	A
Not functioning properly	B

B → To CAN communication system (Refer to NW - 30)

A

4	DTC check

(1) Using the SSM4, check the DTC. (Refer to RS - 51)
   (a) Record the diagnostic codes.

Result

Result	Go to
A DTC is output.	A
No diagnostic code is output.	B

NOTE:
When a DTC is output, refer to “List of diagnostic codes (RS - 40)”.

B → Go to Step 8.

A

5	Circuit check

Next

6	Clear diagnostic code

(Refer to RS - 51)

Next

7	Checking diagnostic codes

(1) Using the SSM4, check the DTC. (Refer to RS - 51)
   (a) Record the diagnostic codes.

Result

Result	Go to
No diagnostic code is output.	A
A DTC is output.	B

B → Go to Step 9.

RS

A

8	Reproduction procedure

(Refer to IN - 32)

Next

9	Confirming the problem

Next

10	Replacement and repair

Next

11	Confirmation test

Next

Complete

RS

Subaru Select Monitor

Operation

For detailed operation procedures, refer to "PC application help".

Communication for initializing is not possible

Perform inspection when communication between the airbag control module and the Subaru Select Monitor is not possible

Circuit figure

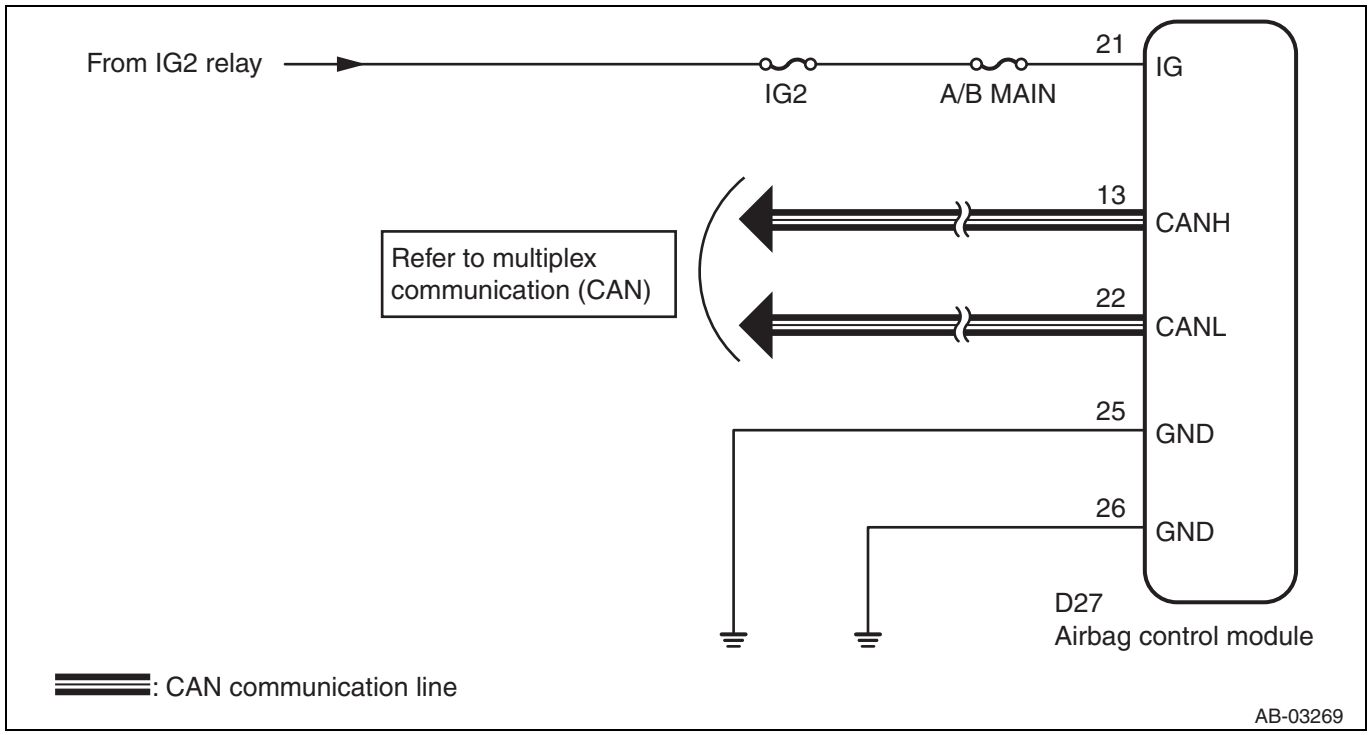

Inspection steps

CAUTION:

Before performing the diagnosis, refer to the precautions.

RS

1	Check of ignition switch

(1) Check the ignition switch
Criteria: Ignition switch ON

NG → Turn the ignition switch to ON and use the Subaru Select Monitor to select the airbag mode.

OK

2	Battery check

(1) Turn the ignition switch to OFF.
(2) Measure the battery voltage.
Criteria: The voltage is 11 V or more

NG → Charge or replace the battery.

OK

3	Check of battery terminal

(1) Check the battery terminal.
Criteria: No fault is found.

NG → Replace or tighten the battery terminal.

OK

4	Communication check of Subaru Select Monitor

(1) Turn the ignition switch to ON.
(2) Use the Subaru Select Monitor to check that it communicates with other systems properly.
Criteria: Communication with other systems is performed properly.

NG → Go to Step 5.

OK

5	Check of Subaru Select Monitor

(1) Check that the Subaru Select Monitor is powered on.
Criteria: No fault is found.

NG → Go to Step 6.

OK

6	Fuse check

Criteria: No fault is present in the data link connector fuse OBD (7.5 A) and ECM IG2 (10 A)

NG → Replace the fuse. When the fuse is blown again, check the power circuit.

OK

Repair the harness between the battery and the data link connector.

7	Check of airbag control module connector

(1) Turn the ignition switch to OFF, disconnect the battery ground terminal, and wait for 60 seconds or more.
(2) Check that the airbag control module connector (D27, G19, H32) is securely connected.
Criteria: No fault is found.

NG → Reconnect the airbag control module connector.

OK

8	Communication check of Subaru Select Monitor

(1) Disconnect the airbag control module connector.
(2) Connect the battery ground terminal.
(3) Turn the ignition switch to ON.
(4) Check that communication with other systems is performed properly.
Criteria: Communication with other systems is performed properly.

NG → Go to Step 9.

OK

Replace the airbag control module.

9	Fuse check

Criteria: No fault is present in the A/B MAIN fuse (15 A)

NG → Replace the fuse. When the fuse is blown again, check the power circuit.

OK

10	Check of airbag control module connector

(1) Turn the ignition switch to OFF, disconnect the battery ground terminal, and wait for 60 seconds or more.
(2) Check that the airbag control module connector (D27, G19, H32) is securely connected.
Criteria: No fault is found.

NG → Reconnect the airbag control module connector.

OK

11	CAN communication check

(1) Check CAN communication system. (Refer to NW - 30)
Criteria: No fault is found.

NG → Repair it according to the check by the CAN communication system.

OK

12	Check of power circuit

(1) Disconnect the connector (D27, G19, H32) from the airbag control module.
(2) Connect the connector (1AG) in the test harness AG to the connector (D27, G19, H32).
(3) Turn the ignition switch to ON.
(4) Measure the voltage between the connector (2AG) in the test harness AG and the chassis ground.

Voltage

Inspection terminals	Inspection conditions	Standard value
(2AG) No. 1 (+) - chassis ground (-)	Always	10 V or more

NG → Repair the harness between the airbag control module and the battery. Or replace the airbag main harness along with the bulkhead harness.

OK

13	Check of resistance between airbag control module and chassis ground

(1) Turn the ignition switch to OFF.
(2) Measure the resistance between the connector (2AG) in the test harness AG and the chassis ground.

Resistance

Inspection terminals	Inspection conditions	Standard value
(2AG) No. 4 - chassis ground:	Always	Less than 10 Ω
(2AG) No. 3 - chassis ground:	Always	Less than 10 Ω

NG → Repair the harness between the airbag control module and the chassis ground. Or replace the airbag main harness along with the bulkhead harness.

OK

RS

14	Check of connector connection failure

(1) Check for poor contact of the control module power supply, the ground line, and the data link connector.
Criteria: No fault is found.

NG → Repair the connector. (Regarding the airbag system connector, be sure to replace the connector with the harness, not repair.)

OK

Replace the airbag control module.

Check list for interview

Customer's name		Inspector's name	
Vehicle bringing date	/ /	Registration No.	
Odometer readout	km miles	Frame number	
Trouble occurrence date	/ /	Registration year	/ /
Weather	• Clear • Cloudy • Rainy • Snowy • Other:		
Temperature	°C (°F)		

Road condition	• Flat road • Uphill • Downhill • Unpaved road • Other:
Vehicle operation	• Start • Idling • Driving ·Constant speed ·Accelerating ·Decelerating ·Turning ·Other:
Details of trouble	
Behavior of the airbag warning light	• Normal (When turning the ignition switch to ON, the light illuminates for approx. 6 seconds, then goes off.) • The light is stuck on. • The light does not illuminate.
DTC output	Normal code DTC: (code:)

Checking / clearing diagnostic codes

1. Reading diagnostic codes with the SSM4
   (1) Connect the SSM4 to data link connector.
   (2) Turn the ignition switch to ON.
   (3) Select the following menu items using the SSM4. : [Each System] / [Airbag] / [DTC]

NOTE:

For details on the DTCs, refer to "List of diagnostic codes".

2. Clearing diagnostic codes with the SSM4
   (1) Connect the SSM4 to data link connector.
   (2) Turn the ignition switch to ON.
   (3) Select the following menu items using the SSM4. : [Each System] / [Airbag] / [Clear Memory]

NOTE:

After repairing the airbag system, clear the failure codes recorded in the airbag control module.

3. Check mode
   Refer to the trouble situation on the interview check list to reproduce the same situation.

ECM terminal arrangement

1. Airbag ECM terminal arrangement

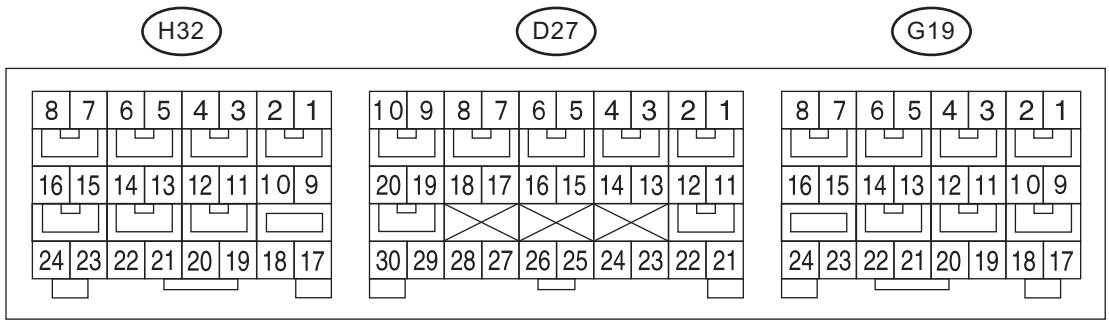

AB-10203

- Terminal numbers in airbag control module connector are shown in the figure.
- The airbag warning light illuminates when the connector is removed from the airbag control module.

Item		Terminal No.
Ignition power supply	Dedicated fuse	D27 - 21
Passenger's airbag module - 1st step	+	D27 - 4
	-	D27 - 3
Passenger's airbag module - 2nd step	+	D27 - 1
	-	D27 - 2
Driver's airbag module - 1st step	+	D27 - 5
	-	D27 - 6
Driver's airbag module - 2nd step	+	D27 - 8
	-	D27 - 7
CAN-H		D27 - 13
CAN-L		D27 - 22
Front sub sensor LH	+	D27 - 30
	-	D27 - 28
Front sub sensor RH	+	D27 - 29
	-	D27 - 27
Ground line (GND)		D27 - 25
		D27 - 26
Passenger's airbag OFF indicator		D27 - 17
Passenger's airbag ON indicator		D27 - 23
Passenger's seat belt warning		D27 - 15
Side airbag sensor LH Curtain airbag sensor LH Front door impact sensor LH	+	H32 - 24
	-	H32 - 23
Side airbag module LH	+	H32 - 1
	-	H32 - 2
Curtain airbag module LH	+	H32 - 4
	-	H32 - 3
Seat belt pretensioner LH	+	H32 - 5
	-	H32 - 6
Satellite safing sensor	+	H32 - 20
	-	H32 - 19
Seat belt pretensioner RH	+	G19 - 4
	-	G19 - 3
Side airbag sensor RH Curtain airbag sensor RH Front door impact sensor RH	+	G19 - 17
	-	G19 - 18
Side airbag module RH	+	G19 - 8
	-	G19 - 7
Curtain airbag module RH	+	G19 - 5
	-	G19 - 6
Occupant detection control module	+	G19 - 16
	-	G19 - 24

Wiring diagram

Refer to wiring diagram.

Airbag warning light illumination pattern

1. Inspection

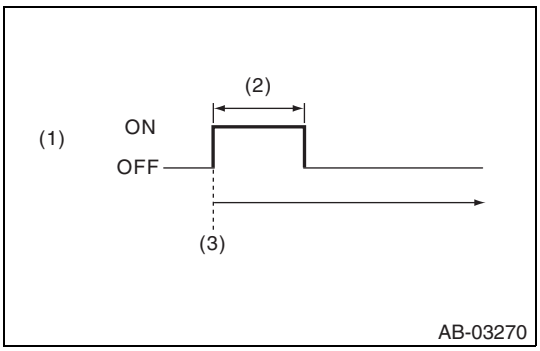

(1) Turn the ignition switch to ON. Confirm that the airbag warning light turns on and remains on for approx. 6 seconds, and then turns off even though the switch is still set to ON.

Captions in illustration

*1	Airbag warning light
*2	For Approx. 6 seconds
*3	Ignition switch ON

Airbag warning light remains ON / Airbag warning light remains OFF

Faulty part

- Airbag warning light is faulty.
- Circuit between airbag control module and combination meter is shorted or open.
- Grounding circuit is faulty.
- Airbag control module is faulty.
- Connector connection is improper.
- Connection of airbag control module connector (D27, G19, H32) is improper.

RS

Inspection steps

CAUTION:

Before performing the diagnosis, refer to the precautions.

1	CAN communication system check

(1) Check CAN communication system. (Refer to NW - 30)
Criteria: No fault is found.

NG → Repair it according to the diagnosis by the CAN communication system.

OK

2	Connector check

(1) Turn the ignition switch to OFF, disconnect the battery ground terminal, and wait for 60 seconds or more.
(2) Check the connection status of airbag CM connector.
Criteria: No fault is found.

NG → Repair the connector.

OK

3	Combination meter check

(1) Check the combination meter.
Criteria: No fault is found.

NG → Repair or replace the combination meter.

OK

Replace the airbag CM.

DTC	U0073	Control Module Communication Bus "A" off

Circuit description

DTC No.	DTC detected item	Faulty part
U0073	An error occurs in the CAN line.	CAN communication system

Inspection steps
Check CAN communication system. (Refer to NW - 30)

DTC	B1000	Airbag ECM Malfunction

Circuit description

DTC No.	DTC detected item	Faulty part
B1000	Airbag control module is faulty.	Airbag control module

RS

Inspection steps
CAUTION:
Before performing the diagnosis, refer to the precautions. (Refer to NW - 30)

1	DTC check

(1) Read the DTC.
Criteria: B1000 is output.

NG → Clear the memory.

OK

Replace the airbag control module.

DTC	B11E0	Roll Firing Output

Circuit description

DTC No.	DTC detected item	Faulty part
B11E0	Curtain airbag module (LH/RH) and seat belt pretensioner (LH/RH) are activated.	• Airbag control module • Curtain airbag module of both sides • Front outer seat belt with pretensioner of both sides

Inspection steps
Once this DTC is displayed, the memory cannot be cleared. Therefore replace the following parts.

- Airbag control module
- Curtain airbag module of both sides
- Front outer seat belt with pretensioner of both sides

DTC	B11F0	Deployment Disposal Process Complete

Circuit description

Deployment command signal is sent to the airbag control module by the collective operation tool for processing airbag deployment disposal. When the airbag installed in the vehicle is deployed, the corresponding DTC is recorded in the airbag control module. If this DTC is recorded, immediately replace the airbag control module with a new one.

DTC No.	DTC detected item	Faulty part
B11F0	Airbag control module disposal has been processed.	Airbag control module

Inspection steps

CAUTION:

Before performing the diagnosis, refer to the precautions.

1	Check DTC

(1) Read the DTC.

Criteria: B11F0 is output.

NG → Complete

OK

Replace the airbag control module.

DTC	B11F1	Front Airbag: Firing output

Circuit description

DTC No.	DTC detected item	Faulty part
B11F1	Front airbag module and seat belt pretensioner (LH/RH) are activated.	• Airbag control module • Driver side air bag module • Passenger's airbag module • Front sub sensor of both sides • Front outer seat belt with pretensioner of both sides • Steering roll connector

Inspection steps

Once this DTC is displayed, the memory cannot be cleared. Therefore replace the following parts.

- Airbag control module
- Driver side air bag module
- Passenger's airbag module
- Front sub sensor of both sides
- Front outer seat belt with pretensioner of both sides
- Steering roll connector

DTC	B11F6	Side/Curtain Airbag: Firing output

Circuit description

DTC No.	DTC detected item	Faulty part
B11F6	• Side airbag module and curtain airbag module are activated. • Curtain airbag module is activated.	• Airbag control module • Side airbag module (operating side) • Side airbag sensor (operating side) • Curtain airbag module (operating side) • Curtain airbag sensor (operating side) • Satellite safing sensor • Front door impact sensor (operating side)

Inspection steps

Once this DTC is displayed, the memory cannot be cleared. Therefore replace the following parts.

- Airbag control module
- Side airbag module (operating side)
- Side airbag sensor (operating side)
- Curtain airbag module (operating side)
- Curtain airbag sensor (operating side)
- Satellite safing sensor
- Front door impact sensor (operating side)

RS

DTC	B1610	Front Sub Sensor RH Failure

Circuit description

DTC No.	DTC detected item	Faulty part
B1610	Front sub sensor RH is faulty.	Front sub sensor RH

Inspection steps

The circuit within the front sub sensor RH is faulty. Replace the front sub sensor RH.

DTC	B1612	Front Sub Sensor RH Lost Communication

DTC	B1613	Front Sub Sensor RH Initialization Error

Circuit description

DTC No.	DTC detected item	Faulty part
B1612 B1613	• Open or short circuit in harness of front sensor bus RH. • Front sub sensor RH is faulty. • Airbag control module is faulty.	• Front sub sensor RH • Airbag control module • Airbag main harness

Circuit figure

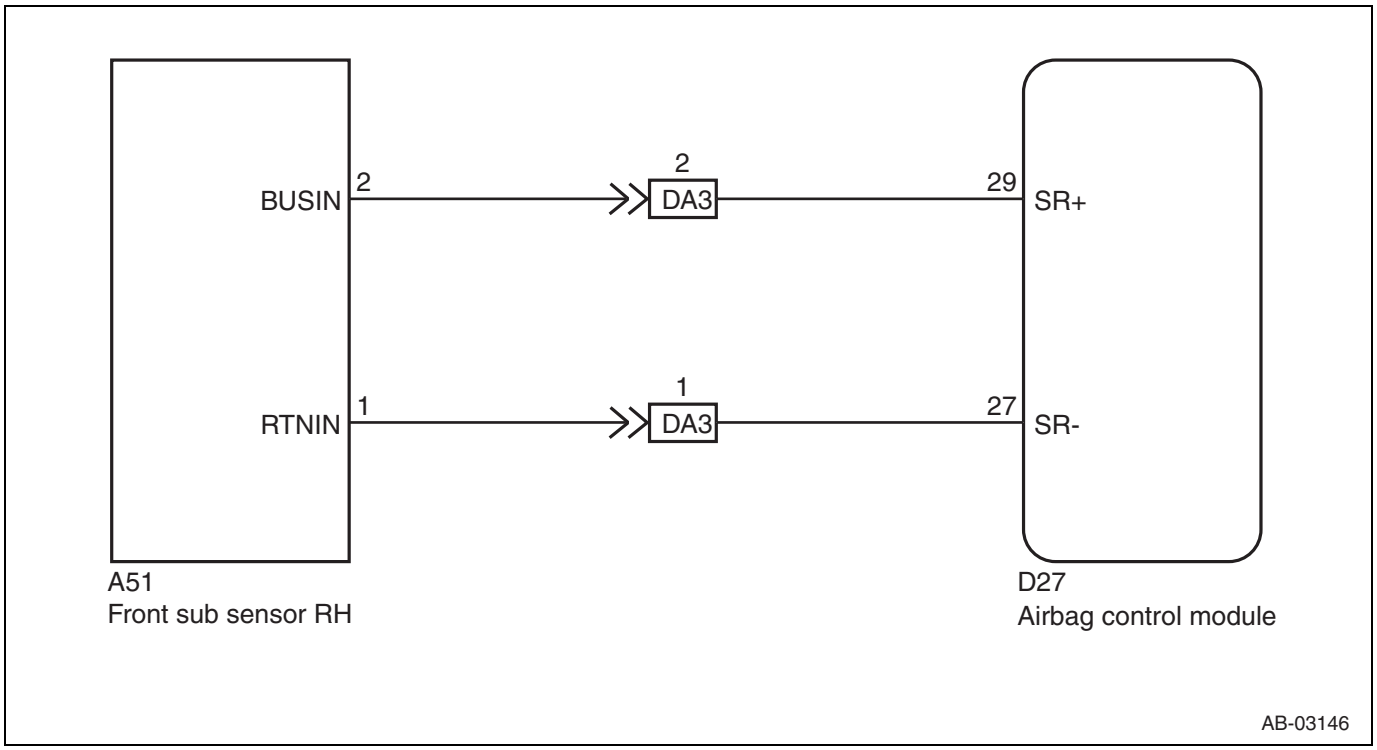

Inspection steps

CAUTION:

Before performing the diagnosis, refer to the precautions.

RS

1	Check poor contact of connectors.

(1) Check for poor contact of the connectors between the airbag control module and the front sub sensor RH.

Criteria: No fault is found.

NG → Replace the airbag main harness along with the body harness.

OK

2	Check airbag main harness (front sensor bus RH).

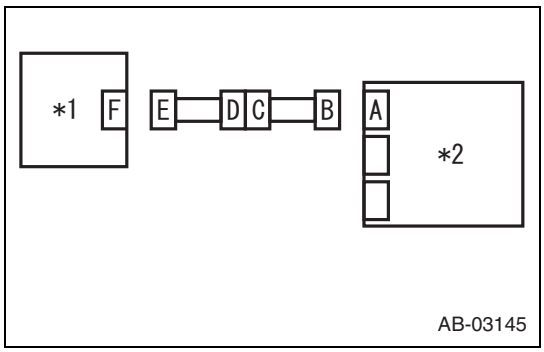

(1) Turn the ignition switch to OFF, disconnect the battery ground terminal, and wait for 60 seconds or more.
(2) Remove the column cover and disconnect the connector (D52).
(3) Disconnect the passenger's airbag module connector (D30).
(4) Disconnect the connector (D27, G19, H32) of the airbag control module.
(5) Connect the connector (1AG) in the test harness AG to the connector B.
(6) Connect the connector 1H in the test harness H to the connector E.
(7) Measure the resistance between the terminals.

Resistance

Inspection terminals	Inspection conditions	Standard value
(4AG) No. 14 - (3H) No. 5	Always	Less than 10 Ω
(4AG) No. 12 - (3H) No. 6	Always	Less than 10 Ω

Captions in illustration

*1	Front sub sensor RH
*2	Airbag control module

NG → Replace the airbag main harness along with the body harness.

OK

3	Check airbag main harness (front sensor bus RH).

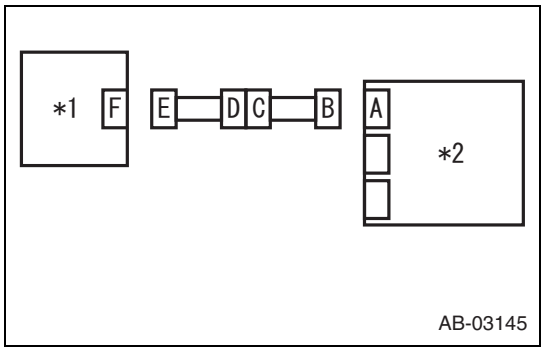

(1) Measure the resistance between the terminals.

Resistance

Inspection terminals	Inspection conditions	Standard value
(4AG) No. 12 - chassis ground	Always	1 MΩ or more
(4AG) No. 14 - chassis ground	Always	1 MΩ or more
(4AG) No. 12 - (4AG) No. 14	Always	1 MΩ or more

Captions in illustration

*1	Front sub sensor RH
*2	Airbag control module

NG → Replace the airbag main harness along with the body harness.

OK

4	Check airbag control module.

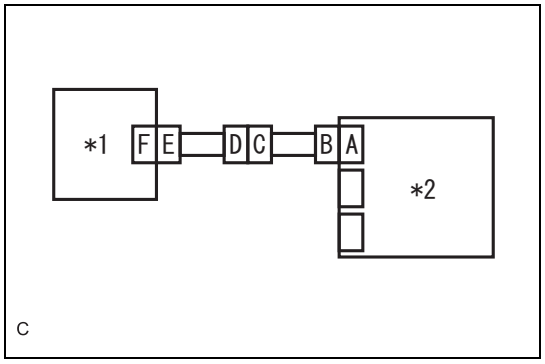

(1) Connect all connectors.
(2) Clear the memory.
(3) Perform the reproduction procedure.
(4) Read the DTC. (Current malfunction)
Criteria: DTC B1613 is not displayed.

Captions in illustration

*1	Front sub sensor RH
*2	Airbag control module

NG → Replace the front sub sensor RH. Replace the airbag control module if it does not operate properly even after replacing the sensor.

OK

5	Check DTC

Criteria: No other DTC is displayed.

NG → Perform diagnosis for the displayed DTC.

OK

Complete

DTC	B1615	Front Sub Sensor LH Failure

Circuit description

DTC No.	DTC detected item	Faulty part
B1615	Front sub sensor LH is faulty.	Front sub sensor LH

Inspection steps

The circuit within the front sub sensor RH is faulty. Replace the front sub sensor RH.

DTC	B1617	Front Sub Sensor LH Lost Communication

DTC	B1618	Front Sub Sensor LH Initialization Error

RS

Circuit description

DTC No.	DTC detected item	Faulty part
B1617 B1618	• Open or short circuit in harness of front sensor bus LH. • Front sub sensor LH is faulty. • Airbag control module is faulty.	• Front sub sensor LH • Airbag control module • Airbag main harness

Circuit figure

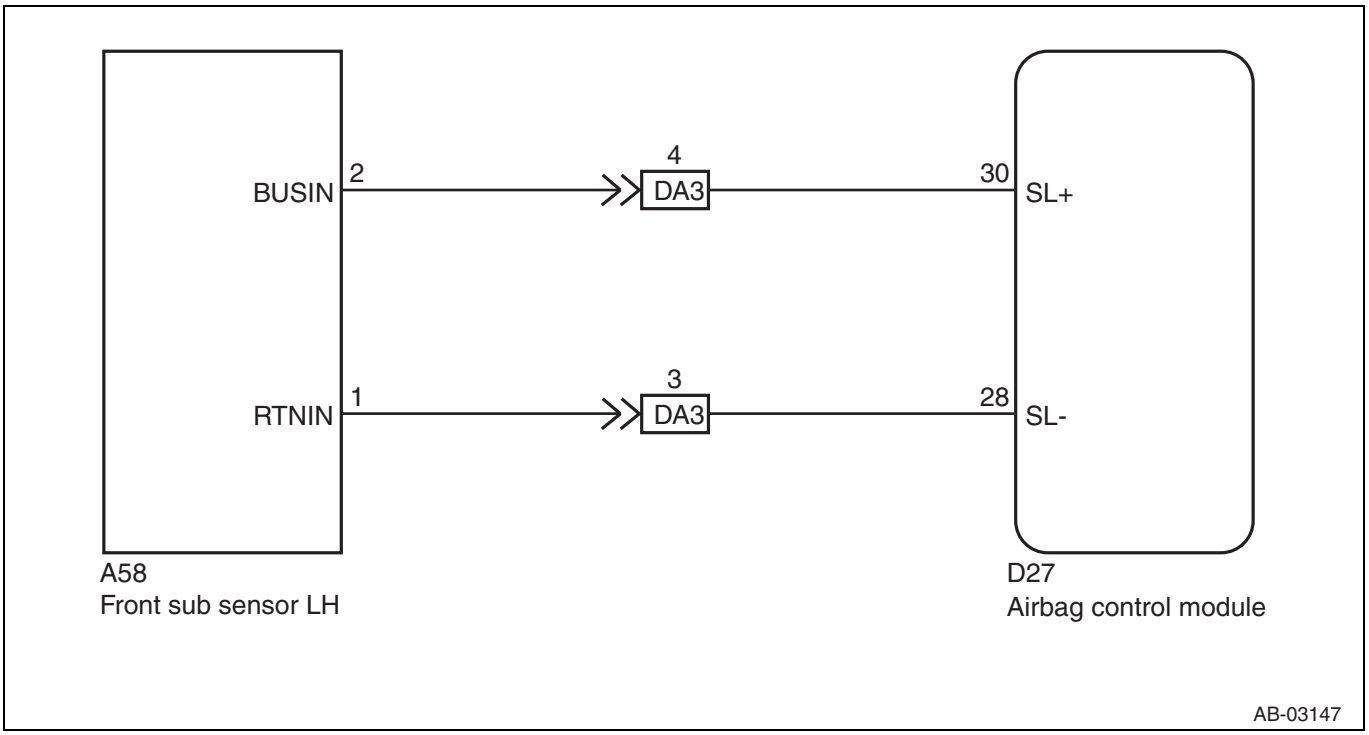

Inspection steps

CAUTION:

Before performing the diagnosis, refer to the precautions.

RS

1	Check poor contact of connectors.

(1) Check for poor contact of the connectors between the airbag control module and the front sub sensor LH.

Criteria: No fault is found.

NG → Replace the airbag main harness along with the body harness.

OK

2	Check airbag main harness (front sensor bus LH).

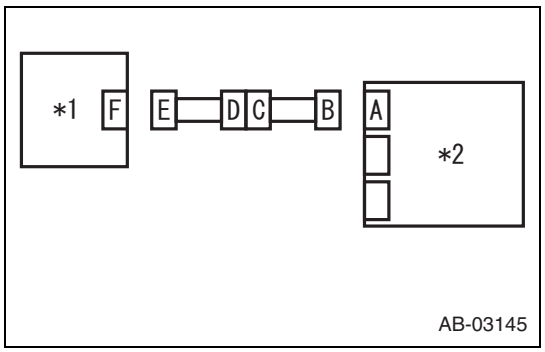

(1) Turn the ignition switch to OFF, disconnect the battery ground terminal, and wait for 60 seconds or more.
(2) Remove the column cover and disconnect the connector (D52).
(3) Disconnect the passenger's airbag module connector (D30).
(4) Disconnect the connector (D27, G19, H32) of the airbag control module.
(5) Connect the connector (1AG) in the test harness AG to the connector B.
(6) Connect the connector 1H in the test harness H to the connector E.
(7) Measure the resistance between the terminals.

Resistance

Inspection terminals	Inspection conditions	Standard value
(4AG) No. 7 - (3H) No. 5	Always	Less than 10 Ω

Inspection terminals	Inspection conditions	Standard value
(4AG) No. 9 - (3H) No. 6	Always	Less than 10 Ω

Captions in illustration

*1	Front sub sensor LH
*2	Airbag control module

NG → Replace the airbag main harness along with the body harness.

OK

3	Check airbag main harness (front sensor bus LH).

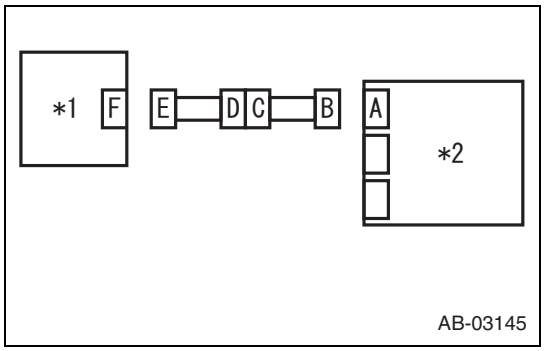

(1) Measure the resistance between the terminals.

Resistance

Inspection terminals	Inspection conditions	Standard value
(4AG) No. 7 - chassis ground	Always	1 MΩ or more
(4AG) No. 9 - chassis ground	Always	1 MΩ or more
(4AG) No. 7 - (4AG) No. 9	Always	1 MΩ or more

Captions in illustration

*1	Front sub sensor LH
*2	Airbag control module

NG → Replace the airbag main harness along with the body harness.

OK

4	Check airbag control module.

(1) Connect all connectors.
(2) Clear the memory.
(3) Perform the reproduction procedure.
(4) Read the DTC. (Current malfunction)
Criteria: DTC B1618 is not displayed.

NG → Replace the front sub sensor LH and the front sub sensor RH. Replace the airbag control module if it does not operate properly even after replacing the sensor.

OK

5	Check DTC

Criteria: No other DTC is displayed.

NG → Perform diagnosis for the displayed DTC.

RS

OK

Complete

DTC	B161A	Lost Communication with Front Satellite Sensor Bus

Circuit description

DTC No.	DTC detected item	Faulty part
B161A	• Harness between airbag control module and front sub sensor is open or shorted. • Front sub sensor is faulty. • Airbag control module is faulty.	• Front sub sensor RH • Front sub sensor LH • Airbag control module • Airbag main harness

Circuit figure

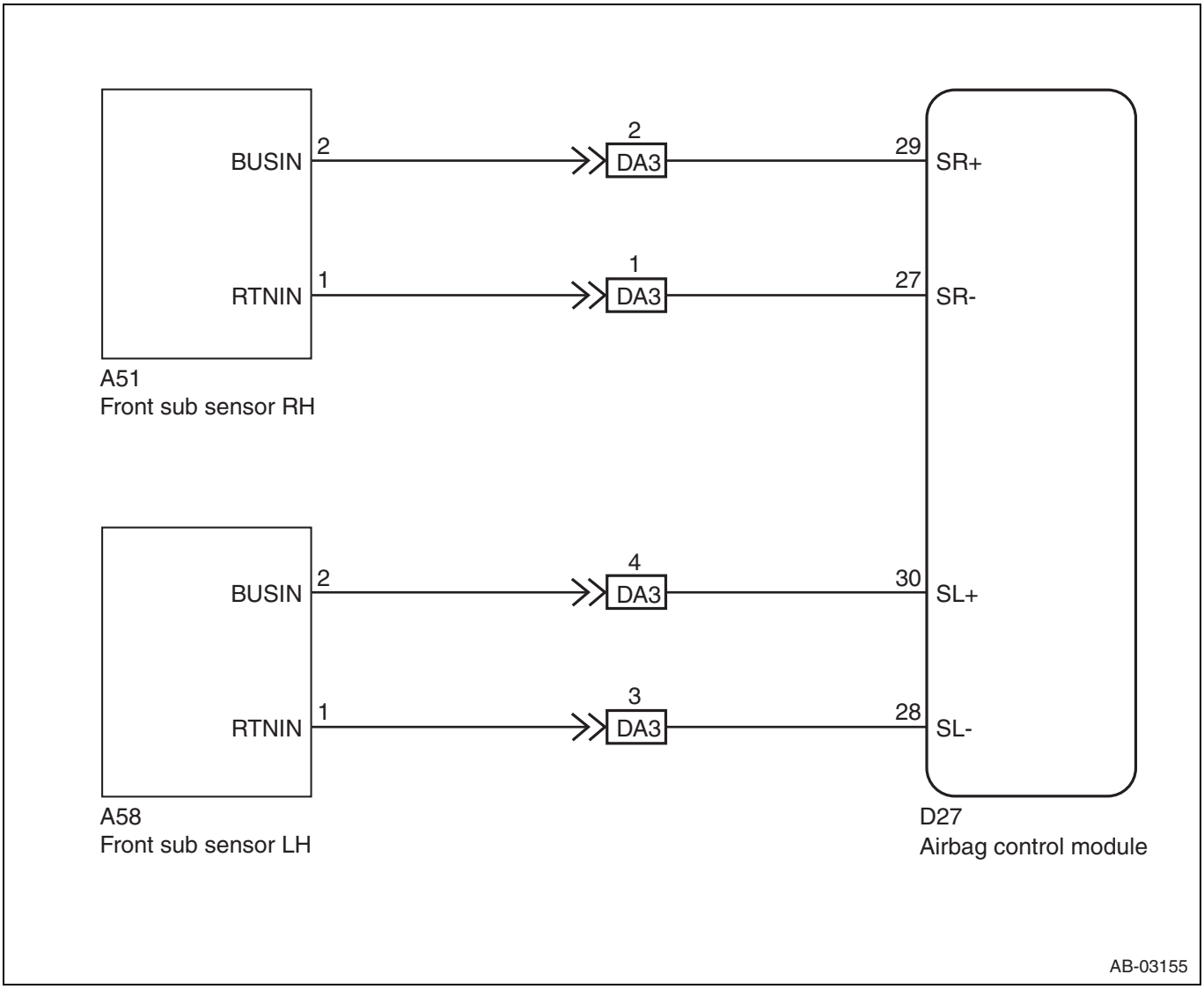

Inspection steps

CAUTION:

Before performing the diagnosis, refer to the precautions.

1	Check poor contact of connectors.

(1) Check for poor contact of the connectors between the airbag control module and the front sub sensor LH.
Criteria: No fault is found.

NG → Replace the airbag main harness along with the body harness.

OK

2	Check airbag main harness (front sensor bus LH).

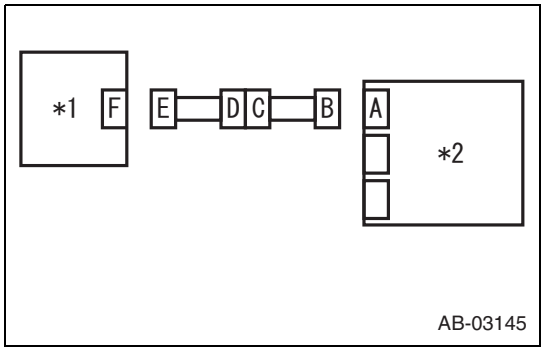

(1) Turn the ignition switch to OFF, disconnect the battery ground terminal, and wait for 60 seconds or more.
(2) Remove the column cover and disconnect the connector (D52).
(3) Disconnect the passenger's airbag module connector (D30).
(4) Disconnect the connector (D27, G19, H32) of the airbag control module.
(5) Connect the connector (1AG) in the test harness AG to the connector B.
(6) Connect the connector 1H in the test harness H to the connector E.
(7) Measure the resistance between the terminals.

Resistance

Inspection terminals	Inspection conditions	Standard value
(4AG) No. 7 - (3H) No. 5	Always	Less than 10 Ω
(4AG) No. 9 - (3H) No. 6	Always	Less than 10 Ω

Captions in illustration

*1	Front sub sensor LH
*2	Airbag control module

NG → Replace the airbag main harness along with the body harness.

OK

3	Check airbag main harness (front sensor bus LH).

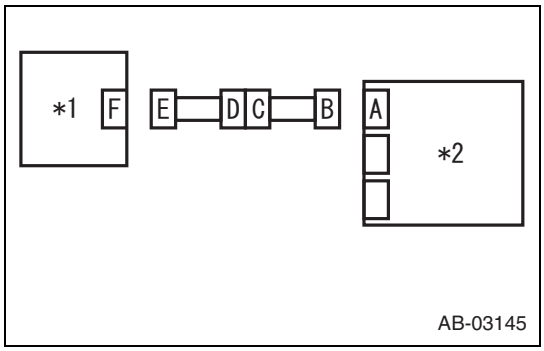

(1) Measure the resistance between the terminals.

Resistance

Inspection terminals	Inspection conditions	Standard value
(4AG) No. 7 - chassis ground	Always	1 MΩ or more
(4AG) No. 9 - chassis ground	Always	1 MΩ or more
(4AG) No. 7 - (4AG) No. 9	Always	1 MΩ or more

Captions in illustration

*1	Front sub sensor LH
*2	Airbag control module

RS

NG → Replace the airbag main harness along with the body harness.

OK

4	Check airbag main harness (front sensor bus RH).

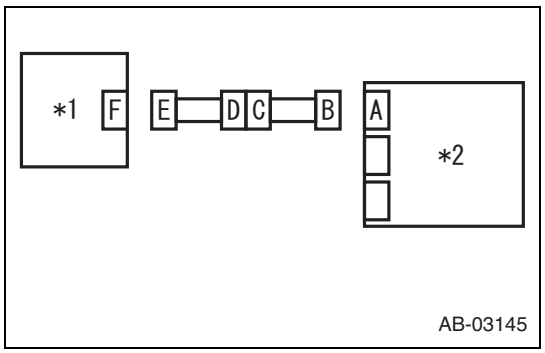

(1) Connect the connector 1H in the test harness H to the connector E.
(2) Measure the resistance between the terminals.

Resistance

Inspection terminals	Inspection conditions	Standard value
(4AG) No. 14 - (3H) No. 5	Always	Less than 10 Ω
(4AG) No. 12 - (3H) No. 6	Always	Less than 10 Ω

Captions in illustration

*1	Front sub sensor RH
*2	Airbag control module

NG → Replace the airbag main harness along with the body harness.

OK

RS

5	Check airbag main harness (front sensor bus RH).

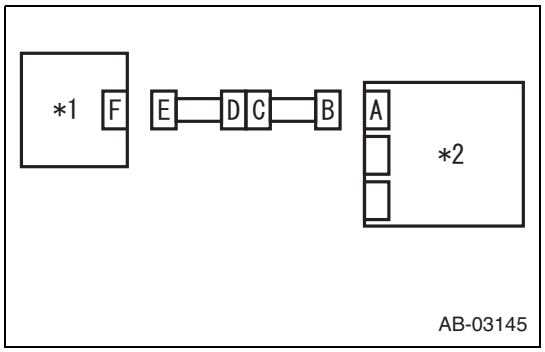

(1) Measure the resistance between the terminals.

Resistance

Inspection terminals	Inspection conditions	Standard value
(4AG) No. 12 - chassis ground	Always	1 MΩ or more
(4AG) No. 14 - chassis ground	Always	1 MΩ or more
(4AG) No. 12 - (4AG) No. 14	Always	1 MΩ or more

Captions in illustration

*1	Front sub sensor RH
*2	Airbag control module

NG → Replace the airbag main harness along with the body harness.

OK

6	Check airbag control module.

(1) Connect all connectors.
(2) Clear the memory.
(3) Perform the reproduction procedure.
(4) Read the DTC. (Current malfunction)
Criteria: DTC B161A is not displayed.

NG → Replace the front sub sensor LH and the front sub sensor RH. Replace the airbag control module if it does not operate properly even after replacing the sensor.

OK

7	Check DTC

Criteria: No other DTC is displayed.

NG → Perform diagnosis for the displayed DTC.

OK

Complete

DTC	B16F1	Passenger's seat belt warning failure

Circuit description

DTC No.	DTC detected item	Faulty part
B16F1	• Airbag sensor ASSY receives the informative signal for short-circuited line, open circuit signal, short to ground signal, or short to B+ signal in seat belt buckle switch RH circuit. • Combination meter ASSY • Airbag sensor ASSY is faulty.	• Airbag main harness • Airbag control module • Combination meter

RS

Circuit figure

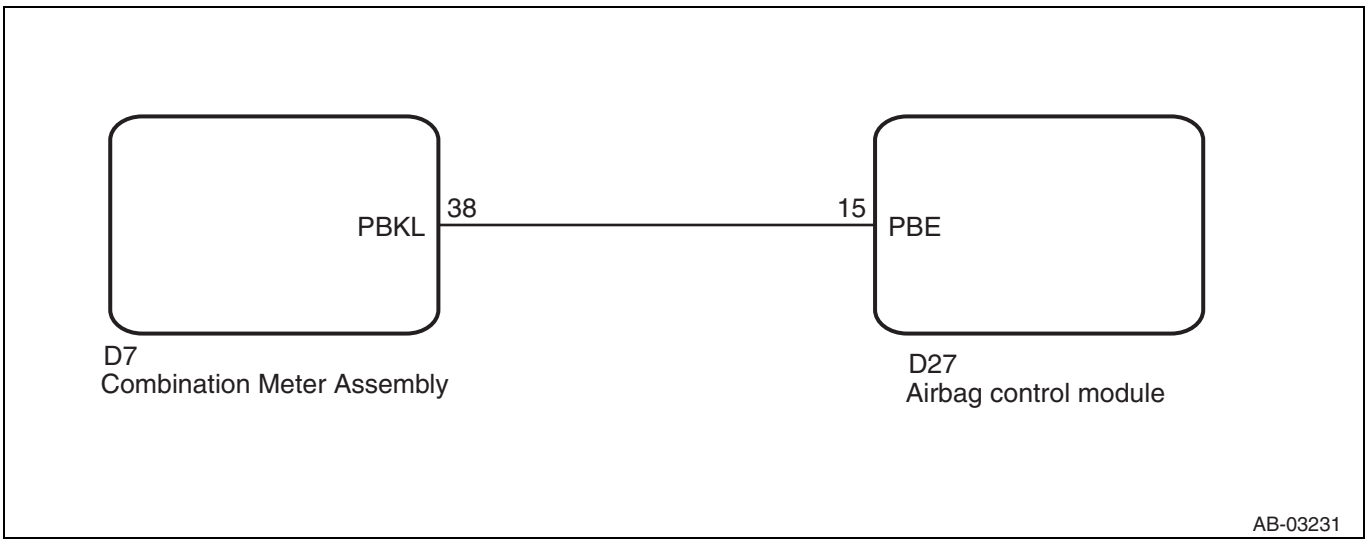

Inspection steps

CAUTION:

Before performing the diagnosis, refer to the precautions.

1	Check airbag harness.

(1) Turn the ignition switch to OFF, disconnect the battery ground terminal, and wait for 60 seconds or more.
(2) Disconnect the connector (D27, G19, H32) from the airbag control module.
(3) Connect the battery ground terminal and turn the ignition switch to ON.
Criteria: The passenger's seat belt warning light blinks for 6 seconds, then goes off.

NG → Go to Step 4.

OK

2	Check airbag harness.

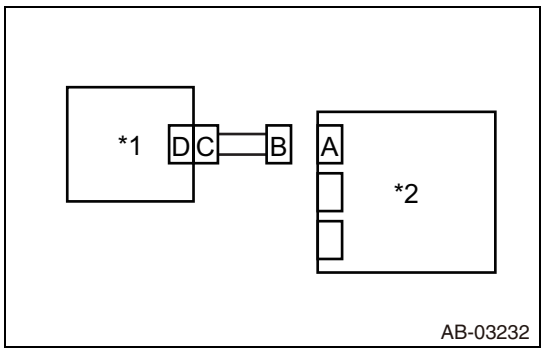

(1) Turn the ignition switch to OFF.
(2) Connect the connector (1AG) in the test harness AG to the connector B.
(3) Connect the connectors (7AG) and (8AG) in the test harness AG.
(4) Turn the ignition switch to ON.
Criteria: The passenger's seat belt warning light blinks for 6 seconds, then repeats illuminating and blinking.

Captions in illustration

*1	Combination meter ASSY
*2	Airbag control module

NG → Go to Step 3.

OK

Replace the airbag control module.

3	Check airbag harness.

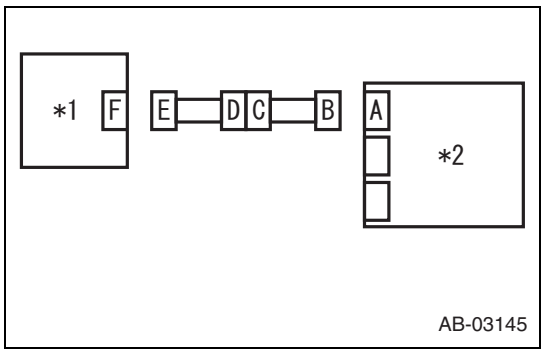

(1) Turn the ignition switch to OFF.
(2) Disconnect the connectors (7AG) and (8AG) for the test harness AG in step 2.
(3) Disconnect the connector (D7) from the combination meter.
(4) Measure the resistance between the terminals.

Resistance

Inspection terminals	Inspection conditions	Standard value
(2AG) No. 10 - (D7) No. 38	Always	Less than 10 Ω

Captions in illustration

*1	Combination meter ASSY
*2	Airbag control module

NG → Replace the airbag main harness along with the body harness, or repair the bulkhead harness and the instrument panel harness.

OK

Replacement of the combination meter

4	Check airbag harness.

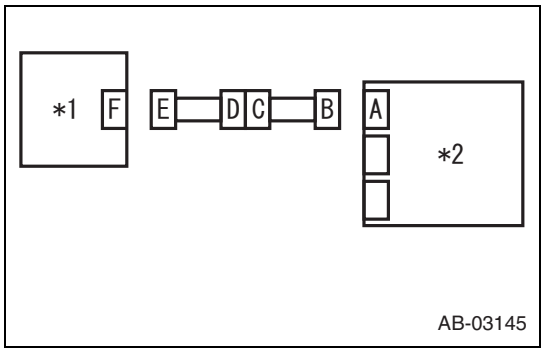

(1) Turn the ignition switch to OFF.
(2) Connect the connector (1AG) in the test harness AG to the connector B.
(3) Measure the resistance between the connector (2AG) in the test harness AG and the chassis ground.

Resistance

Inspection terminals	Inspection conditions	Standard value
(2AG) No. 10 - chassis ground	Always	1 MΩ or more

Captions in illustration

*1	Combination meter ASSY
*2	Airbag control module

NG → Replace the airbag main harness along with the body harness, or repair the bulkhead harness and the instrument panel harness.

OK

Replacement of the combination meter

DTC B16F2 Front Sub Sensor RH Recognition Error

Circuit description

DTC No.	DTC detected item	Faulty part
B16F2	• Front sub sensor RH is installed incorrectly. • Airbag control module is faulty.	• Front sub sensor RH • Airbag control module

Inspection steps

CAUTION:

Before performing the diagnosis, refer to the precautions.

1	Replace front sub sensor RH.

(1) Turn the ignition switch to OFF, disconnect the battery ground terminal, and wait for 60 seconds or more.
(2) Replace the front sub sensor RH with a genuine sensor.
(3) Turn the ignition switch to ON.
Criteria: The warning light is turned off.

RS

NG → Replace the airbag control module.

OK

Complete

DTC	B16F3	Front Sub Sensor LH Recognition Error

Circuit description

DTC No.	DTC detected item	Faulty part
B16F3	• Front sub sensor LH is installed incorrectly. • Airbag control module is faulty.	• Front sub sensor LH • Airbag control module

Inspection steps
CAUTION:
Before performing the diagnosis, refer to the precautions.

1	Replace front sub sensor LH.

(1) Turn the ignition switch to OFF, disconnect the battery ground terminal, and wait for 60 seconds or more.
(2) Replace the front sub sensor LH with a genuine sensor.
(3) Turn the ignition switch to ON.
Criteria: The warning light is turned off.

NG → Replace the airbag control module.

OK

Complete

DTC	B1620	Side Airbag Sensor RH Failure

Circuit description

DTC No.	DTC detected item	Faulty part
B1620	Side airbag sensor RH is faulty.	Side airbag sensor RH

Inspection steps
The circuit within the side airbag sensor RH is faulty. Replace the side airbag sensor RH.

DTC	B1622	Side Airbag Sensor RH Lost Communication

DTC	B1623	Side Airbag Sensor RH Initialization Error

Circuit description

DTC No.	DTC detected item	Faulty part
B1622 B1623	• Open or short circuit in harness of side sensor bus RH. • Side airbag sensor RH, curtain airbag sensor RH, and front door impact sensor RH are faulty. • Airbag control module is faulty.	• Side airbag sensor RH • Curtain airbag sensor RH • Airbag control module • Airbag rear harness • Front door impact sensor RH

Circuit figure

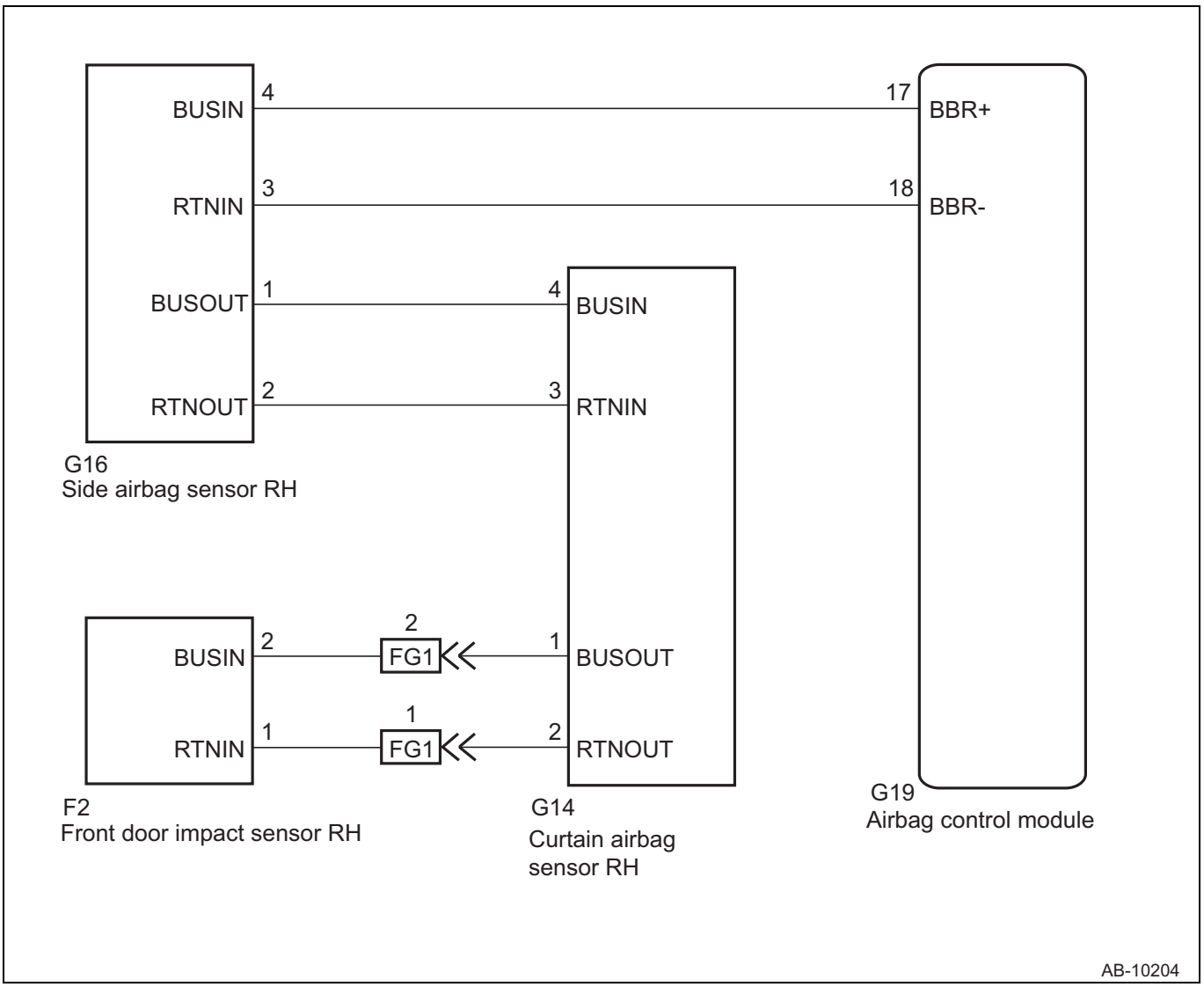

Inspection steps

CAUTION:

Before performing the diagnosis, refer to the precautions.

1	Check poor contact of connectors.

(1) Check for poor contact of the connectors between the airbag control module and the side airbag sensor RH.
Criteria: No fault is found.

NG → Replace the airbag rear harness along with the body harness.

OK

2	Check airbag rear harness (between airbag control module and side airbag sensor RH).

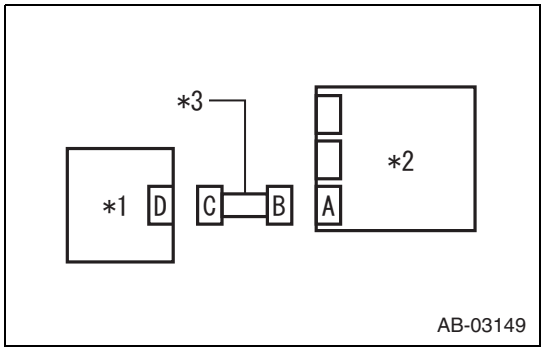

(1) Turn the ignition switch to OFF, disconnect the battery ground terminal, and wait for 60 seconds or more.
(2) Disconnect the connector (G17) from the seat belt pretensioner RH.
(3) Disconnect the connector (G11) from the curtain airbag module RH.
(4) Disconnect the connector (Gc1) of the side airbag module RH.
(5) Disconnect the connector (D27, G19, H32) of the airbag control module.
(6) Connect the connector (1AG) in the test harness AG to the connector B.
(7) Connect the connector 2V in the test harness V to the connector C.
(8) Measure the resistance between the terminals.

Resistance

Inspection terminals	Inspection conditions	Standard value
(5AG) No. 14 - (3V) No. 1	Always	Less than 10 Ω
(5AG) No. 16 - (3V) No. 2	Always	Less than 10 Ω

Captions in illustration

*1	Side airbag sensor RH
*2	Airbag control module
*3	Airbag rear harness

NG → Replace the airbag rear harness along with the body harness.

OK

3	Check airbag rear harness (between airbag control module and side airbag sensor RH).

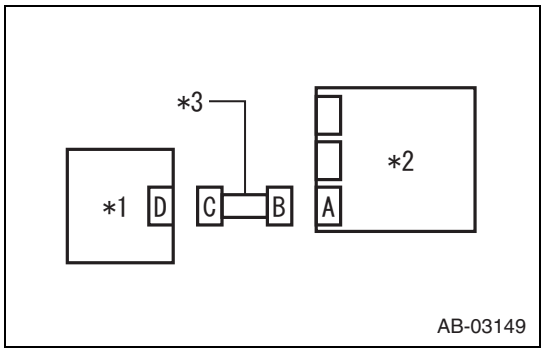

(1) Measure the resistance between the terminals.

Resistance

Inspection terminals	Inspection conditions	Standard value
(3V) No. 1 - chassis ground	Always	1 MΩ or more
(3V) No. 2 - chassis ground	Always	1 MΩ or more
(3V) No. 1 - (3V) No. 2	Always	1 MΩ or more

Captions in illustration

*1	Side airbag sensor RH

RS

*2	Airbag control module
*3	Airbag rear harness

NG → Replace the airbag rear harness along with the body harness.

OK

4	Check DTC

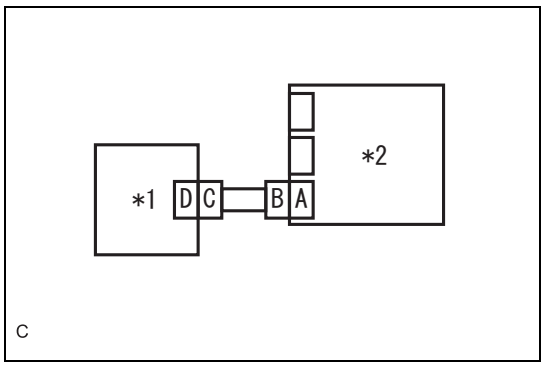

(1) Connect all connectors.
(2) Clear the memory.
(3) Perform the reproduction procedure.
(4) Read the DTC. (Current malfunction)
Criteria: DTC B1623 is not displayed.

Captions in illustration

*1	Side airbag sensor RH
*2	Airbag control module

NG → Go to Step 6.

OK

5	Check DTC

Criteria: No other DTC is displayed.

NG → Perform diagnosis for the displayed DTC.

OK

Complete

6	Check DTC

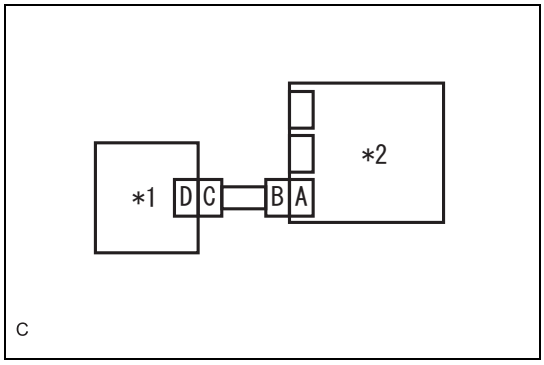

(1) Turn the ignition switch to OFF, disconnect the battery ground terminal, and wait for 60 seconds or more.
(2) Replace the side airbag sensor RH.
(3) Connect all connectors.
(4) Clear the memory.
(5) Perform the reproduction procedure.
(6) Read the DTC. (Current malfunction)
Criteria: DTC B1623 is not displayed.

Captions in illustration

*1	Side airbag sensor RH
*2	Airbag control module

NG → Replace the curtain airbag sensor RH. Replace the airbag control module if it does not operate properly even after replacing the sensor.

RS

OK

7	Check DTC

Criteria: No other DTC is displayed.

NG → Perform diagnosis for the displayed DTC.

OK

Complete

DTC	B1625	Side Airbag Sensor LH Failure

Circuit description

DTC No.	DTC detected item	Faulty part
B1625	Side airbag sensor LH is faulty.	Side airbag sensor LH

Inspection steps

The circuit within the side airbag sensor LH is faulty. Replace the side airbag sensor LH.

RS

DTC	B1627	Side Airbag Sensor LH Lost Communication

DTC	B1628	Side Airbag Sensor LH Initialization Error

Circuit description

DTC No.	DTC detected item	Faulty part
B1627 B1628	• Open or short circuit in harness of side sensor bus LH. • Side airbag sensor LH, curtain airbag sensor LH, and front door impact sensor LH are faulty. • Airbag control module is faulty.	• Side airbag sensor LH • Curtain airbag sensor LH • Airbag control module • Airbag rear harness • Front door impact sensor LH

Circuit figure

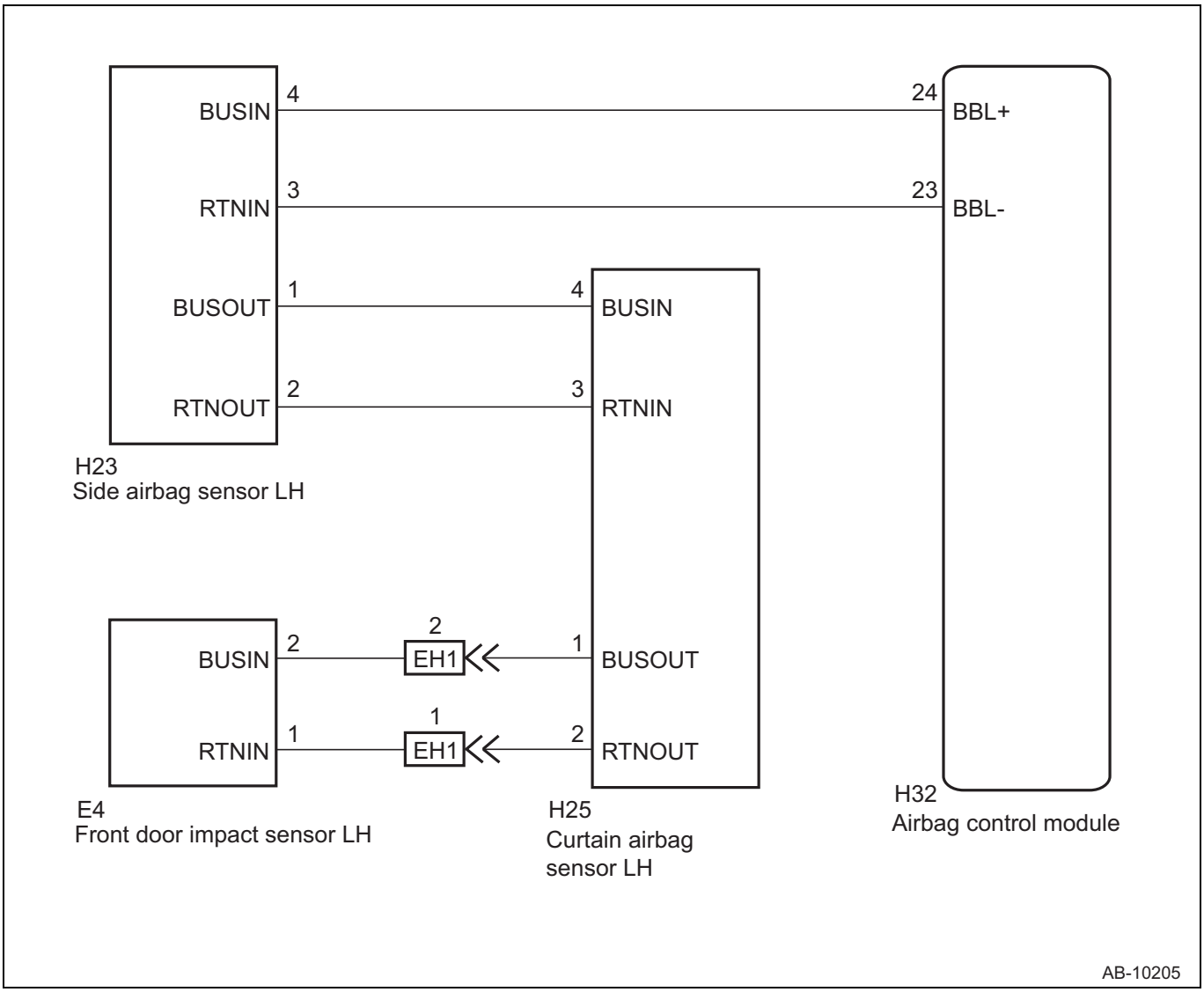

Inspection steps

CAUTION:

Before performing the diagnosis, refer to the precautions.

1	Check poor contact of connectors.

(1) Check for poor contact of the connectors between the airbag control module and the side airbag sensor LH.

Criteria: No fault is found.

NG → Replace the airbag rear harness along with the body harness.

OK →

2	Check airbag rear harness (between airbag control module and side airbag sensor LH).

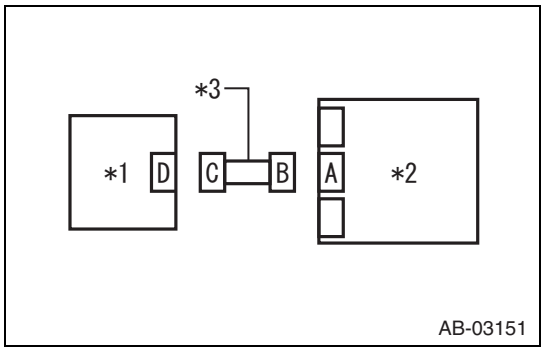

(1) Turn the ignition switch to OFF, disconnect the battery ground terminal, and wait for 60 seconds or more.
(2) Disconnect the connector (H22) from the seat belt pretensioner LH.
(3) Disconnect the connector (H30) from the curtain airbag module LH.
(4) Disconnect the connector (Hb1) of the side airbag module LH.
(5) Disconnect the connector (D27, G19, H32) of the airbag control module.
(6) Connect the connector (1AG) in the test harness AG to the connector B.
(7) Connect the connector 2V in the test harness V to the connector C.
(8) Measure the resistance between the terminals.

Resistance

Inspection terminals	Inspection conditions	Standard value
(5AG) No. 8 - (3V) No. 2	Always	Less than 10 Ω
(5AG) No. 10 - (3V) No. 1	Always	Less than 10 Ω

Captions in illustration

*1	Side airbag sensor LH
*2	Airbag control module
*3	Airbag rear harness

RS

NG → Replace the airbag rear harness along with the body harness.

OK

3	Check airbag rear harness (between airbag control module and side airbag sensor LH).

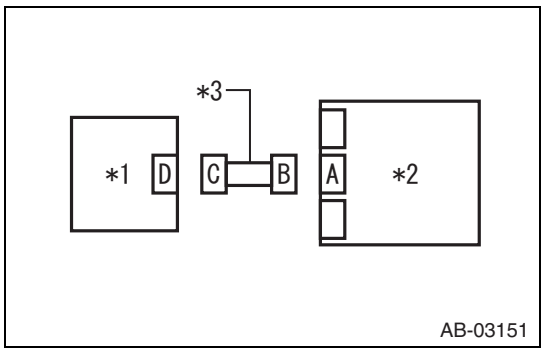

(1) Measure the resistance between the terminals.

Resistance

Inspection terminals	Inspection conditions	Standard value
(3V) No. 1 - chassis ground	Always	1 MΩ or more
(3V) No. 2 - chassis ground	Always	1 MΩ or more
(3V) No. 1 - (3V) No. 2	Always	1 MΩ or more

Captions in illustration

*1	Side airbag sensor LH
*2	Airbag control module
*3	Airbag rear harness

NG → Replace the airbag rear harness along with the body harness.

OK

4	Check DTC

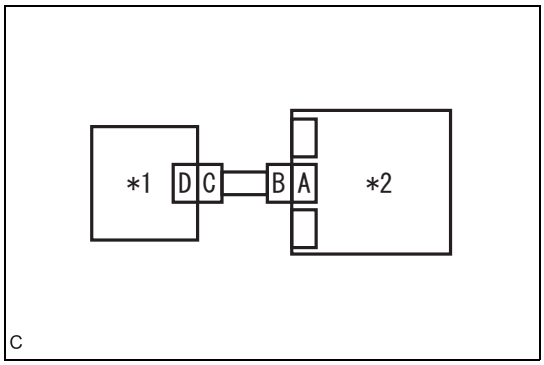

(1) Connect all connectors.
(2) Clear the memory.
(3) Perform the reproduction procedure.
(4) Read the DTC. (Current malfunction)
Criteria: DTC B1628 is not displayed.

Captions in illustration

*1	Side airbag sensor LH
*2	Airbag control module

NG → Go to Step 6.

OK

5	Check DTC

Criteria: No other DTC is displayed.

NG → Perform diagnosis for the displayed DTC.

OK

Complete

6	Check DTC

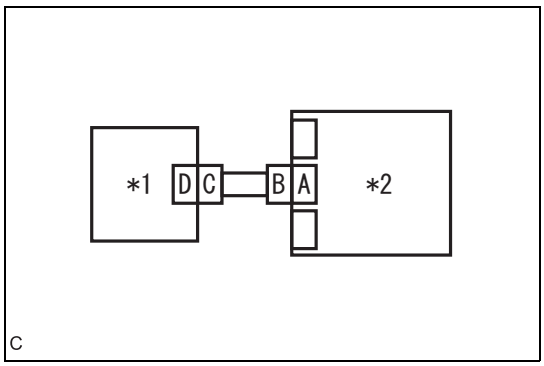

(1) Turn the ignition switch to OFF, disconnect the battery ground terminal, and wait for 60 seconds or more.
(2) Replace the side airbag sensor LH.
(3) Connect all connectors.
(4) Clear the memory.
(5) Perform the reproduction procedure.
(6) Read the DTC. (Current malfunction)
Criteria: DTC B1628 is not displayed.

Captions in illustration

*1	Side airbag sensor LH
*2	Airbag control module

NG → Replace the curtain airbag sensor LH. Replace the airbag control module if it does not operate properly even after replacing the sensor.

OK

7	Check DTC

Criteria: No other DTC is displayed.

NG → Perform diagnosis for the displayed DTC.

RS

OK

Complete

DTC	B1630	Curtain Airbag Sensor RH Failure

Circuit description

DTC No.	DTC detected item	Faulty part
B1630	Curtain airbag sensor RH is faulty.	Curtain airbag sensor RH

Inspection steps

The circuit within the curtain airbag sensor RH is faulty. Replace the curtain airbag sensor RH.

DTC	B1632	Curtain Airbag Sensor RH Lost Communication

DTC	B1633	Curtain Airbag Sensor RH Initialization Error

Circuit description

DTC No.	DTC detected item	Faulty part
B1632 B1633	• Open or short circuit in harness of side sensor bus RH. • Side airbag sensor RH, curtain airbag sensor RH, and front door impact sensor RH are faulty. • Airbag control module is faulty.	• Side airbag sensor RH • Curtain airbag sensor RH • Airbag control module • Airbag rear harness • Front door impact sensor RH

Circuit figure

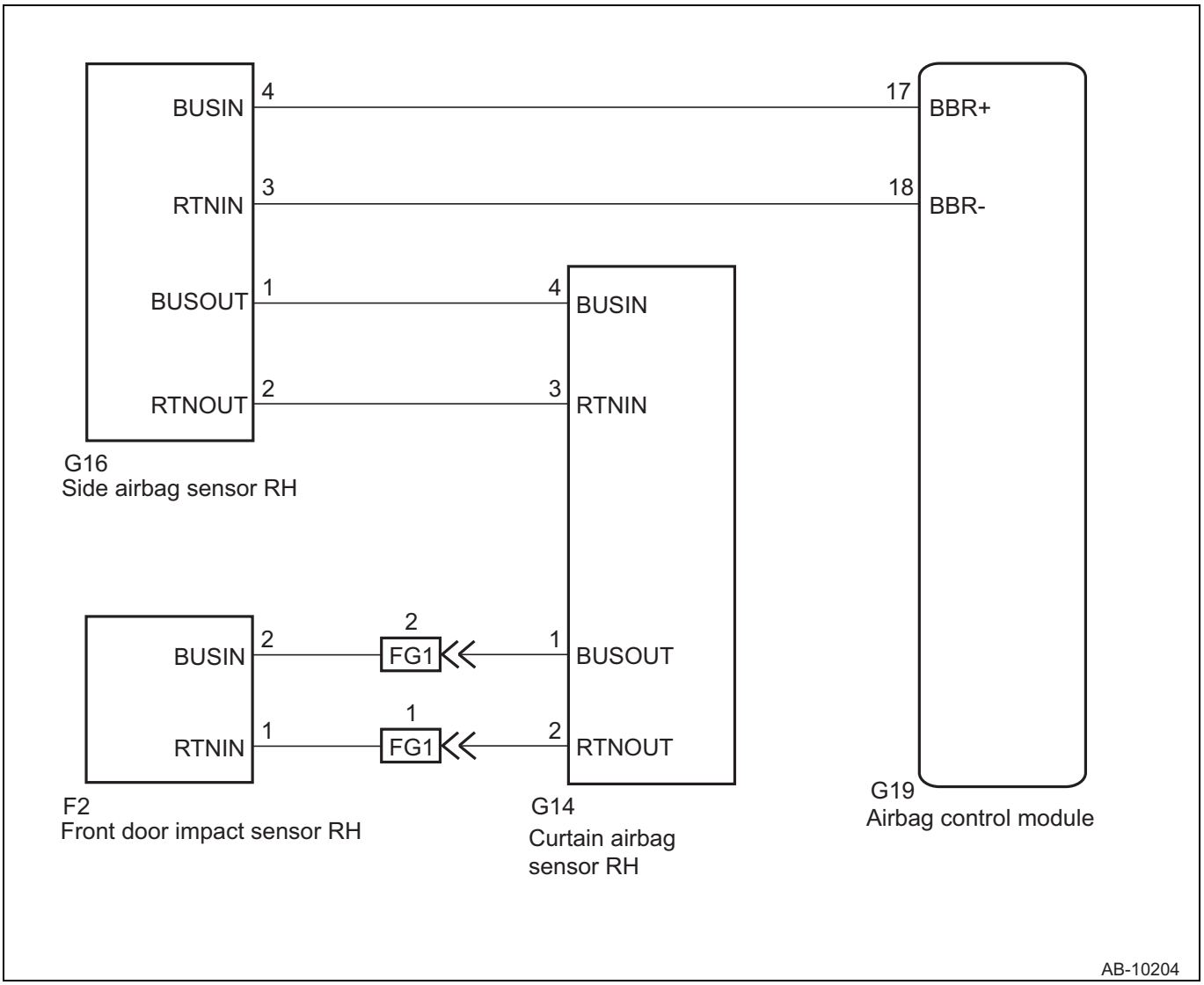

Inspection steps

CAUTION:

Before performing the diagnosis, refer to the precautions.

1	Check DTC

(1) Check for DTC.

Criteria: DTC B1622 and B1623 are not displayed.

NG → Perform diagnosis for the displayed DTC B1622 and B1623.

OK

2	Check poor contact of connectors.

(1) Check for poor contact of the connectors between the airbag control module and the curtain airbag sensor RH.

Criteria: No fault is found.

NG → Replace the airbag rear harness along with the body harness.

OK

3	Check airbag rear harness (between side airbag sensor and curtain airbag sensor RH).

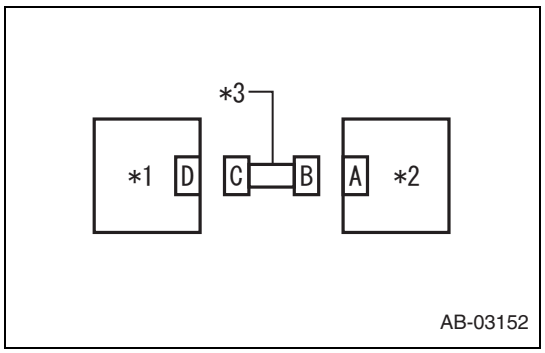

(1) Turn the ignition switch to OFF, disconnect the battery ground terminal, and wait for 60 seconds or more.
(2) Disconnect the connector (G17) from the seat belt pretensioner RH.
(3) Disconnect the connector (G11) from the curtain airbag module RH.
(4) Disconnect the connector (Gc1) of the side airbag module RH.
(5) Disconnect the connector (G16) of the side airbag sensor RH.
(6) Connect the connector B of the side airbag sensor RH and the connector (1AI) in the test harness AI.
(7) Connect the connector (2AI) in the test harness AI and the connector (1V) in the test harness V.
(8) Disconnect the connector C from the curtain airbag sensor RH, and connect to the connector (2V) in the test harness V.
(9) Measure the resistance between the terminals.

Resistance

Inspection terminals	Inspection conditions	Standard value
(3V) No. 2 - (3V) No. 6	Always	Less than 10 Ω
(3V) No. 1 - (3V) No. 7	Always	Less than 10 Ω

Captions in illustration

*1	Curtain airbag sensor RH
*2	Side airbag sensor RH
*3	Airbag rear harness

NG → Replace the airbag rear harness along with the body harness.

OK

4	Check airbag rear harness (between side airbag sensor and curtain airbag sensor RH).

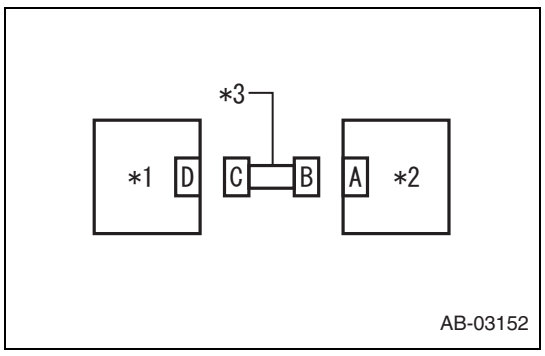

(1) Measure the resistance between the terminals.

Resistance

Inspection terminals	Inspection conditions	Standard value
(3V) No. 1 - chassis ground	Always	1 MΩ or more
(3V) No. 2 - chassis ground	Always	1 MΩ or more
(3V) No. 1 - (3V) No. 2	Always	1 MΩ or more

Captions in illustration

*1	Curtain airbag sensor RH
*2	Side airbag sensor RH
*3	Airbag rear harness

RS

NG → Replace the airbag rear harness along with the body harness.

OK

5	Check DTC

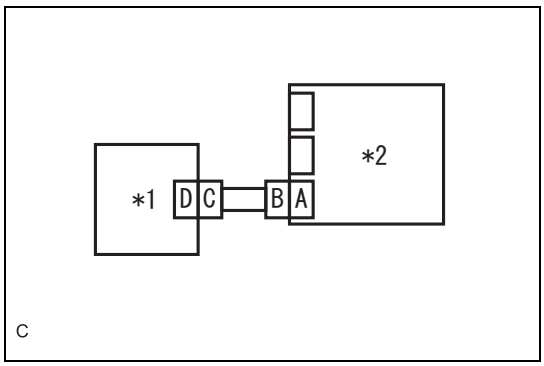

(1) Connect all connectors.
(2) Clear the memory.
(3) Perform the reproduction procedure.
(4) Read the DTC. (Current malfunction)
Criteria: DTC B1633 is displayed.

Captions in illustration

*1	Side airbag sensor RH
*2	Airbag control module

NG → Go to Step 7.

OK

6	Check DTC

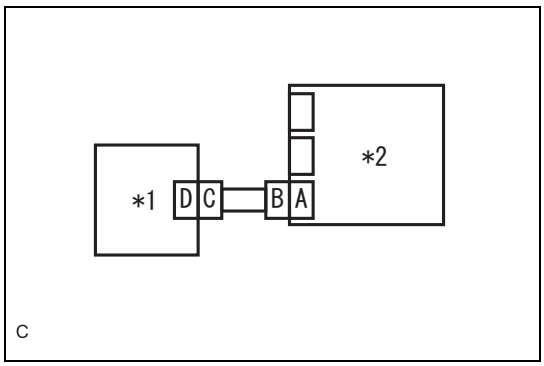

(1) Turn the ignition switch to OFF, disconnect the battery ground terminal, and wait for 60 seconds or more.
(2) Replace the curtain airbag sensor RH.
(3) Connect all connectors.
(4) Clear the memory.
(5) Perform the reproduction procedure.
(6) Read the DTC. (Current malfunction)
Criteria: DTC B1633 is displayed.

Captions in illustration

*1	Curtain airbag sensor RH
*2	Airbag control module

NG → Go to Step 8.

OK

7	Check DTC

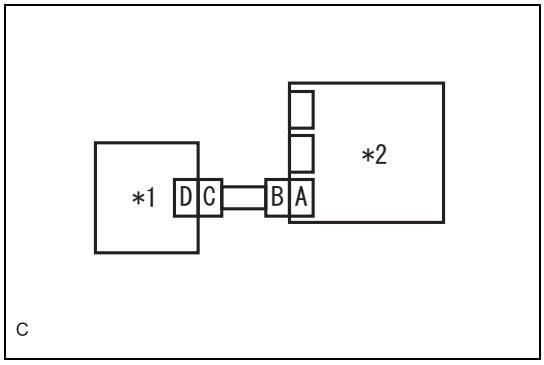

(1) Turn the ignition switch to OFF, disconnect the battery ground terminal, and wait for 60 seconds or more.
(2) Replace the side airbag sensor RH.
(3) Connect all connectors.
(4) Clear the memory.
(5) Perform the reproduction procedure.
(6) Read the DTC. (Current malfunction)
Criteria: DTC B1633 is displayed.

Captions in illustration

*1	Side airbag sensor RH
*2	Airbag control module

NG → Go to Step 8.

OK

Replace the airbag control module.

8	Check DTC

Criteria: No other DTC is displayed.

NG → Perform diagnosis for the displayed DTC.

OK

Complete

DTC	B1635	Curtain Airbag Sensor LH Failure

Circuit description

DTC No.	DTC detected item	Faulty part
B1635	Curtain airbag sensor LH is faulty.	Curtain airbag sensor LH

RS

Inspection steps

The circuit within the curtain airbag sensor LH is faulty. Replace the curtain airbag sensor LH.

DTC	B1637	Curtain Airbag Sensor LH Lost Communication

DTC	B1638	Curtain Airbag Sensor LH Initialization Error

Circuit description

DTC No.	DTC detected item	Faulty part
B1637 B1638	• Open or short circuit in harness of side sensor bus LH. • Side airbag sensor LH, curtain airbag sensor LH, and front door impact sensor LH are faulty. • Airbag control module is faulty.	• Side airbag sensor LH • Curtain airbag sensor LH • Airbag control module • Airbag rear harness • Front door impact sensor LH

Circuit figure

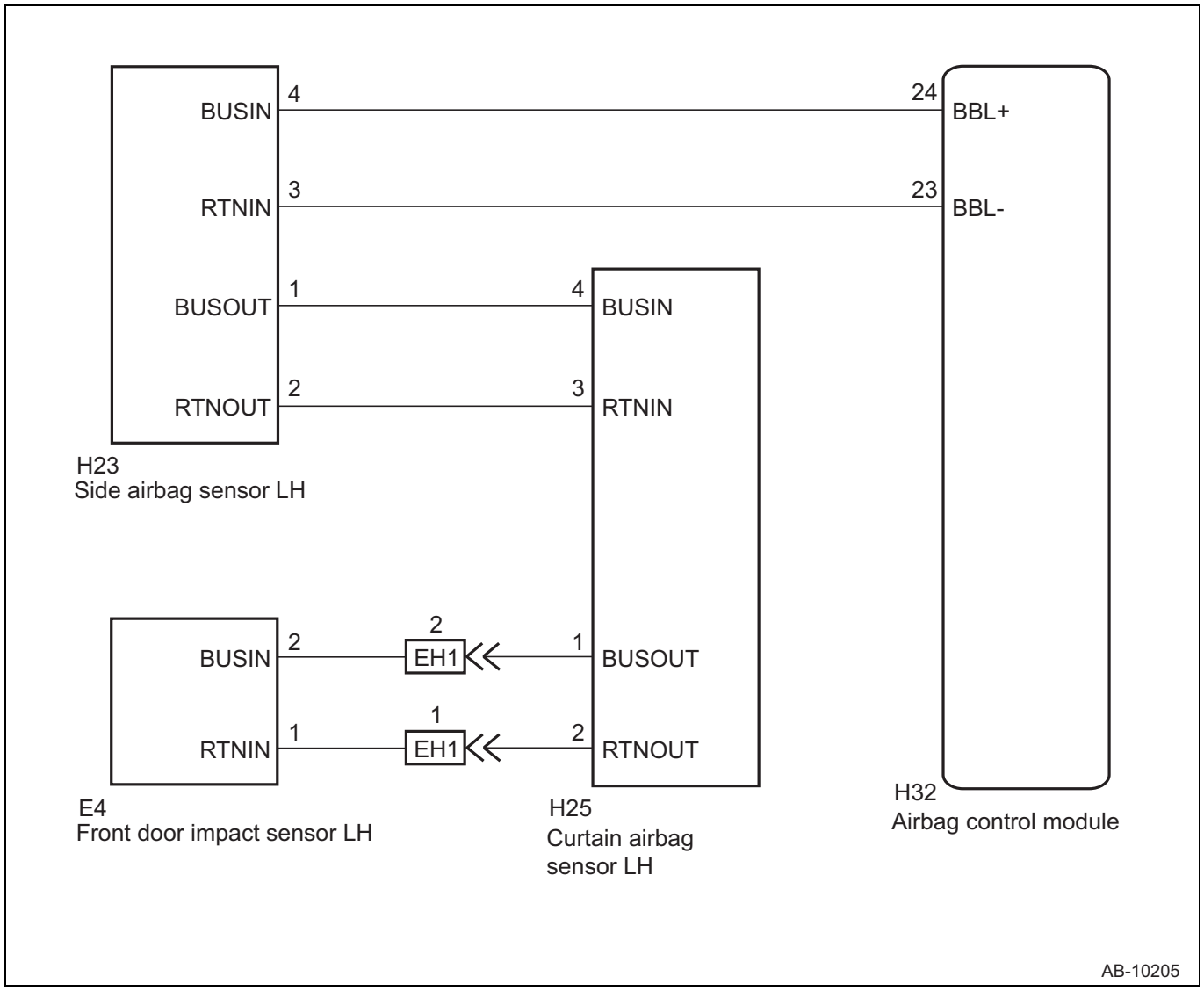

Inspection steps

CAUTION:

Before performing the diagnosis, refer to the precautions.

1	Check DTC

(1) Check for DTC.

Criteria: DTC B1627 and B1628 are not displayed.

NG → Perform diagnosis for the displayed DTC B1627 and B1628.

OK

2	Check poor contact of connectors.

(1) Check for poor contact of the connectors between the airbag control module and the curtain airbag sensor LH.

Criteria: No fault is found.

NG → Replace the airbag rear harness along with the body harness.

OK

3	Check airbag rear harness (between side airbag sensor and curtain airbag sensor LH).

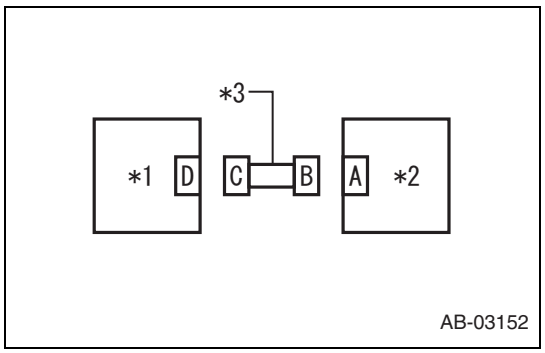

(1) Turn the ignition switch to OFF, disconnect the battery ground terminal, and wait for 60 seconds or more.
(2) Disconnect the connector (H22) from the seat belt pretensioner LH.
(3) Disconnect the connector (H30) from the curtain airbag module LH.
(4) Disconnect the connector (Hb1) of the side airbag module LH.
(5) Disconnect the connector (H23) of the side airbag sensor LH.
(6) Connect the connector B of the side airbag sensor LH and the connector (1AI) in the test harness AI.
(7) Connect the connector (2AI) in the test harness AI and the connector (1V) in the test harness V.
(8) Disconnect the connector C from the curtain airbag sensor LH, and connect to the connector (2V) in the test harness V.
(9) Measure the resistance between the terminals.

Resistance

Inspection terminals	Inspection conditions	Standard value
(3V) No. 2 - (3V) No. 6	Always	Less than 10 Ω
(3V) No. 1 - (3V) No. 7	Always	Less than 10 Ω

Captions in illustration

*1	Curtain airbag sensor LH
*2	Side airbag sensor LH
*3	Airbag rear harness

NG → Replace the airbag rear harness along with the body harness.

OK

4	Check airbag rear harness (between side airbag sensor and curtain airbag sensor LH).

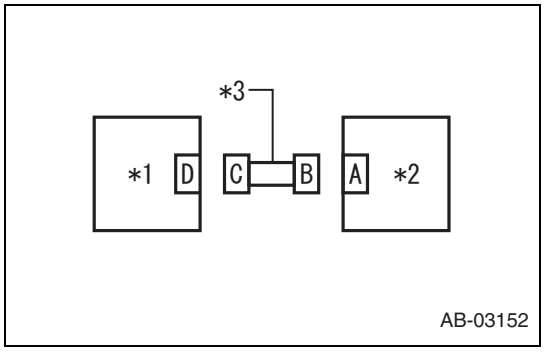

(1) Measure the resistance between the terminals.

Resistance

Inspection terminals	Inspection conditions	Standard value
(3V) No. 1 - chassis ground	Always	1 MΩ or more
(3V) No. 2 - chassis ground	Always	1 MΩ or more
(3V) No. 1 - (3V) No. 2	Always	1 MΩ or more

Captions in illustration

*1	Curtain airbag sensor LH
*2	Side airbag sensor LH
*3	Airbag rear harness

RS

NG → Replace the airbag rear harness along with the body harness.

OK

5	Check DTC

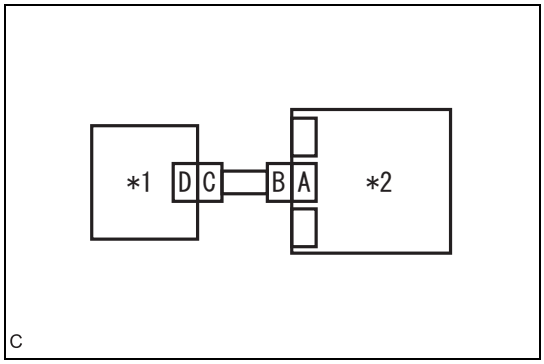

(1) Connect all connectors.
(2) Clear the memory.
(3) Perform the reproduction procedure.
(4) Read the DTC. (Current malfunction)
Criteria: DTC B1638 is displayed.

Captions in illustration

*1	Side airbag sensor LH
*2	Airbag control module

NG → Go to Step 7.

OK

6	Check DTC

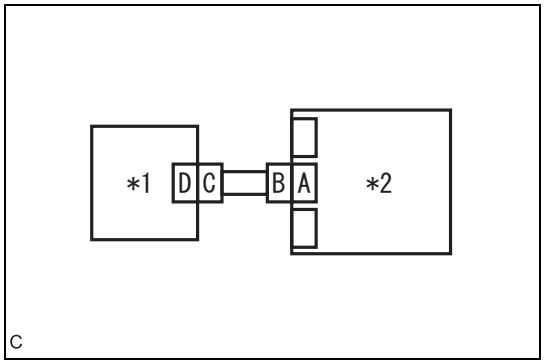

(1) Turn the ignition switch to OFF, disconnect the battery ground terminal, and wait for 60 seconds or more.
(2) Replace the curtain airbag sensor LH.
(3) Connect all connectors.
(4) Clear the memory.
(5) Perform the reproduction procedure.
(6) Read the DTC. (Current malfunction)
Criteria: DTC B1638 is displayed.

Captions in illustration

*1	Curtain airbag sensor LH
*2	Airbag control module

NG → Go to Step 8.

OK

7	Check DTC

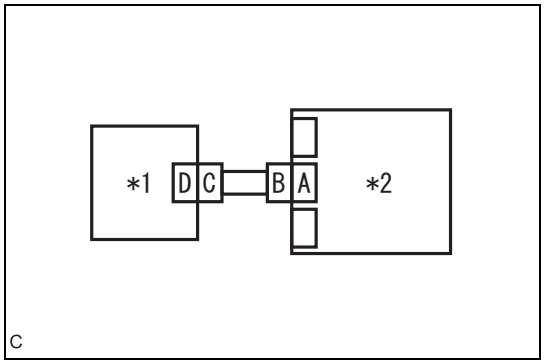

(1) Turn the ignition switch to OFF, disconnect the battery ground terminal, and wait for 60 seconds or more.
(2) Replace the side airbag sensor LH.
(3) Connect all connectors.
(4) Clear the memory.
(5) Perform the reproduction procedure.
(6) Read the DTC. (Current malfunction)
Criteria: DTC B1638 is displayed.

Captions in illustration

*1	Side airbag sensor LH
*2	Airbag control module

RS

NG → Go to Step 8.

OK

Replace the airbag control module.

8	Check DTC

Criteria: No other DTC is displayed.

NG → Perform diagnosis for the displayed DTC.

OK

Complete

DTC	B16F4	Side Airbag Sensor RH Recognition Error

Circuit description

DTC No.	DTC detected item	Faulty part
B16F4	• Side airbag sensor RH is installed incorrectly. • Airbag control module is faulty.	• Curtain airbag sensor RH • Airbag control module

RS

Inspection steps

CAUTION:

Before performing the diagnosis, refer to the precautions.

1	Replace side airbag sensor (RH).

(1) Turn the ignition switch to OFF, disconnect the battery ground terminal, and wait for 60 seconds or more.
(2) Replace the side airbag sensor RH with a genuine sensor.
(3) Turn the ignition switch to ON.
Criteria: The warning light is turned off.

NG → Replace the airbag control module.

OK

Complete

DTC	B16F5	Side Airbag Sensor LH Recognition Error

Circuit description

DTC No.	DTC detected item	Faulty part
B16F5	• Side airbag sensor LH is installed incorrectly. • Airbag control module is faulty.	• Curtain airbag sensor LH • Airbag control module

Inspection steps
CAUTION:
Before performing the diagnosis, refer to the precautions.

1	Replace side airbag sensor LH.

(1) Turn the ignition switch to OFF, disconnect the battery ground terminal, and wait for 60 seconds or more.
(2) Replace the side airbag sensor LH with a genuine sensor.
(3) Turn the ignition switch to ON.
Criteria: The warning light is turned off.

NG → Replace the airbag control module.

OK

Complete

DTC B16F6 Curtain Airbag Sensor RH Recognition Error

Circuit description

DTC No.	DTC detected item	Faulty part
B16F6	• Curtain airbag sensor RH is installed incorrectly. • Airbag control module is faulty.	• Curtain airbag sensor RH • Airbag control module

RS

Inspection steps
CAUTION:
Before performing the diagnosis, refer to the precautions.

1	Replace curtain airbag sensor RH.

(1) Turn the ignition switch to OFF, disconnect the battery ground terminal, and wait for 60 seconds or more.
(2) Replace the curtain airbag sensor RH with a genuine sensor.
(3) Turn the ignition switch to ON.
Criteria: The warning light is turned off.

NG → Replace the airbag control module.

OK

Complete

DTC B16F7 Curtain Airbag Sensor LH Recognition Error

Circuit description

DTC No.	DTC detected item	Faulty part
B16F7	• Curtain airbag sensor LH is installed incorrectly. • Airbag control module is faulty.	• Curtain airbag sensor LH • Airbag control module

Inspection steps
CAUTION:
Before performing the diagnosis, refer to the precautions.

1	Replace curtain airbag sensor LH.

(1) Turn the ignition switch to OFF, disconnect the battery ground terminal, and wait for 60 seconds or more.
(2) Replace the curtain airbag sensor LH with a genuine sensor.
(3) Turn the ignition switch to ON.
Criteria: The warning light is turned off.

NG → Replace the airbag control module.

OK

Complete

DTC	B1642	Side Satellite Sensor Bus RH Lost Communication

Circuit description

DTC No.	DTC detected item	Faulty part
B1642	• Open or short circuit in harness of side sensor bus RH. • Side airbag sensor RH is faulty. • Curtain airbag sensor RH is faulty. • Front door impact sensor RH is faulty. • Airbag control module is faulty.	• Side airbag sensor RH • Curtain airbag sensor RH • Front door impact sensor RH • Airbag control module • Airbag rear harness

RS

Circuit figure

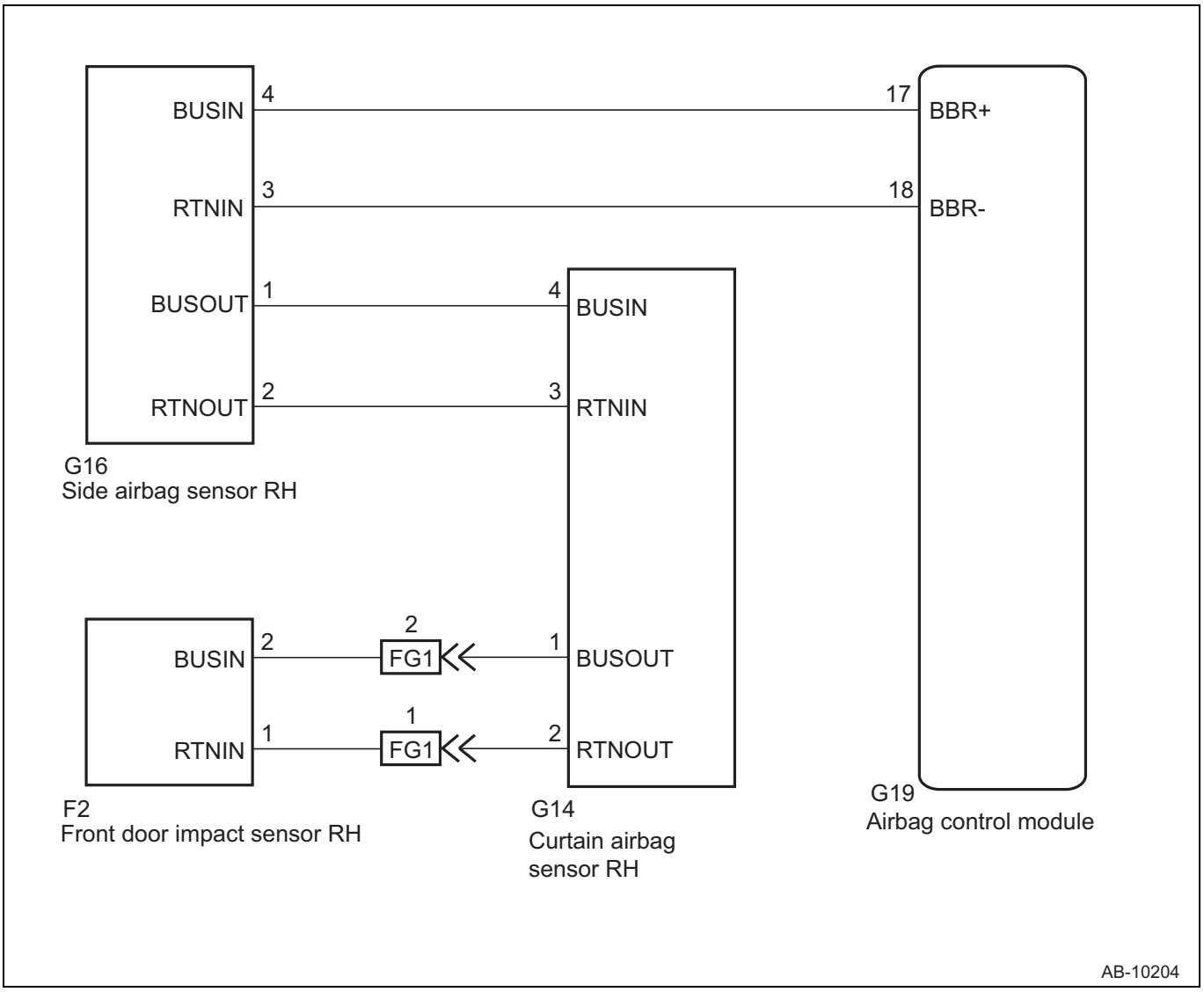

Inspection steps

CAUTION:

Before performing the diagnosis, refer to the precautions.

1	Check DTC

(1) Check for DTC.

Criteria: DTC B1622 and B1623 are not displayed.

NG → Perform diagnosis for the displayed DTC B1622 and B1623.

OK

2	Check DTC

(1) Check for DTC.

Criteria: DTC B1632 and B1633 are not displayed.

RS

NG → Perform diagnosis for the displayed DTC B1632 and B1633.

OK

3	Check DTC

(1) Check for DTC.
Criteria: DTC B1692 and B1693 are not displayed.

NG → Perform diagnosis for the displayed DTC B1692 and B1693.

OK

4	Check poor contact of connectors.

(1) Check for poor contact of the connectors between the airbag control module and the front door impact sensor RH.
Criteria: No fault is found.

NG → Replace the airbag rear harness and the door harness.

OK

RS

5	Check airbag rear harness (between airbag control module and side airbag sensor RH).

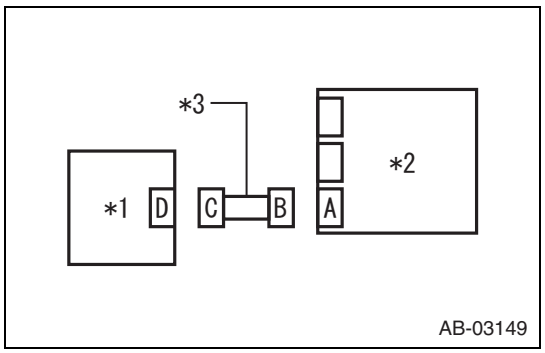

(1) Turn the ignition switch to OFF, disconnect the battery ground terminal, and wait for 60 seconds or more.
(2) Disconnect the connector (G17) from the seat belt pretensioner RH.
(3) Disconnect the connector (G11) from the curtain airbag module RH.
(4) Disconnect the connector (Gc1) of the side airbag module RH.
(5) Disconnect the connector (D27, G19, H32) of the airbag control module.
(6) Connect the connector (1AG) in the test harness AG to the connector B.
(7) Disconnect the connector (G16) from the side airbag sensor RH.
(8) Connect the connector in the test harness V to the connector C.
(9) Measure the resistance between the terminals.

Resistance

Inspection terminals	Inspection conditions	Standard value
(5AG) No. 16 - (3V) No. 2	Always	Less than 10 Ω
(5AG) No. 14 - (3V) No. 1	Always	Less than 10 Ω

Captions in illustration

*1	Side airbag sensor RH
*2	Airbag control module
*3	Airbag rear harness

NG → Replace the airbag rear harness along with the body harness.

OK

6	Check airbag rear harness (between airbag control module and side airbag sensor RH).

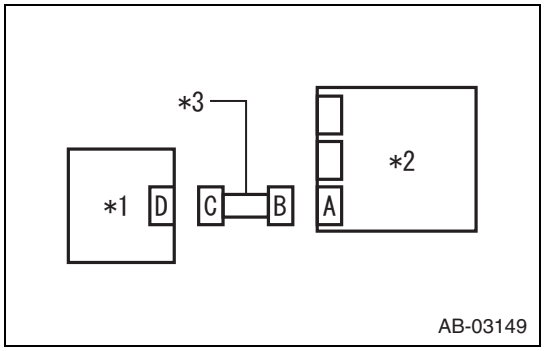

(1) Measure the resistance between the terminals.

Resistance

Inspection terminals	Inspection conditions	Standard value
(3V) No. 1 - chassis ground	Always	1 MΩ or more
(3V) No. 2 - chassis ground	Always	1 MΩ or more
(3V) No. 1 - (3V) No. 2	Always	1 MΩ or more

Captions in illustration

*1	Side airbag sensor RH
*2	Airbag control module
*3	Airbag rear harness

NG → Replace the airbag rear harness along with the body harness.

OK

7	Check airbag rear harness (between side airbag sensor RH and curtain airbag sensor RH).

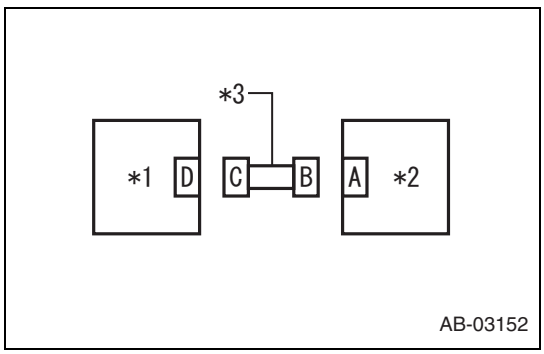

(1) Disconnect the connector (2V) in the test harness V from the connector of the side airbag sensor RH.
(2) Connect the connector B of the side airbag sensor RH and the connector (1AI) in the test harness AI.
(3) Connect the connector (2AI) in the test harness AI and the connector (1V) in the test harness V.
(4) Disconnect the connector (G14) from the curtain airbag sensor RH.
(5) Connect the connector (2V) in the test harness V to the connector C.
(6) Measure the resistance between the terminals.

Resistance

Inspection terminals	Inspection conditions	Standard value
(3V) No. 2 - (3V) No. 6	Always	Less than 10 Ω
(3V) No. 1 - (3V) No. 7	Always	Less than 10 Ω

Captions in illustration

*1	Curtain airbag sensor RH
*2	Side airbag sensor RH
*3	Airbag rear harness

NG → Replace the airbag rear harness along with the body harness.

OK

RS

8	Check airbag rear harness (between side airbag sensor RH and curtain airbag sensor RH).

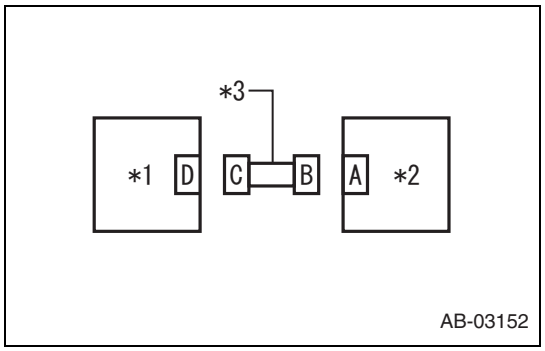

(1) Measure the resistance between the terminals.

Resistance

Inspection terminals	Inspection conditions	Standard value
(3V) No. 1 - chassis ground	Always	1 MΩ or more
(3V) No. 2 - chassis ground	Always	1 MΩ or more
(3V) No. 1 - (3V) No. 2	Always	1 MΩ or more

Captions in illustration

*1	Curtain airbag sensor RH
*2	Side airbag sensor RH
*3	Airbag rear harness

NG → Replace the airbag rear harness along with the body harness.

OK

9	Check airbag rear harness and door harness (between curtain airbag sensor RH and door sensor RH).

RS

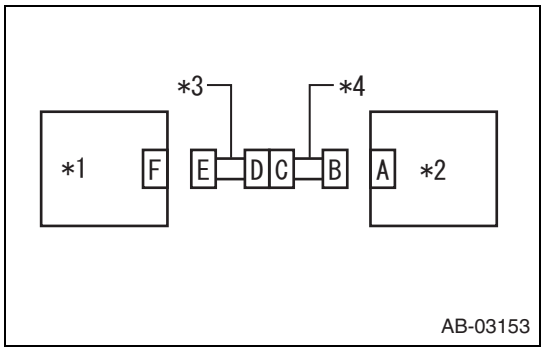

(1) Disconnect the connector (F2) from the front door impact sensor RH.
(2) Connect the connector (1H) in the test harness H to the connector E of the front door impact sensor RH.
(3) Measure the resistance between the terminals.

Resistance

Inspection terminals	Inspection conditions	Standard value
(3V) No. 4 - (3H) No. 5	Always	Less than 10 Ω
(3V) No. 5 - (3H) No. 6	Always	Less than 10 Ω

Captions in illustration

*1	Front door impact sensor RH
*2	Curtain airbag sensor RH
*3	Door harness
*4	Airbag rear harness

NG → Check the door harness, and if any fault is found, replace the harness. If there is no fault, replace the airbag rear harness along with the body harness.

OK

10	Check airbag rear harness and door harness (between curtain airbag sensor RH and door sensor RH).

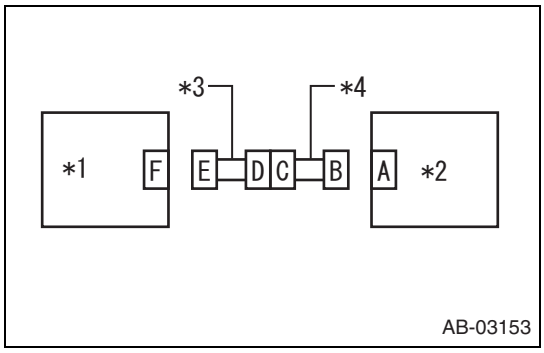

(1) Measure the resistance between the terminals.

Resistance

Inspection terminals	Inspection conditions	Standard value
(3V) No. 4 - chassis ground	Always	1 MΩ or more
(3V) No. 5 - chassis ground	Always	1 MΩ or more
(3V) No. 4 - (3V) No. 5	Always	1 MΩ or more

Captions in illustration

*1	Front door impact sensor RH
*2	Curtain airbag sensor RH
*3	Door harness
*4	Airbag rear harness

NG → Check the door harness, and if any fault is found, replace the harness. If there is no fault, replace the airbag rear harness along with the body harness.

OK

11	Check DTC

(1) Connect all connectors.
(2) Clear the memory.
(3) Perform the reproduction procedure.
(4) Read the DTC. (Current malfunction)
Criteria: DTC B1642 is not displayed.

NG → Go to Step 13.

OK

12	Check DTC

Criteria: No other DTC is displayed.

NG → Perform diagnosis for the displayed DTC.

OK

Complete

13	Check DTC

(1) Turn the ignition switch to OFF, disconnect the battery ground terminal, and wait for 60 seconds or more.
(2) Replace the side airbag sensor RH.
(3) Connect all connectors.

RS

(4) Clear the memory.
(5) Perform the reproduction procedure.
(6) Read the DTC. (Current malfunction)
Criteria: DTC B1642 is not displayed.

NG → Go to Step 15.

OK

14	Check DTC

Criteria: No other DTC is displayed.

NG → Perform diagnosis for the displayed DTC.

OK

Complete

15	Check DTC

(1) Turn the ignition switch to OFF, disconnect the battery ground terminal, and wait for 60 seconds or more.
(2) Replace the curtain airbag sensor RH.
(3) Connect all connectors.
(4) Clear the memory.
(5) Perform the reproduction procedure.
(6) Read the DTC. (Current malfunction)
Criteria: DTC B1642 is not displayed.

NG → Go to Step 17.

OK

16	Check DTC

Criteria: No other DTC is displayed.

NG → Perform diagnosis for the displayed DTC.

OK

Complete

17	Check DTC

(1) Turn the ignition switch to OFF, disconnect the battery ground terminal, and wait for 60 seconds or more.
(2) Replace the front door impact sensor RH.
(3) Connect all connectors.
(4) Clear the memory.
(5) Perform the reproduction procedure.
(6) Read the DTC. (Current malfunction)

Criteria: DTC B1642 is not displayed.

NG → Replace the airbag control module.

OK

18	Check DTC

Criteria: No other DTC is displayed.

NG → Perform diagnosis for the displayed DTC.

OK

Complete

DTC	B1647	Side Satellite Sensor Bus LH Lost Communication

Circuit description

DTC No.	DTC detected item	Faulty part
B1647	• Open or short circuit in harness of side sensor bus LH. • Side airbag sensor LH is faulty. • Curtain airbag sensor LH is faulty. • Front door impact sensor LH is faulty. • Airbag control module is faulty.	• Side airbag sensor LH • Curtain airbag sensor LH • Front door impact sensor LH • Airbag control module • Airbag rear harness

Circuit figure

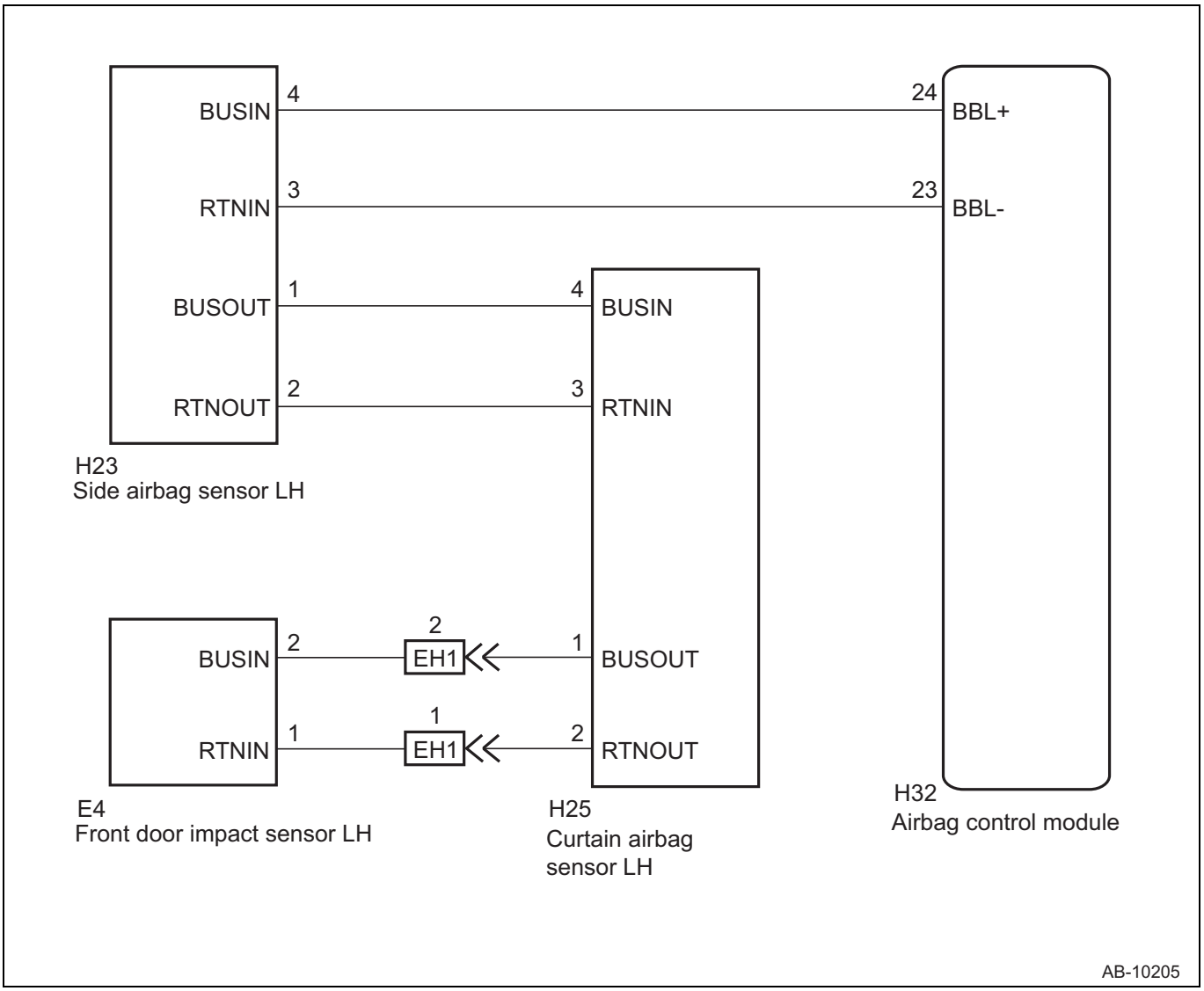

Inspection steps

CAUTION:

Before performing the diagnosis, refer to the precautions.

1	Check DTC

(1) Check for DTC.

Criteria: DTC B1627 and B1628 are not displayed.

NG → Perform diagnosis for the displayed DTC B1627 and B1628.

OK

2	Check DTC

(1) Check for DTC.

Criteria: DTC B1637 and B1638 are not displayed.

NG → Perform diagnosis for the displayed DTC B1637 and B1638.

OK

3	Check DTC

(1) Check for DTC.
Criteria: DTC B1697 and B1698 are not displayed.

NG → Perform diagnosis for the displayed DTC B1697 and B1698.

OK

4	Check poor contact of connectors.

(1) Check for poor contact of the connectors between the airbag control module and the front door impact sensor LH.
Criteria: No fault is found.

NG → Replace the airbag rear harness and the door harness.

OK

5	Check airbag rear harness (between airbag control module and side airbag sensor LH).

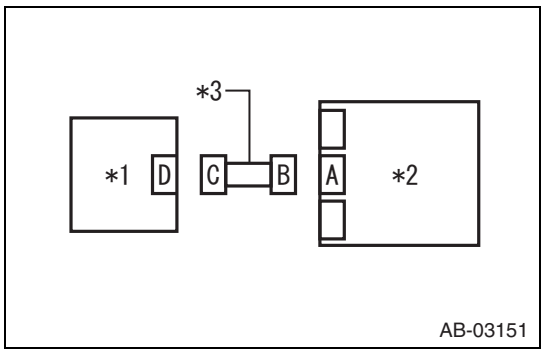

(1) Turn the ignition switch to OFF, disconnect the battery ground terminal, and wait for 60 seconds or more.
(2) Disconnect the connector (H22) from the seat belt pretensioner LH.
(3) Disconnect the connector (H30) from the curtain airbag module LH.
(4) Disconnect the connector (Hb1) of the side airbag module LH.
(5) Disconnect the connector (D27, G19, H32) of the airbag control module.
(6) Connect the connector (1AG) in the test harness AG to the connector B.
(7) Disconnect the connector (H23) from the side airbag sensor LH.
(8) Connect the connector in the test harness V to the connector C.
(9) Measure the resistance between the terminals.

Resistance

Inspection terminals	Inspection conditions	Standard value
(5AG) No. 10 - (3V) No. 1	Always	Less than 10 Ω
(5AG) No. 8 - (3V) No. 2	Always	Less than 10 Ω

Captions in illustration

*1	Side airbag sensor LH
*2	Airbag control module
*3	Airbag rear harness

NG → Replace the airbag rear harness along with the body harness.

RS

OK

6	Check airbag rear harness (between airbag control module and side airbag sensor LH).

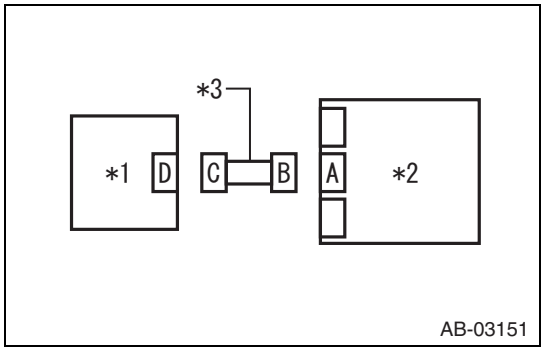

(1) Measure the resistance between the terminals.

Resistance

Inspection terminals	Inspection conditions	Standard value
(3V) No. 1 - chassis ground	Always	1 MΩ or more
(3V) No. 2 - chassis ground	Always	1 MΩ or more
(3V) No. 1 - (3V) No. 2	Always	1 MΩ or more

Captions in illustration

*1	Side airbag sensor LH
*2	Airbag control module
*3	Airbag rear harness

NG → Replace the airbag rear harness along with the body harness.

OK

RS

7	Check airbag rear harness (between side airbag sensor LH and curtain airbag sensor LH).

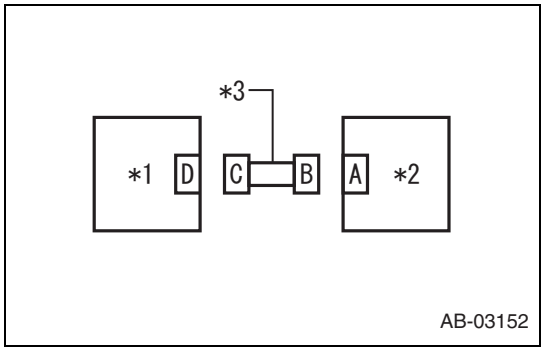

(1) Disconnect the connector (2V) in the test harness V from the connector of the side airbag sensor LH.
(2) Connect the connector B of the side airbag sensor LH and the connector (1AI) in the test harness AI.
(3) Connect the connector (2AI) in the test harness AI and the connector (1V) in the test harness V.
(4) Disconnect the connector (H25) from the curtain airbag sensor LH.
(5) Connect the connector (2V) in the test harness V to the connector C.
(6) Measure the resistance between the terminals.

Resistance

Inspection terminals	Inspection conditions	Standard value
(3V) No. 2 - (3V) No. 6	Always	Less than 10 Ω
(3V) No. 1 - (3V) No. 7	Always	Less than 10 Ω

Captions in illustration

*1	Curtain airbag sensor LH
*2	Side airbag sensor LH
*3	Airbag rear harness

NG → Replace the airbag rear harness along with the body harness.

OK

8	Check airbag rear harness (between side airbag sensor LH and curtain airbag sensor LH).

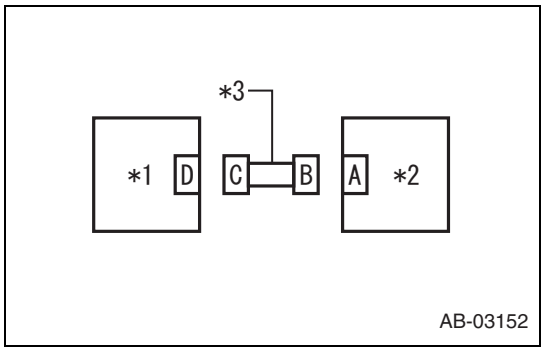

AB-03152

(1) Measure the resistance between the terminals.

Resistance

Inspection terminals	Inspection conditions	Standard value
(3V) No. 1 - chassis ground	Always	1 MΩ or more
(3V) No. 2 - chassis ground	Always	1 MΩ or more
(3V) No. 1 - (3V) No. 2	Always	1 MΩ or more

Captions in illustration

*1	Curtain airbag sensor LH
*2	Side airbag sensor LH
*3	Airbag rear harness

NG → Replace the airbag rear harness along with the body harness.

OK

9	Check airbag rear harness and door harness (between curtain airbag sensor LH and door sensor LH).

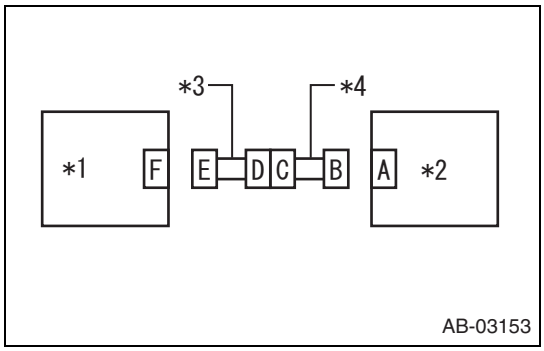

AB-03153

(1) Disconnect the connector (E4) from the front door impact sensor LH.
(2) Connect the connector (1H) in the test harness H to the connector E of the front door impact sensor LH.
(3) Measure the resistance between the terminals.

Resistance

Inspection terminals	Inspection conditions	Standard value
(3V) No. 4 - (3H) No. 5	Always	Less than 10 Ω
(3V) No. 5 - (3H) No. 6	Always	Less than 10 Ω

Captions in illustration

*1	Front door impact sensor LH
*2	Curtain airbag sensor LH
*3	Door harness
*4	Airbag rear harness

NG → Check the door harness, and if any fault is found, replace the harness. If there is no fault, replace the airbag rear harness along with the body harness.

OK

RS

10	Check airbag rear harness and door harness (between curtain airbag sensor LH and door sensor LH).

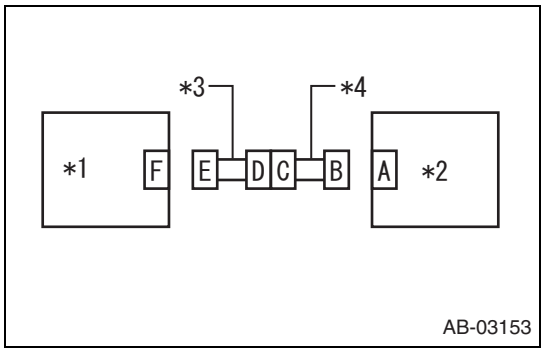

(1) Measure the resistance between the terminals.

Resistance

Inspection terminals	Inspection conditions	Standard value
(3V) No. 4 - chassis ground	Always	1 MΩ or more
(3V) No. 5 - chassis ground	Always	1 MΩ or more
(3V) No. 4 - (3V) No. 5	Always	1 MΩ or more

Captions in illustration

*1	Front door impact sensor LH
*2	Curtain airbag sensor LH
*3	Door harness
*4	Airbag rear harness

NG → Check the door harness, and if any fault is found, replace the harness. If there is no fault, replace the airbag rear harness along with the body harness.

OK

RS

11	Check DTC

(1) Connect all connectors.
(2) Clear the memory.
(3) Perform the reproduction procedure.
(4) Read the DTC. (Current malfunction)
Criteria: DTC B1647 is not displayed.

NG → Go to Step 13.

OK

12	Check DTC

Criteria: No other DTC is displayed.

NG → Perform diagnosis for the displayed DTC.

OK

Complete

13	Check DTC

(1) Turn the ignition switch to OFF, disconnect the battery ground terminal, and wait for 60 seconds or more.
(2) Replace the side airbag sensor LH.
(3) Connect all connectors.

(4) Clear the memory.
(5) Perform the reproduction procedure.
(6) Read the DTC. (Current malfunction)
Criteria: DTC B1647 is not displayed.

NG → Go to Step 15.

OK

14	Check DTC

Criteria: No other DTC is displayed.

NG → Perform diagnosis for the displayed DTC.

OK

Complete

15	Check DTC

(1) Turn the ignition switch to OFF, disconnect the battery ground terminal, and wait for 60 seconds or more.
(2) Replace the curtain airbag sensor LH.
(3) Connect all connectors.
(4) Clear the memory.
(5) Perform the reproduction procedure.
(6) Read the DTC. (Current malfunction)
Criteria: DTC B1647 is not displayed.

NG → Go to Step 17.

OK

16	Check DTC

Criteria: No other DTC is displayed.

NG → Perform diagnosis for the displayed DTC.

OK

Complete

17	Check DTC

(1) Turn the ignition switch to OFF, disconnect the battery ground terminal, and wait for 60 seconds or more.
(2) Replace the front door impact sensor LH.
(3) Connect all connectors.
(4) Clear the memory.
(5) Perform the reproduction procedure.
(6) Read the DTC. (Current malfunction)

Criteria: DTC B1647 is not displayed.

NG → Replace the airbag control module.

OK

18	Check DTC

Criteria: No other DTC is displayed.

NG → Perform diagnosis for the displayed DTC.

OK

Complete

DTC	B1660	Passenger's Airbag Indicator Failure

Circuit description

DTC No.	DTC detected item	Faulty part
B1660	• Passenger's airbag indicator is faulty. • Airbag control module is faulty. • Open or short circuit in airbag main harness. • Open circuit in body harness.	• Passenger's airbag indicator (clock ASSY) • Airbag control module • Airbag main harness • Body harness

Circuit figure

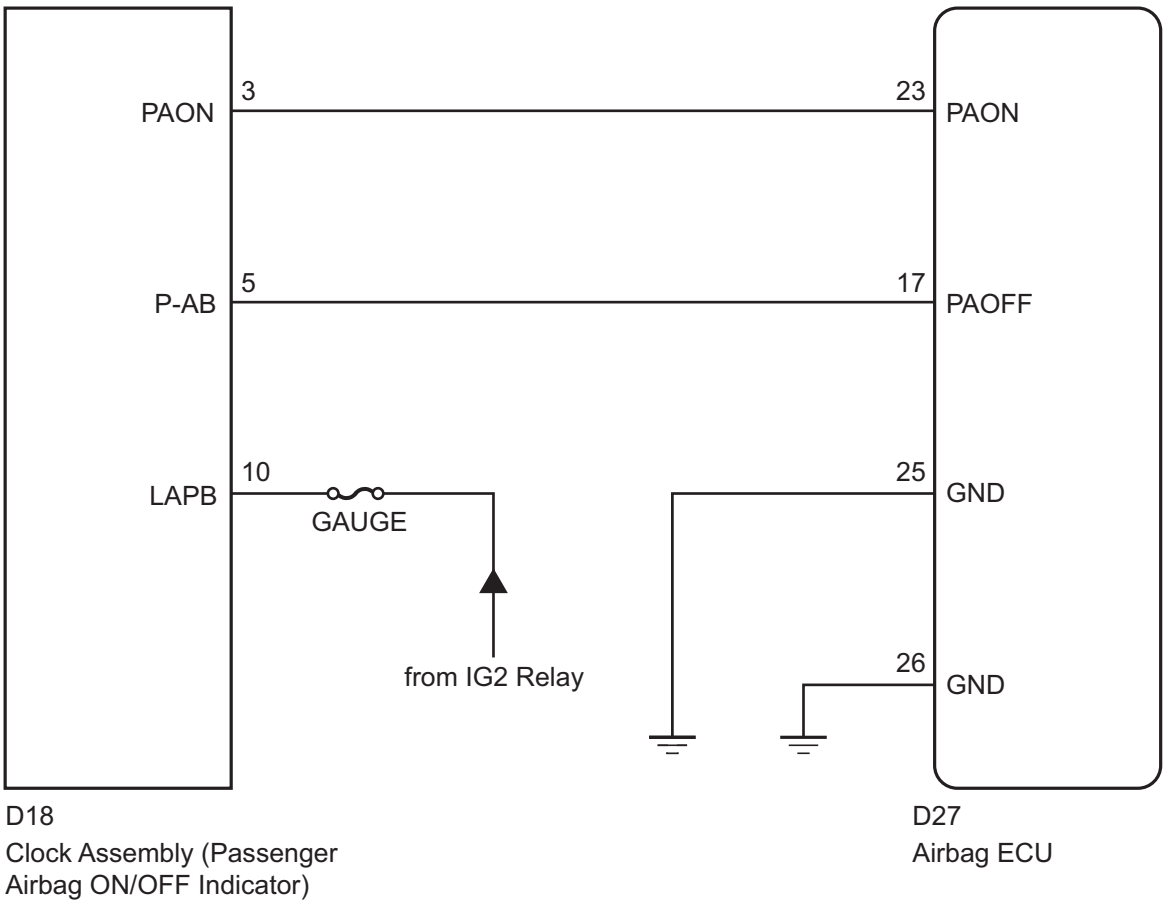

Inspection steps

CAUTION:

Before performing the diagnosis, refer to the precautions.

1	Check poor contact of connectors.

(1) Turn the ignition switch to OFF, disconnect the battery ground terminal, and wait for 60 seconds or more.

(2) Check whether the connectors between the airbag control module and the airbag indicator are securely connected.

Criteria: No fault is found.

NG → Repair the bulkhead harness. Or replace the airbag main harness along with the body harness.

OK

2	Check airbag main harness.

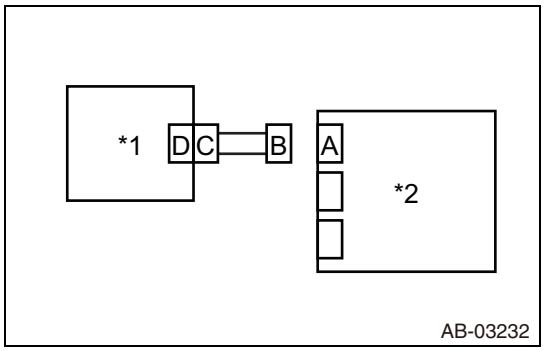

(1) Disconnect the connector (D27, G19, H32) from the airbag control module.
(2) Connect the battery ground terminal and turn the ignition switch to ON.
NOTE:
In the normal condition, neither ON nor OFF will illuminate.
Criteria: The passenger's airbag indicator illuminates.

Captions in illustration

*1	Clock ASSY
*2	Airbag control module

NG → Go to Step 4.

OK

3	Check airbag main harness.

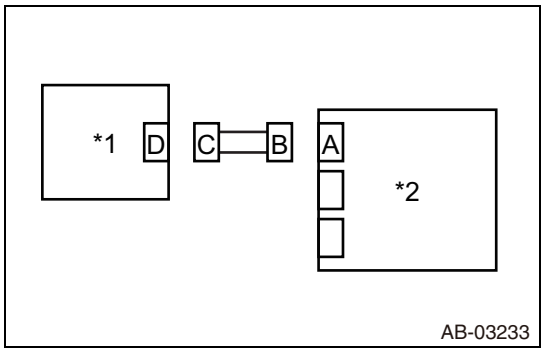

(1) Turn the ignition switch to OFF, disconnect the battery ground terminal, and wait for 60 seconds or more.
(2) Remove the clock ASSY and disconnect the connector (D18).
(3) Disconnect the connector (D27, G19, H32) from the airbag control module, and connect the connector (1AG) in the test harness AG.
(4) Measure the resistance between the terminals.

Resistance

Inspection terminals	Inspection conditions	Standard value
(2AG) No. 9 - (2AG) No. 8	Always	1 MΩ or more
(2AG) No. 9 - chassis ground	Always	1 MΩ or more
(2AG) No. 8 - chassis ground	Always	1 MΩ or more

Captions in illustration

*1	Clock ASSY
*2	Airbag control module

NG → Repair the bulkhead harness. Or replace the airbag main harness along with the body harness.

OK

Replace the clock ASSY

RS

4	Check airbag main harness.

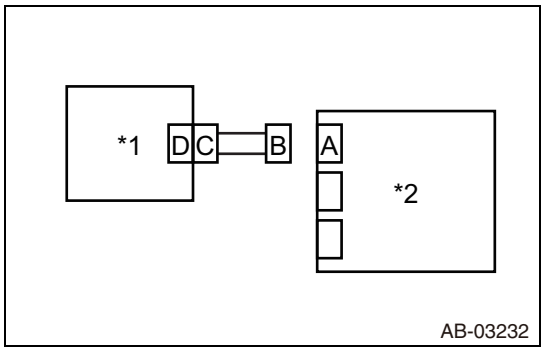

(1) Turn the ignition switch to OFF, disconnect the battery ground terminal, and wait for 60 seconds or more.
(2) Disconnect the connector (D27, G19, H32) from the airbag control module, and connect the connector (1AG) in the test harness AG.
(3) Connect the connectors (7AG) and (8AG) in the test harness AG.
(4) Connect the battery ground terminal and turn the ignition switch to ON.
Criteria: The passenger's airbag indicator illuminates.

Captions in illustration

*1	Clock ASSY
*2	Airbag control module

NG → Go to Step 5.

OK →

Replace the airbag control module.

5	Check airbag main harness.

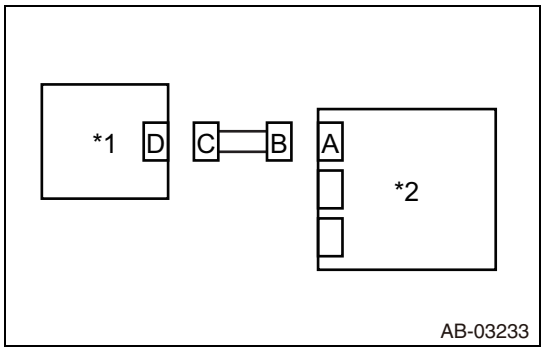

(1) Turn the ignition switch to OFF, disconnect the battery ground terminal, and wait for 60 seconds or more.
(2) Remove the clock ASSY and disconnect the connector (D18).
(3) Measure the resistance between the connector (2AG) in the test harness AG and the connector (D18).

Resistance

Inspection terminals	Inspection conditions	Standard value
(2AG) No. 9 - (D18) No. 5	Always	Less than 1 Ω
(2AG) No. 8 - (D18) No. 3	Always	Less than 1 Ω

Captions in illustration

*1	Clock ASSY
*2	Airbag control module

NG → Repair the bulkhead harness. Or replace the airbag main harness along with the body harness.

OK →

RS

6	Check body harness.

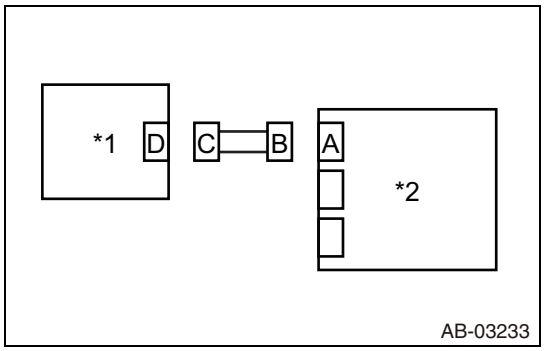

(1) Turn the ignition switch to ON.
(2) Measure the voltage between the connector (D18) and the chassis ground.

Voltage

Inspection terminals	Inspection conditions	Standard value
(D18) No. 10 - chassis ground	Always	10 V or more

Captions in illustration

*1	Clock ASSY
*2	Airbag control module

NG → Check the power circuit.

OK

Replace the clock ASSY

DTC B1675 Satellite Safing Sensor Failure

RS

Circuit description

DTC No.	DTC detected item	Faulty part
B1675	• Satellite safing sensor is faulty. • Airbag control module is faulty.	• Satellite safing sensor • Airbag control module

Inspection steps

CAUTION:

Before performing the diagnosis, refer to the precautions.

1	Replace satellite safing sensor.

(1) Turn the ignition switch to OFF, disconnect the battery ground terminal, and wait for 60 seconds or more.
(2) Replace the satellite safing sensor with a genuine sensor.
(3) Turn the ignition switch to ON.
Criteria: The warning light is turned off.

NG → Replace the airbag control module.

OK

Complete

DTC	B1678	Lost Communication With Satellite Safing Sensor

DTC	B1679	Satellite Safing Sensor Initialization Incomplete

Circuit description

DTC No.	DTC detected item	Faulty part
B1678 B1679	• Open or short circuit in harness of satellite safing sensor. • Satellite safing sensor is faulty. • Airbag control module is faulty.	• Satellite safing sensor is faulty. • Airbag control module • Airbag rear harness

Circuit figure

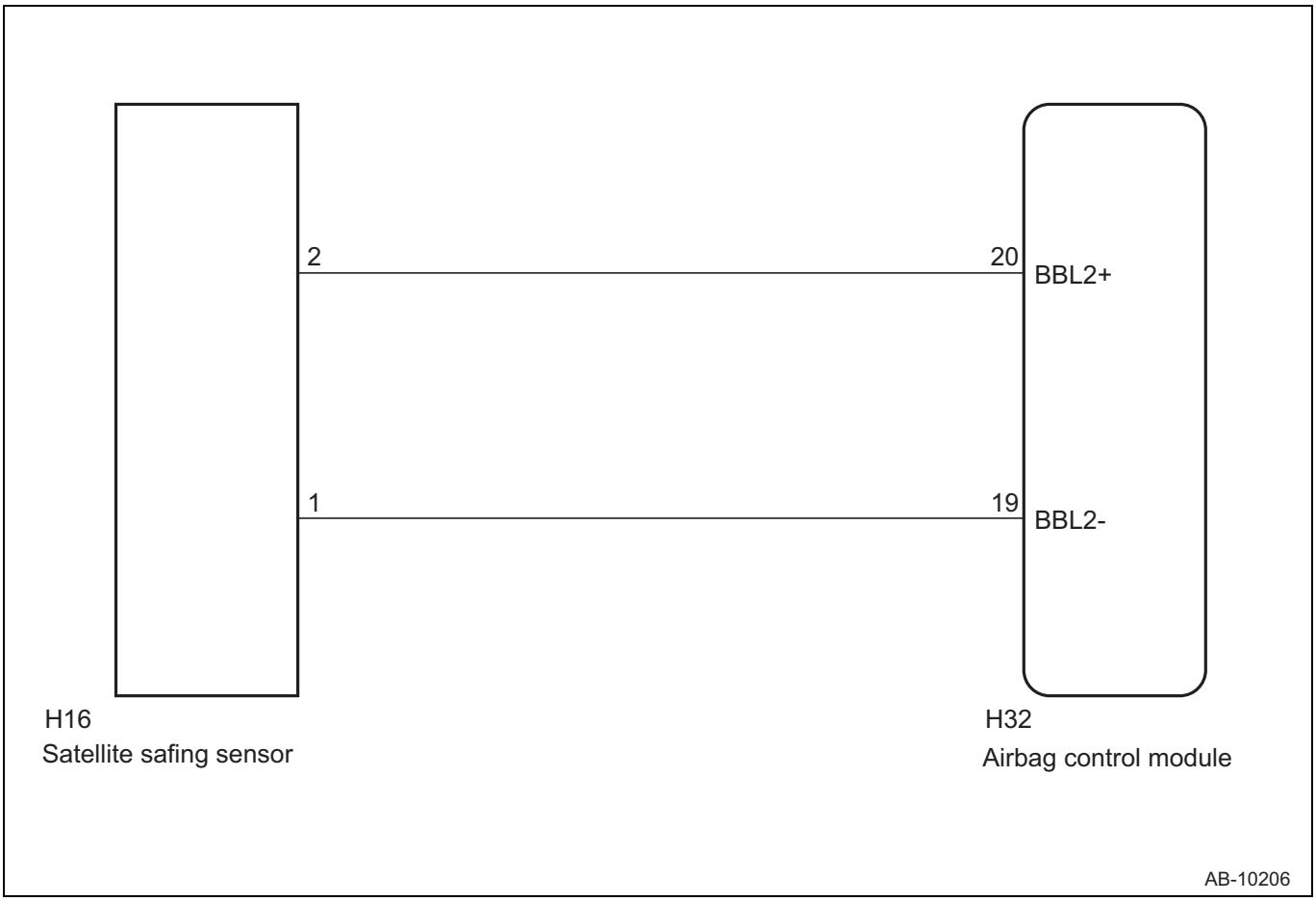

Inspection steps

CAUTION:

Before performing the diagnosis, refer to the precautions.

1	Check poor contact of connectors.

(1) Check for poor contact of the connectors between the airbag control module and the satellite safing sensor.

Criteria: No fault is found.

NG → Replace the airbag rear harness along with the body harness.

OK

2	Check airbag rear harness (between airbag control module and satellite safing sensor).

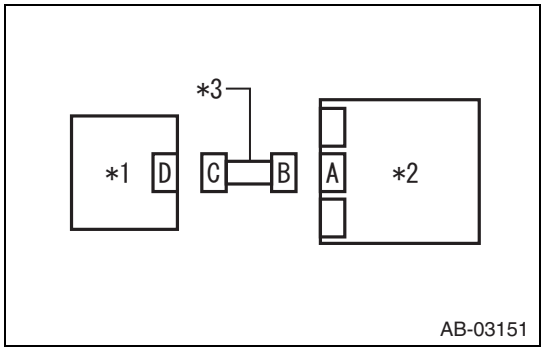

(1) Turn the ignition switch to OFF, disconnect the battery ground terminal, and wait for 60 seconds or more.
(2) Disconnect the connector (G17, H22) from the seat belt pretensioner.
(3) Disconnect the connector (G11, H30) from the curtain airbag module.
(4) Disconnect the connector (Gc1, Hb1) from the side airbag module.
(5) Disconnect the connector (D27, G19, H32) from the airbag control module.
(6) Connect the connector (1AG) in the test harness AG to the connector B.
(7) Disconnect the connector (H16) from the satellite safing sensor.
(8) Connect the connector (1H) in the test harness H to the connector C.
(9) Measure the resistance between the terminals.

Resistance

Inspection terminals	Inspection conditions	Standard value
(5AG) No. 9 - (3H) No. 5	Always	Less than 10 Ω
(6AG) No. 13 - (3H) No. 6	Always	Less than 10 Ω

Captions in illustration

*1	Satellite safing sensor
*2	Airbag control module
*3	Airbag rear harness

RS

NG → Replace the airbag rear harness along with the body harness.

OK

3	Check airbag rear harness (between airbag control module and satellite safing sensor).

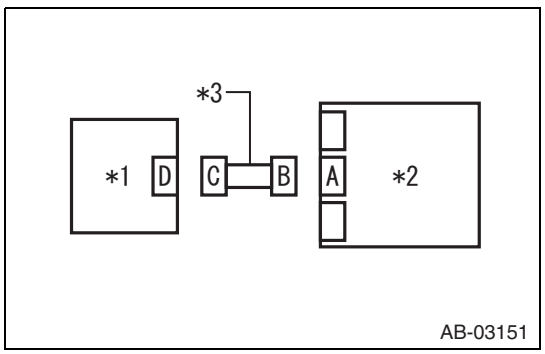

(1) Measure the resistance between the terminals.

Resistance

Inspection terminals	Inspection conditions	Standard value
(5AG) No. 9 - chassis ground	Always	1 MΩ or more
(6AG) No. 13 - chassis ground	Always	1 MΩ or more
(5AG) No. 9 - (6AG) No. 13	Always	1 MΩ or more

Captions in illustration

*1	Satellite safing sensor
*2	Airbag control module
*3	Airbag rear harness

NG → Replace the airbag rear harness along with the body harness.

OK

4	Check DTC

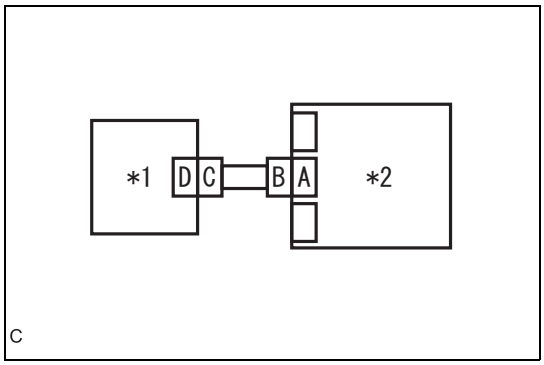

(1) Connect all connectors.
(2) Clear the memory.
(3) Perform the reproduction procedure.
(4) Read the DTC. (Current malfunction)
Criteria: DTC B1679 is not displayed.

Captions in illustration

*1	Satellite safing sensor
*2	Airbag control module

NG → Go to Step 6.

OK

5	Check DTC

Criteria: No other DTC is displayed.

NG → Perform diagnosis for the displayed DTC.

OK

Complete

6	Check DTC

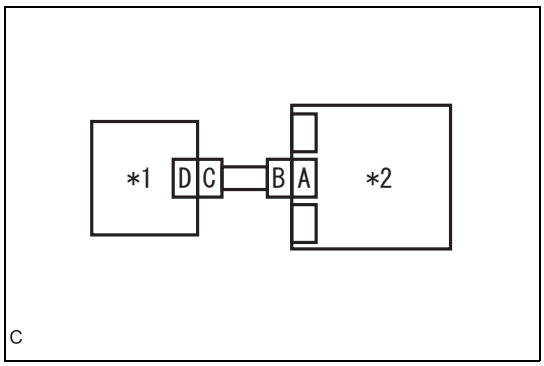

(1) Turn the ignition switch to OFF, disconnect the battery ground terminal, and wait for 60 seconds or more.
(2) Replace the satellite safing sensor.
(3) Connect all connectors.
(4) Clear the memory.
(5) Perform the reproduction procedure.
(6) Read the DTC. (Current malfunction)
Criteria: DTC B1679 is not displayed.

Captions in illustration

*1	Satellite safing sensor
*2	Airbag control module

NG → Replace the airbag control module.

OK

7	Check DTC

Criteria: No other DTC is displayed.

NG → Perform diagnosis for the displayed DTC.

RS

OK

Complete

DTC	B16F8	Satellite Safing Sensor Recognition Error

Circuit description

DTC No.	DTC detected item	Faulty part
B16F8	• Satellite safing sensor is installed incorrectly. • Airbag control module is faulty.	• Satellite safing sensor • Airbag control module

Inspection steps
CAUTION:
Before performing the diagnosis, refer to the precautions.

1	Replace satellite safing sensor.

(1) Turn the ignition switch to OFF, disconnect the battery ground terminal, and wait for 60 seconds or more.
(2) Replace the satellite safing sensor with a genuine sensor.
(3) Turn the ignition switch to ON.
Criteria: The warning light is turned off.

RS

NG → Replace the airbag control module.

OK

Complete

DTC	B16F9	Door Sensor RH Recognition Error

Circuit description

DTC No.	DTC detected item	Faulty part
B16F9	• Front door impact sensor RH is installed incorrectly. • Airbag control module is faulty.	• Front door impact sensor RH • Airbag control module

Inspection steps
CAUTION:
Before performing the diagnosis, refer to the precautions.

1	Replace front door impact sensor RH.

(1) Turn the ignition switch to OFF, disconnect the battery ground terminal, and wait for 60 seconds or more.
(2) Replace the front door impact sensor RH with a genuine sensor.
(3) Turn the ignition switch to ON.
Criteria: The warning light is turned off.

NG → Replace the airbag control module.

OK

Complete

DTC	B1690	Door Sensor RH Failure

Circuit description

DTC No.	DTC detected item	Faulty part
B1690	Front door impact sensor RH is faulty.	Front door impact sensor RH

Inspection steps

The circuit within the front door impact sensor RH is faulty. Replace the front door impact sensor RH.

DTC	B1692	Lost Communication With Door Sensor RH

DTC	B1693	Door Sensor RH Initialization Incomplete

Circuit description

DTC No.	DTC detected item	Faulty part
B1692 B1693	• Open or short circuit in harness of side sensor bus RH. • Side airbag sensor RH is faulty. • Front door impact sensor RH is faulty. • Curtain airbag sensor RH is faulty. • Airbag control module is faulty.	• Front door impact sensor RH • Curtain airbag sensor RH • Airbag control module • Airbag rear harness • Side airbag sensor RH

Circuit figure

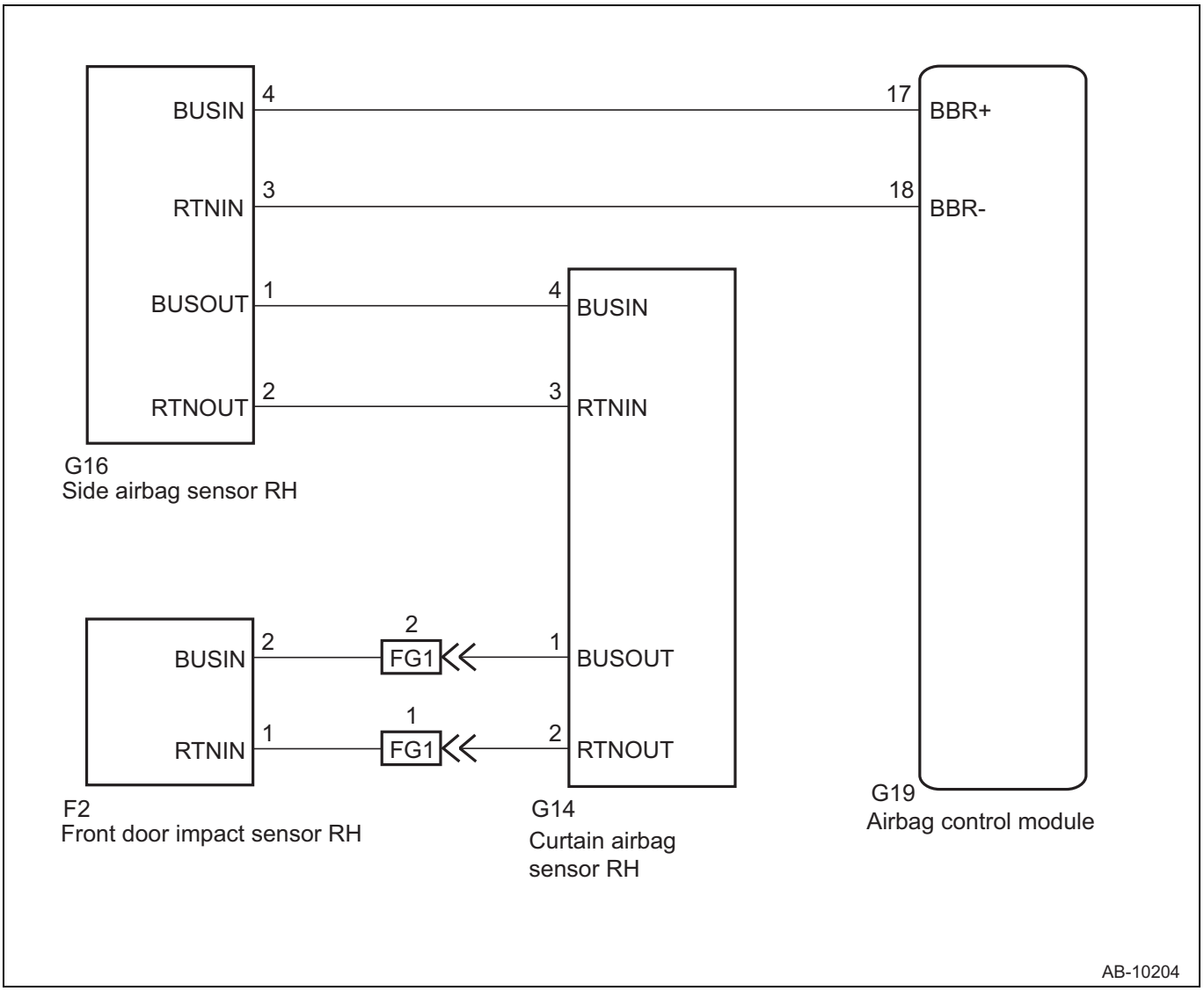

RS

Inspection steps

CAUTION:

Before performing the diagnosis, refer to the precautions.

1	Check DTC

(1) Check for DTC.

Criteria: DTC B1622 and B1623 are not displayed.

NG → Perform diagnosis for the displayed DTC B1622 and B1623.

OK

2	Check DTC

(1) Check for DTC.

Criteria: DTC B1632 and B1633 are not displayed.

NG → Perform diagnosis for the displayed DTC B1632 and B1633.

OK

3	Check poor contact of connectors.

(1) Check for poor contact of the connectors between the airbag control module and the front door impact sensor RH.
Criteria: No fault is found.

NG → Replace the airbag rear harness and the door harness.

OK

4	Check airbag rear harness and door harness (between curtain airbag sensor RH and door sensor RH).

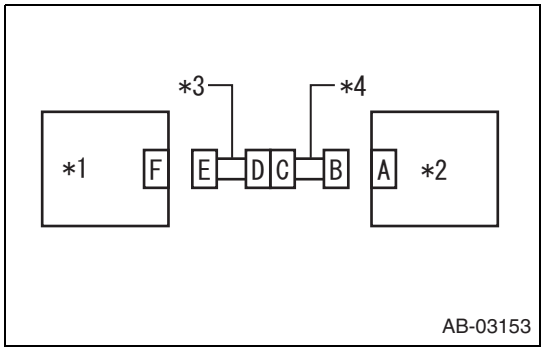

(1) Turn the ignition switch to OFF, disconnect the battery ground terminal, and wait for 60 seconds or more.
(2) Disconnect the connector (G17) from the seat belt pretensioner RH.
(3) Disconnect the connector (G11) from the curtain airbag module RH.
(4) Disconnect the connector (Gc1) of the side airbag module RH.
(5) Disconnect the connector (G14) from the curtain airbag sensor RH.
(6) Connect the connector B of the curtain airbag sensor RH and the connector (2V) in the test harness V.
(7) Disconnect the connector (F2) of the front door impact sensor RH.
(8) Connect the connector E of the front door impact sensor RH and the connector (1H) in the test harness H.
(9) Measure the resistance between the terminals.

Resistance

Inspection terminals	Inspection conditions	Standard value
(3V) No. 4 - (3H) No. 5	Always	Less than 10 Ω
(3V) No. 5 - (3H) No. 6	Always	Less than 10 Ω

Captions in illustration

*1	Front door impact sensor RH
*2	Curtain airbag sensor RH
*3	Door harness
*4	Airbag rear harness

NG → Check the door harness, and if any fault is found, replace the harness. If there is no fault, replace the airbag rear harness along with the body harness.

OK

RS

5	Check airbag rear harness and door harness (between curtain airbag sensor RH and door sensor RH).

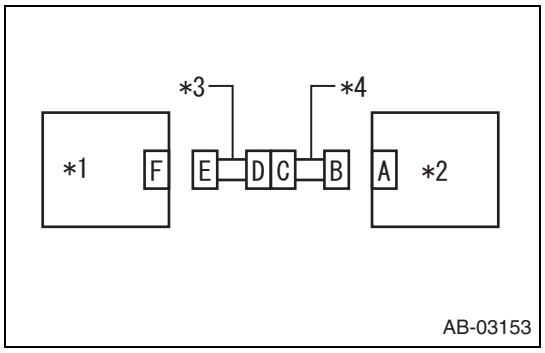

(1) Measure the resistance between the terminals.

Resistance

Inspection terminals	Inspection conditions	Standard value
(3V) No. 4 - chassis ground	Always	1 MΩ or more
(3V) No. 5 - chassis ground	Always	1 MΩ or more
(3V) No. 4 - (3V) No. 5	Always	1 MΩ or more

Captions in illustration

*1	Front door impact sensor RH
*2	Curtain airbag sensor RH
*3	Door harness
*4	Airbag rear harness

NG → Check the door harness, and if any fault is found, replace the harness. If there is no fault, replace the airbag rear harness along with the body harness.

OK

RS

6	Check DTC

(1) Connect all connectors.
(2) Clear the memory.
(3) Perform the reproduction procedure.
(4) Read the DTC. (Current malfunction)
Criteria: DTC B1693 is not displayed.

NG → Go to Step 8.

OK

7	Check DTC

Criteria: No other DTC is displayed.

NG → Perform diagnosis for the displayed DTC.

OK

Complete

8	Check DTC

(1) Turn the ignition switch to OFF, disconnect the battery ground terminal, and wait for 60 seconds or more.
(2) Replace the front door impact sensor RH.
(3) Connect all connectors.

(4) Clear the memory.
(5) Perform the reproduction procedure.
(6) Read the DTC. (Current malfunction)
Criteria: DTC B1693 is not displayed.

NG → Go to Step 10.

OK

9	Check DTC

Criteria: No other DTC is displayed.

NG → Perform diagnosis for the displayed DTC.

OK

Complete

10	Check DTC

(1) Turn the ignition switch to OFF, disconnect the battery ground terminal, and wait for 60 seconds or more.
(2) Replace the curtain airbag sensor RH.
(3) Connect all connectors.
(4) Clear the memory.
(5) Perform the reproduction procedure.
(6) Read the DTC. (Current malfunction)
Criteria: DTC B1693 is not displayed.

NG → Replace the airbag control module.

OK

11	Check DTC

Criteria: No other DTC is displayed.

NG → Perform diagnosis for the displayed DTC.

OK

Complete

DTC B16FA Door Sensor LH Recognition Error

Circuit description

DTC No.	DTC detected item	Faulty part
B16FA	• Front door impact sensor LH is installed incorrectly. • Airbag control module is faulty.	• Front door impact sensor LH • Airbag control module

Inspection steps
CAUTION:
Before performing the diagnosis, refer to the precautions.

1	Replace front door impact sensor LH.

(1) Turn the ignition switch to OFF, disconnect the battery ground terminal, and wait for 60 seconds or more.
(2) Replace the front door impact sensor LH with a genuine sensor.
(3) Turn the ignition switch to ON.
Criteria: The warning light is turned off.

NG → Replace the airbag control module.

OK

Complete

DTC	B1695	Door Sensor LH Failure

Circuit description

DTC No.	DTC detected item	Faulty part
B1695	Front door impact sensor LH is faulty.	Front door impact sensor LH

RS

Inspection steps
The circuit within the front door impact sensor LH is faulty. Replace the front door impact sensor LH.

DTC	B1697	Lost Communication With Door Sensor LH

DTC	B1698	Door Sensor LH Initialization Incomplete

Circuit description

DTC No.	DTC detected item	Faulty part
B1697 B1698	• Open or short circuit in harness of side sensor bus LH. • Side airbag sensor LH is faulty. • Front door impact sensor LH is faulty. • Curtain airbag sensor LH is faulty. • Airbag control module is faulty.	• Front door impact sensor LH • Curtain airbag sensor LH • Airbag control module • Airbag rear harness • Side airbag sensor LH

Circuit figure

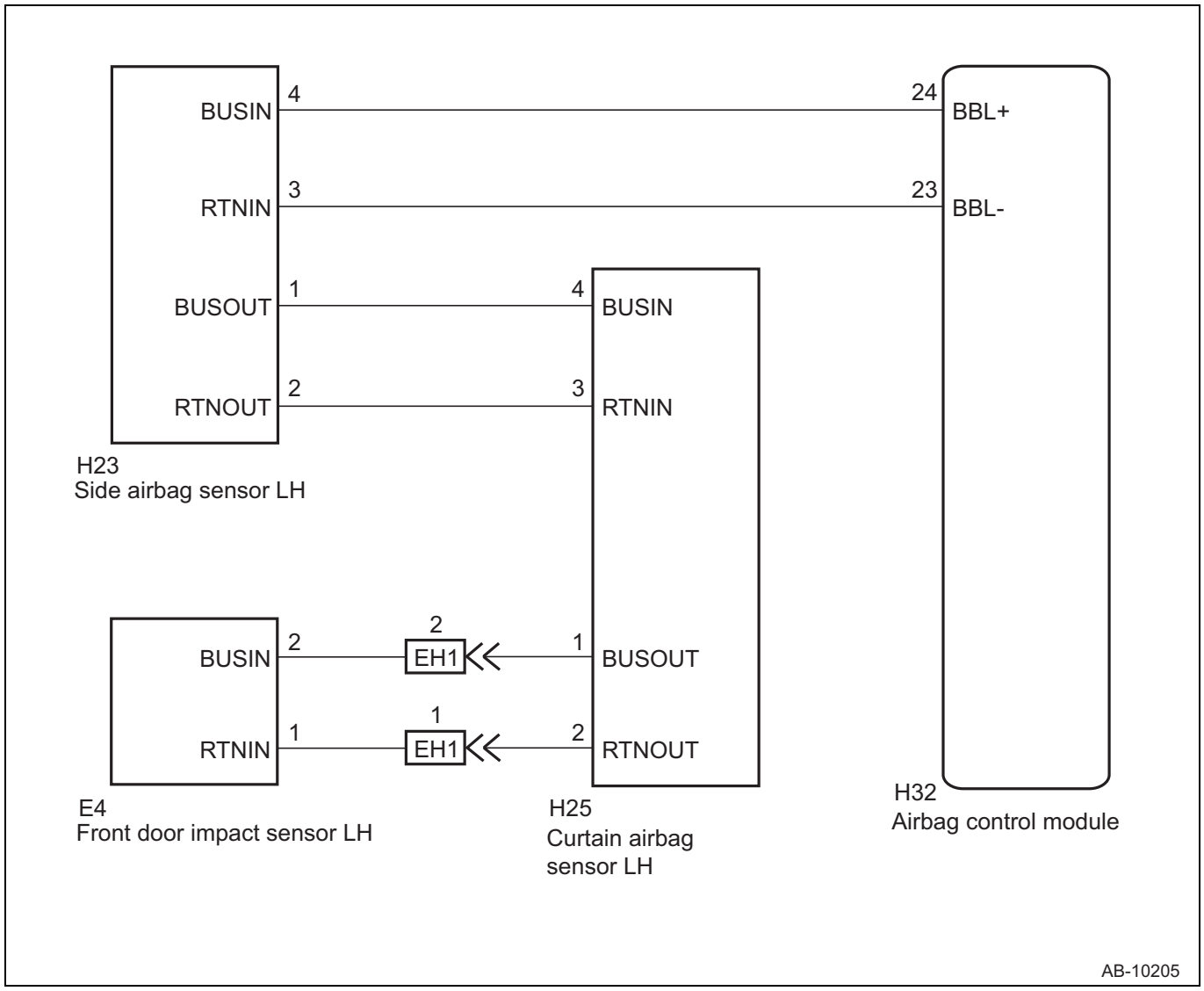

Inspection steps

CAUTION:

Before performing the diagnosis, refer to the precautions.

1	Check DTC

(1) Check for DTC.

Criteria: DTC B1627 and B1628 are not displayed.

NG → Perform diagnosis for the displayed DTC B1627 and B1628.

OK

2	Check DTC

(1) Check for DTC.

Criteria: DTC B1637 and B1638 are not displayed.

NG → Perform diagnosis for the displayed DTC B1637 and B1638.

OK

3	Check poor contact of connectors.

(1) Check for poor contact of the connectors between the airbag control module and the front door impact sensor LH.
Criteria: No fault is found.

NG → Replace the airbag rear harness and the door harness.

OK

4	Check airbag rear harness and door harness (between curtain airbag sensor LH and door sensor LH).

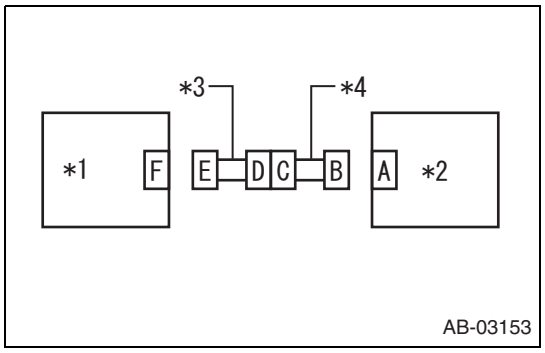

(1) Turn the ignition switch to OFF, disconnect the battery ground terminal, and wait for 60 seconds or more.
(2) Disconnect the connector (H22) from the seat belt pretensioner LH.
(3) Disconnect the connector (H30) from the curtain airbag module LH.
(4) Disconnect the connector (Hb1) of the side airbag module LH.
(5) Disconnect the connector (H25) from the curtain airbag sensor LH.
(6) Connect the connector B of the curtain airbag sensor LH and the connector (2V) in the test harness V.
(7) Disconnect the connector (E4) of the front door impact sensor LH.
(8) Connect the connector E of the front door impact sensor LH and the connector (1H) in the test harness H.
(9) Measure the resistance between the terminals.

Resistance

Inspection terminals	Inspection conditions	Standard value
(3V) No. 4 - (3H) No. 5	Always	Less than 10 Ω
(3V) No. 5 - (3H) No. 6	Always	Less than 10 Ω

Captions in illustration

*1	Front door impact sensor LH
*2	Curtain airbag sensor LH
*3	Door harness
*4	Airbag rear harness

NG → Check the door harness, and if any fault is found, replace the harness. If there is no fault, replace the airbag rear harness along with the body harness.

OK

RS

5	Check airbag rear harness and door harness (between curtain airbag sensor LH and door sensor LH).

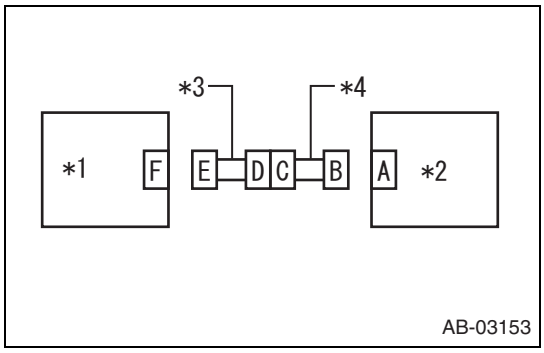

(1) Measure the resistance between the terminals.

Resistance

Inspection terminals	Inspection conditions	Standard value
(3V) No. 4 - chassis ground	Always	1 MΩ or more
(3V) No. 5 - chassis ground	Always	1 MΩ or more
(3V) No. 4 - (3V) No. 5	Always	1 MΩ or more

Captions in illustration

*1	Front door impact sensor LH
*2	Curtain airbag sensor LH
*3	Door harness
*4	Airbag rear harness

NG → Check the door harness, and if any fault is found, replace the harness. If there is no fault, replace the airbag rear harness along with the body harness.

OK

6	Check DTC

(1) Connect all connectors.
(2) Clear the memory.
(3) Perform the reproduction procedure.
(4) Read the DTC. (Current malfunction)
Criteria: DTC B1698 is not displayed.

NG → Go to Step 8.

OK

7	Check DTC

Criteria: No other DTC is displayed.

NG → Perform diagnosis for the displayed DTC.

OK

Complete

8	Check DTC

(1) Turn the ignition switch to OFF, disconnect the battery ground terminal, and wait for 60 seconds or more.
(2) Replace the front door impact sensor LH.
(3) Connect all connectors.

RS

(4) Clear the memory.
(5) Perform the reproduction procedure.
(6) Read the DTC. (Current malfunction)
Criteria: DTC B1698 is not displayed.

NG → Go to Step 10.

OK

9	Check DTC

Criteria: No other DTC is displayed.

NG → Perform diagnosis for the displayed DTC.

OK

Complete

10	Check DTC

(1) Turn the ignition switch to OFF, disconnect the battery ground terminal, and wait for 60 seconds or more.
(2) Replace the curtain airbag sensor LH.
(3) Connect all connectors.
(4) Clear the memory.
(5) Perform the reproduction procedure.
(6) Read the DTC. (Current malfunction)
Criteria: DTC B1698 is not displayed.

NG → Replace the airbag control module.

OK

11	Check DTC

Criteria: No other DTC is displayed.

NG → Perform diagnosis for the displayed DTC.

OK

Complete

DTC	B1800	Short in Driver's Airbag

Circuit description

DTC No.	DTC detected item	Faulty part
B1800	• Airbag main harness circuit is shorted. • Airbag module harness (driver's side) circuit is shorted. • Roll connector circuit is shorted. • Driver's airbag module is faulty. • Airbag control module is faulty.	• Driver side air bag module • Airbag control module • Airbag main harness • Roll connector

Circuit figure

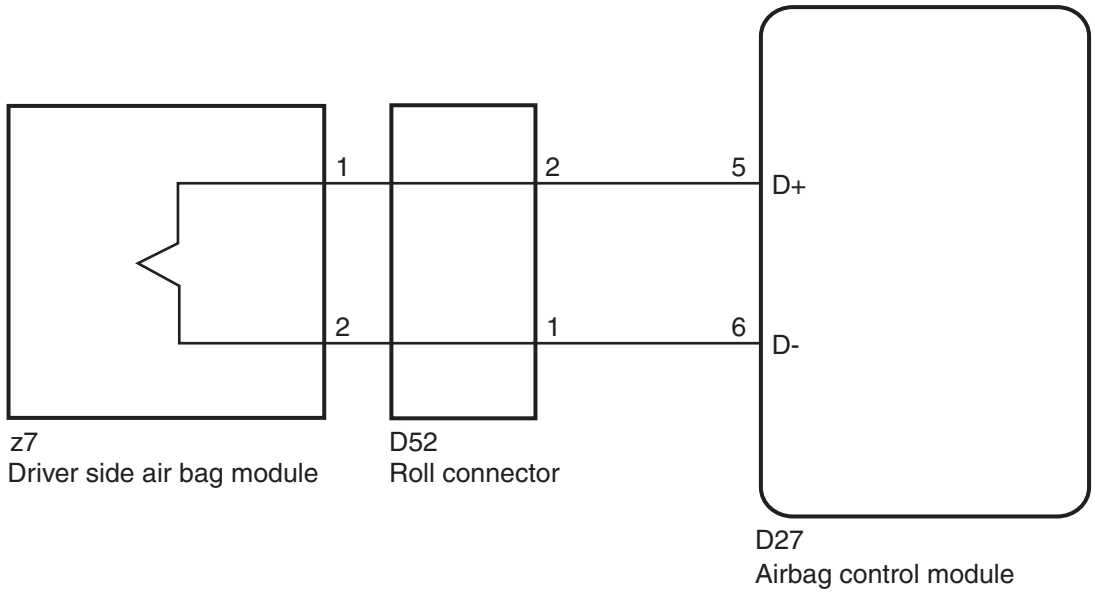

Inspection steps

CAUTION:

Before performing the diagnosis, refer to the precautions.

1	Check poor contact of connectors.

(1) Check for poor contact of the connectors between the airbag control module and the driver's airbag module.

Criteria: No fault is found.

NG → Replace the airbag main harness along with the body harness.

OK

2	Check driver's airbag module.

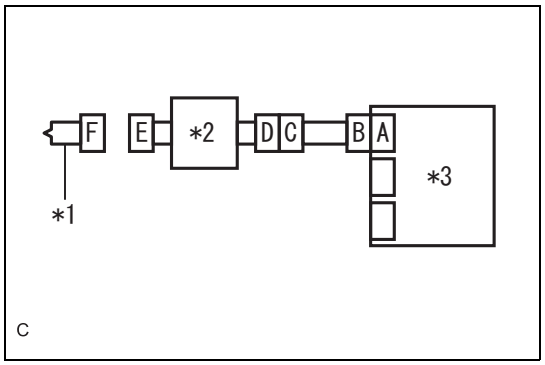

(1) Turn the ignition switch to OFF, disconnect the battery ground terminal, and wait for 60 seconds or more.
(2) Disconnect the connector (z7) from the driver's airbag module.
(3) Connect the connector (1Q) in the test harness Q to the connector E.
(4) Connect the airbag resistor to the connector (2Q) in the test harness Q.
(5) Connect the battery ground terminal and turn the ignition switch to ON.
Criteria: Airbag warning light remains on even after 6 seconds have passed.

Captions in illustration

*1	Driver side air bag module
*2	Roll connector
*3	Airbag control module

NG → Replace the driver's airbag module.

OK

3	Check roll connector and airbag main harness (driver's airbag harness).

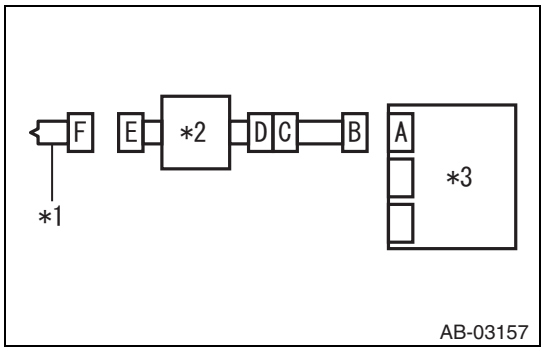

(1) Turn the ignition switch to OFF, disconnect the battery ground terminal, and wait for 60 seconds or more.
(2) Disconnect the passenger's airbag module connector (D30).
(3) Disconnect the airbag resistor from the connector (2Q) in the test harness Q.
(4) Disconnect the connector (D27, G19, H32) from the airbag control module, and connect the connector (1AG) in the test harness AG.
(5) Measure the resistance between the terminals.

Resistance

Inspection terminals	Inspection conditions	Standard value
(2Q) No. 1 - (2Q) No. 2	Always	1 MΩ or more

Captions in illustration

*1	Driver side air bag module
*2	Roll connector
*3	Airbag control module

NG → Go to Step 6.

OK

4	Check DTC

(1) Connect all connectors.
(2) Clear the memory.
(3) Perform the reproduction procedure.
(4) Read the DTC. (Current malfunction)
Criteria: DTC B1800 is not displayed.

NG → Replace the airbag control module.

OK

5	Check DTC

Criteria: No other DTC is displayed.

NG → Perform diagnosis for the displayed DTC.

OK

Complete

6	Check airbag main harness (driver's airbag harness).

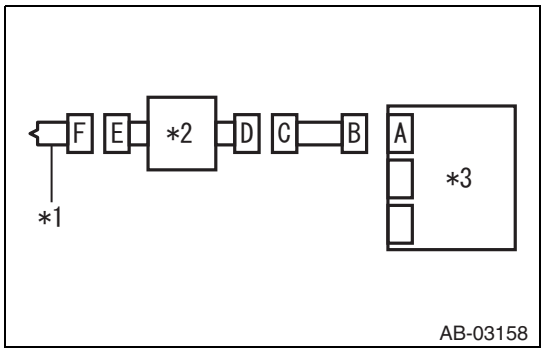

(1) Remove the column cover and disconnect the connector (D52).
(2) Measure the resistance between the terminals.

Resistance

Inspection terminals	Inspection conditions	Standard value
(3AG) No. 1 - (3AG) No. 3	Always	1 MΩ or more

Captions in illustration

*1	Driver side air bag module
*2	Roll connector
*3	Airbag control module

NG → Replace the airbag rear harness along with the body harness.

OK

Replace the roll connector.

DTC	B1801	Open in Driver's Airbag

Circuit description

DTC No.	DTC detected item	Faulty part
B1801	• Airbag main harness circuit is open. • Airbag module harness (driver's side) circuit is open. • Roll connector is broken. • Driver's airbag module is faulty. • Airbag control module is faulty.	• Driver side air bag module • Airbag control module • Airbag main harness • Roll connector

RS

Circuit figure

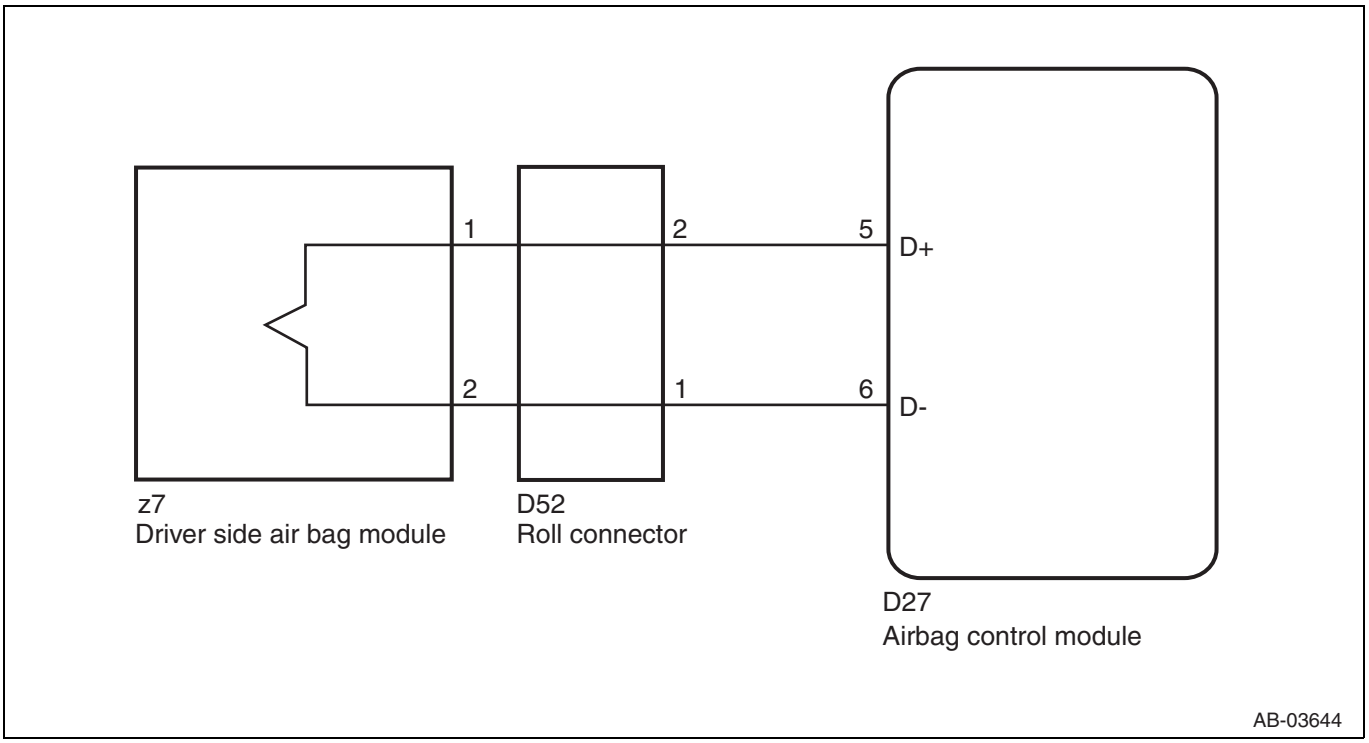

Inspection steps

RS

CAUTION:
Before performing the diagnosis, refer to the precautions.

1	Check poor contact of connectors.

(1) Check for poor contact of the connectors between the airbag control module and the driver's airbag module.
Criteria: No fault is found.

NG → Replace the airbag main harness along with the body harness.

OK

2	Check driver's airbag module.

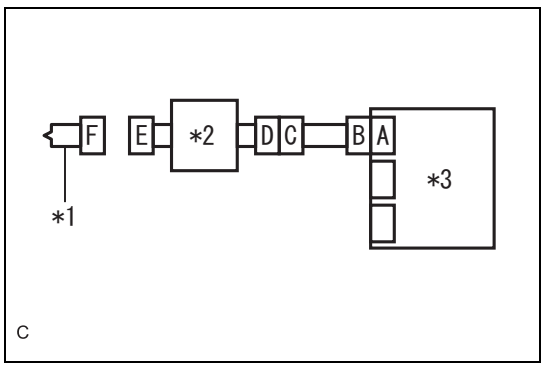

(1) Turn the ignition switch to OFF, disconnect the battery ground terminal, and wait for 60 seconds or more.
(2) Disconnect the connector (z7) from the driver's airbag module.
(3) Connect the connector (1Q) in the test harness Q to the connector E.
(4) Connect the airbag resistor to the connector (2Q) in the test harness Q.
(5) Connect the battery ground terminal and turn the ignition switch to ON.
Criteria: Airbag warning light remains on even after 6 seconds have passed.

Captions in illustration

*1	Driver side air bag module
*2	Roll connector
*3	Airbag control module

NG → Replace the driver's airbag module.

OK

3	Check roll connector and airbag main harness (driver's airbag harness).

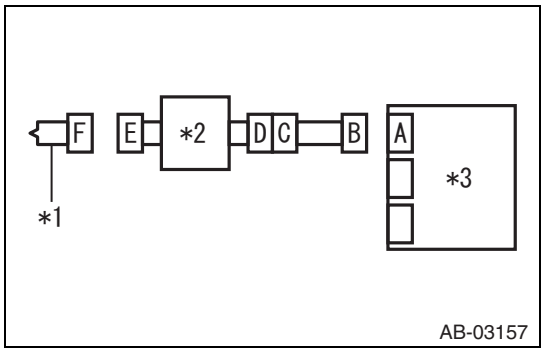

(1) Turn the ignition switch to OFF, disconnect the battery ground terminal, and wait for 60 seconds or more.
(2) Disconnect the passenger's airbag module connector (D30).
(3) Disconnect the airbag resistor from the connector (2Q) in the test harness Q.
(4) Disconnect the connector (D27, G19, H32) of the airbag control module.
(5) Measure the resistance between the terminals.

Resistance

Inspection terminals	Inspection conditions	Standard value
(2Q) No. 1 - (2Q) No. 2	Always	Less than 10 Ω

Captions in illustration

*1	Driver side air bag module
*2	Roll connector
*3	Airbag control module

NG → Go to Step 6.

OK

4	Check DTC

(1) Connect all connectors.
(2) Clear the memory.
(3) Perform the reproduction procedure.
(4) Read the DTC. (Current malfunction)
Criteria: DTC B1801 is not displayed.

NG → Replace the airbag control module.

OK

5	Check DTC

Criteria: No other DTC is displayed.

NG → Perform diagnosis for the displayed DTC.

OK

Complete

RS

6	Check roll connector.

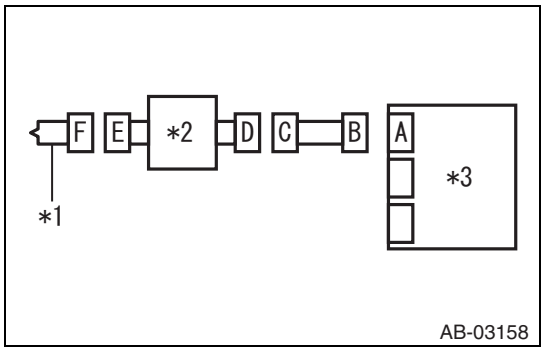

(1) Remove the column cover and disconnect the connector (D52).
(2) Measure the resistance between the terminals.

Resistance

Inspection terminals	Inspection conditions	Standard value
(2Q) No. 1 - (2Q) No. 2	Always	Less than 10 Ω

Captions in illustration

*1	Driver side air bag module
*2	Roll connector
*3	Airbag control module

NG → Replace the roll connector.

OK

Replace the airbag main harness along with the body harness.

DTC	B1802	Short in Driver's Airbag (to Ground)

RS

Circuit description

DTC No.	DTC detected item	Faulty part
B1802	• Airbag main harness circuit is shorted to ground. • Airbag module harness (driver's side) circuit is shorted to ground. • Roll connector circuit is shorted to ground. • Driver's airbag module is faulty. • Airbag control module is faulty.	• Driver side air bag module • Airbag control module • Airbag main harness • Roll connector

Circuit figure

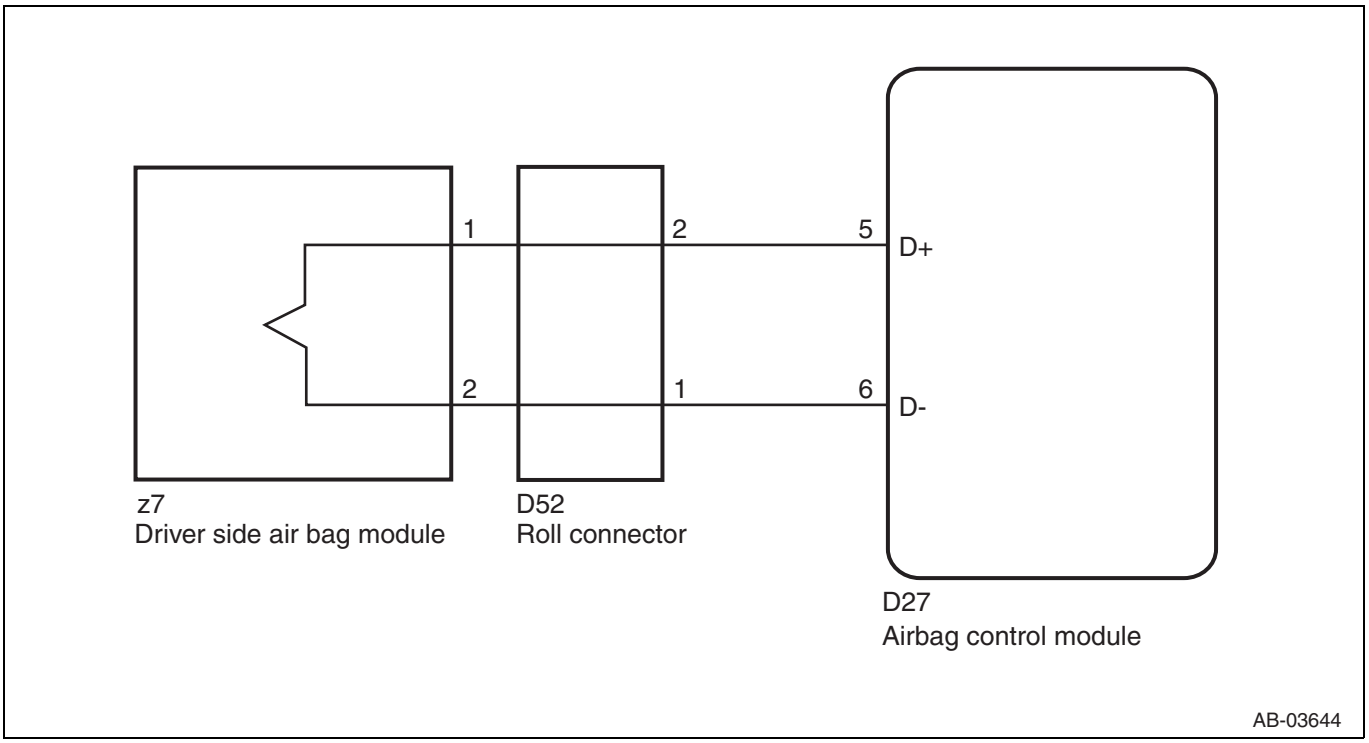

Inspection steps

CAUTION:

Before performing the diagnosis, refer to the precautions.

RS

1	Check poor contact of connectors.

(1) Check for poor contact of the connectors between the airbag control module and the driver's airbag module.

Criteria: No fault is found.

NG → Replace the airbag main harness along with the body harness.

OK

2	Check driver's airbag module.

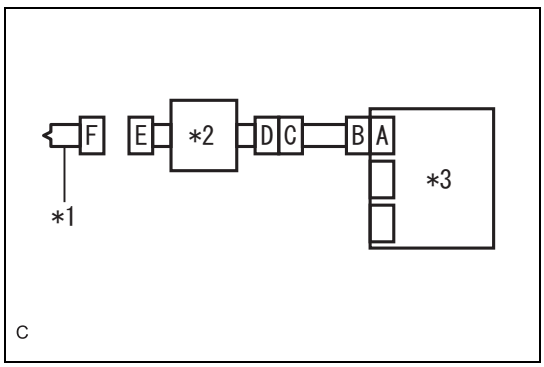

(1) Turn the ignition switch to OFF, disconnect the battery ground terminal, and wait for 60 seconds or more.
(2) Disconnect the connector (z7) from the driver's airbag module.
(3) Connect the connector (1Q) in the test harness Q to the connector E.
(4) Connect the airbag resistor to the connector (2Q) in the test harness Q.
(5) Connect the battery ground terminal and turn the ignition switch to ON.

Criteria: Airbag warning light remains on even after 6 seconds have passed.

Captions in illustration

*1	Driver side air bag module
*2	Roll connector
*3	Airbag control module

NG → Replace the driver's airbag module.

OK

3	Check roll connector.

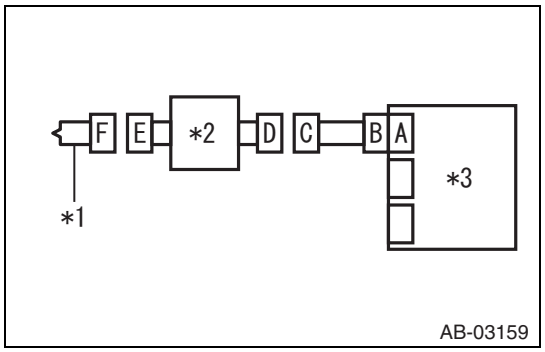

(1) Turn the ignition switch to OFF, disconnect the battery ground terminal, and wait for 60 seconds or more.
(2) Remove the column cover and disconnect the connector (D52).
(3) Disconnect the airbag resistor from the connector (2Q) in the test harness Q.
(4) Measure the resistance between the terminals.

Resistance

Inspection terminals	Inspection conditions	Standard value
(2Q) No. 1 - chassis ground	Always	1 MΩ or more
(2Q) No. 2 - chassis ground	Always	1 MΩ or more

Captions in illustration

*1	Driver side air bag module
*2	Roll connector
*3	Airbag control module

NG → Replace the roll connector.

OK

4	Check airbag main harness (driver's airbag harness).

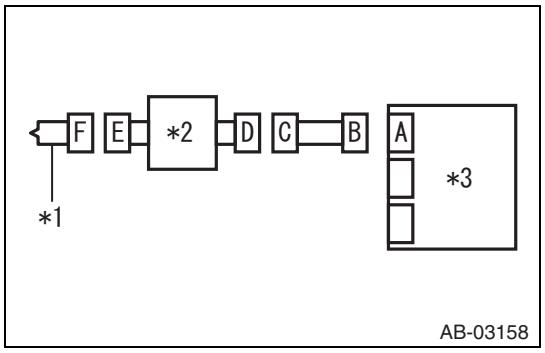

(1) Disconnect the test harness Q from the connector E.
(2) Disconnect the passenger's airbag module connector (D30).
(3) Disconnect the connector (D27, G19, H32) from the airbag control module, and connect the connector (1AG) in the test harness AG.
(4) Measure the resistance between the terminals.

Resistance

Inspection terminals	Inspection conditions	Standard value
(3AG) No. 1 - chassis ground	Always	1 MΩ or more
(3AG) No. 3 - chassis ground	Always	1 MΩ or more

Captions in illustration

*1	Driver side air bag module
*2	Roll connector
*3	Airbag control module

NG → Replace the airbag main harness along with the body harness.

OK

RS

5	Check DTC

(1) Connect all connectors.
(2) Clear the memory.
(3) Perform the reproduction procedure.
(4) Read the DTC. (Current malfunction)
Criteria: DTC B1802 is not displayed.

NG → Replace the airbag control module.

OK

6	Check DTC

Criteria: No other DTC is displayed.

NG → Perform diagnosis for the displayed DTC.

OK

Complete

DTC	B1803	Short in Driver's Airbag (to +B)

RS

Circuit description

DTC No.	DTC detected item	Faulty part
B1803	• Airbag main harness circuit is shorted to power supply. • Airbag module harness (driver's side) circuit is shorted to power supply. • Roll connector circuit is shorted to power supply. • Driver's airbag module is faulty. • Airbag control module is faulty.	• Driver side air bag module • Airbag control module • Airbag main harness • Roll connector

Circuit figure

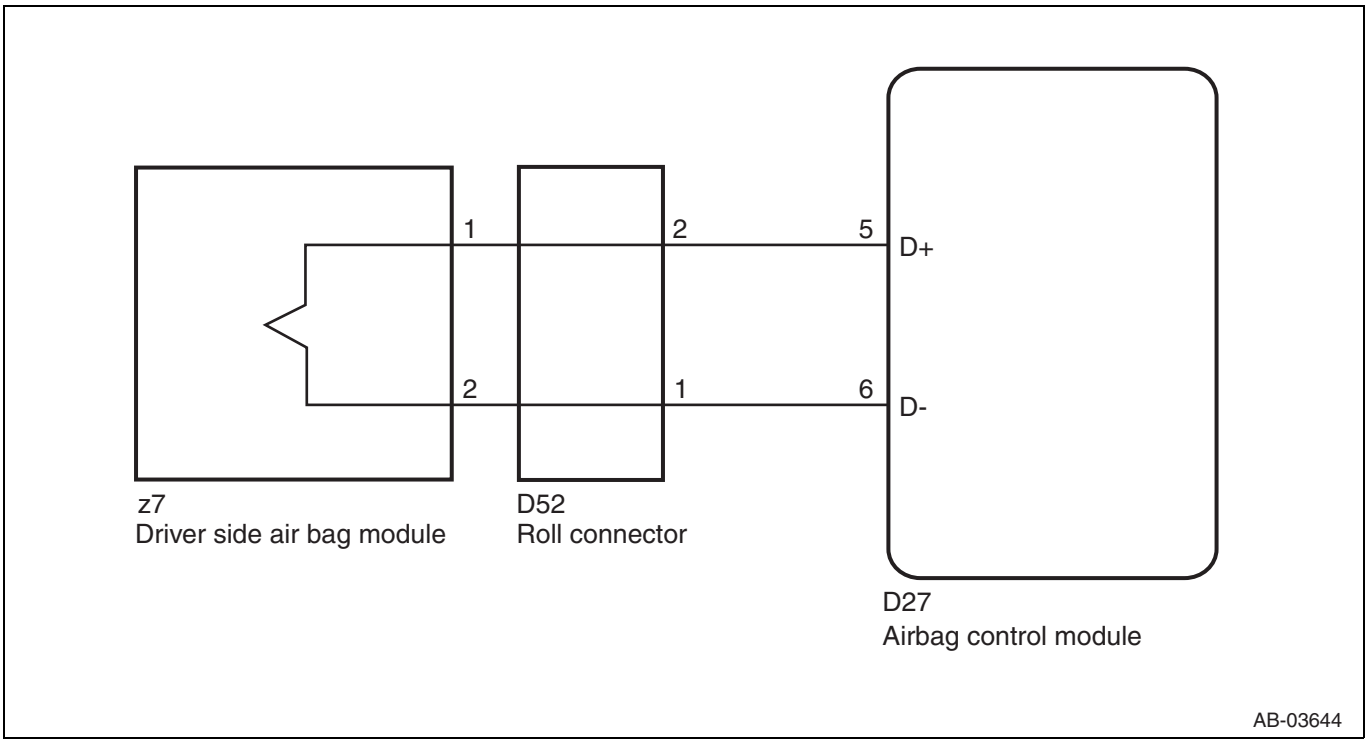

Inspection steps

RS

CAUTION:
Before performing the diagnosis, refer to the precautions.

1	Check poor contact of connectors.

(1) Check for poor contact of the connectors between the airbag control module and the driver's airbag module.
Criteria: No fault is found.

NG → Replace the airbag main harness along with the body harness.

OK

2	Check driver's airbag module.

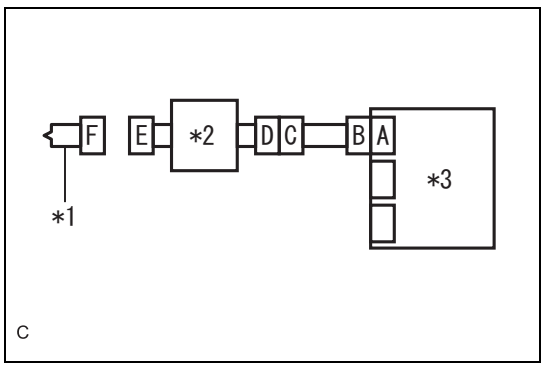

(1) Turn the ignition switch to OFF, disconnect the battery ground terminal, and wait for 60 seconds or more.
(2) Disconnect the connector (z7) from the driver's airbag module.
(3) Connect the connector (1Q) in the test harness Q to the connector E.
(4) Connect the airbag resistor to the connector (2Q) in the test harness Q.
(5) Connect the battery ground terminal and turn the ignition switch to ON.
Criteria: Airbag warning light remains on even after 6 seconds have passed.

Captions in illustration

*1	Driver side air bag module
*2	Roll connector
*3	Airbag control module

NG → Replace the driver's airbag module.

OK

3	Check roll connector.

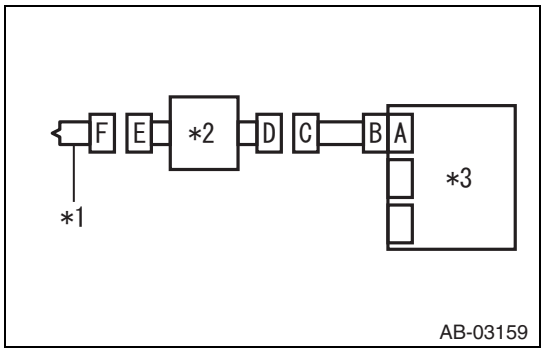

(1) Turn the ignition switch to OFF, disconnect the battery ground terminal, and wait for 60 seconds or more.
(2) Remove the column cover and disconnect the connector (D52).
(3) Disconnect the airbag resistor from the connector (2Q) in the test harness Q.
(4) Measure the voltage between the terminals.

Voltage

Inspection terminals	Inspection conditions	Standard value
(2Q) No. 1 (+) - chassis ground (-)	Always	Less than 1 V
(2Q) No. 2 (+) - chassis ground (-)	Always	Less than 1 V

Captions in illustration

*1	Driver side air bag module
*2	Roll connector
*3	Airbag control module

NG → Replace the roll connector.

OK

4	Check airbag main harness (driver's airbag harness).

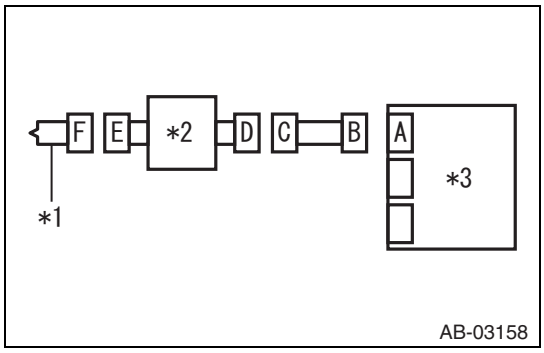

(1) Disconnect the test harness Q from the connector E.
(2) Disconnect the passenger's airbag module connector (D30).
(3) Disconnect the connector (D27, G19, H32) from the airbag control module, and connect the connector (1AG) in the test harness AG.
(4) Connect the battery and then turn the ignition switch to ON.
(5) Measure the voltage between the terminals.

Voltage

Inspection terminals	Inspection conditions	Standard value
(3AG) No. 1 (+) - chassis ground (-)	Always	Less than 1 V
(3AG) No. 3 (+) - chassis ground (-)	Always	Less than 1 V

Captions in illustration

*1	Driver side air bag module
*2	Roll connector
*3	Airbag control module

NG → Replace the airbag main harness along with the body harness.

OK

RS

5	Check DTC

(1) Connect all connectors.
(2) Clear the memory.
(3) Perform the reproduction procedure.
(4) Read the DTC. (Current malfunction)
Criteria: DTC B1803 is not displayed.

NG → Replace the airbag control module.

OK

6	Check DTC

Criteria: No other DTC is displayed.

NG → Perform diagnosis for the displayed DTC.

OK

Complete

RS

DTC	B1805	Short in Passenger's Airbag

Circuit description

DTC No.	DTC detected item	Faulty part
B1805	• Airbag main harness circuit is shorted. • Airbag module harness circuit (passenger's side) is shorted. • Passenger's airbag module is faulty. • Airbag control module is faulty.	• Passenger's airbag module • Airbag control module • Airbag main harness

Circuit figure

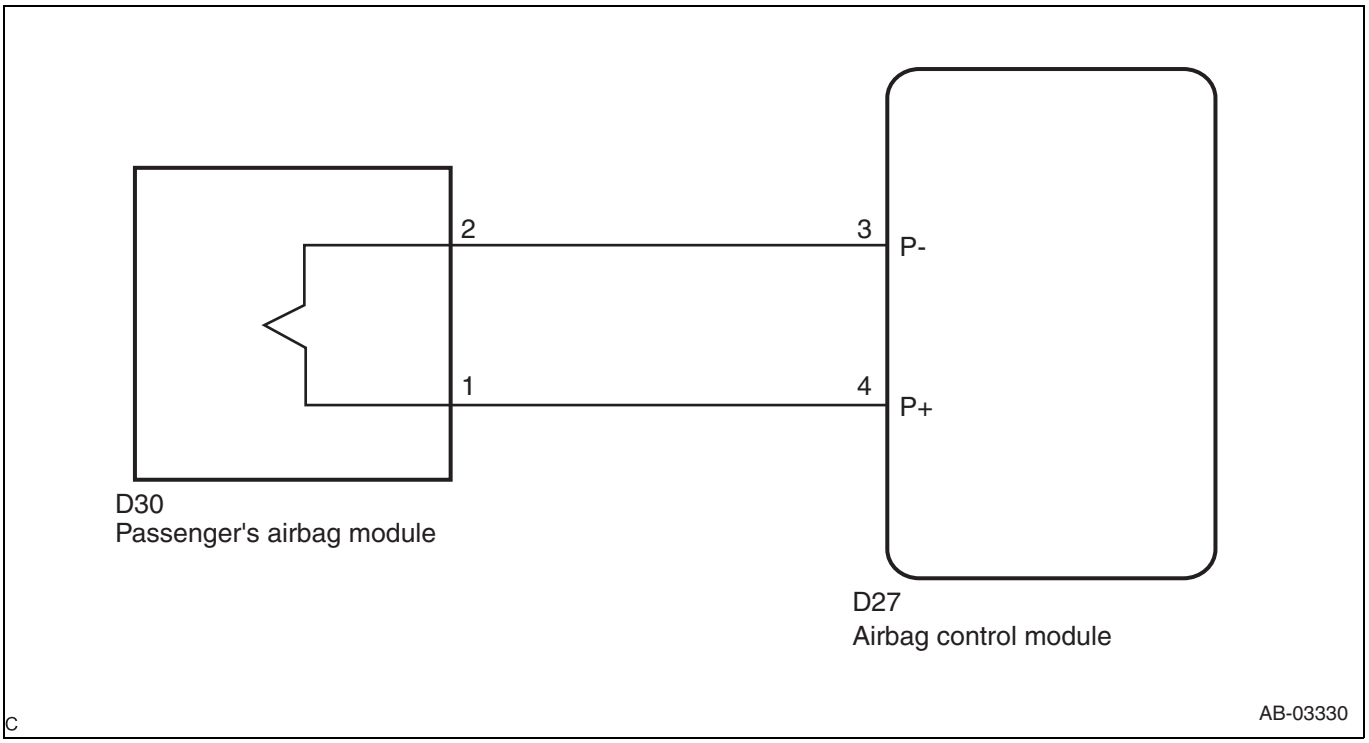

Inspection steps

CAUTION:

Before performing the diagnosis, refer to the precautions.

RS

1	Check poor contact of connectors.

(1) Check for poor contact of the connectors between the airbag control module and the passenger's airbag module.

Criteria: No fault is found.

NG → Replace the airbag main harness along with the body harness.

OK

2	Check airbag main harness (passenger's airbag harness).

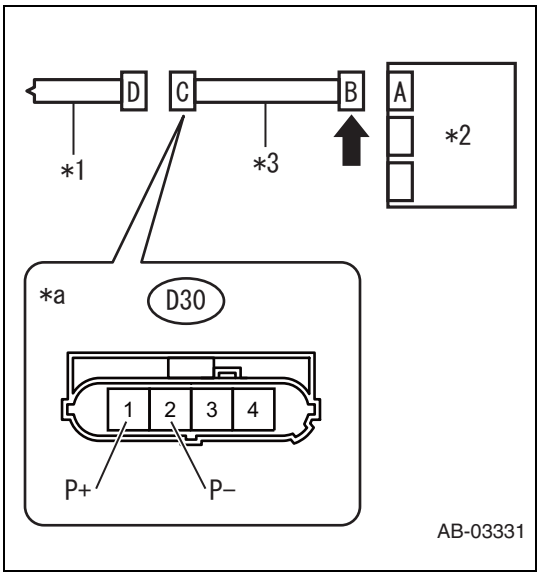

(1) Turn the ignition switch to OFF, disconnect the battery ground terminal, and wait for 60 seconds or more.
(2) Remove the column cover and disconnect the connector (D52).
(3) Disconnect the connector (D27, G19, H32) of the airbag control module, connect the connector (1AG) in the test harness AG, and release the short mechanism of the connectors.
(4) Disconnect the passenger's airbag module connector (D30).
(5) Using a probe, measure the resistance between the terminals of connector (D30).
CAUTION:
When measuring the resistance, make sure that the probe is inserted from the back side (harness side) of the connector. Also, do not insert the probe forcibly.

Resistance

Inspection terminals	Inspection conditions	Standard value
(D30) No. 1 - (D30) No. 2	Always	1 MΩ or more

Captions in illustration

*1	Passenger's airbag module
*2	Airbag control module
*3	Airbag main harness
*a	Passenger's airbag module connector

RS

NG → Replace the airbag main harness along with the body harness.

OK

3	Check airbag control module.

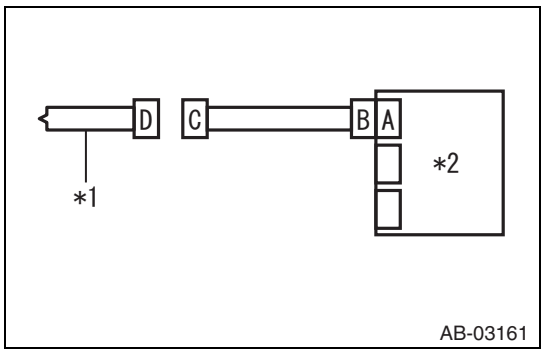

(1) Disconnect the test harness from the connector (D27, G19, H32).
(2) Connect the connector (D27, G19, H32) to the airbag control module.
(3) Connect the driver's airbag module connector (D52).
(4) Connect the battery ground terminal and turn the ignition switch to ON.
(5) Perform the reproduction procedure.
(6) Read the DTC. (Current malfunction)
Criteria: DTC B1805 is not displayed.

Captions in illustration

*1	Passenger's airbag module
*2	Airbag control module

NG → Replace the airbag control module.

OK

4	Check passenger's airbag module.

(1) Turn the ignition switch to OFF, disconnect the battery ground terminal, and wait for 60 seconds or more.

(2) Connect the passenger's airbag module connector (D30).
(3) Connect the battery ground terminal, and clear the memory.
(4) Perform the reproduction procedure.
(5) Read the DTC. (Current malfunction)
Criteria: DTC B1805 is not displayed.

NG → Replace the passenger's airbag module.

OK

5	Check DTC

Criteria: No other DTC is displayed.

NG → Perform diagnosis for the displayed DTC.

OK

Complete

DTC	B1806	Open in Passenger's Airbag

Circuit description

DTC No.	DTC detected item	Faulty part
B1806	• Airbag main harness circuit is open. • Airbag module harness (passenger's side) circuit is open. • Passenger's airbag module is faulty. • Airbag control module is faulty.	• Passenger's airbag module • Airbag control module • Airbag main harness

RS

Circuit figure

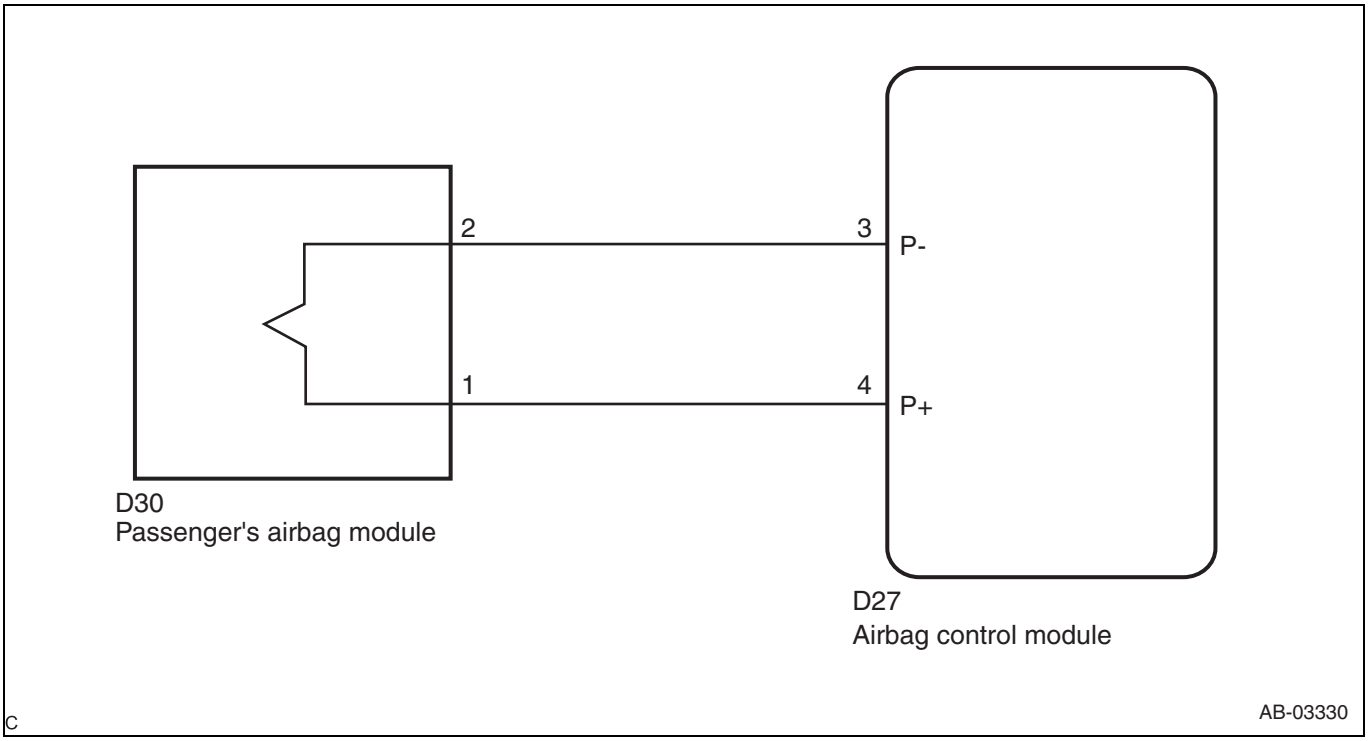

Inspection steps
CAUTION:
Before performing the diagnosis, refer to the precautions.

1	Check poor contact of connectors.

(1) Check for poor contact of the connectors between the airbag control module and the passenger's airbag module.
Criteria: No fault is found.

NG → Replace the airbag main harness along with the body harness.

OK

2	Check airbag main harness (passenger's airbag harness).

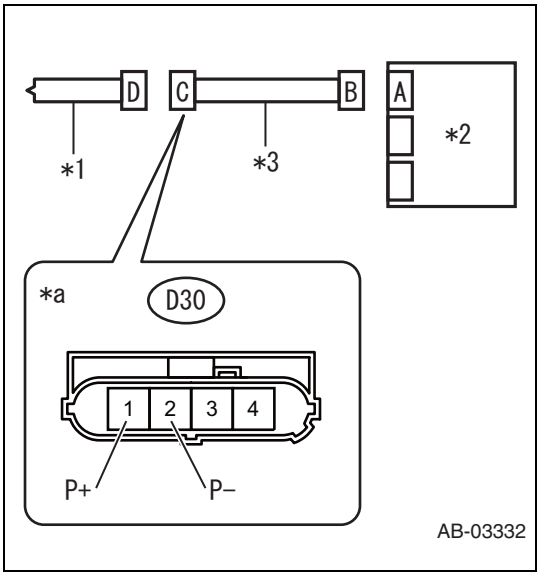

(1) Turn the ignition switch to OFF, disconnect the battery ground terminal, and wait for 60 seconds or more.
(2) Remove the column cover and disconnect the connector (D52).
(3) Disconnect the passenger's airbag module connector (D30).
(4) Disconnect the connector (D27, G19, H32) of the airbag control module.
(5) Using a probe, measure the resistance between the terminals of connector (D30).
CAUTION:
When measuring the resistance, make sure that the probe is inserted from the back side (harness side) of the connector. Also, do not insert the probe forcibly.

Resistance

Inspection terminals	Inspection conditions	Standard value
(D30) No. 1 - (D30) No. 2	Always	Less than 10 Ω

Criteria: Airbag warning light remains on even after 6 seconds have passed.

Captions in illustration

*1	Passenger's airbag module
*2	Airbag control module
*3	Airbag main harness
*a	Passenger's airbag module connector

NG → Replace the airbag main harness along with the body harness.

OK

RS

3	Check DTC

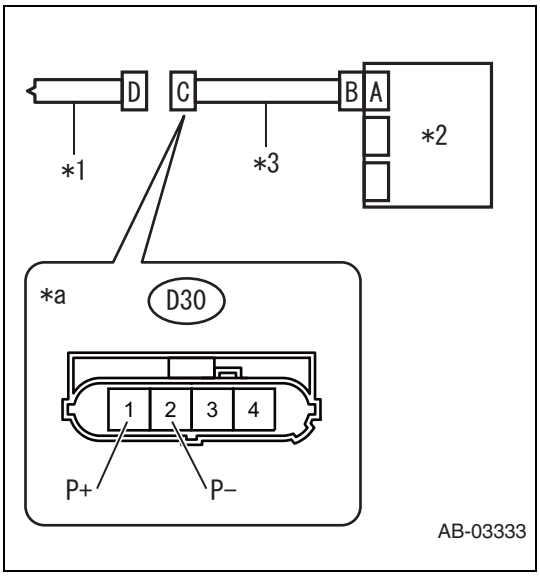

(1) Connect the connector (D27, G19, H32) to the airbag control module.
(2) Connect the connector (D52).
(3) Using a probe, short-circuit the terminals 1 to 2 of the connector C.
CAUTION:
When short-circuiting the terminals, make sure that the probe is inserted from the back side (harness side) of the connector. Also, do not insert the probe forcibly.
(4) Connect the battery ground terminal and turn the ignition switch to ON.
(5) Perform the reproduction procedure.
(6) Read the DTC. (Current malfunction)
Criteria: DTC B1806 is not displayed.

Captions in illustration

*1	Passenger's airbag module
*2	Airbag control module
*3	Airbag main harness
*a	Passenger's airbag module connector

NG → Replace the airbag control module.

OK

4	Check passenger's airbag module.

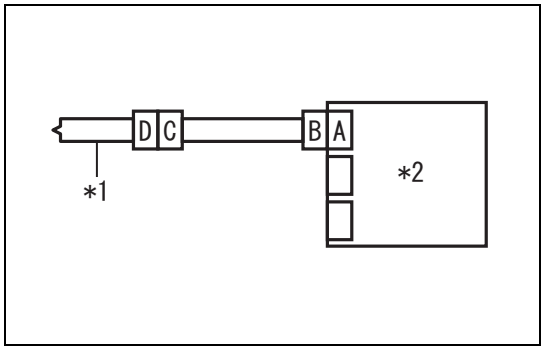

(1) Turn the ignition switch to OFF, disconnect the battery ground terminal, and wait for 60 seconds or more.
(2) Connect the passenger's airbag module connector (D30).
(3) Connect the battery ground terminal, and clear the memory.
(4) Perform the reproduction procedure.
(5) Read the DTC. (Current malfunction)
Criteria: DTC B1806 is not displayed.

Captions in illustration

*1	Passenger's airbag module
*2	Airbag control module

NG → Replace the passenger's airbag module.

OK

5	Check DTC

Criteria: No other DTC is displayed.

NG → Perform diagnosis for the displayed DTC.

OK

Complete

RS

DTC	B1807	Short in Passenger's Airbag (to Ground)

Circuit description

DTC No.	DTC detected item	Faulty part
B1807	• Airbag main harness circuit is shorted to ground. • Airbag module harness (passenger's side) circuit is shorted to ground. • Passenger's airbag module is faulty. • Airbag control module is faulty.	• Passenger's airbag module • Airbag control module • Airbag main harness

Circuit figure

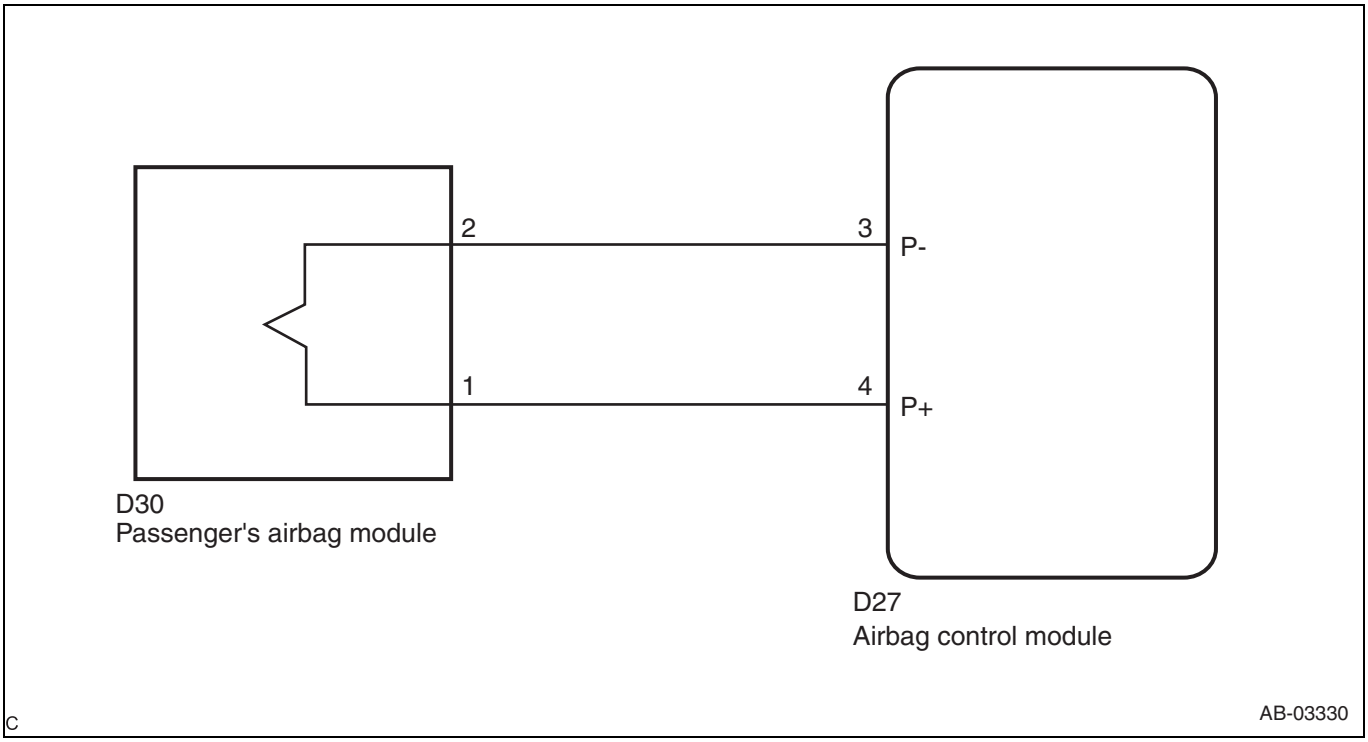

RS

Inspection steps

CAUTION:

Before performing the diagnosis, refer to the precautions.

1	Check poor contact of connectors.

(1) Check for poor contact of the connectors between the airbag control module and the passenger's airbag module.

Criteria: No fault is found.

NG → Replace the airbag main harness along with the body harness.

OK

2	Check airbag main harness (passenger's airbag harness).

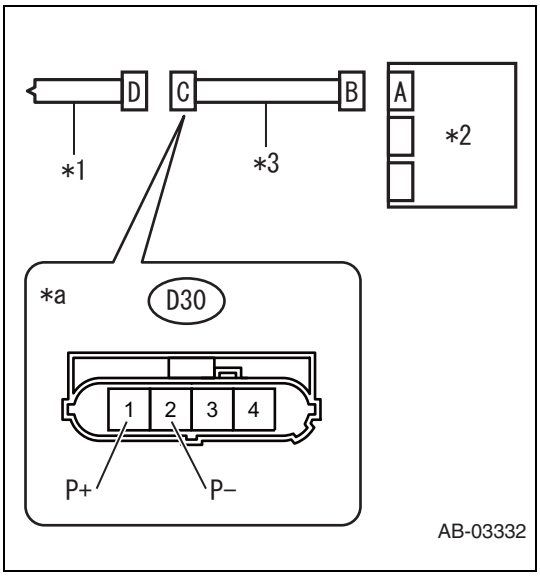

(1) Turn the ignition switch to OFF, disconnect the battery ground terminal, and wait for 60 seconds or more.
(2) Remove the column cover and disconnect the connector (D52).
(3) Disconnect the passenger's airbag module connector (D30).
(4) Disconnect the connector (D27, G19, H32) of the airbag control module.
(5) Using a probe, measure the resistance between the terminals.
CAUTION:
When measuring the resistance, make sure that the probe is inserted from the back side (harness side) of the connector. Also, do not insert the probe forcibly.

Resistance

Inspection terminals	Inspection conditions	Standard value
(D30) No. 1 - chassis ground	Always	1 MΩ or more
(D30) No. 2 - chassis ground	Always	1 MΩ or more

Captions in illustration

*1	Passenger's airbag module
*2	Airbag control module
*3	Airbag main harness
*a	Passenger's airbag module connector

NG → Replace the airbag main harness along with the body harness.

OK

3	Check DTC

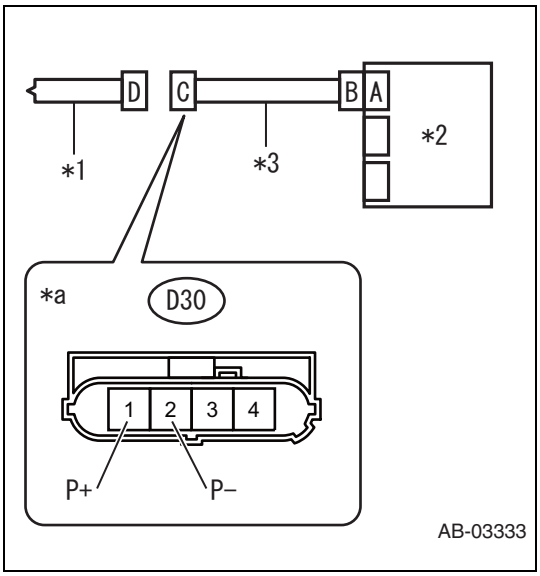

(1) Connect the connector (D27, G19, H32) to the airbag control module.
(2) Connect the connector (D52).
(3) Using a probe, short-circuit the terminals 1 and 2 of the connector (D30).
CAUTION:
When short-circuiting the terminals, make sure that the probe is inserted from the back side (harness side) of the connector. Also, do not insert the probe forcibly.
(4) Connect the battery ground terminal and turn the ignition switch to ON.
(5) Perform the reproduction procedure.
(6) Read the DTC. (Current malfunction)
Criteria: DTC B1807 is not displayed.

Captions in illustration

*1	Passenger's airbag module
*2	Airbag control module
*3	Airbag main harness
*a	Passenger's airbag module connector

NG → Replace the airbag control module.

RS

OK

4	Check passenger's airbag module.

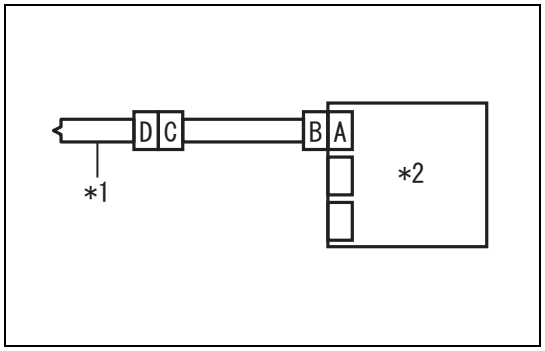

(1) Turn the ignition switch to OFF, disconnect the battery ground terminal, and wait for 60 seconds or more.
(2) Connect the passenger's airbag module connector (D30).
(3) Connect the battery ground terminal, and clear the memory.
(4) Perform the reproduction procedure.
(5) Read the DTC. (Current malfunction)
Criteria: DTC B1807 is not displayed.

Captions in illustration

*1	Passenger's airbag module
*2	Airbag control module

NG → Replace the passenger's airbag module.

OK

5	Check DTC

Criteria: No other DTC is displayed.

NG → Perform diagnosis for the displayed DTC.

RS

OK

Complete

DTC	B1808	Short in passenger's airbag (to +B)

Circuit description

DTC No.	DTC detected item	Faulty part
B1808	• Airbag main harness circuit is shorted to power supply. • Airbag module harness (passenger's side) circuit is shorted to power supply. • Passenger's airbag module is faulty. • Airbag control module is faulty.	• Passenger's airbag module • Airbag control module • Airbag main harness

Circuit figure

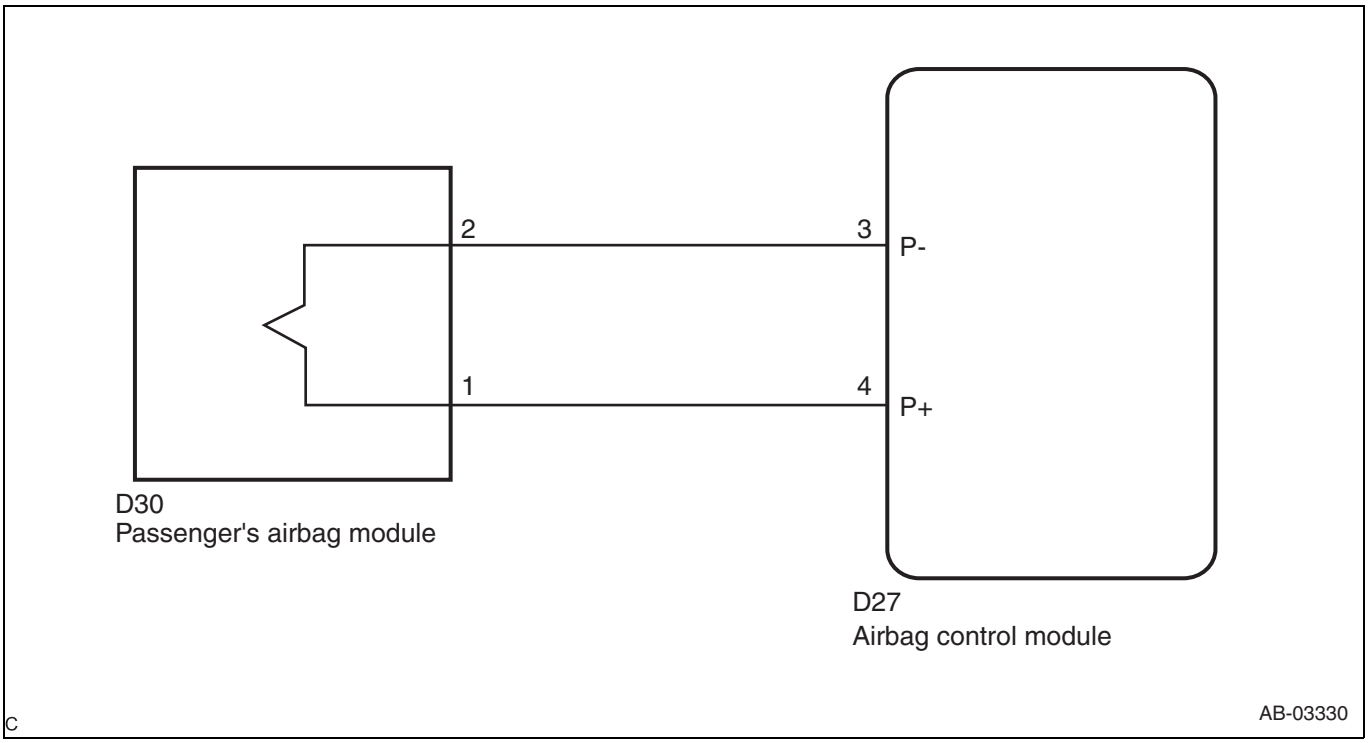

Inspection steps

CAUTION:

Before performing the diagnosis, refer to the precautions.

RS

1	Check poor contact of connectors.

(1) Check for poor contact of the connectors between the airbag control module and the passenger's airbag module.

Criteria: No fault is found.

NG → Replace the airbag main harness along with the body harness.

OK

2	Check airbag main harness (passenger's airbag harness).

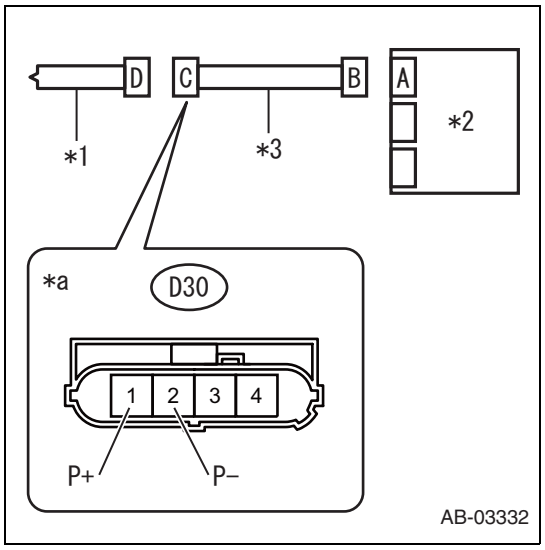

(1) Turn the ignition switch to OFF, disconnect the battery ground terminal, and wait for 60 seconds or more.
(2) Remove the column cover and disconnect the connector (D52).
(3) Disconnect the passenger's airbag module connector (D30).
(4) Disconnect the connector (D27, G19, H32) of the airbag control module.
(5) Using a probe, measure the voltage between the terminals.
CAUTION:
When measuring the voltage, make sure that the probe is inserted from the back side (harness side) of the connector. Also, do not insert the probe forcibly.

Voltage

Inspection terminals	Inspection conditions	Standard value
(D30) No. 1 - chassis ground	IG ON	Less than 1 V
(D30) No. 2 - chassis ground	IG ON	Less than 1 V

Captions in illustration

*1	Passenger's airbag module
*2	Airbag control module
*3	Airbag main harness
*a	Passenger's airbag module connector

NG → Replace the airbag main harness along with the body harness.

OK

3	Check DTC

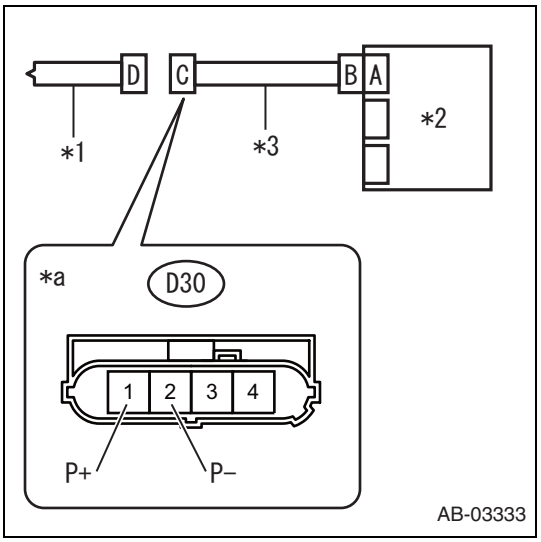

(1) Turn the ignition switch to OFF, disconnect the battery ground terminal, and wait for 60 seconds or more.
(2) Connect the connector (D27, G19, H32) to the airbag control module.
(3) Connect the connector (D52).
(4) Using a probe, short-circuit the terminals 1 and 2 of the connector (D30).
CAUTION:
When short-circuiting the terminals, make sure that the probe is inserted from the back side (harness side) of the connector. Also, do not insert the probe forcibly.
(5) Connect the battery ground terminal and turn the ignition switch to ON.
(6) Perform the reproduction procedure.
(7) Read the DTC. (Current malfunction)
Criteria: DTC B1808 is not displayed.

Captions in illustration

*1	Passenger's airbag module
*2	Airbag control module
*3	Airbag main harness
*a	Passenger's airbag module connector

RS

NG → Replace the airbag control module.

OK

4	Check passenger's airbag module.

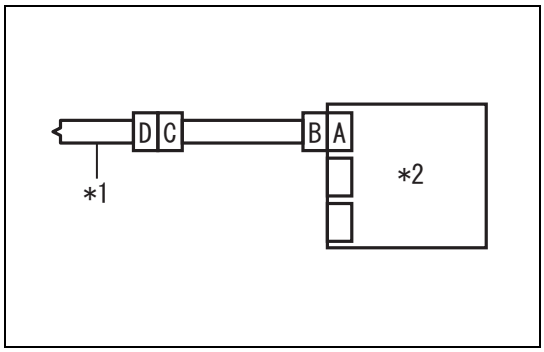

(1) Turn the ignition switch to OFF, disconnect the battery ground terminal, and wait for 60 seconds or more.
(2) Connect the passenger's airbag module connector (D30).
(3) Connect the battery ground terminal, and clear the memory.
(4) Perform the reproduction procedure.
(5) Read the DTC. (Current malfunction)
Criteria: DTC B1808 is not displayed.

Captions in illustration

*1	Passenger's airbag module
*2	Airbag control module

NG → Replace the passenger's airbag module.

OK

5	Check DTC

Criteria: No other DTC is displayed.

NG → Perform diagnosis for the displayed DTC.

OK

Complete

DTC	B1810	Short in Driver's Airbag Dual Stage - 2nd Step

Circuit description

DTC No.	DTC detected item	Faulty part
B1810	• Airbag main harness circuit is shorted. • Airbag module harness (driver's side) circuit is shorted. • Roll connector circuit is shorted. • Driver's airbag module is faulty. • Airbag control module is faulty.	• Driver side air bag module • Airbag control module • Airbag main harness • Roll connector

RS

Circuit figure

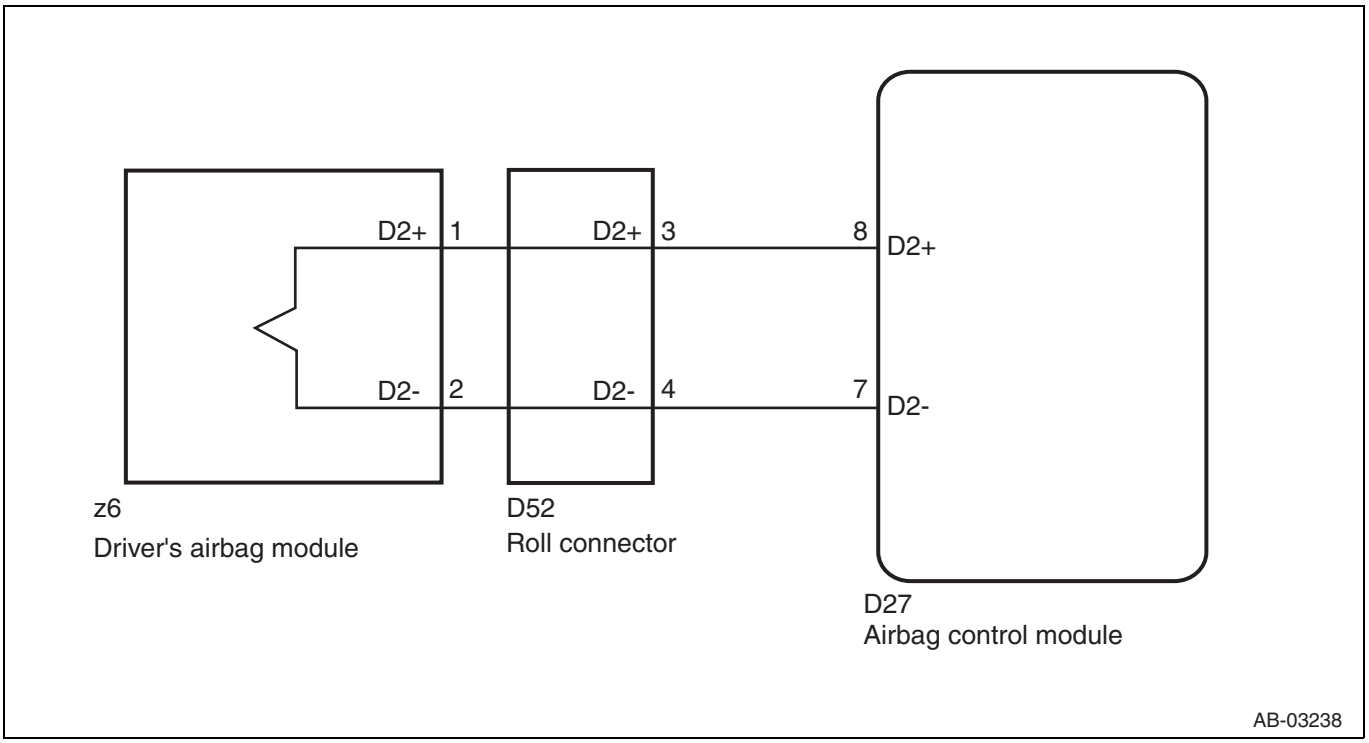

Inspection steps

RS

CAUTION:
Before performing the diagnosis, refer to the precautions.

1	Check poor contact of connectors.

(1) Check for poor contact of the connectors between the airbag control module and the driver's airbag module.
Criteria: No fault is found.

NG → Replace the airbag main harness along with the body harness.

OK

2	Check driver's airbag module.

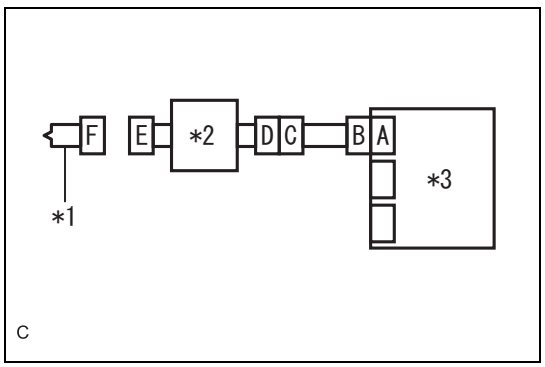

(1) Turn the ignition switch to OFF, disconnect the battery ground terminal, and wait for 60 seconds or more.
(2) Disconnect the connector (z6) from the driver's airbag module.
(3) Connect the connector (1N) in the test harness N to the connector E.
(4) Connect the airbag resistor to the connector (2N) in the test harness N.
(5) Connect the battery ground terminal and turn the ignition switch to ON.
Criteria: Airbag warning light remains on even after 6 seconds have passed.

Captions in illustration

*1	Driver side air bag module
*2	Roll connector
*3	Airbag control module

NG → Replace the driver's airbag module.

OK

3	Check roll connector and airbag main harness (driver's airbag harness).

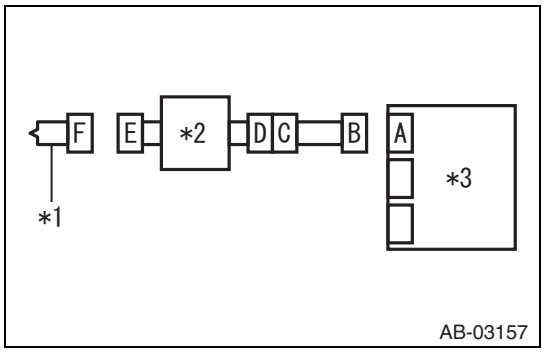

(1) Turn the ignition switch to OFF, disconnect the battery ground terminal, and wait for 60 seconds or more.
(2) Disconnect the connector (D30) from the passenger's airbag module.
(3) Disconnect the airbag resistor from the connector (2N) in the test harness N.
(4) Disconnect the connector (D27, G19, H32) from the airbag control module, and connect the connector (1AG) in the test harness AG.
(5) Measure the resistance between the terminals.

Resistance

Inspection terminals	Inspection conditions	Standard value
(2N) No. 1 - (2N) No. 2	Always	1 MΩ or more

Captions in illustration

*1	Driver side air bag module
*2	Roll connector
*3	Airbag control module

NG → Go to Step 6.

OK

4	Check DTC

(1) Connect all connectors.
(2) Clear the memory.
(3) Perform the reproduction procedure.
(4) Read the DTC. (Current malfunction)
Criteria: DTC B1810 is not displayed.

NG → Replace the airbag control module.

OK

5	Check DTC

Criteria: No other DTC is displayed.

NG → Perform diagnosis for the displayed DTC.

OK

Complete

RS

6	Check airbag main harness (driver's airbag harness).

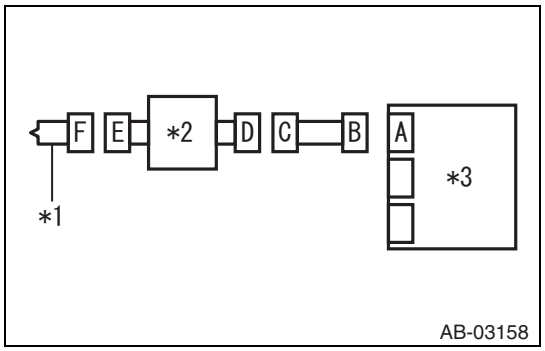

(1) Disconnect the connector C.
(2) Measure the resistance between the terminals.

Resistance

Inspection terminals	Inspection conditions	Standard value
(3AG) No. 2 - (3AG) No. 4	Always	1 MΩ or more

Captions in illustration

*1	Driver side air bag module
*2	Roll connector
*3	Airbag control module

NG → Replace the airbag rear harness along with the body harness.

OK

Replace the roll connector.

RS

DTC	B1811	Open in driver's airbag dual stage - 2nd step

Circuit description

DTC No.	DTC detected item	Faulty part
B1811	• Airbag main harness circuit is open. • Airbag module harness (driver's side) circuit is open. • Roll connector is broken. • Driver's airbag module is faulty. • Airbag control module is faulty.	• Driver side air bag module • Airbag control module • Airbag main harness • Roll connector

Circuit figure

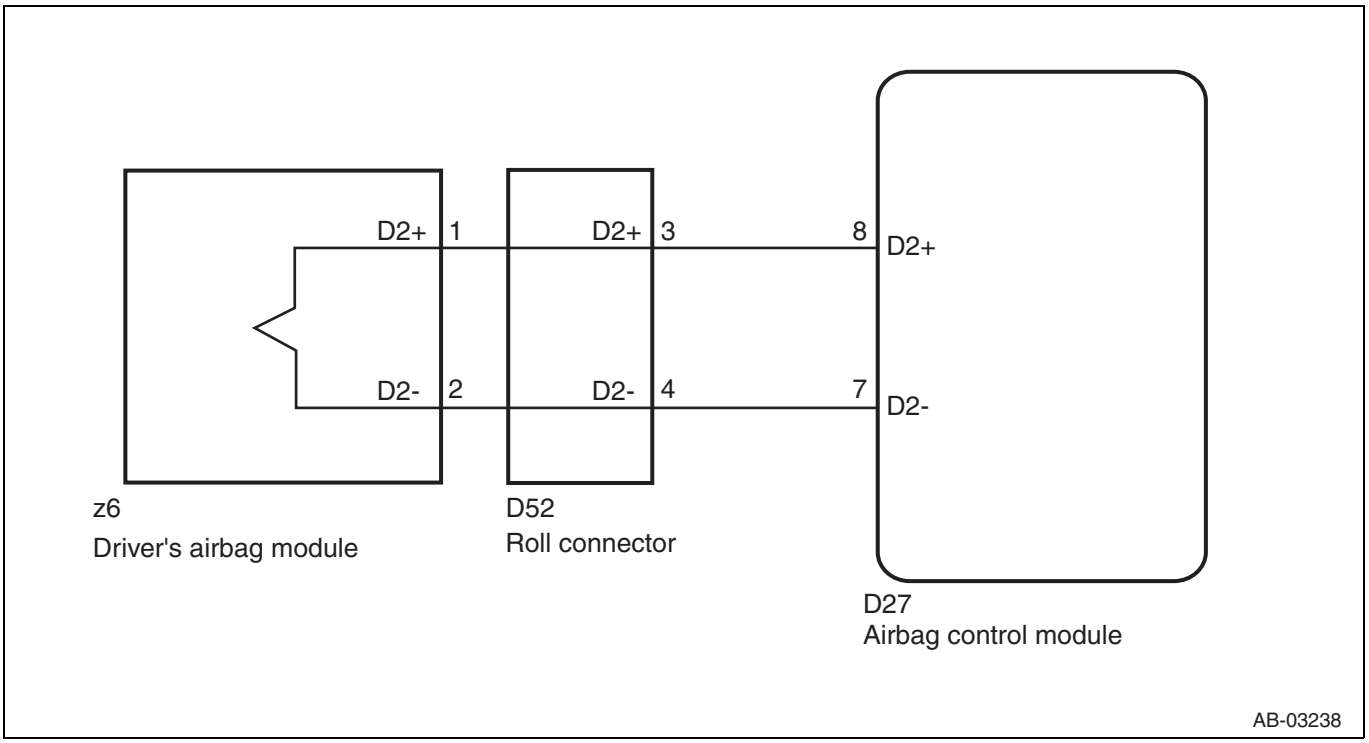

Inspection steps

CAUTION:

Before performing the diagnosis, refer to the precautions.

RS

1	Check poor contact of connectors.

(1) Check for poor contact of the connectors between the airbag control module and the driver's airbag module.

Criteria: No fault is found.

NG → Replace the airbag main harness along with the body harness.

OK

2	Check driver's airbag module.

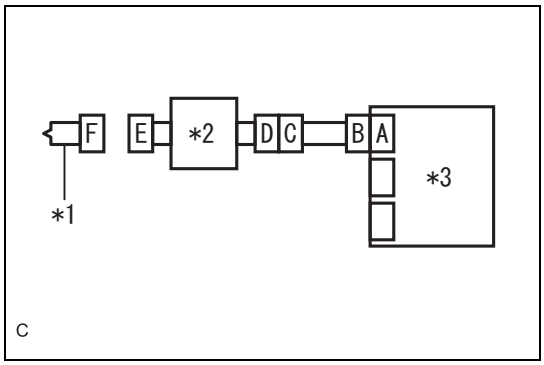

(1) Turn the ignition switch to OFF, disconnect the battery ground terminal, and wait for 60 seconds or more.
(2) Disconnect the connector (z6) from the driver's airbag module.
(3) Connect the connector (1N) in the test harness N to the connector E.
(4) Connect the airbag resistor to the connector (2N) in the test harness N.
(5) Connect the battery ground terminal and turn the ignition switch to ON.

Criteria: Airbag warning light remains on even after 6 seconds have passed.

Captions in illustration

*1	Driver side air bag module
*2	Roll connector
*3	Airbag control module

NG → Replace the driver's airbag module.

OK

3	Check roll connector and airbag main harness (driver's airbag harness).

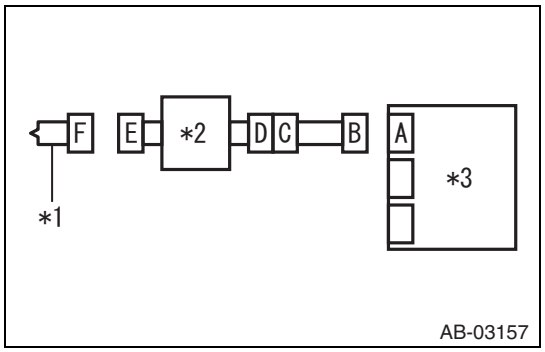

(1) Turn the ignition switch to OFF, disconnect the battery ground terminal, and wait for 60 seconds or more.
(2) Disconnect the connector (D30) from the passenger's airbag module.
(3) Disconnect the airbag resistor from the connector (2N) in the test harness N.
(4) Disconnect the connector B from the airbag control module.
(5) Measure the resistance between the terminals.

Resistance

Inspection terminals	Inspection conditions	Standard value
(2N) No. 1 - (2N) No. 2	Always	Less than 10 Ω

Captions in illustration

*1	Driver side air bag module
*2	Roll connector
*3	Airbag control module

NG → Go to Step 6.

OK

4	Check DTC

(1) Connect all connectors.
(2) Clear the memory.
(3) Perform the reproduction procedure.
(4) Read the DTC. (Current malfunction)
Criteria: DTC B1811 is not displayed.

NG → Replace the side airbag control module.

OK

5	Check DTC

Criteria: No other DTC is displayed.

NG → Perform diagnosis for the displayed DTC.

OK

Complete

6	Check roll connector.

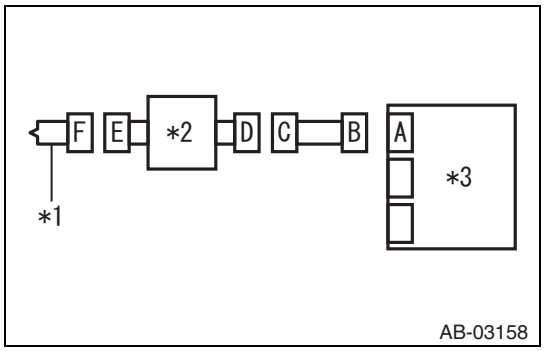

(1) Disconnect the connector C.
(2) Measure the resistance between the terminals.

Resistance

Inspection terminals	Inspection conditions	Standard value
(2N) No. 1 - (2N) No. 2	Always	Less than 10 Ω

Captions in illustration

*1	Driver side air bag module
*2	Roll connector
*3	Airbag control module

NG → Replace the roll connector.

OK

Replace the airbag rear harness along with the body harness.

DTC	B1812	Short in driver's airbag dual stage - 2nd step (to ground)

Circuit description

DTC No.	DTC detected item	Faulty part
B1812	• Airbag main harness circuit is shorted to ground. • Airbag module harness (driver's side) circuit is shorted to ground. • Roll connector circuit is shorted to ground. • Driver's airbag module is faulty. • Airbag control module is faulty.	• Driver side air bag module • Airbag control module • Airbag main harness • Roll connector

RS

Circuit figure

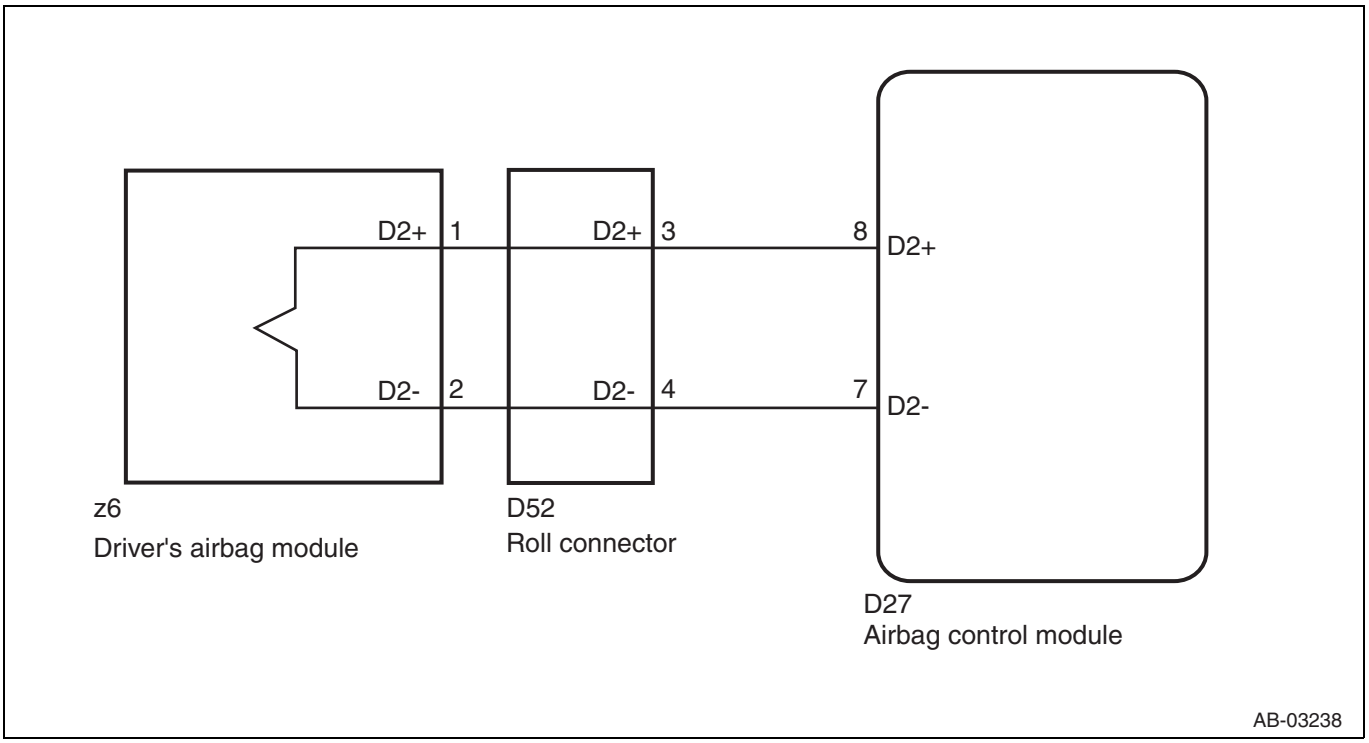

Inspection steps

RS

CAUTION:
Before performing the diagnosis, refer to the precautions.

1	Check poor contact of connectors.

(1) Check for poor contact of the connectors between the airbag control module and the driver's airbag module.
Criteria: No fault is found.

NG → Replace the airbag main harness along with the body harness.

OK

2	Check driver's airbag module.

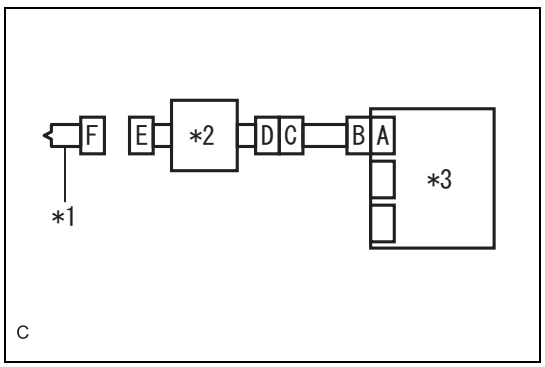

(1) Turn the ignition switch to OFF, disconnect the battery ground terminal, and wait for 60 seconds or more.
(2) Disconnect the connector (z6) from the driver's airbag module.
(3) Connect the connector (1N) in the test harness N to the connector E.
(4) Connect the airbag resistor to the connector (2N) in the test harness N.
(5) Connect the battery ground terminal and turn the ignition switch to ON.
Criteria: Airbag warning light remains on even after 6 seconds have passed.

Captions in illustration

*1	Driver side air bag module
*2	Roll connector
*3	Airbag control module

NG → Replace the driver's airbag module.

OK

3	Check roll connector.

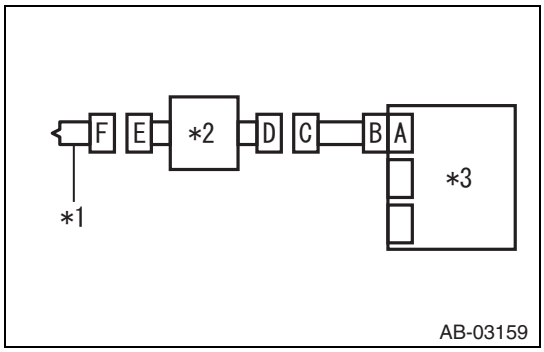

(1) Turn the ignition switch to OFF, disconnect the battery ground terminal, and wait for 60 seconds or more.
(2) Disconnect the connector C.
(3) Disconnect the airbag resistor from the connector (2N) in the test harness N.
(4) Measure the resistance between the terminals.

Resistance

Inspection terminals	Inspection conditions	Standard value
(2N) No. 1 - chassis ground	Always	1 MΩ or more
(2N) No. 2 - chassis ground	Always	1 MΩ or more

Captions in illustration

*1	Driver side air bag module
*2	Roll connector
*3	Airbag control module

NG → Replace the roll connector.

OK

4	Check airbag main harness (driver's airbag harness).

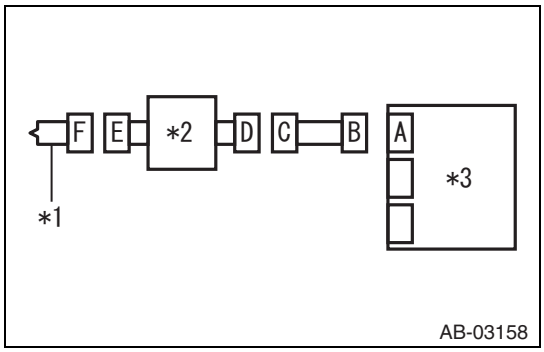

(1) Disconnect the test harness N from the connector E.
(2) Disconnect the connector (D30) from the passenger's airbag module.
(3) Disconnect the connector (D27, G19, H32) from the airbag control module, and connect the connector (1AG) in the test harness AG.
(4) Measure the resistance between the terminals.

Resistance

Inspection terminals	Inspection conditions	Standard value
(3AG) No. 2 - chassis ground	Always	1 MΩ or more
(3AG) No. 4 - chassis ground	Always	1 MΩ or more

Captions in illustration

*1	Driver side air bag module
*2	Roll connector
*3	Airbag control module

NG → Replace the airbag main harness along with the body harness.

OK

RS

5	Check DTC

(1) Connect all connectors.
(2) Clear the memory.
(3) Perform the reproduction procedure.
(4) Read the DTC. (Current malfunction)
Criteria: DTC B1812 is not displayed.

NG → Replace the airbag control module.

OK

6	Check DTC

Criteria: No other DTC is displayed.

NG → Perform diagnosis for the displayed DTC.

OK

Complete

RS

DTC	B1813	Short in driver's airbag dual stage - 2nd step circuit (to +B)

Circuit description

DTC No.	DTC detected item	Faulty part
B1813	• Airbag main harness circuit is shorted to power supply. • Airbag module harness (driver's side) circuit is shorted to power supply. • Roll connector circuit is shorted to power supply. • Driver's airbag module is faulty. • Airbag control module is faulty.	• Driver side air bag module • Airbag control module • Airbag main harness • Roll connector

Circuit figure

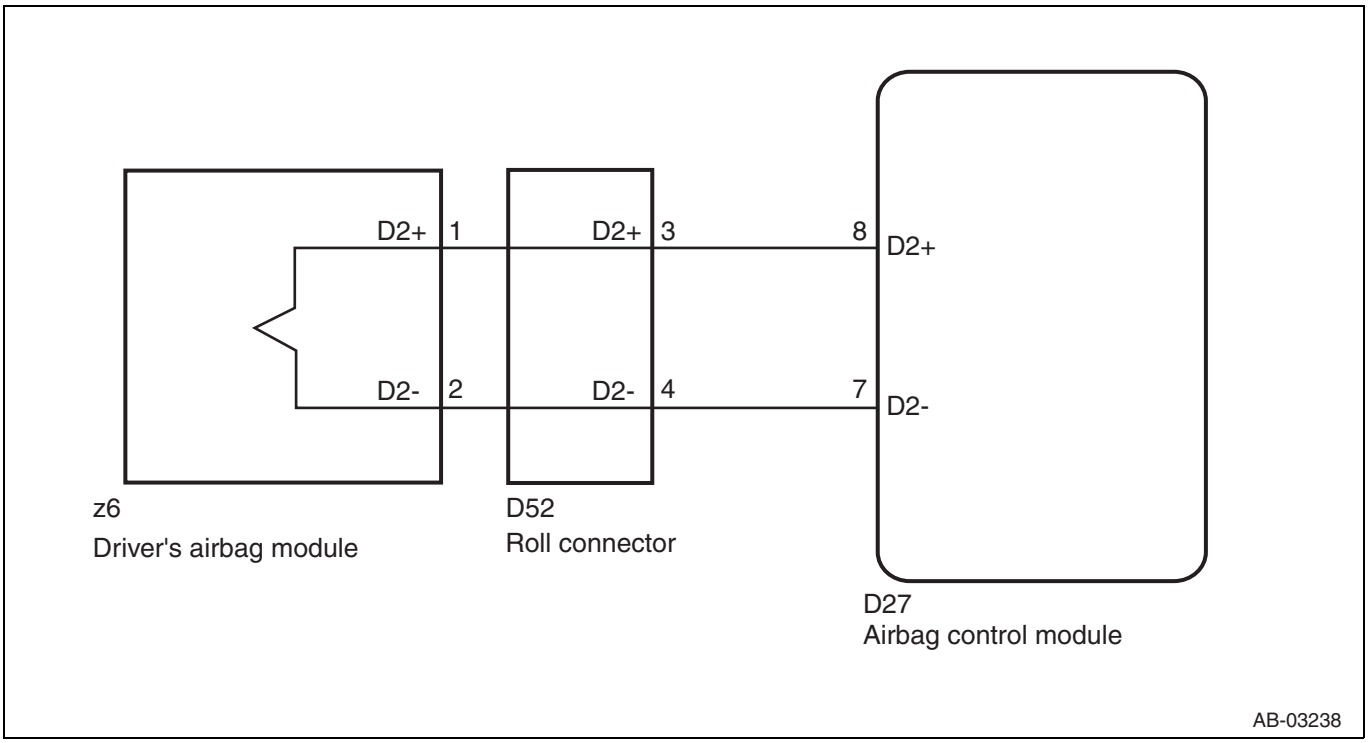

Inspection steps

CAUTION:

Before performing the diagnosis, refer to the precautions.

RS

1	Check poor contact of connectors.

(1) Check for poor contact of the connectors between the airbag control module and the driver's airbag module.

Criteria: No fault is found.

NG → Replace the airbag main harness along with the body harness.

OK

2	Check driver's airbag module.

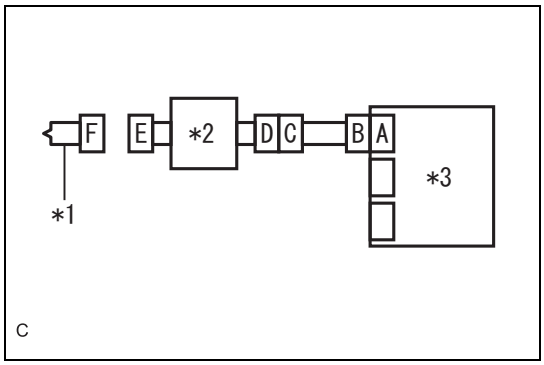

(1) Turn the ignition switch to OFF, disconnect the battery ground terminal, and wait for 60 seconds or more.
(2) Disconnect the connector (z6) from the driver's airbag module.
(3) Connect the connector (1N) in the test harness N to the connector E.
(4) Connect the airbag resistor to the connector (2N) in the test harness N.
(5) Connect the battery ground terminal and turn the ignition switch to ON.

Criteria: Airbag warning light remains on even after 6 seconds have passed.

Captions in illustration

*1	Driver side air bag module
*2	Roll connector
*3	Airbag control module

NG → Replace the driver's airbag module.

OK

3	Check roll connector.

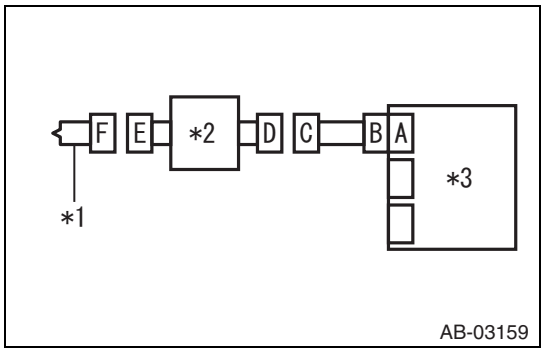

(1) Turn the ignition switch to OFF, disconnect the battery ground terminal, and wait for 60 seconds or more.
(2) Disconnect the connector C.
(3) Disconnect the airbag resistor from the connector (2N) in the test harness N.
(4) Measure the voltage between the terminals.

Voltage

Inspection terminals	Inspection conditions	Standard value
(2N) No. 1 (+) - chassis ground (-)	Always	Less than 1 V
(2N) No. 2 (+) - chassis ground (-)	Always	Less than 1 V

Captions in illustration

*1	Driver side air bag module
*2	Roll connector
*3	Airbag control module

NG → Replace the roll connector.

OK

4	Check airbag main harness (driver's airbag harness).

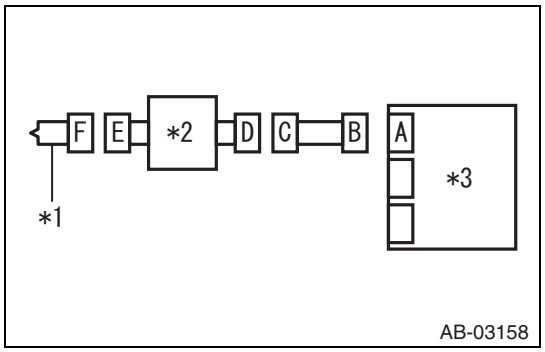

(1) Disconnect the test harness N from the connector E.
(2) Disconnect the connector (D30) from the passenger's airbag module.
(3) Disconnect the connector (D27, G19, H32) from the airbag control module, and connect the connector (1AG) in the test harness AG.
(4) Connect the battery and then turn the ignition switch to ON.
(5) Measure the voltage between the terminals.

Voltage

Inspection terminals	Inspection conditions	Standard value
(3AG) No. 2 (+) - chassis ground (-)	Always	Less than 1 V
(3AG) No. 4 (+) - chassis ground (-)	Always	Less than 1 V

Captions in illustration

*1	Driver side air bag module
*2	Roll connector
*3	Airbag control module

NG → Replace the airbag main harness along with the body harness.

OK

RS

5	Check DTC

(1) Connect all connectors.
(2) Clear the memory.
(3) Perform the reproduction procedure.
(4) Read the DTC. (Current malfunction)
Criteria: DTC B1813 is not displayed.

NG → Replace the airbag control module.

OK

6	Check DTC

Criteria: No other DTC is displayed.

NG → Perform diagnosis for the displayed DTC.

OK

Complete

DTC	B1815	Short in passenger's airbag dual stage - 2nd step

RS

Circuit description

DTC No.	DTC detected item	Faulty part
B1815	• Airbag main harness circuit is shorted. • Airbag module harness circuit (passenger's side) is shorted. • Passenger's airbag module is faulty. • Airbag control module is faulty.	• Passenger's airbag module • Airbag control module • Airbag main harness

Circuit figure

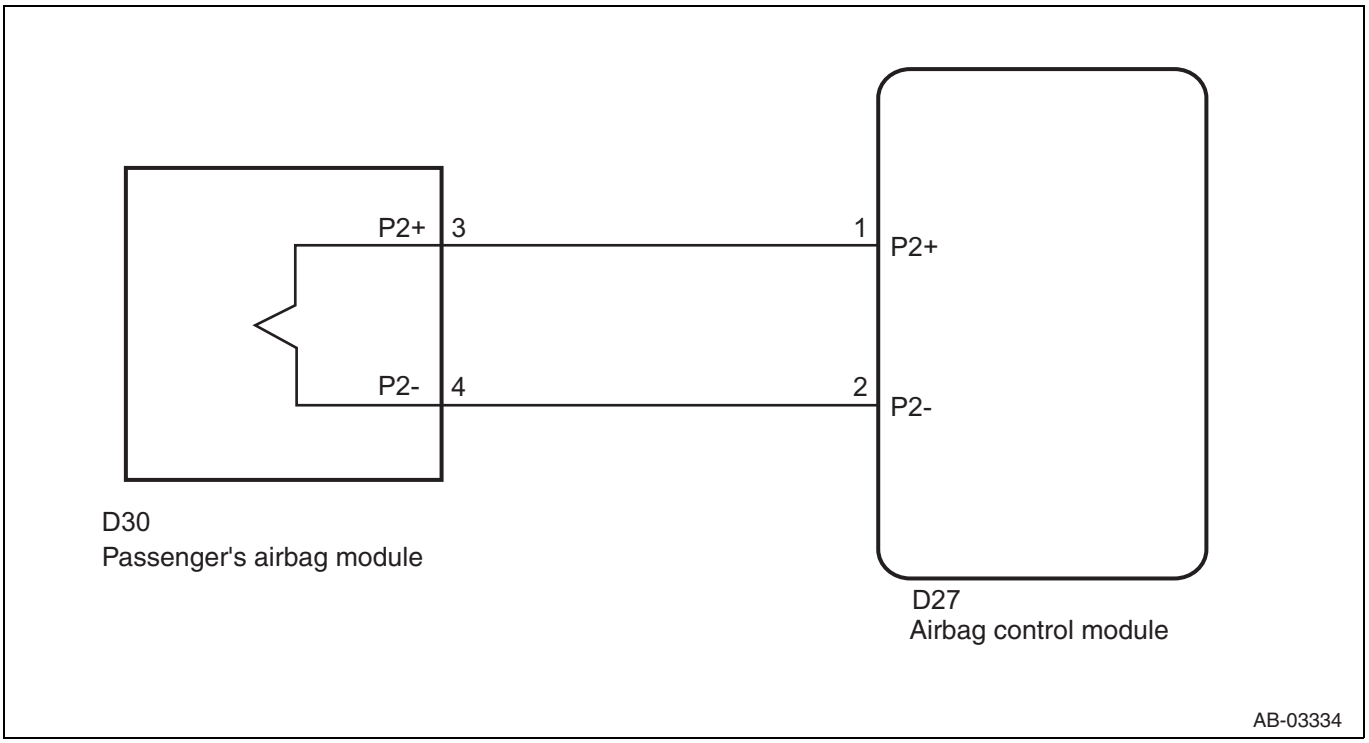

Inspection steps

RS

CAUTION:
Before performing the diagnosis, refer to the precautions.

1	Check poor contact of connectors.

(1) Check for poor contact of the connectors between the airbag control module and the passenger's airbag module.
Criteria: No fault is found.

NG → Replace the airbag main harness along with the body harness.

OK

2	Check airbag main harness (passenger's airbag harness).

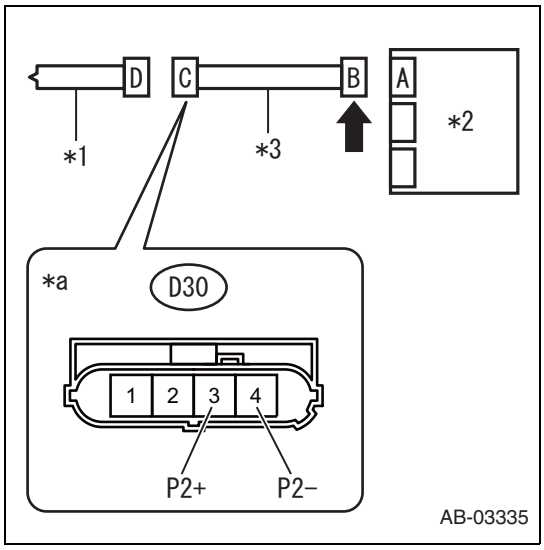

(1) Turn the ignition switch to OFF, disconnect the battery ground terminal, and wait for 60 seconds or more.
(2) Remove the column cover and disconnect the connector (D52).
(3) Disconnect the connector (D27, G19, H32) of the airbag control module, connect the connector (1AG) in the test harness AG, and release the short mechanism of the connectors.
(4) Disconnect the connector from the passenger's airbag module.
(5) Using a probe, measure the resistance between the terminals of connector (D30).
CAUTION:
When measuring the resistance, make sure that the probe is inserted from the back side (harness side) of the connector. Also, do not insert the probe forcibly.

Resistance

Inspection terminals	Inspection conditions	Standard value
(D30) No. 3 - (D30) No. 4	Always	1 MΩ or more

Captions in illustration

*1	Passenger's airbag module
*2	Airbag control module
*3	Airbag main harness
*a	Passenger's airbag module connector
➡	Release the short mechanism.

NG → Replace the airbag main harness along with the body harness.

OK

3	Check airbag control module.

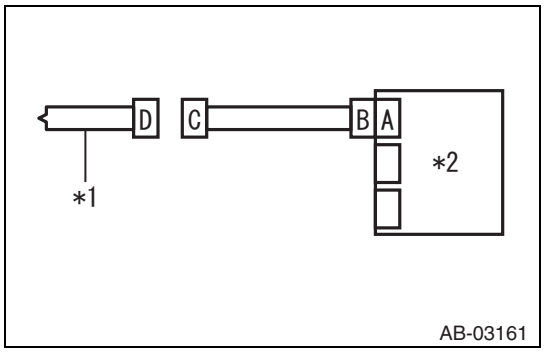

(1) Disconnect the test harness from the connector B.
(2) Connect the connector B to the airbag control module.
(3) Connect the driver's airbag module connector (D52).
(4) Connect the battery ground terminal and turn the ignition switch to ON.
(5) Perform the reproduction procedure.
(6) Read the DTC. (Current malfunction)
Criteria: DTC B1815 is not displayed.

Captions in illustration

*1	Passenger's airbag module
*2	Airbag control module

NG → Replace the airbag control module.

OK

RS

4	Check passenger's airbag module.

(1) Turn the ignition switch to OFF, disconnect the battery ground terminal, and wait for 60 seconds or more.
(2) Connect the passenger's airbag module connector (D30).
(3) Connect the battery ground terminal, and clear the memory.
(4) Perform the reproduction procedure.
(5) Read the DTC. (Current malfunction)
Criteria: DTC B1815 is not displayed.

NG → Replace the passenger's airbag module.

OK

5	Check DTC

Criteria: No other DTC is displayed.

NG → Perform diagnosis for the displayed DTC.

OK

Complete

RS

DTC	B1816	Open in passenger's airbag dual stage - 2nd step

Circuit description

DTC No.	DTC detected item	Faulty part
B1816	• Airbag main harness circuit is open. • Airbag module harness (passenger's side) circuit is open. • Passenger's airbag module is faulty. • Airbag control module is faulty.	• Passenger's airbag module • Airbag control module • Airbag main harness

Circuit figure

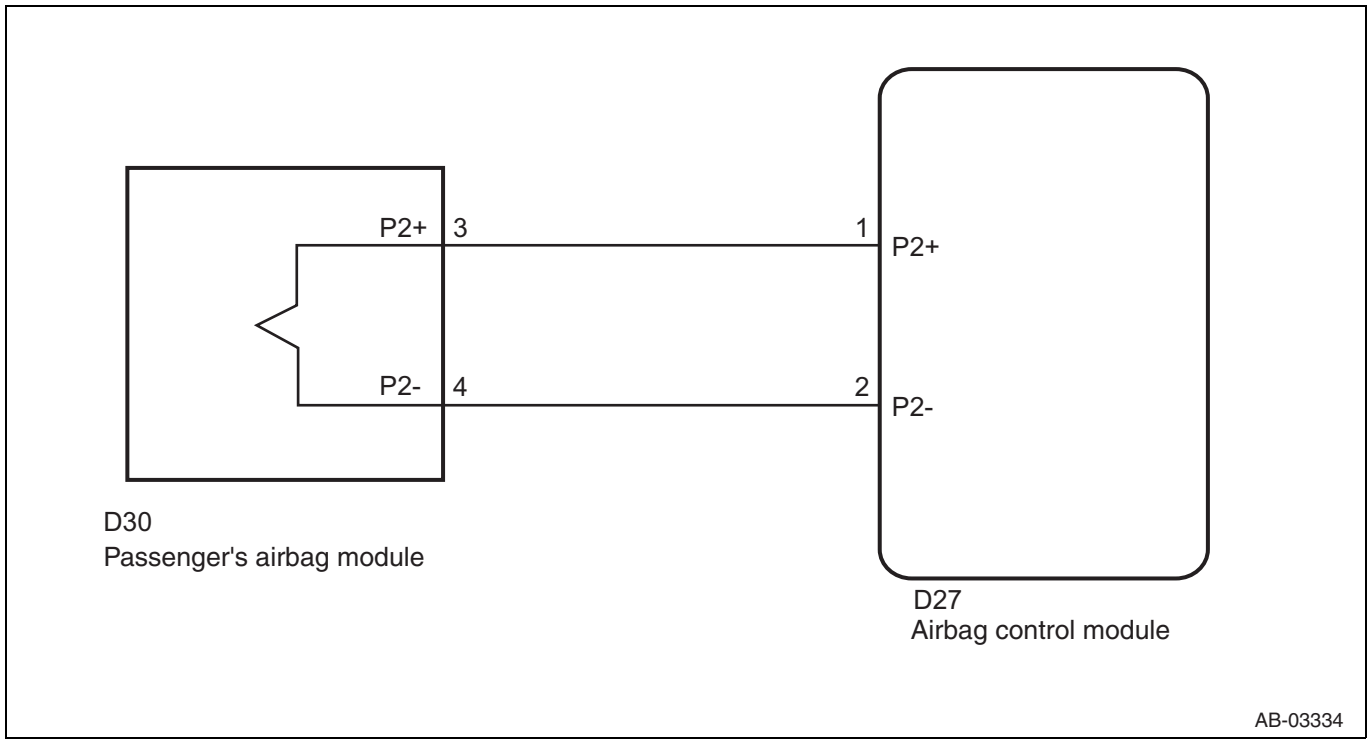

Inspection steps

CAUTION:

Before performing the diagnosis, refer to the precautions.

RS

1	Check poor contact of connectors.

(1) Check for poor contact of the connectors between the airbag control module and the passenger's airbag module.

Criteria: No fault is found.

NG → Replace the airbag main harness along with the body harness.

OK

2	Check airbag main harness (passenger's airbag harness).

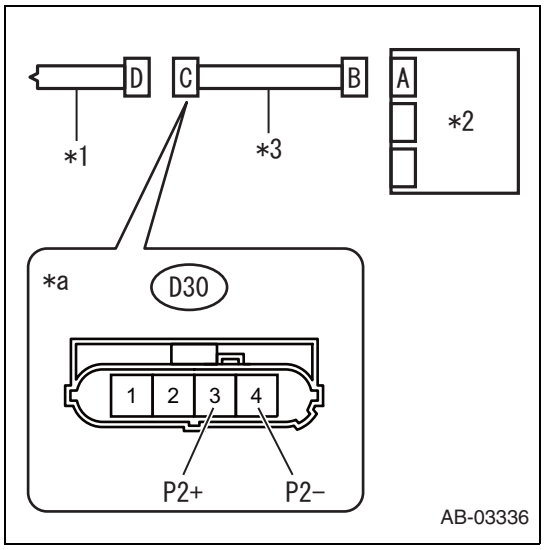

(1) Turn the ignition switch to OFF, disconnect the battery ground terminal, and wait for 60 seconds or more.
(2) Remove the column cover and disconnect the connector (D52).
(3) Disconnect the connector from the passenger's airbag module.
(4) Disconnect the connector B from the airbag control module.
(5) Using a probe, measure the resistance between the terminals of connector (D30).
CAUTION:
When measuring the resistance, make sure that the probe is inserted from the back side (harness side) of the connector. Also, do not insert the probe forcibly.

Resistance

Inspection terminals	Inspection conditions	Standard value
(D30) No. 3 - (D30) No. 4	Always	Less than 10 Ω

Criteria: Airbag warning light remains on even after 6 seconds have passed.

Captions in illustration

*1	Passenger's airbag module
*2	Airbag control module
*3	Airbag main harness
*a	Passenger's airbag module connector

NG → Replace the airbag main harness along with the body harness.

OK

3	Check DTC

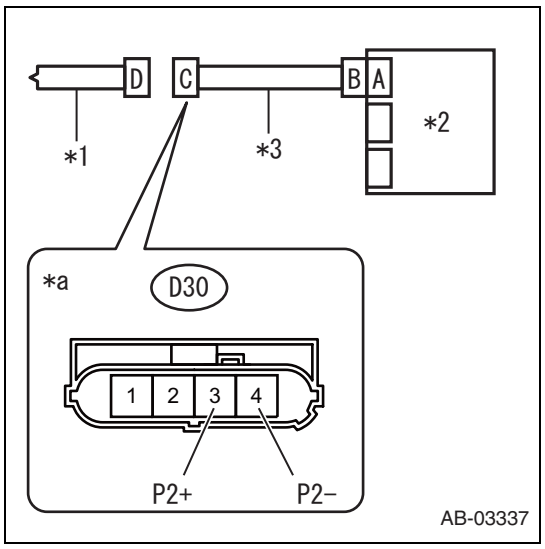

(1) Connect the connector B to the airbag control module.
(2) Connect the driver's airbag module connector (D52).
(3) Using a probe, short-circuit the terminals 3 and 4 of the connector (D30).
CAUTION:
When short-circuiting the terminals, make sure that the probe is inserted from the back side (harness side) of the connector. Also, do not insert the probe forcibly.
(4) Connect the battery ground terminal and turn the ignition switch to ON.
(5) Perform the reproduction procedure.
(6) Read the DTC. (Current malfunction)
Criteria: DTC B1816 is not displayed.

Captions in illustration

*1	Passenger's airbag module
*2	Airbag control module

NG → Replace the airbag control module.

OK

RS

4	Check passenger's airbag module.

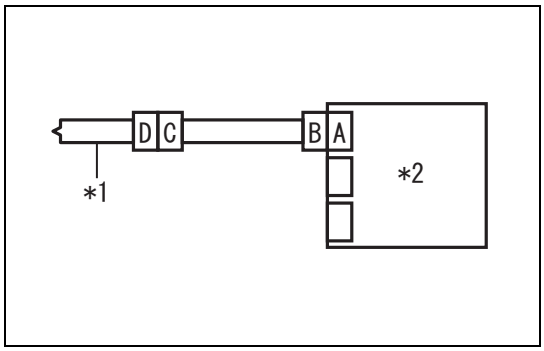

(1) Turn the ignition switch to OFF, disconnect the battery ground terminal, and wait for 60 seconds or more.
(2) Connect the passenger's airbag module connector (D30).
(3) Connect the battery ground terminal, and clear the memory.
(4) Perform the reproduction procedure.
(5) Read the DTC. (Current malfunction)
Criteria: DTC B1816 is not displayed.

Captions in illustration

*1	Passenger's airbag module
*2	Airbag control module

NG → Replace the passenger's airbag module.

OK

5	Check DTC

Criteria: No other DTC is displayed.

NG → Perform diagnosis for the displayed DTC.

OK

Complete

DTC	B1817	Short in passenger's airbag dual stage - 2nd step (to ground)

Circuit description

DTC No.	DTC detected item	Faulty part
B1817	• Airbag main harness circuit is shorted to ground. • Airbag module harness (passenger's side) circuit is shorted to ground. • Passenger's airbag module is faulty. • Airbag control module is faulty.	• Passenger's airbag module • Airbag control module • Airbag main harness

Circuit figure

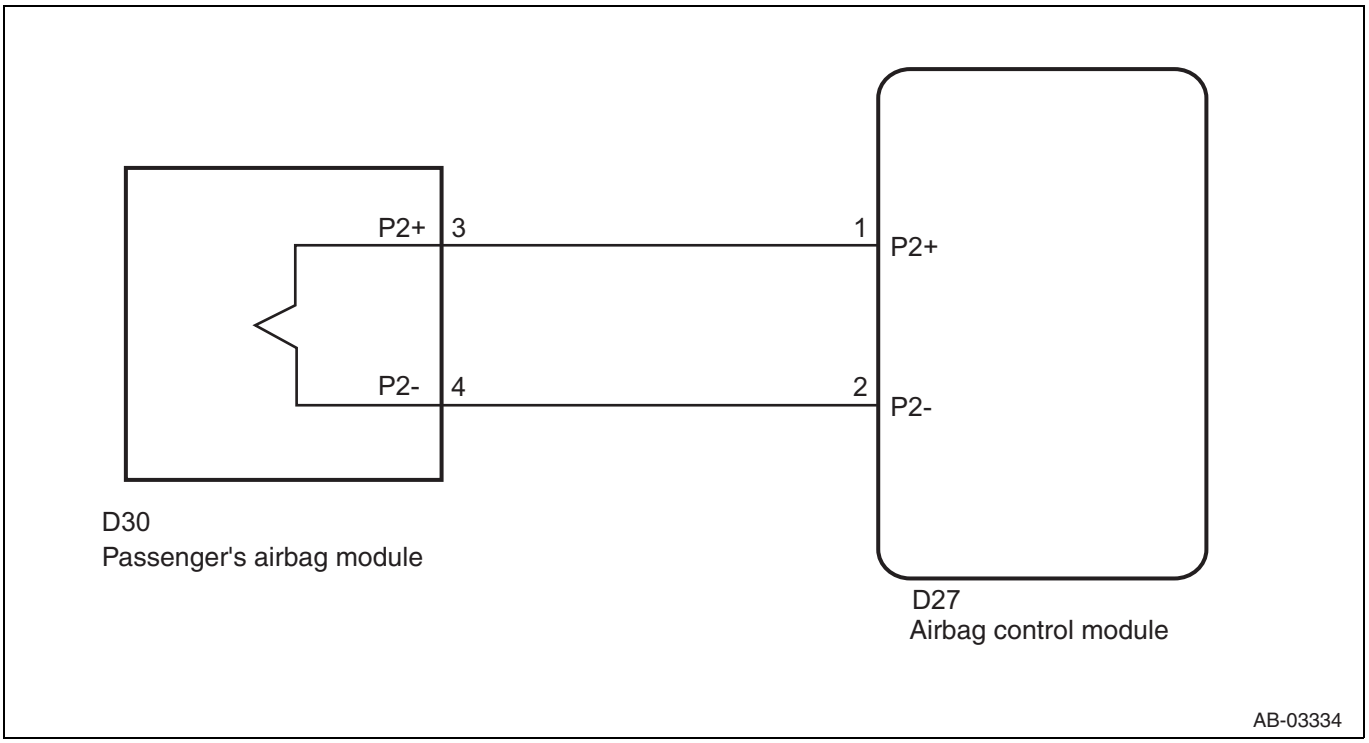

Inspection steps

RS

CAUTION:
Before performing the diagnosis, refer to the precautions.

1	Check poor contact of connectors.

(1) Check for poor contact of the connectors between the airbag control module and the passenger's airbag module.
Criteria: No fault is found.

NG → Replace the airbag main harness along with the body harness.

OK

2	Check airbag main harness (passenger's airbag harness).

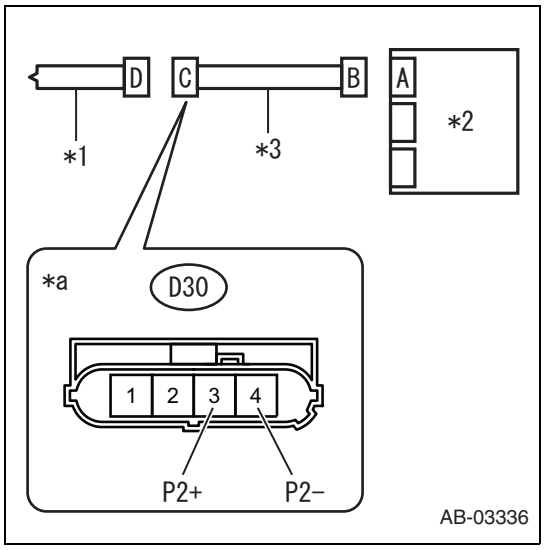

(1) Turn the ignition switch to OFF, disconnect the battery ground terminal, and wait for 60 seconds or more.
(2) Remove the column cover and disconnect the connector (D52).
(3) Disconnect the connector from the passenger's airbag module.
(4) Disconnect the connector B from the airbag control module.
(5) Using a probe, measure the resistance between the terminals.
CAUTION:
When measuring the resistance, make sure that the probe is inserted from the back side (harness side) of the connector. Also, do not insert the probe forcibly.

Resistance

Inspection terminals	Inspection conditions	Standard value
(D30) No. 3 - chassis ground	Always	1 MΩ or more
(D30) No. 4 - chassis ground	Always	1 MΩ or more

Captions in illustration

*1	Passenger's airbag module
*2	Airbag control module
*3	Airbag main harness
*a	Passenger's airbag module connector

NG → Replace the airbag main harness along with the body harness.

OK

3	Check DTC

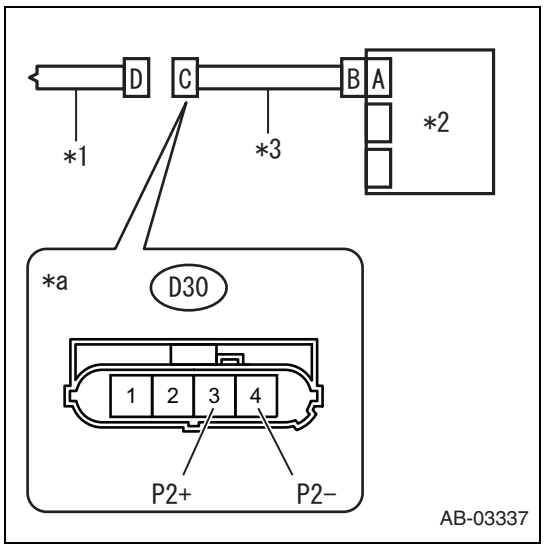

(1) Connect the connector B to the airbag control module.
(2) Connect the driver's airbag module connector (D52).
(3) Using a probe, short-circuit the terminals 3 and 4 of the connector (D30).
CAUTION:
When short-circuiting the terminals, make sure that the probe is inserted from the back side (harness side) of the connector. Also, do not insert the probe forcibly.
(4) Connect the battery ground terminal and turn the ignition switch to ON.
(5) Perform the reproduction procedure.
(6) Read the DTC. (Current malfunction)
Criteria: DTC B1817 is not displayed.

Captions in illustration

*1	Passenger's airbag module
*2	Airbag control module
*3	Airbag main harness
*a	Passenger's airbag module connector

NG → Replace the airbag control module.

OK

RS

4	Check passenger's airbag module.

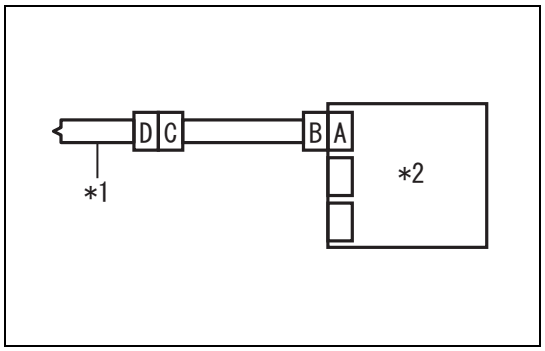

(1) Turn the ignition switch to OFF, disconnect the battery ground terminal, and wait for 60 seconds or more.
(2) Connect the passenger's airbag module connector (D30).
(3) Connect the battery ground terminal, and clear the memory.
(4) Perform the reproduction procedure.
(5) Read the DTC. (Current malfunction)
Criteria: DTC B1817 is not displayed.

Captions in illustration

*1	Passenger's airbag module
*2	Airbag control module

NG → Replace the passenger's airbag module.

OK

5	Check DTC

Criteria: No other DTC is displayed.

NG → Perform diagnosis for the displayed DTC.

OK

RS

Complete

DTC	B1818	Short in passenger's airbag dual stage - 2nd step circuit (to +B)

Circuit description

DTC No.	DTC detected item	Faulty part
B1818	• Airbag main harness circuit is shorted to power supply. • Airbag module harness (passenger's side) circuit is shorted to power supply. • Passenger's airbag module is faulty. • Airbag control module is faulty.	• Passenger's airbag module • Airbag control module • Airbag main harness

Circuit figure

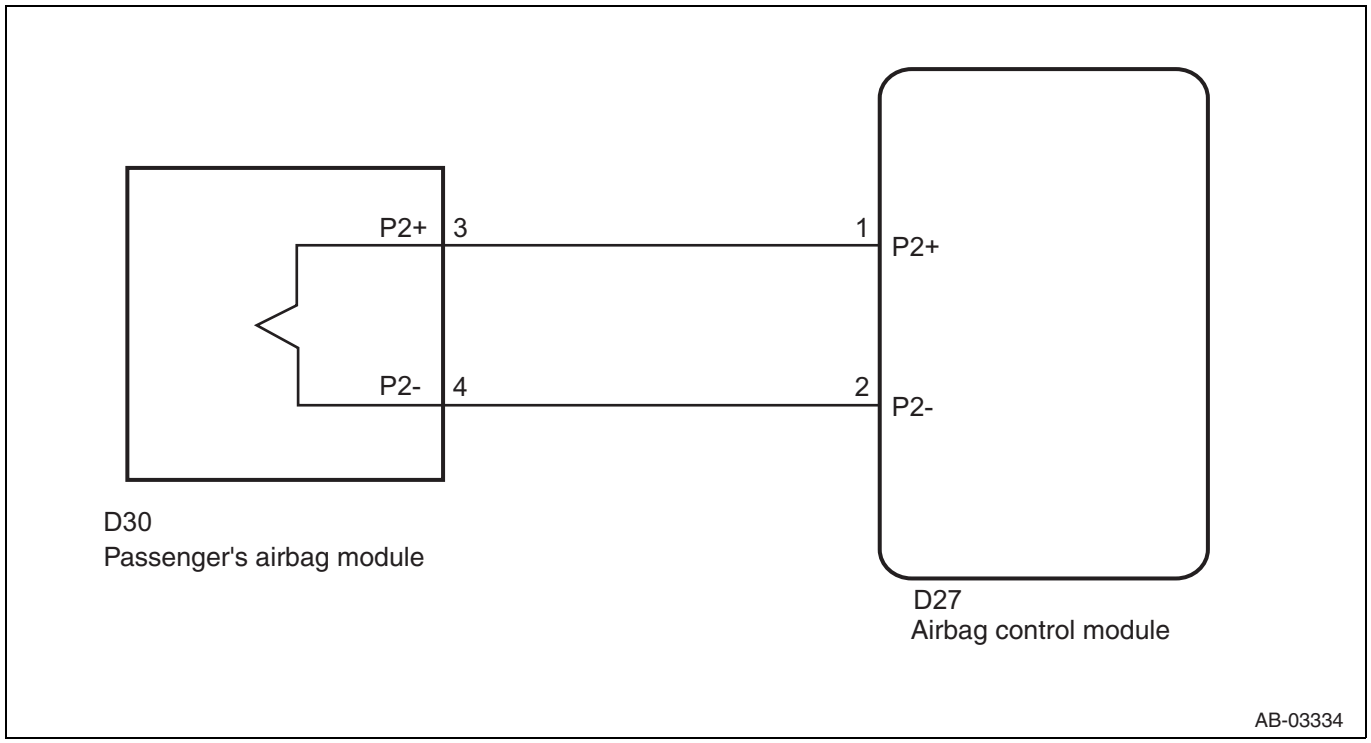

Inspection steps

CAUTION:

Before performing the diagnosis, refer to the precautions.

RS

1	Check poor contact of connectors.

(1) Check for poor contact of the connectors between the airbag control module and the passenger's airbag module.

Criteria: No fault is found.

NG → Replace the airbag main harness along with the body harness.

OK

2	Check airbag main harness (passenger's airbag harness).

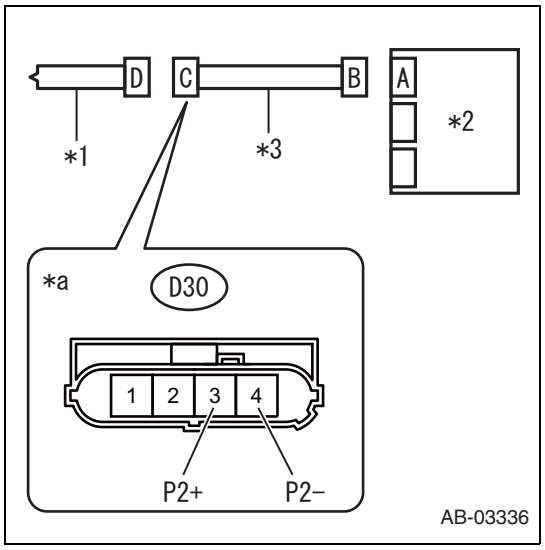

(1) Turn the ignition switch to OFF, disconnect the battery ground terminal, and wait for 60 seconds or more.
(2) Remove the column cover and disconnect the connector (D52).
(3) Disconnect the connector from the passenger's airbag module.
(4) Disconnect the connector B from the airbag control module.
(5) Using a probe, measure the voltage between the terminals.
CAUTION:
When measuring the voltage, make sure that the probe is inserted from the back side (harness side) of the connector. Also, do not insert the probe forcibly.

Voltage

Inspection terminals	Inspection conditions	Standard value
(D30) No. 3 - chassis ground	IG ON	Less than 1 V
(D30) No. 4 - chassis ground	IG ON	Less than 1 V

Captions in illustration

*1	Passenger's airbag module
*2	Airbag control module
*3	Airbag main harness
*a	Passenger's airbag module connector

RS

NG → Replace the airbag main harness along with the body harness.

OK

3	Check DTC

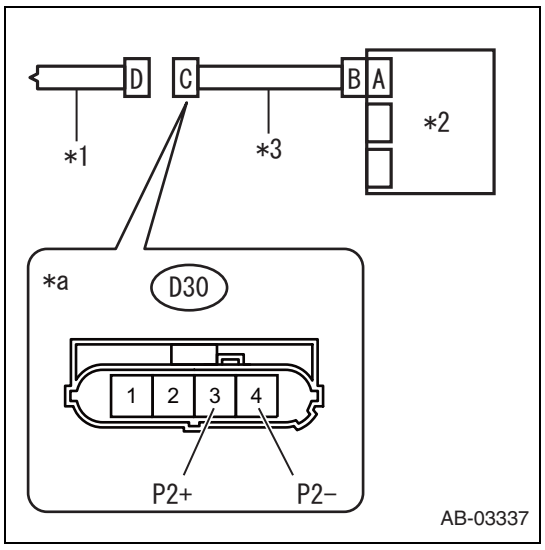

(1) Turn the ignition switch to OFF, disconnect the battery ground terminal, and wait for 60 seconds or more.
(2) Connect the connector B to the airbag control module.
(3) Connect the driver's airbag module connector (D52).
(4) Using a probe, short-circuit the terminals 3 and 4 of the connector (D30).
CAUTION:
When short-circuiting the terminals, make sure that the probe is inserted from the back side (harness side) of the connector. Also, do not insert the probe forcibly.
(5) Connect the battery ground terminal and turn the ignition switch to ON.
(6) Perform the reproduction procedure.
(7) Read the DTC. (Current malfunction)
Criteria: DTC B1818 is not displayed.

Captions in illustration

*1	Passenger's airbag module
*2	Airbag control module
*3	Airbag main harness
*a	Passenger's airbag module connector

NG → Replace the airbag control module.

OK

4	Check passenger's airbag module.

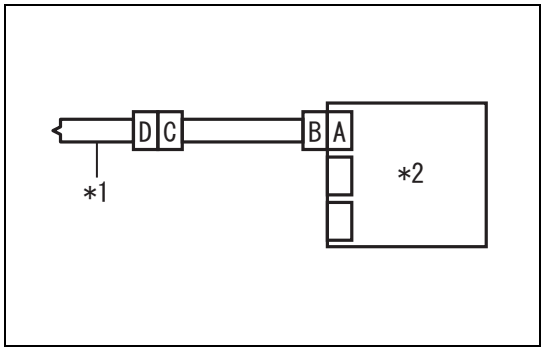

(1) Turn the ignition switch to OFF, disconnect the battery ground terminal, and wait for 60 seconds or more.
(2) Connect the passenger's airbag module connector (D30).
(3) Connect the battery ground terminal, and clear the memory.
(4) Perform the reproduction procedure.
(5) Read the DTC. (Current malfunction)
Criteria: DTC B1818 is not displayed.

Captions in illustration

*1	Passenger's airbag module
*2	Airbag control module

NG → Replace the passenger's airbag module.

OK

5	Check DTC

Criteria: No other DTC is displayed.

NG → Perform diagnosis for the displayed DTC.

OK

Complete

DTC	B1820	Short in side airbag RH

Circuit description

DTC No.	DTC detected item	Faulty part
B1820	• Side airbag harness RH circuit is shorted • Side airbag module RH is faulty. • Airbag control module is faulty.	• Side airbag module RH • Airbag control module • Airbag rear harness

Circuit figure

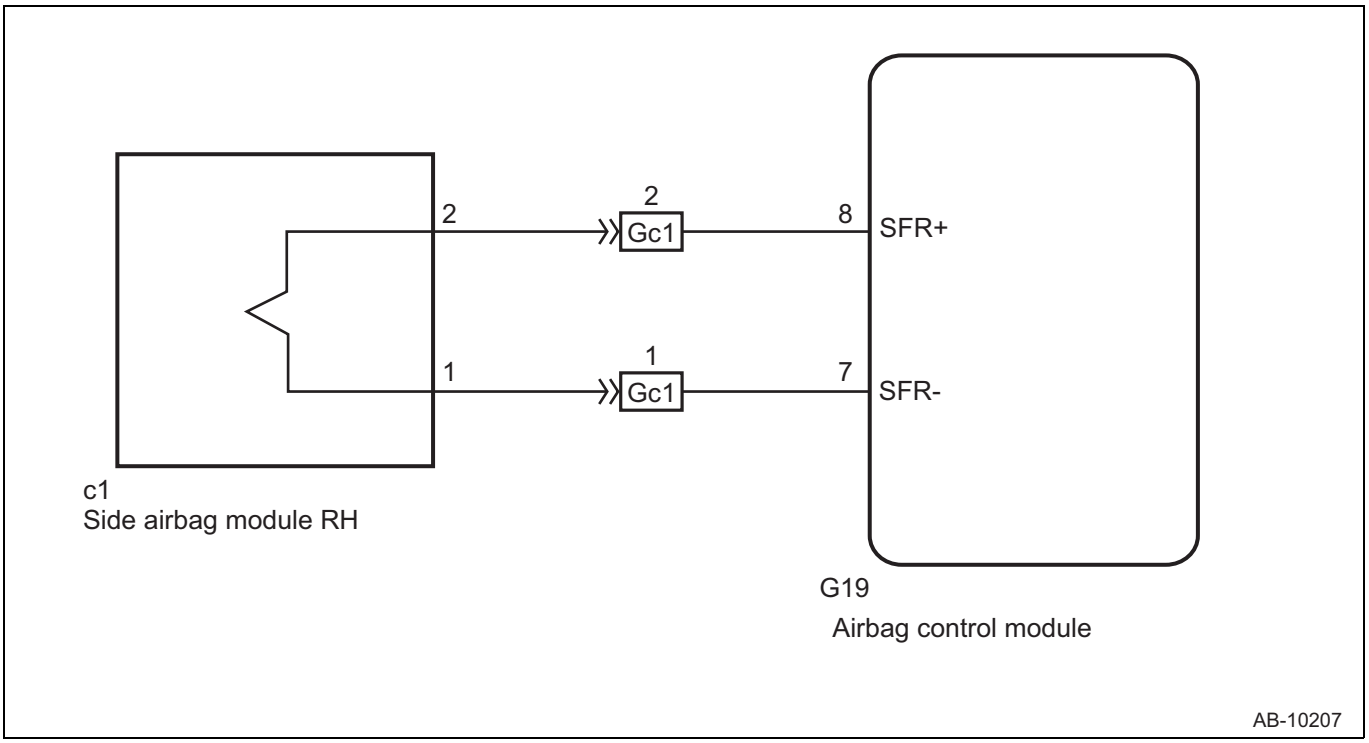

Inspection steps

RS

CAUTION:
Before performing the diagnosis, refer to the precautions.

1	Check poor contact of connectors.

(1) Check for poor contact of the connectors between the airbag control module and the side airbag module.
Criteria: No fault is found.

NG → Replace the airbag rear harness along with the body harness.

OK

2	Check airbag rear harness (side airbag module harness RH).

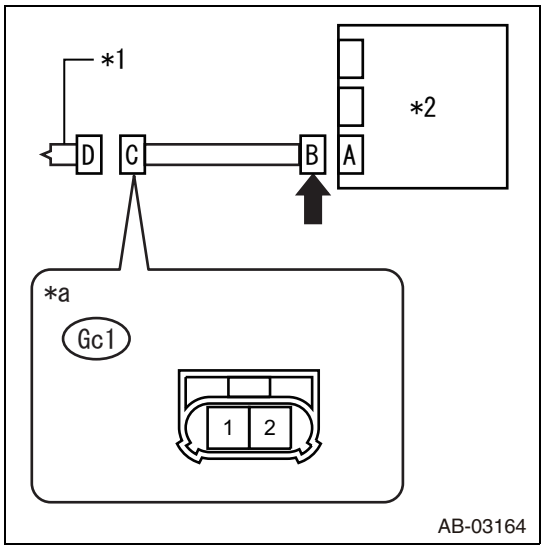

(1) Turn the ignition switch to OFF, disconnect the battery ground terminal, and wait for 60 seconds or more.
(2) Disconnect the connector (Gc1) of the side airbag module RH.
(3) Disconnect the connector (D27, G19, H32) of the airbag control module, connect the connector (1AG) in the test harness AG, and release the short mechanism of the connectors.
(4) Disconnect the connector (G17) of the seat belt pretensioner RH.
(5) Disconnect the connector (G11) of the curtain airbag module RH.
(6) Using a probe, measure the resistance between the terminals of connector C.
CAUTION:
When measuring the resistance, make sure that the probe is inserted from the back side (harness side) of the connector. Also, do not insert the probe forcibly.

Resistance

Inspection terminals	Inspection conditions	Standard value
(Gc1) No. 1 - (Gc1) No. 2	Always	1 MΩ or more

Captions in illustration

*1	Side airbag module RH
*2	Airbag control module
*a	Side airbag module connector
➡	Release the short mechanism.

NG → Replace the airbag rear harness along with the body harness.

OK

3	Check airbag control module.

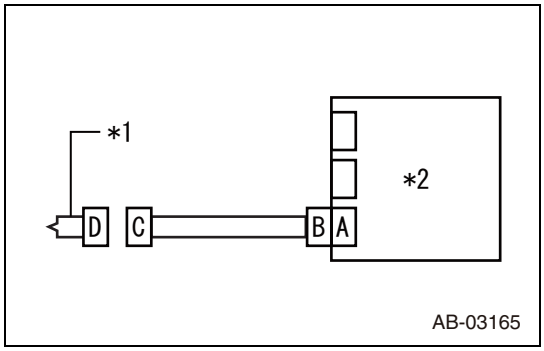

(1) Disconnect the test harness from the connector B.
(2) Connect the connector B to the airbag control module.
(3) Connect the connector (G17) of the seat belt pretensioner RH.
(4) Connect the connector (G11) of the curtain airbag module RH.
(5) Connect the battery ground terminal and turn the ignition switch to ON.
(6) Perform the reproduction procedure.
(7) Read the DTC. (Current malfunction)
Criteria: DTC B1820 is not displayed.

Captions in illustration

*1	Side airbag module RH
*2	Airbag control module

NG → Replace the airbag control module.

OK

RS

4	Check side airbag module.

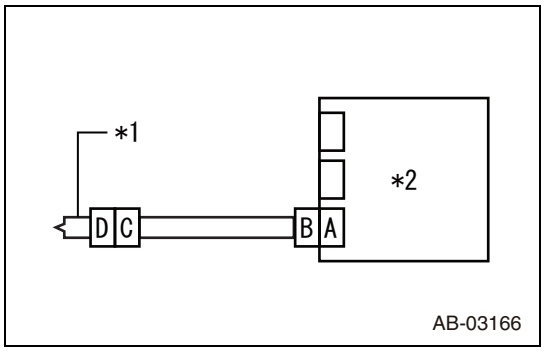

(1) Turn the ignition switch to OFF, disconnect the battery ground terminal, and wait for 60 seconds or more.
(2) Connect the connector (Gc1) of the side airbag module RH.
(3) Connect the battery ground terminal, and clear the memory.
(4) Perform the reproduction procedure.
(5) Read the DTC. (Current malfunction)
Criteria: DTC B1820 is not displayed.

Captions in illustration

*1	Side airbag module RH
*2	Airbag control module

NG → Replace the side airbag module.

OK

5	Check DTC

Criteria: No other DTC is displayed.

NG → Perform diagnosis for the displayed DTC.

OK

RS

Complete

DTC	B1821	Open in side airbag RH

Circuit description

DTC No.	DTC detected item	Faulty part
B1821	• Side airbag harness RH circuit is open. • Side airbag module RH is faulty. • Airbag control module is faulty.	• Side airbag module RH • Airbag control module • Airbag rear harness

Circuit figure

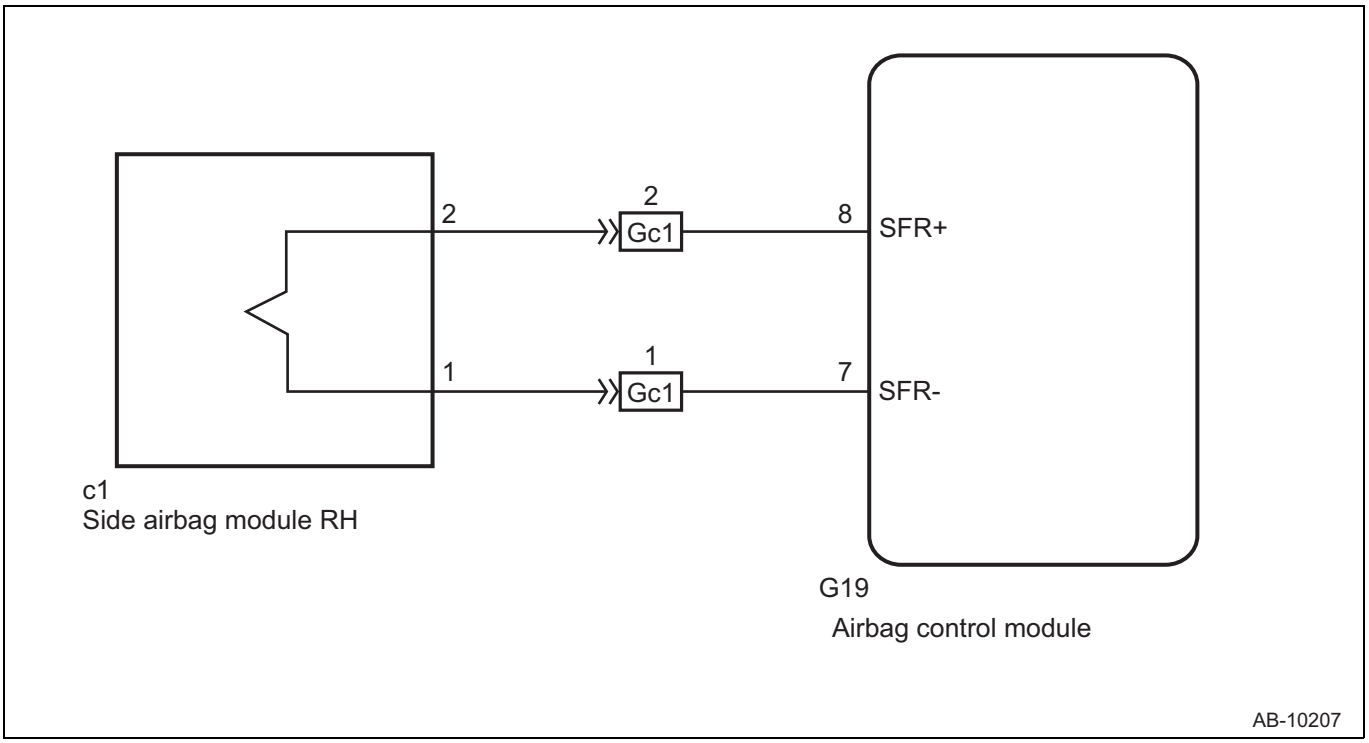

Inspection steps

CAUTION:

Before performing the diagnosis, refer to the precautions.

RS

1	Check poor contact of connectors.

(1) Check for poor contact of the connectors between the airbag control module and the side airbag module.

Criteria: No fault is found.

NG → Replace the airbag rear harness along with the body harness.

OK

2	Check airbag rear harness (side airbag module harness RH).

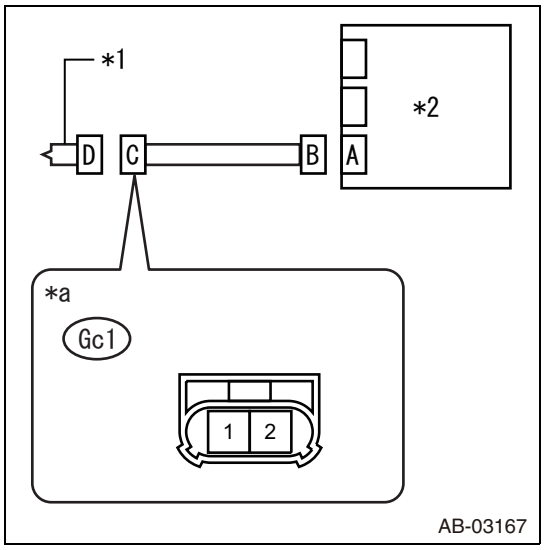

(1) Turn the ignition switch to OFF, disconnect the battery ground terminal, and wait for 60 seconds or more.
(2) Disconnect the connector (Gc1) of the side airbag module RH.
(3) Disconnect the connector (D27, G19, H32) from the airbag control module.
(4) Disconnect the connector (G17) of the seat belt pretensioner RH.
(5) Disconnect the connector (G11) of the curtain airbag module RH.
(6) Using a probe, measure the resistance between the terminals of connector C.
CAUTION:
When measuring the resistance, make sure that the probe is inserted from the back side (harness side) of the connector. Also, do not insert the probe forcibly.

Resistance

Inspection terminals	Inspection conditions	Standard value
(Gc1) No. 1 - (Gc1) No. 2	Always	Less than 10 Ω

Captions in illustration

*1	Side airbag module RH
*2	Airbag control module
*a	Side airbag module connector

NG → Replace the airbag rear harness along with the body harness.

OK

3	Check airbag control module.

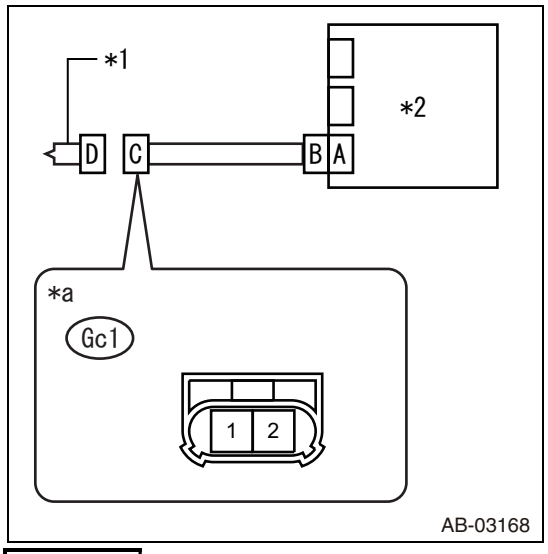

(1) Connect the connector B to the airbag control module.
(2) Connect the connector (G17) of the seat belt pretensioner RH.
(3) Connect the connector (G11) of the curtain airbag module RH.
(4) Using a test harness AT, short-circuit the terminals 1 and 2 of the connector C.
(5) Connect the battery ground terminal and turn the ignition switch to ON.
(6) Perform the reproduction procedure.
(7) Read the DTC. (Current malfunction)
Criteria: DTC B1821 is not displayed.

Captions in illustration

*1	Side airbag module RH
*2	Airbag control module
*a	Side airbag module connector

NG → Replace the airbag control module.

OK

RS

4	Check side airbag module.

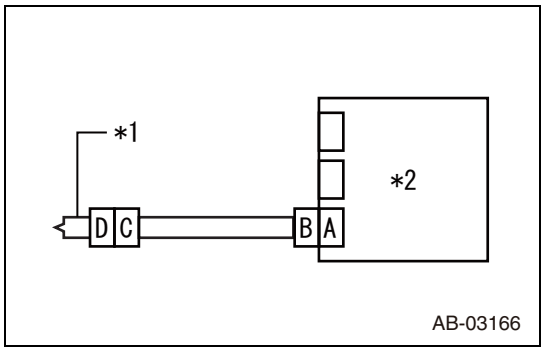

(1) Turn the ignition switch to OFF, disconnect the battery ground terminal, and wait for 60 seconds or more.
(2) Connect the connector (Gc1) of the side airbag module RH.
(3) Connect the battery ground terminal, and clear the memory.
(4) Perform the reproduction procedure.
(5) Read the DTC. (Current malfunction)
Criteria: DTC B1821 is not displayed.

Captions in illustration

*1	Side airbag module RH
*2	Airbag control module

NG → Replace the side airbag module.

OK

5	Check DTC

Criteria: No other DTC is displayed.

NG → Perform diagnosis for the displayed DTC.

OK

Complete

DTC	B1822	Short in side airbag RH (to ground)

Circuit description

DTC No.	DTC detected item	Faulty part
B1822	• Side airbag harness RH circuit is shorted to ground. • Side airbag module RH is faulty. • Airbag control module is faulty.	• Side airbag module RH • Airbag control module • Airbag rear harness

Circuit figure

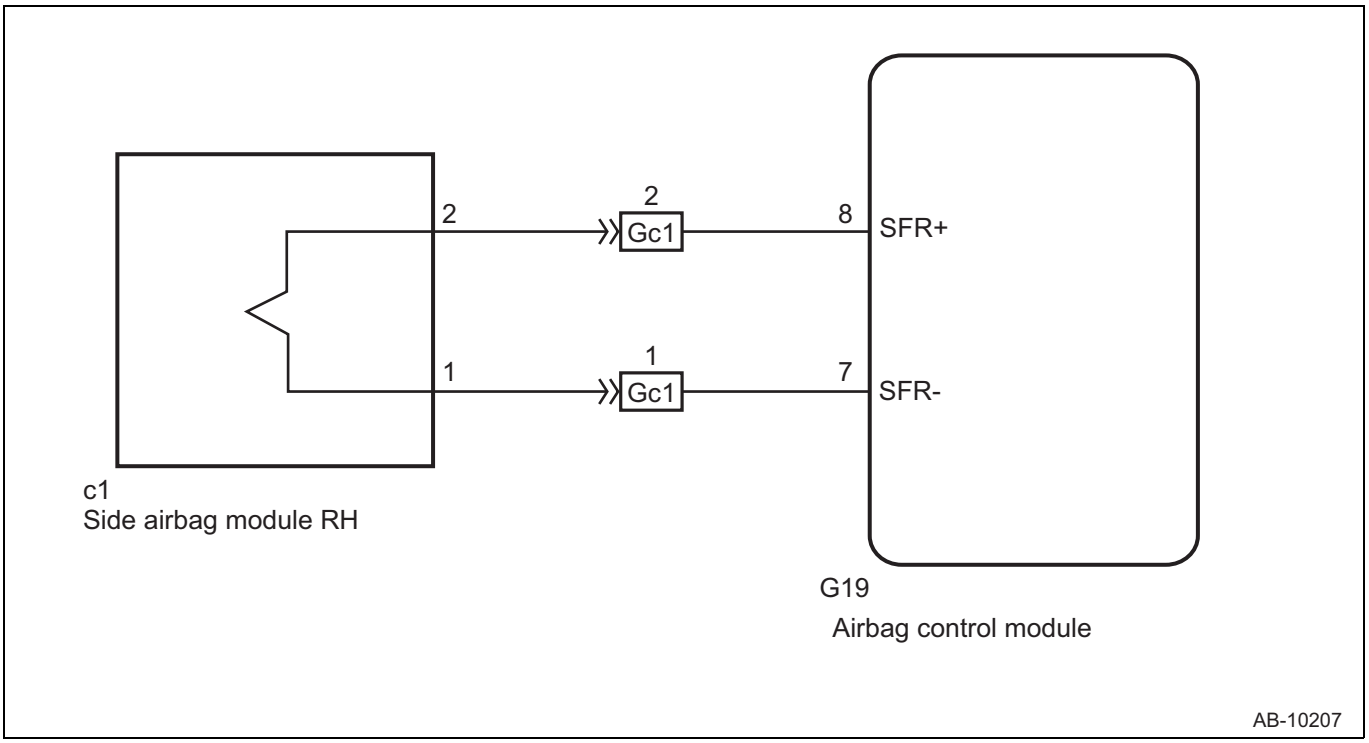

Inspection steps

RS

CAUTION:
Before performing the diagnosis, refer to the precautions.

1	Check poor contact of connectors.

(1) Check for poor contact of the connectors between the airbag control module and the side airbag module.
Criteria: No fault is found.

NG → Replace the airbag rear harness along with the body harness.

OK

2	Check airbag rear harness (side airbag module harness RH).

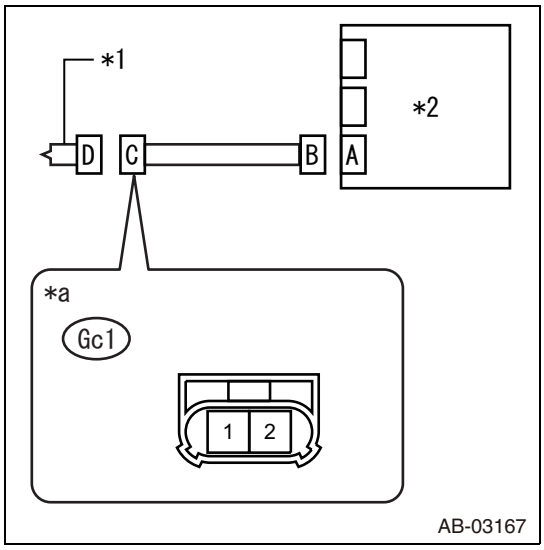

(1) Turn the ignition switch to OFF, disconnect the battery ground terminal, and wait for 60 seconds or more.
(2) Disconnect the connector (Gc1) of the side airbag module RH.
(3) Disconnect the connector (D27, G19, H32) from the airbag control module.
(4) Disconnect the connector (G17) of the seat belt pretensioner RH.
(5) Disconnect the connector (G11) of the curtain airbag module RH.
(6) Using a probe, measure the resistance between the terminals of connector C.
CAUTION:
When measuring the resistance, make sure that the probe is inserted from the back side (harness side) of the connector. Also, do not insert the probe forcibly.

Resistance

Inspection terminals	Inspection conditions	Standard value
(Gc1) No. 1 - chassis ground	Always	1 MΩ or more
(Gc1) No. 2 - chassis ground	Always	1 MΩ or more

Captions in illustration

*1	Side airbag module RH
*2	Airbag control module
*a	Side airbag module connector

NG → Replace the airbag rear harness along with the body harness.

OK

3	Check airbag control module.

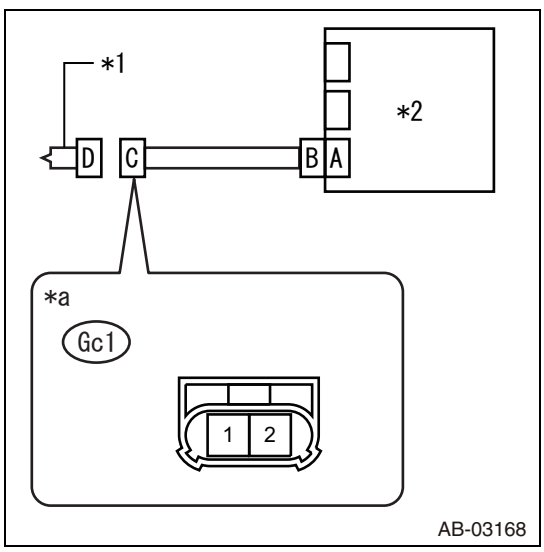

(1) Connect the connector B to the airbag control module.
(2) Connect the connector (G17) of the seat belt pretensioner RH.
(3) Connect the connector (G11) of the curtain airbag module RH.
(4) Using a test harness AT, short-circuit the terminals 1 and 2 of the connector C.
(5) Connect the battery ground terminal and turn the ignition switch to ON.
(6) Perform the reproduction procedure.
(7) Read the DTC. (Current malfunction)
Criteria: DTC B1822 is not displayed.

Captions in illustration

*1	Side airbag module RH
*2	Airbag control module
*a	Side airbag module connector

NG → Replace the airbag control module.

OK

RS

4	Check side airbag module.

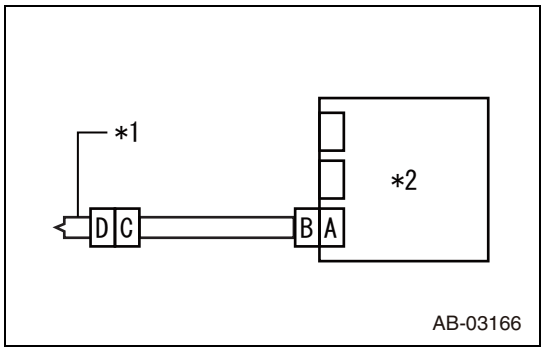

(1) Turn the ignition switch to OFF, disconnect the battery ground terminal, and wait for 60 seconds or more.
(2) Connect the connector (Gc1) of the side airbag module RH.
(3) Connect the battery ground terminal, and clear the memory.
(4) Perform the reproduction procedure.
(5) Read the DTC. (Current malfunction)
Criteria: DTC B1822 is not displayed.

Captions in illustration

*1	Side airbag module RH
*2	Airbag control module

NG → Replace the side airbag module.

OK

5	Check DTC

Criteria: No other DTC is displayed.

NG → Perform diagnosis for the displayed DTC.

OK

RS

Complete

DTC	B1823	Short in side airbag RH (to +B)

Circuit description

DTC No.	DTC detected item	Faulty part
B1823	• Side airbag harness RH is shorted to power supply. • Side airbag module RH is faulty. • Airbag control module is faulty.	• Side airbag module RH • Airbag control module • Airbag rear harness

Circuit figure

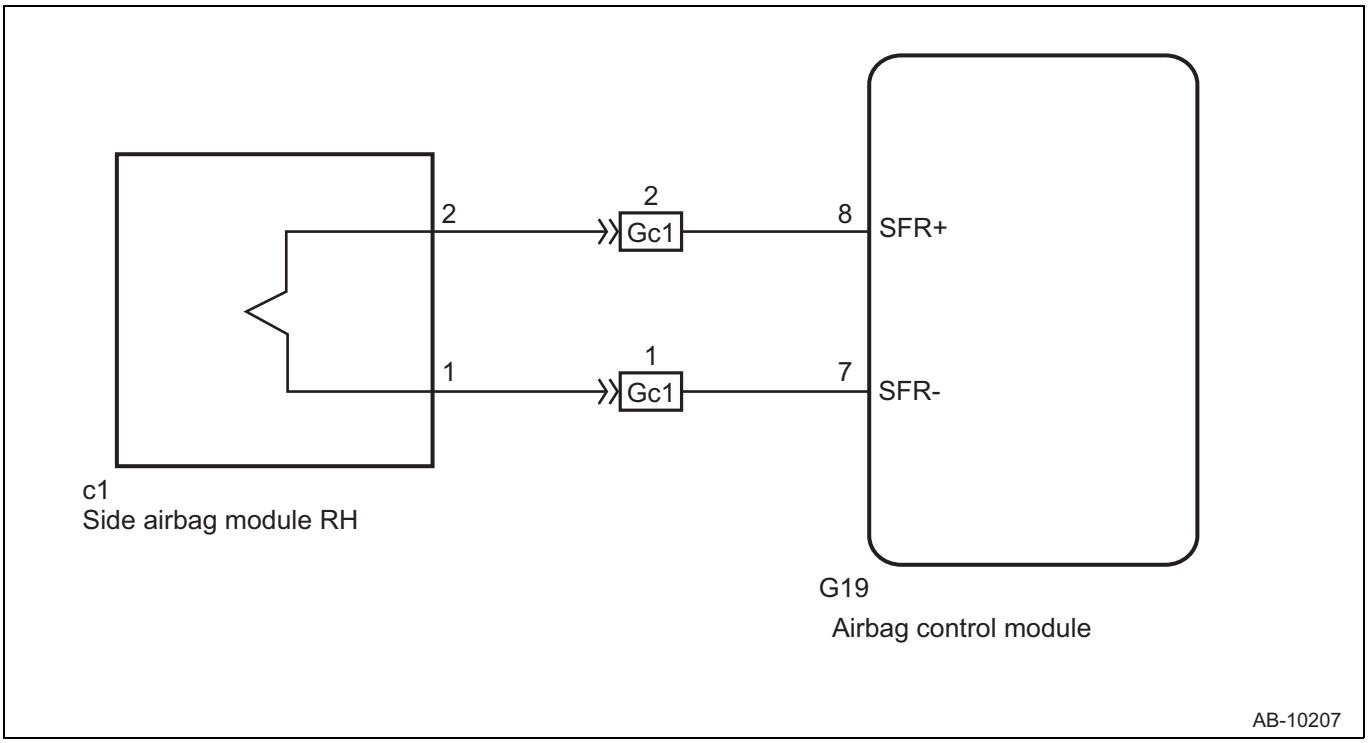

Inspection steps

CAUTION:

Before performing the diagnosis, refer to the precautions.

RS

1	Check poor contact of connectors.

(1) Check for poor contact of the connectors between the airbag control module and the side airbag module.

Criteria: No fault is found.

NG → Replace the airbag rear harness along with the body harness.

OK

2	Check airbag rear harness (side airbag module harness RH).

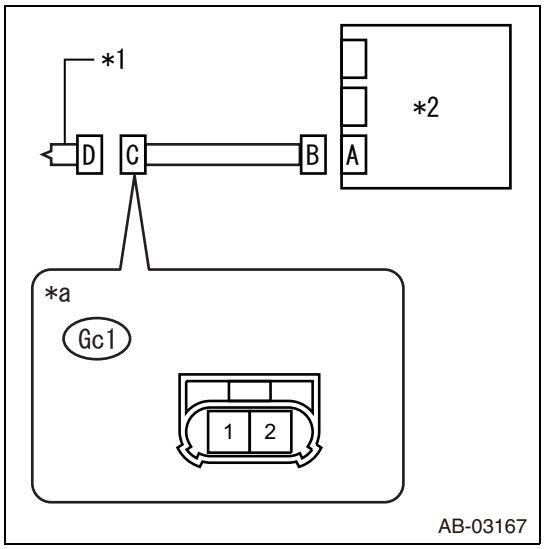

(1) Turn the ignition switch to OFF, disconnect the battery ground terminal, and wait for 60 seconds or more.
(2) Disconnect the connector (Gc1) of the side airbag module RH.
(3) Disconnect the connector (D27, G19, H32) from the airbag control module.
(4) Disconnect the connector (G17) of the seat belt pretensioner RH.
(5) Disconnect the connector (G11) of the curtain airbag module RH.
(6) Using a probe, measure the voltage between the terminals of connector C.
CAUTION:
When measuring the voltage, make sure that the probe is inserted from the back side (harness side) of the connector. Also, do not insert the probe forcibly.

Voltage

Inspection terminals	Inspection conditions	Standard value
(Gc1) No. 1 - chassis ground	IG ON	Less than 1 V
(Gc1) No. 2 - chassis ground	IG ON	Less than 1 V

Captions in illustration

*1	Side airbag module RH
*2	Airbag control module
*a	Side airbag module connector

NG → Replace the airbag rear harness along with the body harness.

OK

3	Check airbag control module.

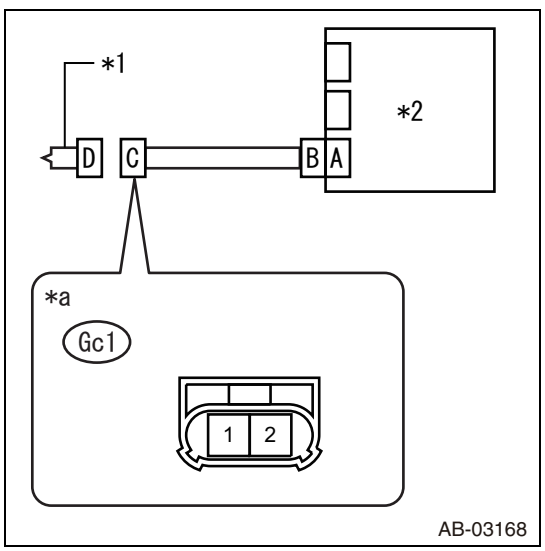

(1) Connect the connector B to the airbag control module.
(2) Connect the connector (G17) of the seat belt pretensioner RH.
(3) Connect the connector (G11) of the curtain airbag module RH.
(4) Using a test harness AT, short-circuit the terminals 1 and 2 of the connector C.
(5) Connect the battery ground terminal and turn the ignition switch to ON.
(6) Perform the reproduction procedure.
(7) Read the DTC. (Current malfunction)
Criteria: DTC B1823 is not displayed.

Captions in illustration

*1	Side airbag module RH
*2	Airbag control module
*a	Side airbag module connector

NG → Replace the airbag control module.

OK

RS

4	Check side airbag module.

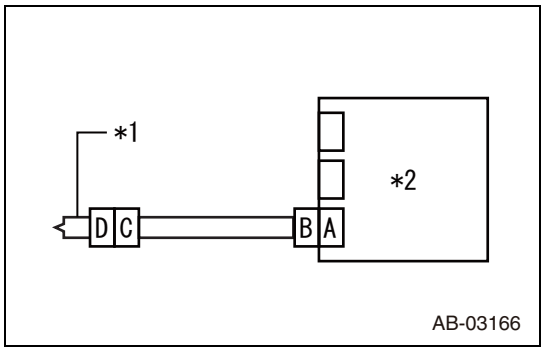

(1) Turn the ignition switch to OFF, disconnect the battery ground terminal, and wait for 60 seconds or more.
(2) Connect the connector (Gc1) of the side airbag module RH.
(3) Connect the battery ground terminal, and clear the memory.
(4) Perform the reproduction procedure.
(5) Read the DTC. (Current malfunction)
Criteria: DTC B1823 is not displayed.

Captions in illustration

*1	Side airbag module
*2	Airbag control module

NG → Replace the side airbag module.

OK

5	Check DTC

Criteria: No other DTC is displayed.

NG → Perform diagnosis for the displayed DTC.

OK

Complete

DTC	B1825	Short in side airbag LH

Circuit description

DTC No.	DTC detected item	Faulty part
B1825	• Side airbag harness LH circuit is shorted. • Side airbag module LH is faulty. • Airbag control module is faulty.	• Side airbag module LH • Airbag control module • Airbag rear harness

Circuit figure

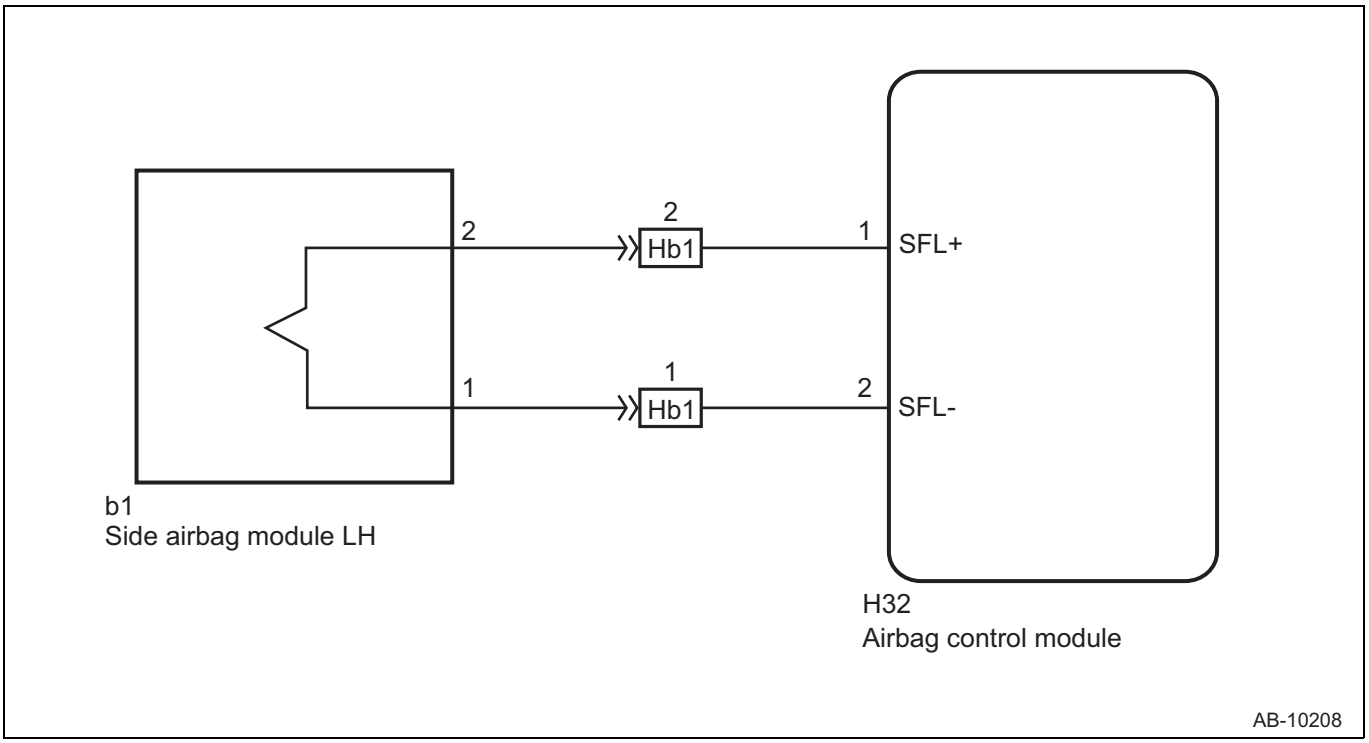

Inspection steps

RS

CAUTION:
Before performing the diagnosis, refer to the precautions.

1	Check poor contact of connectors.

(1) Check for poor contact of the connectors between the airbag control module and the side airbag module.
Criteria: No fault is found.

NG → Replace the airbag rear harness along with the body harness.

OK

2	Check airbag rear harness (side airbag module harness LH).

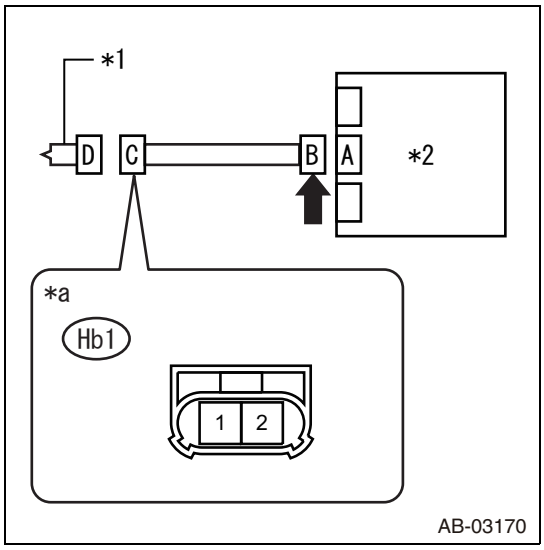

(1) Turn the ignition switch to OFF, disconnect the battery ground terminal, and wait for 60 seconds or more.
(2) Disconnect the connector (Hb1) of the side airbag module LH.
(3) Disconnect the connector (D27, G19, H32) of the airbag control module, connect the connector (1AG) in the test harness AG, and release the short mechanism of the connectors.
(4) Disconnect the connector (H22) of the seat belt pretensioner LH.
(5) Disconnect the connector (H30) of the curtain airbag module LH.
(6) Using a probe, measure the resistance between the terminals of connector C.
CAUTION:
When measuring the resistance, make sure that the probe is inserted from the back side (harness side) of the connector. Also, do not insert the probe forcibly.

Resistance

Inspection terminals	Inspection conditions	Standard value
(Hb1) No. 1 - (Hb1) No. 2	Always	1 MΩ or more

Captions in illustration

*1	Side airbag module LH
*2	Airbag control module
*a	Side airbag module connector
➡	Release the short mechanism.

NG → Replace the airbag rear harness along with the body harness.

OK

3	Check airbag control module.

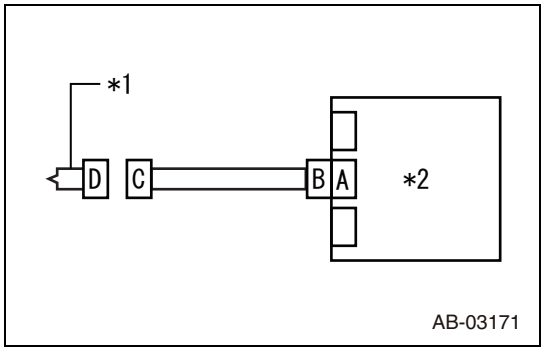

(1) Disconnect the test harness from the connector B.
(2) Connect the connector B to the airbag control module.
(3) Connect the connector (H22) of the seat belt pretensioner LH.
(4) Connect the connector (H30) of the curtain airbag module LH.
(5) Connect the battery ground terminal and turn the ignition switch to ON.
(6) Perform the reproduction procedure.
(7) Read the DTC. (Current malfunction)
Criteria: DTC B1825 is not displayed.

Captions in illustration

*1	Side airbag module LH
*2	Airbag control module

NG → Replace the airbag control module.

OK

RS

4	Check side airbag module.

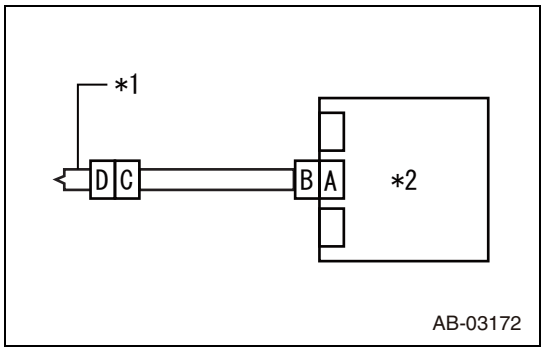

(1) Turn the ignition switch to OFF, disconnect the battery ground terminal, and wait for 60 seconds or more.
(2) Connect the side airbag module connector (Hb1).
(3) Connect the battery ground terminal, and clear the memory.
(4) Perform the reproduction procedure.
(5) Read the DTC. (Current malfunction)
Criteria: DTC B1825 is not displayed.

Captions in illustration

*1	Side airbag module LH
*2	Airbag control module

NG → Replace the side airbag module.

OK

5	Check DTC

Criteria: No other DTC is displayed.

NG → Perform diagnosis for the displayed DTC.

OK

Complete

DTC	B1826	Open in side airbag LH

Circuit description

DTC No.	DTC detected item	Faulty part
B1826	• Side airbag harness LH circuit is open. • Side airbag module LH is faulty. • Airbag control module is faulty.	• Side airbag module LH • Airbag control module • Airbag rear harness

RS

Circuit figure

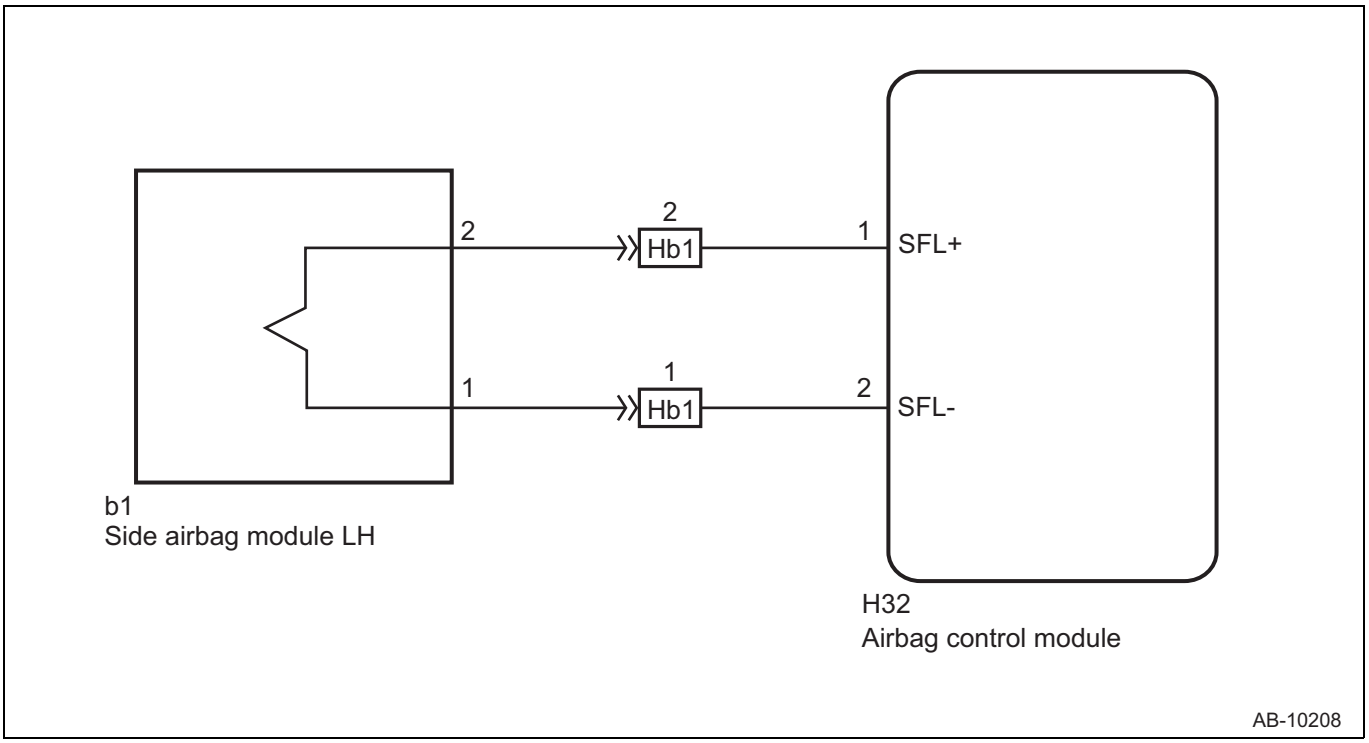

Inspection steps

CAUTION:

Before performing the diagnosis, refer to the precautions.

RS

1	Check poor contact of connectors.

(1) Check for poor contact of the connectors between the airbag control module and the side airbag module.

Criteria: No fault is found.

NG → Replace the airbag rear harness along with the body harness.

OK

2	Check airbag rear harness (side airbag module harness LH).

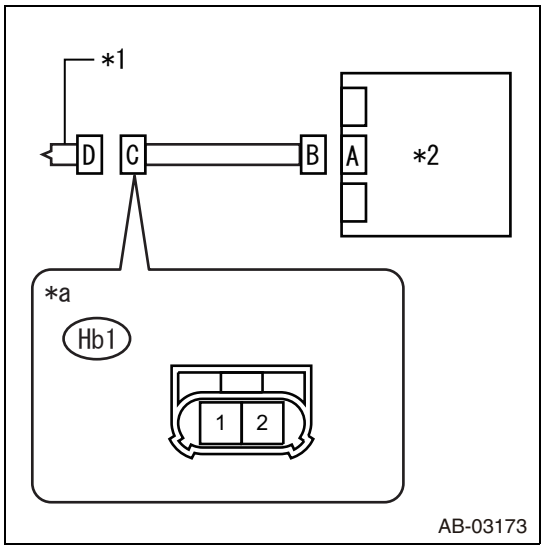

(1) Turn the ignition switch to OFF, disconnect the battery ground terminal, and wait for 60 seconds or more.
(2) Disconnect the connector (Hb1) of the side airbag module LH.
(3) Disconnect the connector (D27, G19, H32) from the airbag control module.
(4) Disconnect the connector (H22) of the seat belt pretensioner LH.
(5) Disconnect the connector (H30) of the curtain airbag module LH.
(6) Using a probe, measure the resistance between the terminals of connector C.
CAUTION:
When measuring the resistance, make sure that the probe is inserted from the back side (harness side) of the connector. Also, do not insert the probe forcibly.

Resistance

Inspection terminals	Inspection conditions	Standard value
(Hb1) No. 1 - (Hb1) No. 2	Always	Less than 10 Ω

Captions in illustration

*1	Side airbag module LH
*2	Airbag control module
*a	Side airbag module connector

NG → Replace the airbag rear harness along with the body harness.

OK

3	Check airbag control module.

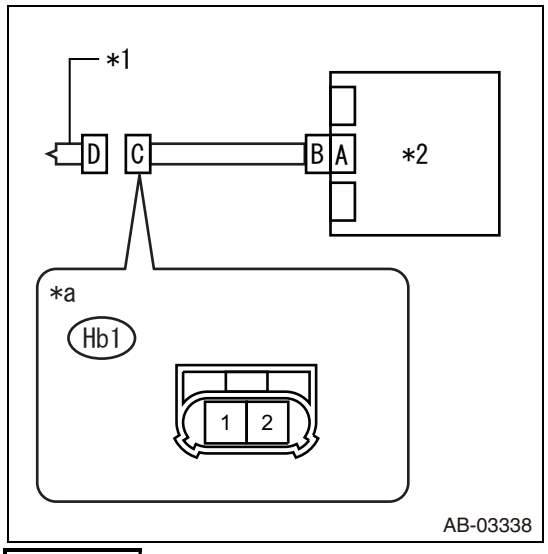

(1) Connect the connector B to the airbag control module.
(2) Connect the connector (H22) of the seat belt pretensioner LH.
(3) Connect the connector (H30) of the curtain airbag module LH.
(4) Using a test harness AT, short-circuit the terminals 1 and 2 of the connector C.
(5) Connect the battery ground terminal and turn the ignition switch to ON.
(6) Perform the reproduction procedure.
(7) Read the DTC. (Current malfunction)
Criteria: DTC B1826 is not displayed.

Captions in illustration

*1	Side airbag module LH
*2	Airbag control module
*a	Side airbag module connector

NG → Replace the airbag control module.

OK

RS

4	Check side airbag module.

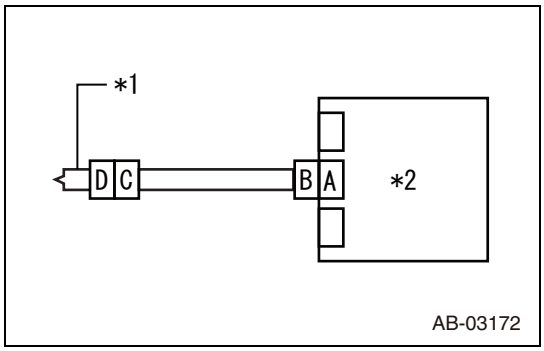

(1) Turn the ignition switch to OFF, disconnect the battery ground terminal, and wait for 60 seconds or more.
(2) Connect the side airbag module connector (Hb1).
(3) Connect the battery ground terminal, and clear the memory.
(4) Perform the reproduction procedure.
(5) Read the DTC. (Current malfunction)
Criteria: DTC B1826 is not displayed.

Captions in illustration

*1	Side airbag module LH
*2	Airbag control module

NG → Replace the side airbag module.

OK

5	Check DTC

Criteria: No other DTC is displayed.

NG → Perform diagnosis for the displayed DTC.

OK

Complete

DTC	B1827	Short in side airbag LH (to ground)

Circuit description

DTC No.	DTC detected item	Faulty part
B1827	• Side airbag harness LH circuit is shorted to ground. • Side airbag module LH is faulty. • Airbag control module is faulty.	• Side airbag module LH • Airbag control module • Airbag rear harness

Circuit figure

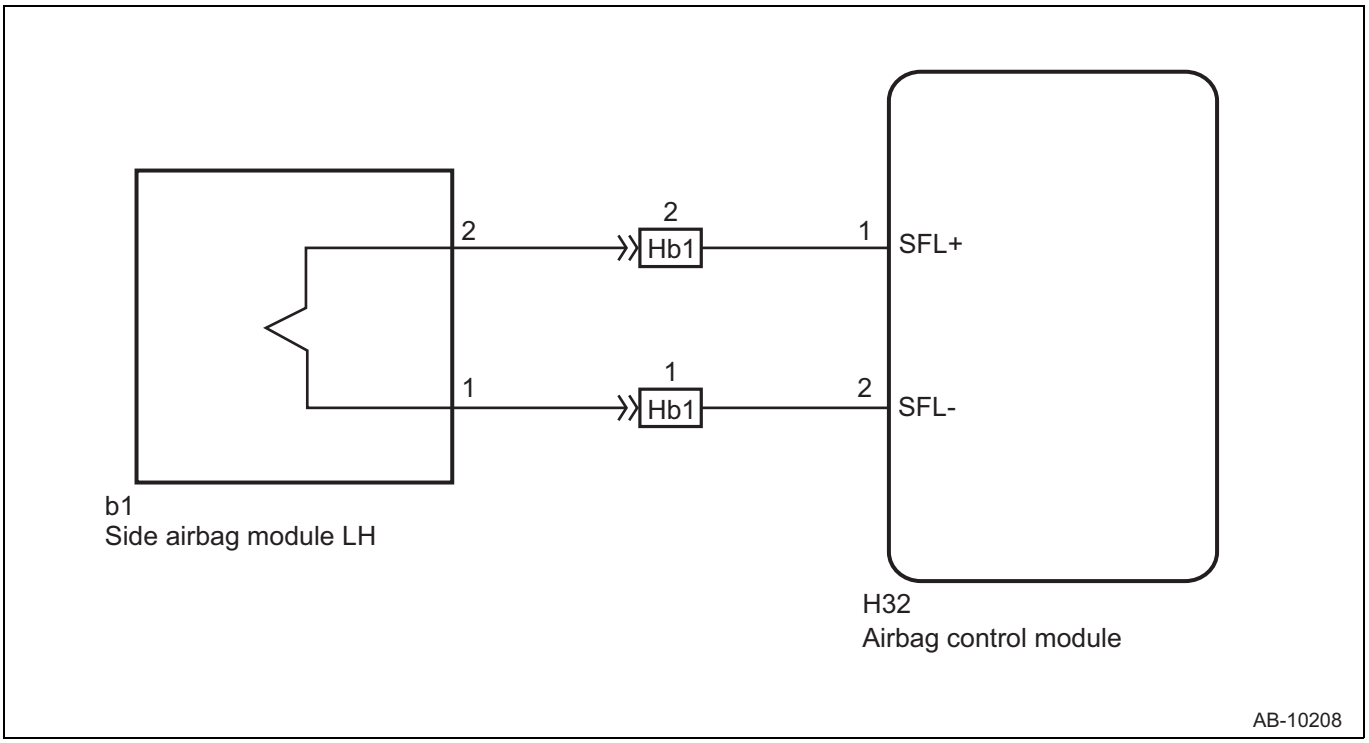

Inspection steps

RS

CAUTION:
Before performing the diagnosis, refer to the precautions.

1	Check poor contact of connectors.

(1) Check for poor contact of the connectors between the airbag control module and the side airbag module.
Criteria: No fault is found.

NG → Replace the airbag rear harness along with the body harness.

OK

2	Check airbag rear harness (side airbag module harness LH).

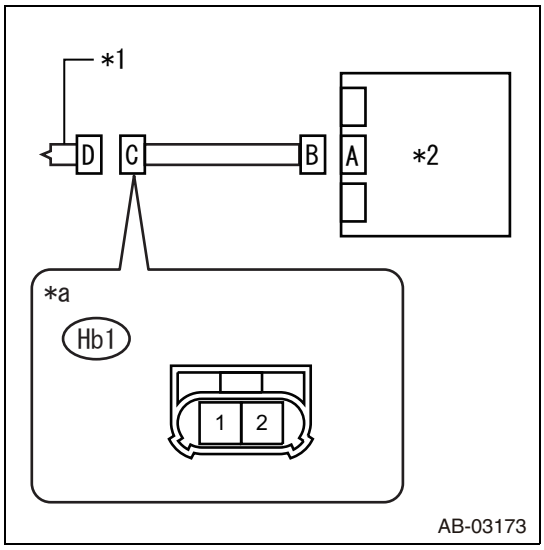

(1) Turn the ignition switch to OFF, disconnect the battery ground terminal, and wait for 60 seconds or more.
(2) Disconnect the connector (Hb1) of the side airbag module LH.
(3) Disconnect the connector (D27, G19, H32) from the airbag control module.
(4) Disconnect the connector (H22) of the seat belt pretensioner LH.
(5) Disconnect the connector (H30) of the curtain airbag module LH.
(6) Using a probe, measure the resistance between the terminals of connector C.
CAUTION:
When measuring the resistance, make sure that the probe is inserted from the back side (harness side) of the connector. Also, do not insert the probe forcibly.

Resistance

Inspection terminals	Inspection conditions	Standard value
(Hb1) No. 1 - chassis ground	Always	1 MΩ or more
(Hb1) No. 2 - chassis ground	Always	1 MΩ or more

Captions in illustration

*1	Side airbag module LH
*2	Airbag control module
*a	Side airbag module connector

NG → Replace the airbag rear harness along with the body harness.

OK

3	Check airbag control module.

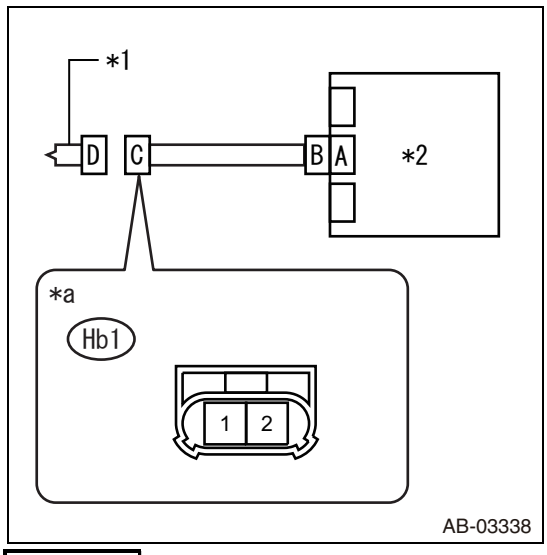

(1) Connect the connector B to the airbag control module.
(2) Connect the connector (H22) of the seat belt pretensioner LH.
(3) Connect the connector (H30) of the curtain airbag module LH.
(4) Using a test harness AT, short-circuit the terminals 1 and 2 of the connector C.
(5) Connect the battery ground terminal and turn the ignition switch to ON.
(6) Perform the reproduction procedure.
(7) Read the DTC. (Current malfunction)
Criteria: DTC B1827 is not displayed.

Captions in illustration

*1	Side airbag module LH
*2	Airbag control module
*a	Side airbag module connector

NG → Replace the airbag control module.

OK

RS

4	Check side airbag module.

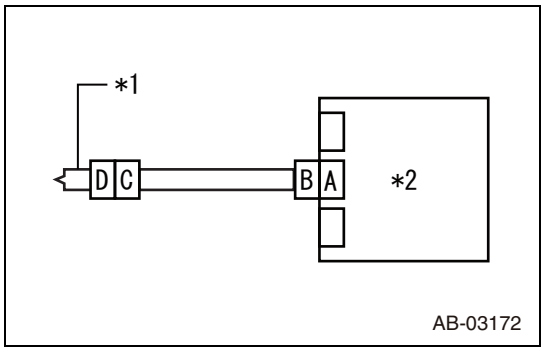

(1) Turn the ignition switch to OFF, disconnect the battery ground terminal, and wait for 60 seconds or more.
(2) Connect the side airbag module connector (Hb1).
(3) Connect the battery ground terminal, and clear the memory.
(4) Perform the reproduction procedure.
(5) Read the DTC. (Current malfunction)
Criteria: DTC B1827 is not displayed.

Captions in illustration

*1	Side airbag module LH
*2	Airbag control module

NG → Replace the side airbag module.

OK

5	Check DTC

Criteria: No other DTC is displayed.

NG → Perform diagnosis for the displayed DTC.

OK

Complete

DTC	B1828	Short in Side Airbag LH (to +B)

Circuit description

DTC No.	DTC detected item	Faulty part
B1828	• Side airbag harness LH is shorted to power supply • Side airbag module LH is faulty. • Airbag control module is faulty.	• Side airbag module LH • Airbag control module • Airbag rear harness

Circuit figure

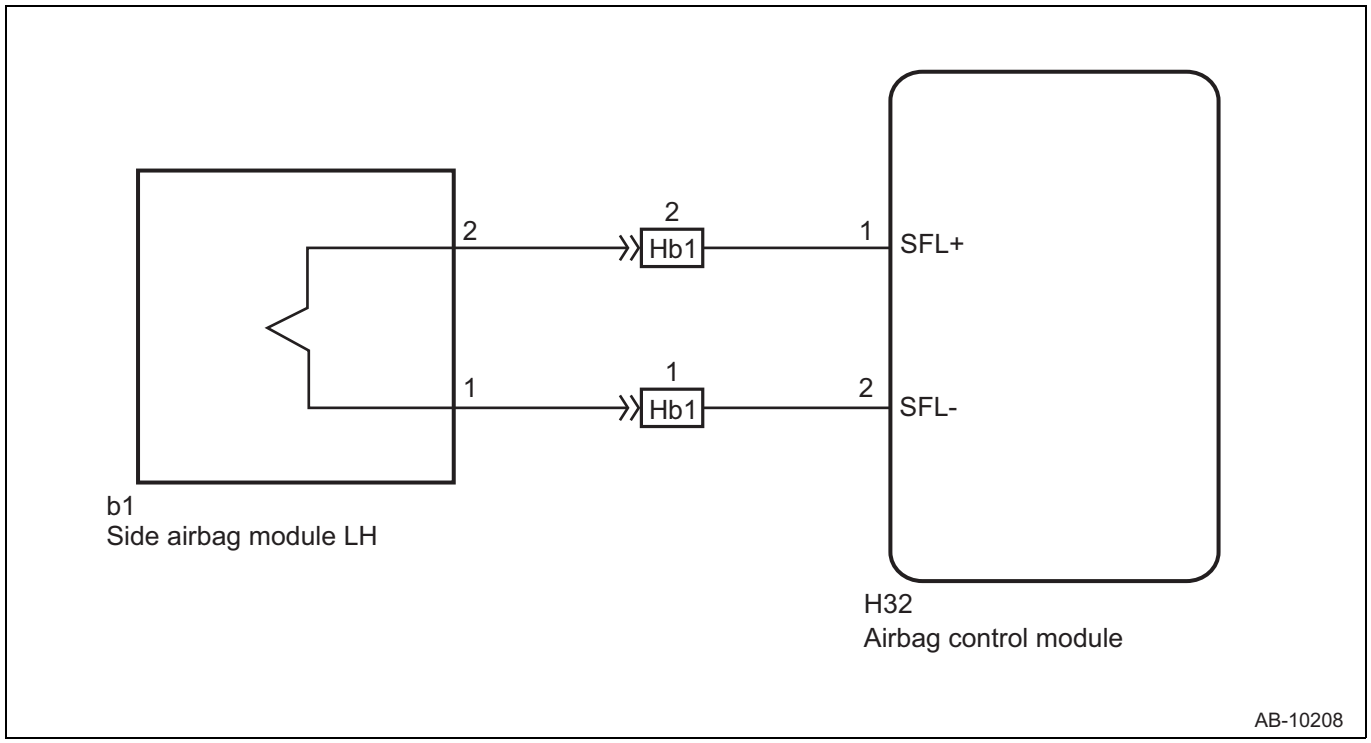

Inspection steps

CAUTION:

Before performing the diagnosis, refer to the precautions.

RS

1	Check poor contact of connectors.

(1) Check for poor contact of the connectors between the airbag control module and the side airbag module.

Criteria: No fault is found.

NG → Replace the airbag rear harness along with the body harness.

OK

2	Check airbag rear harness (side airbag module harness LH).

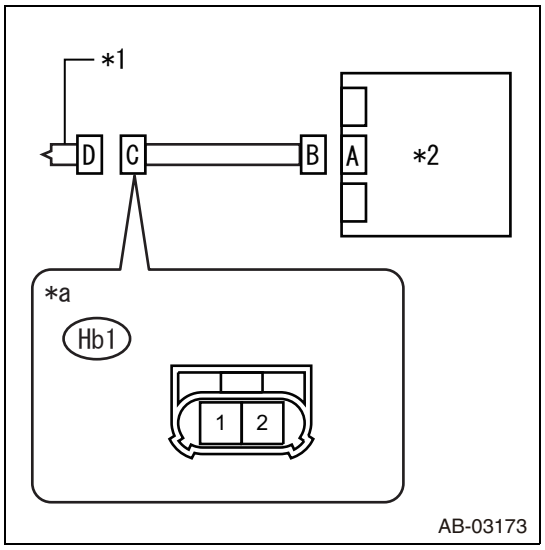

(1) Turn the ignition switch to OFF, disconnect the battery ground terminal, and wait for 60 seconds or more.
(2) Disconnect the connector (Hb1) of the side airbag module LH.
(3) Disconnect the connector (D27, G19, H32) from the airbag control module.
(4) Disconnect the connector (H22) of the seat belt pretensioner LH.
(5) Disconnect the connector (H30) of the curtain airbag module LH.
(6) Using a probe, measure the voltage between the terminals of connector C.
CAUTION:
When measuring the voltage, make sure that the probe is inserted from the back side (harness side) of the connector. Also, do not insert the probe forcibly.

Voltage

Inspection terminals	Inspection conditions	Standard value
(Hb1) No. 1 - chassis ground	IG ON	Less than 1 V
(Hb1) No. 2 - chassis ground	IG ON	Less than 1 V

Captions in illustration

*1	Side airbag module
*2	Airbag control module
*a	Side airbag module connector

NG → Replace the airbag rear harness along with the body harness.

OK

3	Check airbag control module.

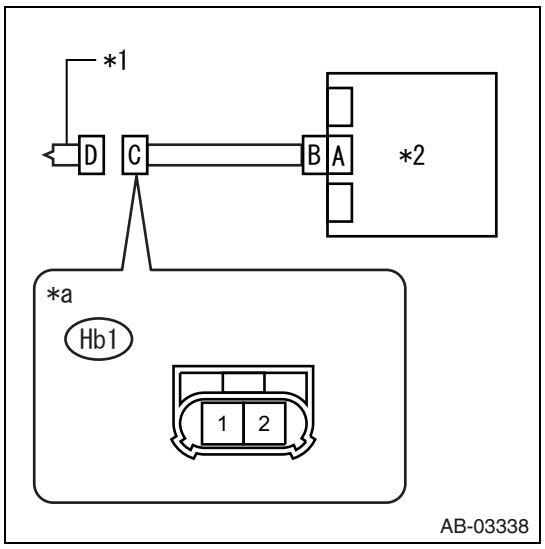

(1) Connect the connector B to the airbag control module.
(2) Connect the connector (H22) of the seat belt pretensioner LH.
(3) Connect the connector (H30) of the curtain airbag module LH.
(4) Using a test harness AT, short-circuit the terminals 1 and 2 of the connector C.
(5) Connect the battery ground terminal and turn the ignition switch to ON.
(6) Perform the reproduction procedure.
(7) Read the DTC. (Current malfunction)
Criteria: DTC B1828 is not displayed.

Captions in illustration

*1	Side airbag module
*2	Airbag control module
*a	Side airbag module connector

NG → Replace the airbag control module.

OK

RS

4	Check side airbag module.

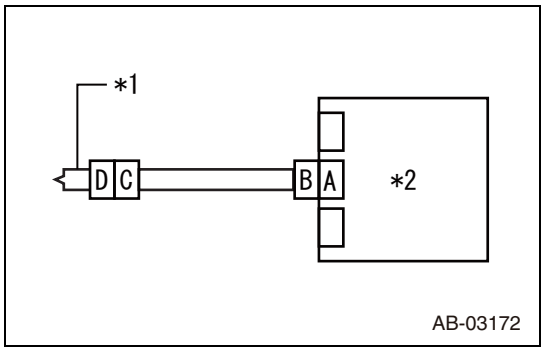

(1) Turn the ignition switch to OFF, disconnect the battery ground terminal, and wait for 60 seconds or more.
(2) Connect the side airbag module connector (Hb1).
(3) Connect the battery ground terminal, and clear the memory.
(4) Perform the reproduction procedure.
(5) Read the DTC. (Current malfunction)
Criteria: DTC B1828 is not displayed.

Captions in illustration

*1	Side airbag module LH
*2	Airbag control module

NG → Replace the side airbag module.

OK

5	Check DTC

Criteria: No other DTC is displayed.

NG → Perform diagnosis for the displayed DTC.

OK

Complete

DTC	B1830	Short in curtain airbag RH squib circuit

Circuit description

DTC No.	DTC detected item	Faulty part
B1830	• Curtain airbag harness RH circuit is shorted. • Curtain airbag module RH is faulty. • Airbag control module is faulty.	• Curtain airbag module RH • Airbag control module • Airbag rear harness

Circuit figure

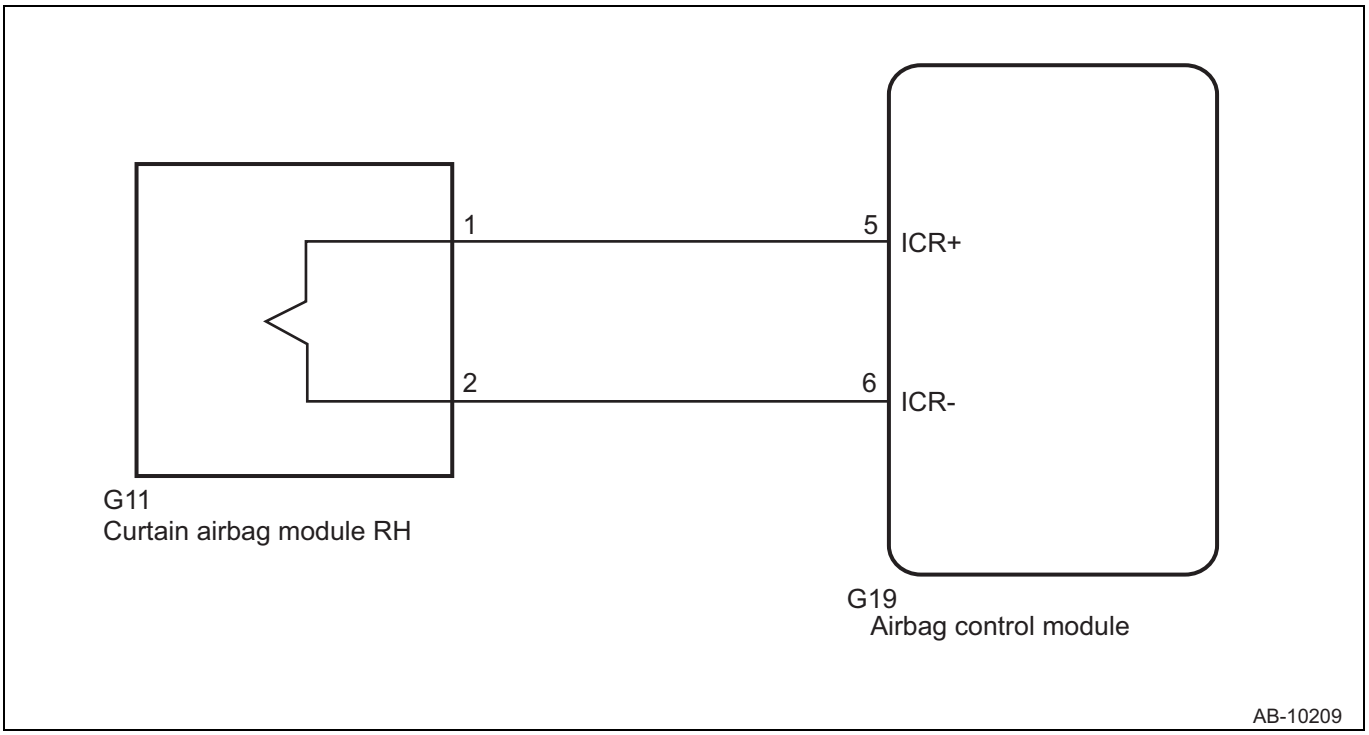

Inspection steps

RS

CAUTION:
Before performing the diagnosis, refer to the precautions.

1	Check poor contact of connectors.

(1) Check for poor contact of the connectors between the airbag control module and the curtain airbag module.
Criteria: No fault is found.

NG → Replace the airbag rear harness along with the body harness.

OK

2	Check curtain airbag module.

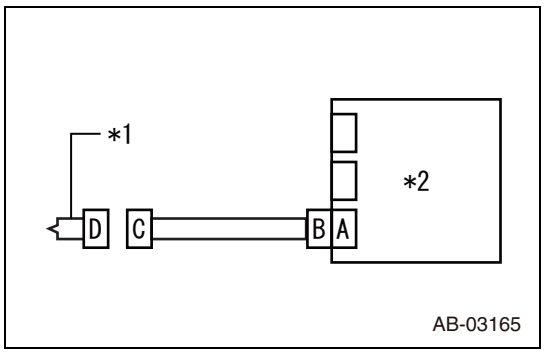

(1) Turn the ignition switch to OFF, disconnect the battery ground terminal, and wait for 60 seconds or more.
(2) Disconnect the connector (G11) from the curtain airbag module RH.
(3) Connect the connector (1N) in the test harness N to the connector C.
(4) Connect the airbag resistor to the connector (2N) in the test harness N.
(5) Connect the battery ground terminal and turn the ignition switch to ON.
Criteria: Airbag warning light remains on even after 6 seconds have passed.

Captions in illustration

*1	Curtain airbag module RH
*2	Airbag control module

NG → Replace the curtain airbag module.

OK

3	Check airbag rear harness (curtain airbag module harness RH).

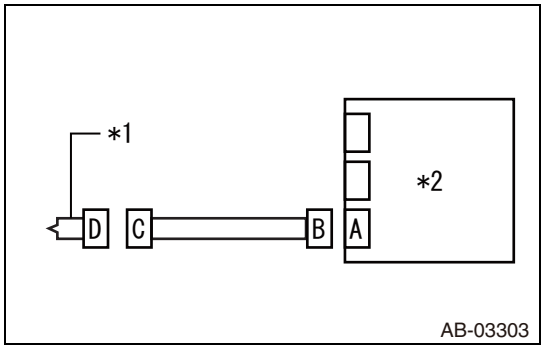

(1) Turn the ignition switch to OFF, disconnect the battery ground terminal, and wait for 60 seconds or more.
(2) Disconnect the connector (G17) from the seat belt pretensioner RH.
(3) Disconnect the connector (Gc1) from the side airbag module RH.
(4) Disconnect the airbag resistor from the connector (2N) in the test harness N.
(5) Disconnect the connector (D27, G19, H32) from the airbag control module, and connect the connector (1AG) in the test harness AG.
(6) Measure the resistance between the terminals.

Resistance

Inspection terminals	Inspection conditions	Standard value
(6AG) No. 6 - (6AG) No. 8	Always	1 MΩ or more

Captions in illustration

*1	Curtain airbag module RH
*2	Airbag control module

NG → Replace the airbag rear harness along with the body harness.

OK

4	Check DTC

(1) Connect all connectors.
(2) Clear the memory.
(3) Perform the reproduction procedure.
(4) Read the DTC. (Current malfunction)
Criteria: DTC B1830 is not displayed.

NG → Replace the airbag control module.

OK

5	Check DTC

Criteria: No other DTC is displayed.

NG → Perform diagnosis for the displayed DTC.

OK

Complete

RS

DTC	B1831	Open in curtain airbag RH squib circuit

Circuit description

DTC No.	DTC detected item	Faulty part
B1831	• Curtain airbag harness RH circuit is open. • Curtain airbag module RH is faulty. • Airbag control module is faulty.	• Curtain airbag module RH • Airbag control module • Airbag rear harness

Circuit figure

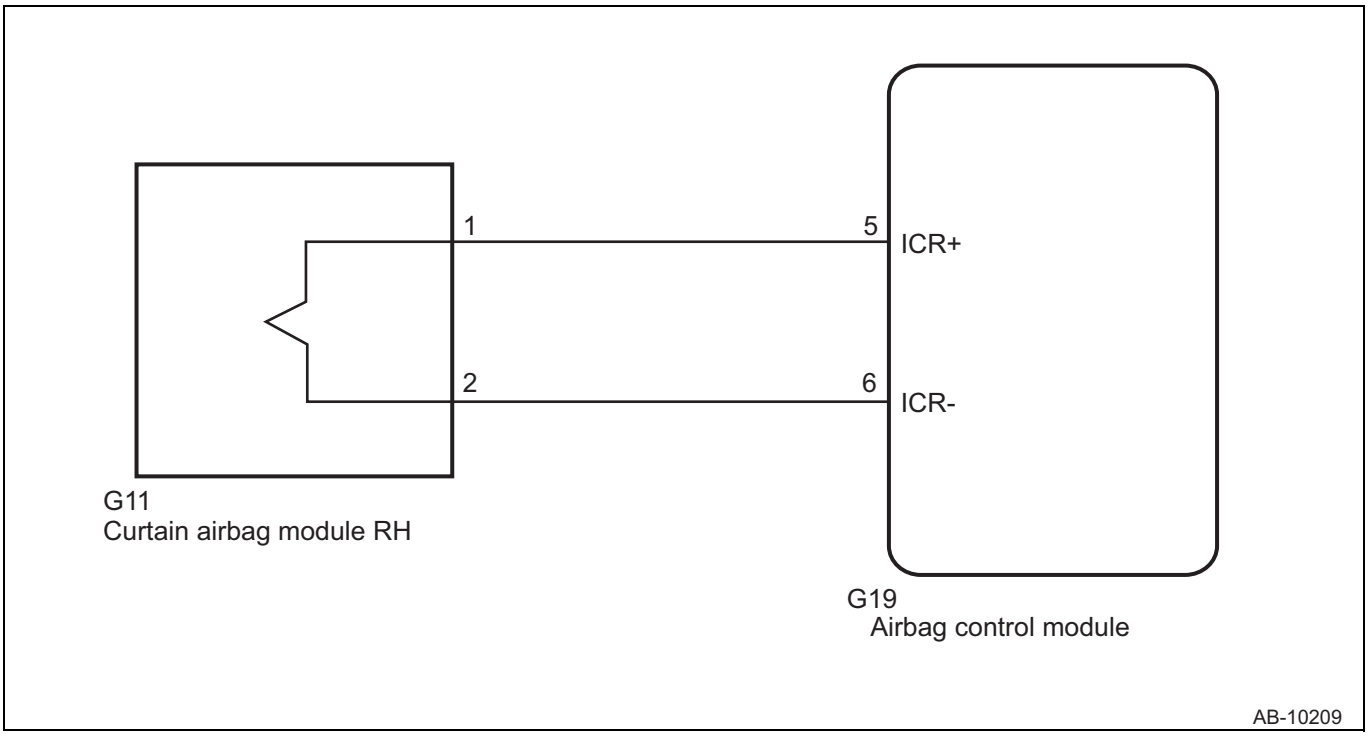

Inspection steps

CAUTION:

Before performing the diagnosis, refer to the precautions.

1	Check poor contact of connectors.

(1) Check for poor contact of the connectors between the airbag control module and the curtain airbag module.

Criteria: No fault is found.

NG → Replace the airbag rear harness along with the body harness.

OK

2	Check curtain airbag module.

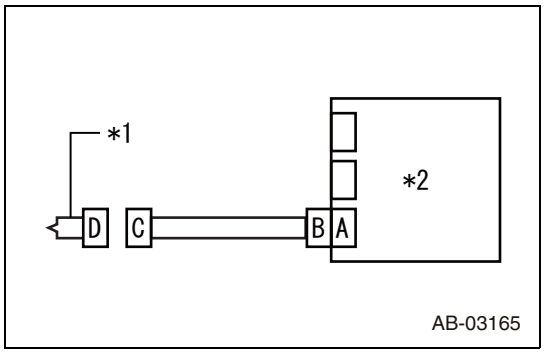

(1) Turn the ignition switch to OFF, disconnect the battery ground terminal, and wait for 60 seconds or more.
(2) Disconnect the connector (G11) from the curtain airbag module RH.
(3) Connect the connector (1N) in the test harness N to the connector C.
(4) Connect the airbag resistor to the connector (2N) in the test harness N.
(5) Connect the battery ground terminal and turn the ignition switch to ON.
Criteria: Airbag warning light remains on even after 6 seconds have passed.

Captions in illustration

*1	Curtain airbag module RH
*2	Airbag control module

NG → Replace the curtain airbag module.

OK

3	Check airbag rear harness (curtain airbag module harness RH).

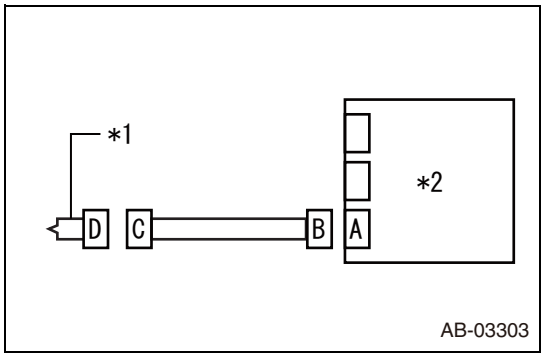

(1) Turn the ignition switch to OFF, disconnect the battery ground terminal, and wait for 60 seconds or more.
(2) Disconnect the connector (G17) from the seat belt pretensioner RH.
(3) Disconnect the connector (Gc1) from the side airbag module RH.
(4) Disconnect the airbag resistor from the connector (2N) in the test harness N.
(5) Disconnect the connector (D27, G19, H32) from the airbag control module, and connect the connector (1AG) in the test harness AG.
(6) Measure the resistance between the terminals.

Resistance

Inspection terminals	Inspection conditions	Standard value
(6AG) No. 8 - (2N) No. 2	Always	Less than 10 Ω
(6AG) No. 6 - (2N) No. 1	Always	Less than 10 Ω

Captions in illustration

*1	Curtain airbag module RH
*2	Airbag control module

NG → Replace the airbag rear harness along with the body harness.

OK

4	Check DTC

(1) Connect all connectors.
(2) Clear the memory.
(3) Perform the reproduction procedure.
(4) Read the DTC. (Current malfunction)
Criteria: DTC B1831 is not displayed.

RS

NG → Replace the airbag control module.

OK

5	Check DTC

Criteria: No other DTC is displayed.

NG → Perform diagnosis for the displayed DTC.

OK

Complete

DTC	B1832	Short in curtain airbag RH squib circuit (to ground)

Circuit description

DTC No.	DTC detected item	Faulty part
B1832	• Curtain airbag harness RH circuit is shorted to ground. • Curtain airbag module RH is faulty. • Airbag control module is faulty.	• Curtain airbag module RH • Airbag control module • Airbag rear harness

RS

Circuit figure

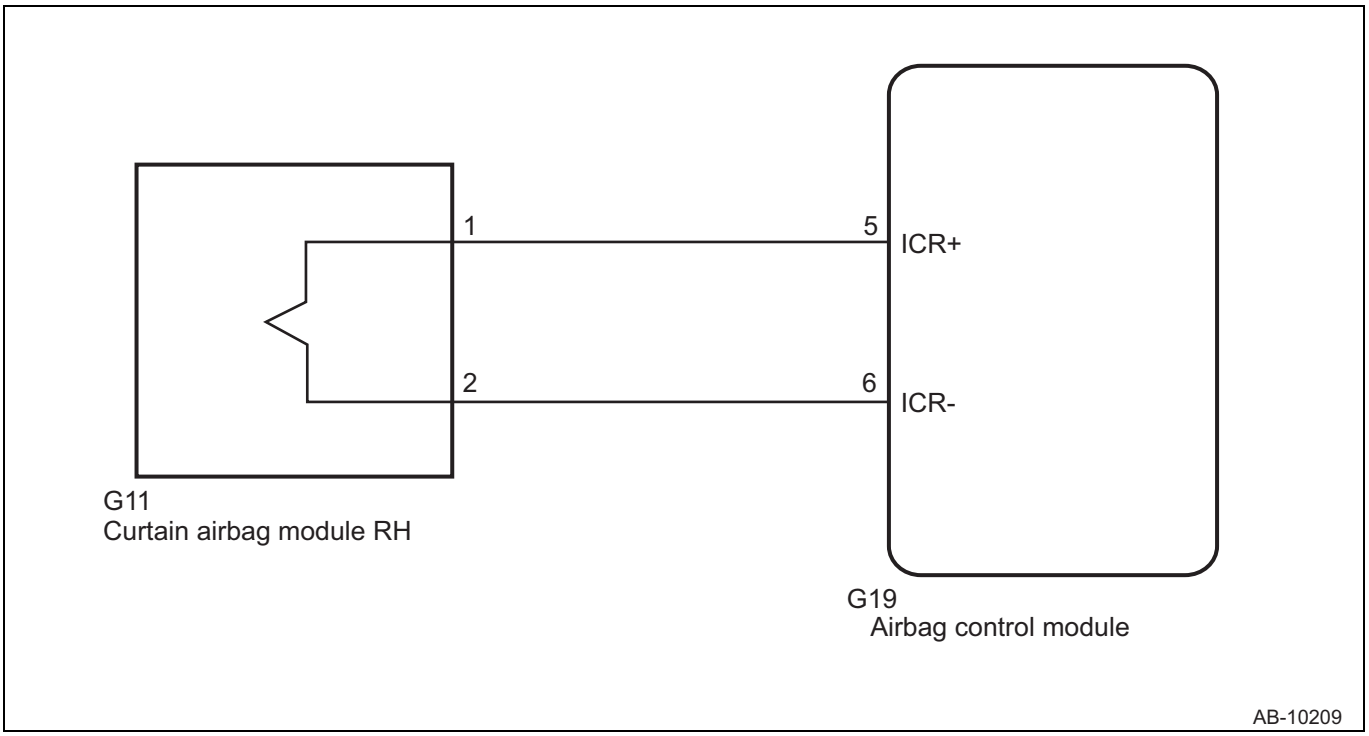

Inspection steps

CAUTION:

Before performing the diagnosis, refer to the precautions.

1	Check poor contact of connectors.

(1) Check for poor contact of the connectors between the airbag control module and the curtain airbag module.
Criteria: No fault is found.

NG → Replace the airbag rear harness along with the body harness.

OK

2	Check curtain airbag module.

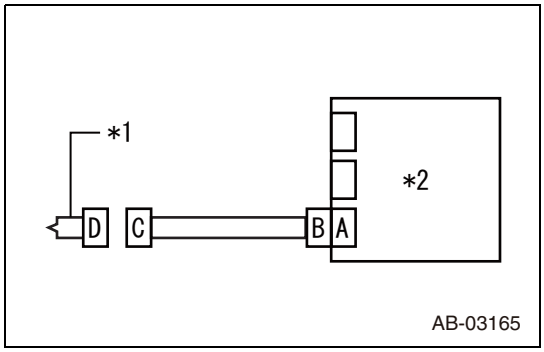

(1) Turn the ignition switch to OFF, disconnect the battery ground terminal, and wait for 60 seconds or more.
(2) Disconnect the connector (G11) from the curtain airbag module RH.
(3) Connect the connector (1N) in the test harness N to the connector C.
(4) Connect the airbag resistor to the connector (2N) in the test harness N.
(5) Connect the battery ground terminal and turn the ignition switch to ON.
Criteria: Airbag warning light remains on even after 6 seconds have passed.

Captions in illustration

*1	Curtain airbag module RH
*2	Airbag control module

NG → Replace the curtain airbag module.

OK

3	Check airbag rear harness (curtain airbag module harness RH).

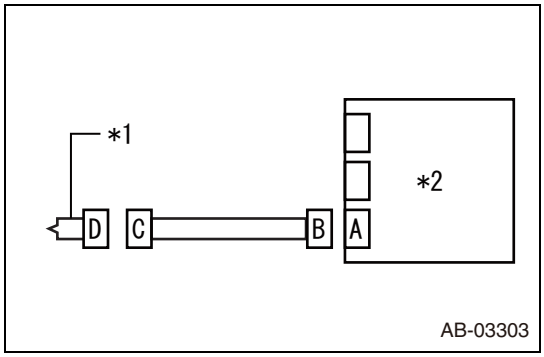

(1) Turn the ignition switch to OFF, disconnect the battery ground terminal, and wait for 60 seconds or more.
(2) Disconnect the connector (G17) from the seat belt pretensioner RH.
(3) Disconnect the connector (Gc1) from the side airbag module RH.
(4) Disconnect the airbag resistor from the connector (2N) in the test harness N.
(5) Disconnect the connector (D27, G19, H32) from the airbag control module, and connect the connector (1AG) in the test harness AG.
(6) Measure the resistance between the terminals.

Resistance

Inspection terminals	Inspection conditions	Standard value
(6AG) No. 8 - chassis ground	Always	1 MΩ or more
(6AG) No. 6 - chassis ground	Always	1 MΩ or more

Captions in illustration

*1	Curtain airbag module RH
*2	Airbag control module

NG → Replace the airbag rear harness along with the body harness.

RS

OK

4	Check DTC

(1) Connect all connectors.
(2) Clear the memory.
(3) Perform the reproduction procedure.
(4) Read the DTC. (Current malfunction)
Criteria: DTC B1832 is not displayed.

NG → Replace the airbag control module.

OK

5	Check DTC

Criteria: No other DTC is displayed.

NG → Perform diagnosis for the displayed DTC.

OK

Complete

RS

DTC	B1833	Short in curtain airbag RH squib circuit (to +B)

Circuit description

DTC No.	DTC detected item	Faulty part
B1833	• Curtain airbag harness RH is shorted to power supply • Curtain airbag module RH is faulty. • Airbag control module is faulty.	• Curtain airbag module RH • Airbag control module • Airbag rear harness

Circuit figure

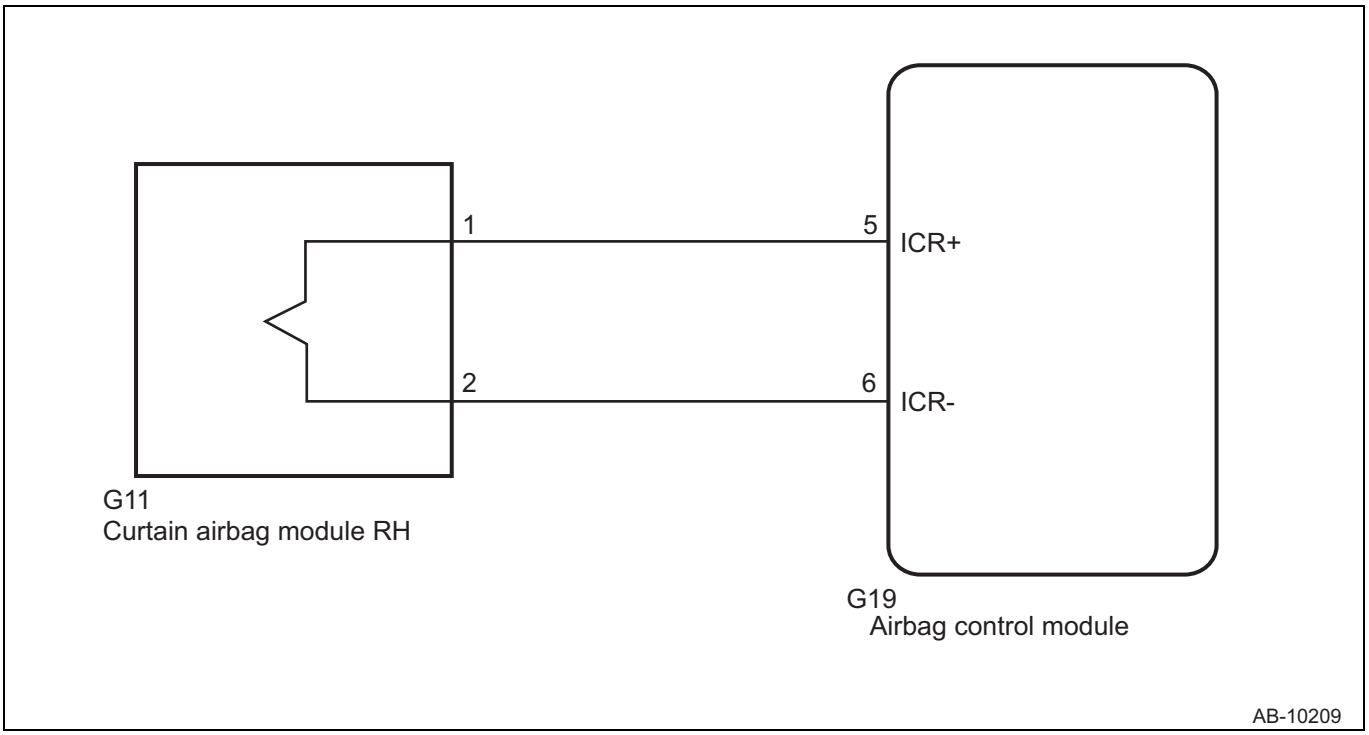

Inspection steps

CAUTION:

Before performing the diagnosis, refer to the precautions.

RS

1	Check poor contact of connectors.

(1) Check for poor contact of the connectors between the airbag control module and the curtain airbag module.

Criteria: No fault is found.

NG → Replace the airbag rear harness along with the body harness.

OK

2	Check curtain airbag module.

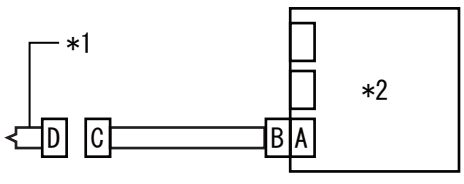

(1) Turn the ignition switch to OFF, disconnect the battery ground terminal, and wait for 60 seconds or more.
(2) Disconnect the connector (G11) from the curtain airbag module RH.
(3) Connect the connector (1N) in the test harness N to the connector C.
(4) Connect the airbag resistor to the connector (2N) in the test harness N.
(5) Connect the battery ground terminal and turn the ignition switch to ON.

Criteria: Airbag warning light remains on even after 6 seconds have passed.

Captions in illustration

*1	Curtain airbag module RH
*2	Airbag control module

NG → Replace the curtain airbag module.

OK

3	Check airbag rear harness (curtain airbag module harness RH).

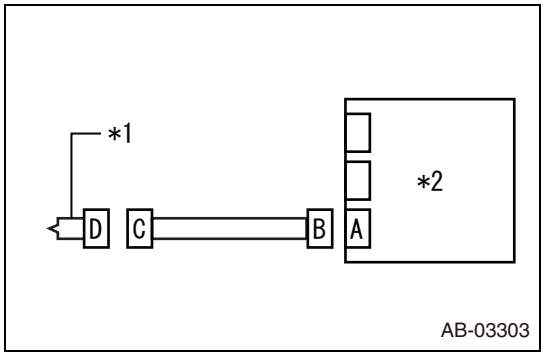

(1) Turn the ignition switch to OFF, disconnect the battery ground terminal, and wait for 60 seconds or more.
(2) Disconnect the connector (G17) from the seat belt pretensioner RH.
(3) Disconnect the connector (Gc1) from the side airbag module RH.
(4) Disconnect the airbag resistor from the connector (2N) in the test harness N.
(5) Disconnect the connector (D27, G19, H32) from the airbag control module, and connect the connector (1AG) in the test harness AG.
(6) Measure the voltage between terminals.

Voltage

Inspection terminals	Inspection conditions	Standard value
(6AG) No. 8 - chassis ground	IG ON	Less than 1 V
(6AG) No. 6 - chassis ground	IG ON	Less than 1 V

Captions in illustration

*1	Curtain airbag module RH
*2	Airbag control module

NG → Replace the airbag rear harness along with the body harness.

RS

OK

4	Check DTC

(1) Connect all connectors.
(2) Clear the memory.
(3) Perform the reproduction procedure.
(4) Read the DTC. (Current malfunction)
Criteria: DTC B1833 is not displayed.

NG → Replace the airbag control module.

OK

5	Check DTC

Criteria: No other DTC is displayed.

NG → Perform diagnosis for the displayed DTC.

OK

Complete

DTC	B1835	Short in curtain airbag LH squib circuit

Circuit description

DTC No.	DTC detected item	Faulty part
B1835	• Curtain airbag harness LH circuit is shorted • Curtain airbag module LH is faulty. • Airbag control module is faulty.	• Curtain airbag module LH • Airbag control module • Airbag rear harness

Circuit figure

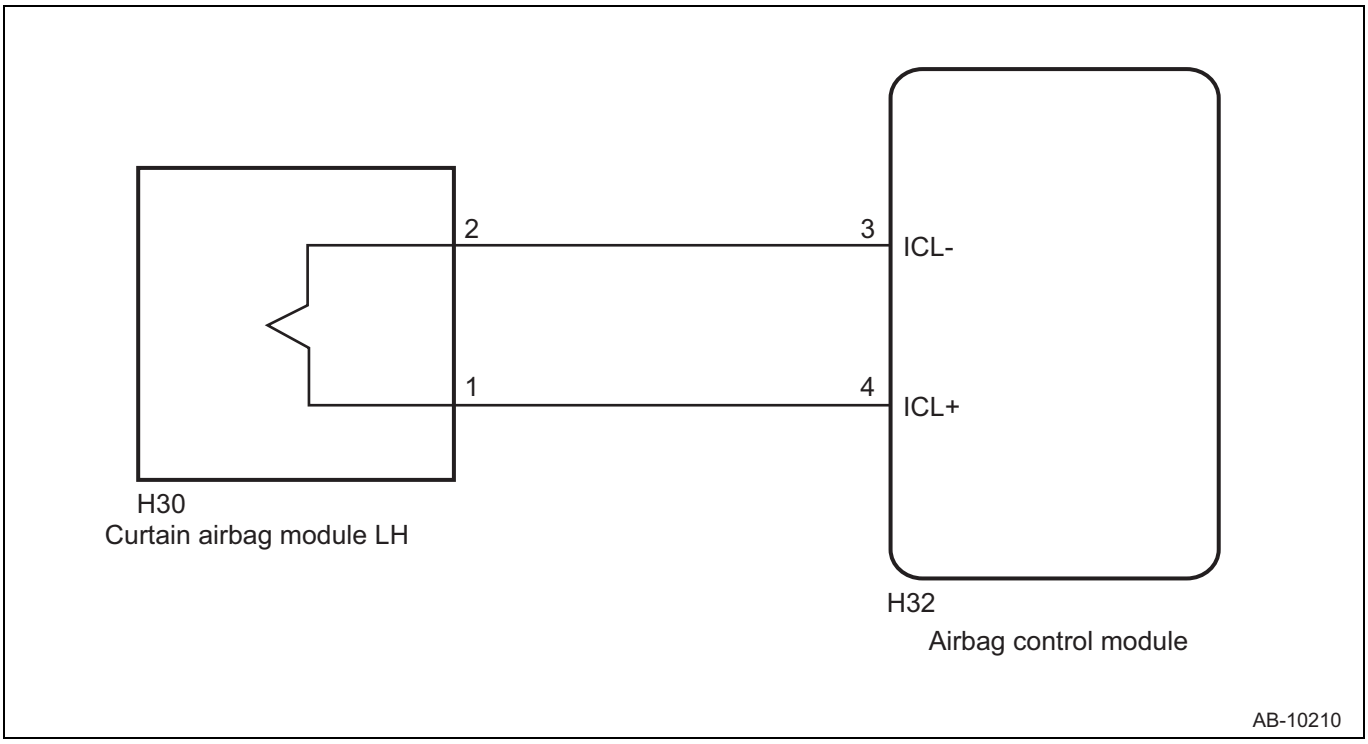

Inspection steps

CAUTION:

Before performing the diagnosis, refer to the precautions.

1	Check poor contact of connectors.

(1) Check for poor contact of the connectors between the airbag control module and the curtain airbag module.

Criteria: No fault is found.

NG → Replace the airbag rear harness along with the body harness.

OK

2	Check curtain airbag module.

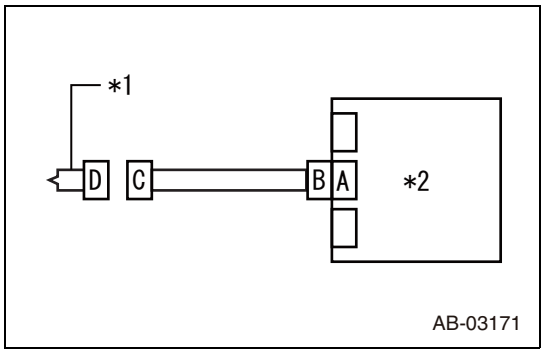

(1) Turn the ignition switch to OFF, disconnect the battery ground terminal, and wait for 60 seconds or more.
(2) Disconnect the connector (H30) from the curtain airbag module LH.
(3) Connect the connector (1N) in the test harness N to the connector C.
(4) Connect the airbag resistor to the connector (2N) in the test harness N.
(5) Connect the battery ground terminal and turn the ignition switch to ON.
Criteria: Airbag warning light remains on even after 6 seconds have passed.

Captions in illustration

*1	Curtain airbag module LH
*2	Airbag control module

NG → Replace the curtain airbag module.

OK

3	Check airbag rear harness (curtain airbag module harness LH).

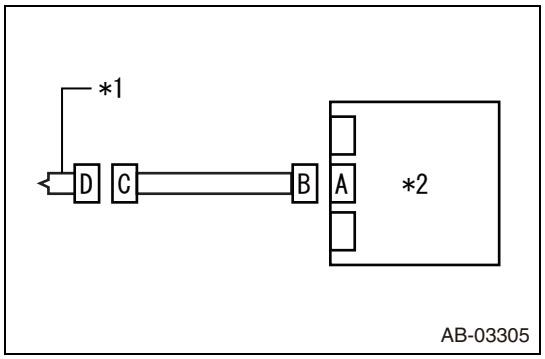

(1) Turn the ignition switch to OFF, disconnect the battery ground terminal, and wait for 60 seconds or more.
(2) Disconnect the connector (H22) from the seat belt pretensioner LH.
(3) Disconnect the connector (Hb1) from the side airbag module LH.
(4) Disconnect the airbag resistor from the connector (2N) in the test harness N.
(5) Disconnect the connector (D27, G19, H32) from the airbag control module, and connect the connector (1AG) in the test harness AG.
(6) Measure the resistance between the terminals.

Resistance

Inspection terminals	Inspection conditions	Standard value
(6AG) No. 1 - (6AG) No. 3	Always	1 MΩ or more

Captions in illustration

*1	Curtain airbag module LH
*2	Airbag control module

NG → Replace the airbag rear harness along with the body harness.

OK

4	Check DTC

(1) Connect all connectors.
(2) Clear the memory.
(3) Perform the reproduction procedure.
(4) Read the DTC. (Current malfunction)
Criteria: DTC B1835 is not displayed.

NG → Replace the airbag control module.

RS

OK

5	Check DTC

Criteria: No other DTC is displayed.

NG → Perform diagnosis for the displayed DTC.

OK

Complete

DTC	B1836	Open in curtain airbag LH squib circuit

Circuit description

DTC No.	DTC detected item	Faulty part
B1836	• Curtain airbag harness LH circuit is open • Curtain airbag module LH is faulty. • Airbag control module is faulty.	• Curtain airbag module LH • Airbag control module • Airbag rear harness

Circuit figure

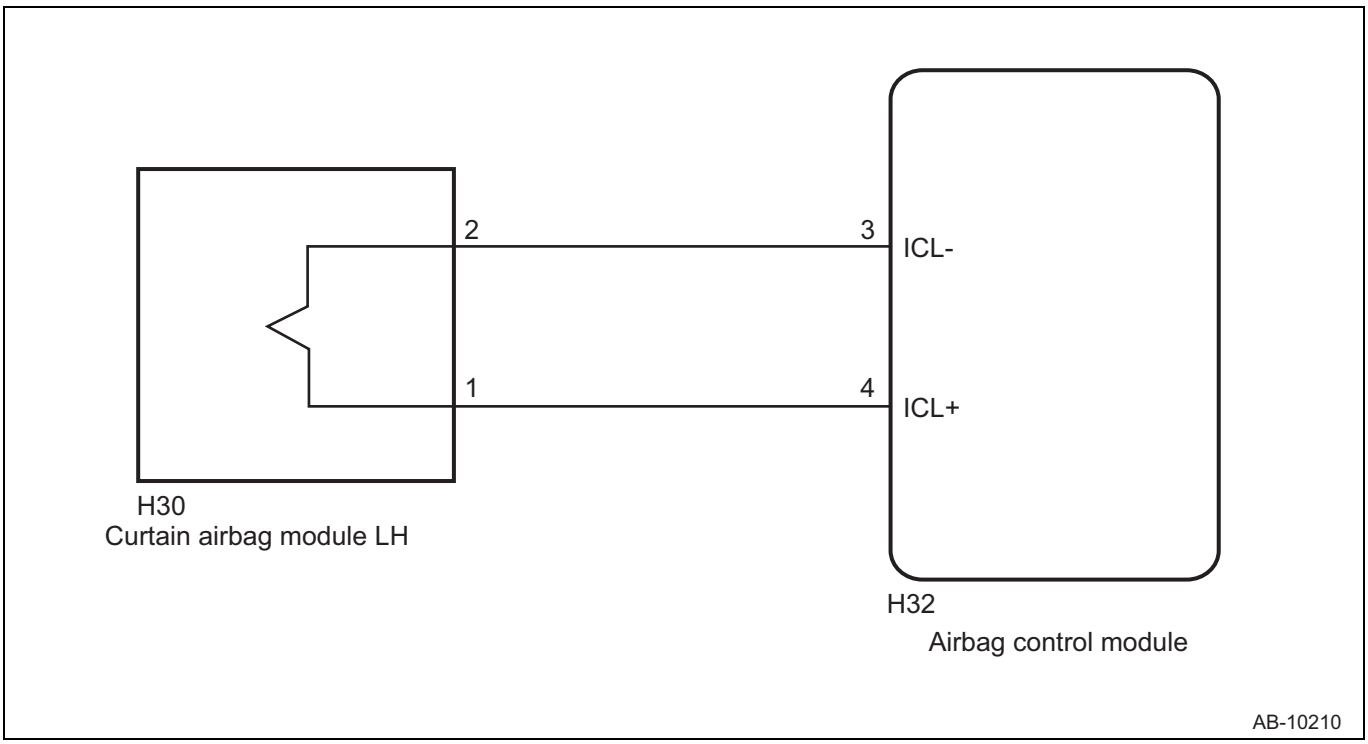

RS

Inspection steps

CAUTION:

Before performing the diagnosis, refer to the precautions.

1	Check poor contact of connectors.

(1) Check for poor contact of the connectors between the airbag control module and the curtain airbag module.

Criteria: No fault is found.

NG → Replace the airbag rear harness along with the body harness.

OK

2	Check curtain airbag module.

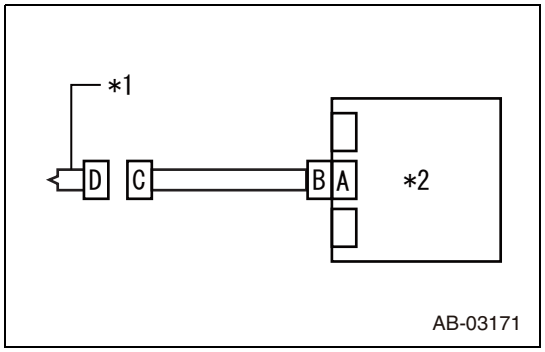

(1) Turn the ignition switch to OFF, disconnect the battery ground terminal, and wait for 60 seconds or more.
(2) Disconnect the connector (H30) from the curtain airbag module LH.
(3) Connect the connector (1N) in the test harness N to the connector C.
(4) Connect the airbag resistor to the connector (2N) in the test harness N.
(5) Connect the battery ground terminal and turn the ignition switch to ON.
Criteria: Airbag warning light remains on even after 6 seconds have passed.

Captions in illustration

*1	Curtain airbag module LH
*2	Airbag control module

NG → Replace the curtain airbag module.

OK

RS

3	Check airbag rear harness (curtain airbag module harness LH).

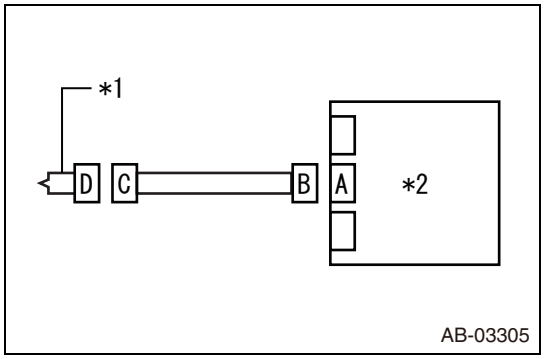

(1) Turn the ignition switch to OFF, disconnect the battery ground terminal, and wait for 60 seconds or more.
(2) Disconnect the connector (H22) from the seat belt pretensioner LH.
(3) Disconnect the connector (Hb1) from the side airbag module LH.
(4) Disconnect the airbag resistor from the connector (2N) in the test harness N.
(5) Disconnect the connector (D27, G19, H32) from the airbag control module, and connect the connector (1AG) in the test harness AG.
(6) Measure the resistance between the terminals.

Resistance

Inspection terminals	Inspection conditions	Standard value
(6AG) No. 1 - (2N) No. 2	Always	Less than 10 Ω
(6AG) No. 3 - (2N) No. 1	Always	Less than 10 Ω

Captions in illustration

*1	Curtain airbag module LH
*2	Airbag control module

NG → Replace the airbag rear harness along with the body harness.

OK

4	Check DTC

(1) Connect all connectors.

(2) Clear the memory.
(3) Perform the reproduction procedure.
(4) Read the DTC. (Current malfunction)
Criteria: DTC B1836 is not displayed.

NG → Replace the airbag control module.

OK

5	Check DTC

Criteria: No other DTC is displayed.

NG → Perform diagnosis for the displayed DTC.

OK

Complete

DTC	B1837	Short in curtain airbag LH squib circuit (to ground)

Circuit description

DTC No.	DTC detected item	Faulty part
B1837	• Curtain airbag harness LH circuit is shorted to ground • Curtain airbag module LH is faulty. • Airbag control module is faulty.	• Curtain airbag module LH • Airbag control module • Airbag rear harness

RS

Circuit figure

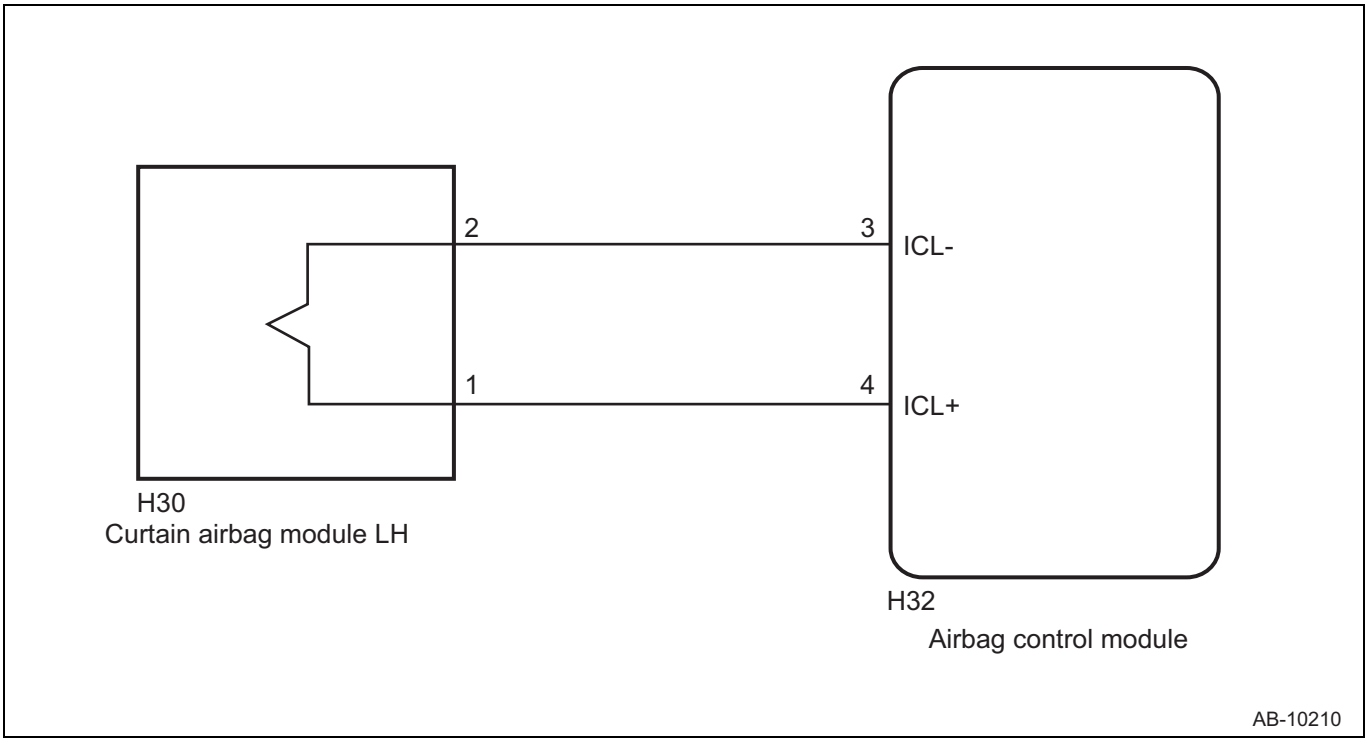

Inspection steps
CAUTION:
Before performing the diagnosis, refer to the precautions.

1	Check poor contact of connectors.

(1) Check for poor contact of the connectors between the airbag control module and the curtain airbag module.
Criteria: No fault is found.

NG → Replace the airbag rear harness along with the body harness.

OK

2	Check curtain airbag module.

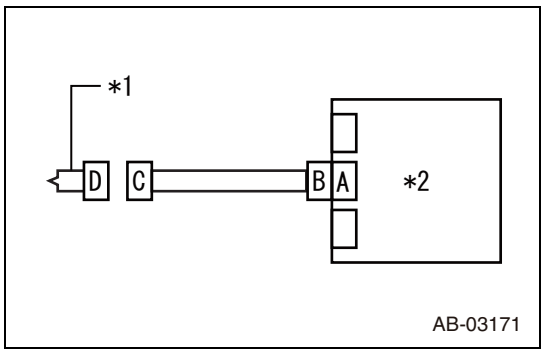

(1) Turn the ignition switch to OFF, disconnect the battery ground terminal, and wait for 60 seconds or more.
(2) Disconnect the connector (H30) from the curtain airbag module LH.
(3) Connect the connector (1N) in the test harness N to the connector C.
(4) Connect the airbag resistor to the connector (2N) in the test harness N.
(5) Connect the battery ground terminal and turn the ignition switch to ON.
Criteria: Airbag warning light remains on even after 6 seconds have passed.

Captions in illustration

*1	Curtain airbag module LH
*2	Airbag control module

NG → Replace the curtain airbag module.

OK

3	Check airbag rear harness (curtain airbag module harness LH).

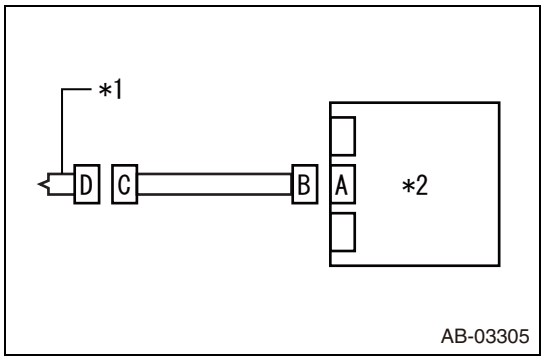

(1) Turn the ignition switch to OFF, disconnect the battery ground terminal, and wait for 60 seconds or more.
(2) Disconnect the connector (H22) from the seat belt pretensioner LH.
(3) Disconnect the connector (Hb1) from the side airbag module LH.
(4) Disconnect the airbag resistor from the connector (2N) in the test harness N.
(5) Disconnect the connector (D27, G19, H32) from the airbag control module, and connect the connector (1AG) in the test harness AG.
(6) Measure the resistance between the terminals.

Resistance

Inspection terminals	Inspection conditions	Standard value
(6AG) No. 1 - chassis ground	Always	1 MΩ or more
(6AG) No. 3 - chassis ground	Always	1 MΩ or more

Captions in illustration

*1	Curtain airbag module LH
*2	Airbag control module

RS

NG → Replace the airbag rear harness along with the body harness.

OK

4	Check DTC

(1) Connect all connectors.
(2) Clear the memory.
(3) Perform the reproduction procedure.
(4) Read the DTC. (Current malfunction)
Criteria: DTC B1837 is not displayed.

NG → Replace the airbag control module.

OK

5	Check DTC

Criteria: No other DTC is displayed.

NG → Perform diagnosis for the displayed DTC.

OK

Complete

DTC	B1838	Short in curtain airbag LH squib circuit (to +B)

Circuit description

DTC No.	DTC detected item	Faulty part
B1838	• Curtain airbag harness LH is shorted to power supply • Curtain airbag module LH is faulty. • Airbag control module is faulty.	• Curtain airbag module LH • Airbag control module • Airbag rear harness

Circuit figure

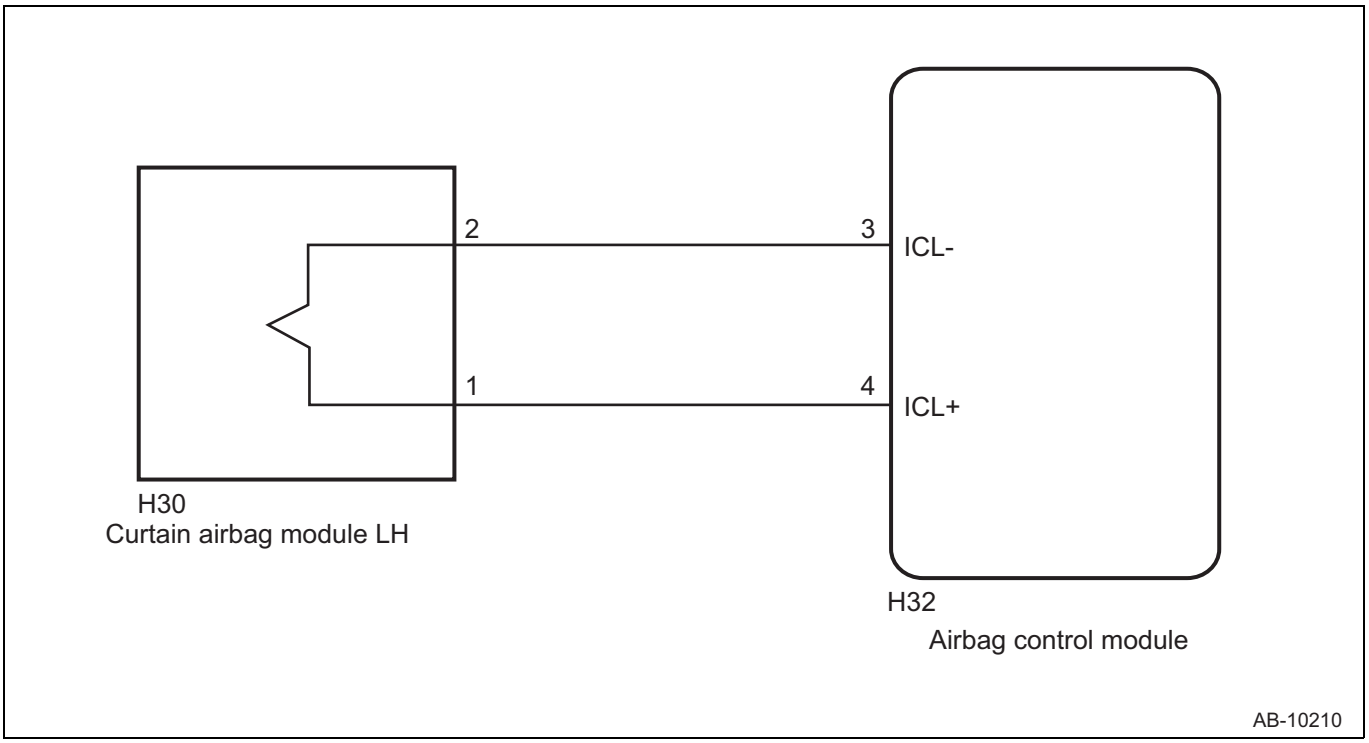

Inspection steps

RS

CAUTION:
Before performing the diagnosis, refer to the precautions.

1	Check poor contact of connectors.

(1) Check for poor contact of the connectors between the airbag control module and the curtain airbag module.
Criteria: No fault is found.

NG → Replace the airbag rear harness along with the body harness.

OK

2	Check curtain airbag module.

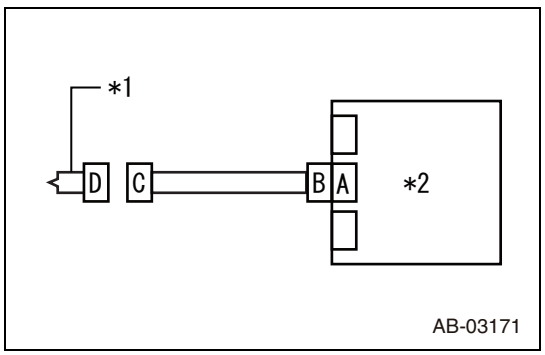

(1) Turn the ignition switch to OFF, disconnect the battery ground terminal, and wait for 60 seconds or more.
(2) Disconnect the connector (H30) from the curtain airbag module LH.
(3) Connect the connector (1N) in the test harness N to the connector C.
(4) Connect the airbag resistor to the connector (2N) in the test harness N.
(5) Connect the battery ground terminal and turn the ignition switch to ON.
Criteria: Airbag warning light remains on even after 6 seconds have passed.

Captions in illustration

*1	Curtain airbag module LH
*2	Airbag control module

NG → Replace the curtain airbag module.

OK

3	Check airbag rear harness (curtain airbag module harness LH).

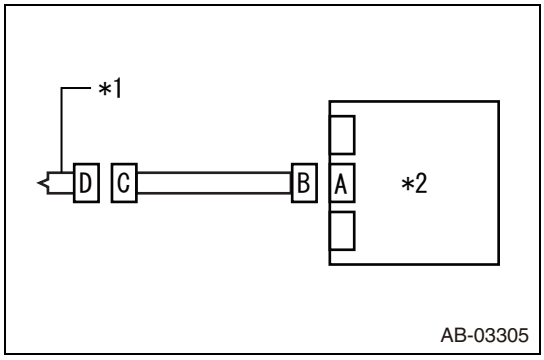

(1) Turn the ignition switch to OFF, disconnect the battery ground terminal, and wait for 60 seconds or more.
(2) Disconnect the connector (H22) from the seat belt pretensioner LH.
(3) Disconnect the connector (Hb1) from the side airbag module LH.
(4) Disconnect the airbag resistor from the connector (2N) in the test harness N.
(5) Disconnect the connector (D27, G19, H32) from the airbag control module, and connect the connector (1AG) in the test harness AG.
(6) Measure the voltage between terminals.

Voltage

Inspection terminals	Inspection conditions	Standard value
(6AG) No. 1 (+) - chassis ground (-)	IG ON	Less than 1 V
(6AG) No. 3 (+) - chassis ground (-)	IG ON	Less than 1 V

Captions in illustration

*1	Curtain airbag module LH
*2	Airbag control module

NG → Replace the airbag rear harness along with the body harness.

OK

4	Check DTC

(1) Connect all connectors.
(2) Clear the memory.
(3) Perform the reproduction procedure.
(4) Read the DTC. (Current malfunction)
Criteria: DTC B1838 is not displayed.

NG → Replace the airbag control module.

OK

5	Check DTC

Criteria: No other DTC is displayed.

NG → Perform diagnosis for the displayed DTC.

OK

Complete

RS

DTC	B1900	Short in front P/T RH

Circuit description

DTC No.	DTC detected item	Faulty part
B1900	• Seat belt pretensioner RH circuit is shorted. • Seat belt pretensioner RH is faulty. • Pretensioner harness RH is faulty. • Airbag control module is faulty.	• Seat belt pretensioner RH • Airbag control module • Airbag rear harness

Circuit figure

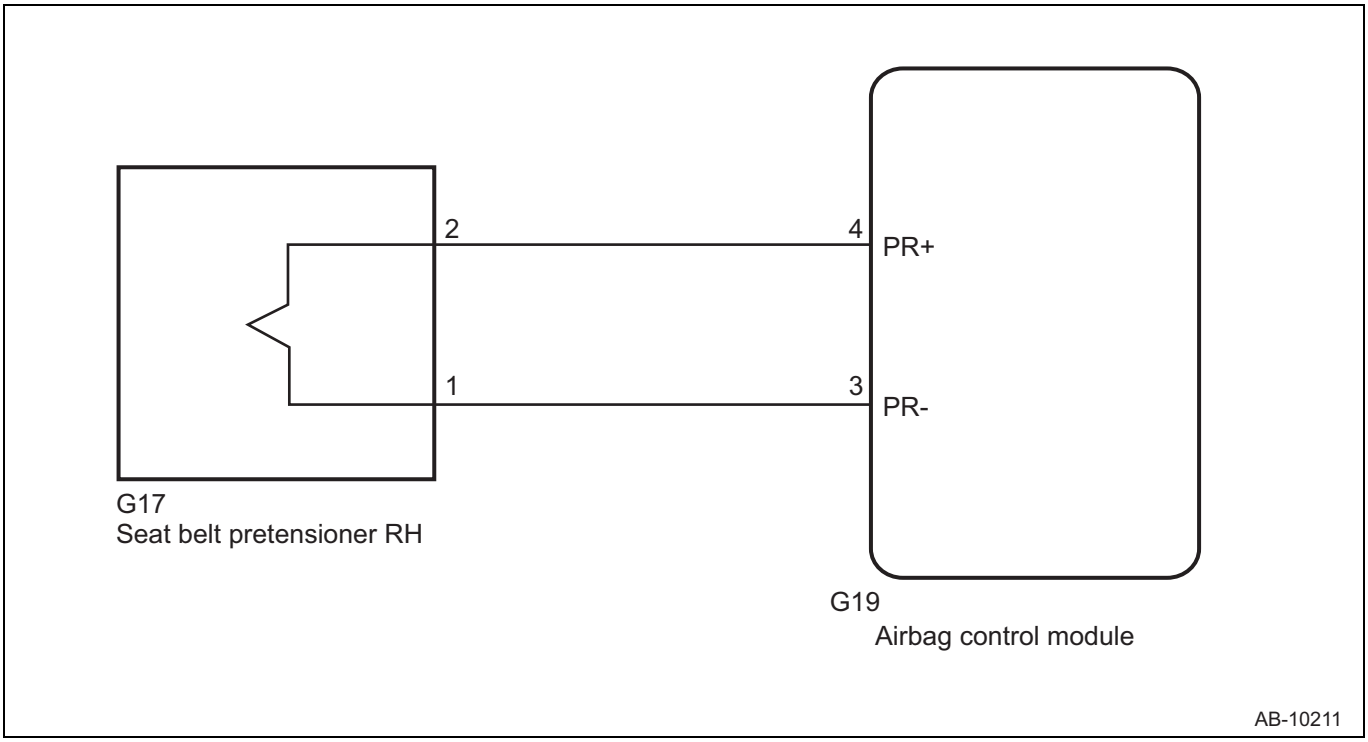

RS

Inspection steps

CAUTION:

Before performing the diagnosis, refer to the precautions.

1	Check poor contact of connectors.

(1) Check for poor contact of the connectors between the airbag control module and the seat belt pretensioner.

Criteria: No fault is found.

NG → Replace the airbag rear harness along with the body harness.

OK

2	Check seat belt pretensioner.

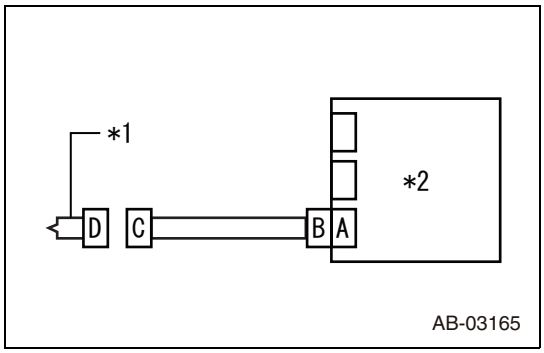

(1) Turn the ignition switch to OFF, disconnect the battery ground terminal, and wait for 60 seconds or more.
(2) Disconnect the connector (G17) from the seat belt pretensioner RH.
(3) Connect the connector (1N) in the test harness N to the connector C.
(4) Connect the airbag resistor to the connector (2N) in the test harness N.
(5) Connect the battery ground terminal and turn the ignition switch to ON.
Criteria: Airbag warning light remains on even after 6 seconds have passed.

Captions in illustration

*1	Seat belt pretensioner
*2	Airbag control module

NG → Replace the seat belt pretensioner.

OK

3	Check airbag rear harness (seat belt pretensioner harness RH).

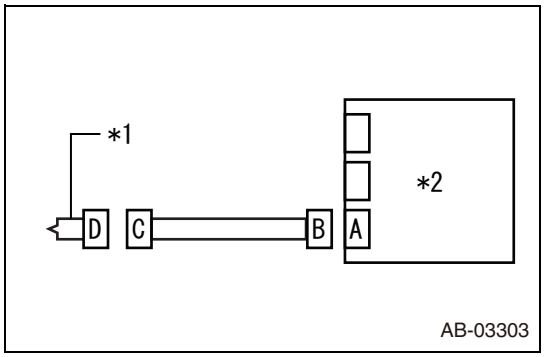

(1) Turn the ignition switch to OFF, disconnect the battery ground terminal, and wait for 60 seconds or more.
(2) Disconnect the airbag resistor from the connector (2N) in the test harness N.
(3) Disconnect the connector (Gc1) from the side airbag module RH.
(4) Disconnect the connector (G11) from the curtain airbag module RH.
(5) Disconnect the connector (D27, G19, H32) from the airbag control module, and connect the connector (1AG) in the test harness AG.
(6) Measure the resistance between the terminals.

Resistance

Inspection terminals	Inspection conditions	Standard value
(3AG) No. 18 - (3AG) No. 20	Always	1 MΩ or more

Captions in illustration

*1	Seat belt pretensioner RH
*2	Airbag control module

NG → Replace the airbag rear harness along with the body harness.

OK

4	Check DTC

(1) Connect all connectors.
(2) Clear the memory.
(3) Perform the reproduction procedure.
(4) Read the DTC. (Current malfunction)
Criteria: DTC B1900 is not displayed.

NG → Replace the airbag control module.

RS

OK

5	Check DTC

Criteria: No other DTC is displayed.

NG → Perform diagnosis for the displayed DTC.

OK

Complete

DTC	B1901	Open in front P/T RH

Circuit description

DTC No.	DTC detected item	Faulty part
B1901	• Seat belt pretensioner RH circuit is open. • Seat belt pretensioner RH is faulty. • Pretensioner harness RH is faulty. • Airbag control module is faulty.	• Seat belt pretensioner RH • Airbag control module • Airbag rear harness

Circuit figure

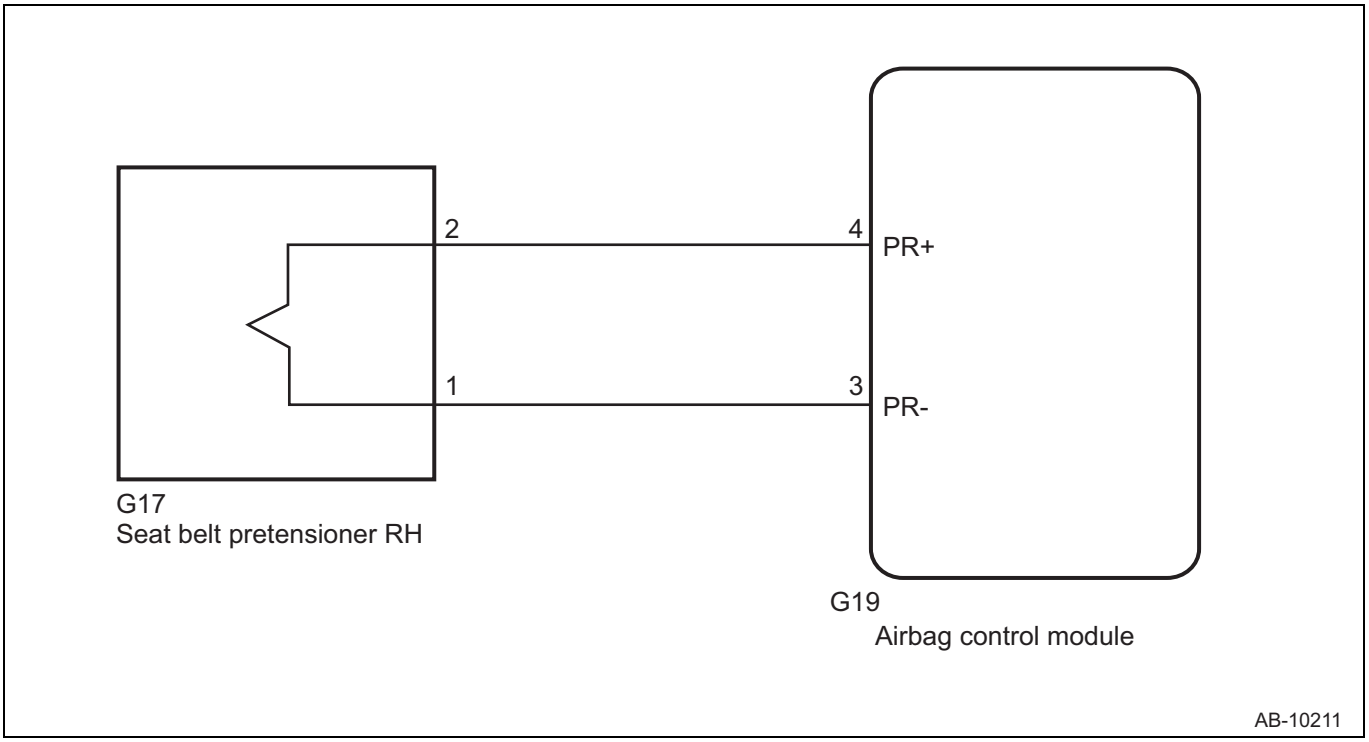

Inspection steps

CAUTION:

Before performing the diagnosis, refer to the precautions.

1	Check poor contact of connectors.

(1) Check for poor contact of the connectors between the airbag control module and the seat belt pretensioner.
Criteria: No fault is found.

NG → Replace the airbag rear harness along with the body harness.

OK

2	Check seat belt pretensioner.

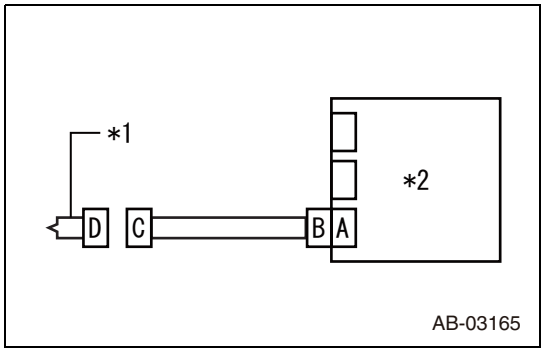

(1) Turn the ignition switch to OFF, disconnect the battery ground terminal, and wait for 60 seconds or more.
(2) Disconnect the connector (G17) from the seat belt pretensioner RH.
(3) Connect the connector (1N) in the test harness N to the connector C.
(4) Connect the airbag resistor to the connector (2N) in the test harness N.
(5) Connect the battery ground terminal and turn the ignition switch to ON.
Criteria: Airbag warning light remains on even after 6 seconds have passed.

Captions in illustration

*1	Seat belt pretensioner RH
*2	Airbag control module

NG → Replace the seat belt pretensioner.

OK

3	Check airbag rear harness (seat belt pretensioner harness RH).

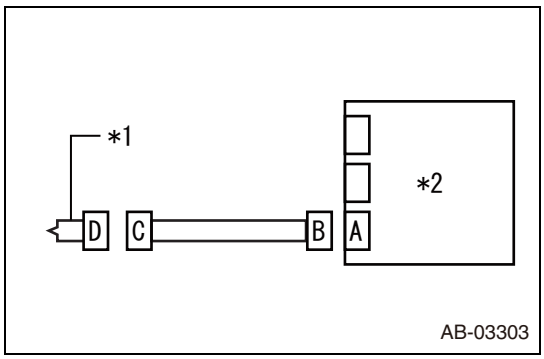

(1) Turn the ignition switch to OFF, disconnect the battery ground terminal, and wait for 60 seconds or more.
(2) Disconnect the airbag resistor from the connector (2N) in the test harness N.
(3) Disconnect the connector (Gc1) from the side airbag module RH.
(4) Disconnect the connector (G11) from the curtain airbag module RH.
(5) Disconnect the connector (D27, G19, H32) from the airbag control module, and connect the connector (1AG) in the test harness AG.
(6) Measure the resistance between the terminals.

Resistance

Inspection terminals	Inspection conditions	Standard value
(3AG) No. 18 - (2N) No. 2	Always	Less than 10 Ω
(3AG) No. 20 - (2N) No. 1	Always	Less than 10 Ω

Captions in illustration

*1	Seat belt pretensioner RH
*2	Airbag control module

NG → Replace the airbag rear harness along with the body harness.

RS

OK

4	Check DTC

(1) Connect all connectors.
(2) Clear the memory.
(3) Perform the reproduction procedure.
(4) Read the DTC. (Current malfunction)
Criteria: DTC B1901 is not displayed.

NG → Replace the airbag control module.

OK

5	Check DTC

Criteria: No other DTC is displayed.

NG → Perform diagnosis for the displayed DTC.

OK

Complete

RS

DTC	B1902	Short in front P/T RH (to ground)

Circuit description

DTC No.	DTC detected item	Faulty part
B1902	• Seat belt pretensioner RH circuit is shorted to ground. • Seat belt pretensioner RH is faulty. • Pretensioner harness RH is faulty. • Airbag control module is faulty.	• Seat belt pretensioner RH • Airbag control module • Airbag rear harness

Circuit figure

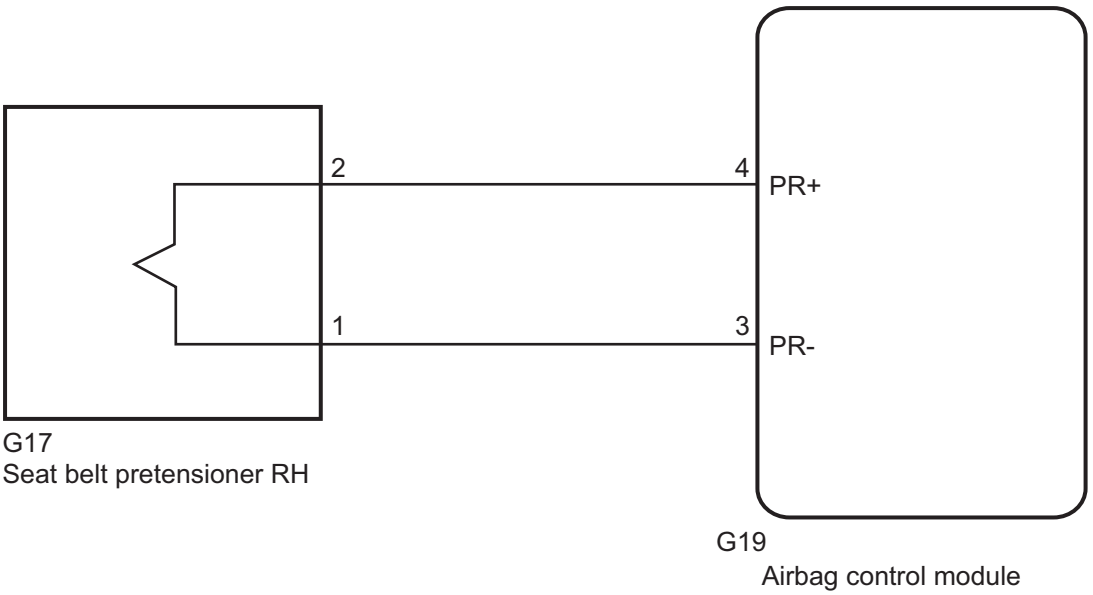

Inspection steps

CAUTION:

Before performing the diagnosis, refer to the precautions.

RS

1	Check poor contact of connectors.

(1) Check for poor contact of the connectors between the airbag control module and the seat belt pretensioner.

Criteria: No fault is found.

NG → Replace the airbag rear harness along with the body harness.

OK

2	Check seat belt pretensioner.

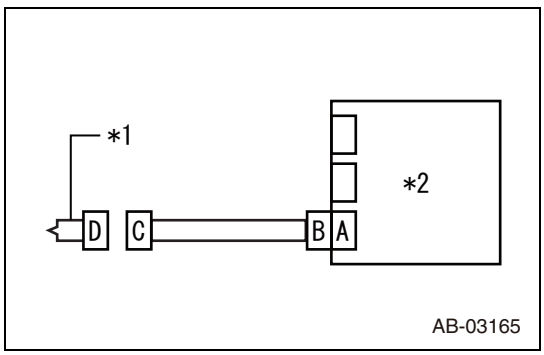

(1) Turn the ignition switch to OFF, disconnect the battery ground terminal, and wait for 60 seconds or more.
(2) Disconnect the connector (G17) from the seat belt pretensioner RH.
(3) Connect the connector (1N) in the test harness N to the connector C.
(4) Connect the airbag resistor to the connector (2N) in the test harness N.
(5) Connect the battery ground terminal and turn the ignition switch to ON.

Criteria: Airbag warning light remains on even after 6 seconds have passed.

Captions in illustration

*1	Seat belt pretensioner RH
*2	Airbag control module

NG → Replace the seat belt pretensioner.

OK

3	Check airbag rear harness (seat belt pretensioner harness RH).

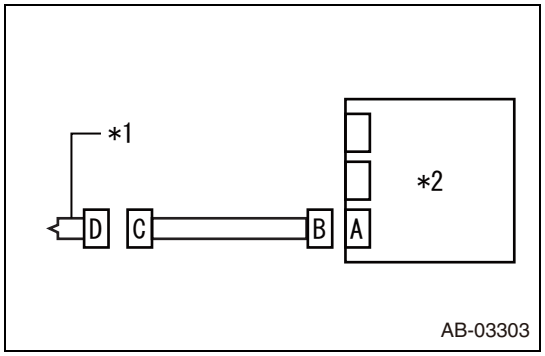

(1) Turn the ignition switch to OFF, disconnect the battery ground terminal, and wait for 60 seconds or more.
(2) Disconnect the airbag resistor from the connector (2N) in the test harness N.
(3) Disconnect the connector (Gc1) from the side airbag module RH.
(4) Disconnect the connector (G11) from the curtain airbag module RH.
(5) Disconnect the connector (D27, G19, H32) from the airbag control module, and connect the connector (1AG) in the test harness AG.
(6) Measure the resistance between the terminals.

Resistance

Inspection terminals	Inspection conditions	Standard value
(3AG) No. 18 - chassis ground	Always	1 MΩ or more
(3AG) No. 20 - chassis ground	Always	1 MΩ or more

Captions in illustration

*1	Seat belt pretensioner RH
*2	Airbag control module

NG → Replace the airbag rear harness along with the body harness.

RS

OK

4	Check DTC

(1) Connect all connectors.
(2) Clear the memory.
(3) Perform the reproduction procedure.
(4) Read the DTC. (Current malfunction)
Criteria: DTC B1902 is not displayed.

NG → Replace the airbag control module.

OK

5	Check DTC

Criteria: No other DTC is displayed.

NG → Perform diagnosis for the displayed DTC.

OK

Complete

DTC	B1903	Short in front P/T RH (to +B)

Circuit description

DTC No.	DTC detected item	Faulty part
B1903	• Seat belt pretensioner RH circuit is shorted to power supply. • Seat belt pretensioner RH is faulty. • Pretensioner harness RH is faulty. • Airbag control module is faulty.	• Seat belt pretensioner RH • Airbag control module • Airbag rear harness

Circuit figure

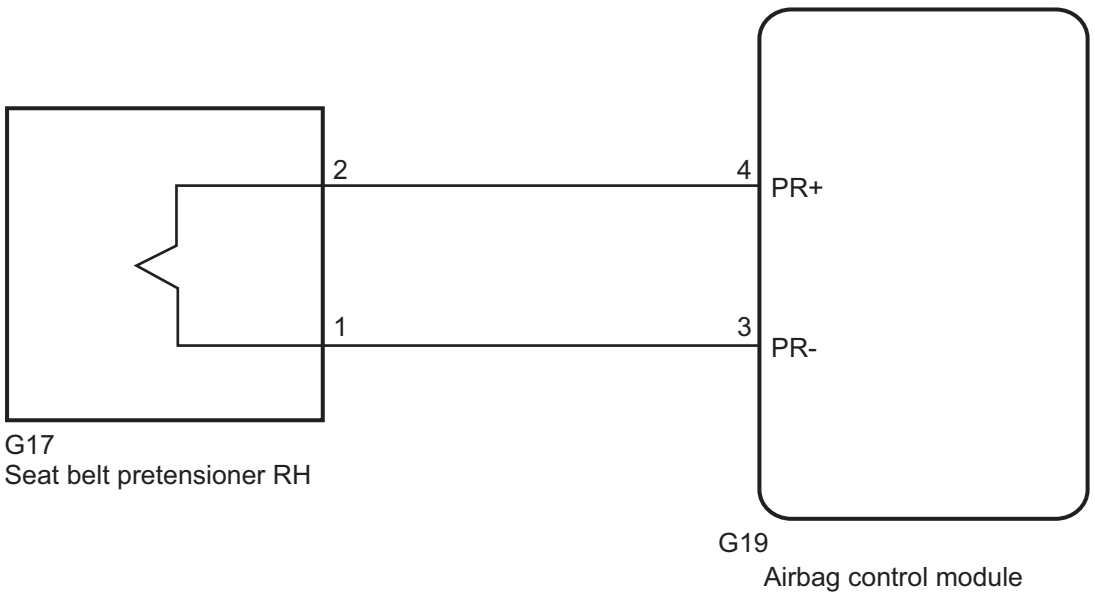

Inspection steps

CAUTION:

Before performing the diagnosis, refer to the precautions.

1	Check poor contact of connectors.

(1) Check for poor contact of the connectors between the airbag control module and the seat belt pretensioner.

Criteria: No fault is found.

NG → Replace the airbag rear harness along with the body harness.

OK

RS

2	Check seat belt pretensioner.

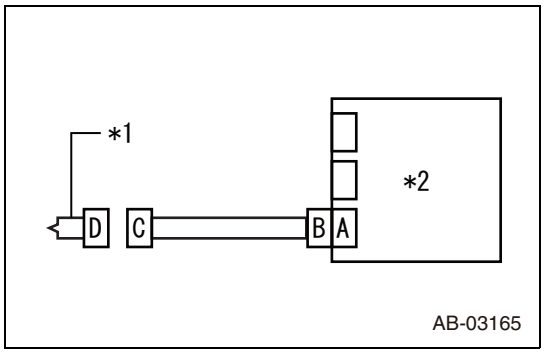

(1) Turn the ignition switch to OFF, disconnect the battery ground terminal, and wait for 60 seconds or more.
(2) Disconnect the connector (G17) from the seat belt pretensioner RH.
(3) Connect the connector (1N) in the test harness N to the connector C.
(4) Connect the airbag resistor to the connector (2N) in the test harness N.
(5) Connect the battery ground terminal and turn the ignition switch to ON.
Criteria: Airbag warning light remains on even after 6 seconds have passed.

Captions in illustration

*1	Seat belt pretensioner RH
*2	Airbag control module

NG → Replace the seat belt pretensioner.

OK

3	Check airbag rear harness (seat belt pretensioner harness RH).

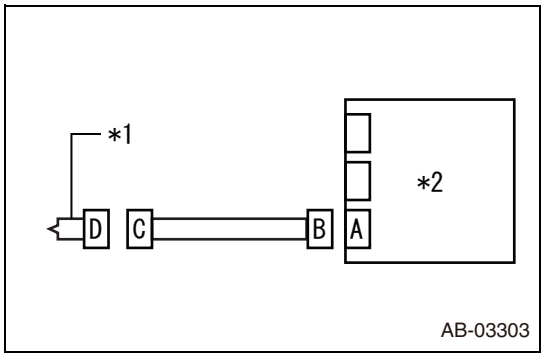

(1) Turn the ignition switch to OFF, disconnect the battery ground terminal, and wait for 60 seconds or more.
(2) Disconnect the airbag resistor from the connector (2N) in the test harness N.
(3) Disconnect the connector (Gc1) from the side airbag module RH.
(4) Disconnect the connector (G11) from the curtain airbag module RH.
(5) Disconnect the connector (D27, G19, H32) from the airbag control module, and connect the connector (1AG) in the test harness AG.
(6) Measure the voltage between terminals.

Voltage

Inspection terminals	Inspection conditions	Standard value
(3AG) No. 20 (+) - chassis ground (-)	IG ON	Less than 1 V
(3AG) No. 18 (+) - chassis ground (-)	IG ON	Less than 1 V

Captions in illustration

*1	Seat belt pretensioner RH
*2	Airbag control module

NG → Replace the airbag rear harness along with the body harness.

OK

4	Check DTC

(1) Connect all connectors.
(2) Clear the memory.
(3) Perform the reproduction procedure.
(4) Read the DTC. (Current malfunction)
Criteria: DTC B1903 is not displayed.

NG → Replace the airbag control module.

OK

5	Check DTC

Criteria: No other DTC is displayed.

NG → Perform diagnosis for the displayed DTC.

OK

Complete

DTC	B1905	Short in front P/T LH

Circuit description

DTC No.	DTC detected item	Faulty part
B1905	• Seat belt pretensioner LH circuit is shorted. • Seat belt pretensioner LH is faulty. • Pretensioner harness LH is faulty. • Airbag control module is faulty.	• Seat belt pretensioner LH • Airbag control module • Airbag rear harness

RS

Circuit figure

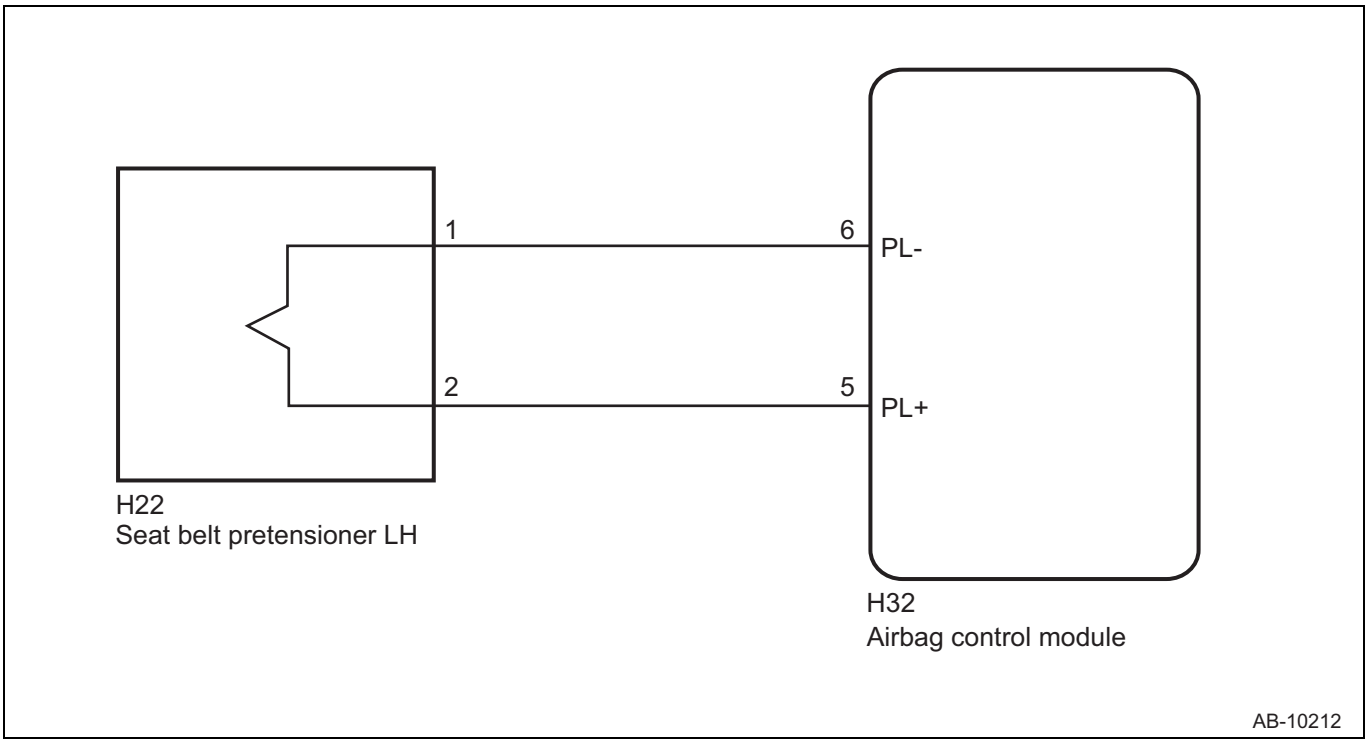

Inspection steps

CAUTION:

Before performing the diagnosis, refer to the precautions.

1	Check poor contact of connectors.

(1) Check for poor contact of the connectors between the airbag control module and the seat belt pretensioner.
Criteria: No fault is found.

NG → Replace the airbag rear harness along with the body harness.

OK

2	Check seat belt pretensioner.

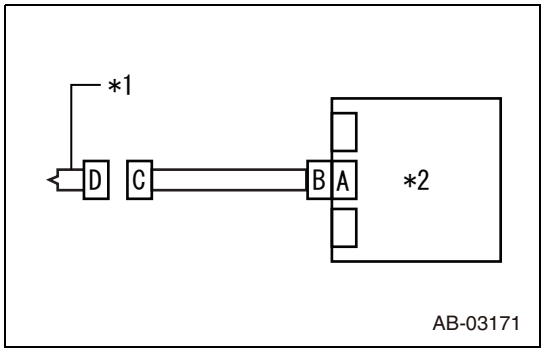

AB-03171

(1) Turn the ignition switch to OFF, disconnect the battery ground terminal, and wait for 60 seconds or more.
(2) Disconnect the connector (H22) from the seat belt pretensioner LH.
(3) Connect the connector (1N) in the test harness N to the connector C.
(4) Connect the airbag resistor to the connector (2N) in the test harness N.
(5) Connect the battery ground terminal and turn the ignition switch to ON.
Criteria: Airbag warning light remains on even after 6 seconds have passed.

Captions in illustration

*1	Seat belt pretensioner LH
*2	Airbag control module

NG → Replace the seat belt pretensioner.

OK

3	Check airbag rear harness (seat belt pretensioner harness LH).

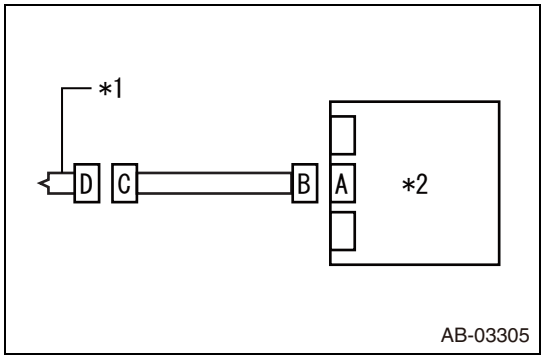

AB-03305

(1) Turn the ignition switch to OFF, disconnect the battery ground terminal, and wait for 60 seconds or more.
(2) Disconnect the airbag resistor from the connector (2N) in the test harness N.
(3) Disconnect the connector (Hb1) from the side airbag module LH.
(4) Disconnect the connector (H30) from the curtain airbag module LH.
(5) Disconnect the connector (D27, G19, H32) from the airbag control module, and connect the connector (1AG) in the test harness AG.
(6) Measure the resistance between the terminals.

Resistance

Inspection terminals	Inspection conditions	Standard value
(3AG) No. 10 - (3AG) No. 12	Always	1 MΩ or more

Captions in illustration

*1	Seat belt pretensioner LH
*2	Airbag control module

NG → Replace the airbag rear harness along with the body harness.

RS

OK

4	Check DTC

(1) Connect all connectors.
(2) Clear the memory.
(3) Perform the reproduction procedure.
(4) Read the DTC. (Current malfunction)
Criteria: DTC B1905 is not displayed.

NG → Replace the airbag control module.

OK

5	Check DTC

Criteria: No other DTC is displayed.

NG → Perform diagnosis for the displayed DTC.

OK

Complete

RS

DTC	B1906	Open in front P/T LH

Circuit description

DTC No.	DTC detected item	Faulty part
B1906	• Pretensioner harness LH circuit is open. • Seat belt pretensioner LH is faulty. • Pretensioner harness LH is faulty. • Airbag control module is faulty.	• Seat belt pretensioner LH • Airbag control module • Airbag rear harness

Circuit figure

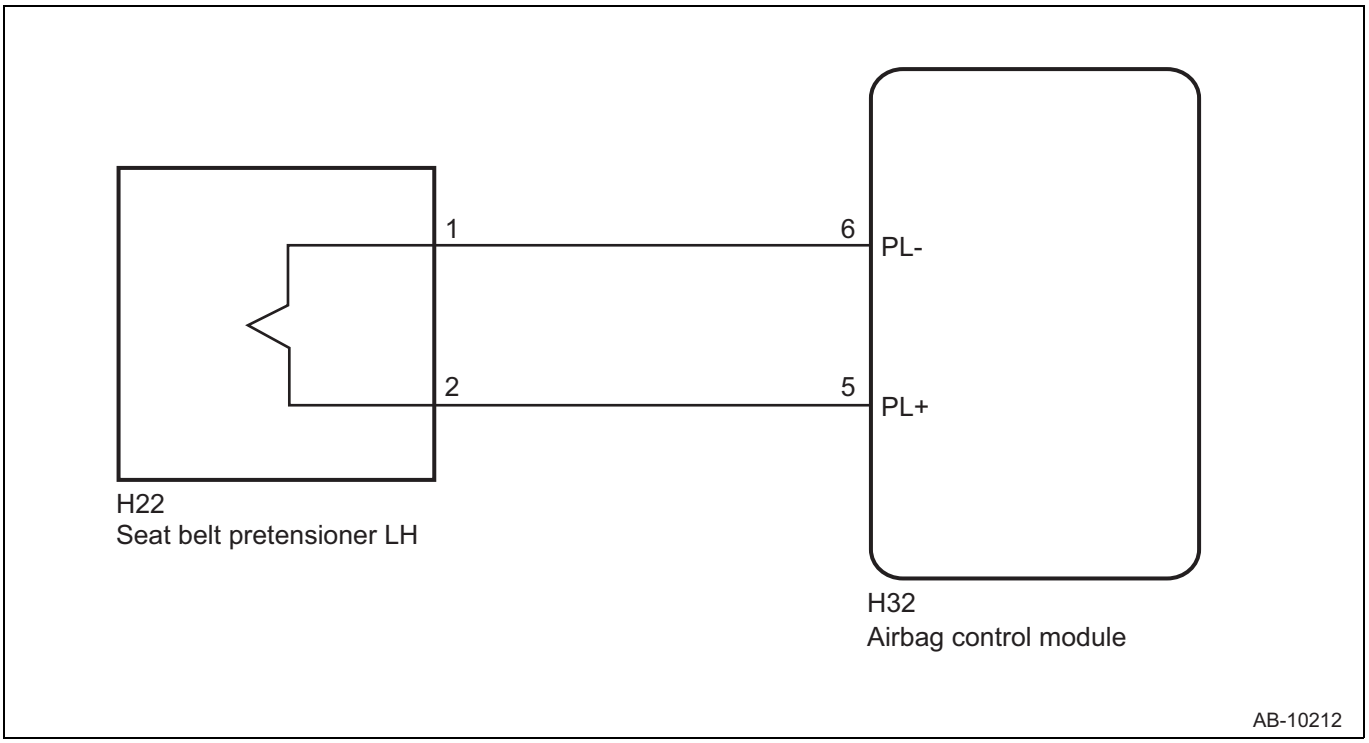

Inspection steps

RS

CAUTION:
Before performing the diagnosis, refer to the precautions.

1	Check poor contact of connectors.

(1) Check for poor contact of the connectors between the airbag control module and the seat belt pretensioner.
Criteria: No fault is found.

NG → Replace the airbag rear harness along with the body harness.

OK

2	Check seat belt pretensioner.

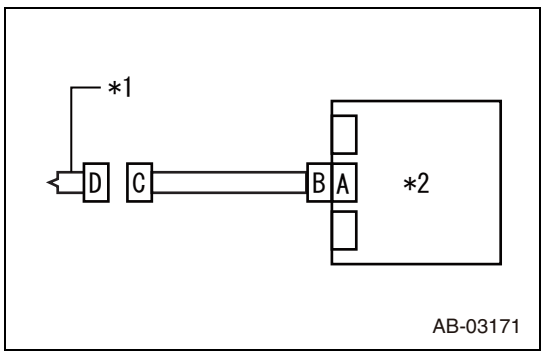

(1) Turn the ignition switch to OFF, disconnect the battery ground terminal, and wait for 60 seconds or more.
(2) Disconnect the connector (H22) from the seat belt pretensioner LH.
(3) Connect the connector (1N) in the test harness N to the connector C.
(4) Connect the airbag resistor to the connector (2N) in the test harness N.
(5) Connect the battery ground terminal and turn the ignition switch to ON.
Criteria: Airbag warning light remains on even after 6 seconds have passed.

Captions in illustration

*1	Seat belt pretensioner LH
*2	Airbag control module

NG → Replace the seat belt pretensioner.

OK

3	Check airbag rear harness (seat belt pretensioner harness LH).

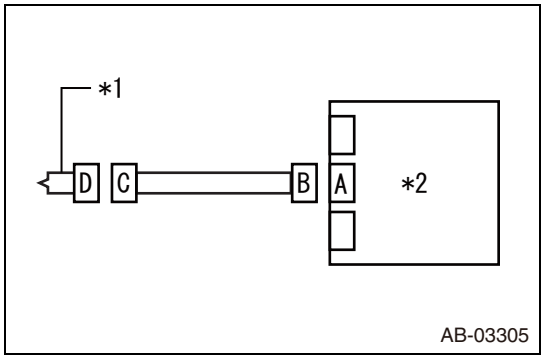

(1) Turn the ignition switch to OFF, disconnect the battery ground terminal, and wait for 60 seconds or more.
(2) Disconnect the airbag resistor from the connector (2N) in the test harness N.
(3) Disconnect the connector (Hb1) from the side airbag module LH.
(4) Disconnect the connector (H30) from the curtain airbag module LH.
(5) Disconnect the connector (D27, G19, H32) from the airbag control module, and connect the connector (1AG) in the test harness AG.
(6) Measure the resistance between the terminals.

Resistance

Inspection terminals	Inspection conditions	Standard value
(3AG) No. 10 - (2N) No. 1	Always	Less than 10 Ω
(3AG) No. 12 - (2N) No. 2	Always	Less than 10 Ω

Captions in illustration

*1	Seat belt pretensioner LH
*2	Airbag control module

NG → Replace the airbag rear harness along with the body harness.

RS

OK

4	Check DTC

(1) Connect all connectors.
(2) Clear the memory.
(3) Perform the reproduction procedure.
(4) Read the DTC. (Current malfunction)
Criteria: DTC B1906 is not displayed.

NG → Replace the airbag control module.

OK

5	Check DTC

Criteria: No other DTC is displayed.

NG → Perform diagnosis for the displayed DTC.

OK

Complete

DTC	B1907	Short in front P/T LH (to ground)

Circuit description

DTC No.	DTC detected item	Faulty part
B1907	• Seat belt pretensioner LH circuit is shorted to ground. • Seat belt pretensioner LH is faulty. • Pretensioner harness LH is faulty. • Airbag control module is faulty.	• Seat belt pretensioner LH • Airbag control module • Airbag rear harness

Circuit figure

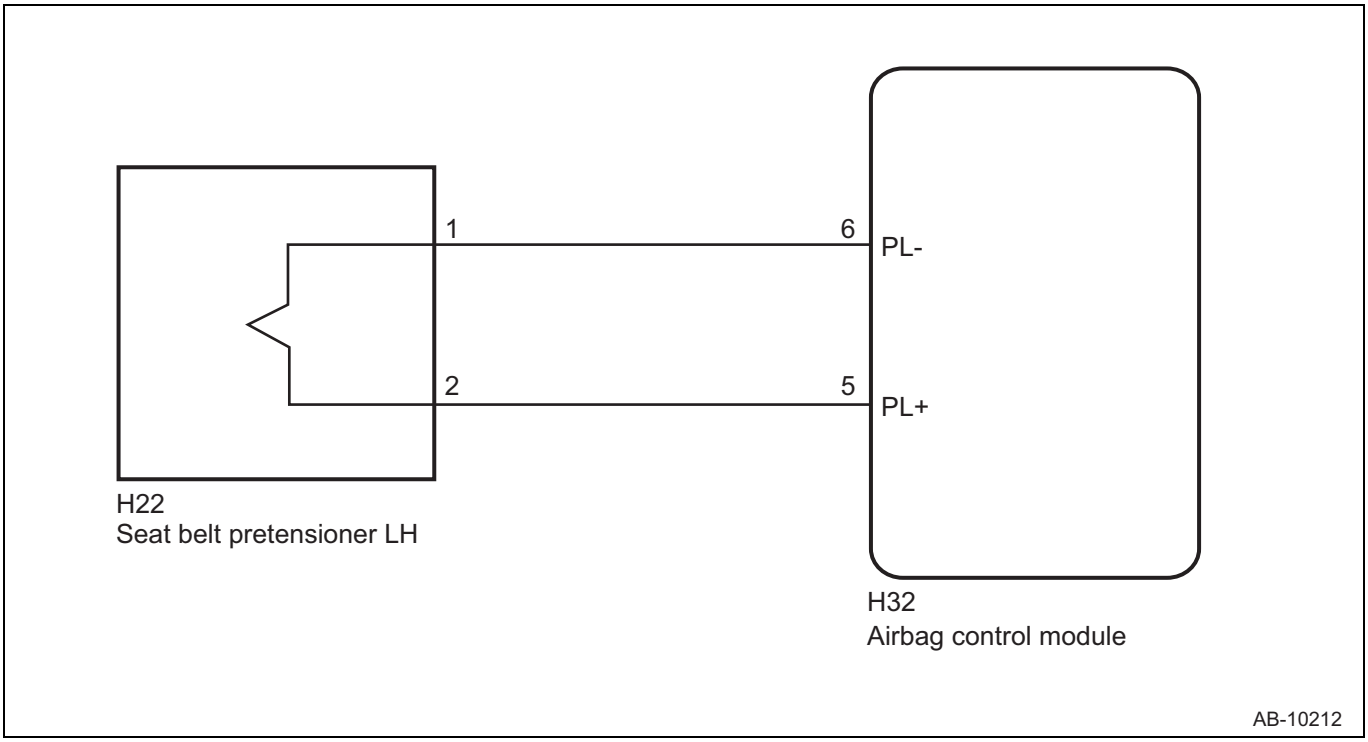

RS

Inspection steps

CAUTION:

Before performing the diagnosis, refer to the precautions.

1	Check poor contact of connectors.

(1) Check for poor contact of the connectors between the airbag control module and the seat belt pretensioner.

Criteria: No fault is found.

NG → Replace the airbag rear harness along with the body harness.

OK

2	Check seat belt pretensioner.

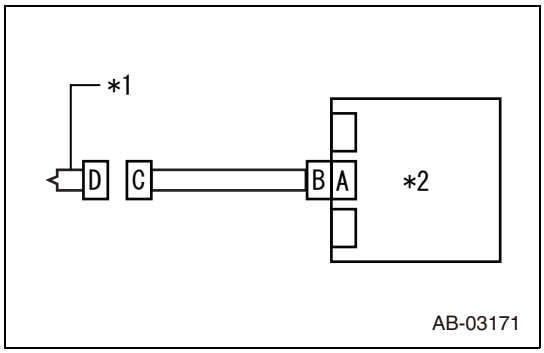

(1) Turn the ignition switch to OFF, disconnect the battery ground terminal, and wait for 60 seconds or more.
(2) Disconnect the connector (H22) from the seat belt pretensioner LH.
(3) Connect the connector (1N) in the test harness N to the connector C.
(4) Connect the airbag resistor to the connector (2N) in the test harness N.
(5) Connect the battery ground terminal and turn the ignition switch to ON.
Criteria: Airbag warning light remains on even after 6 seconds have passed.

Captions in illustration

*1	Seat belt pretensioner LH
*2	Airbag control module

NG → Replace the seat belt pretensioner.

OK

3	Check airbag rear harness (seat belt pretensioner harness LH).

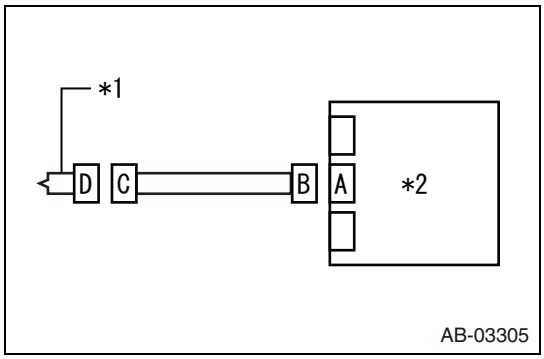

(1) Turn the ignition switch to OFF, disconnect the battery ground terminal, and wait for 60 seconds or more.
(2) Disconnect the airbag resistor from the connector (2N) in the test harness N.
(3) Disconnect the connector (Hb1) from the side airbag module LH.
(4) Disconnect the connector (H30) from the curtain airbag module LH.
(5) Disconnect the connector (D27, G19, H32) from the airbag control module, and connect the connector (1AG) in the test harness AG.
(6) Measure the resistance between the terminals.

Resistance

Inspection terminals	Inspection conditions	Standard value
(3AG) No. 10 - chassis ground	Always	1 MΩ or more
(3AG) No. 12 - chassis ground	Always	1 MΩ or more

Captions in illustration

*1	Seat belt pretensioner LH
*2	Airbag control module

NG → Replace the airbag rear harness along with the body harness.

OK

4	Check DTC

(1) Connect all connectors.
(2) Clear the memory.
(3) Perform the reproduction procedure.
(4) Read the DTC. (Current malfunction)
Criteria: DTC B1907 is not displayed.

RS

NG → Replace the airbag control module.

OK

5	Check DTC

Criteria: No other DTC is displayed.

NG → Perform diagnosis for the displayed DTC.

OK

Complete

DTC	B1908	Short in front P/T LH (to +B)

Circuit description

DTC No.	DTC detected item	Faulty part
B1908	• Pretensioner harness LH is shorted to power supply. • Seat belt pretensioner LH is faulty. • Pretensioner harness LH is faulty. • Airbag control module is faulty.	• Seat belt pretensioner LH • Airbag control module • Airbag rear harness

RS

Circuit figure

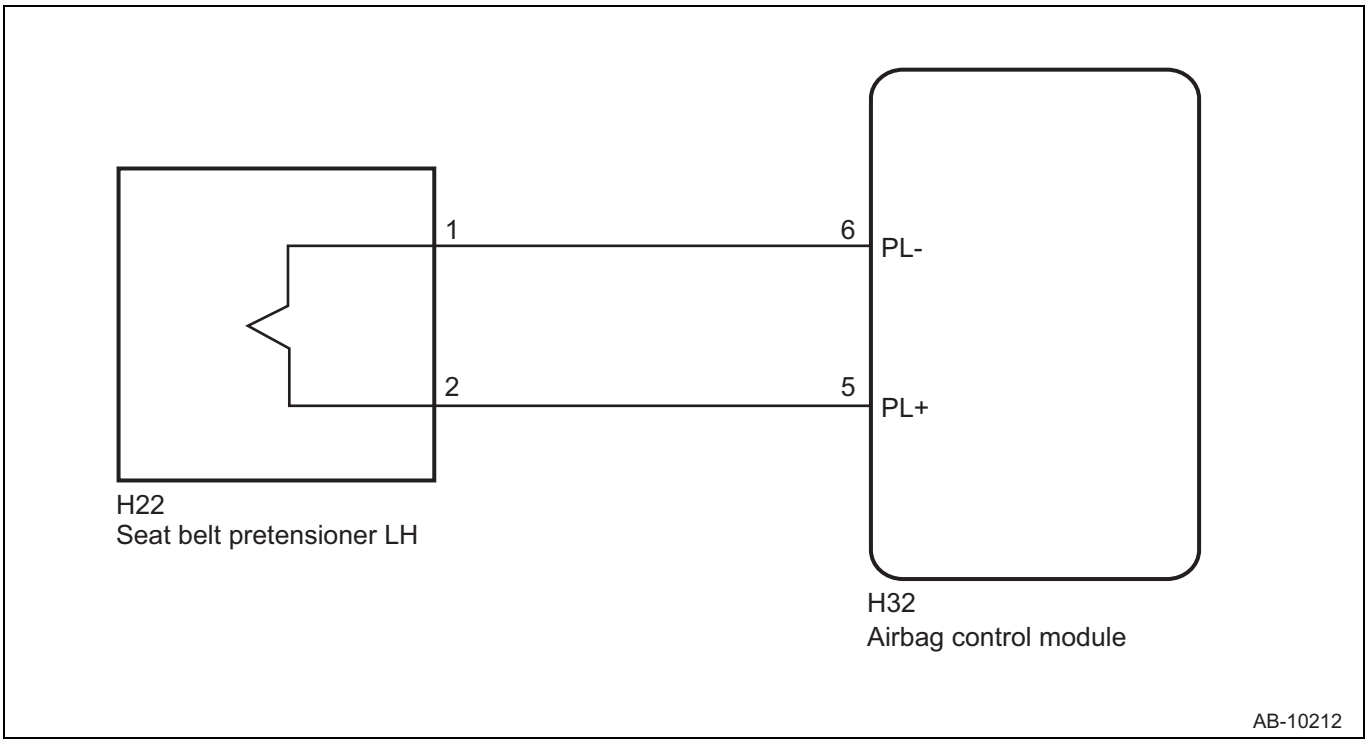

Inspection steps

CAUTION:

Before performing the diagnosis, refer to the precautions.

1	Check poor contact of connectors.

(1) Check for poor contact of the connectors between the airbag control module and the seat belt pretensioner.
Criteria: No fault is found.

NG → Replace the airbag rear harness along with the body harness.

OK

2	Check seat belt pretensioner.

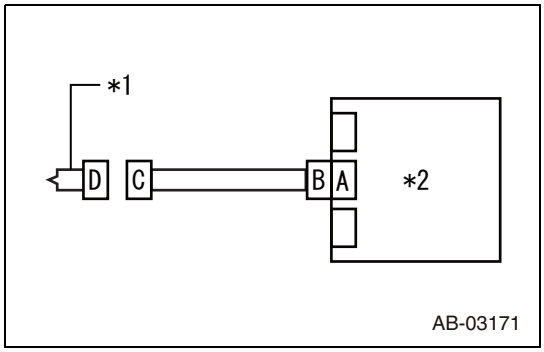

AB-03171

(1) Turn the ignition switch to OFF, disconnect the battery ground terminal, and wait for 60 seconds or more.
(2) Disconnect the connector (H22) from the seat belt pretensioner LH.
(3) Connect the connector (1N) in the test harness N to the connector C.
(4) Connect the airbag resistor to the connector (2N) in the test harness N.
(5) Connect the battery ground terminal and turn the ignition switch to ON.
Criteria: Airbag warning light remains on even after 6 seconds have passed.

Captions in illustration

*1	Seat belt pretensioner LH
*2	Airbag control module

NG → Replace the seat belt pretensioner.

OK

3	Check airbag rear harness (seat belt pretensioner harness LH).

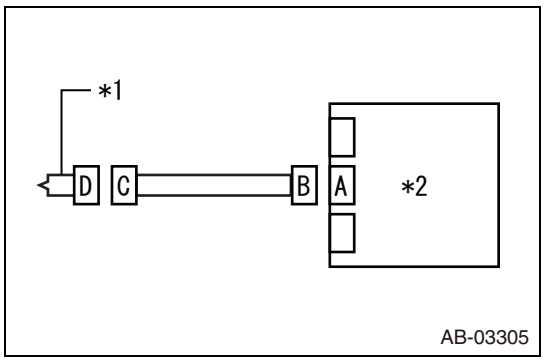

AB-03305

(1) Turn the ignition switch to OFF, disconnect the battery ground terminal, and wait for 60 seconds or more.
(2) Disconnect the airbag resistor from the connector (2N) in the test harness N.
(3) Disconnect the connector (Hb1) from the side airbag module LH.
(4) Disconnect the connector (H30) from the curtain airbag module LH.
(5) Disconnect the connector (D27, G19, H32) from the airbag control module, and connect the connector (1AG) in the test harness AG.
(6) Measure the voltage between terminals.

Voltage

Inspection terminals	Inspection conditions	Standard value
(3AG) No. 10 (+) - chassis ground (-)	IG ON	Less than 1 V
(3AG) No. 12 (+) - chassis ground (-)	IG ON	Less than 1 V

Captions in illustration

*1	Seat belt pretensioner LH
*2	Airbag control module

NG → Replace the airbag rear harness along with the body harness.

RS

OK

4	Check DTC

(1) Connect all connectors.
(2) Clear the memory.
(3) Perform the reproduction procedure.
(4) Read the DTC. (Current malfunction)
Criteria: DTC B1908 is not displayed.

NG → Replace the airbag control module.

OK

5	Check DTC

Criteria: No other DTC is displayed.

NG → Perform diagnosis for the displayed DTC.

OK

Complete

Occupant detection system

Precautions

1. Precautions for replacing the occupant detection system
   (1) The occupant detection control module and the occupant detection sensor of the occupant detection system (only for the passenger's seat) are fixed to the seat cushion frame. Never remove the occupant detection control module or the occupant detection sensor from the seat cushion frame.
   (2) Do not replace the seat cushion pad by itself. The seat cushion pad & frame ASSY must be replaced as a whole. The seat cushion pad and the cushion frame are adjusted as an assembly at the time of manufacturing. If they are combined with those of other vehicles or assemblies, the occupant detection system may not operate properly.
   (3) When removing the seat cushion cover, be sure to replace the hang wire on the seat cushion side with new one.
   (4) Never connect the battery in reverse polarity. Reverse connection may instantly damage the occupant detection system.
   (5) While the engine is running, do not disconnect the battery cable. A large counter electromotive force will be generated in the generator, and this voltage may damage the electronic parts such as an occupant detection control module.
   (6) Before disconnecting the connectors of the sensors and the control module, make sure to turn the ignition switch to OFF, and wait for 60 seconds or more. Otherwise, it may damage the occupant detection control module.
   (7) All parts related to the occupant detection system are precision parts. Do not to drop these parts.
   CAUTION:
   - Do not use electronic test instrument for the circuit of airbag system wiring harness and connectors.
   - When servicing the occupant detection system, be careful not to damage the wiring harness of airbag system.
   - When repairing the occupant detection system, refer to the precautions for the airbag system.

Inspection

1. Measure the battery voltage and check the battery fluid.
   Standard voltage: 12V
   Specific gravity: 1.260 or more

RS

Preparation tool

CAUTION:
When measuring the voltage, resistance, etc. of the airbag system components, be sure to use the specified test harness.

1. Subaru Select Monitor

Shape	Tool number	Remarks
 STSSM4	—	Used for diagnosing electrical system failure.

2. Test harness Y

Tool number	Remarks
98299AG040	Used for diagnosing the seat belt buckle switch failure.

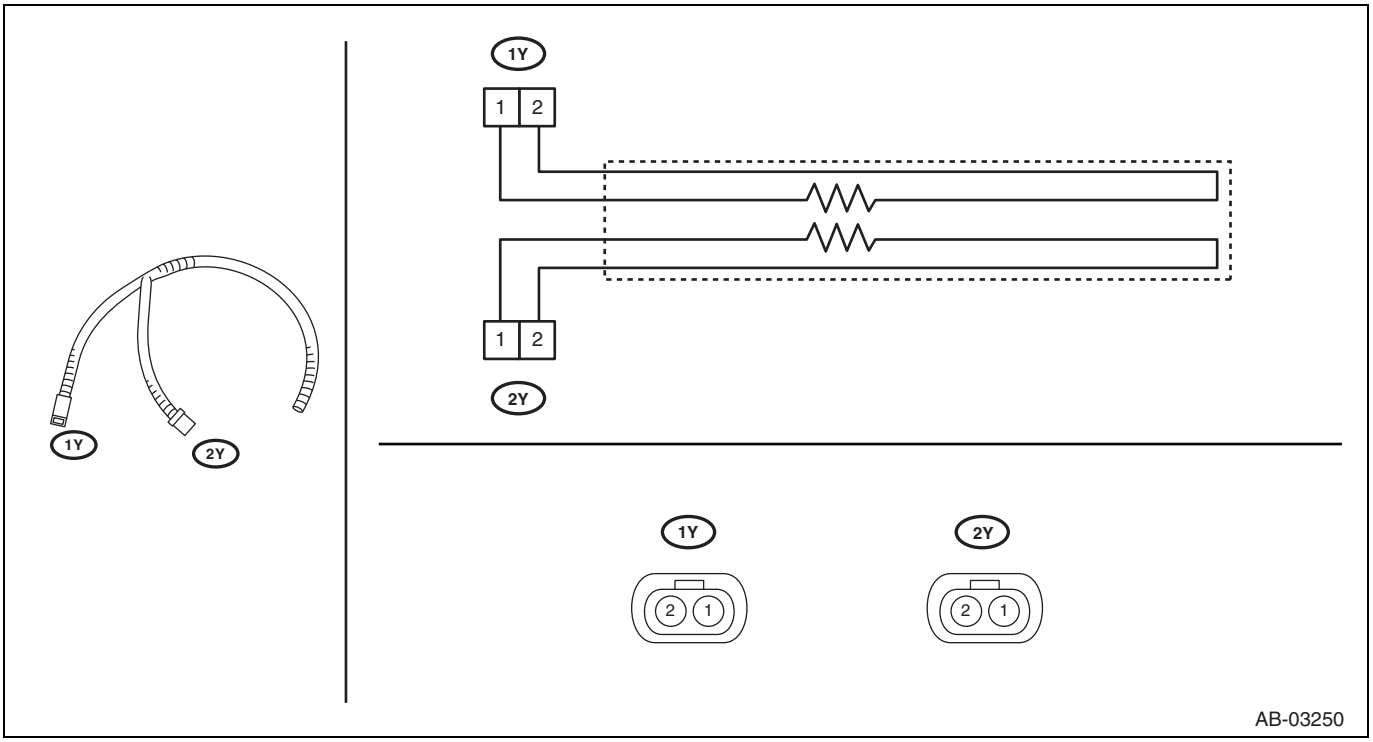

3. Test harness AE

Tool number	Remarks
98299XA030	Adapter harness for test harness Y Used for diagnosing the seat belt buckle switch failure.

RS

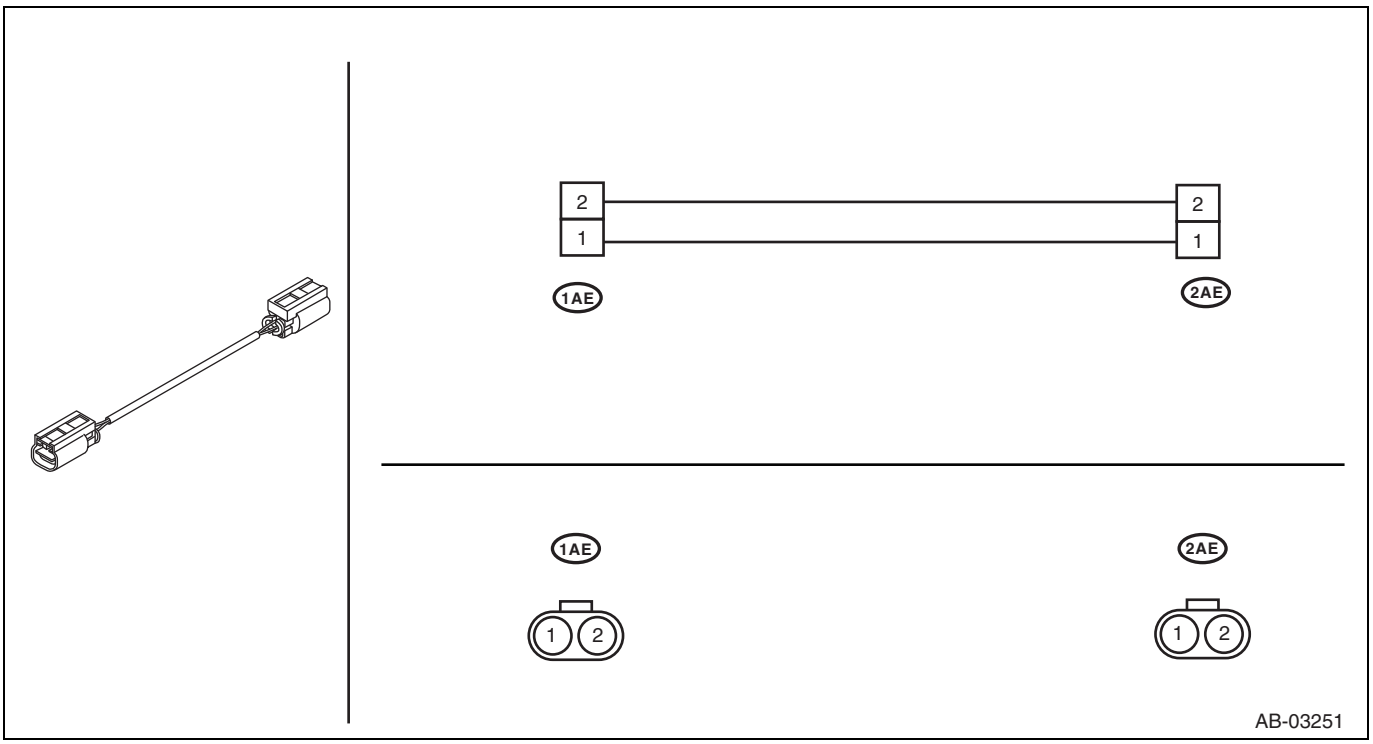

4. Test harness AS

Tool number	Remarks
98299CA010	Used when measuring voltage and resistance of the occupant detection system.

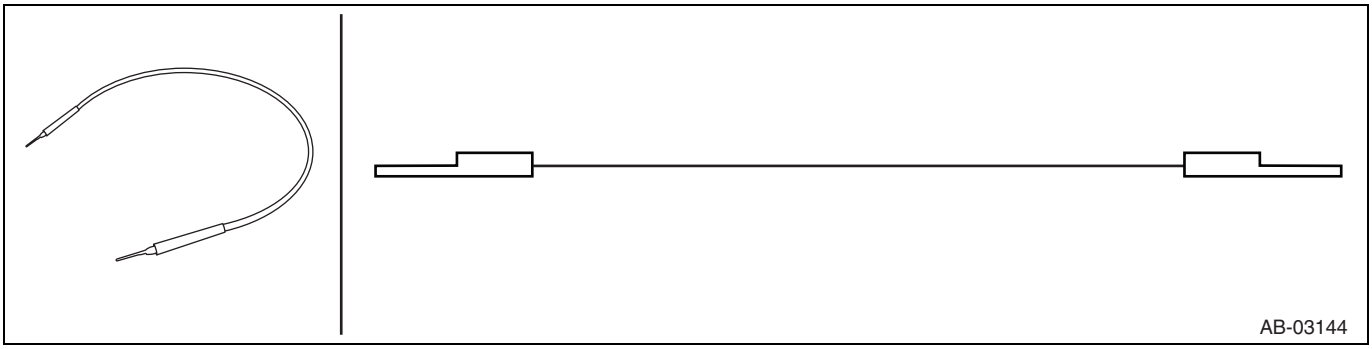

Parts location

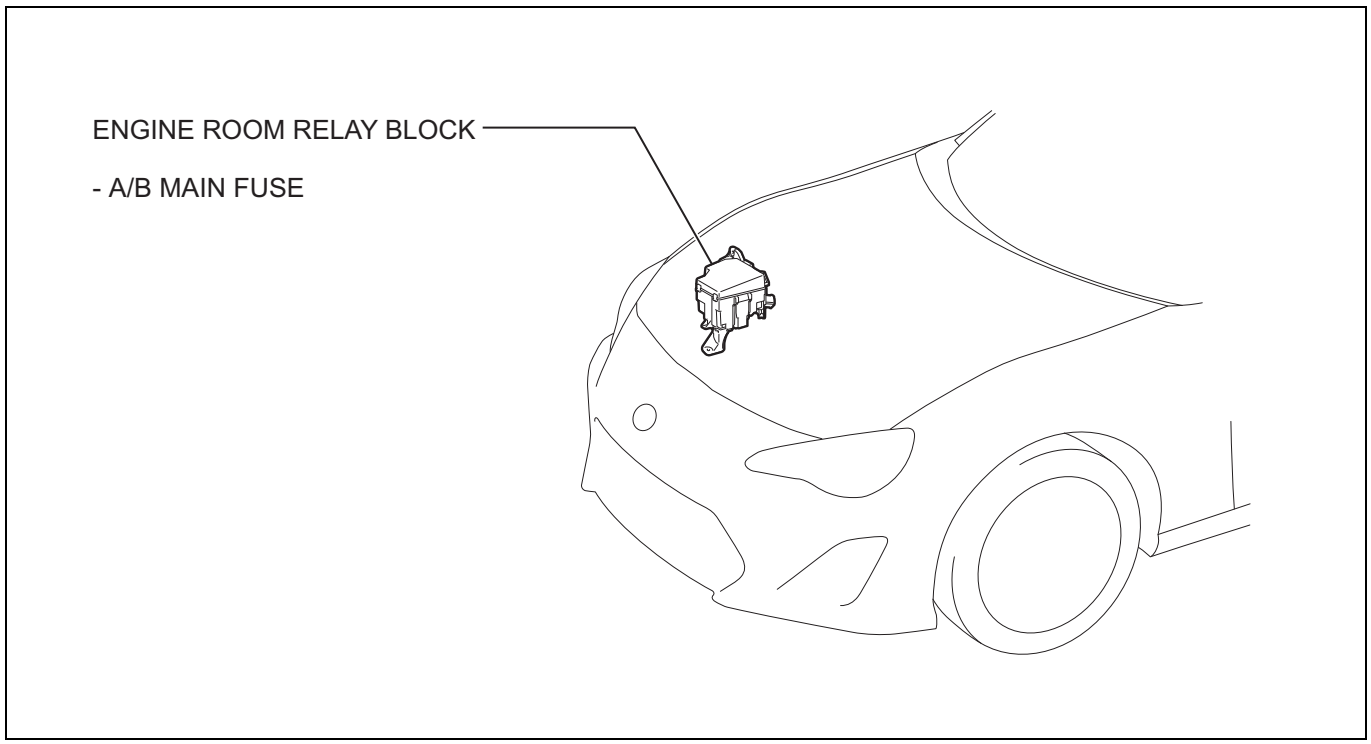

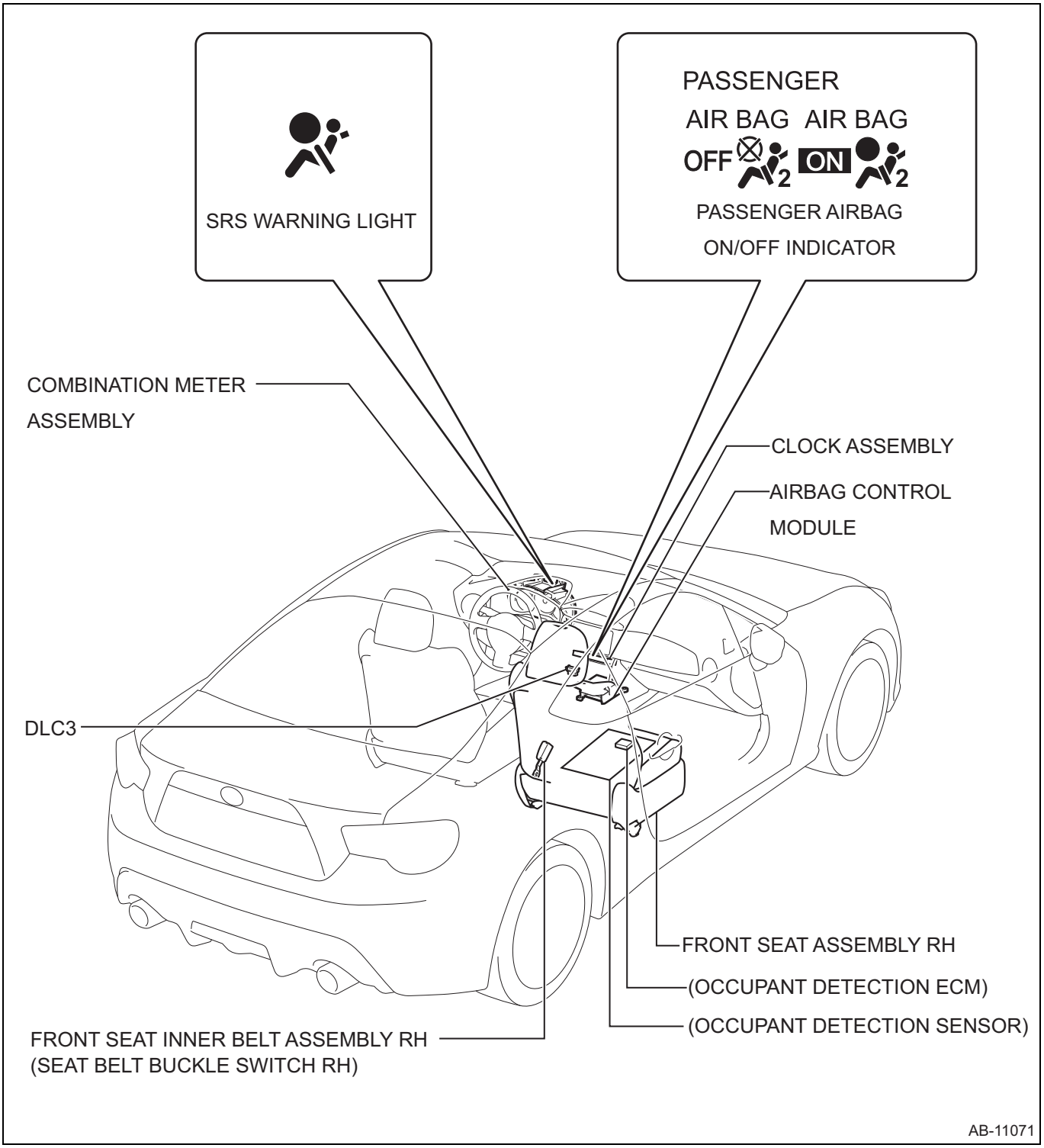

RS

Airbag connector

1. How to disconnect the occupant detection system between airbag rear harness and seat harness
   CAUTION:
   When pulling the slide lock or disconnecting connector, be sure to hold the connector, not the harness.
   (1) Disconnect the connector by pressing the lock arm (B) of the connector connected to connector (A) under the passenger's seat.

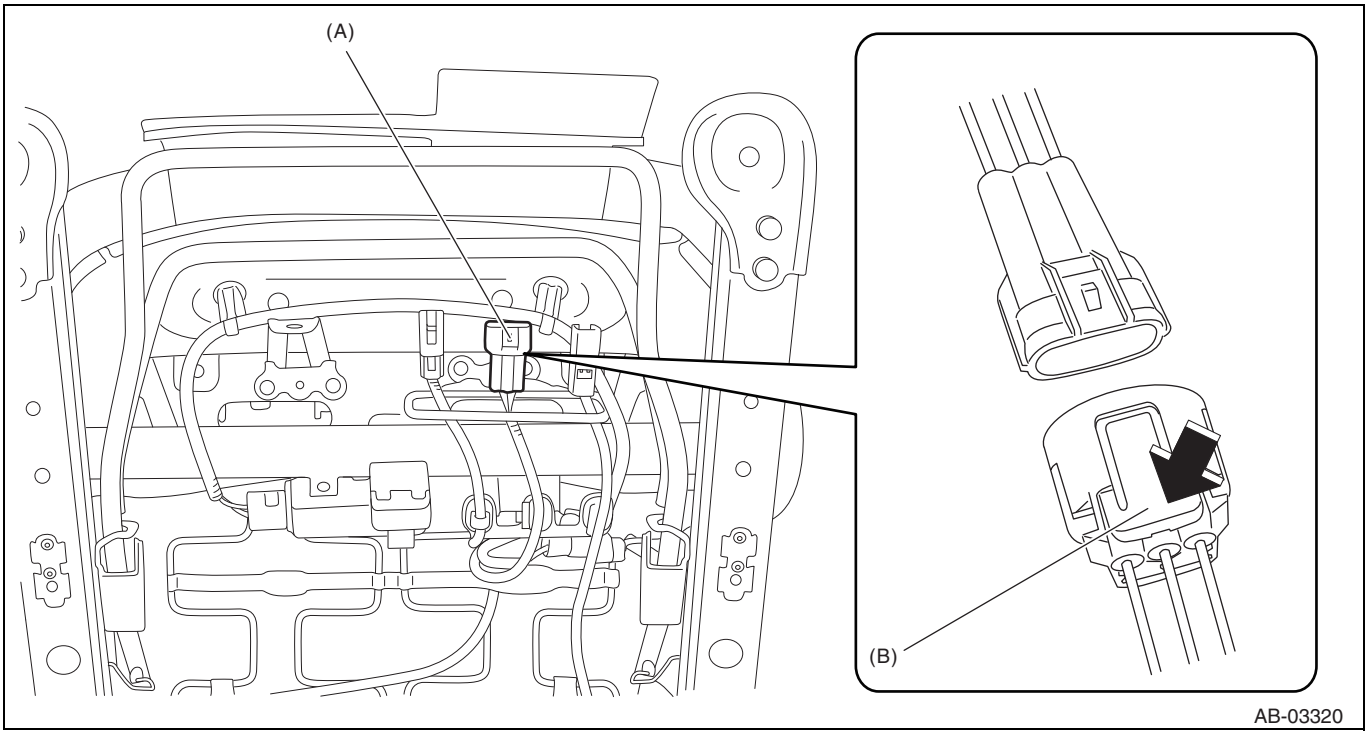

2. How to connect the occupant detection system between airbag rear harness and seat harness
   CAUTION:
   Be sure to insert the connector in until it is locked. Then pull it gently to make sure that it is locked.
   (1) Holding the connector, push it in securely until a clicking sound is heard.
3. Airbag control module
   (1) Refer to "SRS airbag system". (Refer to RS - 24)
4. Buckle switch RH
   (1) Refer to "SRS airbag system". (Refer to RS - 24)

RS

List of diagnostic codes

DTC	Item	Diagnosis contents	Reference pages
B1650	Occupant classification system malfunction	• Occupant detection sensor is faulty. • Occupant detection control module is faulty. • Occupant detection harness is faulty. • Rear airbag harness RH is faulty. • A/B MAIN fuse (15 A) is blown.	RS - 238
B1655	Front Buckle Switch RH Failure	• The buckle switch RH circuit is open, shorted, or short-circuited to ground. • Occupant detection system is faulty. • Occupant detection harness is faulty.	RS - 240
B1760	Sensor mat abnormal	• Occupant detection sensor is faulty. • Open circuit in the occupant detection sensor, short between terminals, shorted to power supply, and shorted to ground. • Open circuit in seat heater. • Occupant detection control module is faulty.	RS - 241
B1761	Sensor mat liquid coating abnormal	• Liquid coating abnormality is detected in occupant detection sensor. • Occupant detection sensor is faulty. • Occupant detection control module is faulty.	RS - 242
B1771	Buckle switch malfunction	• Passenger's seat buckle switch is faulty. • Passenger's buckle switch circuit is open, shorted, or short-circuited to ground. • Occupant detection system is faulty. • Occupant detection harness is faulty.	RS - 243
B1795	ECM internal circuit fault	Occupant detection control module is faulty.	RS - 244

How to troubleshoot

1	Bring in the car

Next

2	Interview and phenomenon check

(1) Phenomenon check

Next

3	Check the warning light

(1) Check CAN communication system. (Refer to NW - 30)
Result

Result	Go to
The airbag warning light illuminates.	A
The airbag warning light does not illuminate.	B

B → Perform the diagnosis according to the trouble phenomenon

RS

A

4	Read the DTC

(1) Turn the ignition switch to OFF.
(2) Connect the Subaru Select Monitor to data link connector.
(3) Turn the ignition switch to ON and start the Subaru Select Monitor.
(4) Read the DTC.
NOTE:
Check the communication circuit if the communication function of the Subaru Select Monitor does not function normally.
(5) Record all DTCs and failure status information.
Result

Result	Go to
DTC is detected.	A
No DTC is detected	B

B → Perform the inspection by referring to "Fault in the airbag warning light".

A

5	Perform diagnosis

(1) Use the list of diagnostic codes to determine the cause of the fault.
(2) Perform inspection according to the diagnostic code.
(3) Repair the cause of trouble.
(4) Delete the diagnostic code.

(5) Execute the check mode.
(6) Confirm that no other DTC is detected.
Result

Result	Go to
DTC is detected.	A
No DTC is detected	B

B → Complete the diagnosis.

A

Perform steps (1) to (5) of Step 5.

Subaru Select Monitor

Operation
For detailed operation procedures, refer to "PC application help".

Communication for initializing in airbag system is not working

Perform inspection when communication between the airbag control module and the Subaru Select Monitor is not possible
Detection conditions
Trouble in harness connectors.
Trouble symptom
Communication between airbag control module and the Subaru Select Monitor is not working.
Inspection steps
Refer to "Communication for initializing is not possible" in "SRS airbag system". (Refer to RS - 46)

Communication for initializing is not possible only in the occupant detection system

NOTE:
The occupant detection system communicates with the Subaru Select Monitor through the airbag control module.
Detection conditions
Trouble in the harness connector between the airbag control module and the occupant detection system
Trouble symptom
Communication between the airbag control module and the occupant detection system is not possible.
Inspection steps
Perform the diagnosis starting from the step 2 of "DTC B1650 Occupant Classification System Malfunction".

Check list for interview

Customer's name		Inspector's name	
Vehicle bringing date	/ /	Registration No.	
Odometer readout	km miles	Frame number	
Trouble occurrence date	/ /	Registration year	/ /
Weather	• Clear • Cloudy • Rainy • Snowy • Other:		
Temperature	°C (°F)		

Road condition	• Flat road • Uphill • Downhill • Unpaved road • Other:
Vehicle operation	• Start • Idling • Driving ·Constant speed ·Accelerating ·Decelerating ·Turning ·Other:
Details of trouble	
Behavior of the airbag warning light	• Normal (When turning the ignition switch to ON, the light illuminates for approx. 6 seconds, then goes off.) • The light is stuck on. • The light does not illuminate.
Operation of passenger's airbag ON/ OFF indicator light	• Normal (When turning the ignition switch to ON, the light illuminates for approx. 6 seconds, then goes off for 2 seconds. Then ON (adult) or OFF (child, not seated) illuminates.) • The light is stuck on. • The light does not illuminate.
DTC output	Normal code DTC: (code:)

Checking / clearing diagnostic codes

1. Reading diagnostic codes with the SSM4
   (1) Connect the SSM4 to data link connector.
   (2) Turn the ignition switch to ON.
   (3) Select the following menu items using the SSM4. : [Each System] / [Occupant Detection] / [DTC]

NOTE:

For details on the DTCs, refer to "List of diagnostic codes".

2. Clearing diagnostic codes with the SSM4
   (1) Connect the SSM4 to data link connector.
   (2) Turn the ignition switch to ON.
   (3) Select the following menu items using the SSM4. : [Each System] / [Occupant Detection] / [Clear Memory]

NOTE:

After repairing the airbag system and, the occupant detection system, clear the failure codes recorded in the airbag control module and the occupant detection control module.

3. Check mode
   Refer to the trouble situation on the interview check list to reproduce the same situation.

ECM terminal arrangement

CAUTION:

The occupant detection control module, occupant detection sensor and the seat frame are handled as one unit, so never attempt to remove them.

1. Connector between the airbag rear harness and the seat harness.

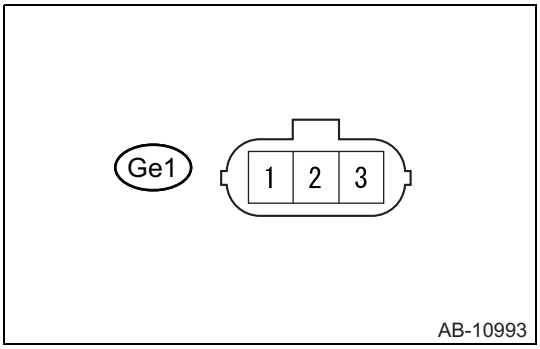

Terminal No. (symbol)	Terminal description	Conditions	Specified condition
Ge1-2 - Ge1-3	Airbag sensor ASSY communication line	IG ON	Pulse generation
Ge1-1 - chassis ground	Power supply	IG ON	11 to 14V

2. Occupant detection control module

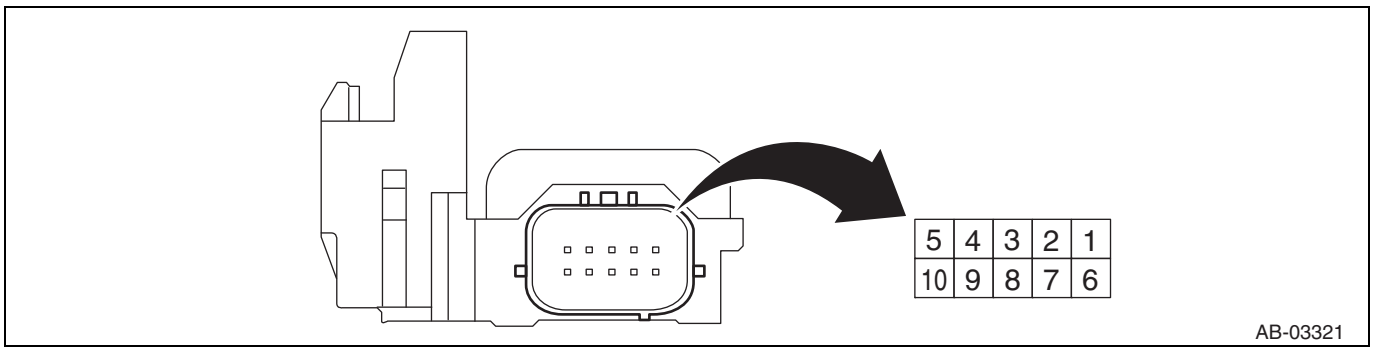

Terminal No. (symbol)	Terminal description	Input/output value	Reference
1	Airbag CM communication (+)	-	Communication line
2	Not used	-	-
3	Not used	-	-
4	Buckle switch (-)	0V	Switch ground
5	Not used	-	-
6	IG power supply	8 - 16V	IG ON
7	Not used	-	-
8	Buckle switch (+)	0 - IG voltage	IG voltage when SW ON
9	Airbag CM communication (-)	0V	GND
10	Not used	-	-

Wiring diagram

Refer to wiring diagram.

Data monitor

Data list

Check the operation status of each sensor when the malfunction of the seat belt buckle switch occurs or when replacing it.

1. Turn the ignition switch to OFF.
2. Connect the SSM4 to the DLC3.
3. Turn the ignition switch to ON.
4. Turn on the SSM4.
5. Select the following menu items: [Occupant Detection] / [Data monitor]
6. Check the values referring to the list below.

Item	Contents	Reference
Trip Count	-	-

RS

Item	Contents	Reference
Counter	-	-
Time Count	-	-
Buckle SW	OFF/ON	[ON]: When passenger's seat belt is fastened. [OFF]: When passenger's seat belt is not fastened.
Passenger Occupant Status	Adult or Child/Empty or Child	[Adult or Child] when the seat is occupied, and when the seat is not occupied or child seat is equipped. "Empty or Child"
Passenger Airbag Status	-	-

Airbag warning light illumination pattern

1. Inspection

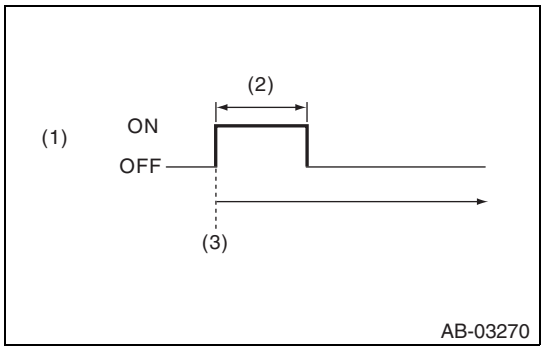

(1) Turn the ignition switch to ON. Confirm that the airbag warning light turns on and remains on for approx. 6 seconds, and then turns off even though the switch is still set to ON.

Captions in illustration

*1	Airbag warning light
*2	For Approx. 6 seconds
*3	Ignition switch ON

Illumination pattern for passenger's airbag ON / OFF indicator light

1. Inspection

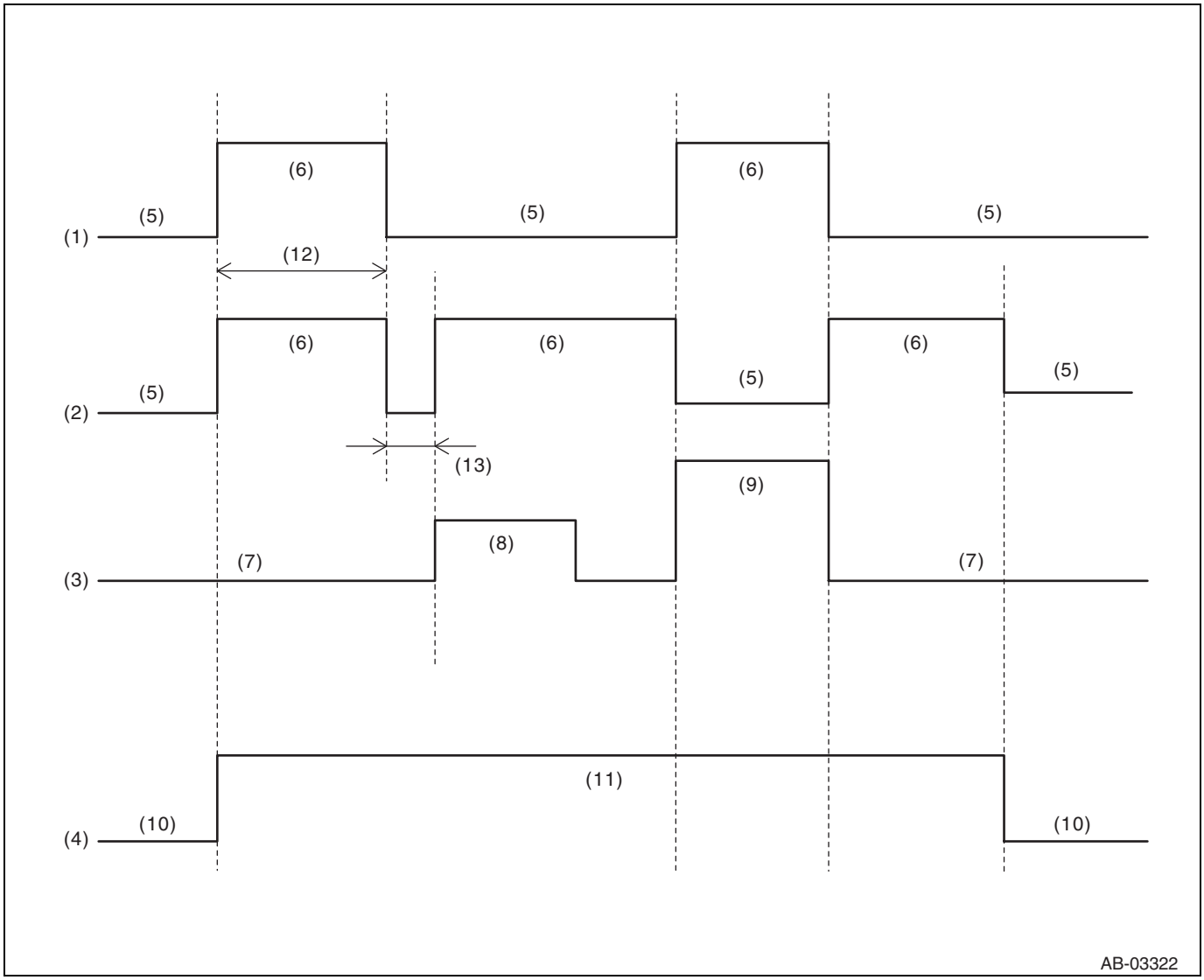

Captions in illustration

(1)	Passenger's airbag ON indicator light	(6)	ON	(10)	OFF
(2)	Passenger's airbag OFF indicator light	(7)	Not occupied	(11)	ON
(3)	Occupation status of the passenger's seat	(8)	CRS with a child of age 1*1	(12)	Approx. 6 seconds
(4)	Ignition Switch	(9)	Adult*1	(13)	Approx. 2 seconds
(5)	OFF				

CRS: Child restraint system

*1: [ON] or [OFF] for a children

RS

DTC	B1650	Occupant classification system malfunction

Circuit description

DTC No.	DTC detected item	Faulty part
B1650	• Airbag control module receives the informative signal for short-circuited line, open circuit signal, short to ground signal, or short to B+ signal in occupant detection system circuit. • Occupant detection system is faulty. • Airbag control module is faulty.	• Occupant detection system • Airbag control module • Airbag rear harness

Circuit figure

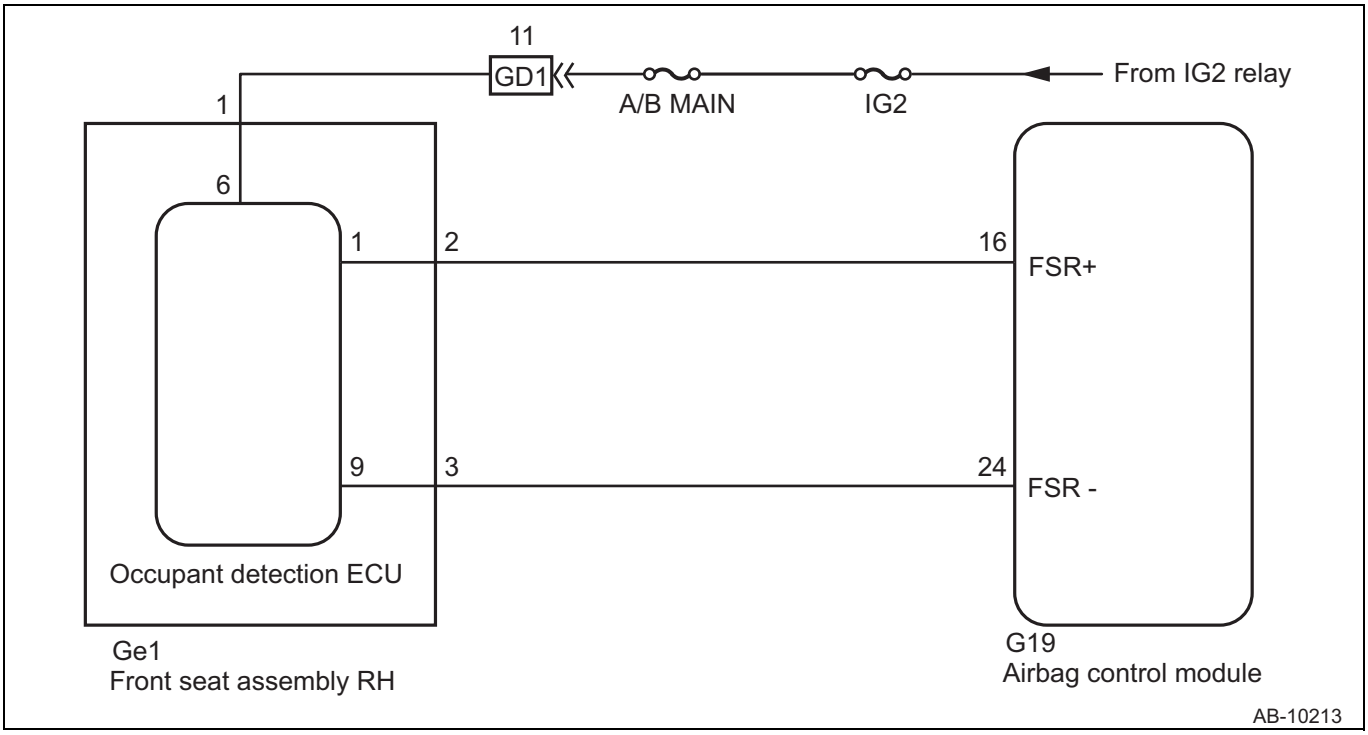

RS

Inspection steps

CAUTION:

Before performing the diagnosis, refer to the precautions.

1	Check DTC

(1) Read the diagnostic codes in the occupant detection system

Criteria: No other DTC is detected.

NG → Perform diagnosis for the displayed DTC.

OK

2	Check poor contact of connectors.

(1) Check for poor contact of the connectors between the occupant detection control module and the airbag control module.

Criteria: No fault is found.

NG → Reconnect the connector. In the case that the fault cannot be corrected, replace the airbag rear harness along with the body harness, or replace the front seat cushion ASSY RH.

OK

3	Check airbag rear harness

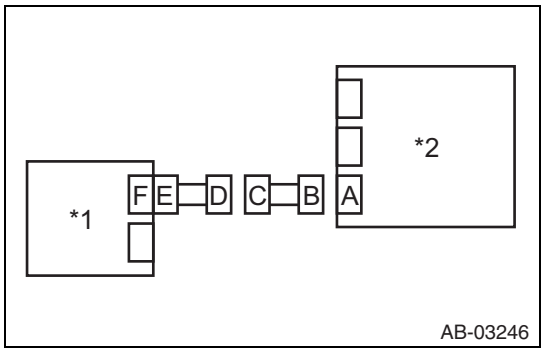

(1) Turn the ignition switch to OFF, disconnect the battery ground terminal, and wait for 60 seconds or more.
(2) Disconnect the connector (Ge1) under the passenger's seat.
(3) Disconnect the connector (D27, G19, H32) from the airbag control module, and connect the connector (1AG) in the test harness AG.
(4) Measure the resistance between the terminals.
NOTE:
Connect the test harness AS to the connector (Ge1) and touch the test harness with the tester.

Resistance

Inspection terminals	Inspection conditions	Standard value
(Ge1) No. 2 - (6AG) No. 9	Always	Less than 10 Ω
(Ge1) No. 3 - (6AG) No. 11	Always	Less than 10 Ω

Captions in illustration

*1	Occupant detection control module
*2	Airbag control module

Criteria: DTC B1650 is not displayed.

NG → Replace the airbag rear harness along with the body harness.

OK

4	Check airbag rear harness

(1) Measure the resistance between the terminals.

Resistance

Inspection terminals	Inspection conditions	Standard value
(6AG) No. 9 - chassis ground	Always	1 MΩ or more
(6AG) No. 11 - chassis ground	Always	1 MΩ or more
(6AG) No. 9 - (6AG) No. 11	Always	1 MΩ or more

NG → Replace the airbag rear harness along with the body harness.

OK

5	Check occupant detection harness

(1) Turn the ignition switch to ON.

RS

(2) Measure the voltage between the terminals.
Voltage

Inspection terminals	Inspection conditions	Standard value
(Ge1) No. 1 - chassis ground	IG ON	10 V or more

NG → Replace the front seat cushion ASSY RH

OK

Check the battery voltage and the fuses. If there is no fault, replace the airbag rear harness along with the body harness.

DTC	B1655	Front Buckle Switch RH Failure

Circuit description

DTC No.	DTC detected item	Faulty part
B1655	• Airbag control module receives the informative signal for short-circuited line, open circuit signal, short to ground signal, or short to B+ signal in the seat belt buckle switch RH circuit. • Front seat inner belt ASSY RH is faulty. • Occupant detection system is faulty. • Airbag control module is faulty.	• Occupant detection system • Airbag control module • Front seat inner belt ASSY RH (seat belt buckle switch RH)

RS

Circuit figure

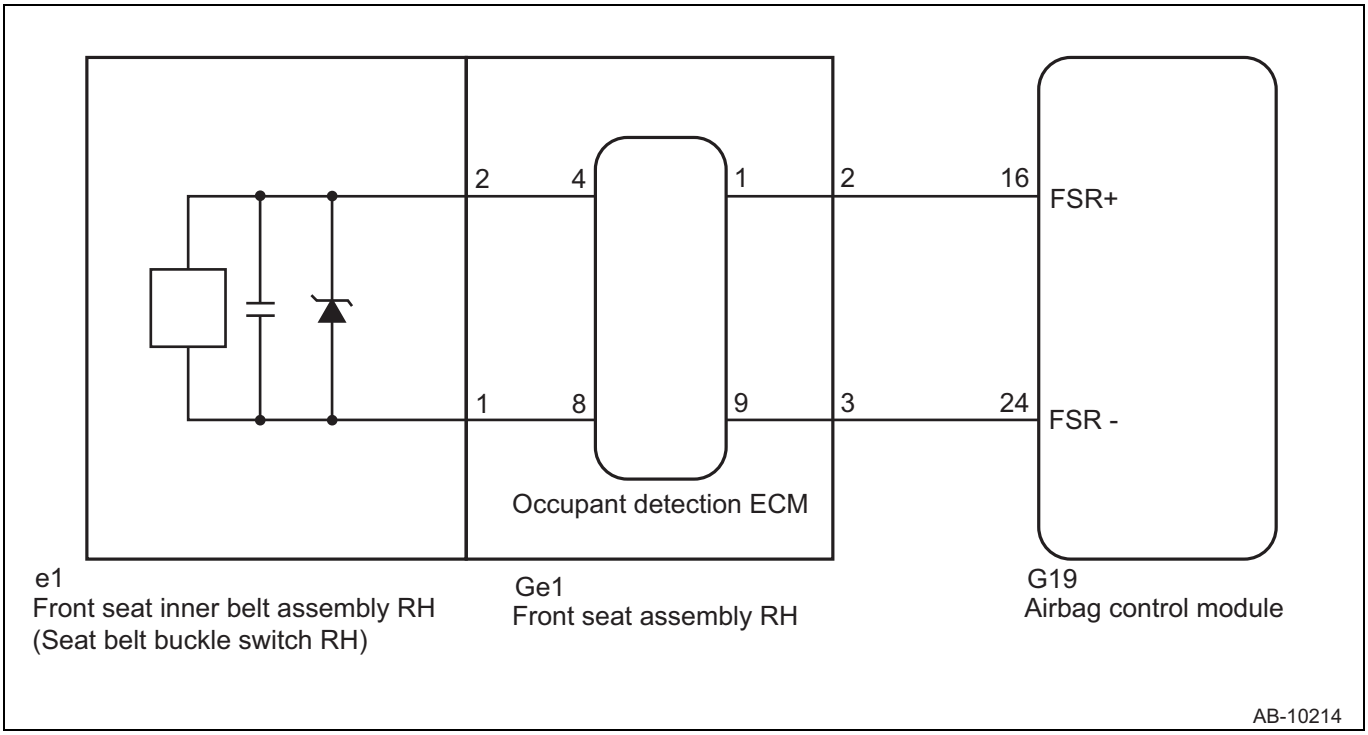

Inspection steps
CAUTION:
Before performing the diagnosis, refer to the precautions.

1	Check DTC

(1) Read the diagnostic codes in the occupant detection system
Criteria: No other DTC is detected.

NG → Perform diagnosis for the displayed DTC.

OK

2	Check poor contact of connectors.

(1) Check for poor contact of the connectors between the occupant detection control module and the airbag control module.
Criteria: No fault is found.

NG → Reconnect the connector. In the case that the fault cannot be corrected, replace the airbag rear harness along with the body harness, or replace the front seat cushion ASSY RH.

OK

3	Inspection of the buckle switch

(1) Turn the ignition switch to OFF, disconnect the battery ground terminal, and wait for 60 seconds or more.
(2) Disconnect the buckle switch connector.
(3) Connect the test harness AE and the test harness connector Y to the buckle switch connector (e1).
(4) Connect the battery ground terminal and turn the ignition switch to ON.
Criteria: The airbag warning light illuminates for 6 seconds, then it goes off.

NG → Check the seat harness, and if any fault is found, repair the harness. In the case that the fault cannot be corrected, replace the front seat ASSY RH.

OK

Replace the front seat inner belt ASSY RH (seat belt buckle switch RH).

DTC	B1760	Sensor mat abnormal

Circuit description
The occupant detection sensor circuit consists of the occupant detection ECM and the occupant detection sensor.
If any fault is detected in the occupant detection sensor circuit, the diagnostic code B1760 will be recorded.

DTC No.	DTC detected item	Faulty part
B1760	• Occupant detection ECM receives the informative signal for short-circuited line, open circuit signal, short to ground signal, or short to B+ signal in occupant detection sensor circuit. • Occupant detection sensor is faulty. • Occupant detection ECM is faulty.	• Front seat ASSY RH • Front seat cushion ASSY RH

Inspection steps

1	Check poor contact of connectors.

(1) Turn the ignition switch to OFF.
(2) Disconnect the cable from the battery ground terminal.
(3) Check that the connector is securely connected to the occupant detection ECM.
Criteria: The connector is securely connected.
NOTE:
If the connector is found loose, reconnect it, and then proceed to the next inspection.
(4) Disconnect the connector from the occupant detection ECM.
(5) Check that the connector terminal is intact.
Criteria: The terminal is not deformed or damaged.

NG → Replace the front seat cushion ASSY RH

RS

OK

Repair the connector. In case that the fault cannot be corrected, replace the front seat cushion ASSY RH.

DTC B1761 Sensor mat liquid coating abnormal

Circuit description
DTC B1761 is detected when the occupant detection sensor is wet.

DTC No.	DTC detected item	Faulty part
B1761	• Occupant detection sensor is wet. • Occupant detection sensor is faulty. • Occupant detection ECM is faulty.	• Front seat ASSY RH • Front seat cushion ASSY RH

Inspection steps

1	Dry front seat ASSY RH.

(1) Leave the vehicle with the windows open in a well-ventilated room for 24 hours to dry the seats.

Next

2	Checking diagnostic codes

(1) Clear the diagnostic code recorded in the occupant detection ECM. (Refer to RS - 234)
(2) Clear the diagnostic code recorded in the airbag sensor ASSY. (Refer to RS - 51)
(3) Turn the ignition switch to OFF.
(4) Turn the ignition switch to ON.
(5) Check whether a diagnostic code is recorded or not. (Refer to RS - 234)
Criteria: The diagnostic code B1761 is not output.
NOTE:
At this point, any diagnostic codes other than B1761 may be output. However, these codes are not related to this check.

NG → Replace the front seat cushion ASSY RH

OK

Complete

DTC	B1771	Buckle switch malfunction

Circuit description
The passenger's seat buckle switch circuit consists of the occupant detection ECM and the front seat inner belt ASSY RH.
If any fault is found in the passenger's seat buckle switch circuit, the diagnostic code B1771 will be recorded.

DTC No.	DTC detected item	Faulty part
B1771	• Occupant detection ECM receives the informative signal for short-circuited line, open circuit signal, short to ground signal, or short to B+ signal in the passenger's seat buckle switch circuit. • Passenger's seat buckle switch is faulty. • Occupant detection ECM is faulty.	• Front seat inner belt ASSY RH (passenger's buckle switch) • Front seat ASSY RH • Front seat cushion ASSY RH

NOTE:
In case that the diagnostic code B1650 is detected as a result of troubleshooting of the air bag system, check the diagnostic code recorded in the occupant detection ECM. In case that the diagnostic code B1771 is output, perform the troubleshooting procedures for this diagnostic code.

RS

Circuit figure

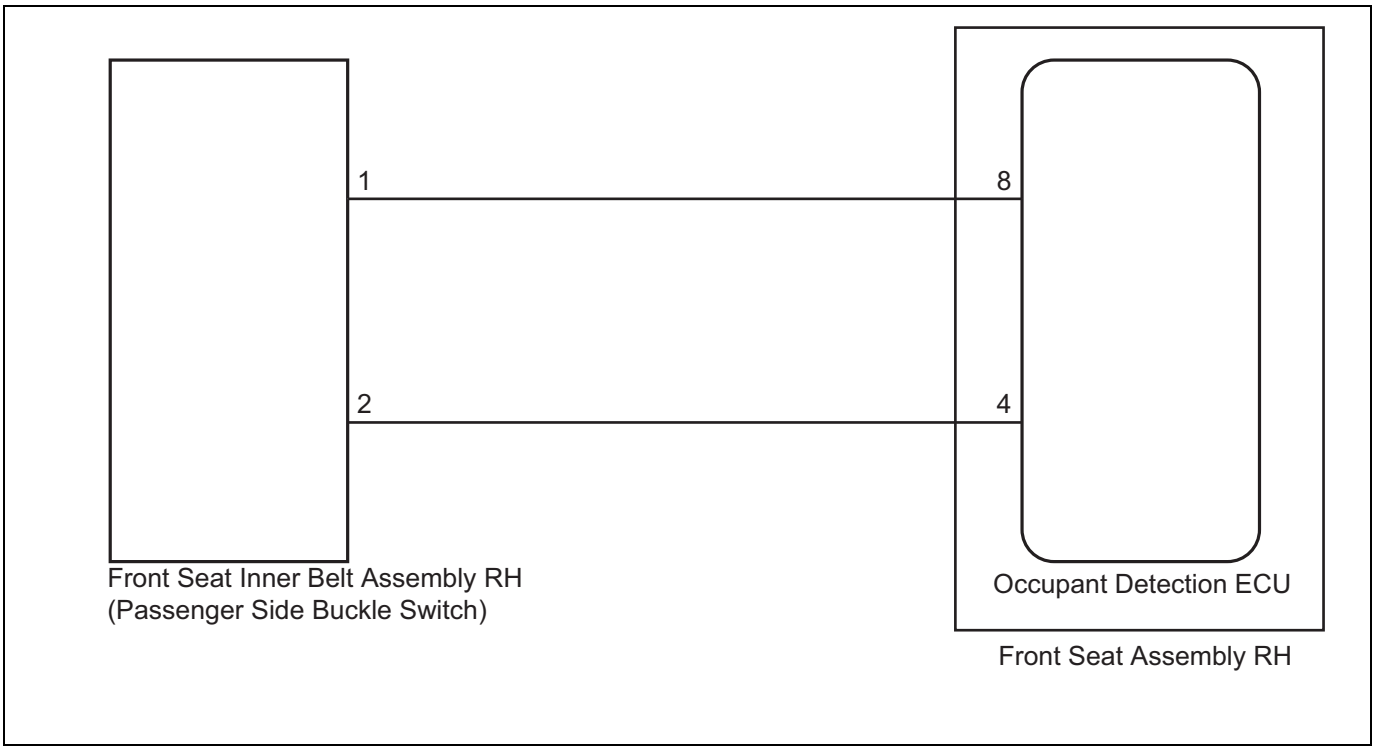

Inspection steps

RS

Perform the diagnosis starting from the step 2 of "DTC B1655 Front Buckle Switch RH Failure".

DTC	B1795	ECM internal circuit fault

Circuit description

If any fault is detected in the occupant detection ECM, the diagnostic code B1795 will be recorded.

DTC No.	DTC detected item	Faulty part
B1795	Occupant detection ECM is faulty.	• Front seat ASSY RH • Front seat cushion ASSY RH

NOTE:

In case that the diagnostic code B1650 is detected as a result of troubleshooting of the air bag system, check the diagnostic code recorded in the occupant detection ECM. In case that the diagnostic code B1795 is output, perform the troubleshooting procedures for this diagnostic code.

Inspection steps

CAUTION:

After turning the ignition switch to OFF, you may have to wait for a while before disconnecting the battery terminals. Check appropriate precautions for battery terminal disconnection before proceeding.

1	Replace the front seat cushion ASSY RH

(1) Turn the ignition switch to OFF.
(2) Disconnect the cable from the battery ground terminal.
(3) Replace the front seat inner belt ASSY RH.
(4) Connect the cable to the battery ground terminal.

Next

Complete

Driver side air bag module

Exploded view

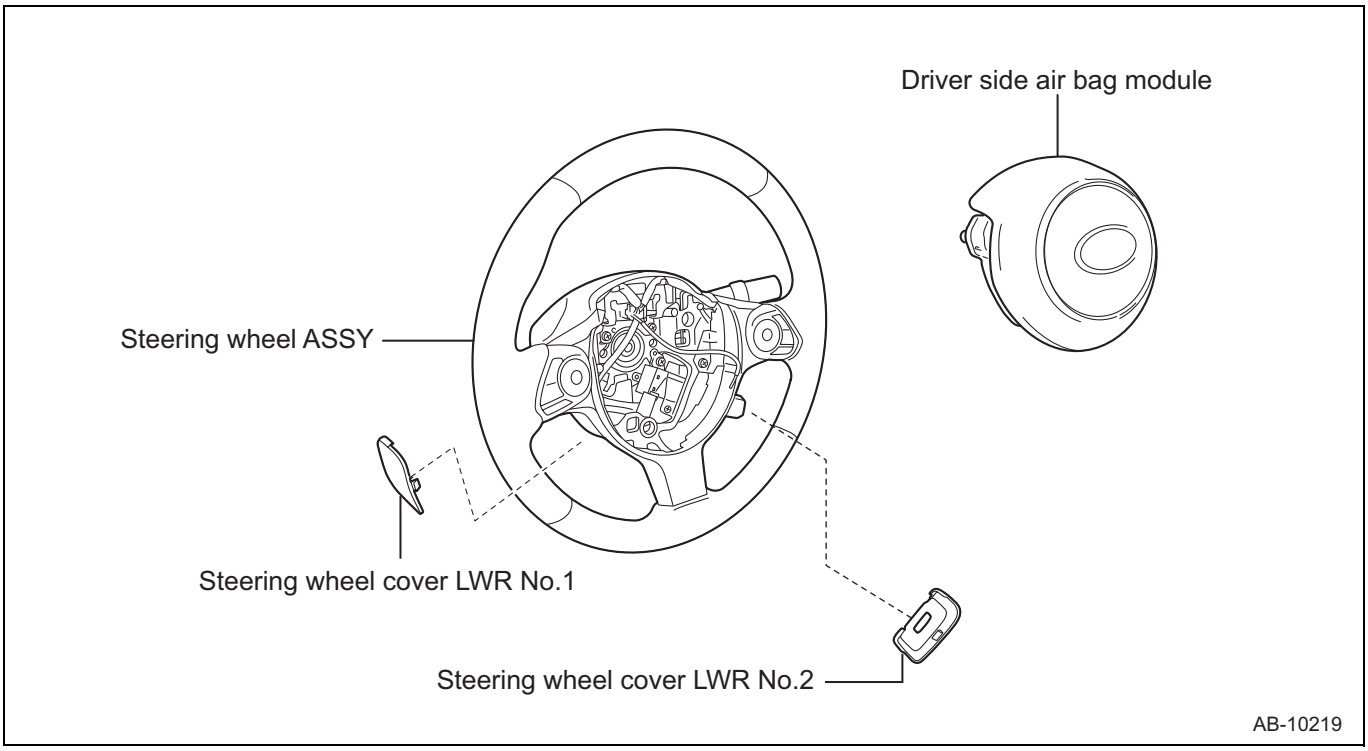

RS

Removal

WARNING:
The following service operations include the works which may affect the SRS airbag system. Before starting work, always be sure to confirm the precautions related to the SRS airbag system. (Refer to RS - 5)

1. Precautions
   CAUTION:
   After turning the ignition switch to OFF, you may have to wait for a while before disconnecting the battery terminals. Check appropriate precautions for battery terminal disconnection before proceeding. (Refer to IN - 6)
2. Disconnection of the battery ground terminal
   (1) Turn the ignition switch to OFF, disconnect the battery ground terminal, and then wait for 60 seconds before starting the work. (Refer to IN - 6)
   WARNING:
   The air bag and pretensioner system are fitted with a backup power supply. If you start the work within 60 seconds after disconnecting the battery ground terminal, the air bag may be activated.
   CAUTION:
   To avoid damage to the molding, be sure to fully open the door glasses on both driver's and passenger's sides.
3. Removal of the driver's airbag module
   WARNING:
   When storing a removed driver's airbag module, even if it is a temporary storage, be sure to place the airbag module with the deploying side facing upward.
   (1) Check that the ignition switch is turned to OFF.
   (2) Check that the battery ground terminal is disconnected.
   WARNING:
   After disconnecting the battery ground terminal, do not start the work before waiting for 60 seconds.

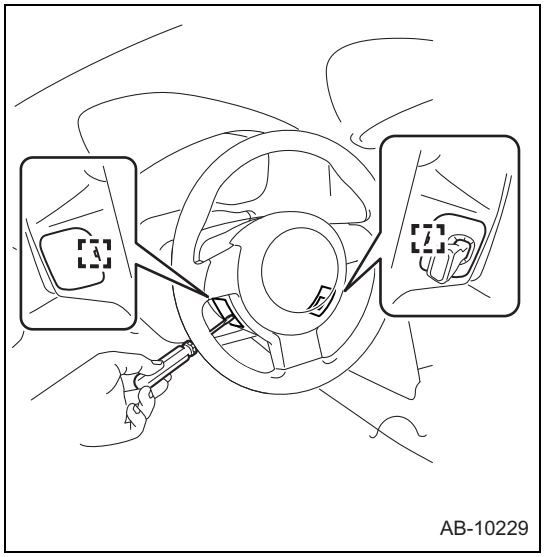

(3) Remove the steering wheel cover LWR No. 1 and No. 2 using a thin flat tip screwdriver wrapped with protective tape.

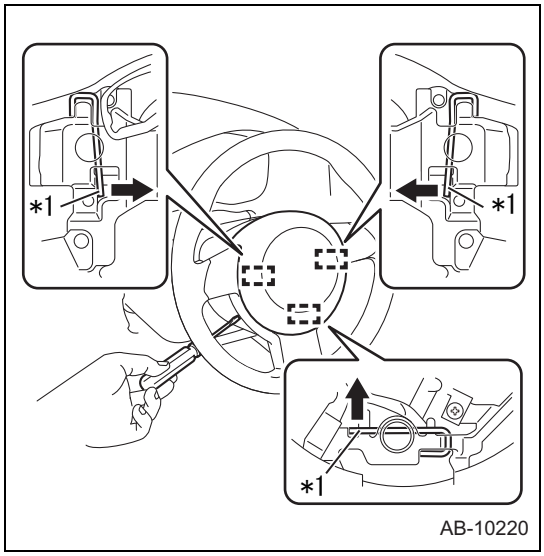

(4) Using a flat tip screwdriver, push 3 torsion springs, then release 3 pins.
CAUTION:
Be careful not to drop the driver's airbag module.

Captions in illustration

*1	Torsion spring

(5) Pull out the driver's airbag module toward the rear side of the vehicle.
CAUTION:
When pulling out the driver's airbag module, be careful not to pull the wiring.

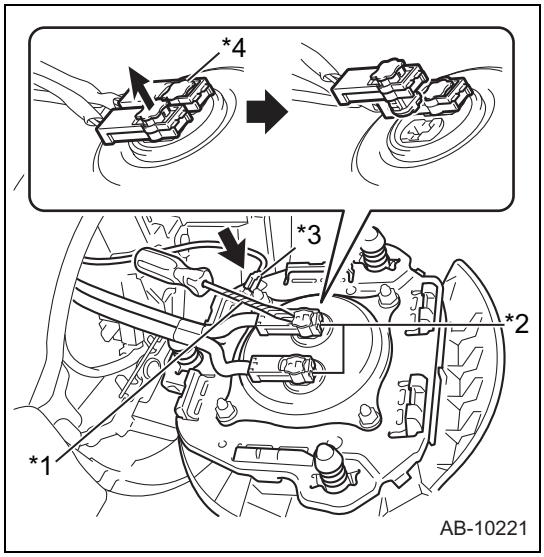

(6) Disconnect the horn connector.

Captions in illustration

*1	Protective tape
*2	Airbag connector
*3	Horn connector
*4	Unlock it.

(7) Using the fine flat tip screwdriver wrapped with protective tape, pull up the lock of the two airbag connectors to unlock it.

RS

(8) Using the fine flat tip screwdriver wrapped with protective tape, disconnect the airbag connector and remove the driver's airbag module.

Installation

WARNING:
The following service operations include the works which may affect the SRS airbag system. Before starting work, always be sure to confirm the precautions related to the SRS airbag system. (Refer to RS - 5)
CAUTION:
Do not allow the harnesses and the connectors to interfere or get tangled with other parts.

1. Installation of the driver's airbag module
   (1) Before installation, inspect the following items and replace any faulty part with a new one.
   - Airbag module is cracked or deformed.
   - Harness and/or connector is cracked, deformed or broken.
   - Harness wire is exposed.
   - The condition of the steering wheel makes the installation of the airbag module difficult.
   - The clearance between the driver's airbag module and the steering wheel is not constant.

   (2) Check that the ignition switch is turned to OFF.
   (3) Check that the battery ground terminal is disconnected.
   WARNING:
   After disconnecting the battery ground terminal, do not start the work before waiting for 60 seconds.

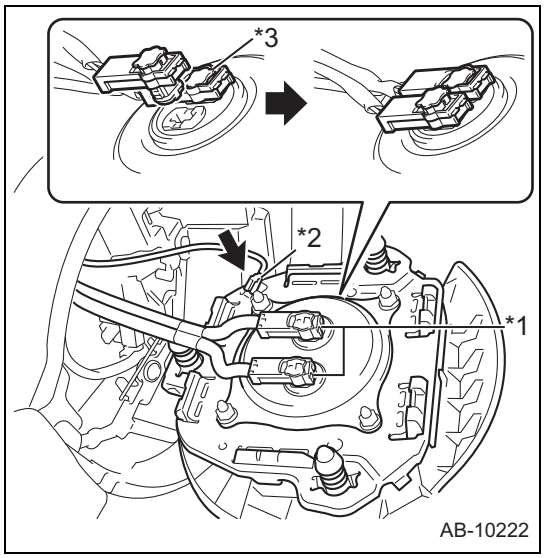

(4) Connect the two airbag connectors to the driver's airbag module.

Captions in illustration

*1	Airbag connector
*2	Horn connector
*3	Push and lock it.

(5) Push in the lock of the airbag connector.
CAUTION:
Lock it securely.

(6) Connect the horn connector to the driver's airbag module.

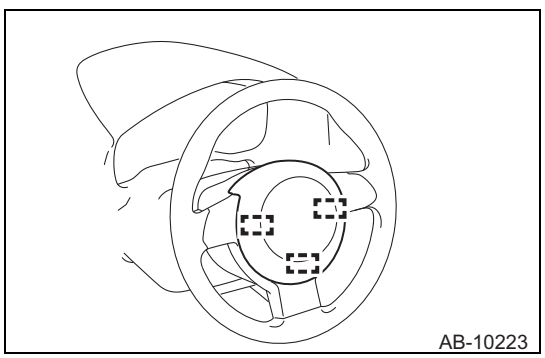

(7) Push in the driver's airbag module and engage 3 pins to install the driver's airbag module to the steering wheel ASSY.
CAUTION:
- Securely insert the pins to the attachment holes of the steering wheel ASSY.
- Check that the driver's airbag module is securely installed.

2. Installation of the steering wheel cover LWR No. 1 and No. 2
3. Connection of the battery ground terminal
Standard value:T=6.0N·m {61kgf·cm} {4.4ft·lbf}

4. Inspection of the driver's airbag module
   (1) Check that the horn sounds.
5. Inspection of airbag warning light (Refer to RS - 53)

Steering roll connector

Exploded view

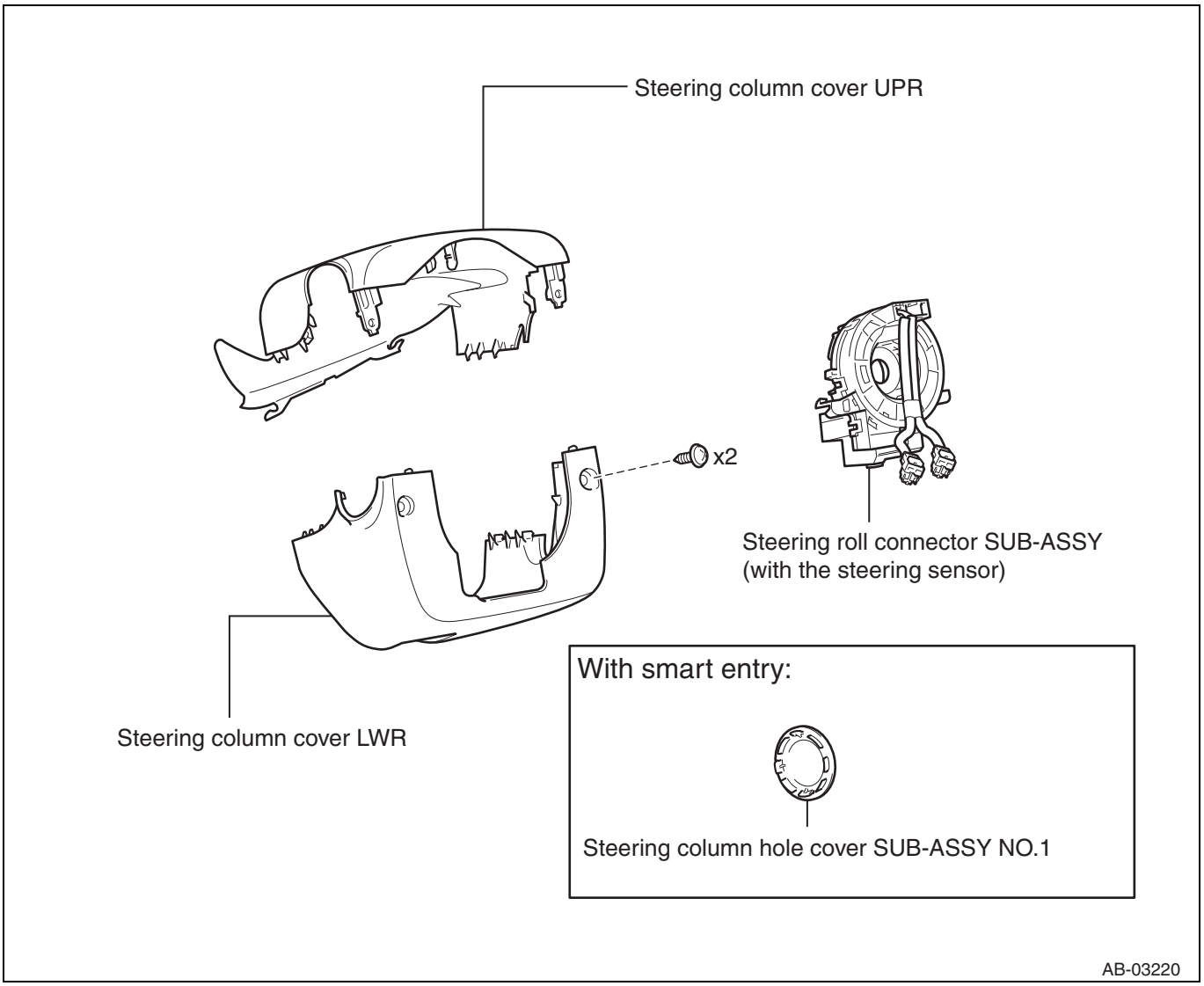

RS

Removal

WARNING:

The following service operations include the works which may affect the SRS airbag system. Before starting work, always be sure to confirm the precautions related to the SRS airbag system. (Refer to RS - 5)

1. Confirmation of front tires in the straight-ahead position
2. Precautions
   CAUTION:
   After turning the ignition switch to OFF, you may have to wait for a while before disconnecting the battery terminals. Check appropriate precautions for battery terminal disconnection before proceeding. (Refer to IN - 6)
3. Disconnection of the battery ground terminal
   (1) Turn the ignition switch to OFF, disconnect the battery ground terminal, and then wait for 60 seconds before starting the work. (Refer to IN - 6)
   WARNING:
   The air bag and pretensioner system are fitted with a backup power supply. If you start the work within 60 seconds after disconnecting the battery ground terminal, the air bag may be activated.
   CAUTION:
   To avoid damage to the molding, be sure to fully open the door glasses on both driver's and passenger's sides.
4. Removal of the steering wheel ASSY (Refer to SR - 67)
5. Removal of the steering column cover support (with smart entry) (Refer to SR - 54)

6. Removal of the steering column cover LWR (Refer to SR - 54)
7. Removal of the steering column cover UPR (Refer to SR - 55)
8. Removal of the steering roll connector SUB-ASSY (with the steering sensor)
   CAUTION:
   - Do not replace the steering roll connector when the ignition switch is turned to ON and the battery is connected.
   - Do not rotate the steering roll connector when the ignition switch is turned to ON and the battery is connected.
   - When the steering sensor is rotated for its operation check (noise check, diagnosis, etc.), make sure to confirm the vehicle is in the straight-ahead position, then perform the check with the steering wheel installed.

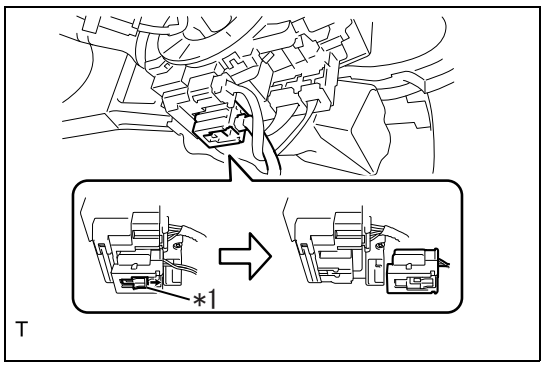

(1) Slide the slider to disconnect the airbag connector from the steering roll connector SUB-ASSY (with the steering sensor).

Captions in illustration

*1	Slider

(2) Disconnect each connector from the steering roll connector SUB-ASSY (with the steering sensor).

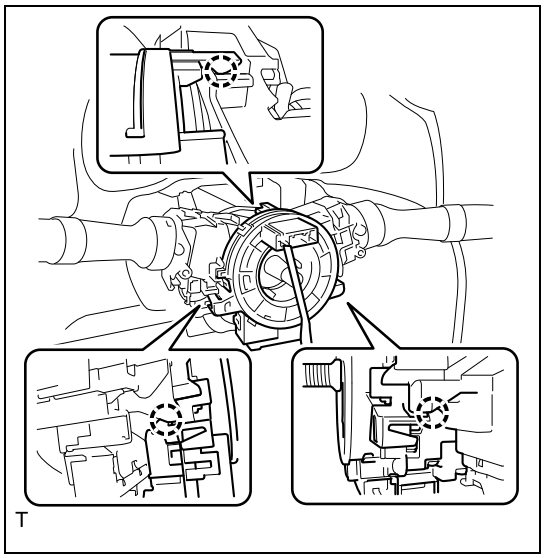

(3) Release 3 claws, and remove the steering roll connector SUB-ASSY (with the steering sensor).

9. Removal of the steering roll connector
   CAUTION:
   - Remove the steering roll connector only when replacing itself or the steering sensor.
   - Do not rotate the center part of the steering sensor, because it may displace the neutral position of the steering sensor.

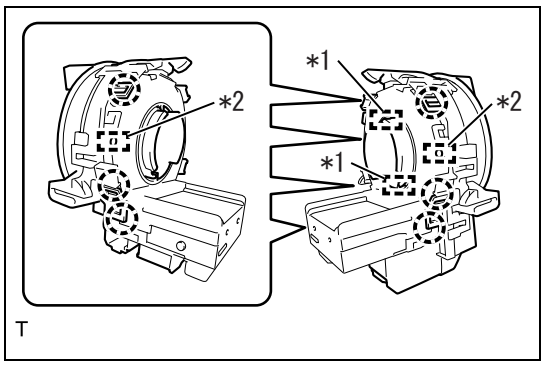

(1) Release 6 claws and 2 pins, and remove the steering roll connector from the steering sensor.
   CAUTION:
   - Do not damage the guide.
   - Do not damage the claws of the steering sensor.

Captions in illustration

*1	Guide
*2	Pin

Inspection

1. Inspection of the steering roll connector SUB-ASSY (with the steering sensor)
   (1) When the following conditions are found, replace the steering roll connector SUB-ASSY (with the steering sensor) with a new one.
   Criteria
   - There are scratches, cracks, or damages in the connector.
   - There are cracked, dented, or chipped parts.
   - When rotating the connector, it does not move smoothly and makes noise.
   - The connector can not be centered.

Installation

WARNING:
The following service operations include the works which may affect the SRS airbag system. Before starting work, always be sure to confirm the precautions related to the SRS airbag system. (Refer to RS - 5)

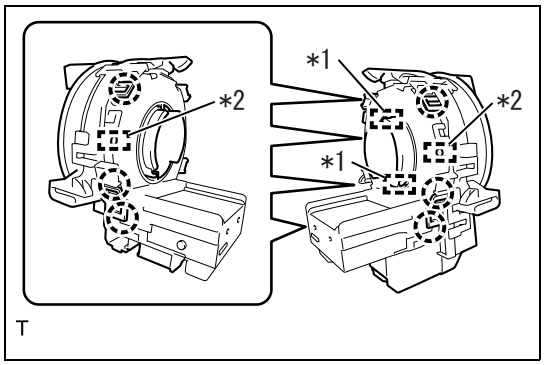

1. Installation of the steering roll connector
   (1) Align 2 pins and 2 guides.

Captions in illustration

*1	Guide
*2	Pin

   (2) Engage 6 claws to install the steering roll connector to the steering sensor.
   CAUTION:
   Do not rotate the steering sensor until the steering roll connector is installed to the steering sensor.

RS

2. Installation of the steering roll connector SUB-ASSY (with the steering sensor)
   CAUTION:
   - Do not replace the steering roll connector when the ignition switch is turned to ON and the battery ground terminal is connected.
   - Do not rotate the steering roll connector when the ignition switch is turned to ON and the battery ground terminal is connected.
   - When the steering sensor is rotated for its operation check (noise check, diagnosis, etc.), make sure to confirm the vehicle is in the straight-ahead position, then perform the check with the steering wheel installed.

   NOTE:
   When the steering roll connector SUB-ASSY (with the steering sensor) is to be replaced with a new one, do not pull off the lock pin of the steering roll connector at this point.
   (1) Put the turn signal switch in the neutral position.
   CAUTION:
   Make sure to put the turn signal switch in the neutral position. Otherwise, the pin of this switch may be broken.
   (2) Engage 3 claws to install the steering roll connector SUB-ASSY (with the steering sensor).
   (3) Connect each connector to the steering roll connector SUB-ASSY (with the steering sensor).
3. Installation of the steering column cover UPR (Refer to SR - 63)
4. Installation of the steering column cover LWR (Refer to SR - 63)
5. Installation of the steering column cover support (with smart entry) (Refer to SR - 63)
6. Confirmation of front tires in the straight-ahead position
7. Centering adjustment of the steering roll connector
   CAUTION:
   Do not rotate the steering roll connector when the ignition switch is turned to ON and the battery ground terminal is connected.
   (1) If the steering roll connector SUB-ASSY (with the steering sensor) is replaced with a new one, remove the lock pin of the steering roll connector.
   (2) Check that the ignition switch is turned to OFF.
   (3) Check that the battery ground terminal is disconnected.
   CAUTION:
   After disconnecting the battery ground terminal, do not start the work before waiting for 60 seconds.

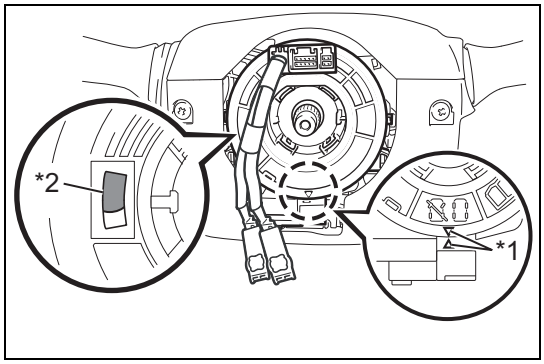

(4) Confirm that the steering roll connector SUB-ASSY (with the steering sensor) is in its central position.

Captions in illustration

*1	Alignment marks
*2	Colored part

NOTE:
When the steering roll connector SUB-ASSY (with the steering sensor) is in its central position, the alignment marks are aligned and the colored part is visible as shown in the figure.

(5) If the steering roll connector SUB-ASSY (with the steering sensor) is not in its central position, perform the centering adjustment of the steering roll connector SUB-ASSY (with the steering sensor).

CAUTION:

- Do not rotate the steering roll connector SUB-ASSY (with the steering sensor) when the ignition switch is turned to ON and the battery is connected.
- Rotate the steering roll connector SUB-ASSY (with the steering sensor) softly without applying force, to prevent the connector internal wire from being broken.
- Do not rotate the steering roll connector SUB-ASSY (with the steering sensor) holding the connector and the wiring of the airbag.
- Do not rotate the steering roll connector SUB-ASSY (with the steering sensor) to more than the specified number of turns. It may break the roll connector internal wire.

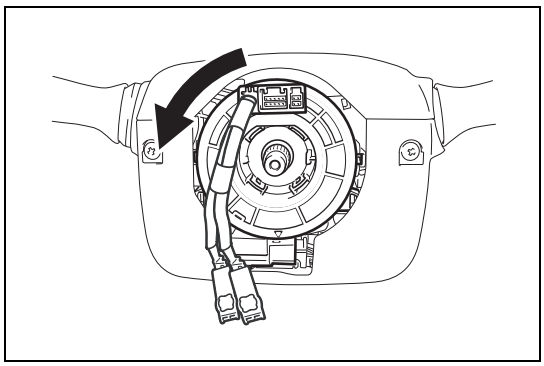

(a)Rotate slowly the steering roll connector SUB-ASSY (with the steering sensor) counterclockwise until it is locked.

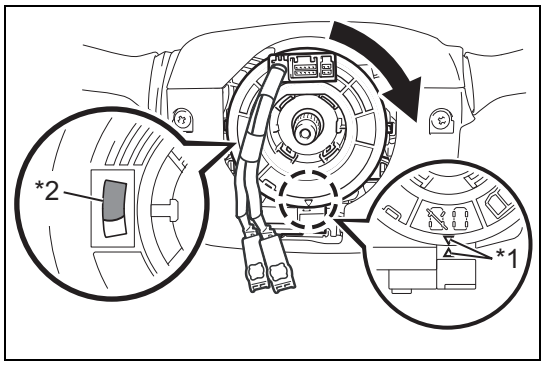

(b)Rotate the steering roll connector SUB-ASSY (with the steering sensor) clockwise to 2.5 turns from the lock position, until the alignment marks are aligned and the colored part becomes visible.

Captions in illustration

*1	Alignment marks
*2	Colored part

NOTE:

- The steering roll connector can be rotated to approximately 5 turns at the maximum.
- If the steering connector can not be centered, it is possible that the connector internal wire is broken. In this case, replace the steering roll connector and the steering sensor with new ones.

8. Installation of the steering wheel ASSY (Refer to SR - 69)
9. Connection of the battery ground terminal
   Standard value:T=6.0N·m {61kgf·cm} {4.4ft·lbf}
10. Settings during replacement and removal/installation of the parts (Refer to IN - 10)
11. Inspection of airbag warning light (Refer to RS - 53)

Unit inspection

1. Inspection of the steering roll connector SUB-ASSY (with the steering sensor)

   CAUTION:

   - Do not rotate the roll connector to more than the specified number of turns. Otherwise, the roll connector internal wire may be broken.
   - When determining the end stop, rotate the connector slowly without applying excessive force. Applying excessive force at the end stop may break the internal wire.

   (1) Adjust the roll connector.

   (2) Set the roll connector to the central position.

   (3) Connect the test harness to the connector E.

   SST 98299SA000 (Test harness N), 98299SA040 (Test harness Q)

   (4) With the following conditions, check the resistance between the test harness connector terminals.

   - Perform the check with the roll connector in the central position (the front wheels are in the straight-ahead position).
   - Rotate the roll connector counterclockwise from the central position (the front wheels are in the straight-ahead position) to an end stop. Then, perform the check while rotating it clockwise to approximately 4.5 turns.

   SST Circuit tester

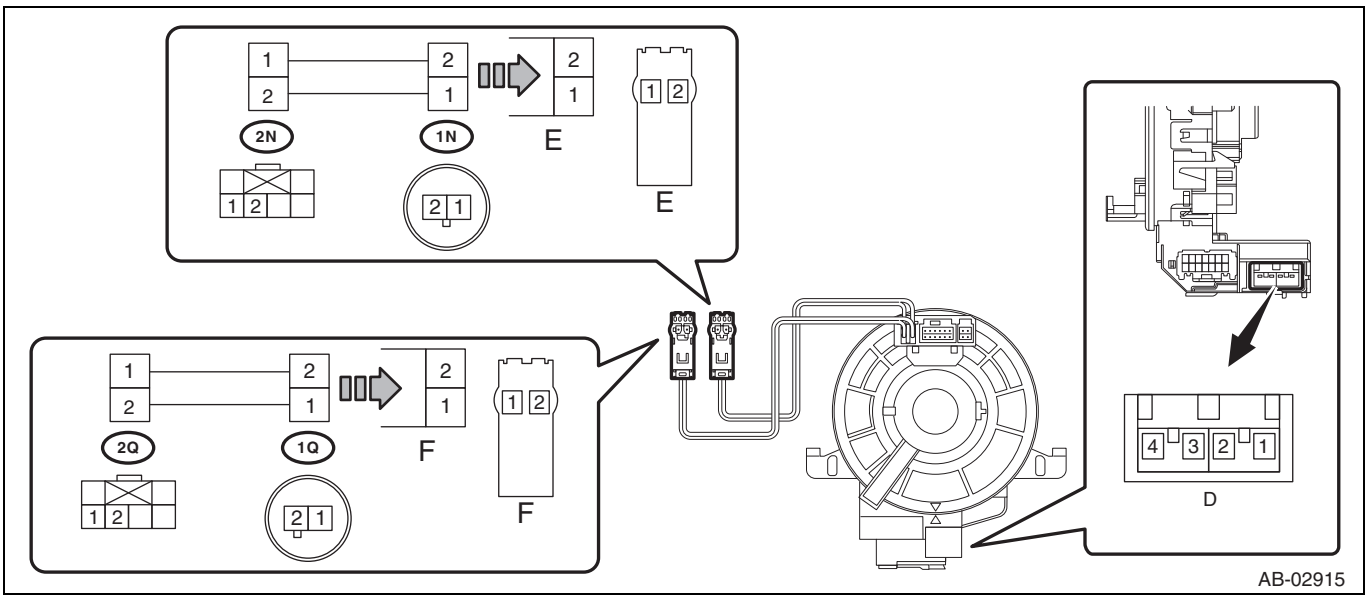

Terminal No.	Inspection conditions	Standard value
(2N) No. 1 - (2N) No. 2	Always	Less than 1 Ω
(2Q) No. 1 - (2Q) No. 2	Always	Less than 1 Ω

NOTE:

The connector D is designed to short-circuit the terminals D1, D2, D3, and D4 when disconnected.

(5) Replace the roll connector with a new part if the inspection result is not within the standard value.

Passenger's airbag module

Exploded view

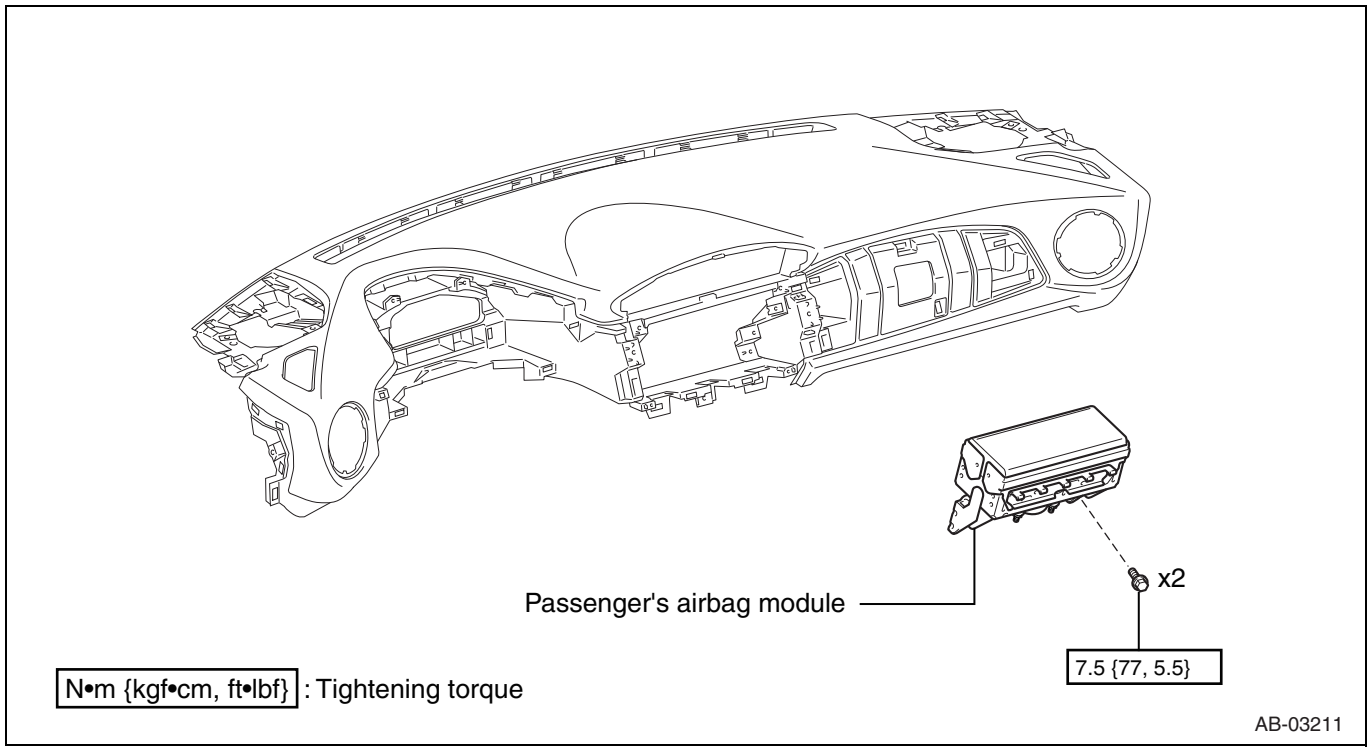

Removal

WARNING:
The following service operations include the works which may affect the SRS airbag system. Before starting work, always be sure to confirm the precautions related to the SRS airbag system. (Refer to RS - 5)

1. Precautions
   CAUTION:
   After turning the ignition switch to OFF, you may have to wait for a while before disconnecting the battery terminals. Check appropriate precautions for battery terminal disconnection before proceeding. (Refer to IN - 6)
2. Disconnection of the battery ground terminal
   (1) Turn the ignition switch to OFF, disconnect the battery ground terminal, and then wait for 60 seconds before starting the work. (Refer to IN - 6)
   WARNING:
   The air bag and pretensioner system are fitted with a backup power supply. If you start the work within 60 seconds after disconnecting the battery ground terminal, the air bag may be activated.
   CAUTION:
   To avoid damage to the molding, be sure to fully open the door glasses on both driver's and passenger's sides.
3. Removal of the instrument panel SUB-ASSY (Refer to IT - 9)

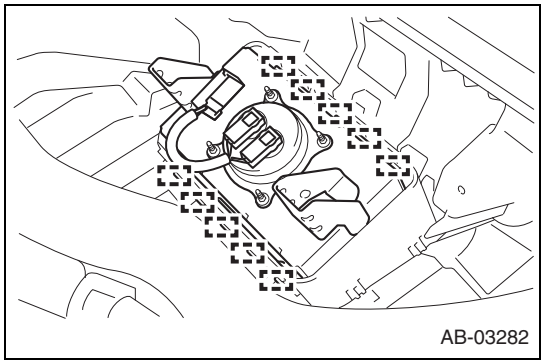

4. Removal of the passenger's airbag module
   WARNING:
   When storing a removed passenger's airbag module, even if it is a temporary storage, be sure to place the airbag module with the deploying side facing upward.
   (1) Bend the airbag door wall at the front side of the vehicle to release 5 hooks.
   (2) Release 5 hooks on the airbag door wall at the rear side of the vehicle, and remove the passenger's airbag module.

RS

Installation

WARNING:

The following service operations include the works which may affect the SRS airbag system. Before starting work, always be sure to confirm the precautions related to the SRS airbag system. (Refer to RS - 5)

CAUTION:

Do not allow the harnesses and the connectors to interfere or get tangled with other parts.

1. Installation of the passenger's airbag module
   (1) Before installation, inspect the following items and replace any faulty part with a new one.
      - Passenger's airbag lid (instrument panel surface) is cracked or deformed.
      - Airbag module is cracked or deformed.
      - Harness and/or connector is cracked, deformed or broken.
      - Harness wire is exposed.
      - Mounting bracket is cracked or deformed.
   (2) Engage 5 vehicle rear hooks on the passenger's airbag module, and install it on the vehicle rear side of the airbag door wall.
   (3) Push in the passenger's airbag module, and engage 5 vehicle front hooks with the vehicle front side of the airbag door wall.
2. Installation of the instrument panel SUB-ASSY (Refer to IT - 15)
3. Inspection of airbag warning light (Refer to RS - 53)

Curtain airbag module

Exploded view

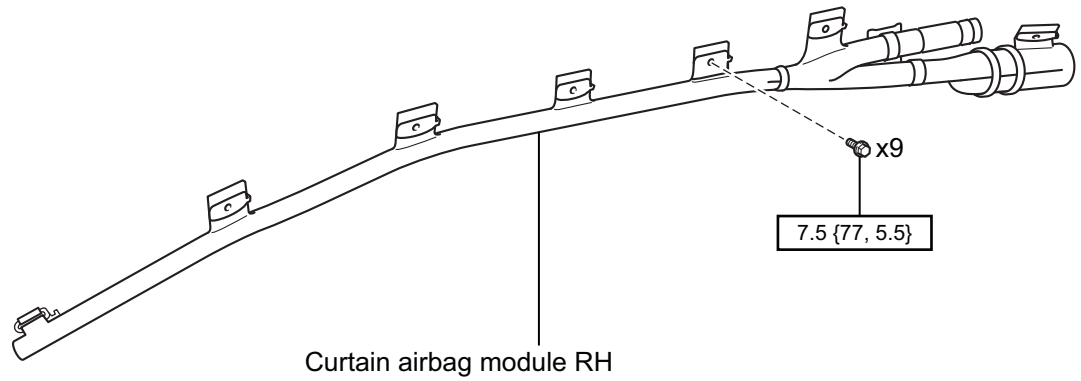

N*m {kgf*cm, ft*lbf}: Tightening torque

AB-10235

Removal

RS

WARNING:

The following service operations include the works which may affect the SRS airbag system. Before starting work, always be sure to confirm the precautions related to the SRS airbag system. (Refer to RS - 5)

NOTE:

The procedures described below are for the RH side. Perform the same procedures for the LH side.

1. Precautions
   CAUTION:
   After turning the ignition switch to OFF, you may have to wait for a while before disconnecting the battery terminals. Check appropriate precautions for battery terminal disconnection before proceeding. (Refer to IN - 6)
2. Disconnection of the battery ground terminal
   (1) Turn the ignition switch to OFF, disconnect the battery ground terminal, and then wait for 60 seconds before starting the work. (Refer to IN - 6)
   WARNING:
   The air bag and pretensioner system are fitted with a backup power supply. If you start the work within 60 seconds after disconnecting the battery ground terminal, the air bag may be activated.
   CAUTION:
   To avoid damage to the molding, be sure to fully open the door glasses on both driver's and passenger's sides.
3. Removal of the roof head lining ASSY (Refer to IT - 47)
4. Removal of the curtain airbag module RH
   WARNING:
   When storing a removed curtain airbag module RH, even if it is a temporary storage, be sure to place the airbag module with the deploying side facing upward.
   (1) Check that the ignition switch is turned to OFF.
   (2) Check that the battery ground terminal is disconnected.
   WARNING:
   After disconnecting the battery ground terminal, do not start the work before waiting for 60 seconds.

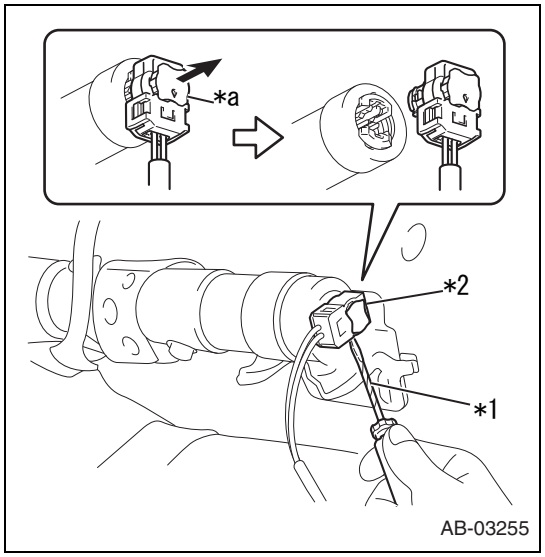

(3) Using a fine flat tip screwdriver wrapped with protective tape, unlock and disconnect the airbag connector.

Captions in illustration

*1	Protective tape
*2	Airbag connector
*a	Unlock it.

(4) Remove 9 bolts and 9 guides, and remove the curtain airbag module RH.
NOTE:
When removing the bolts and the guides, start from the front side of the vehicle.

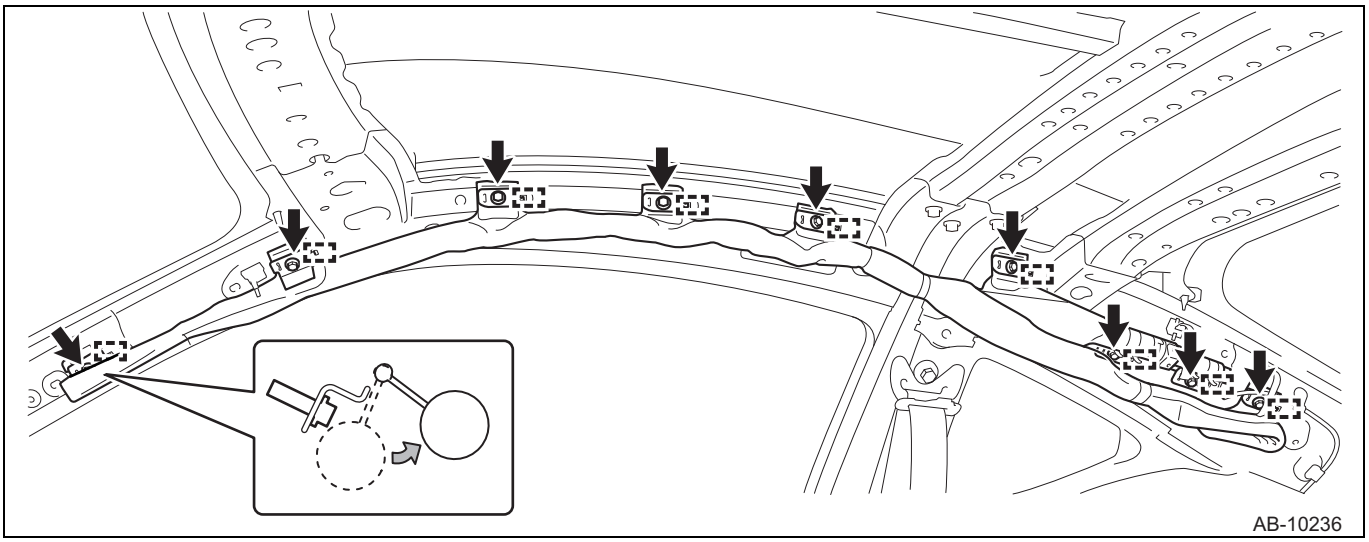

RS

Installation

WARNING:
The following service operations include the works which may affect the SRS airbag system. Before starting work, always be sure to confirm the precautions related to the SRS airbag system. (Refer to RS - 5)
CAUTION:
- Do not allow the harnesses and the connectors to interfere or get tangled with other parts.
- When installing the curtain airbag module, install a specified part at specified place.
- Be careful not to damage the curtain airbag module during installation.
- Never open the curtain airbag module before installation. Never reuse the deployed curtain airbag module.
- Make sure that there are no foreign matter on airbag module.

NOTE:
- The procedures described below are for the RH side. Perform the same procedures for the LH side.
- Lift the airbag module and remove the bolt to release the fixed point in the end.

1. Installation of the curtain airbag module RH
   (1) Before installation, inspect the following items and replace any faulty part with a new one.
      - Airbag cover is scratched or torn.
      - Harness and/or connector is cracked, deformed or broken.
      - Harness wire is exposed.
      - Mounting bracket and securing clip are cracked or deformed.

(2) Check that the ignition switch is turned to OFF.
(3) Check that the battery ground terminal is disconnected.
WARNING:
After disconnecting the battery ground terminal, do not start the work before waiting for 60 seconds.
(4) Install the curtain airbag module RH with 9 guides and 9 bolts following the order described in the figure.

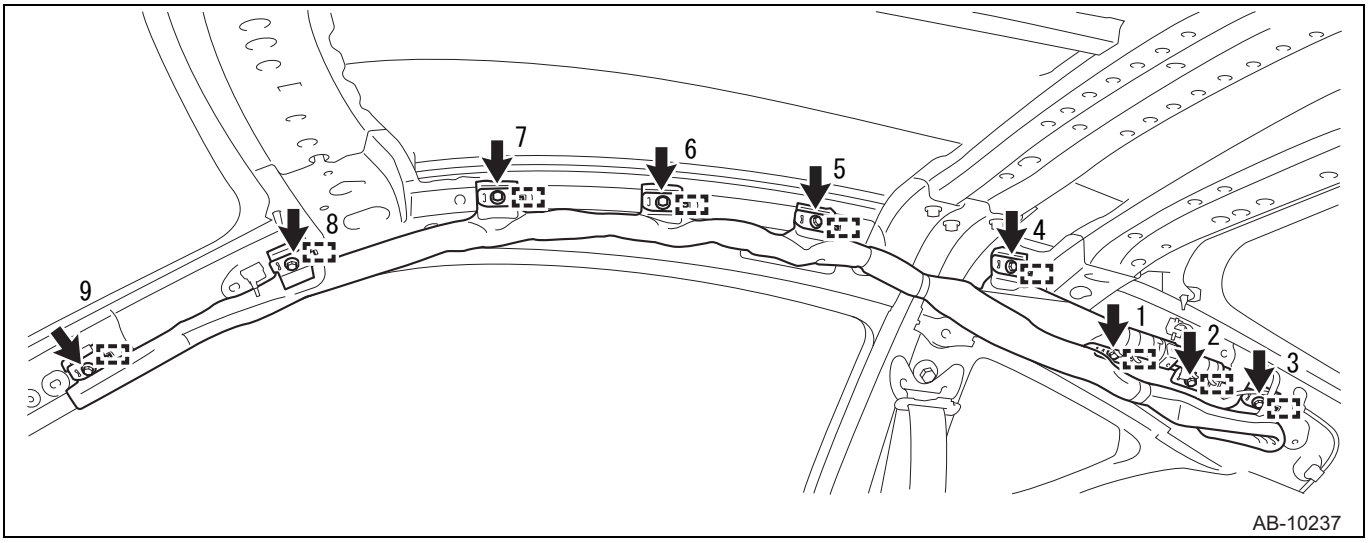

Standard value:T=7.5N·m {77kgf·cm} {5.5ft·lbf}
CAUTION:
- This work should be performed by more than one personnel to prevent the curtain airbag module RH from being bended.
- When temporally installing the curtain airbag module, be careful not to install it in the improper condition where a part of it is turned (twisted) 360° relative to the normal condition.

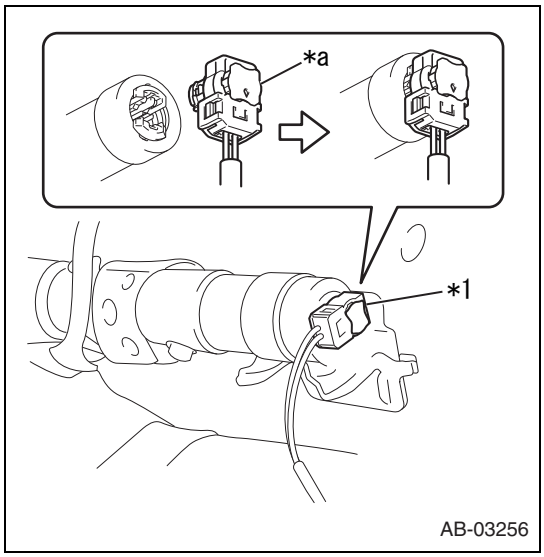

(5) Connect the curtain shield airbag connector to the curtain airbag module RH.

Captions in illustration

*1	Airbag connector
*a	Push and lock it.

(6) Push in the lock of the airbag connector.
CAUTION:
Lock it securely.

2. Installation of the roof head lining ASSY (Refer to IT - 56)
3. Inspection of airbag warning light (Refer to RS - 53)

RS

Side airbag module

Exploded view

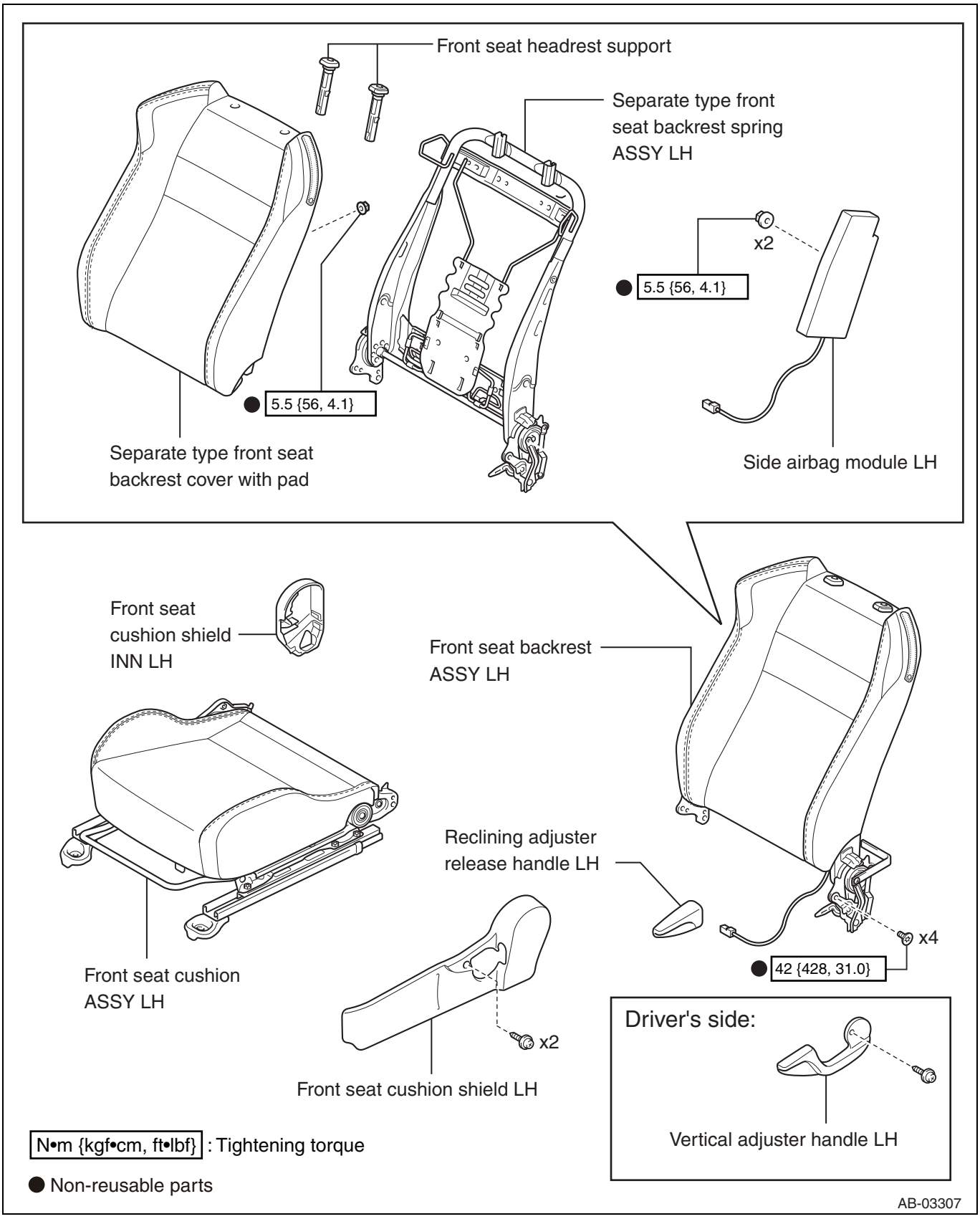

RS

Removal

WARNING:

The following service operations include the works which may affect the SRS airbag system. Before starting work, always be sure to confirm the precautions related to the SRS airbag system. (Refer to RS - 5)

NOTE:

The following procedure is for LH side. Perform the same procedures for the RH side.

1. Precautions
   WARNING:
   Replace the separate type front seat backrest ASSY LH if the side airbag system is activated.
   CAUTION:
   After turning the ignition switch to OFF, you may have to wait for a while before disconnecting the battery terminals. Check appropriate precautions for battery terminal disconnection before proceeding. (Refer to IN - 6)
2. Disconnection of the battery ground terminal
   (1) Turn the ignition switch to OFF, disconnect the battery ground terminal, and then wait for 60 seconds before starting the work. (Refer to IN - 6)
   WARNING:
   The air bag and pretensioner system are fitted with a backup power supply. If you start the work within 60 seconds after disconnecting the battery ground terminal, the air bag may be activated.
   CAUTION:
   To avoid damage to the molding, be sure to fully open the door glasses on both driver's and passenger's sides.
3. Removal of the front seat ASSY LH (Refer to SE - 11)
4. Removal of the reclining adjuster release handle LH (Refer to SE - 12)
5. Removal of the vertical adjuster handle LH (driver's side) (Refer to SE - 13)
6. Removal of the front seat cushion shield LH (Refer to SE - 13)
7. Removal of the front seat cushion shield INN LH (Refer to SE - 13)
8. Removal of the separate type front seat backrest ASSY LH (Refer to SE - 14)
9. Removal of the separate type front seat backrest cover with pad (Refer to SE - 15)

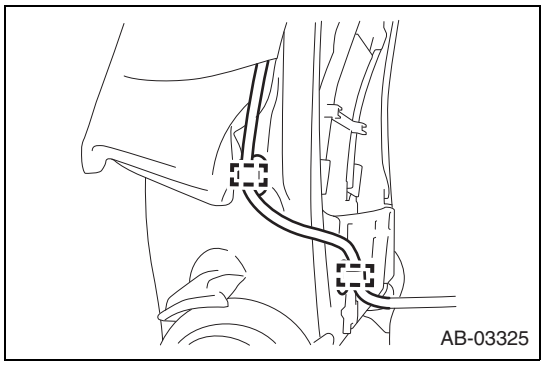

10. Removal of the side airbag module LH
    (1) Release the two clamps and disconnect the wiring harness.

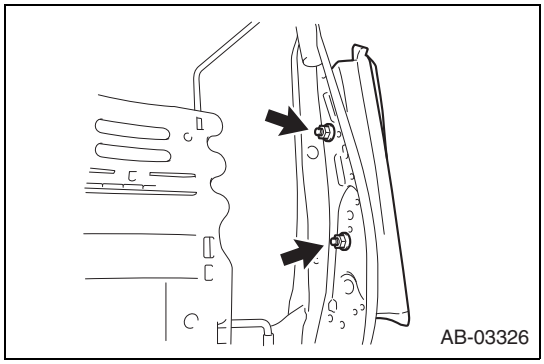

(2) Remove 2 nuts and remove the side airbag module LH.
    WARNING:
    - Do not reuse the removed nuts.
    - If the seat frame ASSY is deformed or damaged, replace it with a new one.

Installation

WARNING:

The following service operations include the works which may affect the SRS airbag system. Before starting work, always be sure to confirm the precautions related to the SRS airbag system. (Refer to RS - 5)

CAUTION:
- Be careful not to stain or damage the separate type front seat backrest cover during assembly. Do not reuse hog rings.
- Secure the hog rings using a hog ring pliers.
- Install the hog rings to the specified points securely and make sure that there is no wrinkle or twisting on the cover COMPL - front backrest.

NOTE:

The following procedure is for LH side. Unless otherwise specified, perform the same procedures for the RH side.

1. Installation of the side airbag module LH
   WARNING:
   - Do not reuse the removed nuts.
   - If the seat frame ASSY is deformed or damaged, replace it with a new one.
   (1) Before installation, inspect the following items and replace any faulty part with a new one.
      - Make sure that there is no foreign matters on the side airbag module.
      - Front seat, airbag module and mounting bracket are damaged or deformed.
      - Harness and/or connector is cracked, deformed or broken.
      - Harness wire is exposed.
   (2) Check that the ignition switch is turned to OFF.
   (3) Check that the battery ground terminal is disconnected.
      WARNING:
      After disconnecting the battery ground terminal, do not start the work before waiting for 60 seconds.
   (4) Install the side airbag module LH with 2 new nuts.
      Standard value:T=5.5N·m {56kgf·cm} {4.1ft·lbf}
   (5) Engage the two clamps to connect the wiring harness.
2. Installation of the separate type front seat backrest cover with pad (Refer to SE - 22)
3. Installation of the separate type front seat backrest ASSY LH
4. Installation of the front seat cushion shield INN LH (Refer to SE - 25)
5. Installation of the front seat cushion shield LH (Refer to SE - 25)
6. Installation of the vertical adjuster handle LH (driver's side) (Refer to SE - 25)
7. Installation of the reclining adjuster release handle LH (Refer to SE - 25)
8. Installation of the front seat ASSY LH (Refer to SE - 25)
9. Connection of the battery ground terminal
   Standard value:T=6.0N·m {61kgf·cm} {4.4ft·lbf}
10. Inspection of airbag warning light (Refer to RS - 53)

Front sub sensor

Exploded view

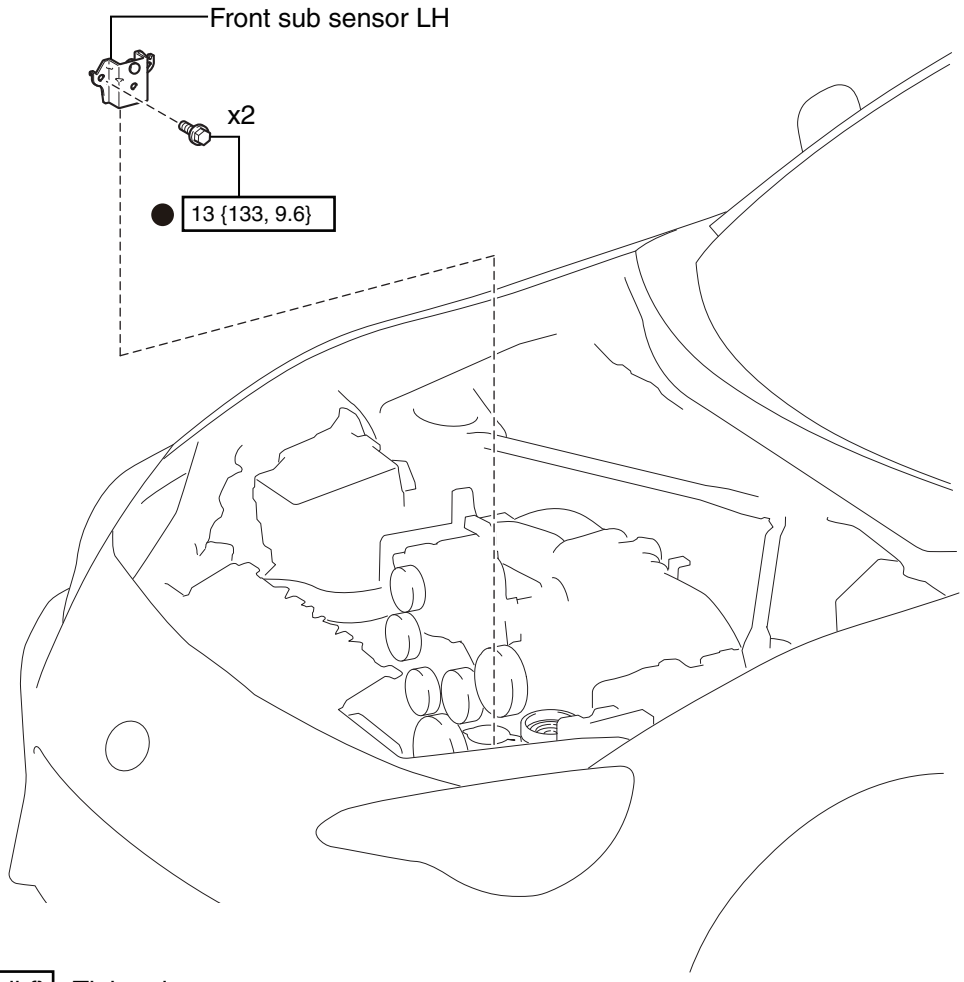

N•m {kgf•cm, ft•lbf} : Tightening torque

● Non-reusable parts

AB-03213

Removal

WARNING:

The following service operations include the works which may affect the SRS airbag system. Before starting work, always be sure to confirm the precautions related to the SRS airbag system. (Refer to RS - 5)

NOTE:

The following procedure is for LH side. Unless otherwise specified, perform the same procedures for the RH side.

1. Precautions

   CAUTION:

   After turning the ignition switch to OFF, you may have to wait for a while before disconnecting the battery terminals. Check appropriate precautions for battery terminal disconnection before proceeding. (Refer to IN - 6)

2. Disconnection of the battery ground terminal

   (1) Turn the ignition switch to OFF, disconnect the battery ground terminal, and then wait for 60 seconds before starting the work. (Refer to IN - 6)

   WARNING:

   The air bag and pretensioner system are fitted with a backup power supply. If you start the work within 60 seconds after disconnecting the battery ground terminal, the air bag may be activated.

   CAUTION:

   To avoid damage to the molding, be sure to fully open the door glasses on both driver's and passenger's sides.

3. Removal of the front sub sensor LH
   (1) Check that the ignition switch is turned to OFF.
   (2) Check that the battery ground terminal is disconnected.
   WARNING:
   - After disconnecting the battery ground terminal, do not start the work before waiting for 60 seconds.
   - If the work is performed before disconnecting the battery ground terminal, the airbag may be activated just by the impact applied to the front sub sensor LH itself. Make sure to confirm the auxiliary battery ground terminal is disconnected before starting the work.
   (3) Remove the clip and move the washer tank filler.

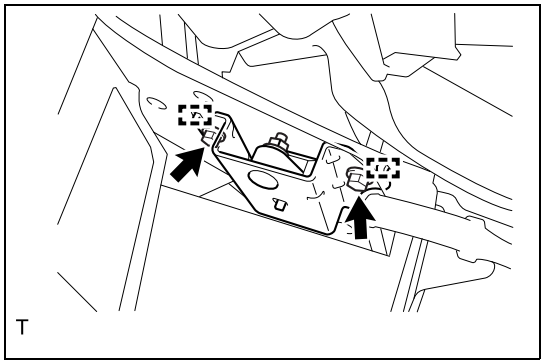

   (4) Remove 2 bolts and 2 guides.
   CAUTION:
   - Do not apply strong impact (such as dropping) to the front sub sensor LH.
   - If strong impact is applied to the front sub sensor LH, replace it with a new one.
   - Do not remove the front sub sensor from the bracket. If the front sub sensor is removed from the bracket, replace it with a new one.

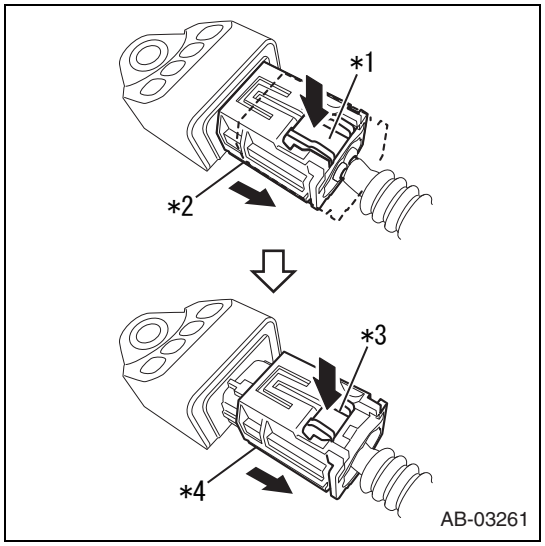

   (5) Disconnect the connector from the front sub sensor LH, and remove the front sub sensor LH.

Captions in illustration

*1	Push the lock button
*2	While pressing the lock button, pull the outer housing
*3	Push the lock button
*4	While pressing the lock button, pull the outer housing

   CAUTION:
   Do not hold and pull the wiring harness.

RS

Installation

WARNING:
The following service operations include the works which may affect the SRS airbag system. Before starting work, always be sure to confirm the precautions related to the SRS airbag system. (Refer to RS - 5)
CAUTION:
- If the airbag has been activated, replace the front sub sensor with a new one.
- Do not reuse the bolt and nut.
  Always replace with the specified new bolt and nut.

NOTE:
The following procedure is for LH side. Unless otherwise specified, perform the same procedures for the RH side.

1. Installation of the front sub sensor LH
   (1) Before installation, inspect the following items and replace any faulty part with a new one.
      - Front sub sensor and bracket are damaged.
      - Connector is damaged.
   (2) Check that the ignition switch is turned to OFF.
   (3) Check that the battery ground terminal is disconnected.
   WARNING:
      - After disconnecting the battery ground terminal, do not start the work before waiting for 60 seconds.

- If the work is performed before disconnecting the battery ground terminal, the airbag may be activated just by the impact applied to the front sub sensor LH itself. Make sure to confirm the battery ground terminal is disconnected before starting the work.

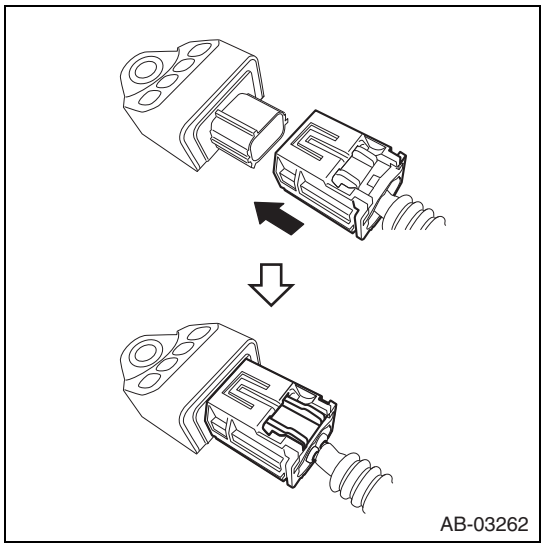

(4) Connect the connector to the front sub sensor LH.
CAUTION:
When engaging the connector, insert it straight taking care not to twist it.

(5) Insert 2 guides and install temporally the front sub sensor LH.
(6) Using 2 bolts, install the front sub sensor LH.
Standard value:T=13N·m {133kgf·cm} {9.6ft·lbf}
(7) Check the front sub sensor LH for looseness.
(8) Move the washer tank filler to the original position.

2. Connection of the battery ground terminal
Standard value:T=6.0N·m {61kgf·cm} {4.4ft·lbf}
3. Inspection of airbag warning light (Refer to RS - 53)

Front door impact sensor

Exploded view

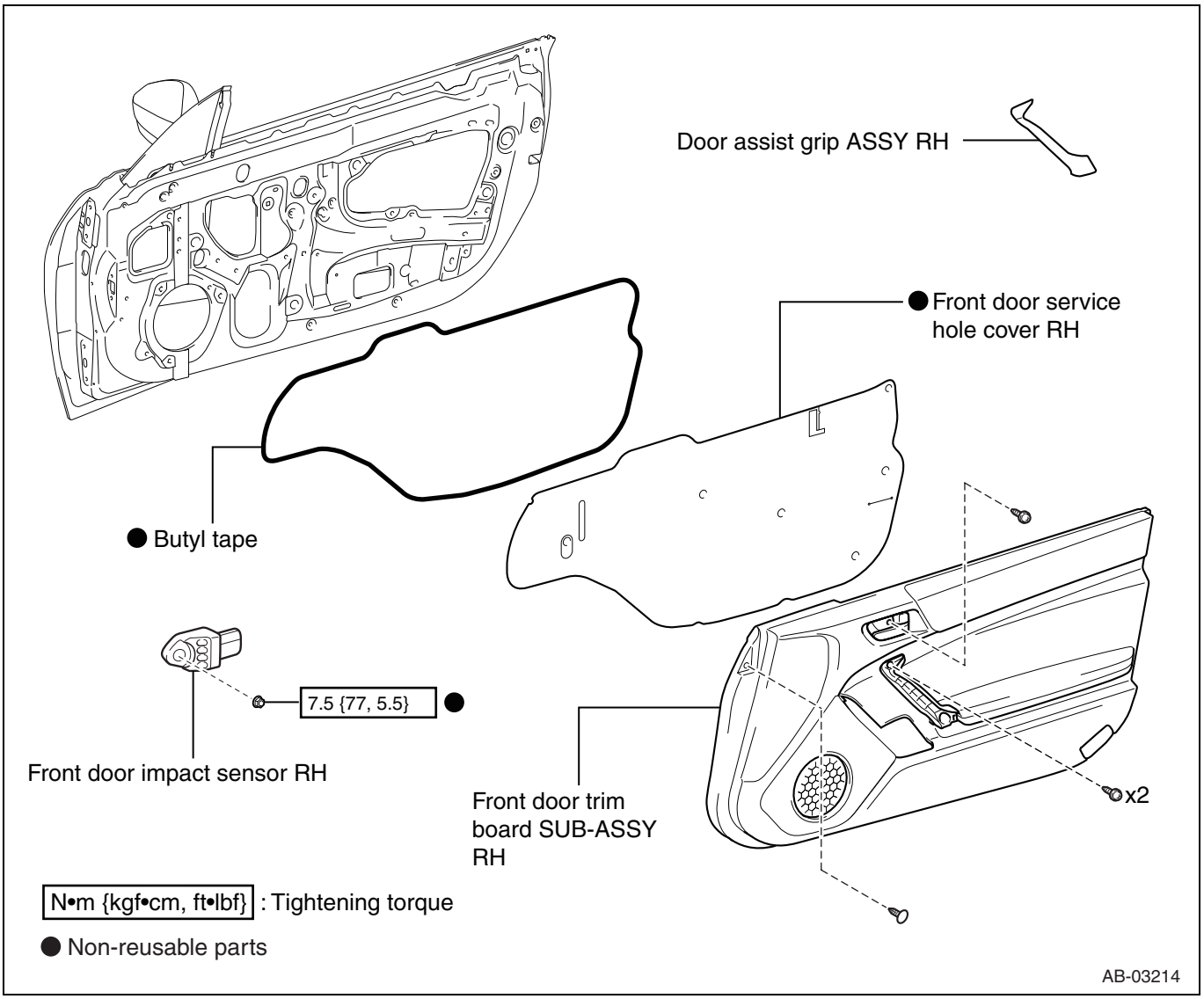

Removal

WARNING:

The following service operations include the works which may affect the SRS airbag system. Before starting work, always be sure to confirm the precautions related to the SRS airbag system. (Refer to RS - 5)

NOTE:

The procedures described below are for the RH side. Perform the same procedures for the LH side.

1. Precautions

   CAUTION:

   After turning the ignition switch to OFF, you may have to wait for a while before disconnecting the battery terminals. Check appropriate precautions for battery terminal disconnection before proceeding. (Refer to IN - 6)

2. Disconnection of the battery ground terminal

   (1) Turn the ignition switch to OFF, disconnect the battery ground terminal, and then wait for 60 seconds before starting the work. (Refer to IN - 6)

   WARNING:

   The air bag and pretensioner system are fitted with a backup power supply. If you start the work within 60 seconds after disconnecting the battery ground terminal, the air bag may be activated.

   CAUTION:

   To avoid damage to the molding, be sure to fully open the door glasses on both driver's and passenger's sides.

3. Removal of the door assist grip ASSY RH (Refer to DH - 32)

4. Removal of the front door trim board SUB-ASSY RH (Refer to DH - 32)
5. Removal of the front door service hole cover RH (Refer to DH - 36)
6. Removal of the front door impact sensor ASSY RH
   (1) Check that the ignition switch is turned to OFF.
   (2) Check that the battery ground terminal is disconnected.
   WARNING:
   - After disconnecting the battery ground terminal, do not start the work before waiting for 60 seconds.
   - If the work is performed before disconnecting the battery ground terminal, the airbag may be activated just by the impact applied to the front door impact sensor ASSY RH itself. Make sure to confirm the auxiliary battery ground terminal is disconnected before starting the work.

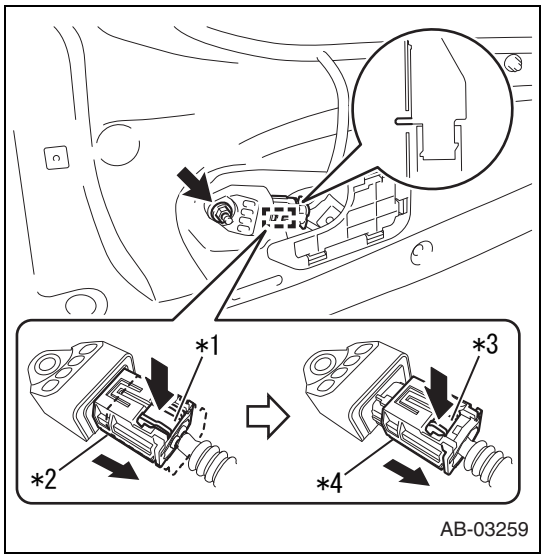

   (3) Remove the nut.

Captions in illustration

*1	Push the lock button
*2	While pressing the lock button, pull the outer housing
*3	Push the lock button
*4	While pressing the lock button, pull the outer housing

CAUTION:
- The pin section (counter rotation part) of the front door impact sensor ASSY RH is easily damaged. When loosening the nut, hold the front door impact sensor ASSY RH by hand.
- Do not apply strong impact (such as dropping) to the front door impact sensor ASSY RH.
- If strong impact is applied to the front door impact sensor ASSY RH, replace it with a new one.

   (4) Slide the outer housing to the direction of the arrow in the figure to disconnect the connector and remove the front door impact sensor ASSY RH.
   CAUTION:
   Do not hold and pull the wiring harness.

Installation

WARNING:
The following service operations include the works which may affect the SRS airbag system. Before starting work, always be sure to confirm the precautions related to the SRS airbag system. (Refer to RS - 5)
CAUTION:
- If the airbag has been activated, replace the front door impact sensor with a new one.
- Do not reuse the bolt and nut.
  Always replace with the specified new bolt and nut.

NOTE:
The procedures described below are for the RH side. Perform the same procedures for the LH side.

1. Installation of the front door impact sensor ASSY RH
   (1) Before installation, inspect the following items and replace any faulty part with a new one.
      - Front door impact sensor is damaged.
      - Connector is damaged.
   (2) Check that the ignition switch is turned to OFF.
   (3) Check that the battery ground terminal is disconnected.
   WARNING:
      - After disconnecting the battery ground terminal, do not start the work before waiting for 60 seconds.
      - If the work is performed before disconnecting the battery ground terminal, the airbag may be activated just by the impact applied to the front door impact sensor ASSY RH itself. Make sure to confirm the battery ground terminal is disconnected before starting the work.

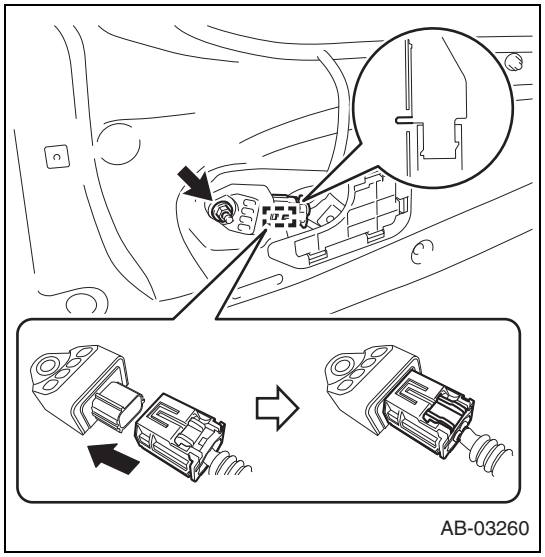
AB-03260

(4) Insert the connector to the direction of the arrow in the figure and connect it to the front door impact sensor ASSY RH.
CAUTION:
When engaging the connector, insert it straight taking care not to twist it.
NOTE:
When the connector is connected, it makes a clicking sound.

(5) Insert the pin section (counter rotation part) into the body hole, and install the front door impact sensor ASSY RH with a nut.
Standard value:T=7.5N·m {77kgf·cm} {5.5ft·lbf}
CAUTION:
- Do not reuse the front door impact sensor ASSY RH, if strong impact (such as dropping) is applied to it during the work.
- Set the pin section (counter rotation part) to the body hole securely.
- The pin section (counter rotation part) is easily damaged. When tightening the bolt, hold the front door impact sensor ASSY RH by hand.

(6) Check the installed front door impact sensor ASSY RH for looseness.

RS

2. Installation of the front door service hole cover RH (Refer to DH - 49)
3. Installation of the front door trim board SUB-ASSY RH (Refer to DH - 52)
4. Installation of the door assist grip ASSY RH (Refer to DH - 54)
5. Connection of the battery ground terminal
Standard value:T=6.0N·m {61kgf·cm} {4.4ft·lbf}
6. Inspection of airbag warning light (Refer to RS - 53)

Side airbag sensor

Exploded view

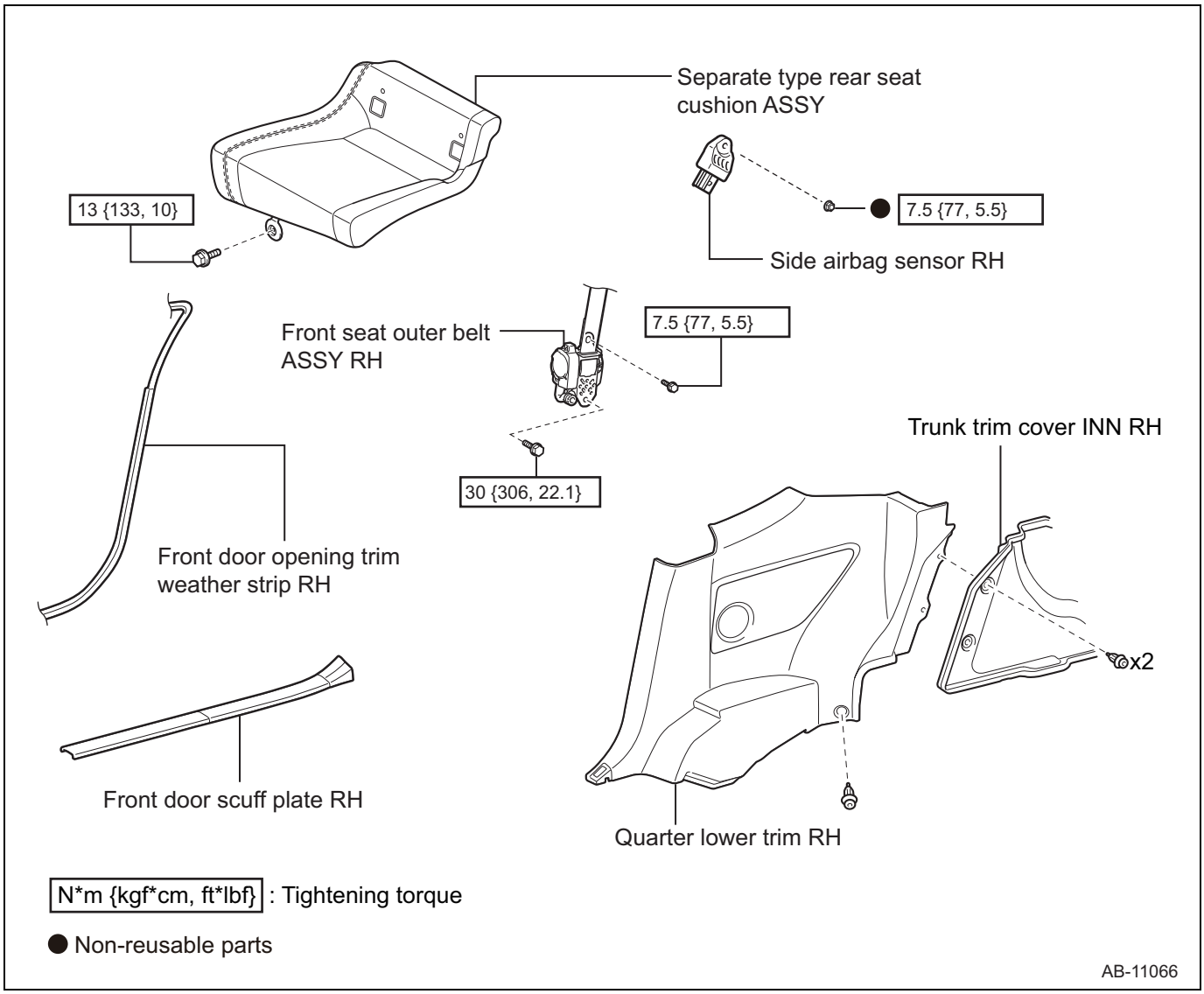

Removal

WARNING:

The following service operations include the works which may affect the SRS airbag system. Before starting work, always be sure to confirm the precautions related to the SRS airbag system. (Refer to RS - 5)

NOTE:

The procedures described below are for the RH side. Unless otherwise specified, perform the same procedures for the LH side.

1. Precautions

   CAUTION:

   After turning the ignition switch to OFF, you may have to wait for a while before disconnecting the battery terminals. Check appropriate precautions for battery terminal disconnection before proceeding. (Refer to IN - 6)

2. Disconnection of the battery ground terminal

   (1) Turn the ignition switch to OFF, disconnect the battery ground terminal, and then wait for 60 seconds before starting the work. (Refer to IN - 6)

   WARNING:

   The air bag and pretensioner system are fitted with a backup power supply. If you start the work within 60 seconds after disconnecting the battery ground terminal, the air bag may be activated.

   CAUTION:

   To avoid damage to the molding, be sure to fully open the door glasses on both driver's and passenger's sides.

3. Removal of separate type rear seat cushion ASSY (Refer to SE - 31)

4. Removal of the front door scuff plate RH (Refer to IT - 48)
5. Removal of the front door opening trim weather strip RH
   (1) Remove the front door opening trim weather strip RH to the extent that the luggage compartment trim side cover RH can be removed.
6. Removal of quarter lower trim RH (Refer to IT - 49)

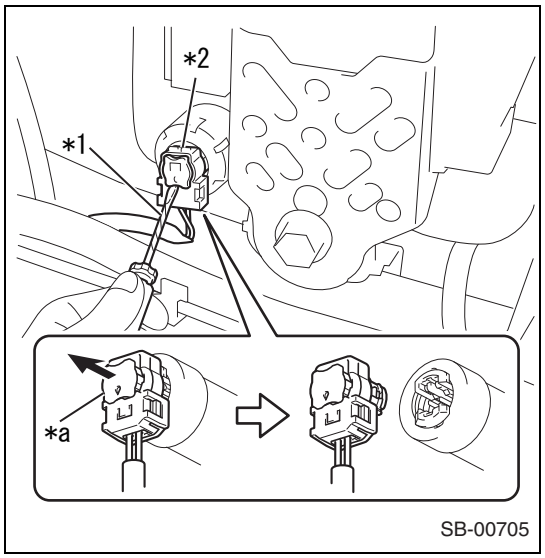

7. Removal of the seat belt pretensioner RH
   (1) Using the fine flat tip screwdriver wrapped with protective tape, pull off the lock of the pretensioner connector to unlock it.

Captions in illustration

*1	Protective tape
*2	Pretensioner connector
*a	Unlock it.

   (2) Using the fine flat tip screwdriver wrapped with protective tape, disconnect the pretensioner connector.

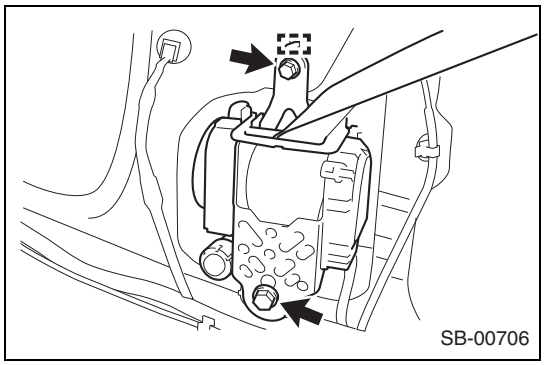

   (3) Remove 2 bolts and guides, and remove the seat belt pretensioner RH.

RS

8. Removal of the side airbag sensor RH
   (1) Check that the ignition switch is turned to OFF.
   (2) Check that the battery ground terminal is disconnected.
   WARNING:
   - After disconnecting the battery ground terminal, do not start the work before waiting for 60 seconds.
   - If the work is performed before disconnecting the battery ground terminal, the airbag may be activated just by the impact applied to the side airbag sensor RH itself. Make sure to confirm the battery ground terminal is disconnected before starting the work.
   (3) Remove the nut and remove the side airbag sensor RH.

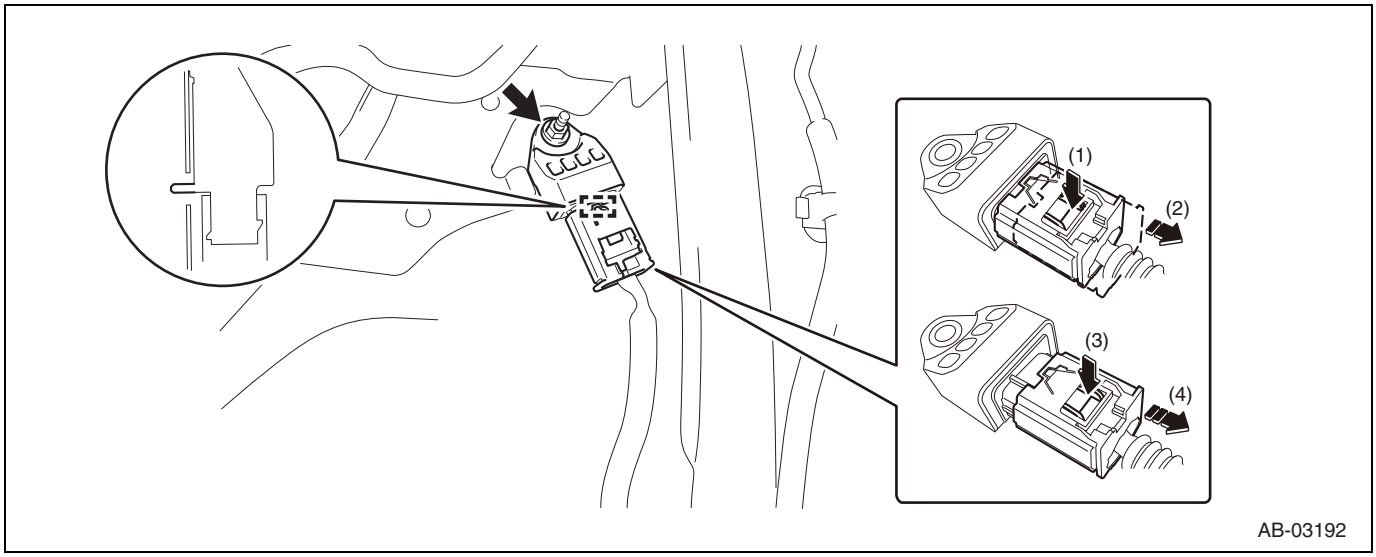

CAUTION:
- The pin section (counter rotation part) of the side airbag sensor RH is easily damaged. When loosening the nut, hold the side airbag sensor RH by hand.
- Do not apply strong impact (such as dropping) to the side airbag sensor RH.
- If strong impact is applied to the side airbag sensor RH, replace it with a new one.

Installation

WARNING:

The following service operations include the works which may affect the SRS airbag system. Before starting work, always be sure to confirm the precautions related to the SRS airbag system. (Refer to RS - 5)

CAUTION:
- If the airbag has been activated, replace the side airbag sensor with a new one.
- Do not reuse the bolt and nut.
  Always replace with the specified new bolt and nut.

NOTE:

The procedures described below are for the RH side. Perform the same procedures for the LH side.

1. Installation of the side airbag sensor RH
   (1) Before installation, inspect the following items and replace any faulty part with a new one.
      - Side airbag sensor is damaged.
      - Connector is damaged.
   (2) Check that the ignition switch is turned to OFF.
   (3) Check that the battery ground terminal is disconnected.
      WARNING:
      - After disconnecting the battery ground terminal, do not start the work before waiting for 60 seconds.
      - If the work is performed before disconnecting the battery ground terminal, the airbag may be activated just by the impact applied to the side airbag sensor RH itself. Make sure to confirm the auxiliary battery ground terminal is disconnected before starting the work.
   (4) Before connecting the connector, confirm that it is in the position shown in the figure.

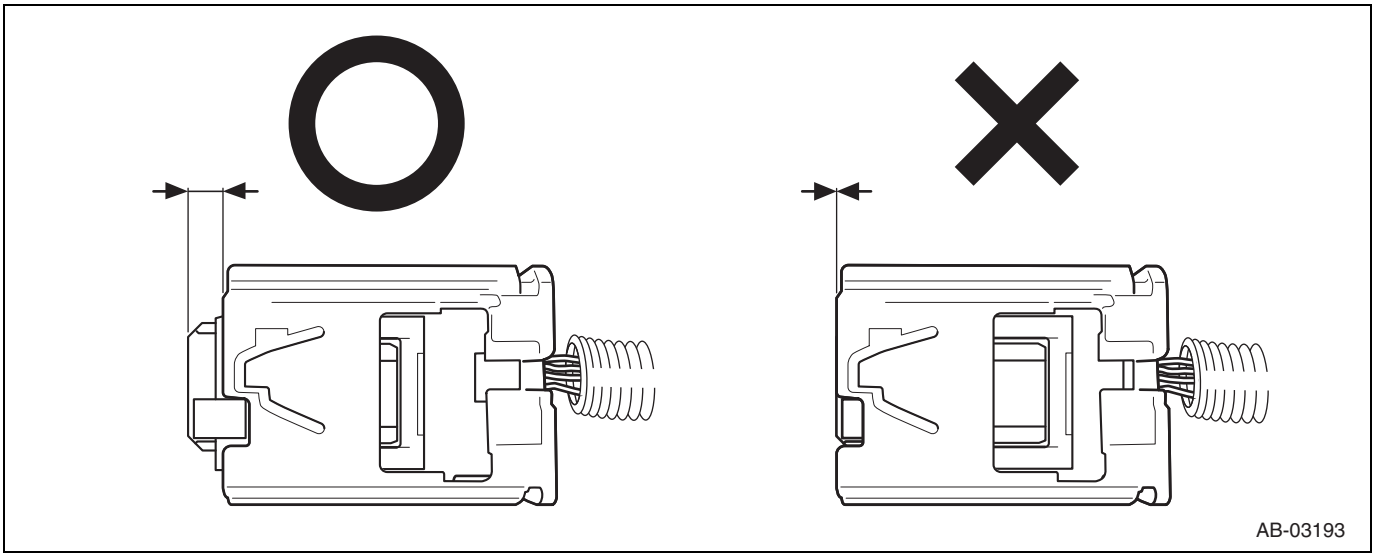

(5) Holding the yellow connector part, insert the connector to the direction of the arrow in the figure and connect it to the side airbag sensor RH.

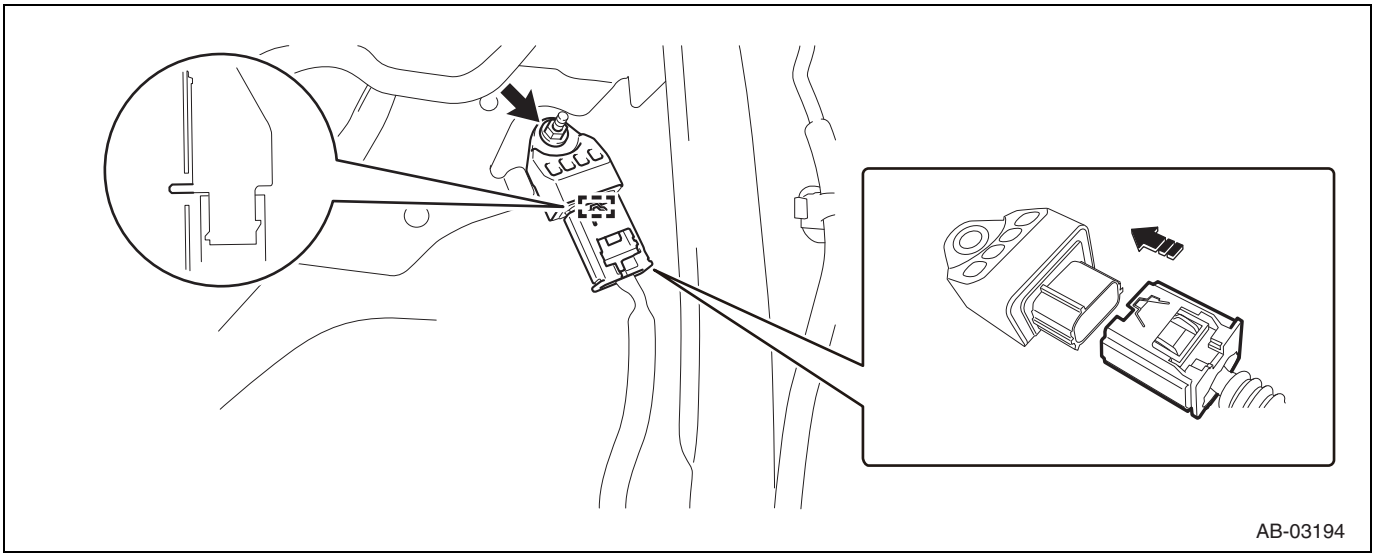

CAUTION:
When engaging the connector, insert it straight taking care not to twist it.
NOTE:
When the connector is connected, it makes a clicking sound.

(6) Insert the pin section (counter rotation part) into the body hole, and install the side airbag sensor RH with a nut.
Standard value:T=7.5N·m {77kgf·cm} {5.5ft·lbf}
CAUTION:
- Do not reuse the side airbag sensor RH, if strong impact (such as dropping) is applied to it during the work.
- Set the pin section (counter rotation part) to the body hole securely.
- The pin section (counter rotation part) is easily damaged. When tightening the bolt, hold the side airbag sensor RH by hand.

(7) Check the installed side airbag sensor RH for looseness.

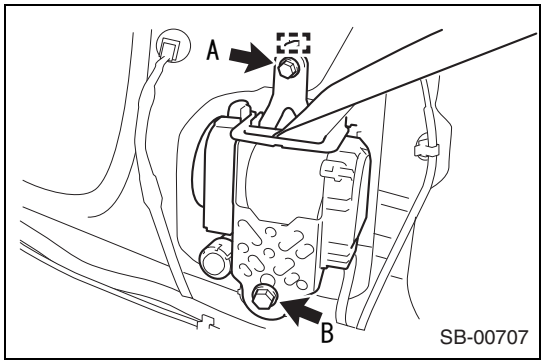

2. Installation of the seat belt pretensioner RH
   (1) Insert the guide, and install the retractor part of the seat belt pretensioner RH with 2 bolts.
   Standard value:Bolt A
   T=7.5N·m {77kgf·cm} {5.5ft·lbf}
   Bolt B
   T=30N·m {306kgf·cm} {22.1ft·lbf}

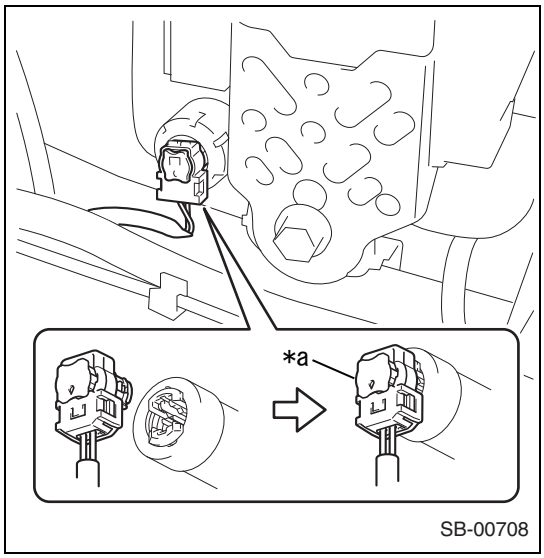

   (2) Connect the pretensioner connector to the seat belt pretensioner RH.

Captions in illustration

*a	Lock it.

   (3) Push in the lock of the pretensioner connector.
   CAUTION:
   Lock it securely.

3. Installation of the quarter lower trim RH (Refer to IT - 58)
4. Installation of the front door opening trim weather strip RH (Refer to IT - 58)
5. Installation of the front door scuff plate RH (Refer to IT - 58)
6. Installation of separate type rear seat cushion ASSY (Refer to SE - 39)
7. Connection of the battery ground terminal
   Standard value:T=6.0N·m {61kgf·cm} {4.4ft·lbf}
8. Inspection of airbag warning light (Refer to RS - 53)

Curtain airbag sensor

Exploded view

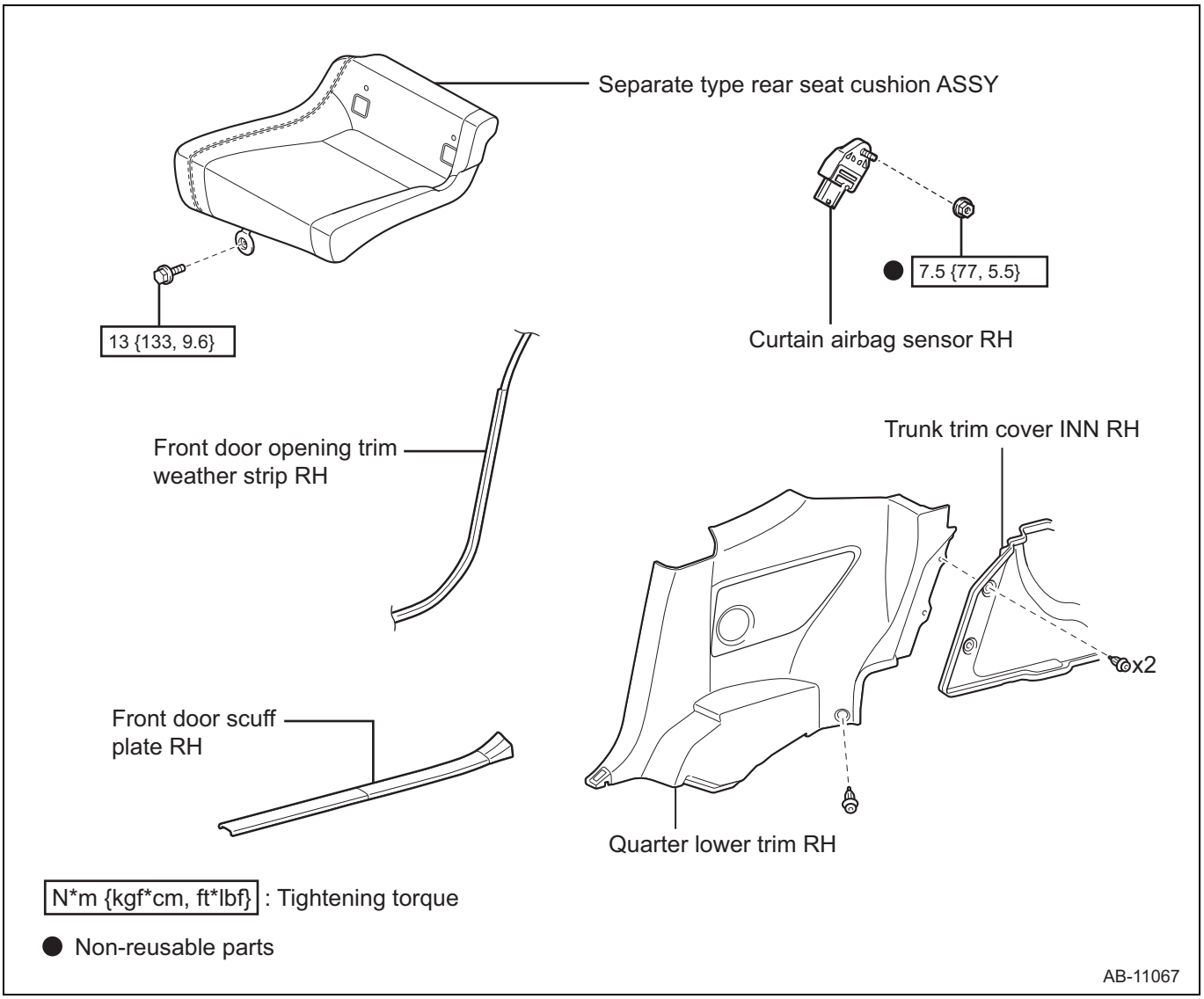

Removal

WARNING:

The following service operations include the works which may affect the SRS airbag system. Before starting work, always be sure to confirm the precautions related to the SRS airbag system. (Refer to RS - 5)

NOTE:

The procedures described below are for the RH side. Perform the same procedures for the LH side.

1. Precautions

   CAUTION:

   After turning the ignition switch to OFF, you may have to wait for a while before disconnecting the battery terminals. Check appropriate precautions for battery terminal disconnection before proceeding. (Refer to IN - 6)

2. Disconnection of the battery ground terminal

   (1) Turn the ignition switch to OFF, disconnect the battery ground terminal, and then wait for 60 seconds before starting the work. (Refer to IN - 6)

   WARNING:

   The air bag and pretensioner system are fitted with a backup power supply. If you start the work within 60 seconds after disconnecting the battery ground terminal, the air bag may be activated.

   CAUTION:

   To avoid damage to the molding, be sure to fully open the door glasses on both driver's and passenger's sides.

3. Removal of separate type rear seat cushion ASSY (Refer to SE - 31)

4. Removal of the front door scuff plate RH (Refer to IT - 48)
5. Removal of the front door opening trim weather strip RH
   (1) Remove the front door opening trim weather strip RH to the extent that the luggage compartment trim side cover RH can be removed.
6. Removal of quarter lower trim RH (Refer to IT - 49)
7. Removal of the curtain airbag sensor RH

   WARNING:

   If the work is performed before disconnecting the battery ground terminal, the airbag may be deployed just by the impact applied to the curtain airbag sensor RH itself. Make sure to confirm the battery ground terminal is disconnected before starting the work.

   (1) Check that the ignition switch is turned to OFF.
   (2) Check that the battery ground terminal is disconnected.

   WARNING:

   - After disconnecting the battery ground terminal, do not start the work before waiting for 60 seconds.
   - If the work is performed before disconnecting the battery ground terminal, the airbag may be activated just by the impact applied to the curtain airbag sensor RH itself. Make sure to confirm the battery ground terminal is disconnected before starting the work.

   (3) Remove the nut and remove the curtain airbag sensor RH.

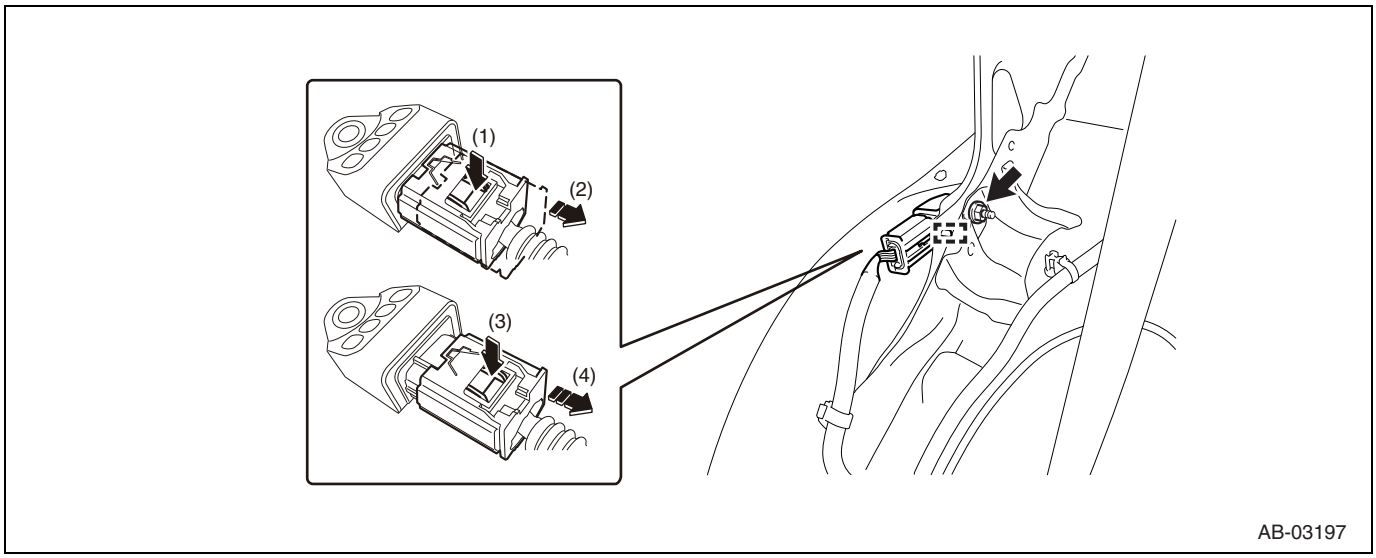

CAUTION:

- The pin section (counter rotation part) of the curtain airbag sensor RH is easily damaged. When loosening the nut, hold the curtain airbag sensor RH by hand.
- Do not apply strong impact (such as dropping) to the curtain airbag sensor RH.
- If strong impact is applied to the curtain airbag sensor RH, replace it with a new one.

Installation

WARNING:

The following service operations include the works which may affect the SRS airbag system. Before starting work, always be sure to confirm the precautions related to the SRS airbag system. (Refer to RS - 5)

CAUTION:

- If the airbag has been activated, replace the curtain airbag sensor with a new one.
- Do not reuse the bolt and nut.
  Always replace with the specified new bolt and nut.

NOTE:

The procedures described below are for the RH side. Perform the same procedures for the LH side.

1. Installation of the curtain airbag sensor RH
   (1) Before installation, inspect the following items and replace any faulty part with a new one.
      - Curtain airbag sensor is damaged.
      - Connector is damaged.
   (2) Check that the ignition switch is turned to OFF.
   (3) Check that the battery ground terminal is disconnected.

WARNING:
- After disconnecting the battery ground terminal, do not start the work before waiting for 60 seconds.
- If the work is performed before disconnecting the battery ground terminal, the airbag may be activated just by the impact applied to the curtain airbag sensor RH itself. Make sure to confirm the battery ground terminal is disconnected before starting the work.

(4) Before connecting the connector, confirm that it is in the position shown in the figure.

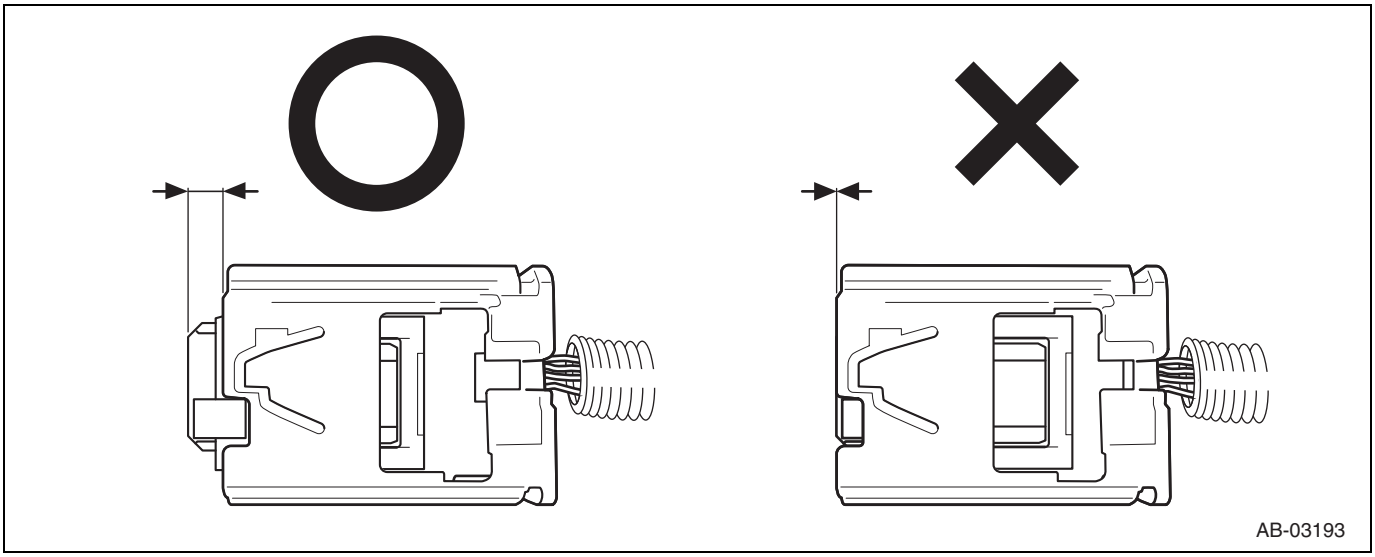

(5) Holding the yellow connector part, insert the connector to the direction of the arrow in the figure and connect it to the curtain airbag sensor RH.

RS

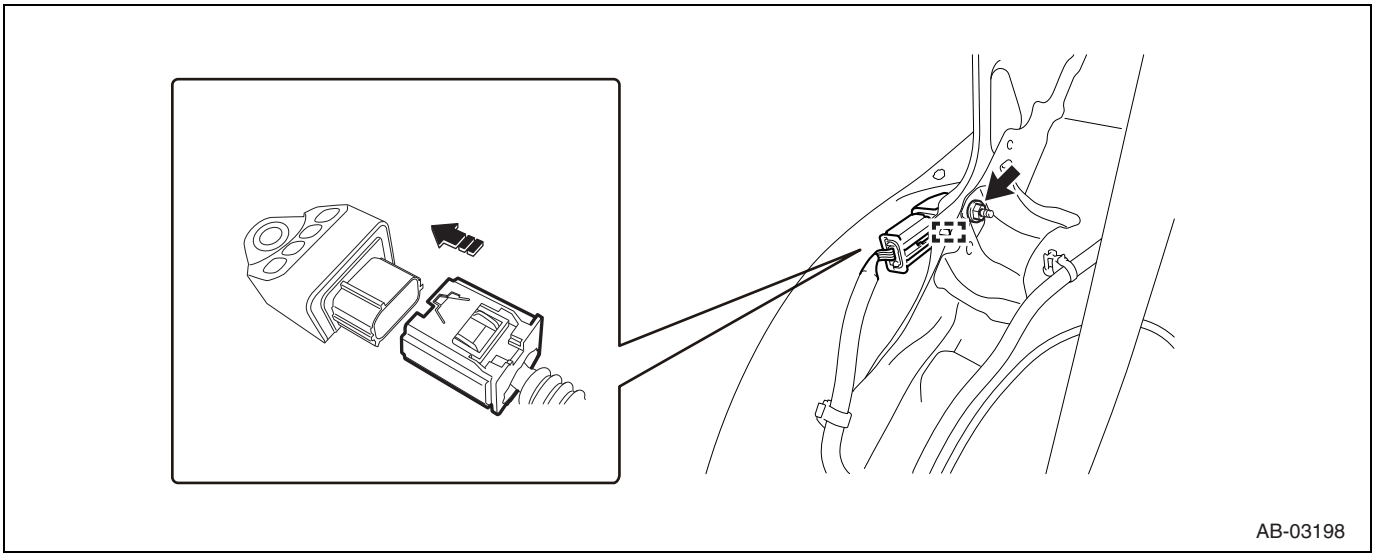

NOTE:
When the connector is connected, it makes a clicking sound.

(6) Insert the pin section (counter rotation part) into the body hole, and install the curtain airbag sensor RH with a nut.
Standard value:T=7.5N·m {77kgf·cm} {5.5ft·lbf}
CAUTION:
- Do not reuse the curtain airbag sensor RH, if strong impact (such as dropping) is applied to it during the work.
- Set the pin section (counter rotation part) to the body hole securely.
- The pin section (counter rotation part) is easily damaged. When tightening the nut, hold the curtain airbag sensor RH by hand.

(7) Shake the curtain airbag sensor RH, and check for looseness.

2. Installation of the quarter lower trim RH (Refer to IT - 58)
3. Installation of the front door opening trim weather strip RH (Refer to IT - 58)
4. Installation of the front door scuff plate RH (Refer to IT - 58)
5. Installation of the separate type rear seat cushion ASSY

6. Connection of the battery ground terminal
   Standard value:T=6.0N·m {61kgf·cm} {4.4ft·lbf}
7. Inspection of airbag warning light (Refer to RS - 53)

Satellite safing sensor

Exploded view

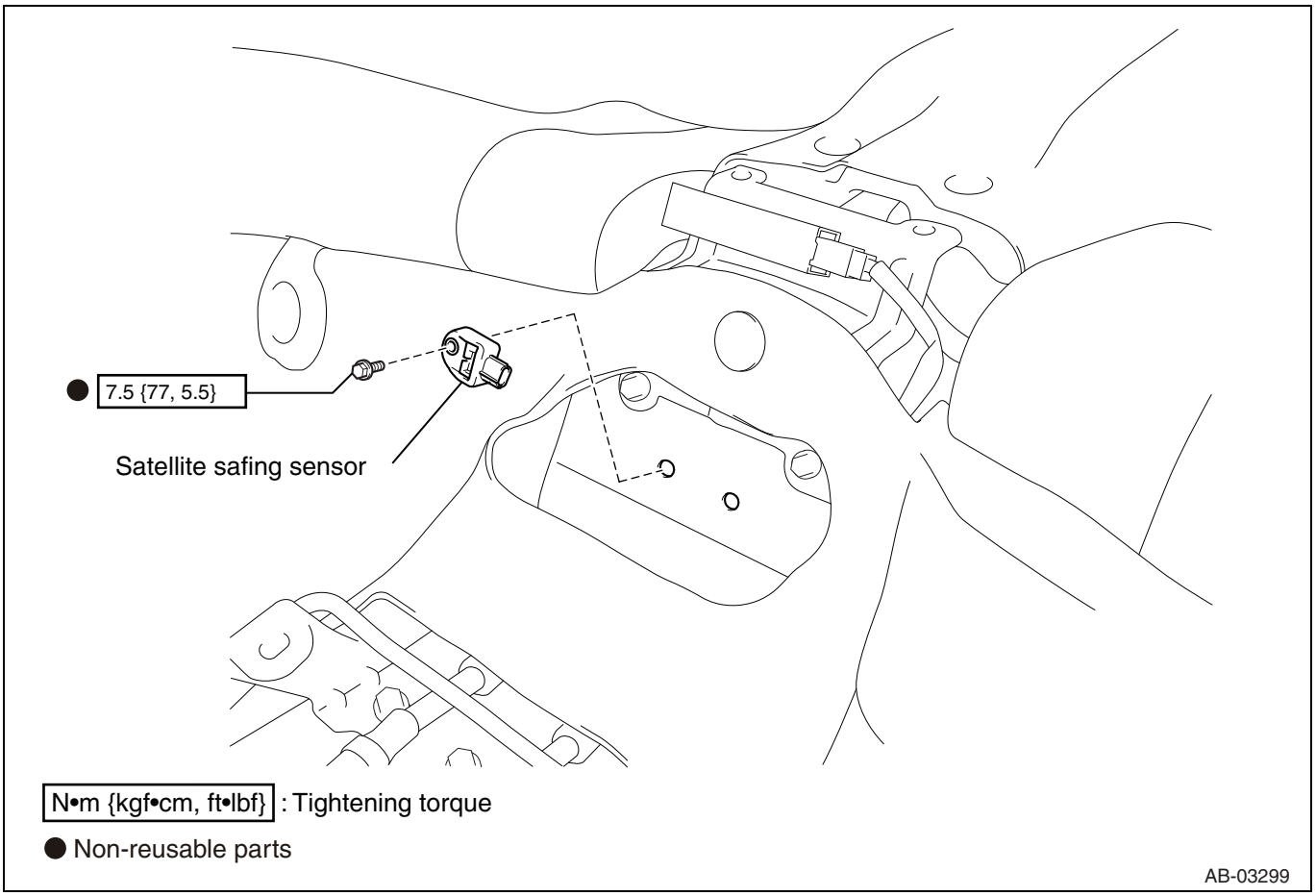

RS

Removal

WARNING:

The following service operations include the works which may affect the SRS airbag system. Before starting work, always be sure to confirm the precautions related to the SRS airbag system. (Refer to RS - 5)

1. Precautions
   CAUTION:
   After turning the ignition switch to OFF, you may have to wait for a while before disconnecting the battery terminals. Check appropriate precautions for battery terminal disconnection before proceeding. (Refer to IN - 6)
2. Disconnection of the battery ground terminal
   (1) Turn the ignition switch to OFF, disconnect the battery ground terminal, and then wait for 60 seconds before starting the work. (Refer to IN - 6)
   WARNING:
   The air bag and pretensioner system are fitted with a backup power supply. If you start the work within 60 seconds after disconnecting the battery ground terminal, the air bag may be activated.
   CAUTION:
   To avoid damage to the molding, be sure to fully open the door glasses on both driver's and passenger's sides.
3. Removal of console box ASSY (Refer to IT - 33)
4. Removal of the satellite safing sensor
   (1) Check that the ignition switch is turned to OFF.
   (2) Check that the battery ground terminal is disconnected.
   WARNING:
   - After disconnecting the battery ground terminal, do not start the work before waiting for 60 seconds.
   - If the work is performed before disconnecting the battery ground terminal, the airbag may be activated just by the impact applied to the satellite safing sensor itself. Make sure to confirm the battery ground terminal is disconnected before starting the work.

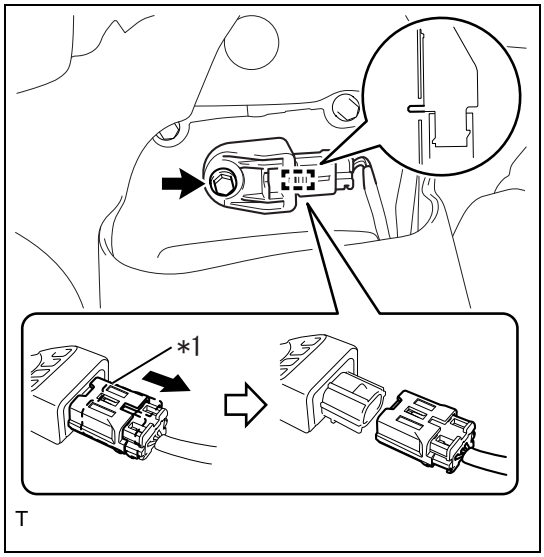

(3) Remove the bolt.
CAUTION:
- The pin section (counter rotation part) of the satellite safing sensor is easily damaged. When loosening the bolt, hold the satellite safing sensor by hand.
- Do not apply strong impact (such as dropping) to the satellite safing sensor.
- If strong impact is applied to the satellite safing sensor, replace it with a new one.

Captions in illustration

*1	Outer housing

(4) Slide the outer housing to the direction of the arrow in the figure to disconnect the connector and remove the satellite safing sensor.
CAUTION:
Do not hold and pull the wiring harness.

Installation

WARNING:
The following service operations include the works which may affect the SRS airbag system. Before starting work, always be sure to confirm the precautions related to the SRS airbag system. (Refer to RS - 5)
CAUTION:
- If the airbag has been activated, replace the satellite safing sensor with a new one.
- Do not reuse the bolt and nut.
  Always replace with the specified new bolt and nut.

1. Installation of the satellite safing sensor
   (1) Before installation, inspect the following items and replace any faulty part with a new one.
   - Satellite safing sensor is damaged.
   - Connector is damaged.

   (2) Check that the ignition switch is turned to OFF.
   (3) Check that the battery ground terminal is disconnected.
   WARNING:
   - After disconnecting the battery ground terminal, do not start the work before waiting for 60 seconds.
   - If the work is performed before disconnecting the battery ground terminal, the airbag may be activated just by the impact applied to the satellite safing sensor itself. Make sure to confirm the battery ground terminal is disconnected before starting the work.

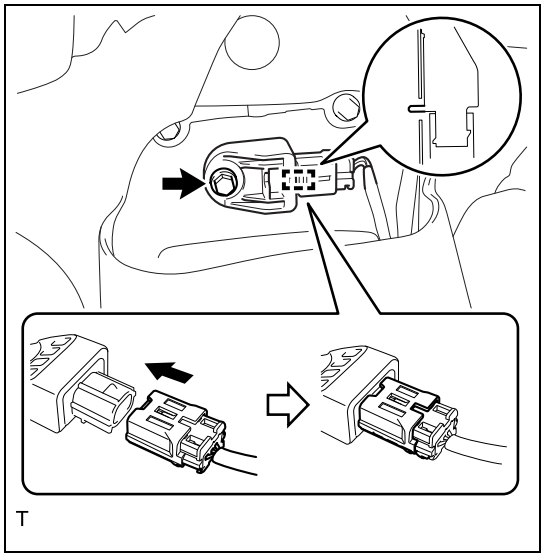
T

(4) Insert the connector to the direction of the arrow in the figure and connect it to the satellite safing sensor.
CAUTION:
When engaging the connector, insert it straight taking care not to twist it.
NOTE:
When the connector is connected, it makes a clicking sound.

(5) Insert the pin section (counter rotation part) into the body hole, and install the satellite safing sensor with a bolt.
Standard value:T=7.5N·m {77kgf·cm} {5.5ft·lbf}
CAUTION:
- Do not reuse the satellite safing sensor, if strong impact (such as dropping) is applied to it during the work.
- Set the pin section (counter rotation part) to the body hole securely.
- The pin section (counter rotation part) is easily damaged. When tightening the bolt, hold the satellite safing sensor by hand.

(6) Check the installed satellite safing sensor for looseness.

2. Installation of console box ASSY (Refer to IT - 38)
3. Connection of the battery ground terminal
Standard value:T=6.0N·m {61kgf·cm} {4.4ft·lbf}
4. Inspection of airbag warning light (Refer to RS - 53)

Airbag control module

Exploded view

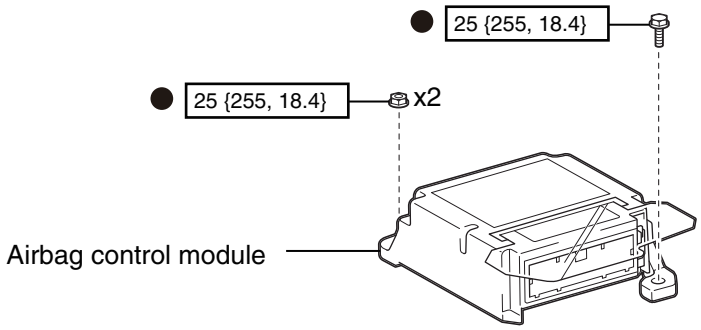

N•m {kgf•cm, ft•lbf} : Tightening torque

● Non-reusable parts

AB-03298

Removal

WARNING:

The following service operations include the works which may affect the SRS airbag system. Before starting work, always be sure to confirm the precautions related to the SRS airbag system. (Refer to RS - 5)

1. Precautions
   CAUTION:
   After turning the ignition switch to OFF, you may have to wait for a while before disconnecting the battery terminals. Check appropriate precautions for battery terminal disconnection before proceeding. (Refer to IN - 6)
2. Disconnection of the battery ground terminal
   (1) Turn the ignition switch to OFF, disconnect the battery ground terminal, and then wait for 60 seconds before starting the work. (Refer to IN - 6)
   WARNING:
   The air bag and pretensioner system are fitted with a backup power supply. If you start the work within 60 seconds after disconnecting the battery ground terminal, the air bag may be activated.
   CAUTION:
   To avoid damage to the molding, be sure to fully open the door glasses on both driver's and passenger's sides.
3. Removal of console box ASSY (Refer to IT - 33)
4. Removal of the air conditioner control ASSY (for automatic air conditioning systems) (Refer to AC - 170)
5. Removal of the air conditioner control ASSY (for manual air conditioning systems) (Refer to AC - 174)
6. Removal of the air conditioner control ASSY (without air conditioner) (Refer to AC - 174)
7. Removal of the airbag control module
   (1) Check that the ignition switch is turned to OFF.
   (2) Check that the battery ground terminal is disconnected.
   WARNING:
   - After disconnecting the battery ground terminal, do not start the work before waiting for 60 seconds.
   - If the work is performed before disconnecting the battery ground terminal, the airbag may be activated just by the impact applied to the airbag control module itself. Make sure to confirm the battery ground terminal is disconnected before starting the work.

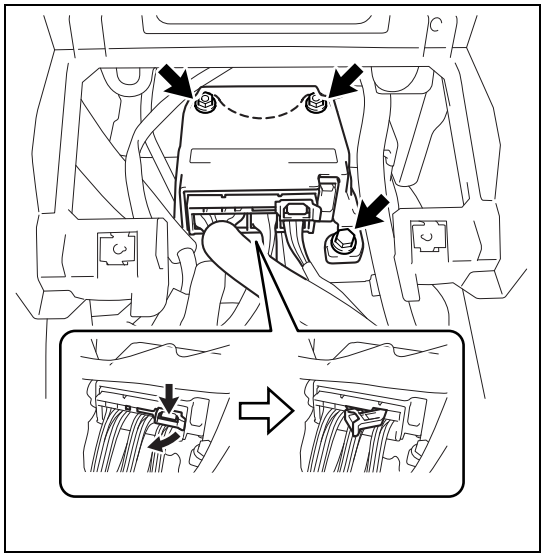

(3) Unlock the connector as shown in the figure, and disconnect the connector from the airbag control module.

(4) Remove 2 bolts and nuts and disconnect the airbag control module.
CAUTION:
- Do not apply strong impact (such as dropping) to the airbag control module.
- If strong impact is applied to the airbag control module, replace it with a new one.
- The airbag control module should be stored in a dry, clean place away from moisture, heat sources, and dust.
- Do not disassemble the airbag control module.

Installation

WARNING:
The following service operations include the works which may affect the SRS airbag system. Before starting work, always be sure to confirm the precautions related to the SRS airbag system. (Refer to RS - 5)
CAUTION:
- Do not reuse the bolt and nut.
  Always replace with the specified new bolt and nut.

1. Installation of the airbag control module
   (1) Before installation, inspect the following items and replace any faulty part with a new one.
   - Control module is deformed.
   - Control module seems to have been wet with water.
   - Control module connector is damaged.
   - Control module mounting bracket is damaged.

   (2) Check that the ignition switch is turned to OFF.
   (3) Check that the battery ground terminal is disconnected.
   WARNING:
   - After disconnecting the battery ground terminal, do not start the work before waiting for 60 seconds.
   - If the work is performed before disconnecting the battery ground terminal, the airbag may be activated just by the impact applied to the airbag control module itself. Make sure to confirm the battery ground terminal is disconnected before starting the work.

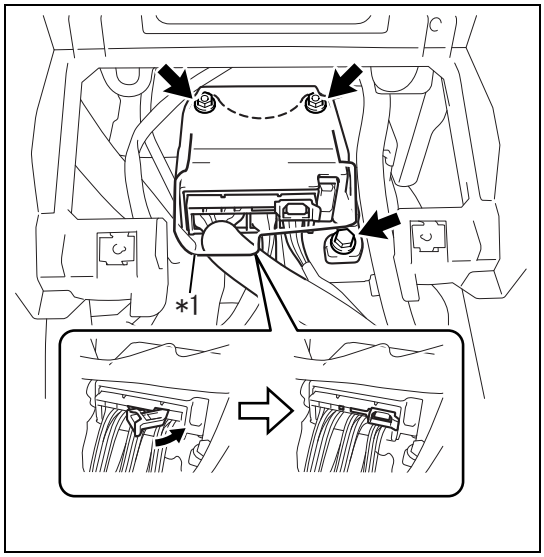

(4) Install the airbag control module with 2 bolts and nuts.
Standard value:T=25N·m {255kgf·cm} {18.4ft·lbf}
CAUTION:
- Do not reuse the airbag control module, if strong impact (such as dropping) is applied to it during the work.
- When the ignition switch is turned to ON for the first time after replacing the airbag control module, make sure that there is no one inside the vehicle.

Captions in illustration

*1	Drip-proof sheet

(5) Connect the connector to the airbag control module as shown in the figure, and lock it securely.
CAUTION:
Check that the drip-proof sheet is not being turned over or caught in.

(6) Check the installed airbag control module for looseness.

2. Installation of the air conditioner control ASSY (for automatic air conditioning systems) (Refer to AC - 171)
3. Installation of the air conditioner control ASSY (for manual air conditioning systems) (Refer to AC - 178)
4. Installation of the air conditioner control ASSY (without air conditioner) (Refer to AC - 178)
5. Installation of console box ASSY (Refer to IT - 38)
6. Connection of the battery ground terminal
Standard value:T=6.0N·m {61kgf·cm} {4.4ft·lbf}
7. Inspection of airbag warning light (Refer to RS - 53)

Passenger's airbag ON / OFF indicator light

Exploded view

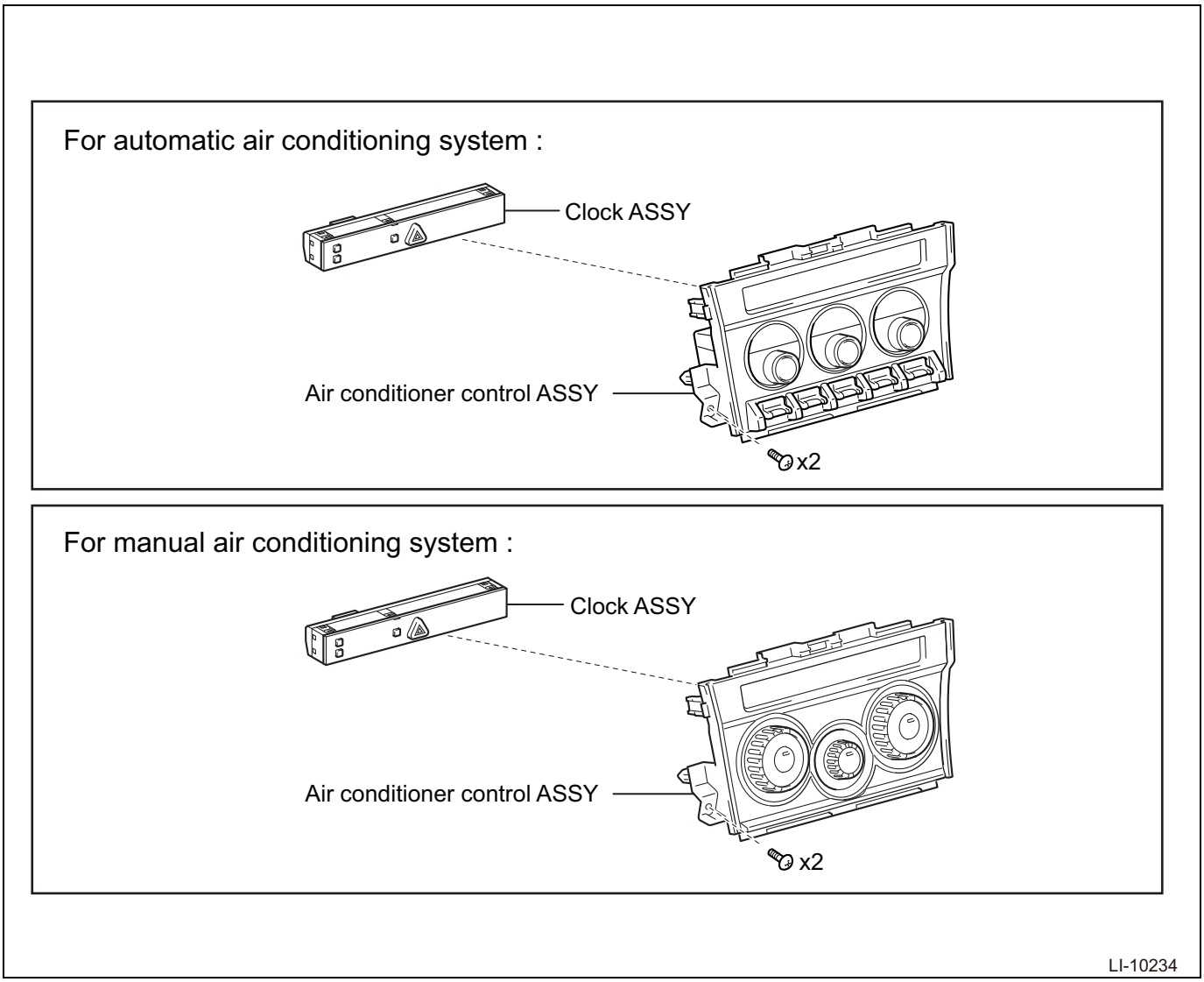

Removal

1. Removal of the air conditioner control ASSY (for automatic air conditioning systems) (Refer to AC - 170)
2. Removal of the air conditioner control ASSY (for manual air conditioning systems) (Refer to AC - 174)

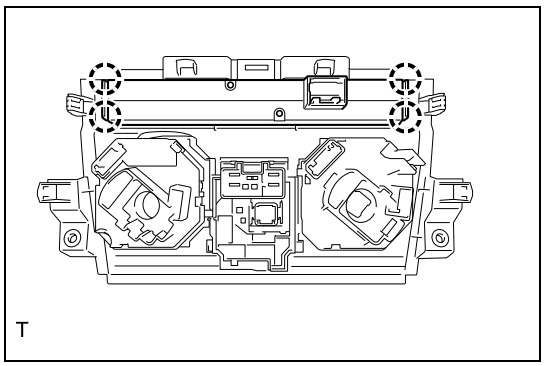

3. Removal of the clock ASSY
   (1) Release 4 claws and remove the clock ASSY from the air conditioner control ASSY.

Installation

1. Installation of the clock ASSY
   (1) Engage 4 claws and install the clock ASSY to the air conditioner control ASSY.

2. Installation of the air conditioner control ASSY (for automatic air conditioning systems) (Refer to AC - 171)
3. Installation of the air conditioner control ASSY (for manual air conditioning systems) (Refer to AC - 178)
4. Inspection of airbag warning light (Refer to RS - 53)

Unit inspection

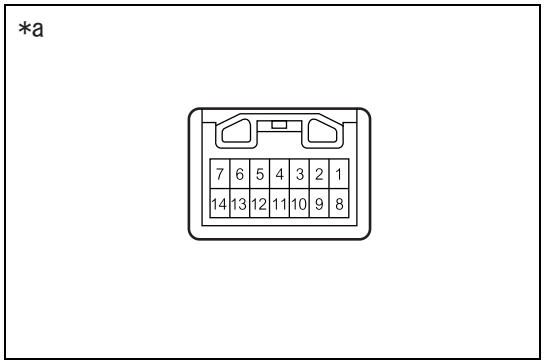

1. Inspection of the clock ASSY
   (1) Check the lighting condition of the passenger's seat belt warning light when the battery is connected to the connector terminals.
   Criteria

Battery connection	Criteria
Battery positive →10 Battery ground →6	The passenger's seat belt warning light turns on.

Captions in illustration

*a	Connector not connected (Clock ASSY)

RS

RS

Seat

Seat heater system
- Function inspection SE-2
- Parts location SE-2
- Symptom table SE-3
- How to troubleshoot SE-4
- Check list for interview SE-5
- Circuit figure SE-6

Front seat ASSY
- Exploded view SE-7
- Removal SE-11
- Disassembly SE-12
- Assembly SE-19
- Installation SE-25
- On-vehicle inspection SE-26

Rear seat ASSY
- Exploded view SE-27
- Removal SE-30
- Disassembly SE-33
- Assembly SE-36
- Installation SE-38

Seat heater switch
- Exploded view SE-40
- Removal SE-40
- Installation SE-41
- Unit inspection SE-41

Seat cushion heater
- Unit inspection SE-43

Seat backrest heater
- Components SE-44
- Removal SE-45
- Inspection SE-46
- Installation SE-46

Seat heater system

Function inspection

1. Operation check of the seat heater
   (1) Turn the ignition switch to ON.
   (2) Check that the indicator light illuminates by turning the seat heater switch ON, and the seat surface of the front seat is warmed in approx. 5 minutes.

Parts location

for LHD:

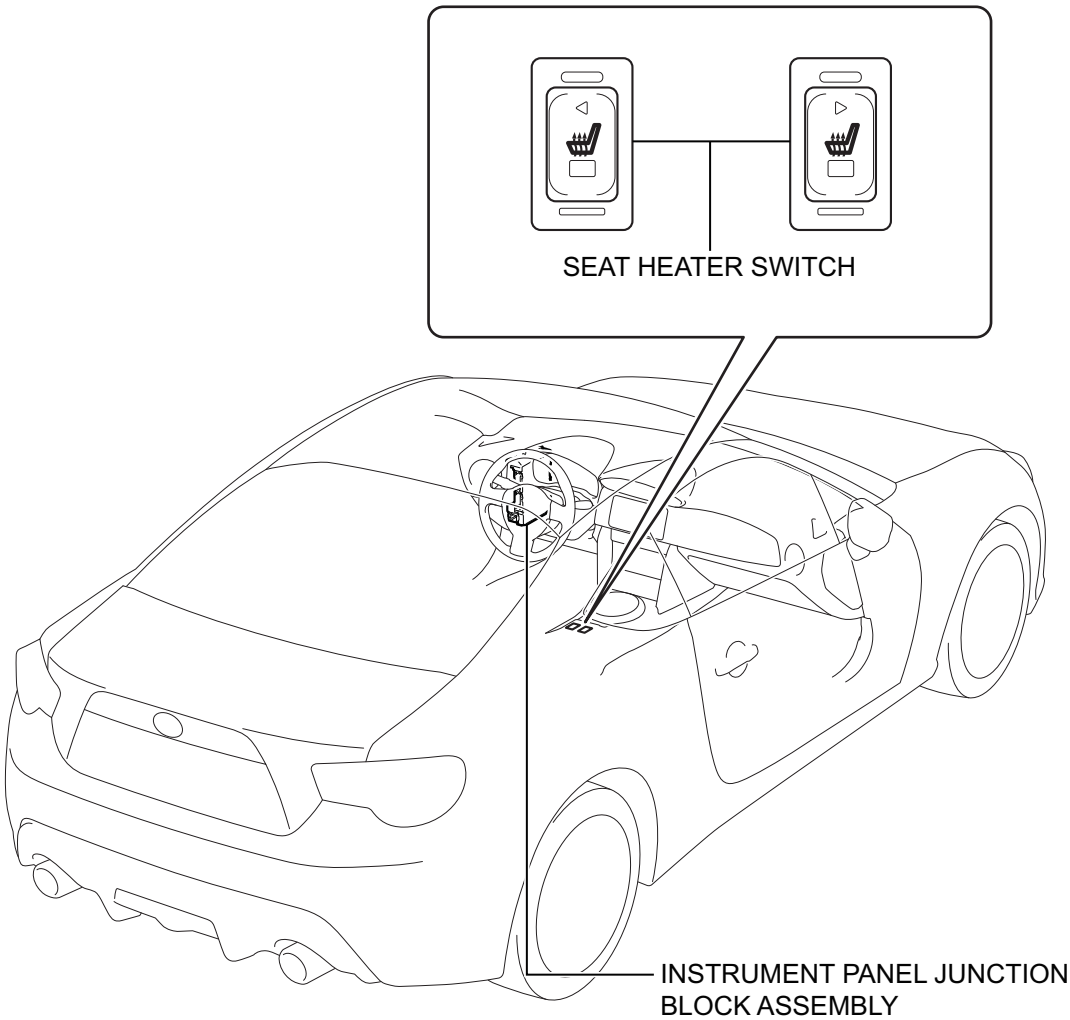

SE-10003

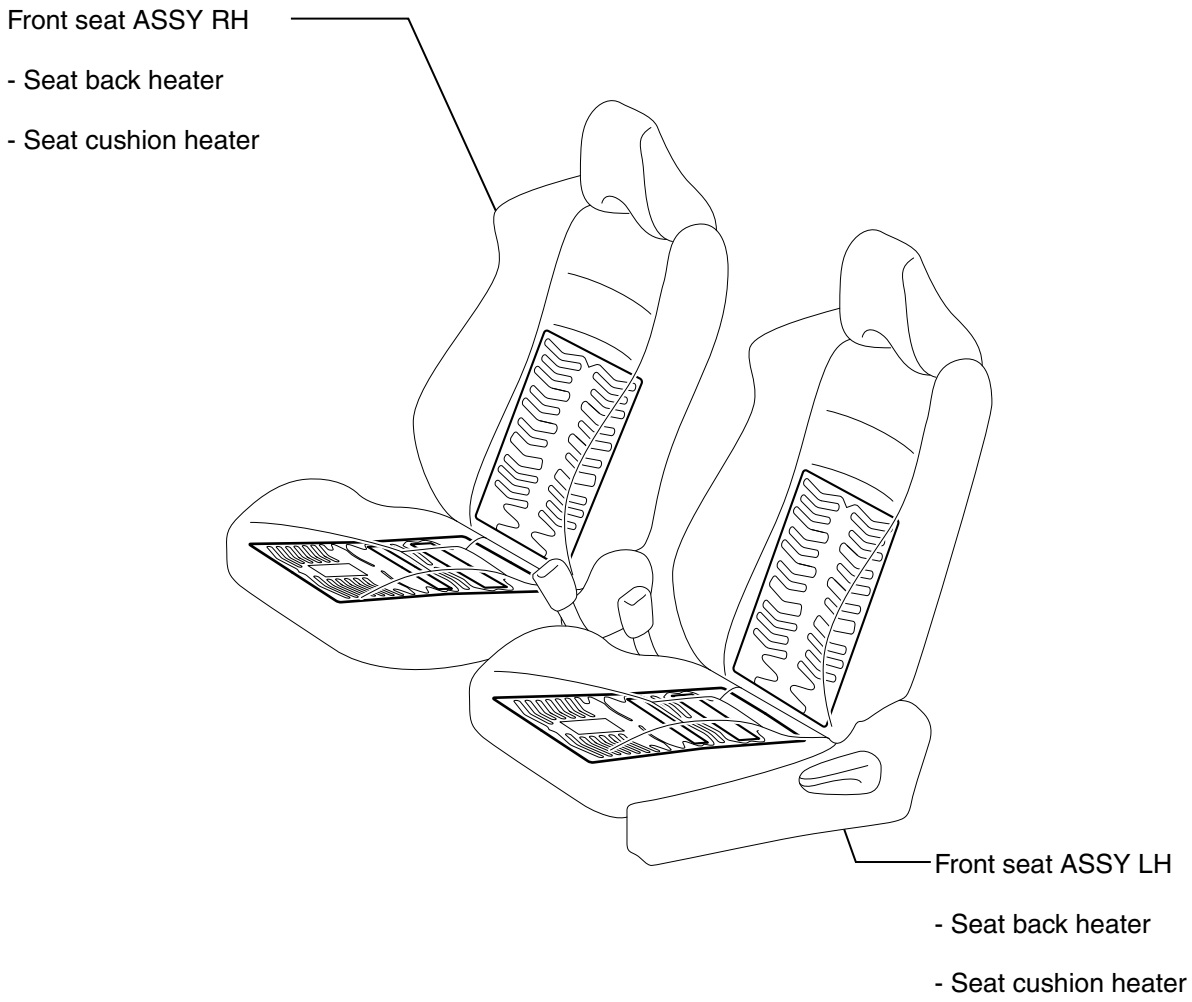

T

SE

Symptom table

Symptoms	Inspection items	Reference pages
Driver's seat heater does not operate (the seat does not warm up).	SEAT HTR RH fuse	-
	Seat heater switch	SE - 41
	Front seat ASSY RH	SE - 26
	Vehicle wiring harness and connector	-
Passenger's seat heater does not operate (the seat does not warm up).	SEAT HTR LH fuse	-
	Seat heater switch	SE - 41
	Front seat ASSY LH	SE - 26
	Vehicle wiring harness and connector	-

How to troubleshoot

1	Bring in the car

Next

2	Interview and phenomenon check

(1) Perform the interview and phenomenon check (Refer to SE - 5)

Next

3	Symptom table

(1) Check the symptom table. (Refer to SE - 3)

Result

Result	Go to
Not applicable to the symptom table.	A
Applicable to the symptom table.	B

B → Go to Step 5.

A

SE

4	Based on the trouble phenomenon, perform troubleshooting following the steps below.

(1) Function inspection (Refer to SE - 2)
(2) Unit inspection

Next

5	Adjustment, repair, or replacement

Next

6	Confirmation test

Next

Complete

Check list for interview

Seat Heater System Diagnosis Checklist for Interview

Year/date of vehicle bring-in Year Month Date

Name				Registration No.		First registration	Year Month Date
				Vehicle model		Frame No.	
Front		Engineer		Engine type		Odometer reading	km

Customer specified content

Date when trouble occurred (from when)	Year Month Date Time
Frequency of occurrence	Continuous Sometimes (times/day, times/month)
Condition of trouble occurrence	

Weather	Fine / Cloudy / Rainy / Snowy / Other ( )	Temperature	Approx. ( ) °C
Road	Inner city Suburbs Highway Others ( )		Paved road / Unpaved road

Trouble symptom	☐ Driver's seat cushion does not warm.
	☐ Driver's seat back does not warm.
	☐ Passenger's seat cushion does not warm.
	☐ Passenger's seat back does not warm.
	☐ Others

SE

Circuit figure

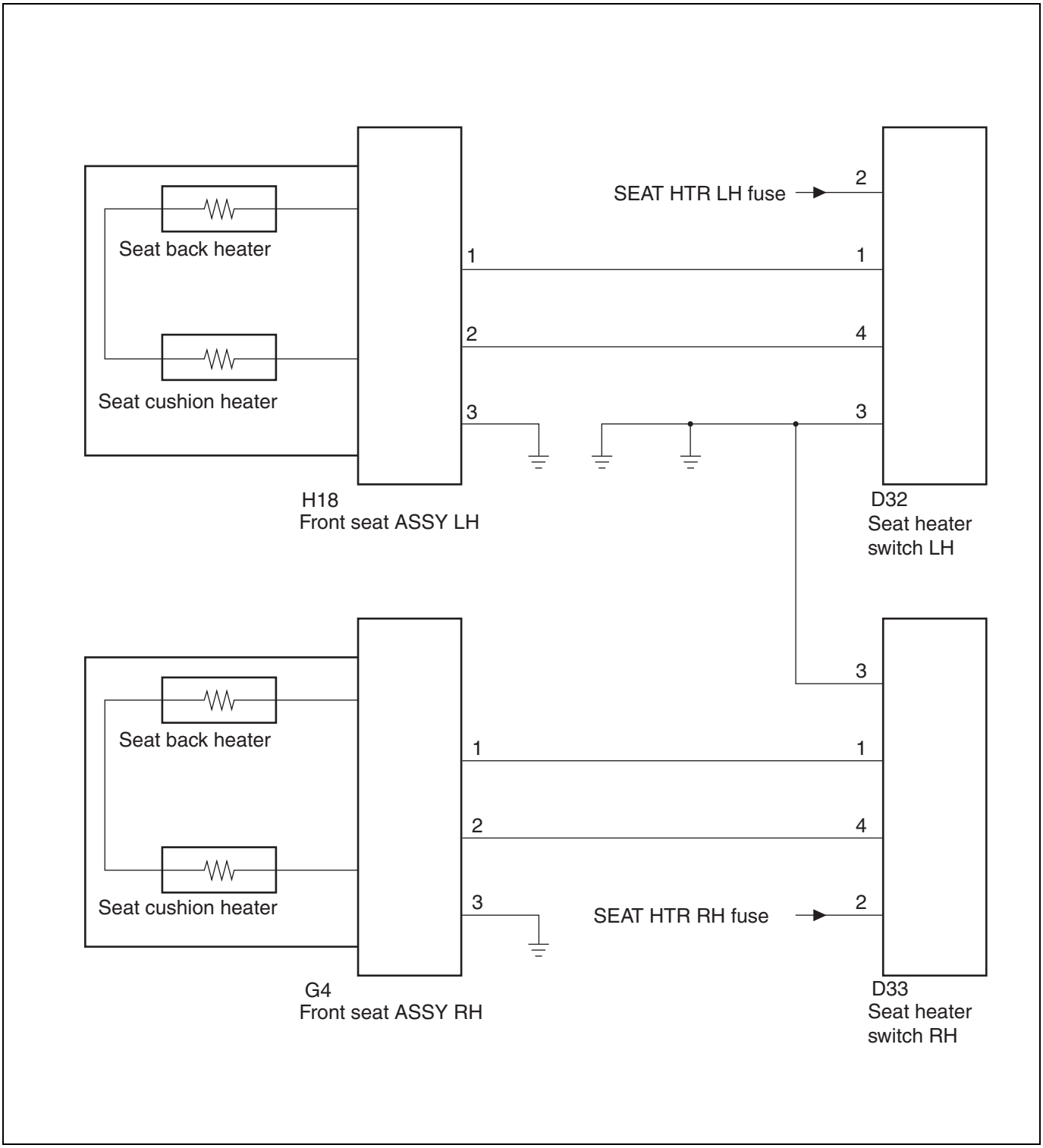

SE

Front seat ASSY

Exploded view

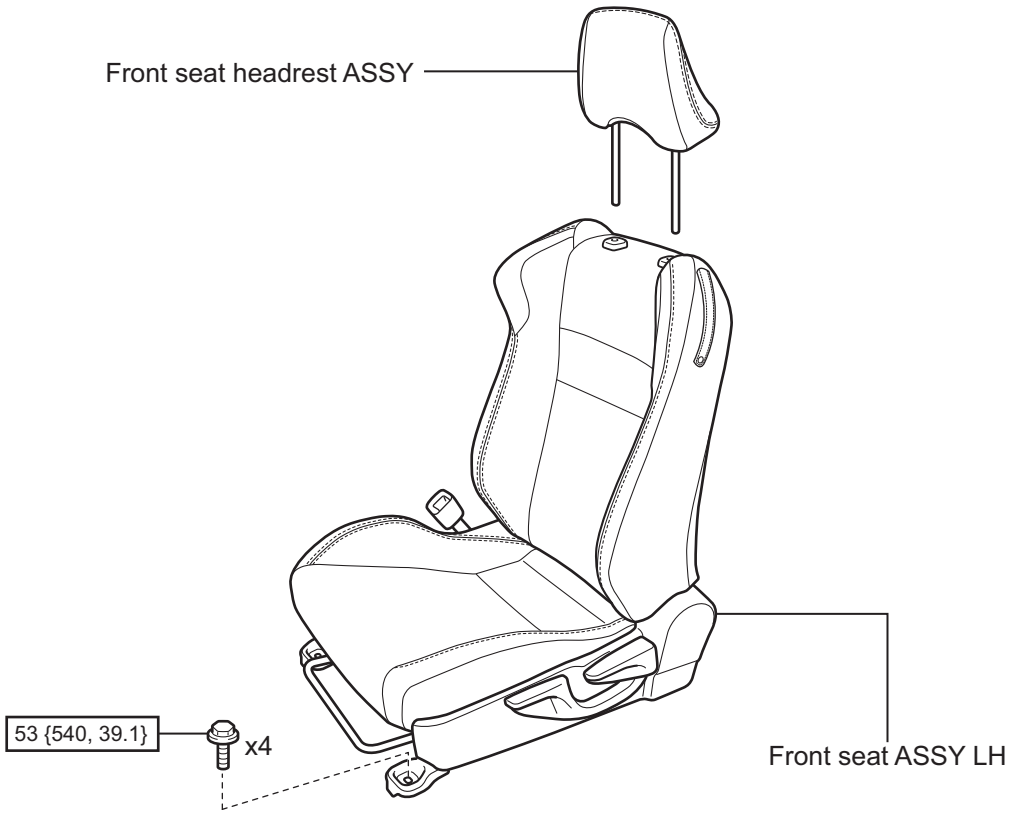

N*m {kgf*cm, ft*lbf}: Tightening torque

SE-10085

SE

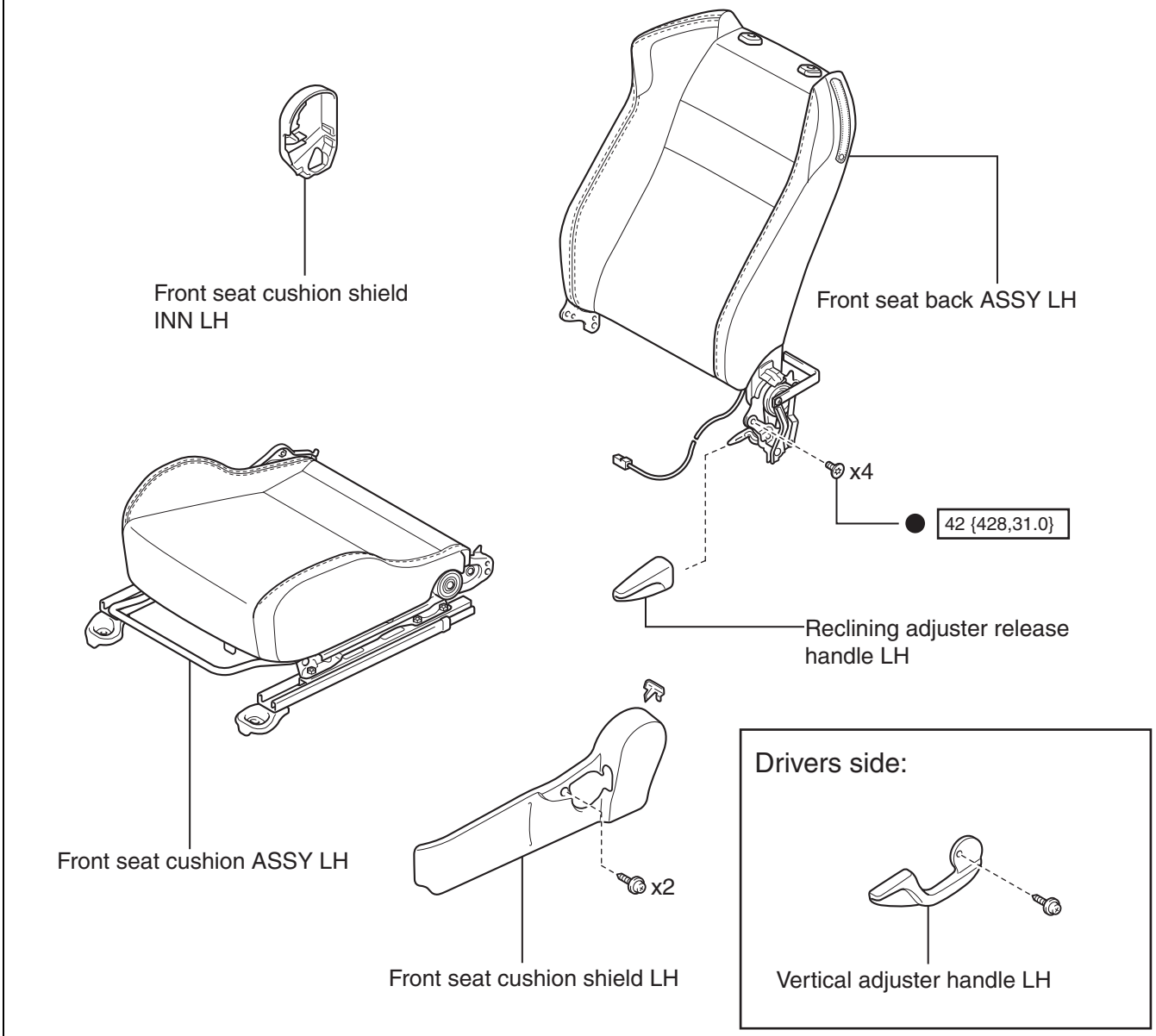

SE

N•m {kgf•cm, ft•lbf} : Tightening torque

● Non-reusable parts

SE-01649

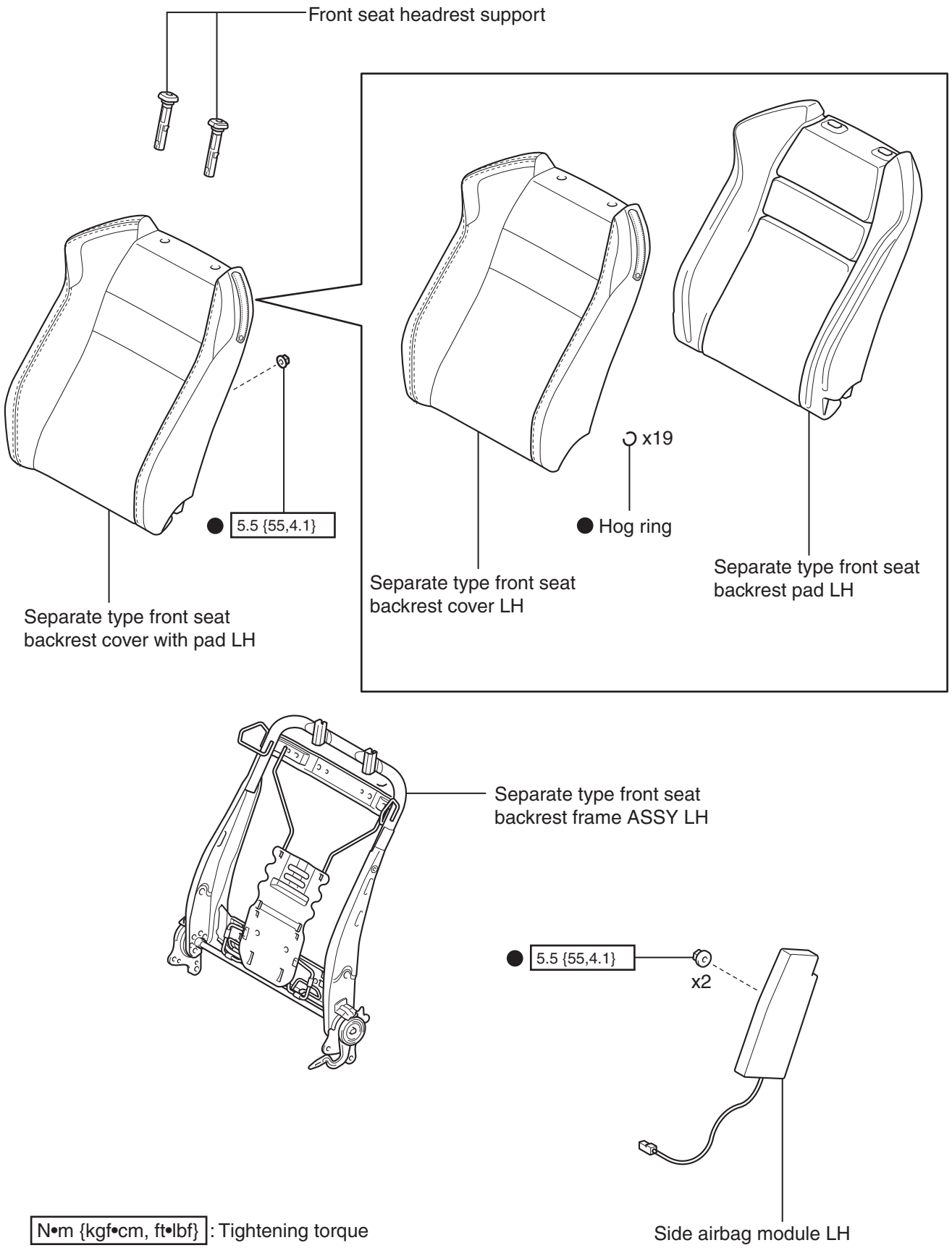

SE

N•m {kgf•cm, ft•lbf} : Tightening torque

● Non-reusable parts

SE-01552

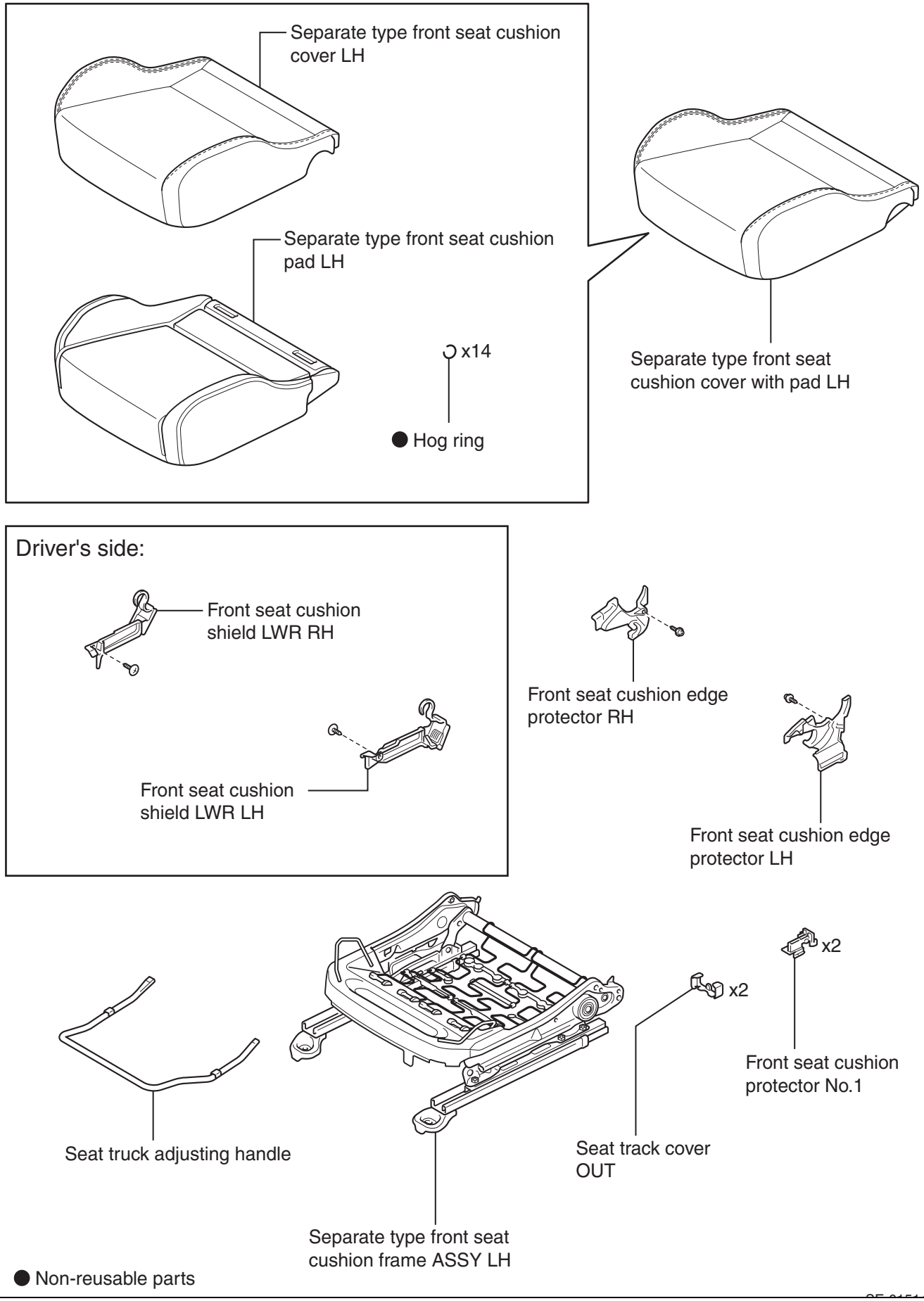
Separate type front seat cushion cover LH
Separate type front seat cushion pad LH
x14
Hog ring
Separate type front seat cushion cover with pad LH
Driver's side:
Front seat cushion shield LWR RH
Front seat cushion shield LWR LH
Front seat cushion edge protector RH
Front seat cushion edge protector LH
x2
x2
Front seat cushion protector No.1
Seat truck adjusting handle
Seat track cover OUT
Separate type front seat cushion frame ASSY LH
Non-reusable parts

SE

Removal

NOTE:

The following procedure is for LH side. Perform the same procedures for the RH side.

1. Precautions

   WARNING:

   - Before starting the work, read the precautions for the SRS airbag system to make sure to properly perform the work. (Refer to RS - 5)
   - If the side airbag module LH has been activated, replace the following parts with new ones: side airbag module ASSY LH, separate type front seat backrest frame ASSY LH, separate type front seat backrest cover LH, and the separate type front seat backrest pad LH.

   CAUTION:

   After turning the ignition switch to OFF, you may have to wait for a while before disconnecting the battery terminals. Check appropriate precautions for battery terminal disconnection before proceeding. (Refer to IN - 6)

2. Disconnection of the battery ground terminal

   WARNING:

   - Turn the ignition switch to OFF, disconnect the battery ground terminal, and then wait for 60 seconds before starting the work.
   - The air bag and pretensioner system are fitted with a backup power supply. If you start the work within 60 seconds after disconnecting the battery ground terminal, the air bag may be activated.

   CAUTION:

   To avoid damage to the molding, be sure to fully open the door glasses on both driver's and passenger's sides.

3. Removal of the front seat headrest ASSY
4. Removal of the front seat ASSY LH
   (1) Slide the front seat ASSY LH to the most front position.

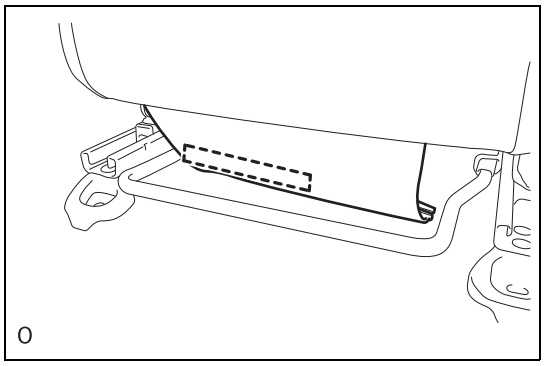

   (2) Release the hook and turn over the front seat cushion cover LH.

   (3) Disconnect the connectors and the wiring harness clamp.

SE

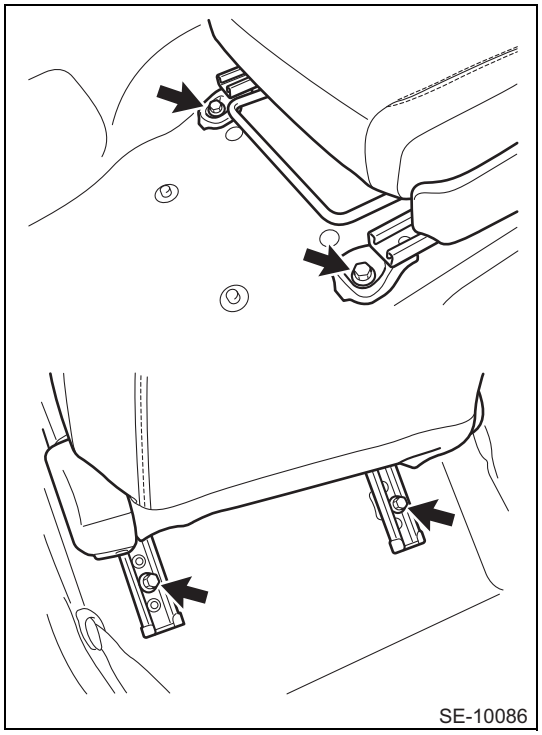

(4) Remove 2 bolts on the rear side of the front seat ASSY LH.

(5) Slide the front seat ASSY LH to the most rear position.

(6) Remove 2 bolts on the front side of the front seat ASSY LH.

(7) Remove the front seat ASSY LH.

CAUTION:

- The front seat ASSY LH must be carried out of the vehicle with the front seat headrest ASSY removed, by more than one personnel.
- Be careful not to damage the front seat ASSY LH, the body exterior and interior.

SE

Disassembly

CAUTION:

(Passenger's seat only)

- The occupant detection control module, occupant detection sensor, front seat cushion pad and front seat cushion frame ASSY are assembled as a front cushion & frame ASSY. Therefore, never remove the occupant detection control module or the occupant detection sensor as a single unit.
- Never disconnect the connector of the occupant detection sensor from the occupant detection control module.
- When replacing the front seat cushion cover, be careful not to damage the occupant detection sensor during hog ring installation.
- Check if the occupant detection system is working normally after removing or replacing a front seat cushion cover or replacing the occupant detection system.

NOTE:

The following procedure is for LH side. Unless otherwise specified, perform the work for the RH side referring to the procedures for the LH side.

1. Removal of the reclining adjuster release handle LH

(1) Pull up the reclining adjuster release handle LH.

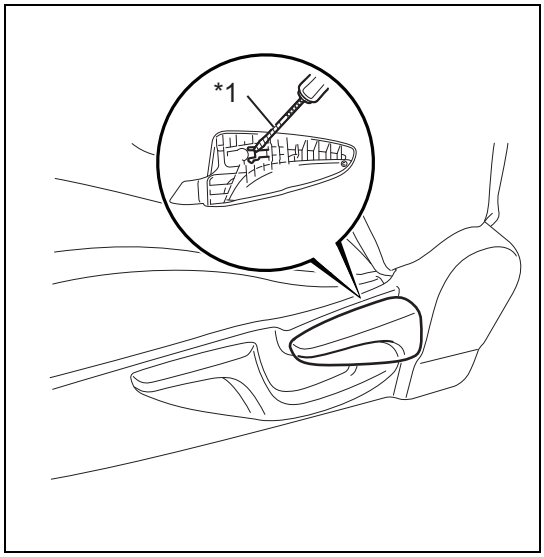

(2) As shown in the figure, release the claw by using the fine flat tip screwdriver wrapped with protective tape, and remove the reclining adjuster release handle LH.

Captions in illustration

*1	Protective tape

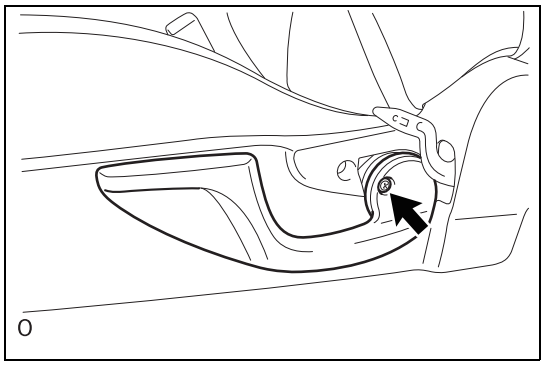

2. Removal of the vertical adjuster handle LH (driver's side)
   (1) Remove the screw and remove the vertical adjuster handle LH.

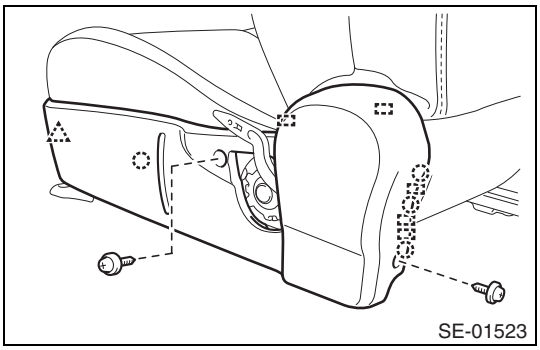

3. Removal of the front seat cushion shield LH
   (1) Remove 2 screws.
   (2) Release 4 claws, 5 guides, and the clip, and remove the front seat cushion shield LH.

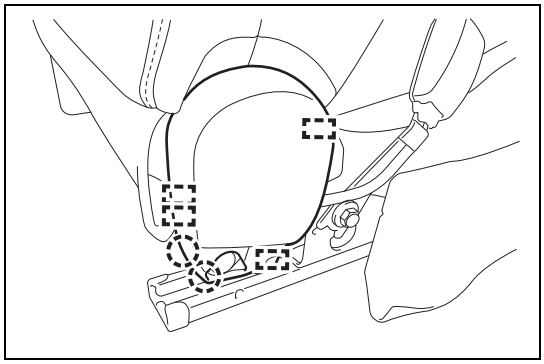

4. Removal of the front seat cushion shield INN LH
   (1) Release 2 claws, 4 guides, and the clip, and remove the front seat cushion shield INN LH.

5. Removal of the front seat inner belt ASSY LH (Refer to SB - 22)

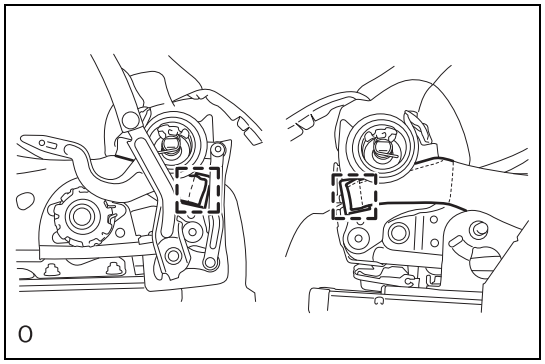

6. Removal of the front seat backrest ASSY LH
   (1) Release 2 hooks.

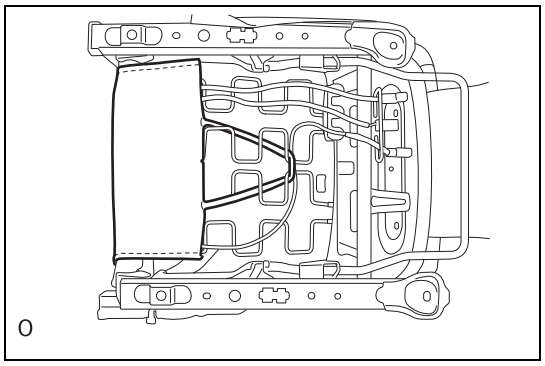

(2) Remove the rubber band of the separate type front seat backrest cover LH.

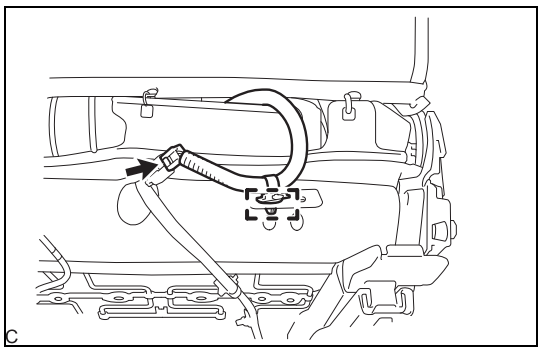

(3) Disconnect the connector and the clamp of the seat heater. (For the model with the seat heater)

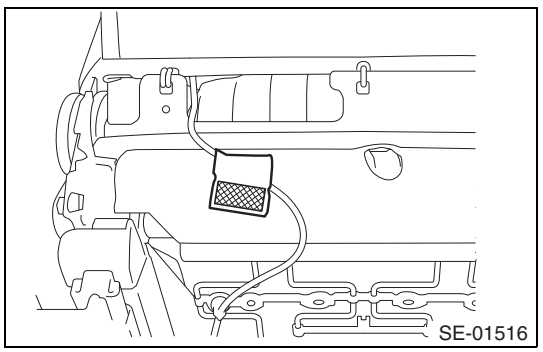

(4) Release the fastener and disconnect the wiring harness of the side airbag module LH.

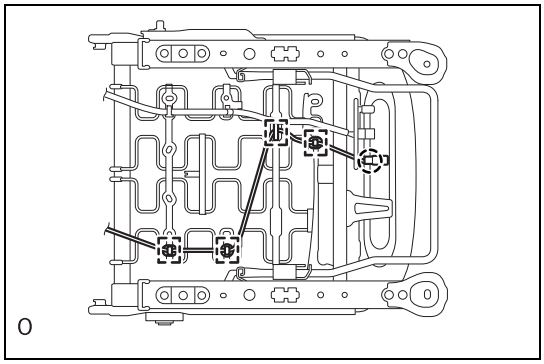

(5) Release the claw and 4 clamps, and disconnect the wiring harness of the side airbag module ASSY LH.

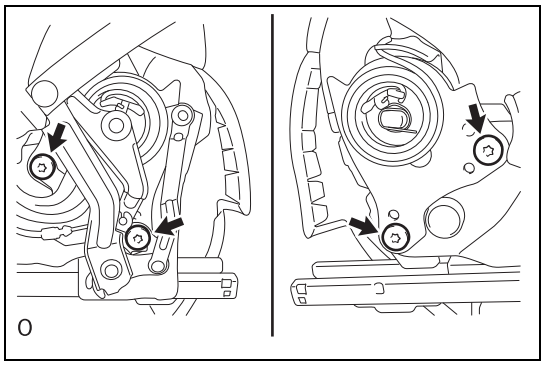

(6) Using the torque socket wrench (T40), remove 4 bolts, and remove the front seat backrest ASSY LH from the front seat cushion ASSY LH.

7. Removal of the separate type front seat backrest cover with pad

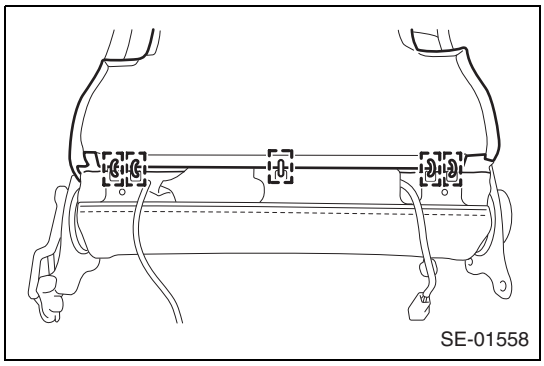

(1) Remove 5 hog rings.

SE

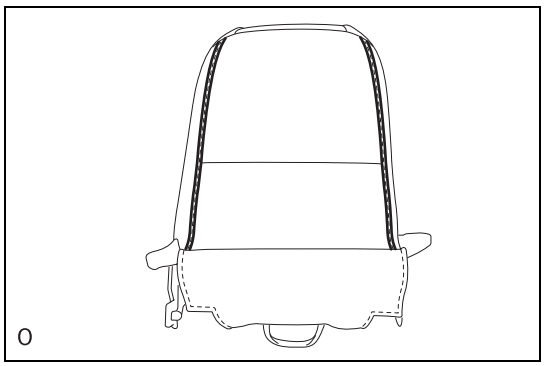

(2) Open 2 fasteners.
(3) Turn over the separate type front seat backrest cover LH.

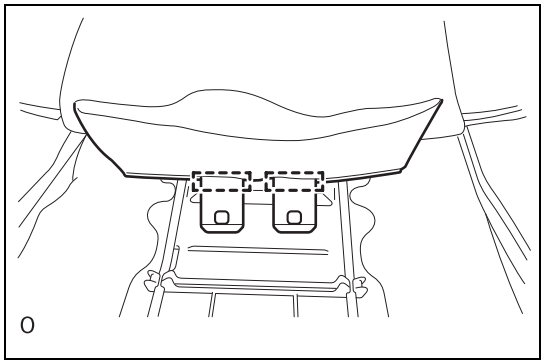

(4) Release 2 hooks.

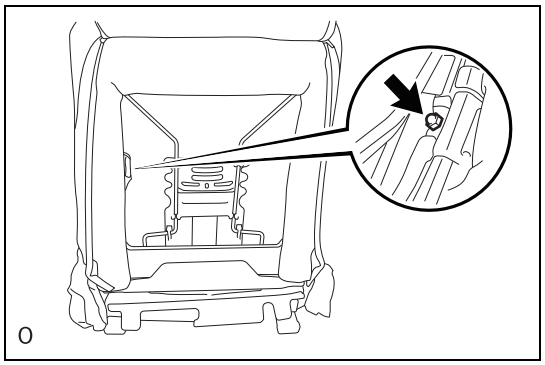

(5) Remove the nut, and disconnect 3 brackets of the separate type front seat backrest cover LH.

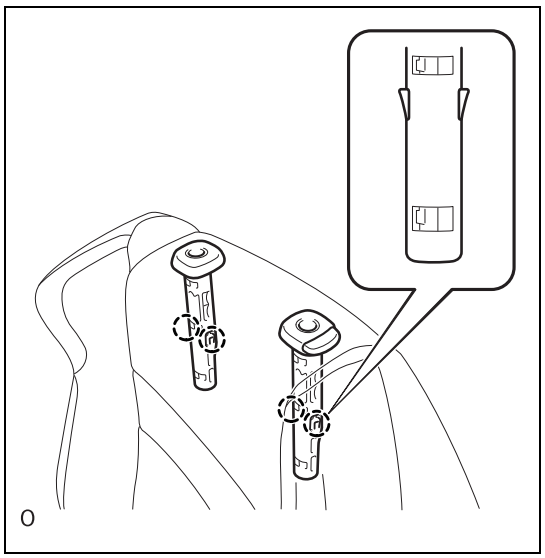

(6) Release 4 claws and remove 2 front seat headrest supports.
(7) Remove the separate type front seat backrest cover with pad from the separate type front seat backrest frame ASSY LH.

SE

8. Removal of the side airbag module LH (Refer to RS - 261)

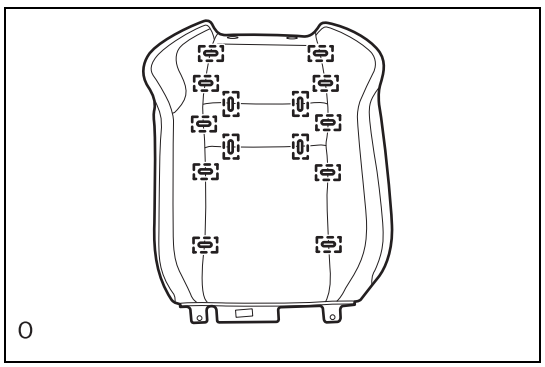

9. Removal of the separate type front seat backrest cover LH
(1) Remove 14 hog rings, and remove the separate type front seat backrest cover LH from the separate type front seat backrest pad LH.

10. Removal of the separate type front seat cushion cover with pad

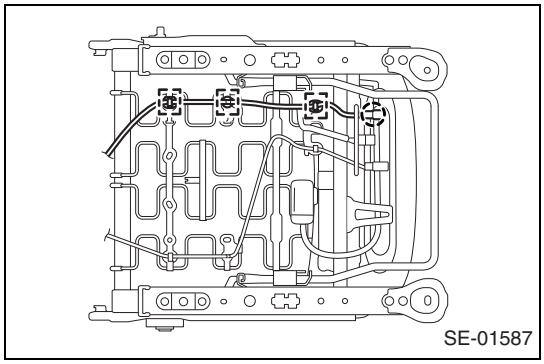

(1) Release the claw and 3 clamps, and disconnect the wiring harness of the seat heater. (For the model with the seat heater)

(2) Release the hooks, and remove the separate type front seat cushion cover with pad from the separate type front seat cushion frame ASSY LH. (driver's side)

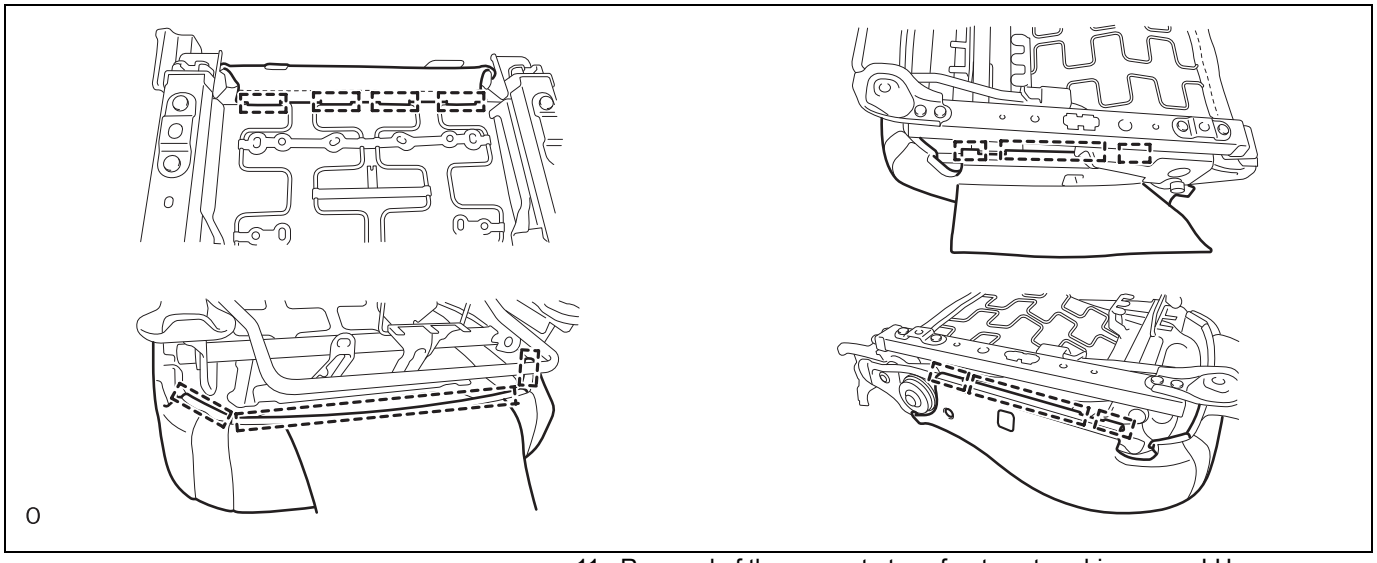

O

11. Removal of the separate type front seat cushion cover LH

(1) Remove 2 hog rings.

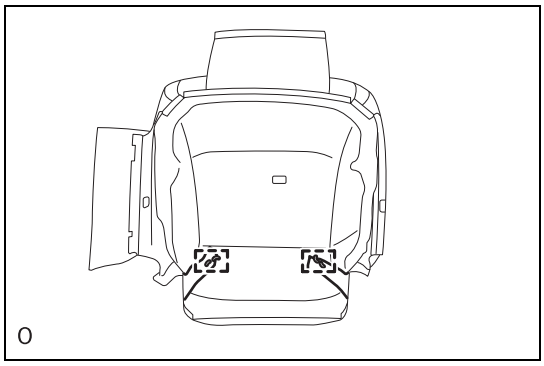

O

(2) Remove 12 hog rings, and remove the separate type front seat cushion cover LH from the separate type front seat cushion pad LH.

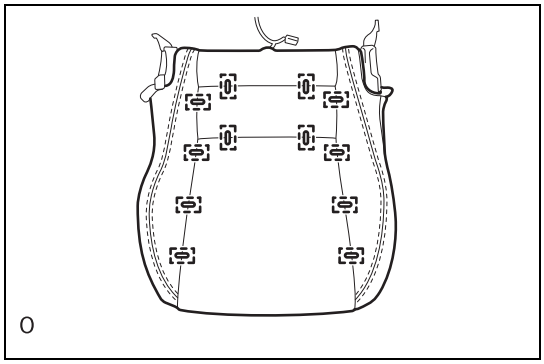

O

SE

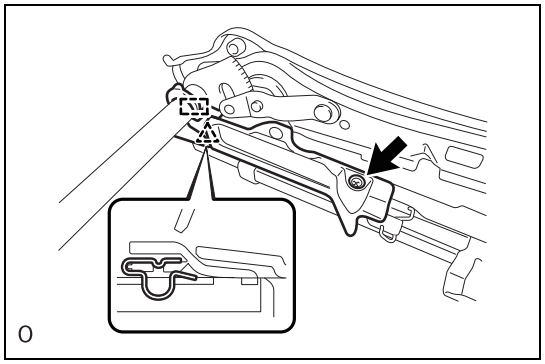

12. Removal of the front seat cushion shield LWR LH (driver's side)
    (1) Remove the screw.
    (2) Release the hook.
    (3) Release the clip, and remove the front seat cushion shield LWR LH.

13. Removal of the front seat cushion shield LWR LH (driver's side)
    NOTE:
    Remove the part in the same manner as RH side.

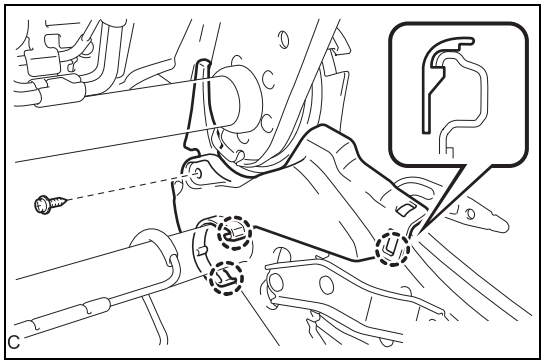

14. Removal of the front seat cushion edge protector LH
    (1) Remove the screw.
    (2) Release 3 claws and remove the front seat cushion edge protector LH.

15. Removal of the front seat cushion edge protector LH
    NOTE:
    Remove the part in the same manner as RH side.

SE

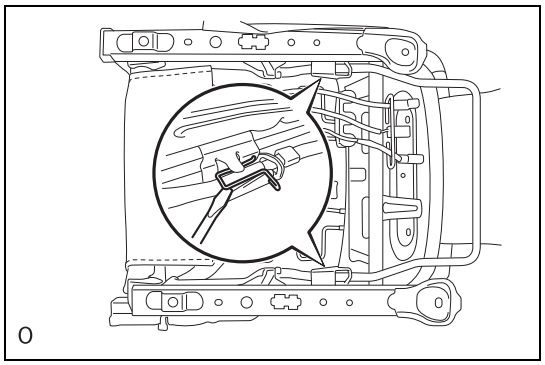

16. Removal of the seat track adjusting handle
    (1) Remove 2 springs with a screwdriver, and remove the seat track adjusting handle from the separate type front seat cushion frame ASSY LH.

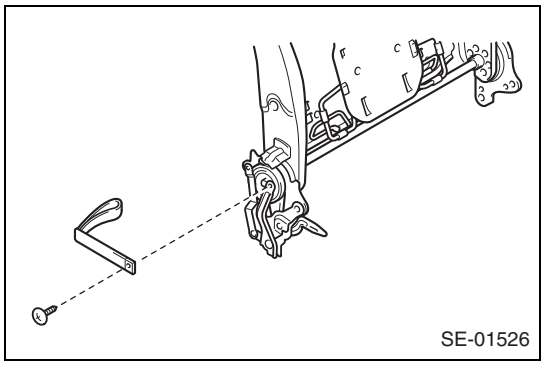

17. Removal of the reclining adjuster release band (Passenger's side)
    (1) Remove the screw and remove the reclining adjuster release band.

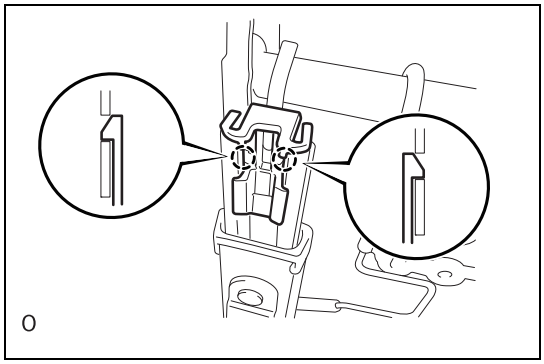

18. Removal of the seat track cover OUT RH
    (1) Release 2 claws and remove the seat track cover OUT RH.
    NOTE:
    Remove both parts using the same procedures.

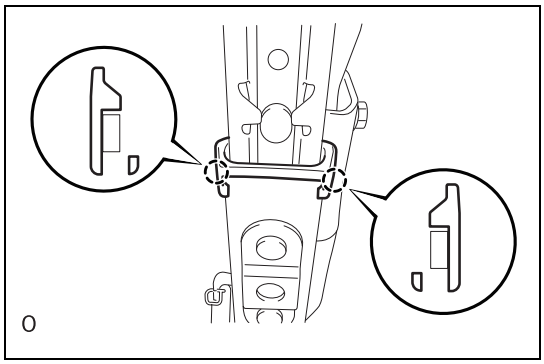

19. Removal of the front seat cushion protector No.1
    (1) Release 2 claws and remove the front seat cushion protector No.1.
    NOTE:
    Remove both parts using the same procedures.

Assembly

NOTE:
The following procedure is for LH side. Perform the same procedures for the RH side.

1. Installation of the seat track cover OUT LH
   (1) Engage 2 claws and install the seat track cover OUT LH.
   NOTE:
   Install both parts using the same procedures.
2. Installation of the front seat cushion protector No.1
   (1) Engage 2 claws and install the front seat cushion protector No.1.
   NOTE:
   Install both parts using the same procedures.
3. Installation of the reclining adjuster release band
   (1) Remove the screw and install the reclining adjuster release band.
4. Installation of the seat track adjusting handle
   (1) Install the seat track adjusting handle to the separate type front seat cushion frame ASSY RH.
   CAUTION:
   - Install the rear end of the seat track adjusting handle to the upper side of the seat track lever.
   - Securely install 2 springs to the groove of the seat track adjusting handle.
5. Installation of the front seat cushion edge protector RH
   (1) Engage 3 claws and install the front seat cushion edge protector RH of the RH seat.
   (2) Install the screws.
6. Installation of the front seat cushion edge protector LH
   NOTE:
   Install the part in the same manner as RH side.

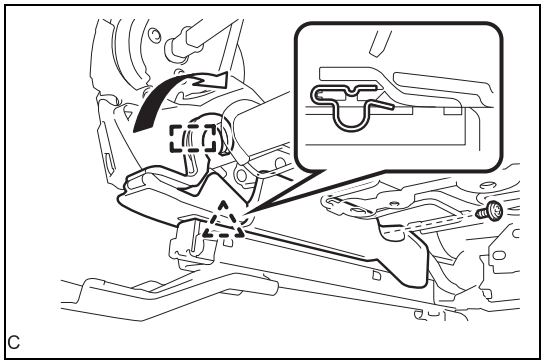

7. Installation of the front seat cushion shield LWR RH (driver's side)
   (1) Temporally install the front seat cushion shield LWR RH with the clip.
   (2) Engage the hook.
   (3) Install the front seat cushion shield LWR RH with the screw.

8. Installation of the front seat cushion shield LWR LH (driver's side)
   NOTE:
   Install the part in the same manner as RH side.

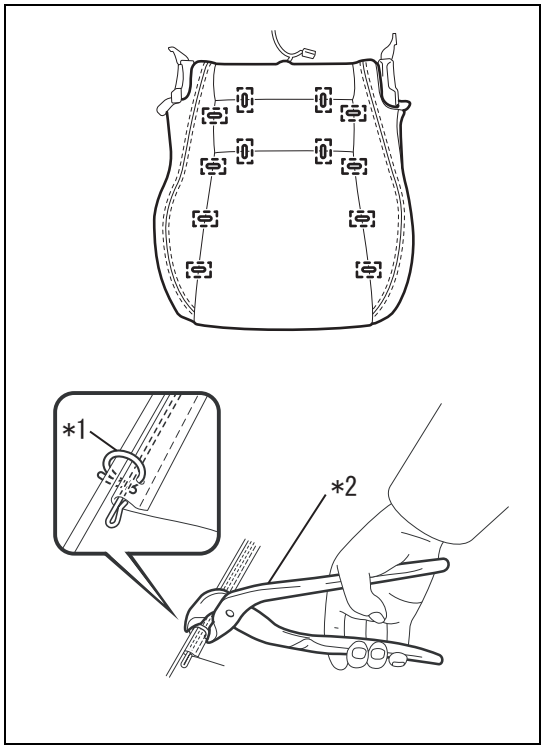

9. Installation of the separate type front seat cushion cover LH
   (1) Using hog ring pliers and 12 new hog rings, install the separate type front seat cushion cover LH to the separate type front seat cushion pad LH.
   CAUTION:
   - Be careful not to dirty or damage the separate type front seat cushion cover LH.
   - Align the centers of the fabric and the separate type front seat cushion pad LH taking care not to make wrinkles, and attach the hog rings.

   NOTE:
   If the separate type front seat cushion cover LH for replacement is not provided with the retracting wire, reuse the original wire.

Captions in illustration

*1	New hog ring
*2	Hog ring pliers

SE

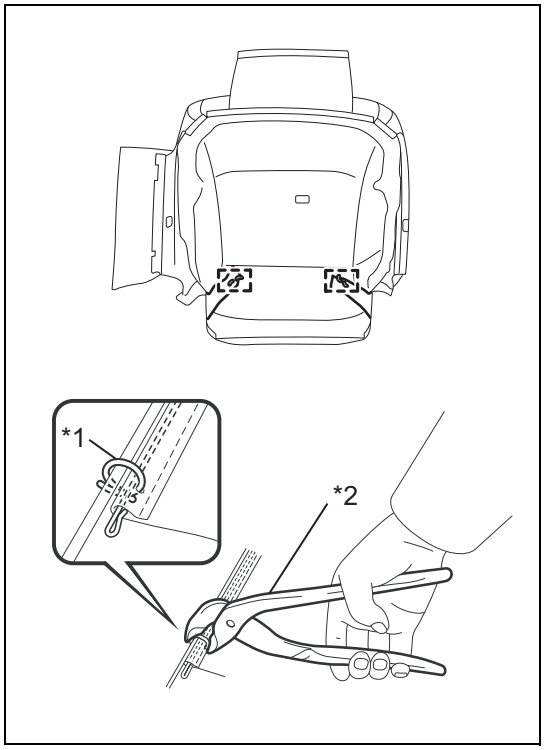

(2) Using hog ring pliers, attach 2 new hog rings.
CAUTION:
Be careful not to dirty or damage the separate type front seat cushion cover LH.

Captions in illustration

*1	New hog ring
*2	Hog ring pliers

10. Installation of the separate type front seat cushion cover with pad
    (1) Engage the hooks, and install the separate type front seat cushion cover with pad to the separate type front seat cushion frame ASSY LH.
    (2) Engage the claw and 3 clamps, and connect the wiring harness of the seat heater. (For the model with the seat heater)
11. Installation of the separate type front seat backrest cover LH
    CAUTION:
    - If the separate type front seat backrest cover LH is torn or frayed, the side airbag module LH may not be activated properly. In this case, replace the separate type front seat backrest cover LH with a new one.
    - If the separate type front seat backrest cover LH is not installed securely, the side airbag module LH may not be activated properly. Therefore, keep strictly to the following procedures.

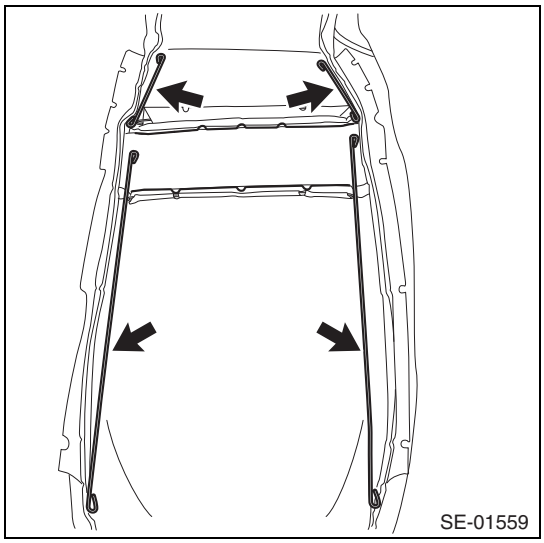

(1) Remove the 4 vertical tension wires that come inserted in the seat backrest cover to facilitate installation.

SE

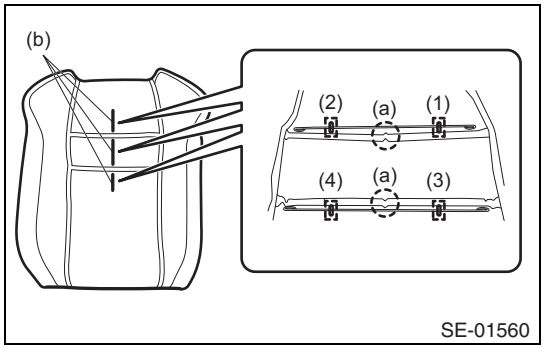

(2) Align the V notches (a) on the seat backrest cover center section with the guidelines (b) on the seat center, and secure with hog rings in order from (1) to (4).

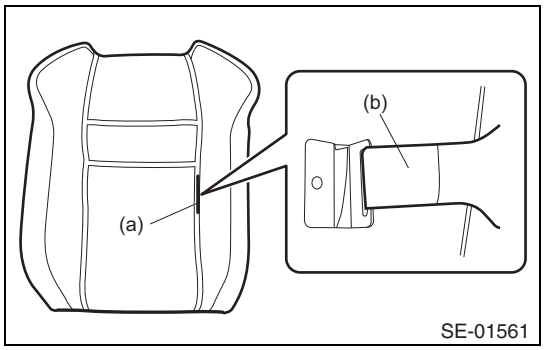

(3) Insert the vertical tension wires into the vertical support sleeve of the seat cover, and pass the woven fabric reinforcement (b) for the side airbag through the pad hole (a).

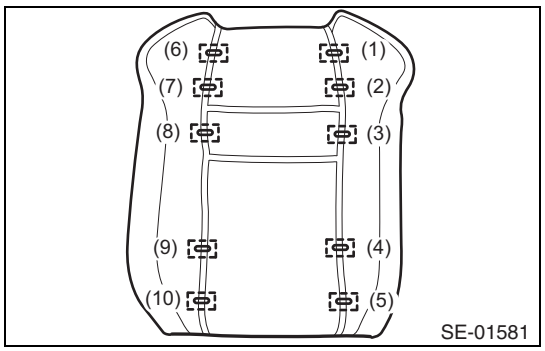

(4) Secure (1) to (5) with hog rings, and once you have firmly installed the seat cover outer side, secure (6) to (10) with hog rings, and firmly install the seat backrest cover inner side.

CAUTION:

- Be careful not to dirty or damage the separate type front seat backrest cover RH.
- Align the centers of the fabric and the separate type front seat backrest pad RH, taking care not to make wrinkles, and attach the hog rings.

NOTE:

If the separate type front seat backrest cover RH for replacement is not provided with the retracting wire, reuse the original wire.

12. Installation of the side airbag module RH (Refer to RS - 262)
13. Installation of the separate type front seat backrest cover with pad

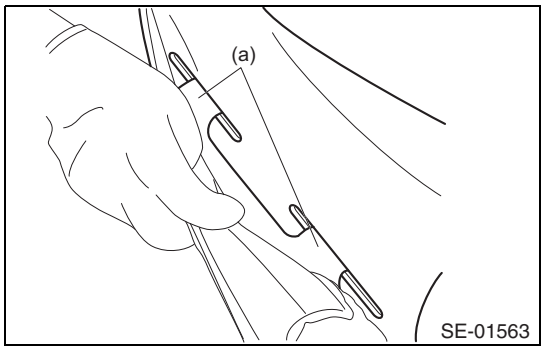

(1) Install the separate type front seat backrest cover with pad on the separate type front seat backrest frame ASSY RH.

(2) Pass the side airbag woven fabric reinforcements (a) through the pad slits.

SE

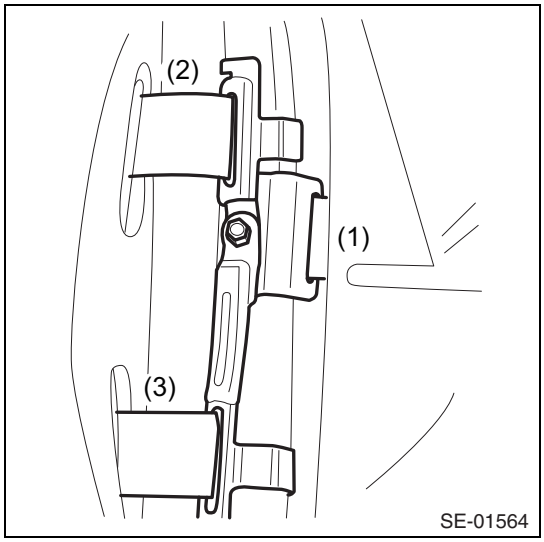

(3) Set the woven fabric reinforcements, in numbered order, on the side frame stud bolt, and tighten them.
Standard value:T=5.5N·m {56kgf·cm} {4.1ft·lbf}
WARNING:
- When installing the brackets, check that the band is not twisted.
- Wrap the side airbag module RH with the band, then install the brackets.
- If the brackets are not installed securely, the side airbag module RH may not be activated properly.

(4) Engage 4 claws and install 2 front seat headrest supports.

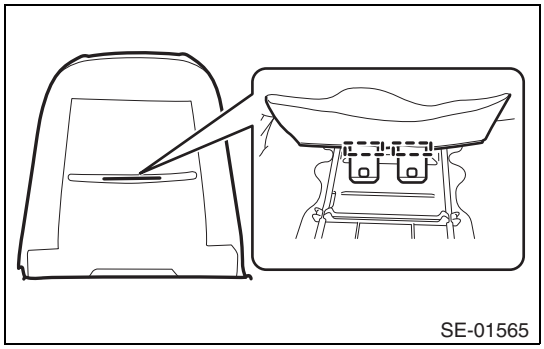

(5) Pass the plastic hook on the back of the seat backrest cover through the felt, and insert it into the plastic mat of the frame until it clicks.

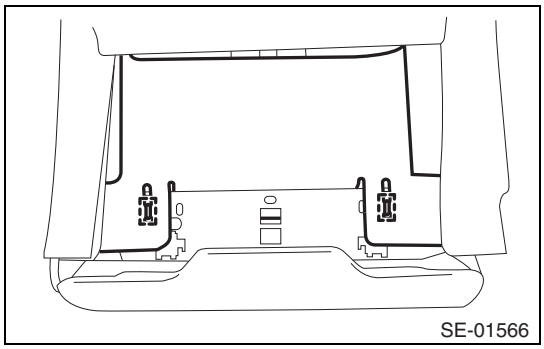

(6) Insert the center part of the back felt into the frame interior, and secure the felt to the frame with a hog ring.
CAUTION:
Check thoroughly that the PAD is not caught on the edge of the frame.

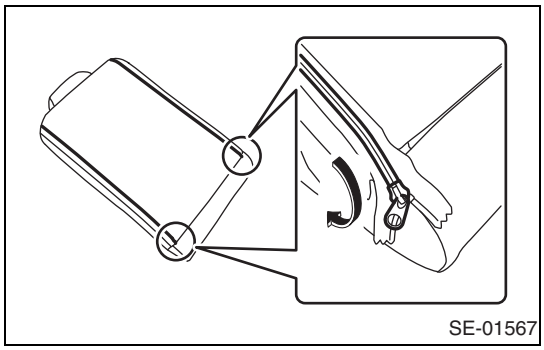

(7) Close the fasteners on both sides, and put the fastener terminals on the back of the seat backrest cover.
CAUTION:
- Do not close the fasteners while pressing the slider. This may cause faulty engagement of the fasteners.
- If there is poor engagement, go back to the position where the fasteners are engaged correctly, and close the fasteners again.

NOTE:
If the separate type front seat backrest cover RH for replacement is not provided with the retracting wire, reuse the original wire.

(8) Secure the hog rings in order from (1) to (5).
CAUTION:
- When performing the securing operation using the hog rings on both sides, insert the gap covers under and fasten 2 hog rings together.
- Do not hook the gap covers on the frame.
- When pulling in the PAD lower edge, be careful not to tear the surface leather.

SE

• Be careful not to dirty or damage the separate type front seat backrest cover RH.

NOTE:

If the separate type front seat backrest cover RH for replacement is not provided with the retracting wire, reuse the original wire.

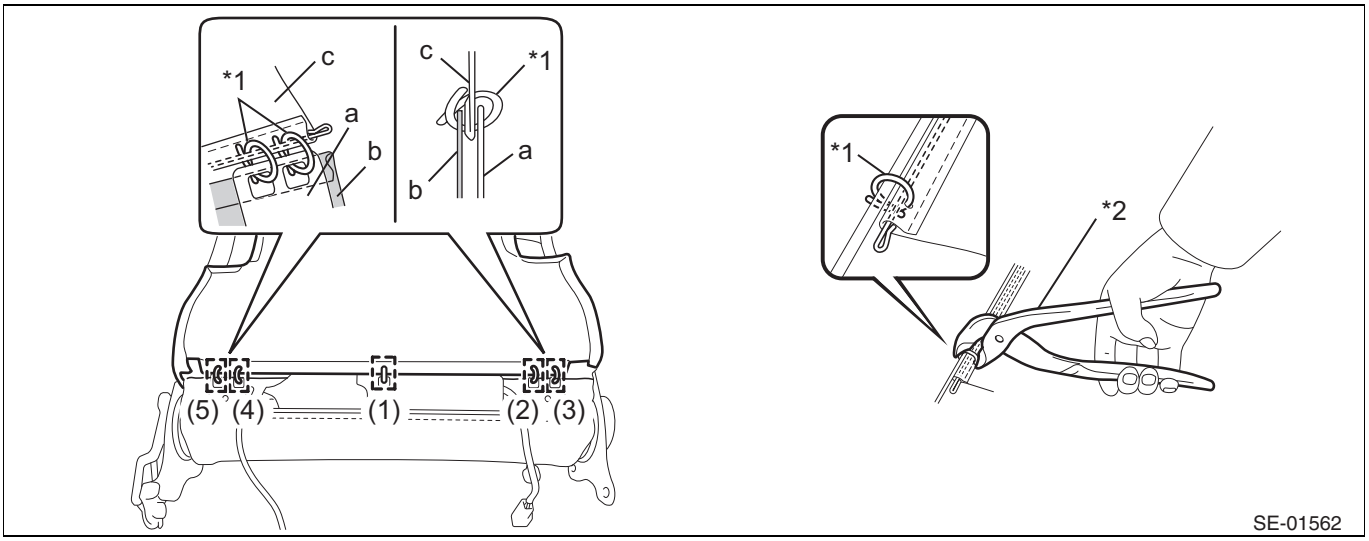

Captions in illustration

*1	New hog ring	*2	Hog ring pliers
*a	Cushion cover	*b	Gap cover
*c	Seat backrest cover		

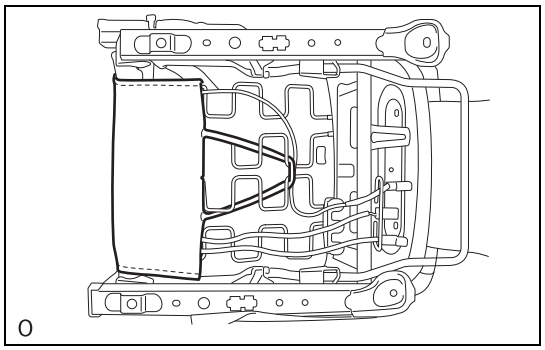

(9) Hook the rubber of the carpet on the spring of the front cushion rear.

14. After assembling the seat cover, if there are any wrinkles, use an iron to finish the seat.

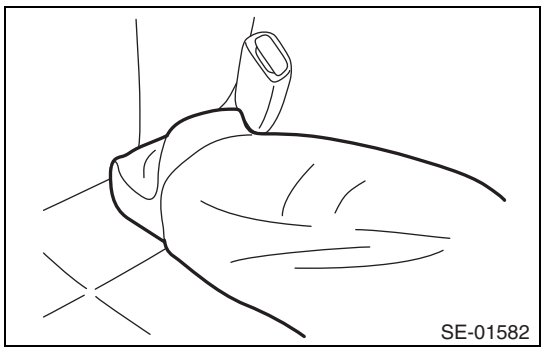

(1) Place a wet towel on the wrinkles.

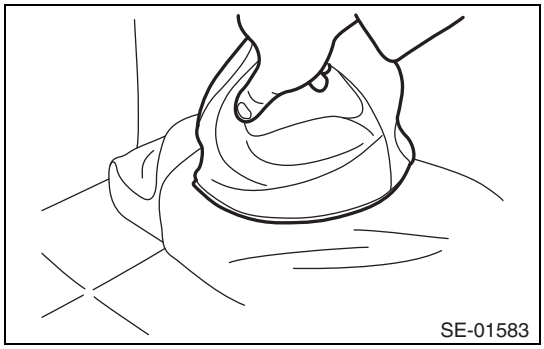

(2) Use the iron which is warmed to a medium temperature.
CAUTION:
Do not stop moving the iron. Doing so will damage the surface leather.

15. Check if there are any tears or frays in the backrest cover or the seat cushion cover.
NOTE:
For seats with a side airbag, if there is a tear or a fray on the door side of the seat cover, the side airbag may not operate properly. Replace the seat cover with a new one.
16. Installation of the front seat backrest ASSY LH
(1) Using the torque socket wrench (T40) and 4 new bolts, install the front seat backrest ASSY LH to the front seat cushion ASSY LH.
Standard value:T=42N·m {428kgf·cm} {31.0ft·lbf}
(2) Engage the claw and 4 clamps, and connect the wiring harness of the side airbag module.
(3) Secure the wiring harness of the side airbag module with the fastener.
(4) Connect the connector and the clamp of the seat heater. (For the model with the seat heater)
(5) Install the rubber band of the separate type front seat backrest cover LH.
(6) Engage 2 hooks.
17. Installation of the front seat inner belt ASSY LH (driver's side) (Refer to SB - 23)
18. Installation of the front seat inner belt ASSY RH (passenger's side) (Refer to SB - 23)
19. Installation of the front seat cushion shield INN LH
(1) Engage 2 claws and 5 guides, and install the front seat cushion shield INN LH.
20. Installation of the front seat cushion shield LH
(1) Engage 4 claws, 5 guides, and the clip, and install the front seat cushion shield LH.
(2) Install the screws.
21. Installation of the vertical adjuster handle LH (driver's side)
(1) Install the vertical adjuster handle LH with the screw.
22. Installation of the reclining adjuster release handle LH
(1) Engage the claw and install the reclining adjuster release handle LH.

SE

Installation

NOTE:
The following procedure is for LH side. Unless otherwise specified, perform the same procedures for the RH side.

1. Installation of the front seat ASSY LH
(1) Return the front seat backrest ASSY to the upright position, and lock it.
(2) Carry in the front seat ASSY LH to the vehicle.
CAUTION:
- The front seat ASSY LH must be carried in to the vehicle with the front seat headrest ASSY removed, by more than one personnel.
- Be careful not to damage the front seat ASSY LH, the body exterior and interior.

(3) Connect the connectors and the wiring harness clamp.
(4) Engage the hook and install the front seat cushion cover LH.
(5) Slide the front seat ASSY LH to the most rear position.

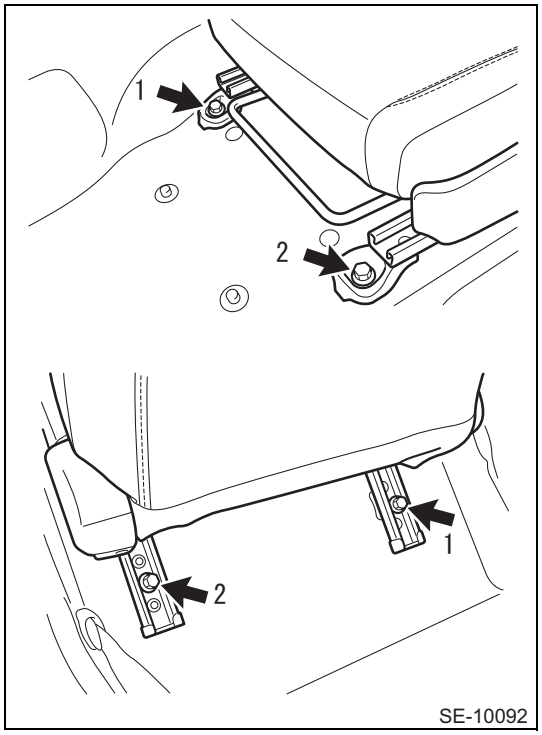

(6) Tighten 2 bolts on the front side of the front seat ASSY LH in the order shown in the figure.
Standard value:T=53N·m {540kgf·cm} {39.1ft·lbf}

(7) Slide the front seat ASSY LH to the most front position.
(8) Tighten 2 bolts on the rear side of the front seat ASSY LH in the order shown in the figure.
Standard value:T=53N·m {540kgf·cm} {39.1ft·lbf}

2. Check of the synchronized locking operation of the slide adjusters
   (1) Check that the right and left adjusters are simultaneously locked when the seat slides.
   (2) If the sliders are not synchronized, loosen the bolts securing the seat and adjust them.
3. Installation of the front seat headrest ASSY
4. Connection of the battery ground terminal
   Standard value:T=6.0N·m {61kgf·cm} {4.4ft·lbf}
5. Function inspection of the seat belt (Refer to SB - 5)
6. Inspection of airbag warning light (Refer to RS - 53)
7. Settings when removing/installing battery terminals (Refer to IN - 10)

SE

On-vehicle inspection

1. Inspection of the front seat ASSY
   (1) Turn the ignition switch to ON.
   (2) Check that the indicator light illuminates by turning the seat heater switch ON, and the seat surface of the front seat ASSY is warmed in approx. 5 minutes.

Rear seat ASSY

Exploded view

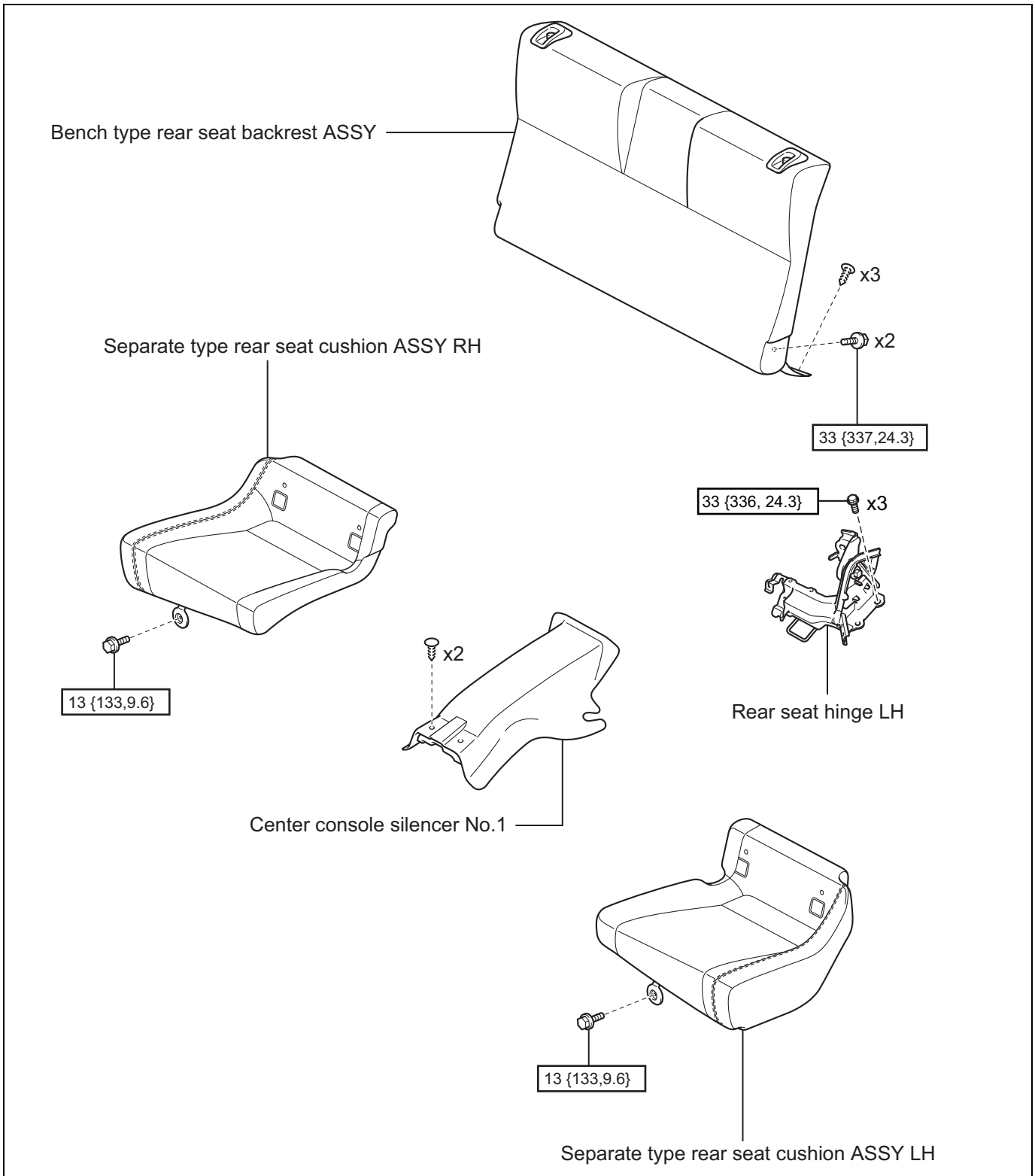

SE

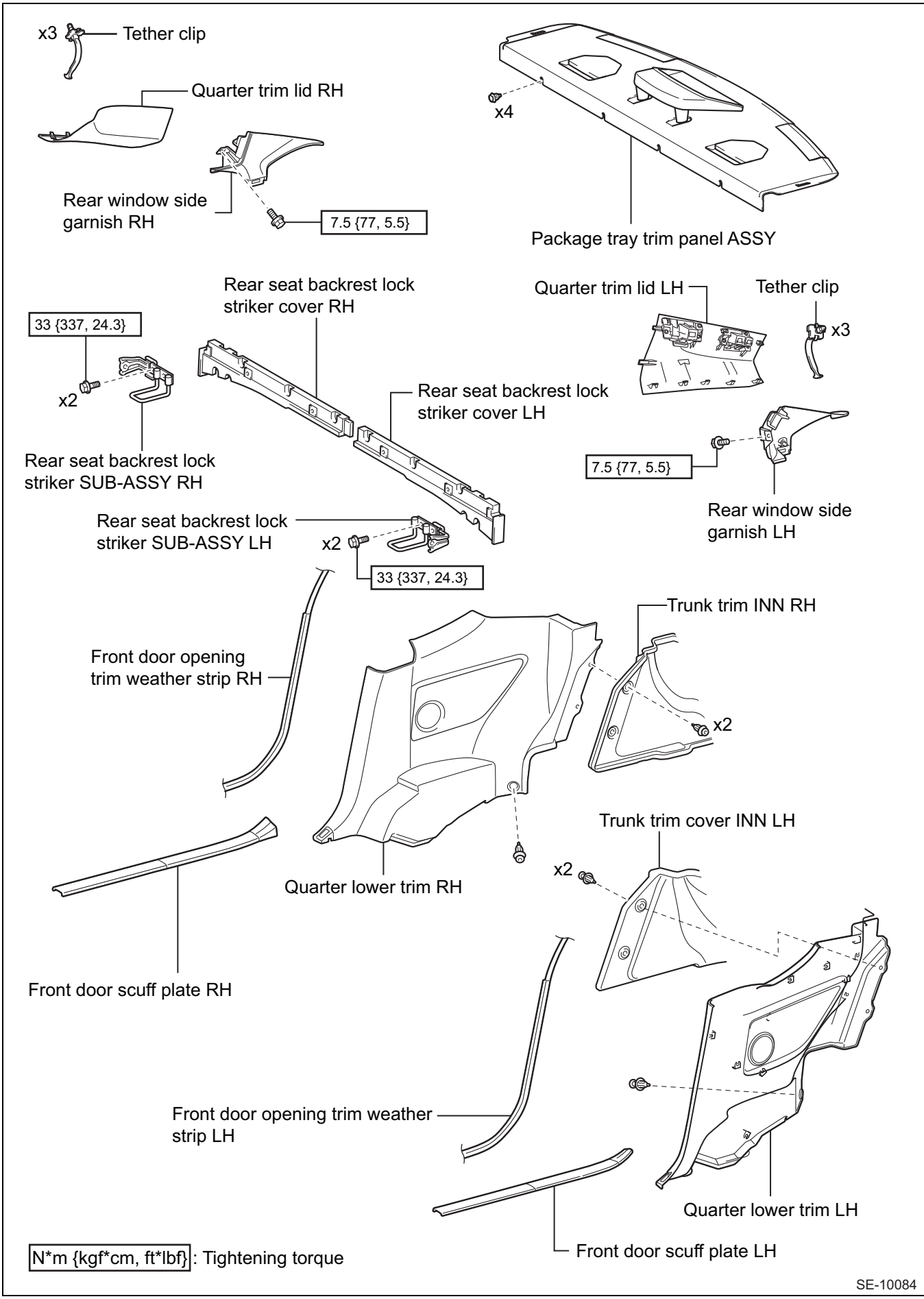

N*m {kgf*cm, ft*lbf}: Tightening torque

SE-10084

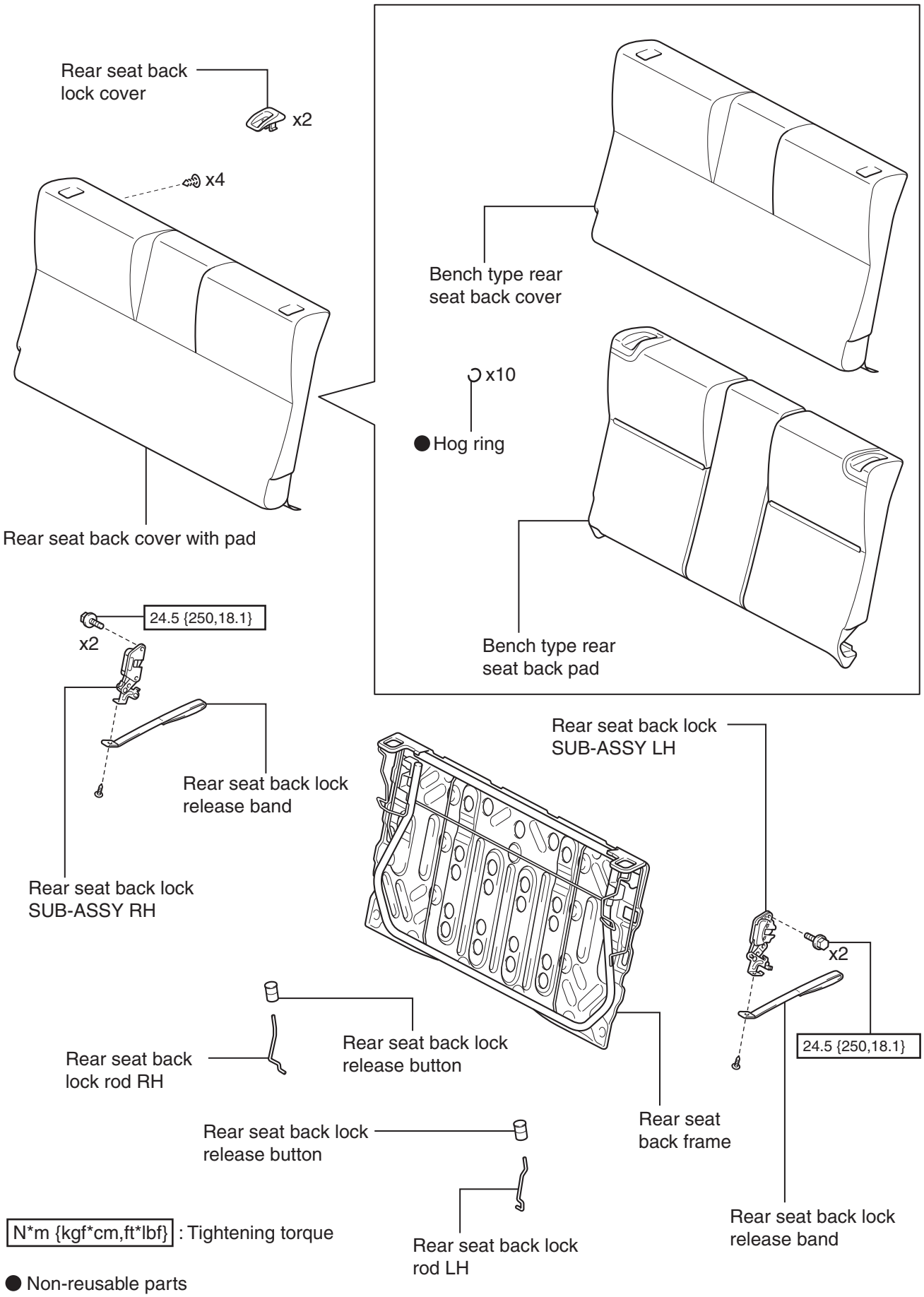
Rear seat back lock cover
x2
x4
Rear seat back cover with pad
Bench type rear seat back cover
x10
Hog ring
Bench type rear seat back pad
24.5 {250,18.1}
x2
Rear seat back lock release band
Rear seat back lock SUB-ASSY RH
Rear seat back lock SUB-ASSY LH
Rear seat back lock rod RH
Rear seat back lock release button
Rear seat back lock release button
Rear seat back frame
x2
24.5 {250,18.1}
Rear seat back lock release band
Rear seat back lock rod LH
N*m {kgf*cm,ft*lbf} : Tightening torque
Non-reusable parts
SE-01615

SE

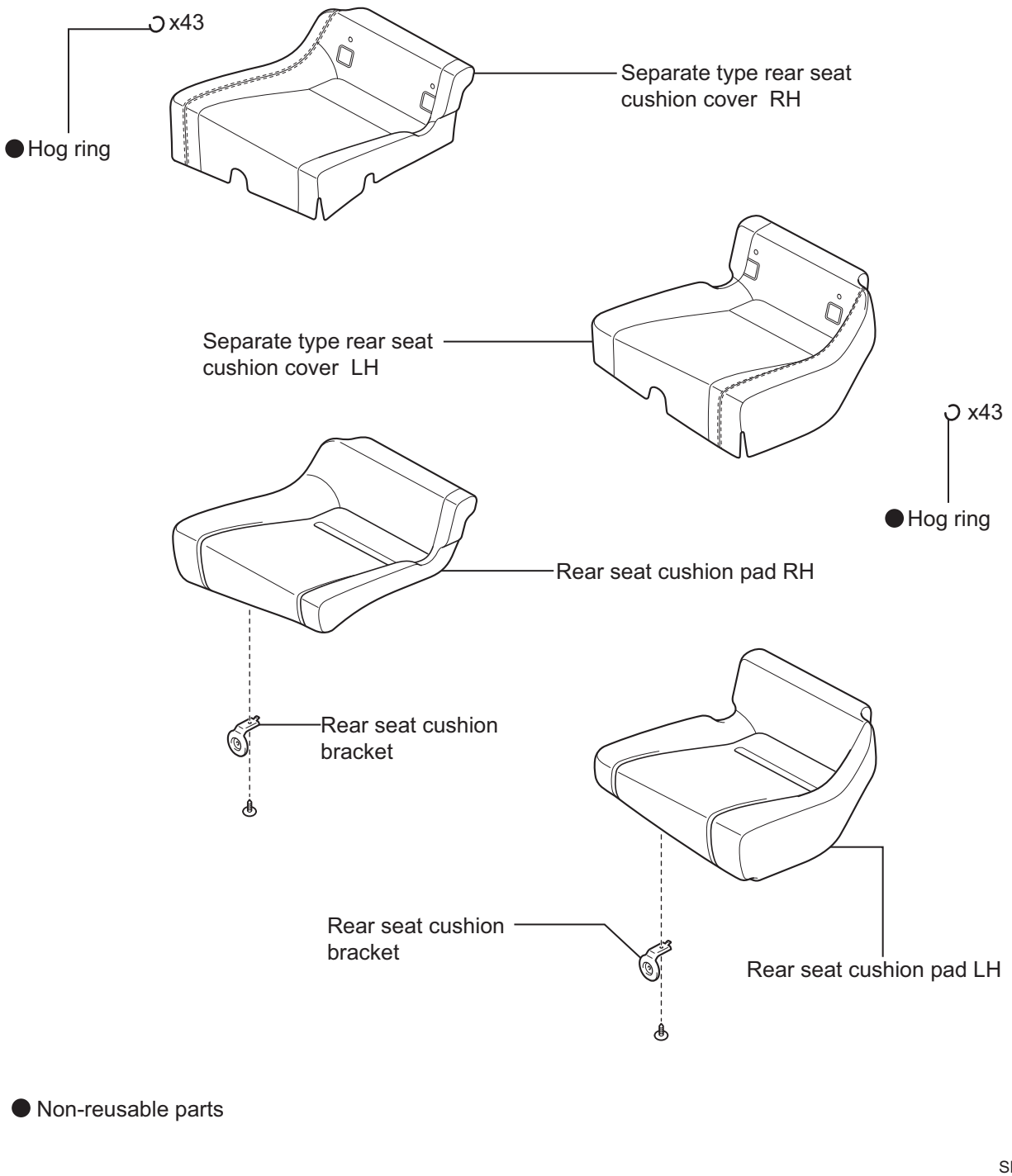

SE

Removal

1. Precautions

   WARNING:

   Before starting the work, read the precautions for the SRS airbag system to make sure to properly perform the work. (Refer to RS - 5)

CAUTION:
After turning the ignition switch to OFF, you may have to wait for a while before disconnecting the battery terminals. Check appropriate precautions for battery terminal disconnection before proceeding. (Refer to IN - 6)

2. Disconnection of the battery ground terminal
WARNING:
- Turn the ignition switch to OFF, disconnect the battery ground terminal, and then wait for 60 seconds before starting the work.
- The air bag and pretensioner system are fitted with a backup power supply. If you start the work within 60 seconds after disconnecting the battery ground terminal, the air bag may be activated.

CAUTION:
To avoid damage to the molding, be sure to fully open the door glasses on both driver's and passenger's sides.

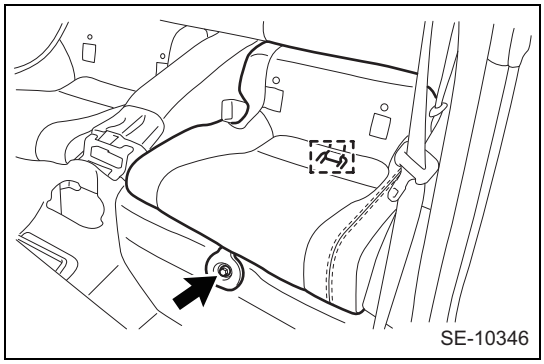
SE-10346

3. Removal of the separate type rear seat cushion ASSY
(1) Remove the bolt.
(2) Release the hook and remove the rear seat cushion ASSY LH.
CAUTION:
- Be careful not to damage the seat, the body exterior and interior.
- If you remove the rear seat cushion ASSY without releasing the hook, the rear seat cushion ASSY may be deformed.

4. Removal of the separate type rear seat cushion ASSY RH
NOTE:
Remove the part in the same manner as LH side.

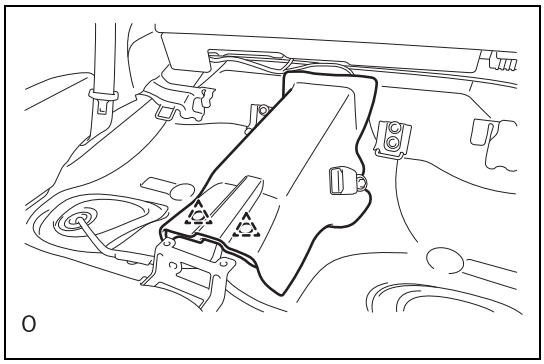
O

5. Removal of the center console silencer No.1
(1) Remove 2 clips and remove the center console silencer No.1.

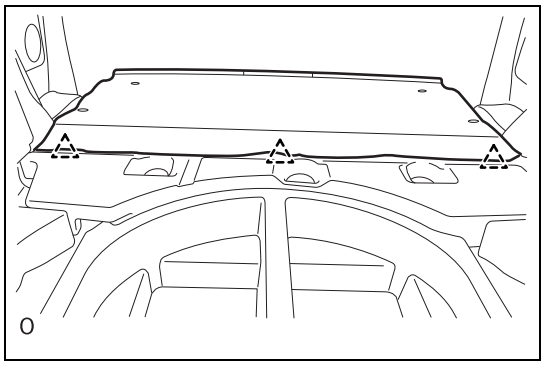
O

6. Removal of the bench type rear seat backrest ASSY
(1) Remove 3 clips and turn over the rear seat backrest cover.

SE

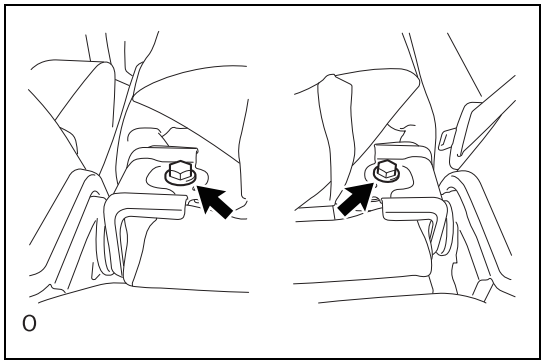

(2) Remove 2 bolts and remove the bench type rear seat backrest ASSY.
CAUTION:
Be careful not to damage the seat, the body exterior and interior.

7. Removal of front door scuff plate LH (Refer to IT - 48)
8. Removal of front door scuff plate RH
NOTE:
Remove the part in the same manner as LH side.
9. Removal of front door opening trim weather strip LH
(1) Remove the front door opening trim weather strip LH to the extent that the quarter lower trim LH can be removed.
10. Removal of the front door opening trim weather strip RH
NOTE:
Remove the part in the same manner as LH side.
11. Disconnection of trunk trim cover INN LH (Refer to IT - 49)
12. Disconnection of trunk trim cover INN RH
NOTE:
Remove the part in the same manner as LH side.
13. Removal of quarter lower trim LH (Refer to IT - 49)
14. Removal of quarter lower trim RH
NOTE:
Remove the part in the same manner as LH side.
15. Removal of the quarter trim lid LH (Refer to IT - 49)
16. Removal of quarter trim lid RH
NOTE:
Remove the part in the same manner as LH side.
17. Removal of the rear window side garnish LH (Refer to IT - 50)
18. Removal of rear window side garnish RH
NOTE:
Remove the part in the same manner as LH side.
19. Removal of package tray trim panel ASSY (Refer to DL - 111)

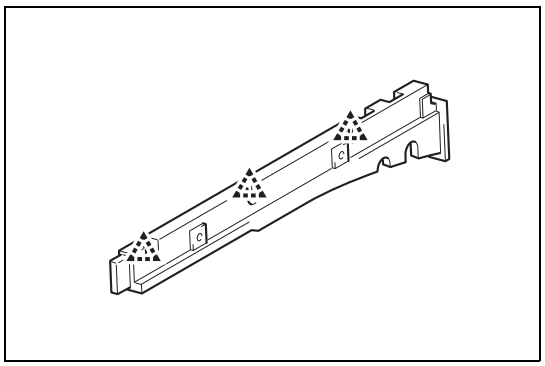

20. Removal of the rear seat backrest lock striker cover LH
(1) Remove 3 clips and remove the rear seat backrest lock striker cover LH.
21. Removal of the rear seat backrest lock striker cover RH
NOTE:
Remove the part in the same manner as LH side.

SE

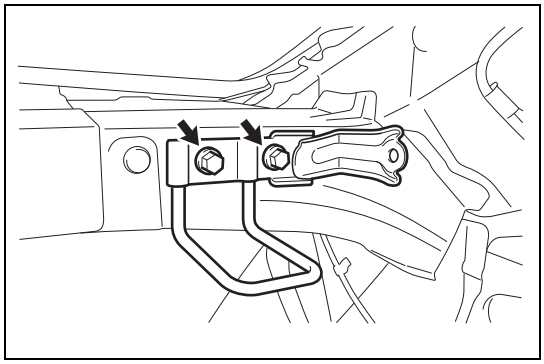

22. Removal of the rear seat backrest lock striker SUB-ASSY LH
    (1) Remove 2 bolts and remove the rear seat backrest lock striker SUB-ASSY LH.

23. Removal of the rear seat backrest lock striker SUB-ASSY RH
    NOTE:
    Remove the part in the same manner as LH side.

Disassembly

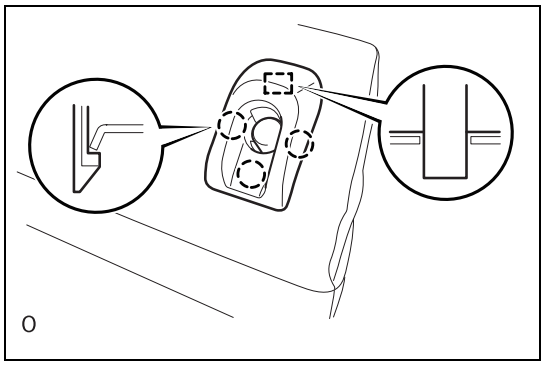

1. Removal of the rear seat backrest lock cover
    (1) Release 3 claws and the guide, and remove the rear seat backrest lock cover.
    NOTE:
    Remove both parts using the same procedures.

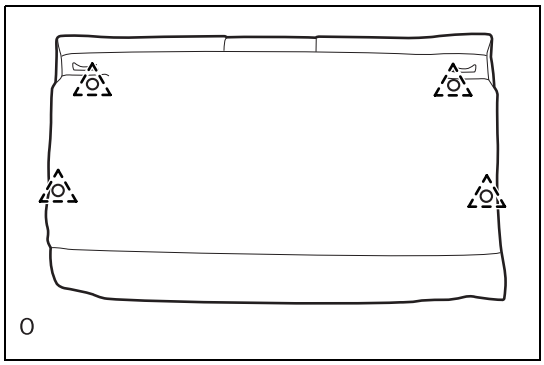

2. Removal of the rear seat backrest cover with pad
    (1) Remove the 4 clips.

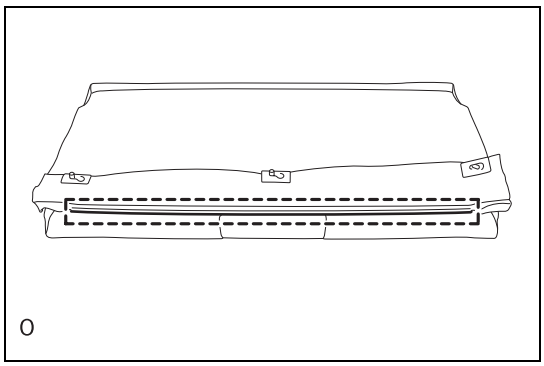

    (2) Release the hook and turn over the bench type rear seat backrest cover.

SE

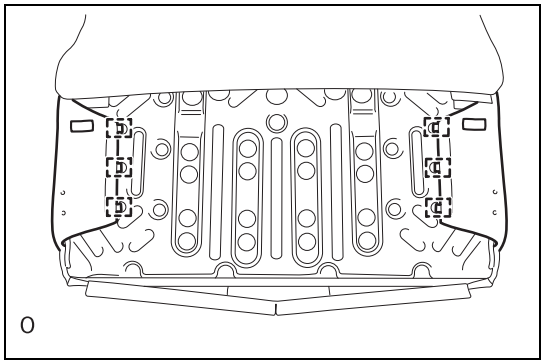

(3) Release 6 hooks and remove the rear seat backrest cover with pad from the rear seat backrest frame.

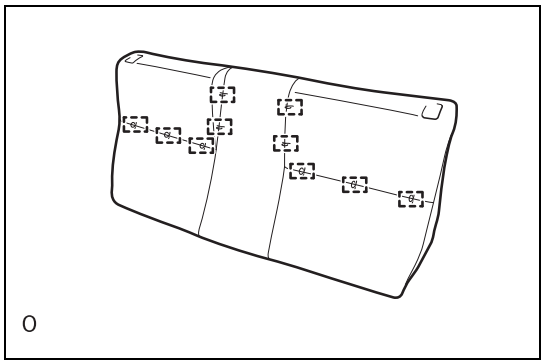

3. Removal of the bench type rear seat backrest cover
   (1) Remove 10 hog rings and remove the bench type rear seat backrest cover from the bench type rear seat backrest pad.

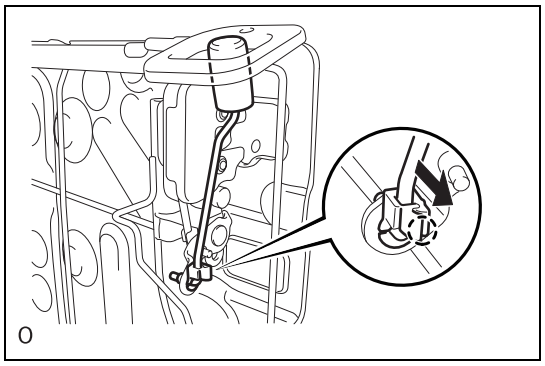

4. Removal of the rear seat backrest lock rod LH
   (1) Release the claw.
   (2) Pull off the rear seat backrest lock rod LH to the direction of the arrow in the figure to remove it from the rear seat backrest lock SUB-ASSY LH.

SE

5. Removal of the rear seat backrest lock rod RH
   NOTE:
   Remove the part in the same manner as LH side.

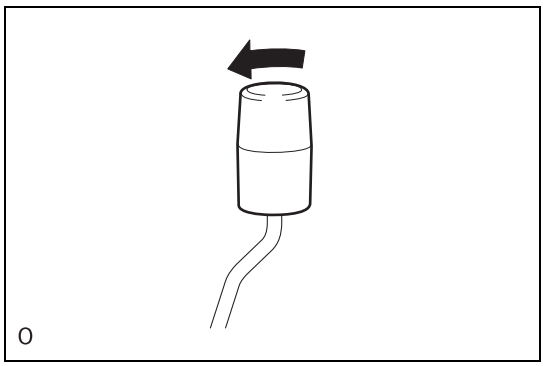

6. Removal of the rear seat backrest lock release button
   (1) Rotate the rear seat backrest lock release button counterclockwise to remove it from the rear seat backrest lock rod LH and RH.

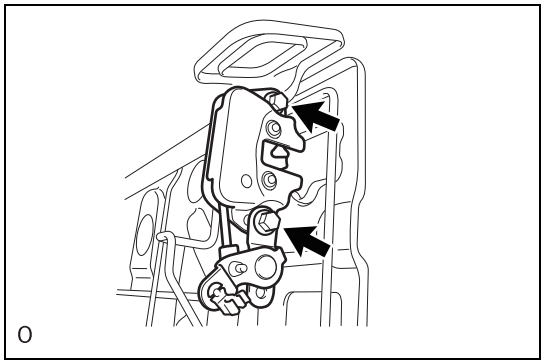

7. Removal of the rear seat backrest lock SUB-ASSY LH
   (1) Remove 2 bolts and remove the rear seat backrest lock SUB-ASSY LH from the rear seat backrest frame.

8. Removal of the rear seat backrest lock SUB-ASSY RH
   NOTE:
   Remove the part in the same manner as LH side.

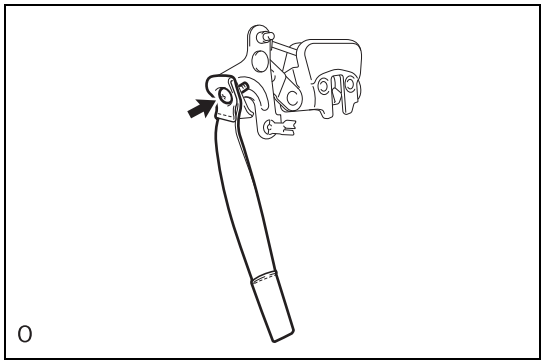

9. Removal of the rear seat backrest lock release band
   (1) Remove the screw, and remove the rear seat backrest lock release band.

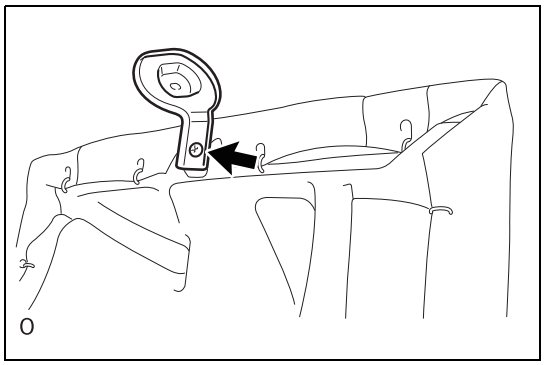

10. Removal of the rear seat cushion bracket
    (1) Remove the screw, and remove the rear seat cushion bracket from the rear seat cushion ASSY LH.
    NOTE:
    Perform the same procedures for the RH side.

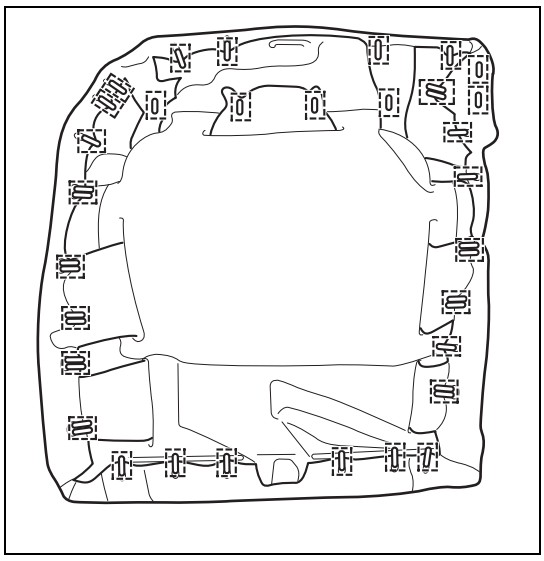

11. Removal of the separate type rear seat cushion cover LH
    (1) Remove 40 hog rings.

SE

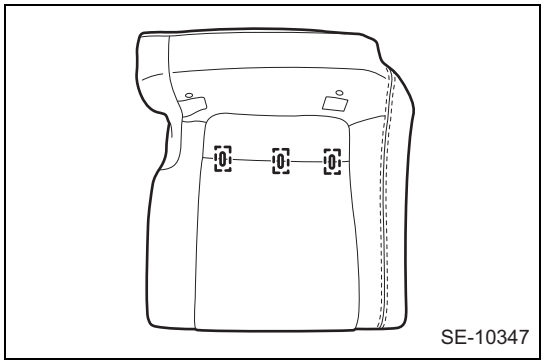

(2) Remove 3 hog rings, and remove the separate type rear seat cushion cover LH from the separate type rear seat cushion pad LH.

12. Removal of the separate type rear seat cushion cover RH
    NOTE:
    Remove the part in the same manner as LH side.

Assembly

1. Installation of the separate type rear seat cushion cover LH
   (1) Temporally install the separate type rear seat cushion cover LH to the separate type rear seat cushion pad LH.

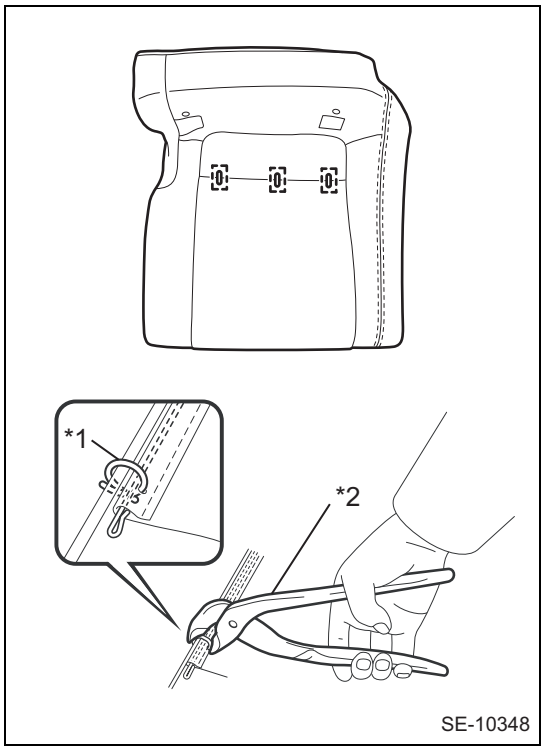

(2) Using hog ring pliers, attach 3 new hog rings.
    CAUTION:
    - Be careful not to contaminate or damage the separate type rear seat cushion cover LH.
    - Align the centers of the fabric and the separate type rear seat cushion pad LH taking care not to make wrinkles, and attach the hog rings.

    NOTE:
    If the separate type rear seat cushion cover LH for replacement is not provided with the retracting wire, reuse the original wire.

Captions in illustration

*1	New hog ring
*2	Hog ring pliers

(3) Using hog ring pliers and 40 new hog rings, install the separate type rear seat cushion cover LH to the rear seat cushion pad LH.
    CAUTION:
    - Be careful not to contaminate or damage the separate type rear seat cushion cover LH.
    - Align the centers of the fabric and the separate type rear seat cushion pad LH taking care not to make wrinkles, and attach the hog rings.

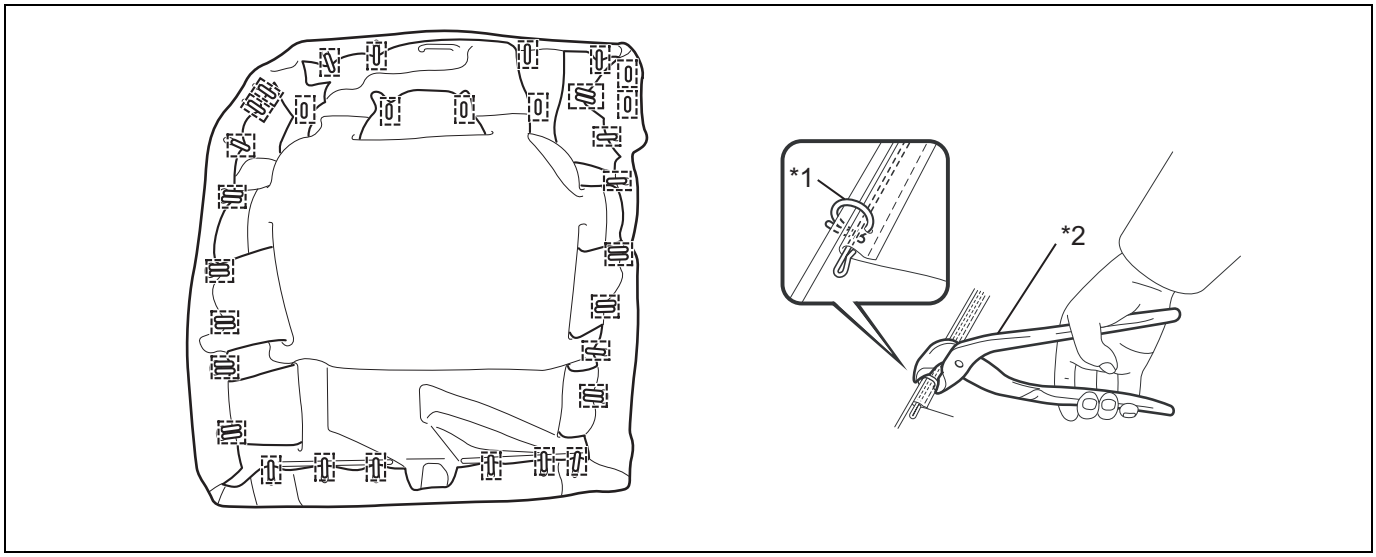

Captions in illustration

*1	New hog ring	*2	Hog ring pliers

2. Installation of the separate type rear seat cushion cover RH
   NOTE:
   Install the part in the same manner as LH side.
3. Installation of the rear seat cushion bracket
   (1) Install the rear seat cushion bracket to the rear seat cushion ASSY LH with the screw.
   NOTE:
   Perform the same procedures for the RH side.

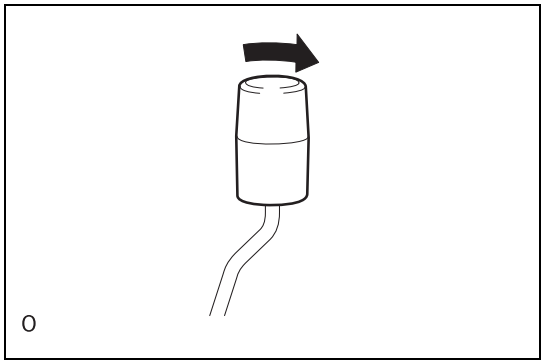

4. Installation of the rear seat backrest lock release button
   (1) Rotate the rear seat backrest lock release buttons to the direction of the arrow in the figure, and install these 2 buttons to the rear seat backrest lock rod RH and LH respectively.

SE

5. Installation of the rear seat backrest lock SUB-ASSY LH
   (1) Install the rear seat backrest lock SUB-ASSY LH to the rear seat backrest frame with 2 bolts.
   Standard value:T=24.5N·m {250kgf·cm} {18.1ft·lbf}
6. Installation of the rear seat backrest lock SUB-ASSY RH
   NOTE:
   Install the part in the same manner as LH side.

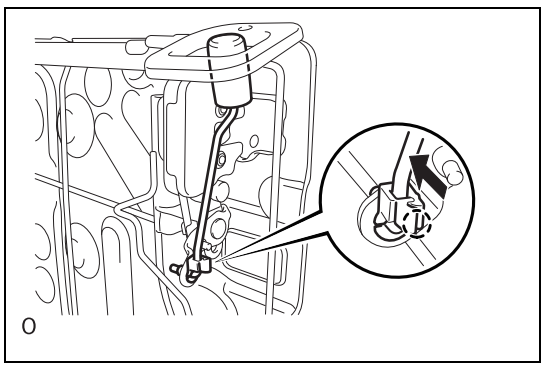

7. Installation of the rear seat backrest lock rod LH
   (1) As shown in the figure, insert the rear seat backrest lock rod LH.
   (2) Engage the claw and install the rear seat backrest lock rod LH.

8. Installation of the rear seat backrest lock rod LH
   NOTE:
   Install the part in the same manner as LH side.
9. Installation of the bench type rear seat backrest cover
   (1) Temporally install the rear seat backrest cover to the bench type rear seat backrest pad.

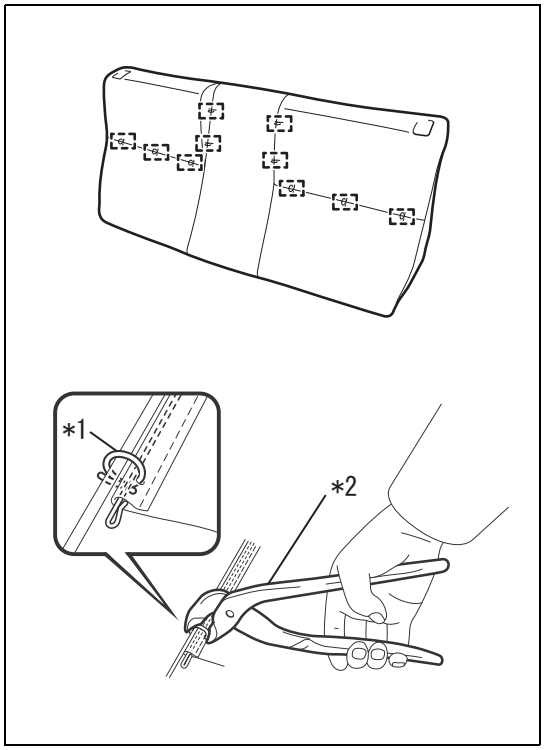

   (2) Using hog ring pliers and 10 new hog rings, install the bench type rear seat backrest cover to the bench type rear seat backrest pad.
   CAUTION:
   - Be careful not to contaminate or damage the bench type rear seat backrest cover.
   - Align the centers of the fabric and the bench type rear seat backrest pad taking care not to make wrinkles, and attach the hog rings.

   NOTE:
   If the bench type rear seat backrest cover for replacement is not provided with the retracting wire, reuse the original wire.

Captions in illustration

*1	New hog ring
*2	Hog ring pliers

SE

10. Installation of the rear seat backrest cover with pad
    (1) Temporally install the rear seat backrest cover with pad to the rear seat backrest frame.
    (2) Engage 6 hooks.
    (3) Engage the hook.
    (4) Install the rear seat backrest cover with pad with 4 clips.
11. Installation of the rear seat backrest lock cover
    (1) Engage the guide and 3 claws, and install the rear seat backrest lock cover.
    NOTE:
    Install both parts using the same procedures.

Installation

1. Installation of the rear seat backrest lock striker SUB-ASSY LH
   (1) Install the rear seat backrest lock striker SUB-ASSY LH with 2 bolts.
2. Installation of the rear seat backrest lock striker SUB-ASSY RH
   NOTE:
   Install the part in the same manner as LH side.
3. Installation of the rear seat backrest lock striker cover LH
   (1) Engage 3 clips and install the rear seat backrest lock striker cover LH.
4. Installation of the rear seat backrest lock striker cover RH
   NOTE:
   Install the part in the same manner as LH side.
5. Installation of package tray trim panel ASSY (Refer to DL - 112)
6. Installation of the rear window side garnish LH (Refer to IT - 57)

7. Installation of rear window side garnish RH
   NOTE:
   Install the part in the same manner as RH side.
8. Installation of the quarter trim lid LH (Refer to IT - 57)
9. Installation of quarter trim lid RH
   NOTE:
   Install the part in the same manner as LH side.
10. Installation of quarter lower trim LH
    (1) Engage the 7 clips and install the quarter lower trim LH.
    (2) Install the 3 clips.
11. Installation of quarter lower trim RH
    NOTE:
    Install the part in the same manner as LH side.
12. Installation of the trunk trim cover INN LH (Refer to IT - 58)
13. Installation of the trunk trim cover INN RH
    NOTE:
    Install the part in the same manner as LH side.
14. Installation of front door scuff plate LH (Refer to IT - 58)
15. Installation of front door scuff plate RH
    NOTE:
    Install the part in the same manner as LH side.
16. Installation of front door opening trim weather strip LH
17. Installation of front door opening trim weather strip RH
18. Installation of the bench type rear seat backrest ASSY
    (1) Carry in the bench type rear seat backrest ASSY to the vehicle.
        CAUTION:
        Be careful not to damage the seat, the body exterior and interior.
    (2) Install the bench type rear seat backrest ASSY with 2 bolts.
        Standard value:T=33N·m {337kgf·cm} {24.3ft·lbf}
    (3) Install the rear seat backrest cover with 3 clips.
19. Installation of the center console silencer No.1
    (1) Install the center console silencer No.1 with 2 clips.
20. Installation of the separate type rear seat cushion ASSY
    (1) Carry in the rear seat ASSY LH to the vehicle.
        CAUTION:
        Be careful not to damage the seat, the body exterior and interior.
    (2) Engage the hook and temporally install the rear seat cushion ASSY LH.
    (3) Install the rear seat cushion ASSY LH with the bolt.
        Standard value:T=13N·m {133kgf·cm} {9.6ft·lbf}
        CAUTION:
        When installing the rear seat cushion ASSY, install it so that the rear seat belt ASSY inner does not face downward.
21. Installation of the separate type rear seat cushion ASSY RH
    NOTE:
    Install the part in the same manner as LH side.

SE

Seat heater switch

Exploded view

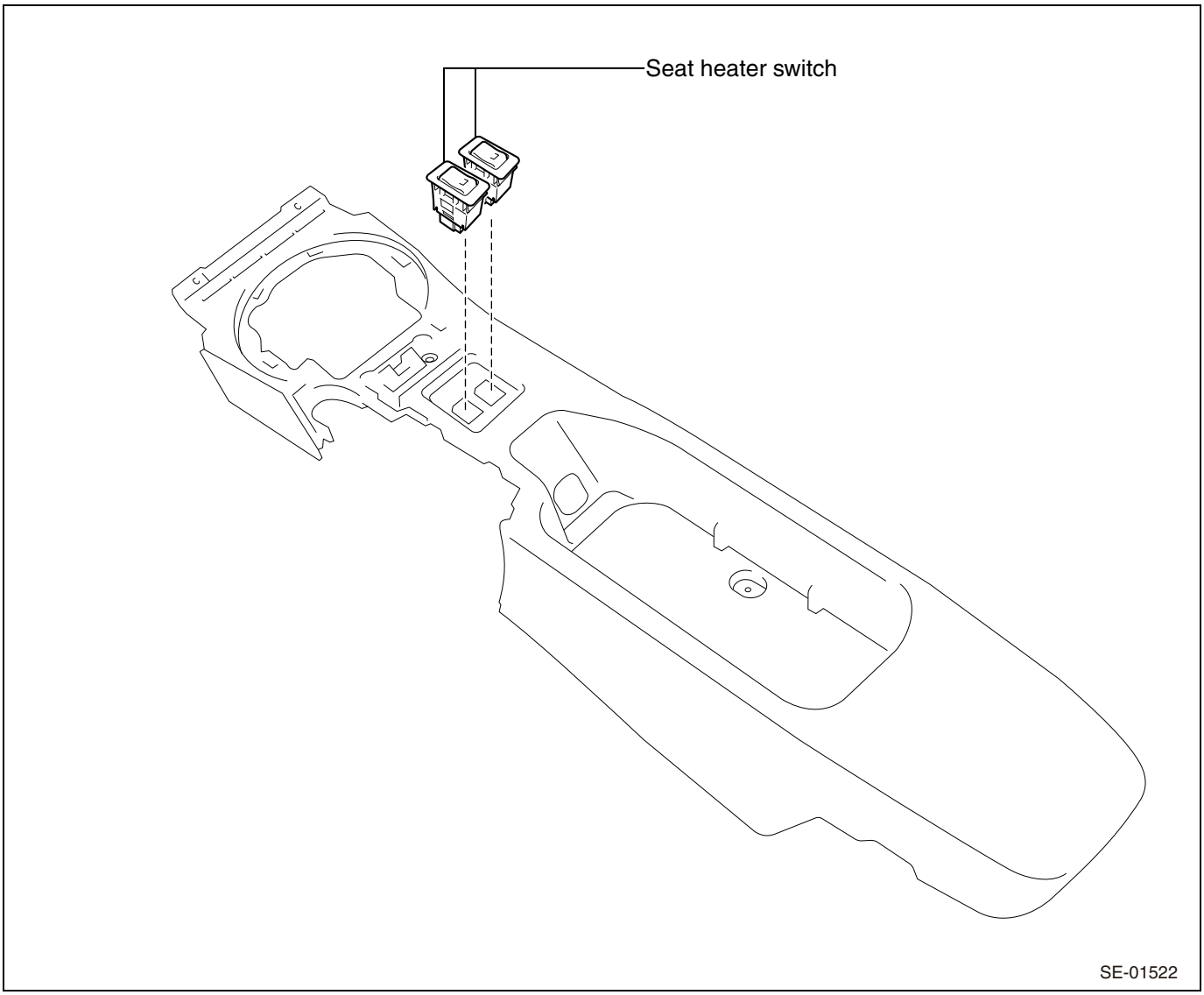

SE

Removal

1. Removal of console box ASSY (Refer to IT - 33)

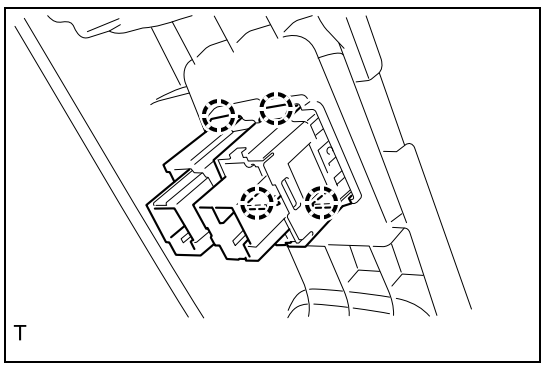

2. Removal of the seat heater switch
   (1) Release 4 claws and remove 2 seat heater switches from the console box ASSY.

Installation

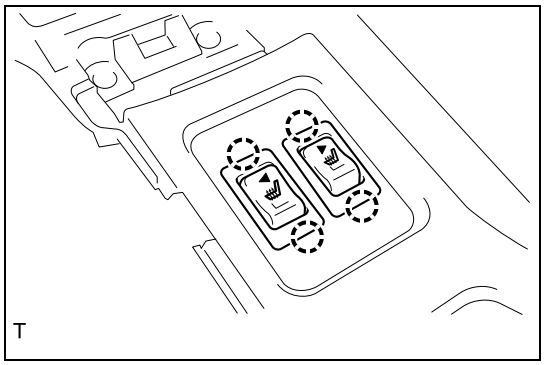

1. Installation of the seat heater switch
   (1) Engage 4 claws and install 2 seat heater switches to the console box ASSY.
   NOTE:
   As shown in the figure, install the switch with the triangle mark pointing the outside of the vehicle.
2. Installation of console box ASSY (Refer to IT - 38)

Unit inspection

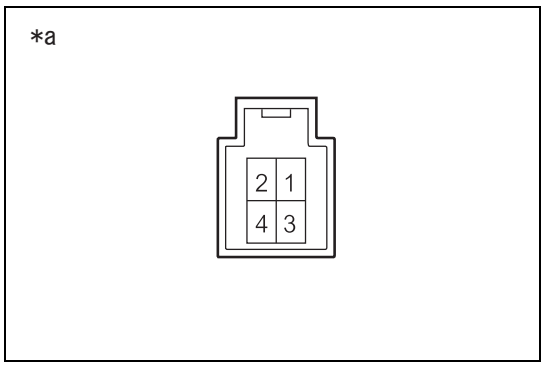

1. Inspection of the seat heater switch (passenger's side)
   (1) Inspection of the seat heater switch
   (a)Measure the resistance according to the following chart.

Captions in illustration

*a	Connector not connected (seat heater switch (passenger's side))

Resistance

Inspection terminals	Inspection conditions	Standard value
1 - 2	HI side ON	Less than 1 Ω
3- 4	HI side ON	Less than 1 Ω
2- 4	LO side ON	Less than 1 Ω

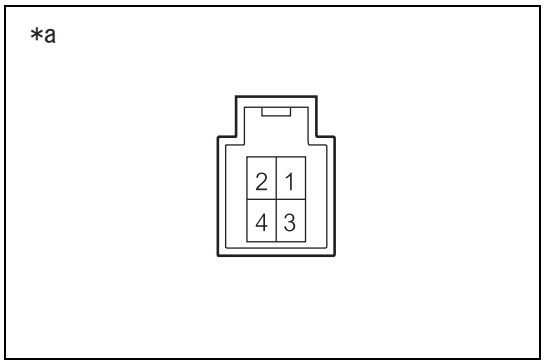

   (2) Indicator inspection
   (a)Check that the indicator illuminates when the battery voltage is applied to each connector terminal.

Captions in illustration

*a	Connector not connected (seat heater switch (passenger's side))

Criteria

Battery connection	Switch conditions	Criteria
Battery positive terminal →2 Battery ground terminal →3	HI side ON	Indicator illuminates.
Battery positive terminal →2 Battery ground terminal →3	LO side ON	

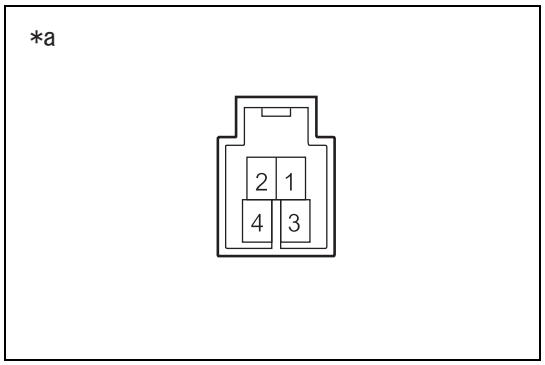

2. Inspection of the seat heater switch (driver's side)
   (1) Inspection of the seat heater switch
   (a)Measure the resistance according to the following chart.

Captions in illustration

*a	Connector not connected (seat heater switch (driver's side))

Resistance

Inspection terminals	Inspection conditions	Standard value
1 - 2	HI side ON	Less than 1 Ω
3- 4	HI side ON	Less than 1 Ω
2- 4	LO side ON	Less than 1 Ω

SE

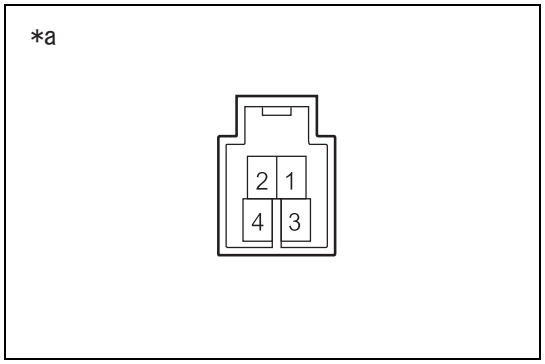

(2) Check illumination.
(a) Check that the LED illuminates when the battery voltage is applied to each connector terminal.

Captions in illustration

*a	Connector not connected (seat heater switch (driver's side))

Criteria

Battery connection	Switch conditions	Criteria
Battery positive terminal →2 Battery ground terminal →3	HI side ON	Indicator illuminates.
Battery positive terminal →2 Battery ground terminal →3	LO side ON	

Seat cushion heater

Unit inspection

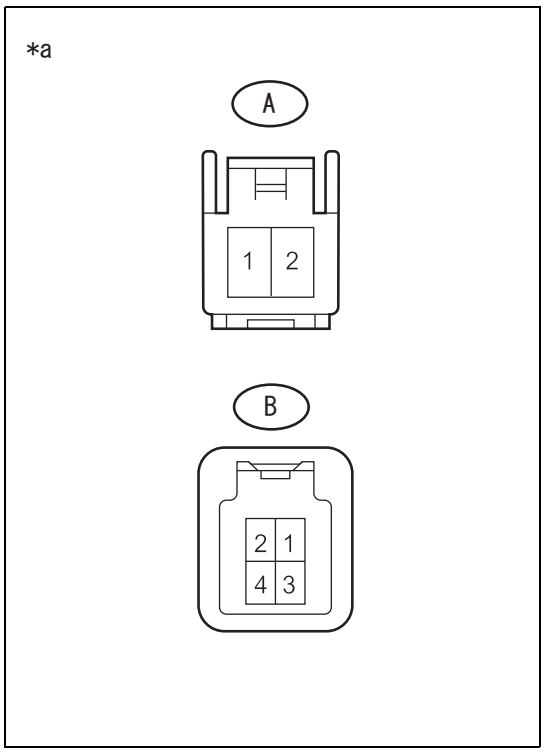

1. Inspection of the separate type front seat cushion pad LH (seat cushion heater)
   (1) Measure the resistance according to the following chart.

Captions in illustration

*a	Connector not connected (separate type front seat cushion pad LH (seat cushion heater))

Resistance

Inspection terminals	Inspection conditions	Standard value
A-1 - B-1	Always	Less than 1 Ω
A-2 - A-3	Always	3.21 to 3.85 Ω
A-2 - B-2	Always	3.21 to 3.85 Ω
A-3 - B-2	Always	Less than 1 Ω

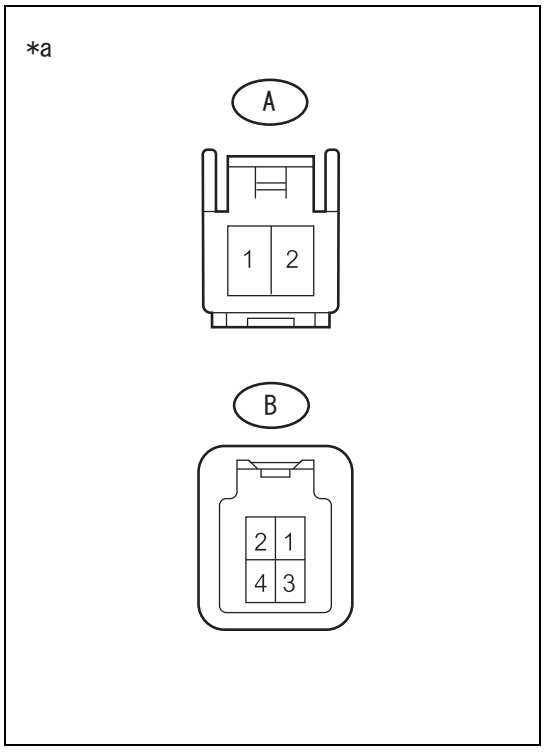

2. Inspection of the separate type front seat cushion pad RH (seat cushion heater)
   (1) Measure the resistance according to the following chart.

Captions in illustration

*a	Connector not connected (separate type front seat cushion pad RH (seat cushion heater))

Resistance

Inspection terminals	Inspection conditions	Standard value
A-1 - B-1	Always	Less than 1 Ω
A-2 - A-3	Always	3.21 to 3.85 Ω
A-2 - B-2	Always	3.21 to 3.85 Ω
A-3 - B-2	Always	Less than 1 Ω

Seat backrest heater

COMPONENTS

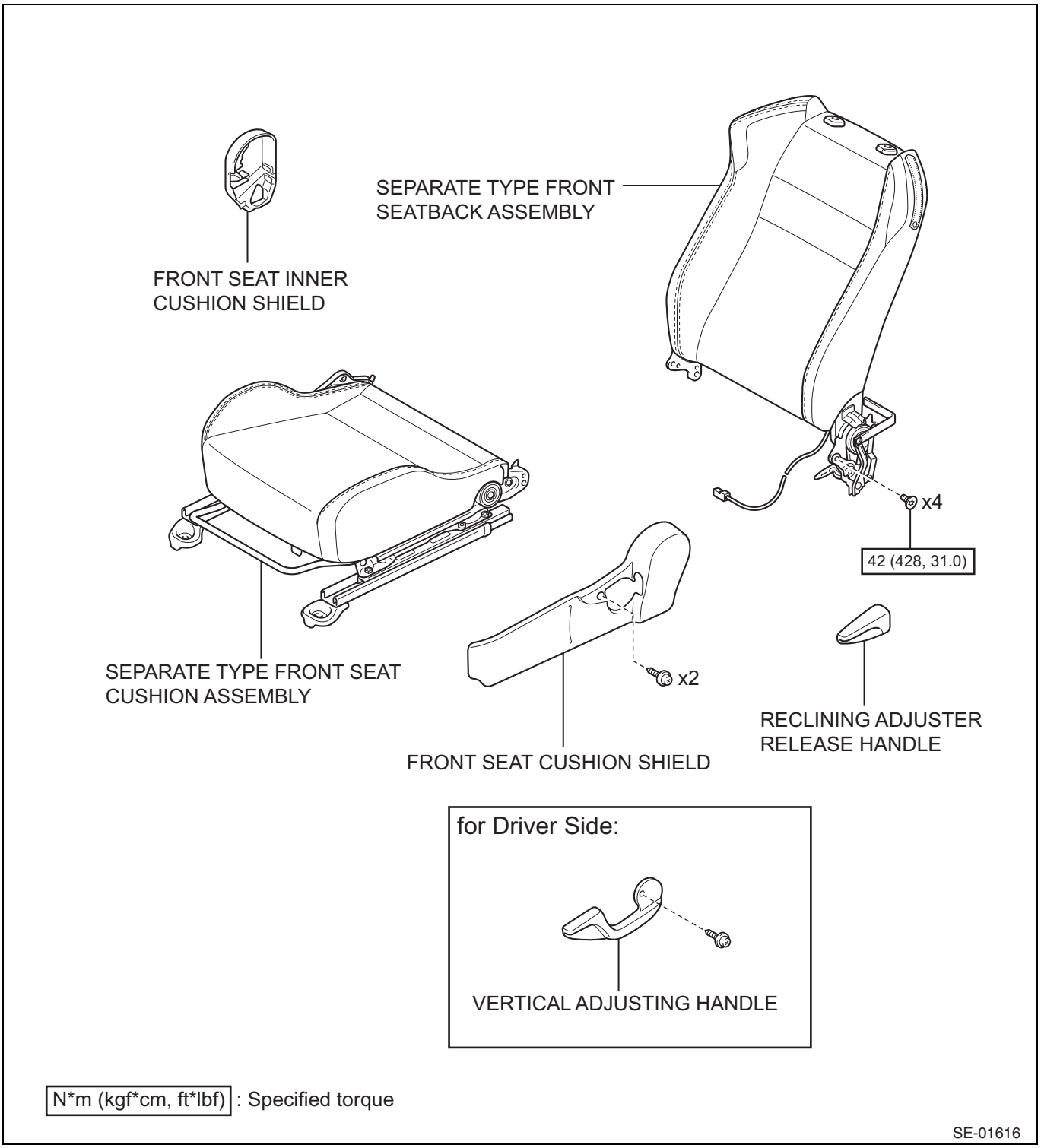

SE

N*m (kgf*cm, ft*lbf) : Specified torque

SE-01616

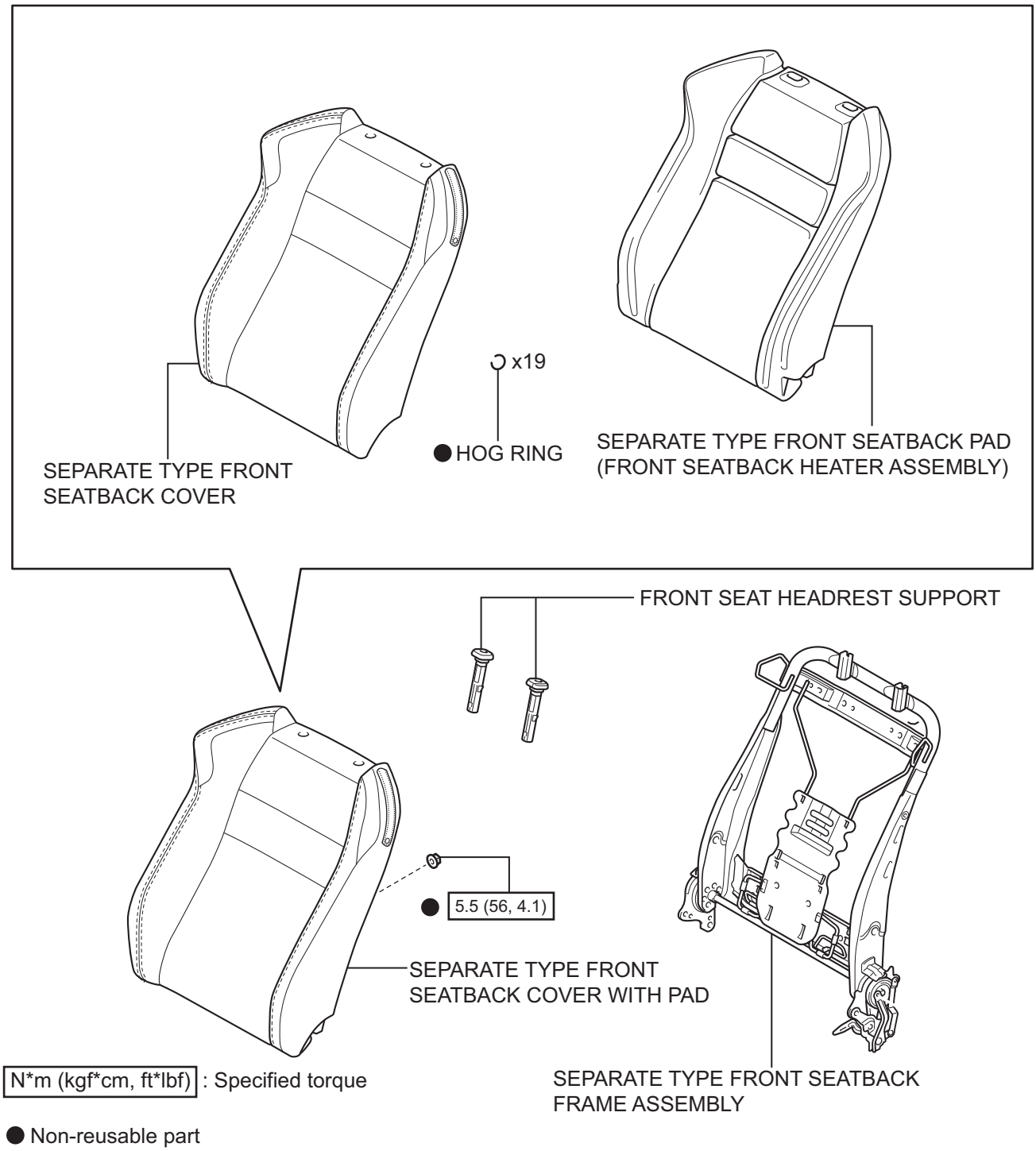

SE

REMOVAL

1. REMOVE FRONT SEAT ASSEMBLY (Refer to SE - 11)
2. REMOVE RECLINING ADJUSTER RELEASE HANDLE (Refer to SE - 12)
3. REMOVE VERTICAL ADJUSTING HANDLE (for Driver Side) (Refer to SE - 13)
4. REMOVE FRONT SEAT CUSHION SHIELD (Refer to SE - 13)
5. REMOVE FRONT SEAT INNER CUSHION SHIELD (Refer to SE - 13)
6. REMOVE SEPARATE TYPE FRONT SEATBACK ASSEMBLY (Refer to SE - 14)
7. REMOVE SEPARATE TYPE FRONT SEATBACK COVER WITH PAD (Refer to SE - 17)

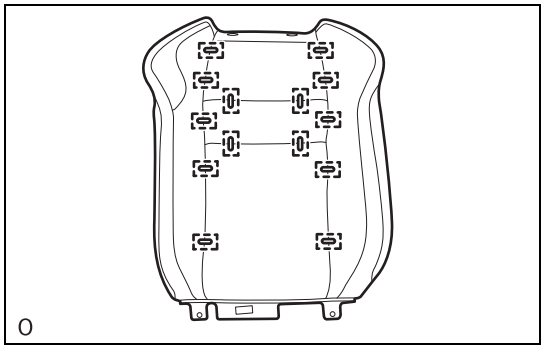

8. REMOVE SEPARATE TYPE FRONT SEATBACK PAD(FRONT SEATBACK HEATER ASSEMBLY)
   (1) Remove the 14 hog rings and separate type front seatback pad from the separate type front seatback cover

INSPECTION

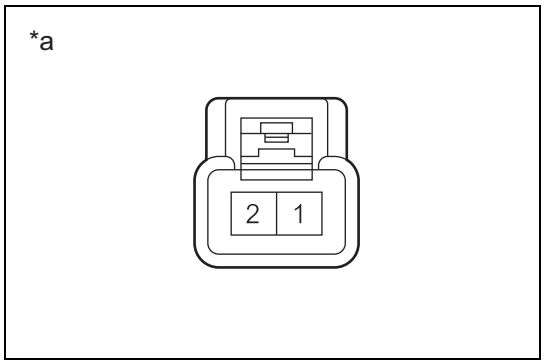

1. INSPECT FRONT SEAT BACK HEATER ASSEMBLY LH
   (1) Measure the resistance according to the value(s) in the table below.

Text in Illustration

*a	Component without harness connected (Separate Type Front Seatback Pad LH)

Standard Resistance

Tester Connection	Condition	Specified Condition
1 - 2	Always	3.26 to 4 Ω

If the result is not as specified, replace the separate type front seatback pad LH.

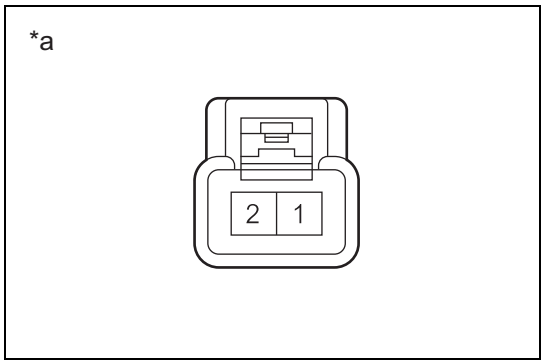

2. INSPECT FRONT SEAT BACK HEATER ASSEMBLY RH
   (1) Measure the resistance according to the value(s) in the table below.

Text in Illustration

*a	Component without harness connected (Separate Type Front Seatback Pad RH)

Standard Resistance

Tester Connection	Condition	Specified Condition
1 - 2	Always	3.26 to 4 Ω

If the result is not as specified, replace the separate type front seatback pad RH.

SE

INSTALLATION

1. INSTALL SEPARATE TYPE FRONT SEATBACK PAD (FRONT SEATBACK HEATER ASSEMBLY) (Refer to SE - 21)
2. INSTALL SEPARATE TYPE FRONT SEATBACK COVER WITH PAD (Refer to SE - 21)
3. INSTALL SEPARATE TYPE FRONT SEATBACK ASSEMBLY (Refer to SE - 25)
4. INSTALL FRONT SEAT INNER CUSHION SHIELD (Refer to SE - 25)
5. INSTALL FRONT SEAT CUSHION SHIELD (Refer to SE - 25)
6. INSTALL VERTICAL ADJUSTING HANDLE (Refer to SE - 25)
7. INSTALL RECLINING ADJUSTER RELEASE HANDLE (Refer to SE - 25)
8. INSTALL FRONT SEAT ASSEMBLY (Refer to SE - 25)
9. Inspection of airbag warning light (Refer to RS - 53)

Seat belt

Seat belt warning system
PARTS LOCATION SB-2
Circuit figure SB-4
Description of functions SB-5
How to proceed with troubleshooting SB-6
Operation check SB-7
Customize parameters SB-8
Problem symptoms table SB-8
ECM TERMINAL ARRANGEMENT SB-9
Data monitor / active test SB-10
Driver side seat belt warning light does not operate SB-11
Passenger's seat belt warning light is faulty SB-13

Passenger's seat belt warning light
Exploded view SB-19
Removal SB-19
Installation SB-19
Unit inspection SB-20

Front seat inner belt ASSY
Exploded view SB-21
Removal SB-21
Installation SB-23
Unit inspection SB-24

Front seat outer belt ASSY
Exploded view SB-25
Removal SB-26
Installation SB-27

Rear seat inner belt ASSY
Exploded view SB-29
Removal SB-29
Installation SB-30

Rear seat outer belt ASSY
Exploded view SB-31
Removal SB-31
Installation SB-32

Child seat restraining device (ISO-FIX)
Exploded view SB-34
Removal SB-36
Installation SB-36

Child seat fixing device (ISO-FIX)
Exploded view SB-38
Removal SB-39
Installation SB-39

Seat belt warning system

PARTS LOCATION

ENGINE ROOM RELAY BLOCK
- MPX-B FUSE
- DOME FUSE
- A/B MAIN FUSE
- IG2 FUSE
- DCC FUSE

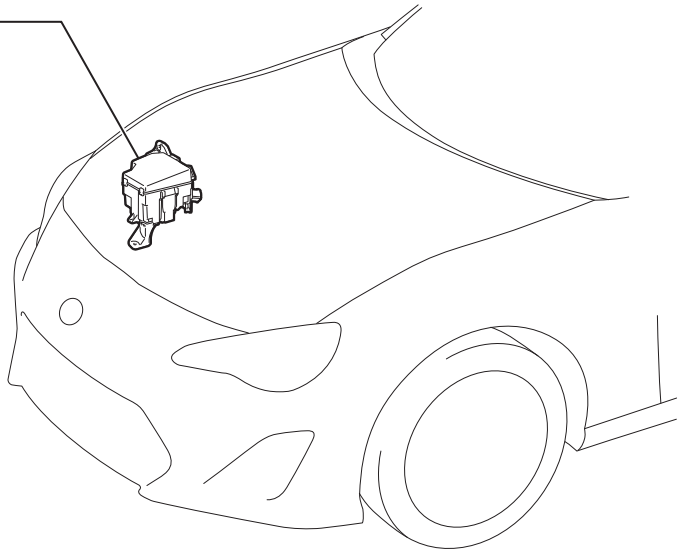

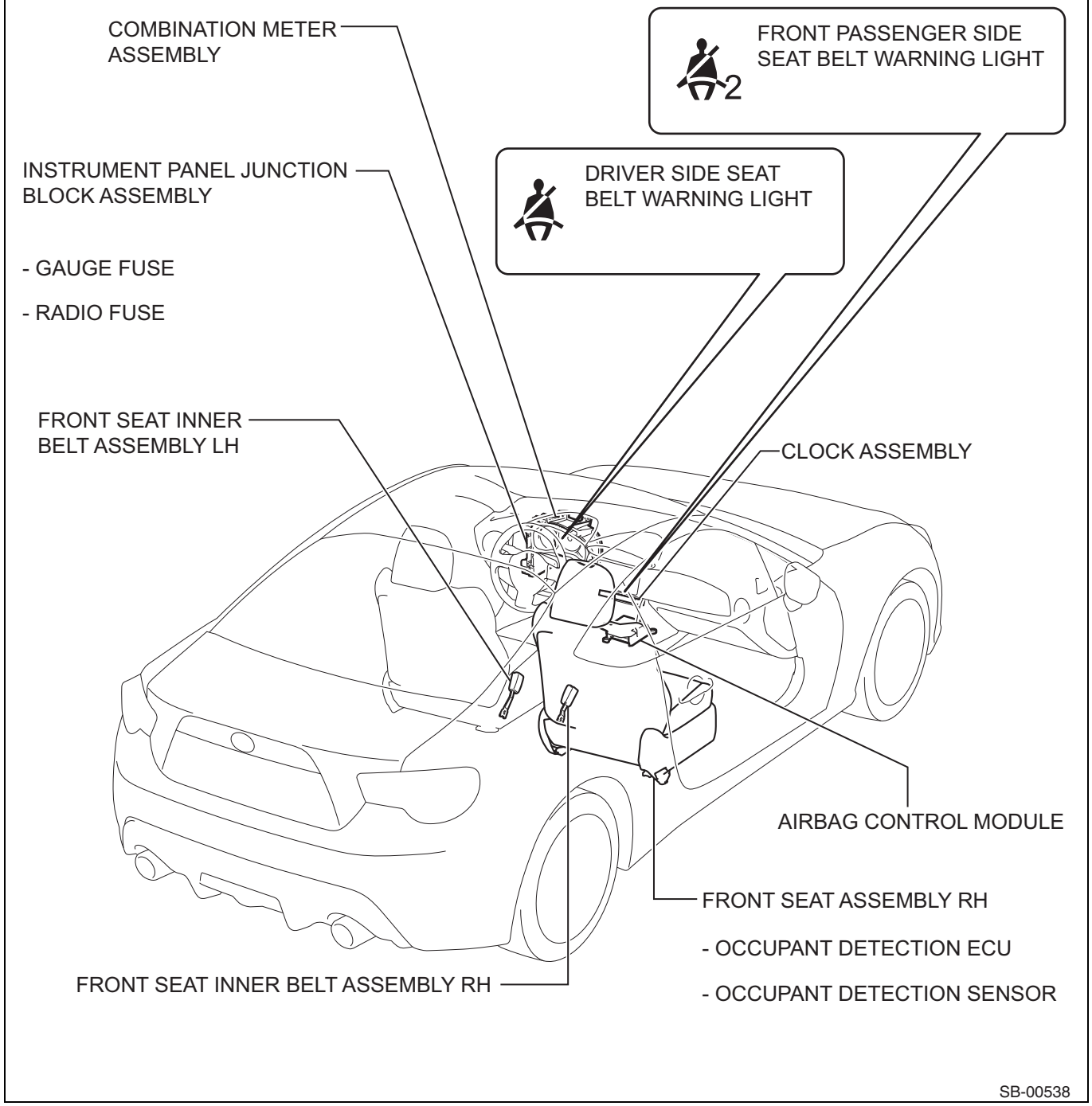
COMBINATION METER ASSEMBLY
FRONT PASSENGER SIDE SEAT BELT WARNING LIGHT
2
INSTRUMENT PANEL JUNCTION BLOCK ASSEMBLY
- GAUGE FUSE
- RADIO FUSE
DRIVER SIDE SEAT BELT WARNING LIGHT
FRONT SEAT INNER BELT ASSEMBLY LH
CLOCK ASSEMBLY
AIRBAG CONTROL MODULE
FRONT SEAT ASSEMBLY RH
- OCCUPANT DETECTION ECU
- OCCUPANT DETECTION SENSOR
FRONT SEAT INNER BELT ASSEMBLY RH
SB-00538

SB

Circuit figure

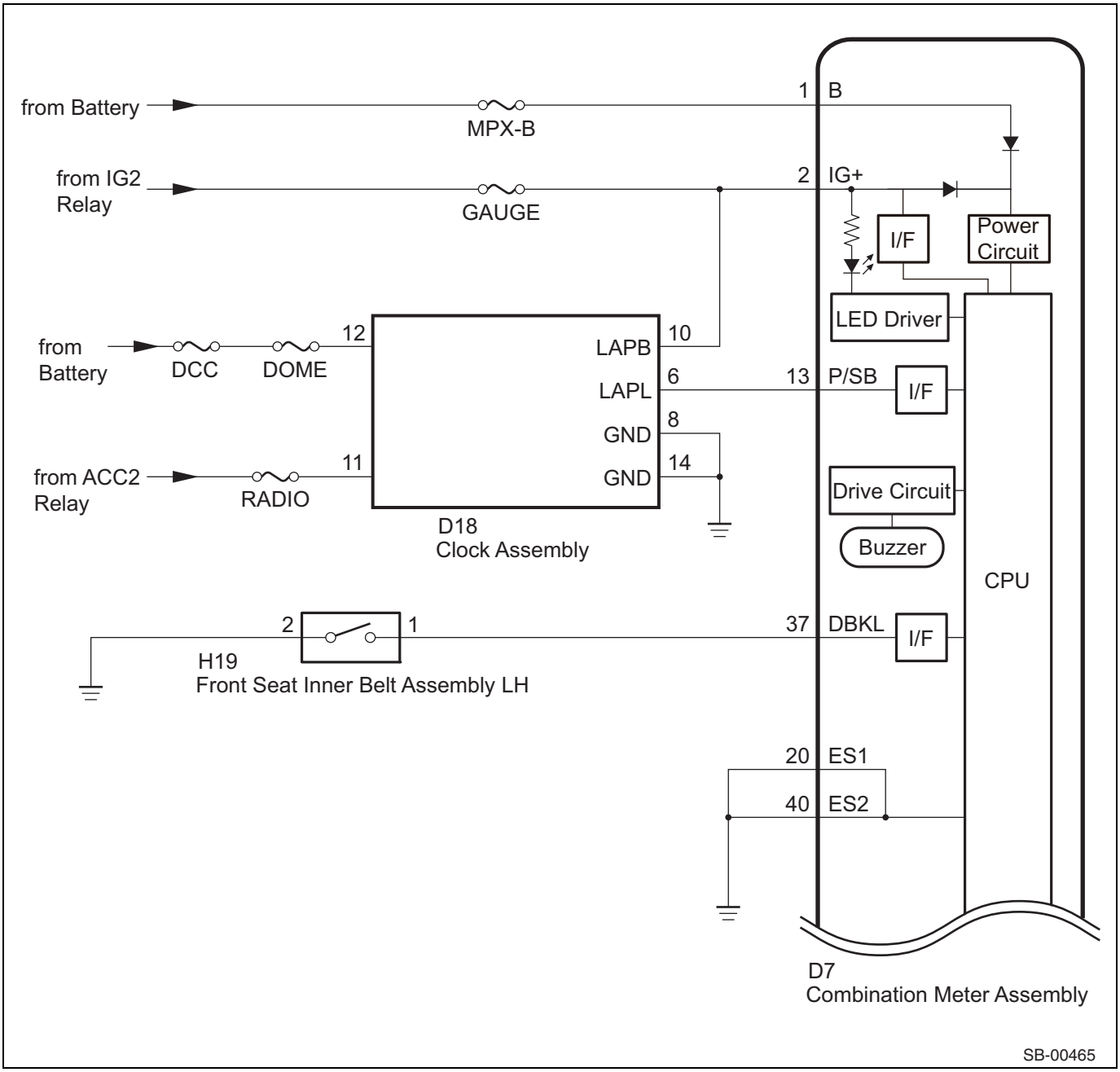

SB

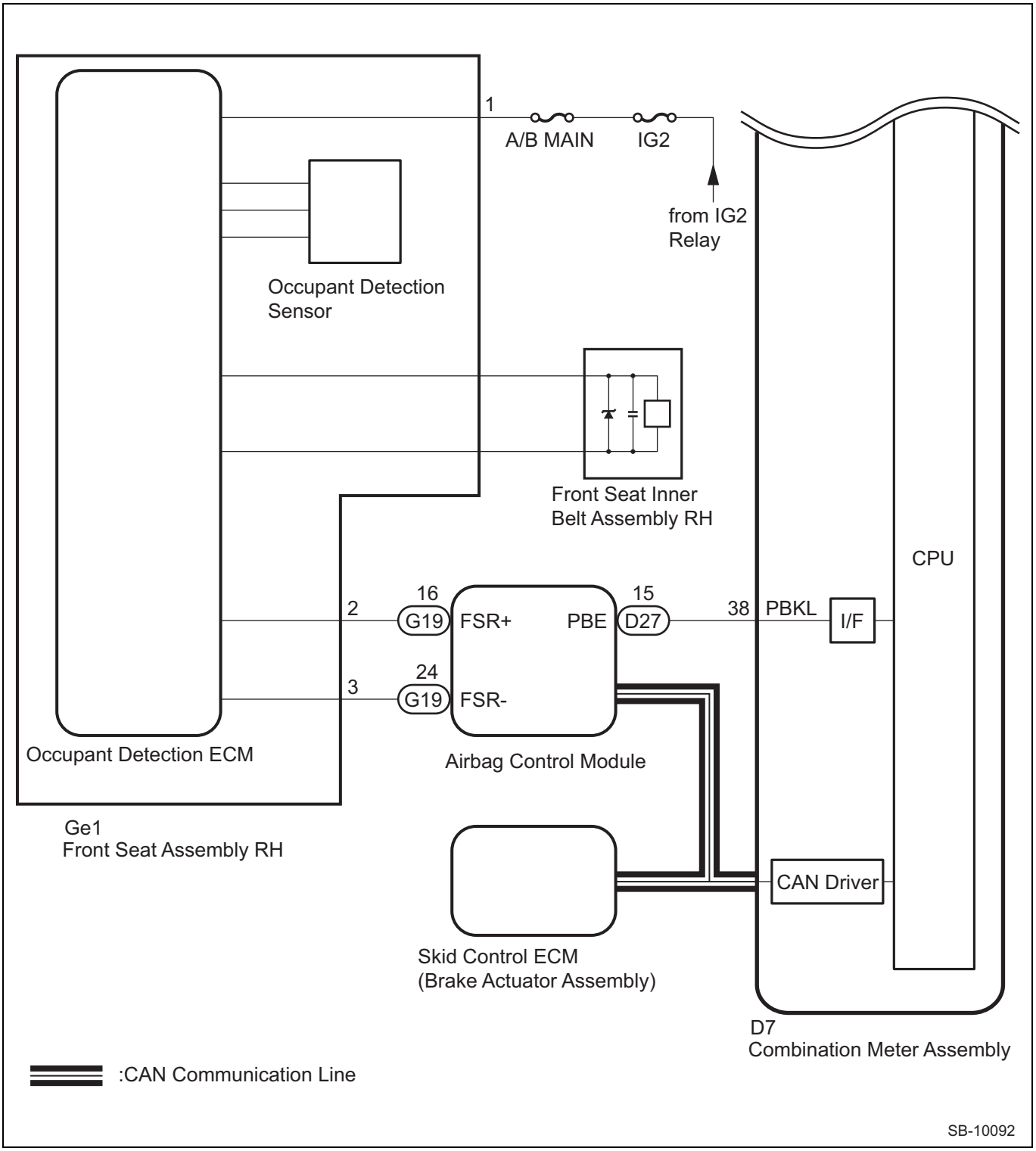

Communication Table

Sender	Receiver	Signal	Communication Method
Airbag control module	Combination meter assembly	Occupant detection	CAN
Skid control ECM	Combination meter assembly	Vehicle speed	

Description of functions

1. Description of the seat belt warning system
   (1) Driver's seat belt warning light:
   If the driver's seat belt is not fastened with IG ON, the front seat belt warning light in the combination meter ASSY will blink to warn the driver. The combination meter ASSY displays the status of the driver's seat belt and the vehicle speed.
   (2) Passenger's seat belt warning light:

If the passenger's seat belt is not fastened with IG ON and the passenger's seat occupied, the front seat belt warning light in the clock ASSY will blink. The combination meter ASSY detects the status of the passenger's seat belt and whether the passenger's seat is occupied or not.

(3) Seat belt warning buzzer:
Check that the seat belt warning buzzer in the combination meter ASSY sounds at 1.2 second intervals for 6 seconds if the driver's seat belt is not fastened within 1.8 seconds after the ignition switch is turned to ON. If the vehicle speed exceeds 20 km/h with the passenger's seat occupied and the driver's or the passenger's seat belt not fastened, the seat belt warning buzzer in the combination meter ASSY will sound once. If 24 seconds have passed after the buzzer starts sounding, the seat belt warning buzzer in the combination meter ASSY sounds at 1.2 second intervals and continues to sound for 9.6 seconds. After that, it sounds intermittently at 0.4 second intervals for approx. 20 seconds.

2. Functions of the main parts

Parts	Function
Front seat inner belt (driver's buckle switch)	Transmits the status information concerning the driver's seat belt (fastened or unfastened) to the combination meter ASSY.
Front seat inner belt (passenger's buckle switch)	Transmits the status information concerning the passenger's seat belt (fastened or unfastened) to the occupant detection ECM.
Occupant detection sensor	Transmits the status information concerning the passenger's seat (occupied or not occupied) to the occupant detection ECM.
Occupant detection ECM	Sends the passenger's seat belt buckle switch signal and the occupant detection signal to the airbag sensor ASSY.
Airbag control module	Sends the passenger's seat belt buckle switch signal to the combination meter ASSY.
Driver's seat belt warning light	If the driver's seat belt is not fastened with IG ON, the combination meter will make the seat belt warning light in the combination meter ASSY blink as a reminder.
Passenger's seat belt warning light	If the passenger's seat belt is not fastened with IG ON and the passenger's seat occupied, the combination meter will make the seat belt warning light in the tell taillight ASSY blink as a reminder.
Seat belt warning buzzer	If the vehicle speed exceeds 20 km/h (12.5 mph) with one of the following conditions met, the buzzer in the combination meter ASSY will sound as a reminder: 1. The driver's seat belt is not fastened. 2. The passenger's seat is occupied and the passenger's seat belt is not fastened.
Skid control ECM	Sends the vehicle speed signal to the combination meter ASSY via CAN communication.

SB

HOW TO PROCEED WITH TROUBLESHOOTING

NOTE:

- Use these procedures to troubleshoot the seat belt warning system.
- *: Use a SSM4.

1	VEHICLE BROUGHT TO WORKSHOP

NEXT

2	INSPECT BATTERY VOLTAGE

Standard voltage: 11 to 14 V

If the voltage is below 11 V, recharge or replace the battery before proceeding to the next step.

NEXT

3	CHECK COMMUNICATION FUNCTION OF CAN COMMUNICATION SYSTEM*

(1) Use the SSM4 to check if the CAN communication system is functioning normally.

Result:

Result	Proceed to
DTC is not output	A
DTC is output	B

B → GO TO CAN COMMUNICATION SYSTEM

A

4	PROBLEM SYMPTOMS TABLE

Result:

Result	Proceed to
Fault is not listed in problem symptoms table	A
Fault is listed in problem symptoms table	B

B → Go to step 6

A

5	OVERALL ANALYSIS AND TROUBLESHOOTING*

(1) Operation Check (see page SB - 10)
(2) Data monitor / active test (see page SB - 10)
(3) ECM terminal arrangement (see page SB - 9)

NEXT

6	REPAIR OR REPLACE

NEXT

7	CONFIRMATION TEST

NEXT

END

Operation check

1. Inspection of the driver's seat belt warning light
   (1) Turn the ignition switch to ON.
   (2) Check that the front seat belt warning light in the combination meter ASSY blinks when the driver's seat belt is not fastened.

2. Inspection of the passenger's seat belt warning light
   (1) Turn the ignition switch to ON.
   (2) Check that the passenger's seat belt warning light in the tell taillight ASSY blinks when the passenger's seat belt is not fastened with the passenger's seat occupied.
   (3) With the passenger's seat occupied, insert the seat belt tongue plate in the buckle, and check that the front seat belt warning light in the tell taillight ASSY goes off.
3. Inspection of the seat belt warning buzzer
   NOTE:
   If the buzzer does not sound, the buzzer cancel setting may be turned on. (Refer to SB - 8)
   (1) Lift up the vehicle by using the swing arm lift. (Refer to IN - 6)
   (2) Turn the ignition switch to ON.
   (3) Occupy the driver's seat and the passenger's seat, and unfasten the seat belts of the both seats.
   CAUTION:
   Be careful not to touch the seat backrest while sitting on the seat.
   (4) With the driver's or passenger's seat belt tongue plate not inserted in the buckle, drive the vehicle at approx. 20 km/h or above. In this condition, check that the buzzer in the combination meter ASSY sounds at 1.2 second intervals for 9.6 seconds, and then sounds at 0.4 second intervals for 20 seconds.
   (5) Check that the buzzer stops sounding 30 seconds after it first started to sound.
   (6) After the buzzer stops sounding, turn the ignition switch to OFF, and then restart the engine. Drive the vehicle at approx. 20 km/h or above with the driver's or passenger's seat belt tongue plate not inserted in the buckle, and check that the buzzer sounds again.
   (7) After the buzzer stops sounding, insert the driver's and passenger's seat belt tongue plates in the buckles. Drive the vehicle at approx. 20 km/h or above, unfasten the driver's or passenger's seat belt, and check that the buzzer sounds again.
   (8) After the buzzer stops sounding, change the shift position to R, and then to D. With the seat belt tongue plate not inserted in the buckle, drive the vehicle at approx. 20 km/h or above, and check that the buzzer sounds again.

CUSTOMIZE PARAMETERS

1. CUSTOMIZE SEAT BELT WARNING SYSTEM
   NOTE:
   The following items can be customized.
   CAUTION:
   - When the customer requests a change in a function, first make sure that the function can be customized.
   - Be sure to make a note of the current settings before customizing.
   - When troubleshooting a function, first make sure that the function is set to the default setting.
   - These buzzers should be ON for safe driving. Perform this procedure only if it is necessary to set the buzzer to OFF (disabled).

   (1) Customizing with the SSM4
      (a) Connect the SSM4 to the DLC3.
      (b) Turn the ignition switch to ON.
      (c) Turn the SSM4 on.
      (d) Enter the following menus: [Each System] / [Combination Meter] / [Customize]
      (e) Select the setting by referring to the table below.

Warning

Display	Default	Content	Setting	Relevant ECU
Driver Side Seatbelt Warning Buzzer	ON	Function to sound the driver seat belt warning buzzer	ON/OFF	Combination meter assembly
Front Passenger Side Seatbelt Warning Buzzer	ON	Function to sound the front passenger seat belt warning buzzer	ON/OFF	

NOTE:
This setting is only valid when the vehicle is driven at 20 km/h (12 mph) or more.

PROBLEM SYMPTOMS TABLE

NOTE:

- Use the table below to help determine the cause of problem symptoms. If multiple suspected areas are listed, the potential causes of the symptoms are listed in order of probability in the "Suspected Area" column of the table. Check each symptom by checking the suspected areas in the order they are listed. Replace parts as necessary.

• Inspect the fuses and relays related to this system before inspecting the suspected areas below.

Seat Belt Warning System

Symptom	Suspected Area	See page
Driver side seat belt warning light does not operate	Proceed to "Driver Side Seat Belt Warning Light does not Operate"	SB - 11
Front passenger side seat belt warning light malfunction	Airbag system	-
	Occupant classification system	-
	Proceed to "Front Passenger Side Seat Belt Warning Light Malfunction"	SB - 13
	Front seat inner belt assembly RH	-
	Combination meter assembly	-
Seat belt warning buzzer does not operate	Meter/Gauge system	-

ECM terminal arrangement

1. CHECK COMBINATION METER ASSEMBLY

(1) Disconnect the D7 combination meter assembly connector.

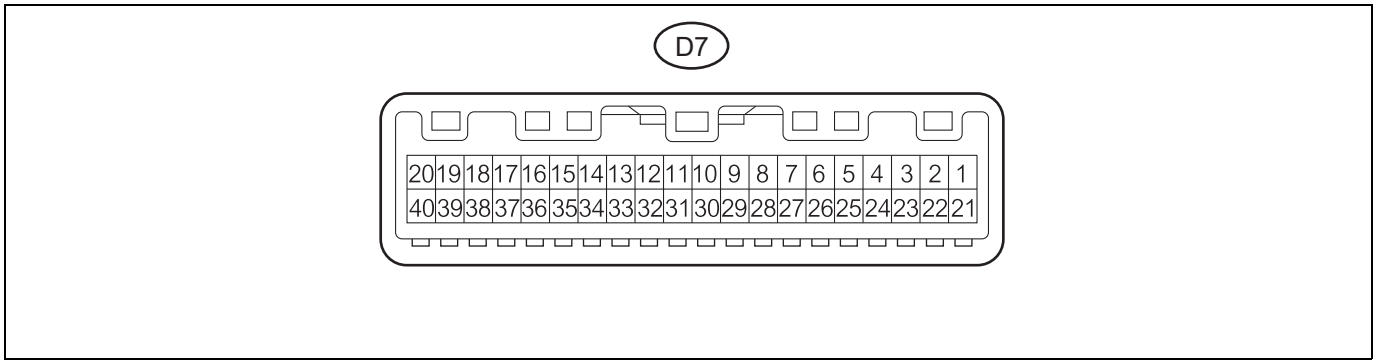

(2) Measure the resistance and voltage according to the value(s) in the table below.

NOTE:

Measure the values on the wire harness side with the connector disconnected.

Tester Connection	Wiring Color	Terminal Description	Condition	Specified Condition
D7-1 (+B)- Body ground	R-W - Body ground	Combination meter +B line	Always	11 to 14 V
D7-2 (IG+) - Body ground	W-G - Body ground	Combination meter IG line	Ignition switch ON	11 to 14 V
			Ignition switch off	Below 1 V
D7-20 (ES1) - Body ground	B-Y - Body ground	Ground	Always	Below 1 Ω
D7-37 (DBKL) - Body ground	R-B - Body ground	Driver seat belt signal	Driver seat belt fastened	10 kΩ or higher
			Driver seat belt unfastened	Below 1 Ω
D7-40 (ES2) - Body ground	B-Y - Body ground	Ground	Always	Below 1 Ω

If the result is not as specified, there may be a malfunction in the wire harness.

(3) Reconnect the D7 combination meter assembly connector.

(4) Measure the voltage according to the value(s) in the table below.

Tester Connection	Wiring Color	Terminal Description	Condition	Specified Condition
D7-13 (P/SB) - Body ground	BR-R - Body ground	Front passenger seat belt warning signal	Front passenger seat occupied, seat belt fastened	Below 1 V
			Front passenger seat occupied, seat belt unfastened	11 to 14 V

If the result is not as specified, the combination meter assembly may have a malfunction.

SB

2. Check the airbag control module

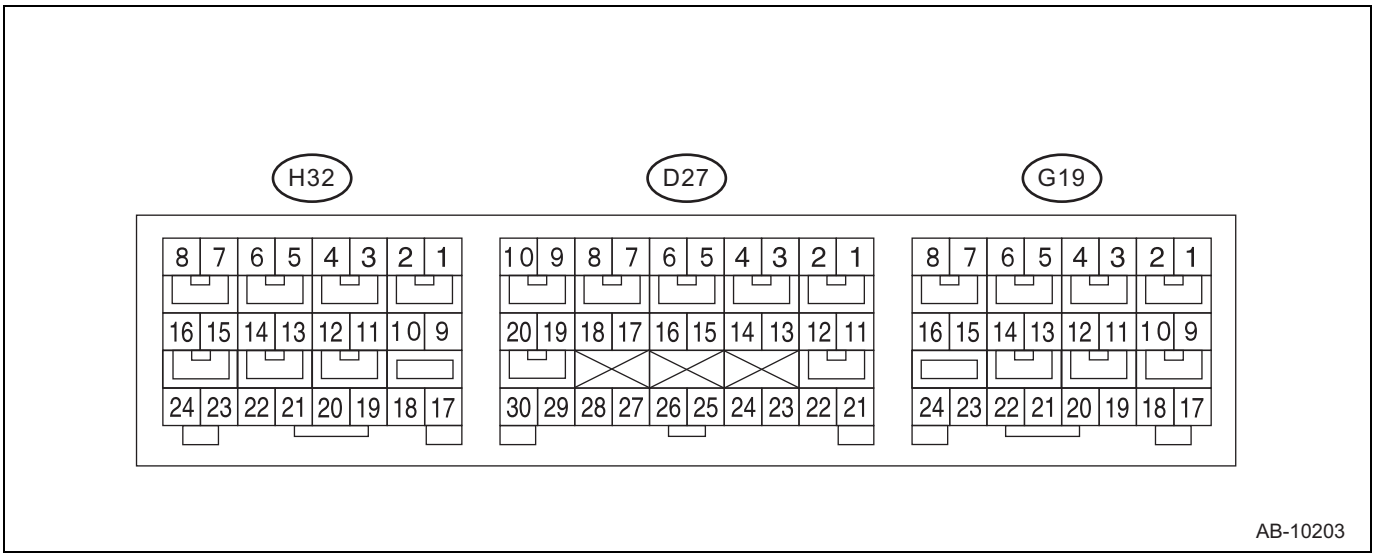

Terminal No.	Terminal Symbol	Destination
G19-16	FSR+	Occupant detection ECU
G19-24	FSR-	Occupant detection ECU

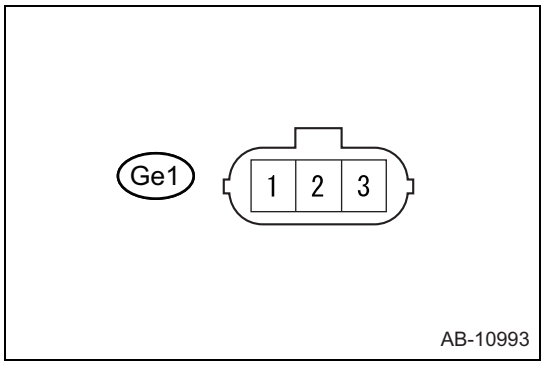

3. CHECK OCCUPANT DETECTION ECU
   (1) Measure the voltage according to the value(s) in the table below.

Tester Connection	Wiring Color	Terminal Description	Condition	Specification
Ge1-1 - Body ground	G - Body ground	Occupant detection ECU IG line	Ignition switch ON	11 to 14 V
Ge1-2 - Ge1-3	Y-G - Y	Air bag control module communication line	Ignition switch ON	Pulse generation

If the result is not as specified, the occupant detection ECU may have a malfunction.

Data monitor / active test

1. DATA LIST
   NOTE:
   Using the SSM4 to read the Data List allows the values or states of switches, sensors, actuators and other items to be read without removing any parts. This non-intrusive inspection can be very useful because intermittent conditions or signals may be discovered before parts or wiring is disturbed. Reading the Data List information early in troubleshooting is one way to save diagnostic time.
   CAUTION:
   In the following table, the values listed under "Normal Condition" are reference values. Do not depend solely on these reference values when deciding whether a part is faulty or not.
   (1) Connect the SSM4 to the DLC3.
   (2) Turn the ignition switch to ON.
   (3) Turn the SSM4 on.
   (4) Enter the following menus: [Each System Check] / [Combination Meter] / [Data monitor], [Each System Check] / [Airbag] / [Data monitor], [Each System Check] / [Occupant Detection] / [Data monitor]

(5) Read the Data List according to the display on the SSM4.

Combination Meter (Combination Meter Assembly)

Tester Display	Measurement Item/Range	Normal Condition	Diagnostic Note
[Driver Side Seatbelt Warning Buzzer]	Driver seat belt warning buzzer/ON or OFF	Customized value displayed	-
[P-Seatbelt Warning Buzzer]	Front passenger seat belt warning buzzer/ON or OFF	Customized value displayed	-

Occupant Detection (Occupant Detection ECU)

Tester Display	Measurement Item/Range	Normal Condition	Diagnostic Note
[Status of Passenger Side Buckle SW]	Front passenger buckle switch/ON or OFF	Unset: Seat belt not fastened Set: Seat belt fastened NG: Data is not determined	-

Airbag control module

Tester Display	Measurement Item/Range	Normal Condition	Diagnostic Note
[Status of Passenger Side Buckle SW]	Front passenger buckle switch/ON or OFF	Unset: Seat belt not fastened Set: Seat belt fastened NG: Data is not determined	-

2. ACTIVE TEST

Using the SSM4 to perform Active Tests allows relays, VSVs, actuators and other items to be operated without removing any parts. This non-intrusive functional inspection can be very useful because intermittent operation may be discovered before parts or wiring is disturbed. Performing Active Tests early in troubleshooting is one way to save diagnostic time. Data List information can be displayed while performing Active Tests.

(1) Connect the SSM4 to the DLC3.
(2) Turn the ignition switch to ON.
(3) Turn the SSM4 on.
(4) Enter the following menus: [Each System Check] / [Combination Meter] / [Active Test]
(5) Perform the Active Test according to the display on the SSM4.

Combination Meter (Combination Meter Assembly)

Tester Display	Test Part	Control Range	Diagnostic Note
[Driver Side Seat Belt]	Seat belt warning light	OFF/ON	-
[Front passenger Side Seat Belt]	Seat belt warning light	OFF/ON	-

SB

Driver Side Seat Belt Warning Light does not Operate

DESCRIPTION

The combination meter assembly illuminates, blinks or turns off the seat belt warning light on the combination meter assembly in accordance with the state of the front seat inner belt assembly LH.

NOTE:

The seat belt warning light on the combination meter assembly is used for both the driver seat and front passenger seat.

WIRING DIAGRAM

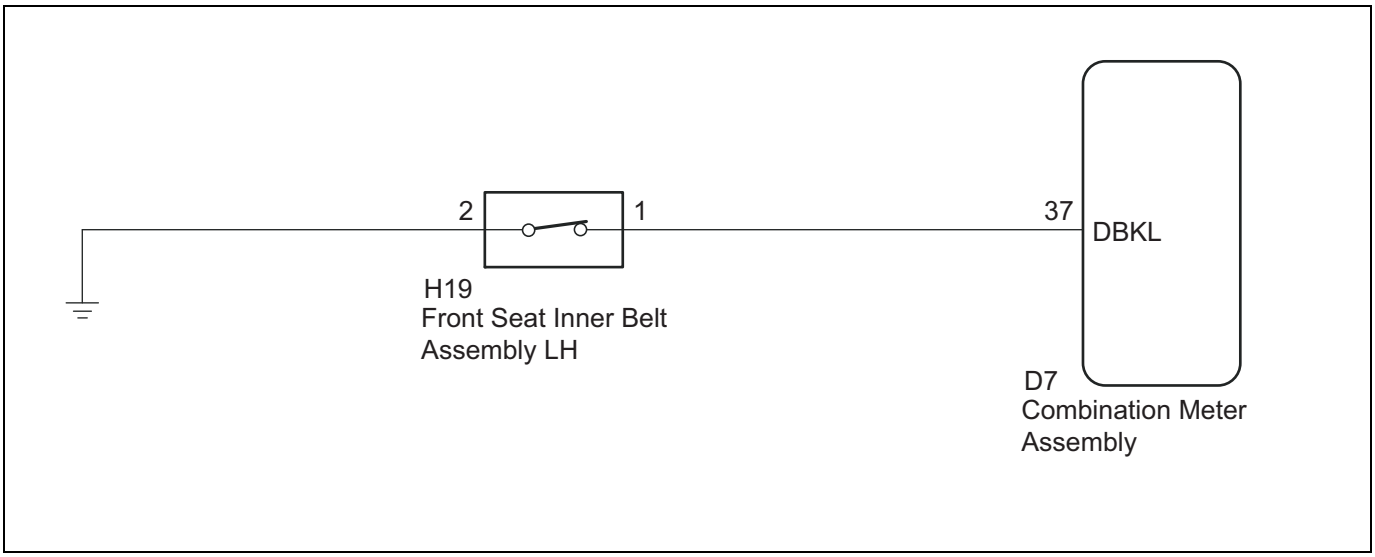

INSPECTION PROCEDURE

1	PERFORM ACTIVE TEST USING SSM4 (DRIVER SIDE SEAT BELT WARNING LIGHT)

(1) Connect the SSM4 to the DLC3.
(2) Turn the ignition switch to ON.
(3) Turn the SSM4 on.
(4) Enter the following menus: [Each System Check] / [Combination Meter] / [Active Test]
(5) Perform the Active Test according to the display on the SSM4.
OK: Driver side seat belt warning light condition can be switched by Active Test.

SB

Combination Meter

Tester Display	Test Part	Control Range	Diagnostic Note
[Driver Side Seat Belt]	Driver side seat belt warning light	ON/OFF	-

NG → REPLACE COMBINATION METER ASSEMBLY

OK

2	INSPECT FRONT SEAT INNER BELT ASSEMBLY LH

(1) Inspect the front seat inner belt assembly LH (See page SB - 24).

NG → REPLACE FRONT SEAT INNER BELT ASSEMBLY LH (See page SB - 21)

OK

3	CHECK HARNESS AND CONNECTOR (FRONT SEAT INNER BELT ASSEMBLY LH - COMBINATION METER ASSEMBLY - BODY GROUND)

(1) Disconnect the H19 front seat inner belt assembly LH connector.
(2) Disconnect the D7 combination meter assembly connector.
(3) Measure the resistance according to the value(s) in the table below.

Standard Resistance

Tester Connection	Condition	Specified Condition
D7-37 (DBKL) - H19-1	Always	Below 1 Ω
H19-1 - Body ground	Always	10 kΩ or higher
H19-2 - Body ground	Always	Below 1 Ω

NG → REPAIR OR REPLACE HARNESS OR CONNECTOR

OK

REPLACE COMBINATION METER ASSEMBLY

Passenger's seat belt warning light is faulty

Circuit description

When the ignition switch is turned ON, the occupant detection ECM transmits the signal which communicates the status of the front seat inner belt ASSY RH and whether the passenger's seat is occupied or not to the airbag control module. The air bag control module transmits this signal to the combination meter ASSY. According to this signal, the tell taillight ASSY turns on or off the seat belt warning light in the combination meter ASSY or makes it blink.

Circuit figure

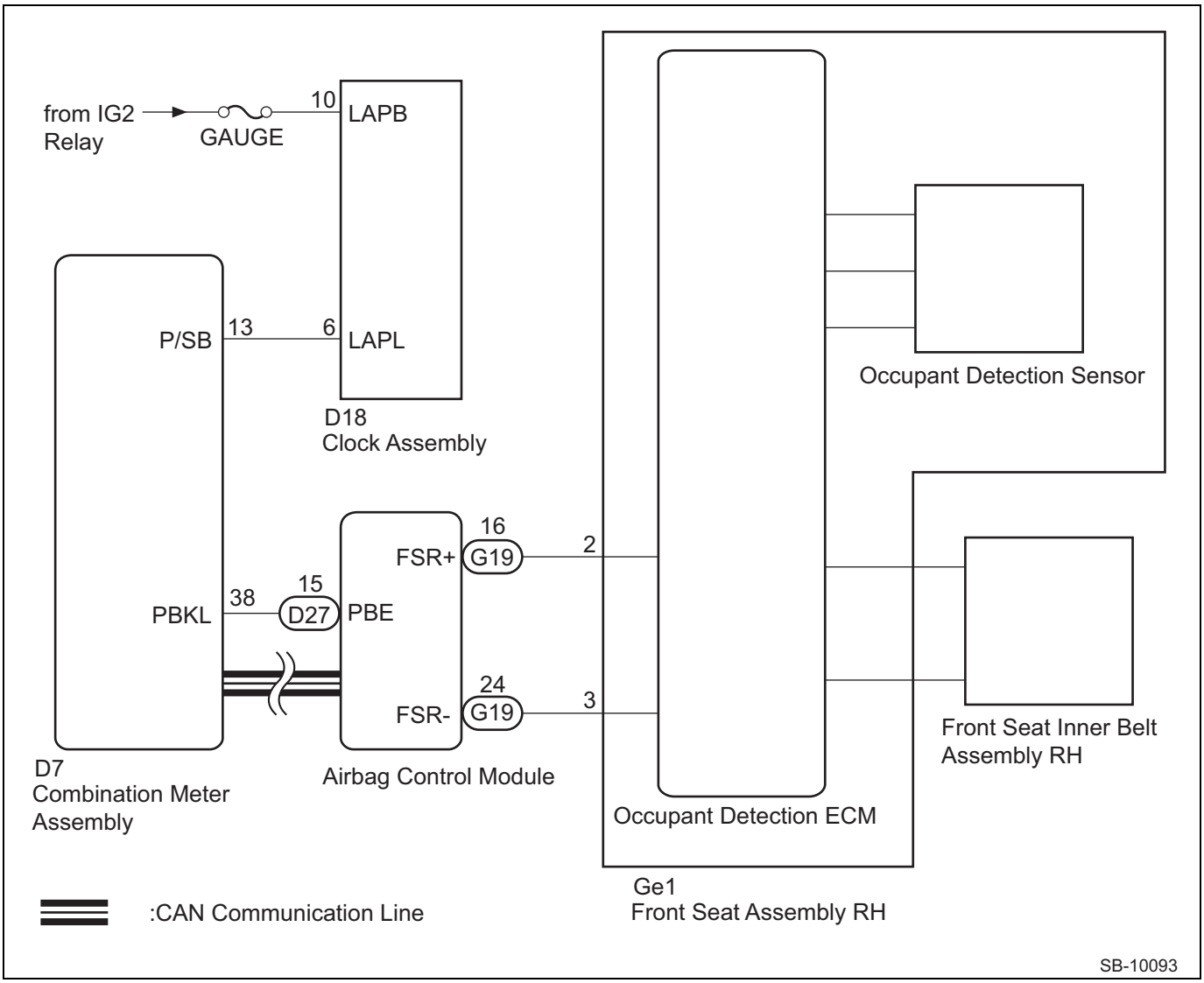

Inspection steps

CAUTION:

- Before performing the following inspection steps, check the fuses related to this system.
- The seat belt warning system uses the CAN communication system. At first, check that the CAN communication system has no faults. Refer to the procedures described in "How to troubleshoot." (Refer to SB - 6)

NOTE:

Before performing the troubleshooting, check the fuse of this circuit.

1	Function check

(1) Occupy the driver's seat and the passenger's seat, and unfasten the seat belts of the both seats.
(2) Turn the ignition switch to ON (engine OFF).
(3) Check that the driver's seat belt warning light in the combination meter and the passenger's seat belt warning light in the clock turn on and the buzzer sounds.
Criteria: The buzzer sounds while the warning lights of the driver's and passenger's seats blink.

NG	Go to Step 11.

OK

2	Function check

(1) In step 1, wait for the buzzer to stop sounding. (Approx. 6 seconds after it has started sounding.)
(2) Unfasten and fasten the driver's and passenger's seat belts.
(3) Check that the driver's and passenger's seat belt warning lights turn on.
Criteria: Each seat belt warning light turns on ←→goes off according to the operation.

NG → Go to Step 7.

OK

3	Function check

(1) In step 2, wait for the buzzer to stop sounding. (Approx. 6 seconds after it has started sounding.)
(2) Start the engine and drive the vehicle at 20 km/h (12 mph) or above.
(3) Check that the driver's and passenger's seat belt warning lights turn on and the warning buzzer sounds.
Criteria: The buzzer sounds while the warning lights of the driver's and passenger's seats blink.

NG → Go to Step 13.

OK

SB

4	Harness inspection

(1) Disconnect the battery ground terminal, and wait for 60 seconds or more.
(2) Disconnect the connectors of the combination meter and the seat belt buckle switch LH.
(3) Check if the harness between the combination meter and the seat belt buckle switch LH is shorted to the battery, open, or shorted to ground.

Inspection terminals	Inspection conditions	Standard value
(D7) No. 37 - chassis ground	Always	Less than 1 V
(D7) No. 37 - (H19(A)) No. 1	Always	Less than 1 Ω
(D7) No. 37 - chassis ground	Always	1 MΩ or more

NG → Repair or replacement of the harness

OK

5	Harness inspection

(1) Measure the resistance between the seat belt buckle switch LH and the chassis ground.

Resistance

Inspection terminals	Inspection conditions	Standard value
(H19(A)) No. 2 - chassis ground	Always	Less than 10 Ω

NG → Repair or replacement of the harness

OK

6	Inspection of the seat belt buckle switch LH

(1) Measure the resistance between the connector terminals of the driver's seat belt switch when the driver's seat belt is unfastened and fastened.

Resistance

Inspection terminals	Inspection conditions	Standard value
(H19(A)) No. 1 - (H19(A)) No. 2	When the seat belt is unfastened	1 MΩ or more
(H19(A)) No. 1 - (H19(A)) No. 2	When the seat belt is fastened	Less than 10 Ω

NG → Replace the front seat inner belt LH (Refer to SB - 21).

SB

OK

Replace either the body control module or the combination meter. Or replace both of them. There is the possibility of transmission error of the body control module or reception error of the combination meter.

7	Inspection of current data

(1) Occupy the passenger's seat.
(2) Select [Current Data Display] to display the data for the "passenger's seat belt switch."
(3) Unfasten and fasten the passenger's seat belt, and then read the data for the seat belt switch. (Refer to SB - 10)
Criteria: The display for seat belt switch turns ON ←→OFF according to the operation of the seat belt buckle.

NG → Go to Step 8.

OK

Go to Step 11.

8	Inspection of the airbag system and the occupant detection system

(1) Perform the inspection following the diagnosis procedures for DTC B1650 of the airbag system. (Refer to RS - 238)
Criteria: No fault is found.

NG → Repair or replace the parts following the procedures for DTC B1650.

OK ↓

9	Inspection of the buckle switch RH

(1) Perform the inspection following the diagnosis procedures for DTC B1655 of the occupant detection system. (Refer to RS - 240)
Criteria: No fault is found.

NG → Repair or replace the parts following the procedures for DTC B1655.

OK ↓

10	Inspection of the airbag control module and the combination meter

(1) Perform the inspection for the airbag control module, the occupant detection sensor, and the seat belt buckle switch RH.
Follow the diagnosis procedures for DTC B16F1 of the airbag system to perform the inspection. (Refer to RS - 65)
Criteria: No fault is found.

NG → Repair or replacement of the parts following the procedures for DTC B16F1

OK ↓

Replace the combination meter. (Refer to ME - 63"Removal")

11	Check of the power supply voltage of the clock assembly

(1) Disconnect the connector of the clock assembly.
(2) Turn the ignition switch to ON.
(3) Measure the voltage between the ignition power supply and the clock assembly.

Voltage

Inspection terminals	Inspection conditions	Standard value
(D18) No. 10 - chassis ground	Always	10 V or more

NG → Check if the harness between the fuse and the clock assembly is open or shorted.

SB

OK

12	Inspection of the grounding circuit of the clock assembly

(1) Turn the ignition switch to OFF.
(2) Measure the resistance between the clock assembly and the chassis ground.

Resistance

Inspection terminals	Inspection conditions	Standard value
(D18) No. 8 - chassis ground	Always	Less than 10 Ω
(D18) No. 14 - chassis ground	Always	Less than 10 Ω

NG → Repair or replacement of the harness

OK

13	Inspection of the harness between the clock assembly and the combination meter

(1) Disconnect the harnesses from the clock assembly and the combination meter.
(2) Measure the resistance between the clock assembly and the combination meter.

Resistance

Inspection terminals	Inspection conditions	Standard value
(D18) No. 6 - (D7) No. 13	Always	Less than 10 Ω

NG → Repair or replacement of the harness

OK

14	Check of the communication between the clock assembly and the combination meter

(1) Remove the clock assembly, and install a normally functioning clock assembly (a new clock assembly).
(2) Connect the connectors ((D18) No. 6 - (D7) No. 13) and turn the ignition switch to ON.
Criteria: The clock assembly properly displays the data.

NG → Replacement of the combination meter case ASSY

OK

Replace the clock assembly.

SB

Passenger's seat belt warning light

Exploded view

For automatic air conditioning system :

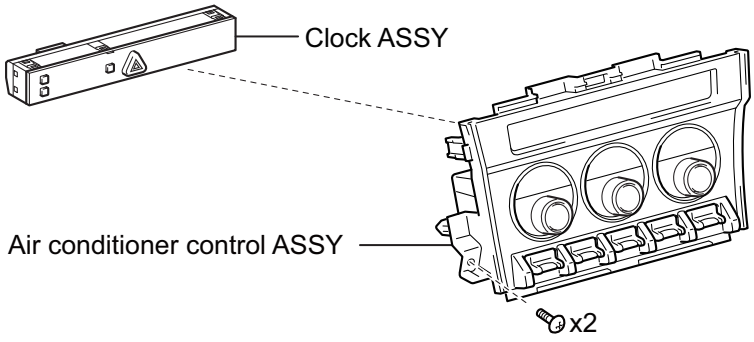

For manual air conditioning system :

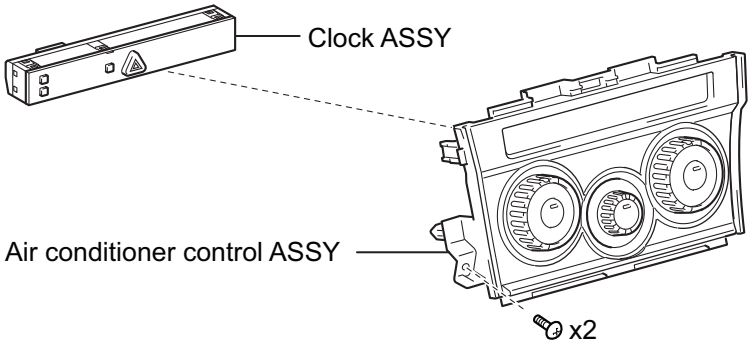

LI-10234

Removal

1. Removal of the air conditioner control ASSY (for automatic air conditioning systems) (Refer to AC - 170)
2. Removal of the air conditioner control ASSY (for manual air conditioning systems) (Refer to AC - 174)

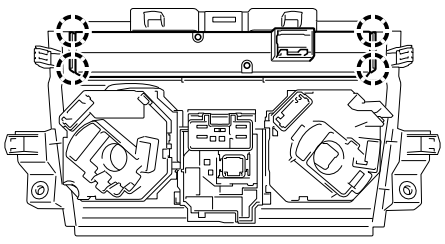

T

3. Removal of the clock ASSY
   (1) Release 4 claws and remove the clock ASSY from the air conditioner control ASSY.

Installation

1. Installation of the clock ASSY
   (1) Engage 4 claws and install the clock ASSY to the air conditioner control ASSY.

SB

2. Installation of the air conditioner control ASSY (for automatic air conditioning systems) (Refer to AC - 171)
3. Installation of the air conditioner control ASSY (for manual air conditioning systems) (Refer to AC - 178)

Unit inspection

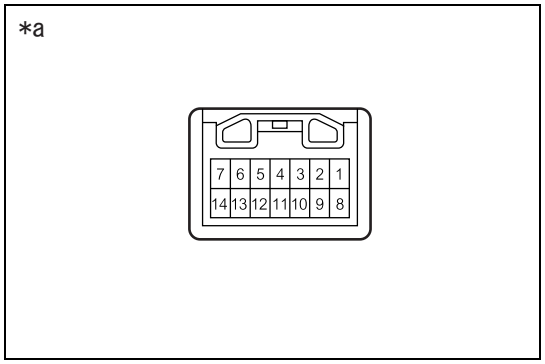

1. Inspection of the clock ASSY
   (1) Check the lighting condition of the passenger's seat belt warning light when the battery is connected to the connector terminals.
   Criteria

Battery connection	Criteria
Battery positive →10 Battery ground →6	The passenger's seat belt warning light turns on.

Captions in illustration

*a	Connector not connected (Clock ASSY)

SB

Front seat inner belt ASSY

Exploded view

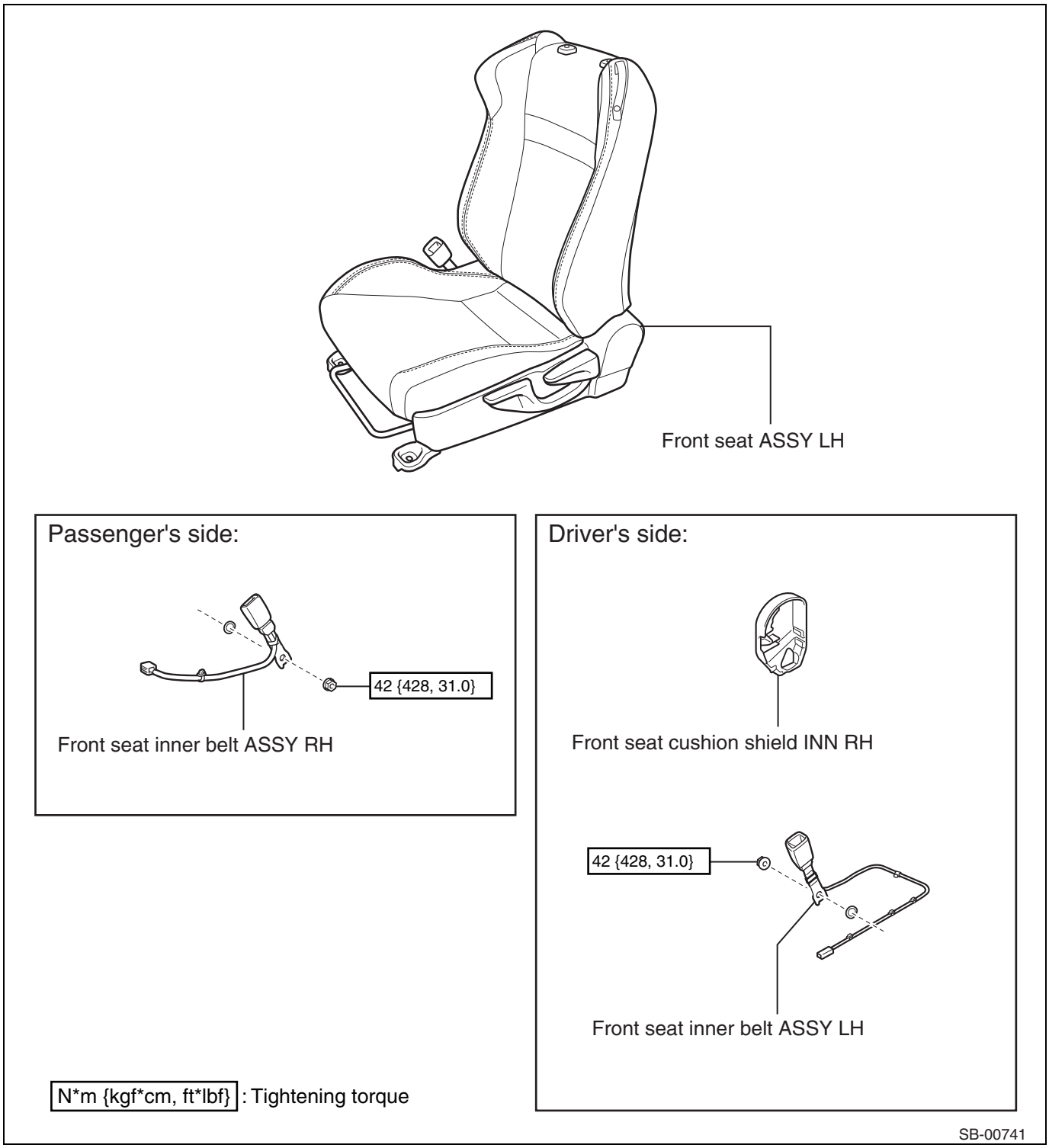

NOTE:
Vehicles with steering wheels on the left are mirrored.

Removal

1. Precautions for handling the device
   NOTE:
   The following procedure is for LH side. Unless otherwise specified, perform the same procedures for the RH side.
2. Removal of the front seat ASSY LH (Refer to SE - 11)

SB

3. Removal of the front seat cushion shield INN LH (driver's side) (Refer to SE - 13)

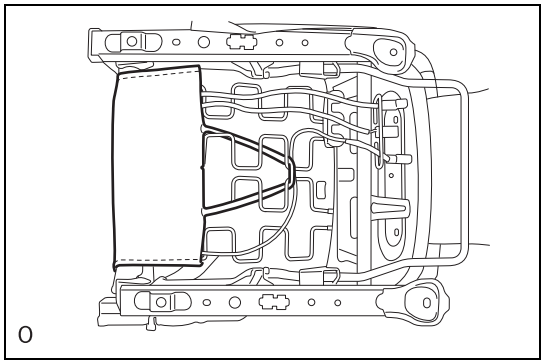

4. Removal of the front seat inner belt ASSY LH (driver's side)
   (1) Remove the rubber band of the separate type front seat backrest cover LH.

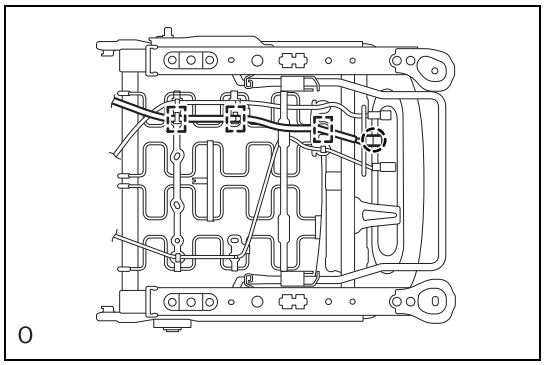

   (2) Release the claw and 3 clamps, and disconnect the wiring harness of the front seat inner belt ASSY LH.

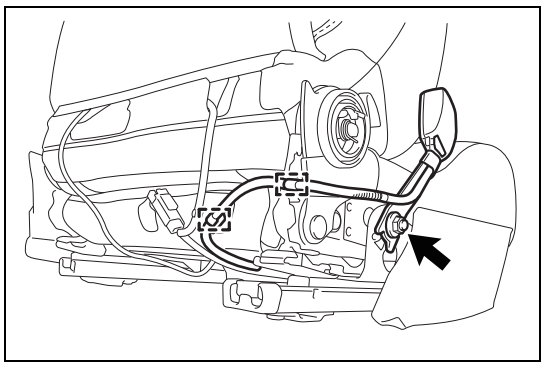

   (3) Release the 2 clamps and disconnect the wiring harness of the front seat inner belt ASSY RH.
   (4) Remove the nut and the washer, and remove the front seat inner belt ASSY RH.

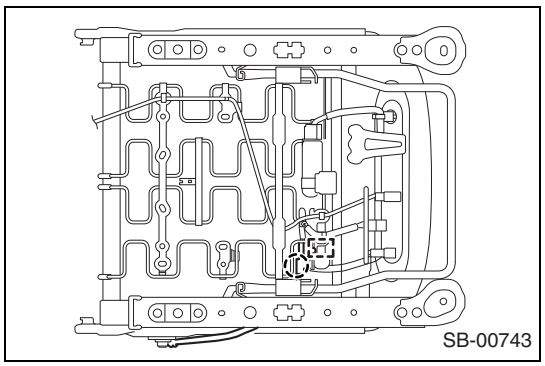

5. Removal of the front seat inner belt ASSY RH (passenger's side)
   (1) Release the clamp.
   (2) Remove the nut and the washer, and remove the front seat inner belt ASSY RH.

SB

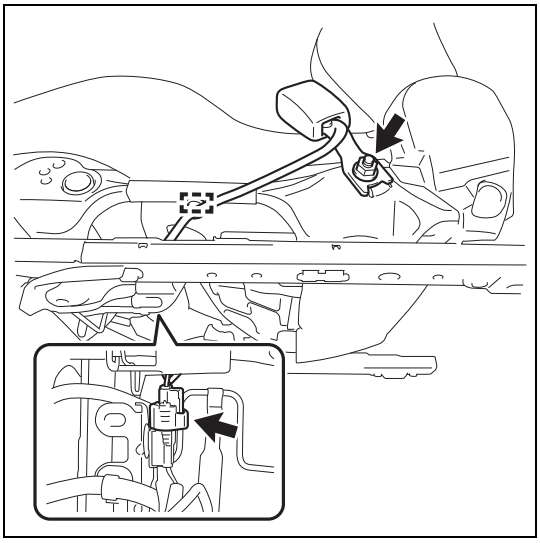

Installation

NOTE:

The following procedure is for LH side. Perform the work for the RH side referring to the procedures for the LH side.

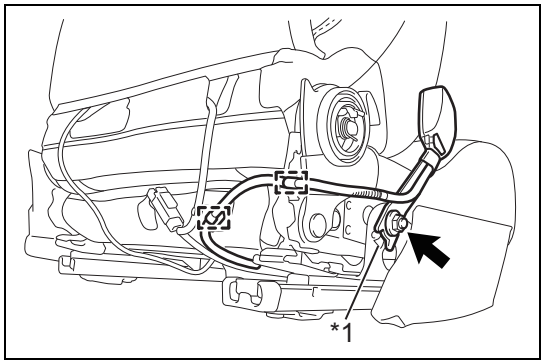

1. Installation of the front seat inner belt ASSY LH (driver's side)
   (1) Install the front seat inner belt ASSY LH with the nut and the washer.
   Standard value:T=42N·m {428kgf·cm} {31.0ft·lbf}
   CAUTION:
   - Be careful not to allow the front seat inner belt ASSY LH ride over the location.
   - Make sure to put the wave washer when installing the front seat inner belt ASSY.

Captions in illustration

*1	Location

   (2) Engage the claw and 5 clamps, and install the wiring harness of the front seat inner belt ASSY LH.
   (3) Install the rubber band of the separate type front seat backrest cover LH.

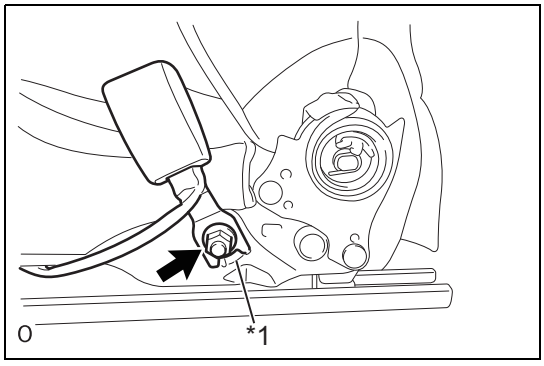

2. Installation of the front seat inner belt ASSY RH (passenger's side)
   (1) Install the front seat inner belt ASSY RH with the nut and the washer.
   Standard value:T=42N·m {428kgf·cm} {31.0ft·lbf}
   CAUTION:
   - Be careful not to allow the front seat inner belt ASSY RH ride over the location.
   - Make sure to put the wave washer when installing the front seat inner belt ASSY.

Captions in illustration

*1	Location

   (2) Engage the claw and the clamp, and install the wiring harness of the front seat inner belt ASSY RH.

3. Installation of the front seat cushion shield INN LH (driver's side) (Refer to SE - 25)
4. Installation of the front seat ASSY LH (Refer to SE - 25)
5. Inspection of airbag warning light (Refer to RS - 53)

SB

Unit inspection

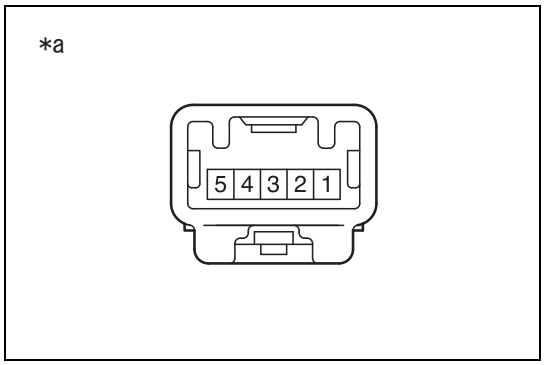

1. Inspection of the front seat inner belt ASSY RH
   (1) Measure the resistance according to the following chart.
   Resistance

Inspection terminals	Inspection conditions	Standard value
1 - 2	Tongue plate not inserted to the buckle	Less than 1 Ω
	Tongue plate inserted to the buckle	Less than 10 kΩ

Captions in illustration

*a	Connector not connected (Front seat inner belt ASSY RH)

SB

Front seat outer belt ASSY

Exploded view

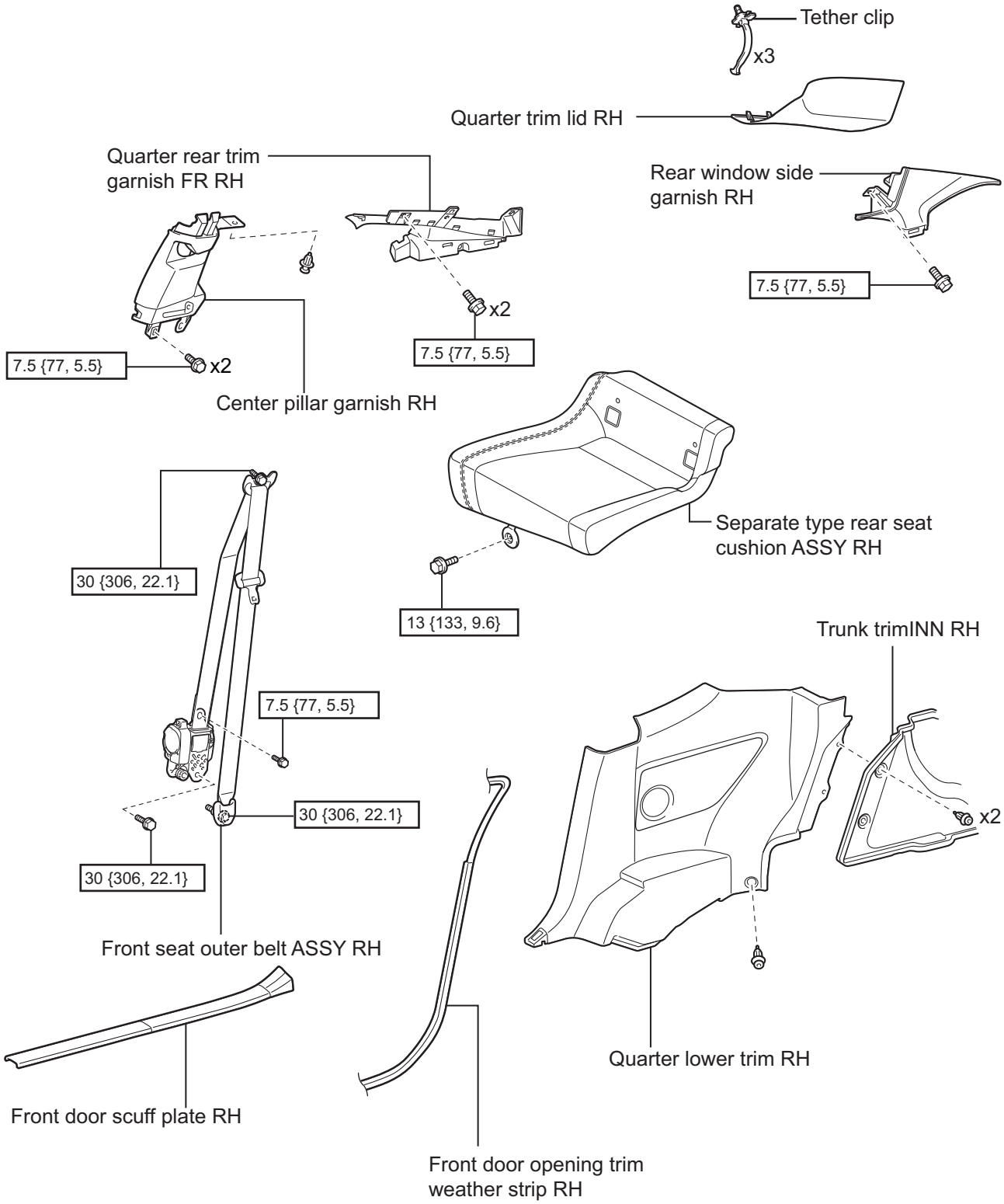

SB

Removal

WARNING:

The following service operations include the works which may affect the SRS airbag system. Before starting work, always be sure to confirm the precautions related to the SRS airbag system. (Refer to RS - 5)

NOTE:

The procedures described below are for the RH side. Perform the same procedures for the LH side.

1. Disconnection of the battery ground terminal
   WARNING:
   The air bag and pretensioner system are fitted with a backup power supply. If you start the work within 60 seconds after disconnecting the battery ground terminal, the air bag may be activated. (Refer to IN - 6)
   CAUTION:
   To avoid damage to the molding, be sure to fully open the door glasses on both driver's and passenger's sides.
2. Removal of separate type rear seat cushion ASSY (Refer to SE - 31)
3. Removal of the front door scuff plate RH (Refer to IT - 48)
4. Removal of the front door opening trim weather strip RH
   (1) Remove the front door opening trim weather strip RH to the extent that the quarter lower trim RH and the center pillar garnish RH can be removed.
5. Removal of quarter lower trim RH (Refer to IT - 49)
6. Removal of quarter trim lid RH (Refer to IT - 49)
7. Removal of the rear window side garnish RH (Refer to IT - 50)
8. Removal of the quarter rear trim garnish FR RH (Refer to IT - 51)

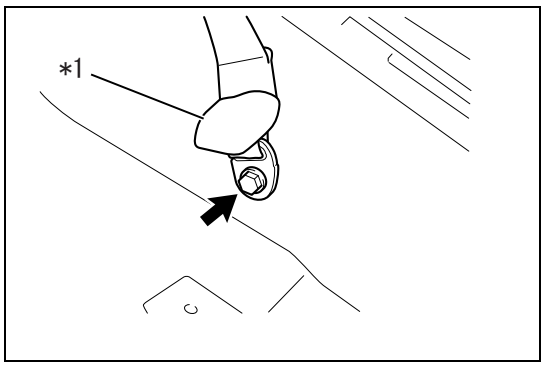

9. Disconnection of front seat outer belt ASSY RH
   (1) Turn over the floor anchor cover.

Captions in illustration

*1	Floor anchor cover

   (2) Loosen the bolt and disconnect the floor anchor part of the front seat outer belt ASSY RH.

10. Removal of the center pillar garnish RH (Refer to IT - 51)

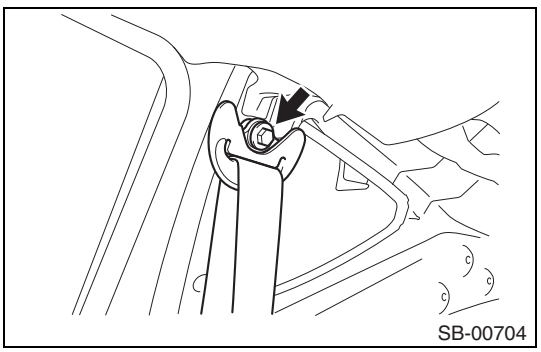

11. Removal of the front seat outer belt ASSY RH
    (1) Loosen the bolt and disconnect the shoulder anchor part of the front seat outer belt ASSY RH.

SB

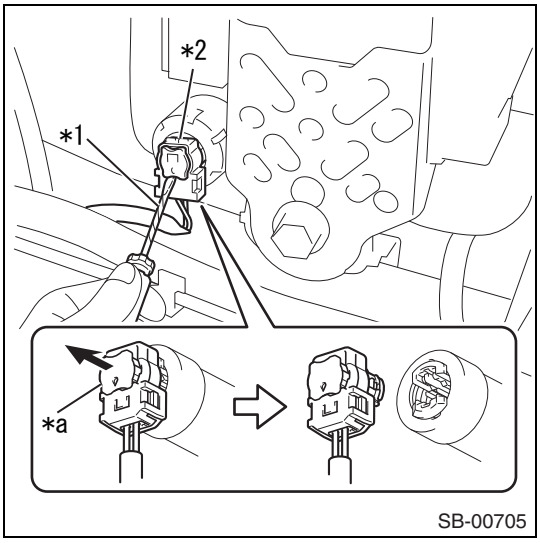

(2) Using the fine flat tip screwdriver wrapped with protective tape, pull off the lock of the pretensioner connector to unlock it.

Captions in illustration

*1	Protective tape
*2	Pretensioner connector
*a	Unlock it.

(3) Using the fine flat tip screwdriver wrapped with protective tape, disconnect the pretensioner connector.

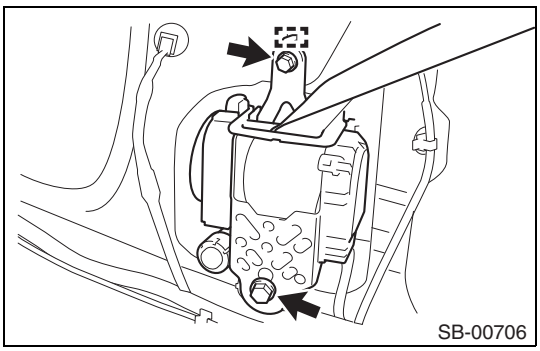

(4) Remove 2 bolts and the guide, and remove the front seat outer belt ASSY RH.

Installation

WARNING:

The following service operations include the works which may affect the SRS airbag system. Before starting work, always be sure to confirm the precautions related to the SRS airbag system. (Refer to RS - 5)

NOTE:

The procedures described below are for the RH side. Perform the same procedures for the LH side.

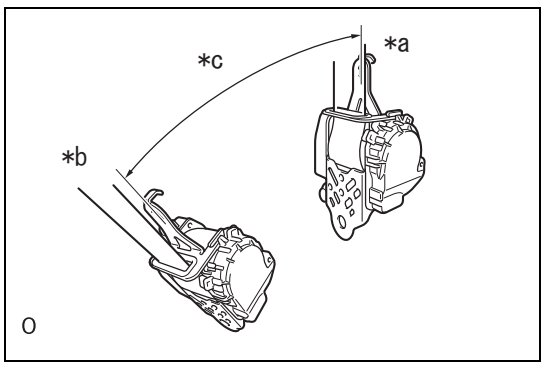

1. Installation of the front seat outer belt ASSY RH

(1) Check of the inclination angle for activating the ELR locking operation

(a) Slowly move the retractor from the installation position, and check that the belt is not locked when the angle is within 12° in all directions, and that it is always locked when the angle is 27° or larger in all directions.

Captions in illustration

*a	Unlocked
*b	Locked
*c	27°

CAUTION:

Do not disassemble the retractor.

SB

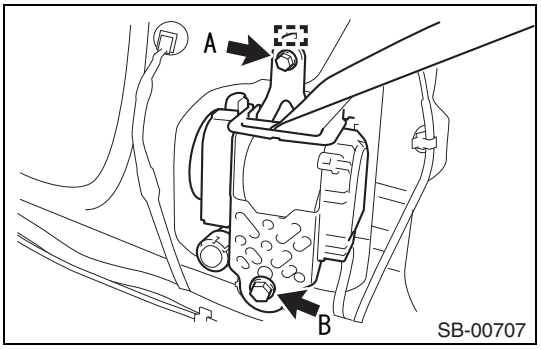

(2) Insert the guide, and install the retractor part of the front seat outer belt ASSY RH with 2 bolts.
Standard value:Bolt A
T=7.5N·m {77kgf·cm} {5.5ft·lbf}
Bolt B
T=30N·m {306kgf·cm} {22.1ft·lbf}

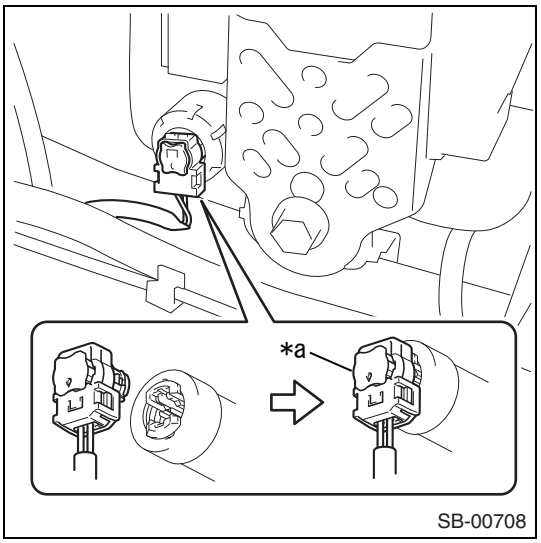

(3) Connect the pretensioner connector to the front seat outer belt ASSY RH.

Captions in illustration

*a	Push and lock it.

(4) Push in the lock of the pretensioner connector.
CAUTION:
Lock it securely.

(5) Tighten the bolt to install the shoulder anchor part of the front seat outer belt ASSY RH.
Standard value:T=30N·m {306kgf·cm} {22.1ft·lbf}

2. Installation of the center pillar garnish RH (Refer to IT - 57)
3. Connection of front seat outer belt ASSY RH
   (1) Tighten the bolt to install the floor anchor part of the front seat outer belt ASSY RH.
   Standard value:T=30N·m {306kgf·cm} {22.1ft·lbf}
   (2) Install the floor anchor cover.
4. Installation of the quarter rear trim garnish FR RH (Refer to IT - 57)
5. Installation of the rear window side garnish RH (Refer to IT - 57)
6. Installation of the quarter trim lid RH (Refer to IT - 57)
7. Installation of the quarter lower trim RH (Refer to IT - 58)
8. Installation of front door opening trim weather strip RH
9. Installation of the front door scuff plate RH (Refer to IT - 58)
10. Installation of separate type rear seat cushion ASSY (Refer to SE - 39)
11. Connection of the battery ground terminal
    Standard value:T=6.0N·m {61kgf·cm} {4.4ft·lbf}
12. Function inspection of the seat belt (Refer to SB - 7)
13. Inspection of airbag warning light (Refer to RS - 53)

SB

Rear seat inner belt ASSY

Exploded view

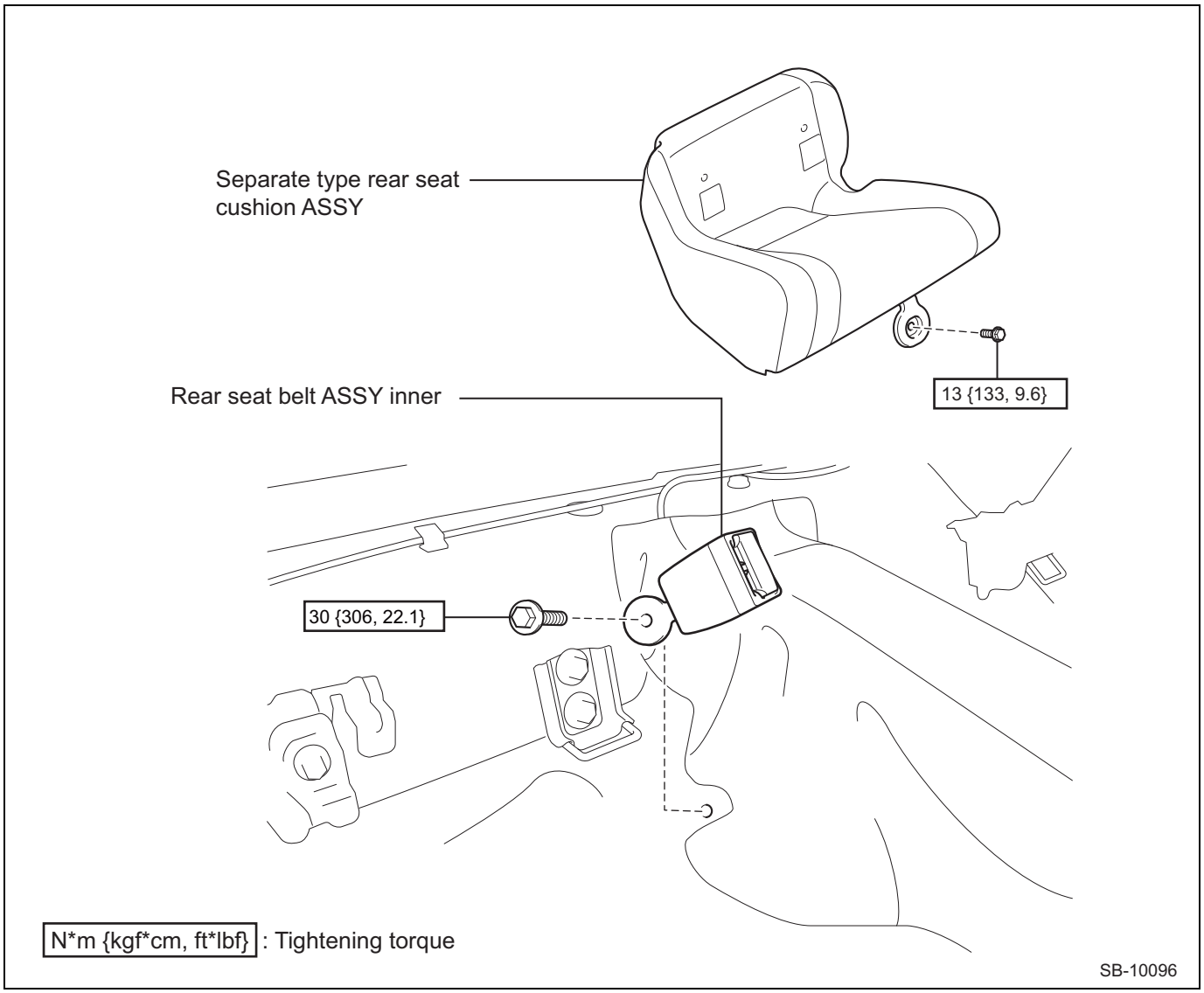

Removal

NOTE:

The procedures described below are for the RH side. Perform the same procedures for the LH side.

1. Removal of separate type rear seat cushion ASSY (Refer to SE - 31)

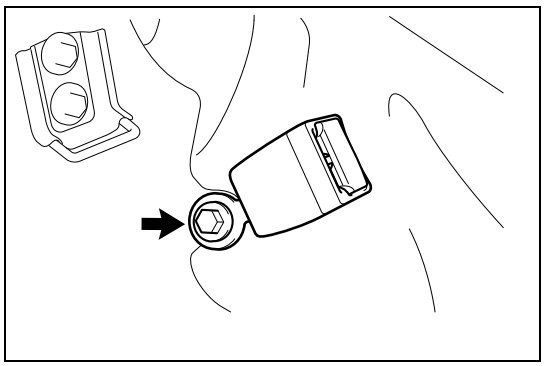

2. Removal of the rear seat belt ASSY inner
   (1) Remove the bolt and remove the rear seat belt ASSY inner.

SB

Installation

NOTE:

The procedures described below are for the RH side. Perform the same procedures for the LH side.

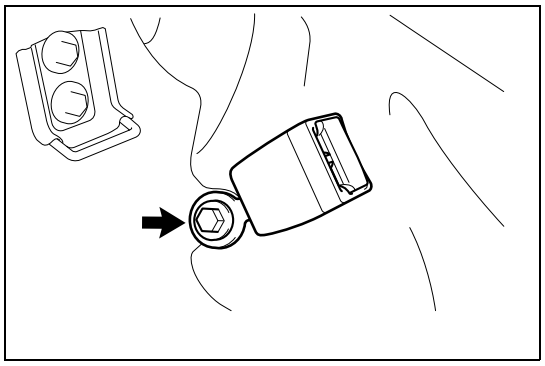

1. Installation of the rear seat belt ASSY inner
   (1) Install the rear seat belt ASSY inner RH with the bolt in the direction shown in the figure.
   Standard value:T=30N·m {306kgf·cm} {22.1ft·lbf}

2. Installation of separate type rear seat cushion ASSY (Refer to SE - 39)

Rear seat outer belt ASSY

Exploded view

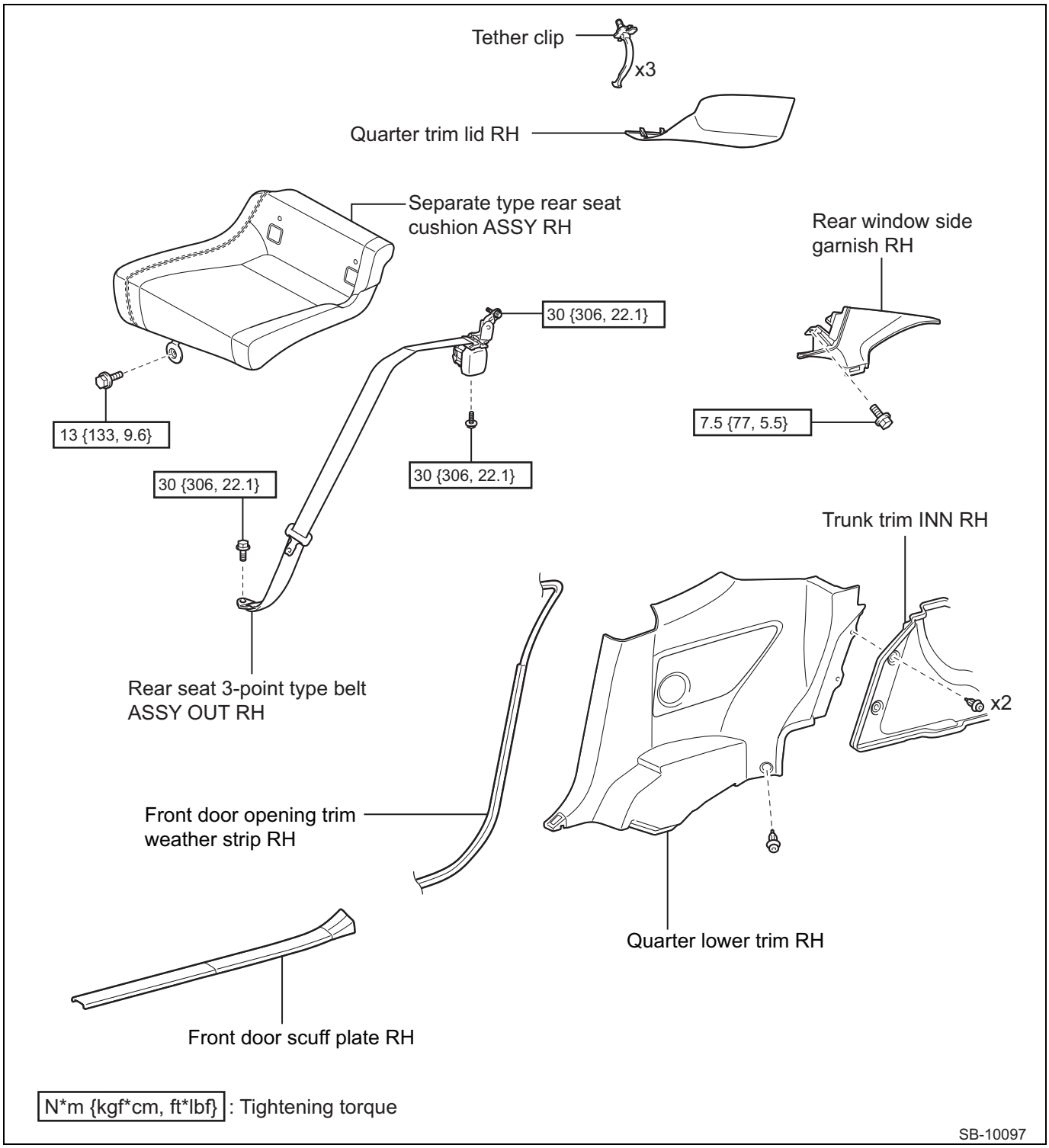

Removal

NOTE:

The procedures described below are for the RH side. Perform the same procedures for the LH side.

1. Removal of separate type rear seat cushion ASSY (Refer to SE - 31)
2. Removal of the front door scuff plate RH (Refer to IT - 48)
3. Removal of the front door opening trim weather strip RH
   (1) Remove the front door opening trim weather strip RH to the extent that the quarter lower trim RH can be removed.

4. Removal of quarter lower trim RH (Refer to IT - 49)
5. Removal of quarter trim lid RH (Refer to IT - 49)
6. Removal of the rear window side garnish RH (Refer to IT - 50)

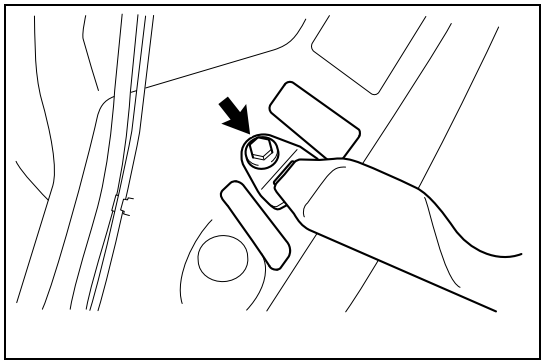

7. Removal of the rear seat 3-point type belt ASSY OUT RH
   (1) Remove the bolt and disconnect the floor anchor part of the rear seat belt ASSY OUT RH.



   (2) Remove the bolt A.
   (3) Loosen the bolt B and remove the rear seat belt ASSY OUT RH.

Installation

NOTE:

SB

The procedures described below are for the RH side. Perform the same procedures for the LH side.

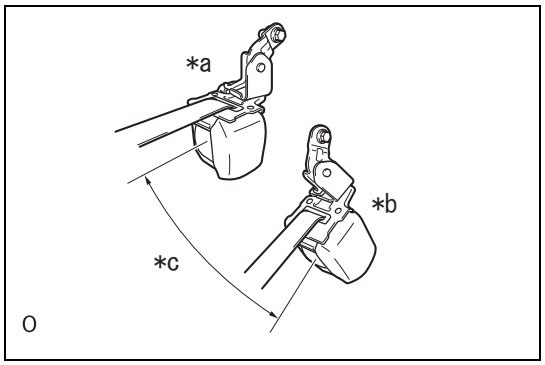

1. Installation of the rear seat 3-point type belt ASSY OUT RH
   (1) Check of the inclination angle for activating the ELR locking operation

Captions in illustration

*a	Unlocked
*b	Locked
*c	27°

   (a) Slowly move the retractor from the installation position, and check that the belt is not locked when the angle is within 12° in all directions, and that it is always locked when the angle is 27° or larger in all directions.
   CAUTION:
   Do not disassemble the retractor.
   (2) Tighten the bolt A and temporally install the retractor part of the rear seat belt ASSY OUT RH.
   (3) Install the retractor part of the rear seat belt ASSY OUT RH with the bolt B.
   Standard value:T=30N·m {306kgf·cm} {22.1ft·lbf}
   Bolts A, B

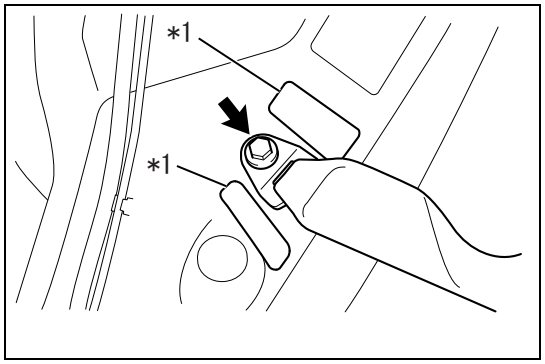

(4) Install the floor anchor part of the rear seat belt ASSY OUT RH with the bolt.
Standard value:T=30N·m {306kgf·cm} {22.1ft·lbf}
CAUTION:
- Pay attention to the direction to install the floor anchor part.
- Be careful not to allow the floor anchor part ride over the location.
- Be careful not to twist the rear seat belt ASSY OUT RH.

Captions in illustration

*1	Location

(5) ELR locking operation check
(a)Check that the belt is locked if quickly pulled out when it is mounted on the vehicle.

2. Installation of the rear window side garnish RH (Refer to IT - 57)
3. Installation of the quarter trim lid RH (Refer to IT - 57)
4. Installation of the quarter lower trim RH (Refer to IT - 58)
5. Installation of front door opening trim weather strip RH
6. Installation of the front door scuff plate RH (Refer to IT - 58)
7. Installation of the separate type rear seat cushion ASSY

Child seat restraining device (ISO-FIX)

Exploded view

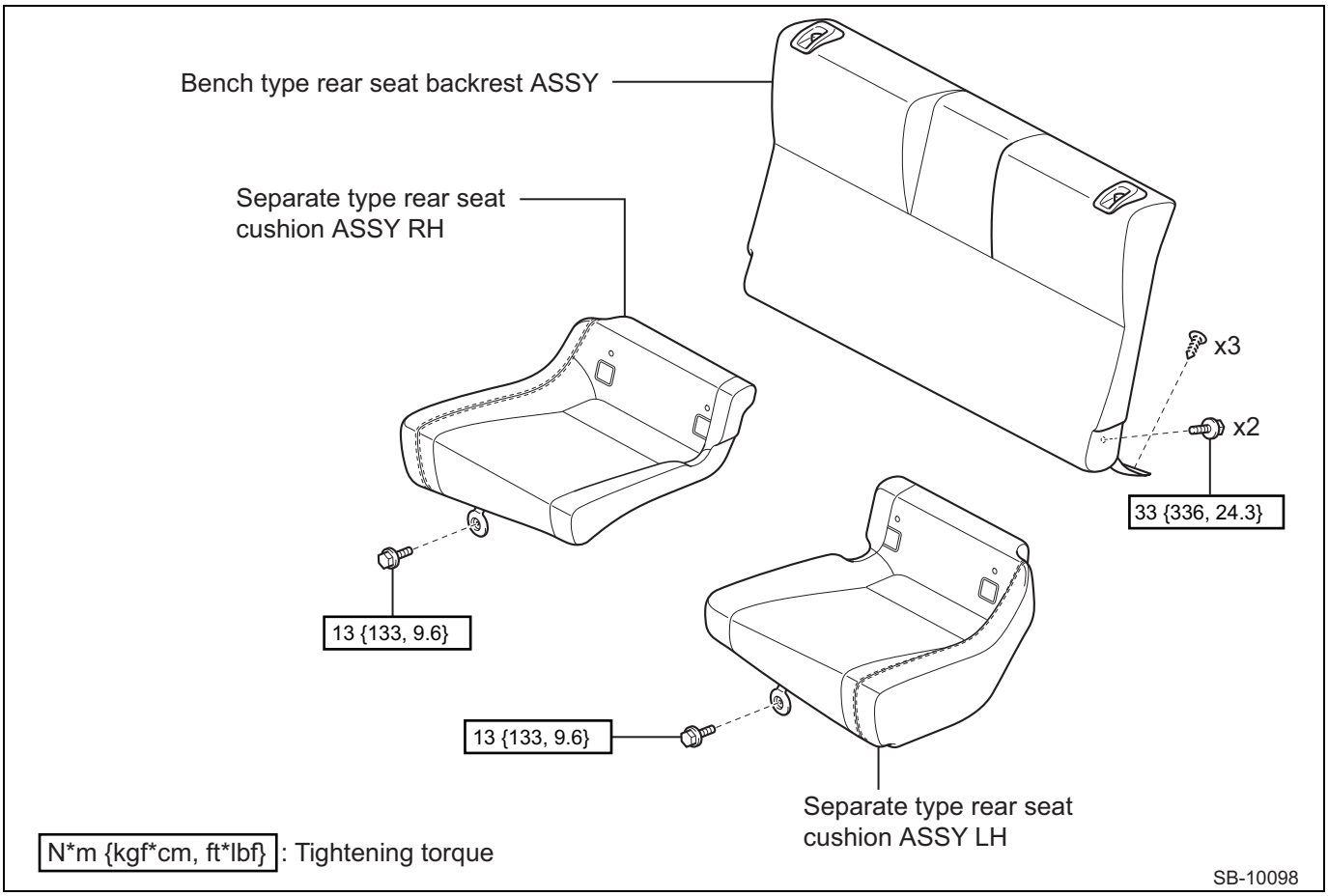

SB

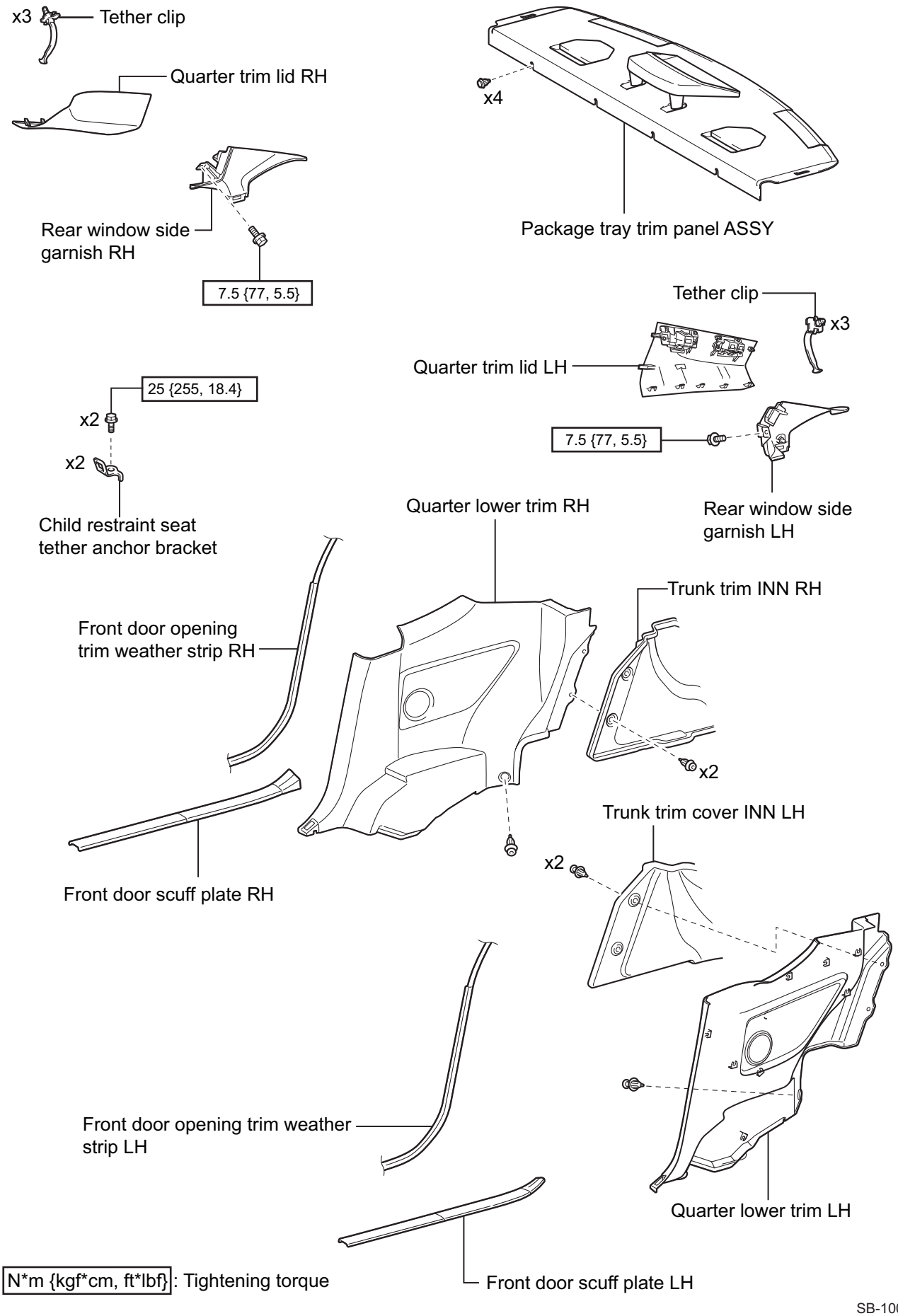
x3
Tether clip
Quarter trim lid RH
x4
Package tray trim panel ASSY
Rear window side garnish RH
7.5 {77, 5.5}
Tether clip
x3
Quarter trim lid LH
7.5 {77, 5.5}
25 {255, 18.4}
x2
x2
Child restraint seat tether anchor bracket
Rear window side garnish LH
Quarter lower trim RH
Trunk trim INN RH
Front door opening trim weather strip RH
x2
Front door scuff plate RH
Trunk trim cover INN LH
x2
Front door opening trim weather strip LH
Quarter lower trim LH
N*m {kgf*cm, ft*lbf}: Tightening torque
Front door scuff plate LH

SB-10019

SB

Removal

1. Removal of separate type rear seat cushion ASSY (Refer to SE - 31)
2. Removal of the separate type rear seat cushion ASSY LH
   NOTE:
   Remove the part in the same manner as RH side.
3. Removal of the bench type rear seat backrest ASSY (Refer to SE - 31)
4. Removal of the front door scuff plate RH (Refer to IT - 48)
5. Removal of front door scuff plate LH
   NOTE:
   Remove the part in the same manner as RH side.
6. Removal of the front door opening trim weather strip RH
   (1) Remove the front door opening trim weather strip RH to the extent that the luggage compartment trim side cover RH can be removed.
7. Removal of front door opening trim weather strip LH
   NOTE:
   Remove the part in the same manner as RH side.
8. Removal of quarter lower trim RH (Refer to IT - 49)
9. Removal of quarter lower trim LH
   NOTE:
   Remove the part in the same manner as RH side.
10. Removal of quarter trim lid RH (Refer to IT - 49)
11. Removal of quarter trim lid LH
    NOTE:
    Remove the part in the same manner as RH side.
12. Removal of the rear window side garnish RH (Refer to IT - 50)
13. Removal of the rear window side garnish LH
    NOTE:
    Remove the part in the same manner as RH side.
14. Removal of package tray trim panel ASSY (Refer to DL - 111)

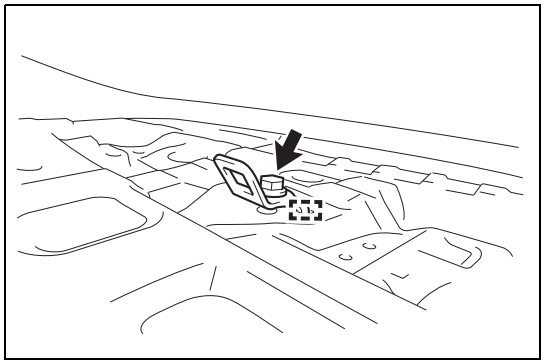

15. Removal of the child restraint seat tether anchor bracket
    (1) Remove the bolt.
    (2) Remove the guide and remove the child restraint seat tether anchor bracket.
    NOTE:
    Remove both parts using the same procedures.

Installation

1. Installation of the child restraint seat tether anchor bracket
   (1) Insert the guide and temporally install the child restraint seat tether anchor bracket.
   (2) Install the child restraint seat tether anchor bracket with the bolt.
   Standard value:T=25N·m {255kgf·cm} {18.4ft·lbf}
   NOTE:
   Install both parts using the same procedures.
2. Installation of package tray trim panel ASSY (Refer to DL - 112)
3. Installation of the rear window side garnish RH (Refer to IT - 57)

4. Installation of rear window side garnish LH
   NOTE:
   Install the part in the same manner as RH side.
5. Installation of the quarter trim lid RH (Refer to IT - 57)
6. Installation of quarter trim lid LH
   NOTE:
   Install the part in the same manner as RH side.
7. Installation of the quarter lower trim RH (Refer to IT - 58)
8. Installation of quarter lower trim LH
   NOTE:
   Install the part in the same manner as RH side.
9. Installation of front door opening trim weather strip RH
10. Installation of front door opening trim weather strip LH
11. Installation of the front door scuff plate RH (Refer to IT - 58)
12. Installation of front door scuff plate LH
    NOTE:
    Install the part in the same manner as RH side.
13. Installation of the bench type rear seat backrest ASSY (Refer to SE - 39)
14. Installation of separate type rear seat cushion ASSY (Refer to SE - 39)
15. Installation of the separate type rear seat cushion ASSY LH

Child seat fixing device (ISO-FIX)

Exploded view

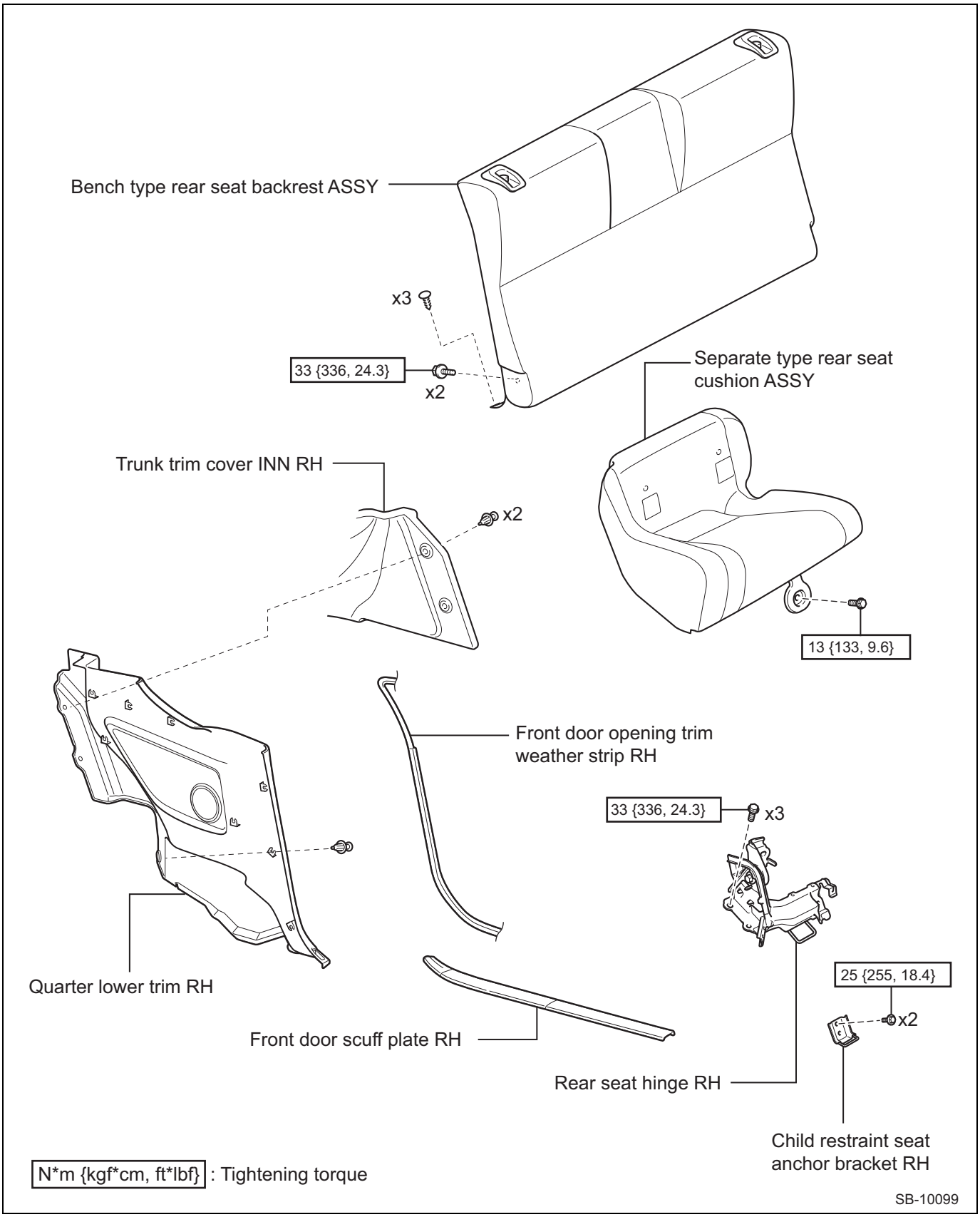

SB

Removal

1. Precautions for handling the device
   NOTE:
   The procedures described below are for the RH side. Perform the same procedures for the LH side.
2. Removal of separate type rear seat cushion ASSY (Refer to SE - 31)
3. Removal of the bench type rear seat backrest ASSY (Refer to SE - 31)

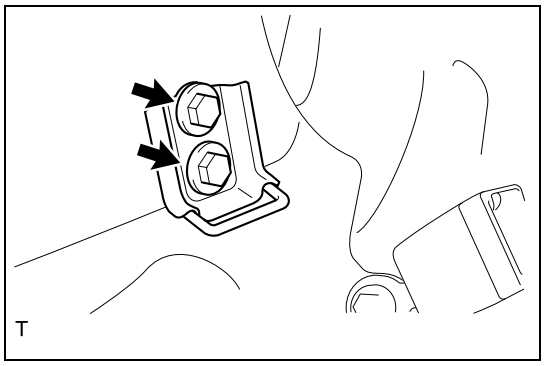

4. Removal of the child restraint seat anchor bracket RH
   (1) Remove 2 bolts and remove the child restraint seat anchor bracket RH.
5. Removal of the front door scuff plate RH (Refer to IT - 48)
6. Removal of the front door opening trim weather strip RH
   (1) Remove the front door opening trim weather strip RH to the extent that the quarter lower trim RH can be removed.
7. Removal of quarter lower trim RH (Refer to IT - 49)

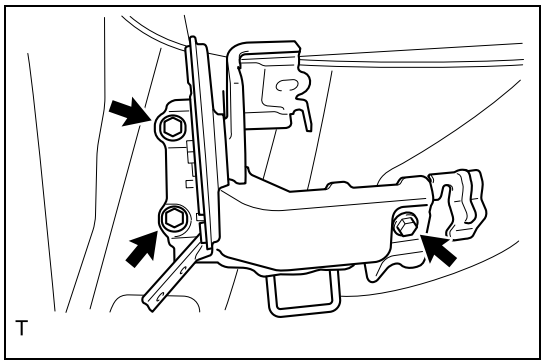

8. Removal of the rear seat hinge RH
   (1) Remove 3 bolts and remove the rear seat hinge RH.

SB

Installation

NOTE:
The procedures described below are for the RH side. Perform the same procedures for the LH side.

1. Installation of the rear seat hinge RH
   (1) Install the rear seat hinge RH with 3 bolts.
   Standard value:T=33N·m {337kgf·cm} {24.3ft·lbf}
2. Installation of the quarter lower trim RH (Refer to IT - 58)
3. Installation of the front door opening trim weather strip RH (Refer to IT - 58)
4. Installation of the front door scuff plate RH (Refer to IT - 58)
5. Installation of the child restraint seat anchor bracket RH
   (1) Install the child restraint seat anchor bracket RH with 2 bolts.
   Standard value:T=25N·m {255kgf·cm} {18.4ft·lbf}
6. Installation of the bench type rear seat backrest ASSY (Refer to SE - 39)
7. Installation of separate type rear seat cushion ASSY (Refer to SE - 39)

SB

Air conditioner

Heater & air conditioner system (for automatic air conditioning system)

Function inspection AC-5
Parts location AC-13
List of diagnostic codes AC-15
Symptom table AC-16
Description of functions AC-18
How to troubleshoot AC-18
Check list for interview AC-21
Checking / clearing diagnostic codes AC-21
Customize function AC-22
Circuit figure AC-23
ECM terminal arrangement AC-25
Data monitor / active test AC-28
B1430 . . . . . AC-31
B1431 . . . . . AC-31
B1432 . . . . . AC-34
B1433 . . . . . AC-34
B1434 . . . . . AC-37
B1435 . . . . . AC-37
B1436 . . . . . AC-39
B1437 . . . . . AC-39
B1441 . . . . . AC-39
B1438 . . . . . AC-42
B1439 . . . . . AC-42
B1443 . . . . . AC-42
B1440 . . . . . AC-45
B1442 . . . . . AC-45
B1446 . . . . . AC-45
B14A1 . . . . . AC-48
B14A2 . . . . . AC-48
U0073 . . . . . AC-52
U0100 . . . . . AC-52
U0101 . . . . . AC-52
U0122 . . . . . AC-52
U0140 . . . . . AC-52
U0155 . . . . . AC-52
U0401 . . . . . AC-52
U0402 . . . . . AC-52
U0416 . . . . . AC-52
U0422 . . . . . AC-52
U0423 . . . . . AC-52
Blower motor circuit AC-53
Magnet clutch relay circuit AC-57

Heater & air conditioner system (for manual air conditioning system)

Function inspection AC-64
Parts location AC-72

Symptom table AC-75
Description of functions AC-75
How to troubleshoot AC-76
Check list for interview AC-78
Circuit figure AC-79
ECM terminal arrangement AC-80
Data monitor / active test AC-80
Blower motor circuit AC-81
Magnet clutch relay circuit AC-85

Refrigerant HFC-134a [R134a]
Precautions AC-91
Adjustment AC-92

Cooler piping
Arrangement drawing AC-94

Air conditioner radiator ASSY
Exploded view AC-95
Removal AC-101
Disassembly AC-108
Assembly AC-116
Installation AC-126

FRESH / RECIRC door actuator
Exploded view AC-129
Removal AC-129
Installation AC-130
Unit inspection AC-130

Mode door actuator
Exploded view AC-131
Removal AC-131
Installation AC-132
Unit inspection AC-133

Air mix door actuator
Exploded view AC-134
Removal AC-134
Installation AC-135
Unit inspection AC-136

Front blower motor (with fan)
Exploded view AC-138
Removal AC-138
Installation AC-138
Unit inspection AC-139

Blower resistor
Exploded view AC-140
Removal AC-140
Installation AC-140
Unit inspection AC-141

Cooler expansion valve
Exploded view AC-142
Removal AC-142
Installation AC-143

AC

Compressor ASSY
Exploded view AC-144
Removal AC-145
Installation AC-147
Unit inspection AC-148

Magnet clutch ASSY
Exploded view AC-149
Removal AC-149
Installation AC-151
Unit inspection AC-152

Cooler condenser ASSY
Exploded view AC-154
Removal AC-154
Disassembly AC-155
Assembly AC-156
Installation AC-156

Cooler thermistor (in-vehicle sensor)
Exploded view AC-158
Removal AC-158
Installation AC-158
Unit inspection AC-159

Cooler thermistor (ambient sensor)
Exploded view AC-160
Removal AC-160
Installation AC-160
Unit inspection AC-161

Cooler thermistor (sunload sensor)
Exploded view AC-162
Removal AC-162
Installation AC-163
Unit inspection AC-163

Cooler thermistor (evaporator sensor)
Exploded view AC-164
Removal AC-165
Installation AC-166
Unit inspection AC-167

Air conditioner pressure switch
On-vehicle inspection AC-168

Air conditioner panel (for automatic air conditioning system)
Exploded view AC-169
Removal AC-170
Disassembly AC-171
Assembly AC-171
Installation AC-171
Unit inspection AC-172

Air conditioner panel (for manual air conditioning system)
Exploded view AC-173
Removal AC-174
Disassembly AC-176
Assembly AC-177

Installation AC-178
Unit inspection AC-179

Relay

Unit inspection AC-181

AC

Heater & air conditioner system (for automatic air conditioning system)

Function inspection

1. Check of cooling performance
   (1) Install the air conditioner tool set to the vehicle.
   (2) Set the vehicle to the following conditions. [*1]

Item	Conditions
Vehicle body	Vehicle parked condition in shade
Door	Full open
A/C switch	ON
Engine speed	2000 r/min
FRESH/RECIRC damper position	RECIRC position
Outlet opening damper position	FACE
Setting temperature	LO (MAX COLD)
Blower speed	HI
Air conditioner inlet opening temperature *2	30 to 35°C {86 to 95°F}
Condenser pressure (gauge high pressure side) *3	1.47 to 1.67 MPaG (15 to 17 kgf/cm^2)

NOTE:
*2···The inlet opening temperature can be judged correctly only in the range from 30 to 35°C {86 to 95°F}. If the temperature is low, postpone the test.
*3···If the condenser pressure (gauge high pressure side) is high, reduce the pressure by watering the condenser. If it is too low, increase the pressure by placing a cover over the condenser.

   (3) Place a wet-and-dry-bulb thermometer (necessary for humidity) at the inlet opening and measure the temperature by inserting the bulb of the dry thermometer at the center of the outlet opening.
   (4) Operate the air conditioner under the conditions in [*1] to make the outlet opening temperature stable. (About 5 to 6 minutes)
   (5) Measure the dry and wet bulb temperatures at the inlet opening and the temperature at the outlet opening.
   (6) Apply the measurement values of the dry/wet bulb temperatures at the inlet opening to the air diagram to obtain the relative humidity.

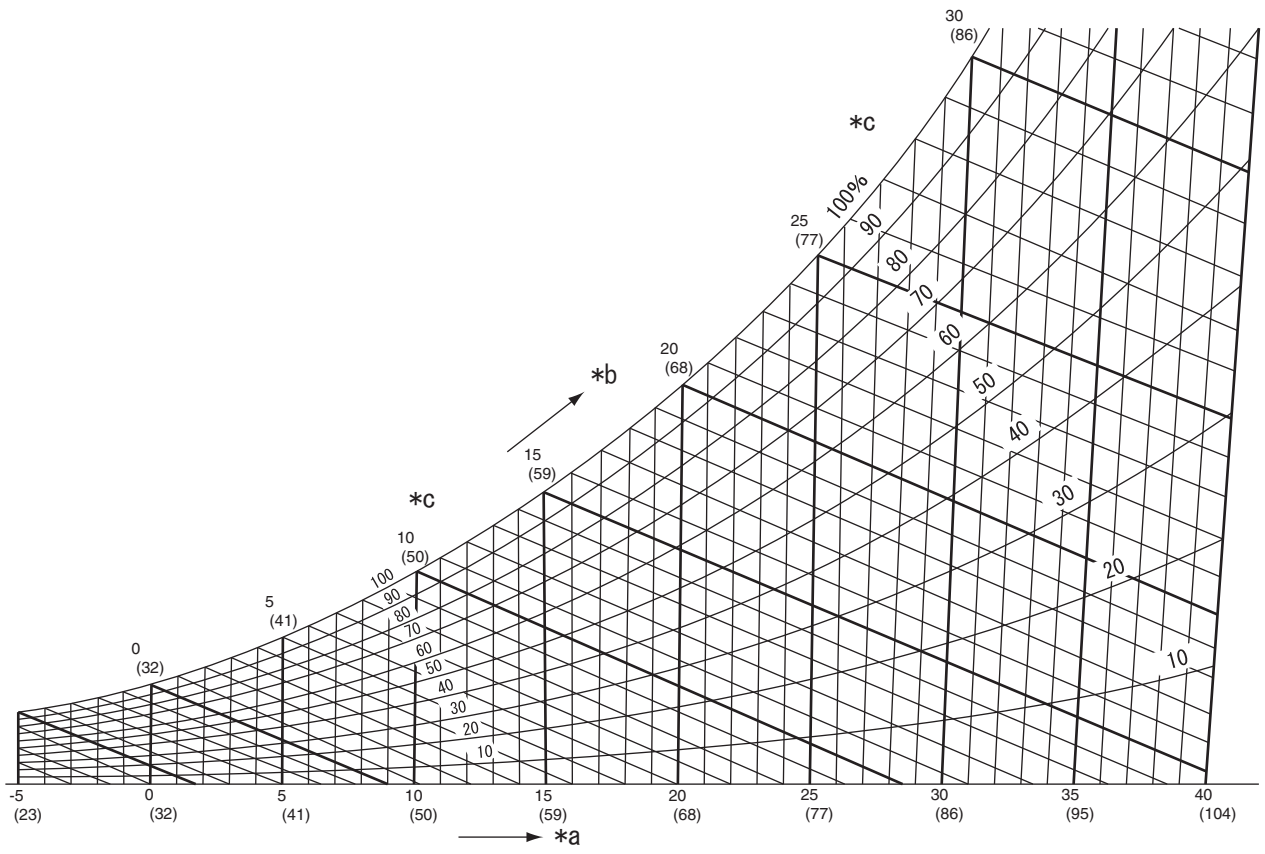

Captions in illustration

*a	Dry bulb temperature (°C {°F})	*b	Wet bulb temperature (°C {°F})
*c	Relative humidity (%)	-	-

AC

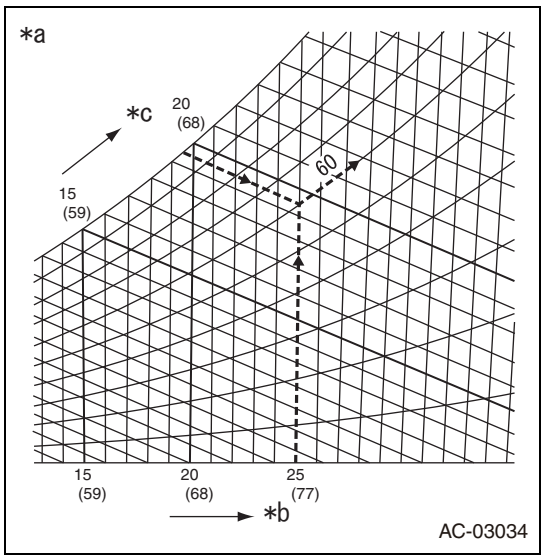

(a)For relative humidity, when the dry bulb temperature of the wet-and-dry-bulb thermometer at the inlet opening is 25°C {77°F} and the wet bulb temperature is 19.5°C {67.1°F}, the intersection of the broken lines in the figure is the relative humidity. In this case, it is 60%.

Captions in illustration

*a	Example
*b	Dry bulb temperature (°C {°F})
*c	Wet bulb temperature (°C {°F})

(7) Check the cooling performance by applying the difference of measured temperatures between the inlet opening and outlet opening and the relative humidity to the standard performance table.

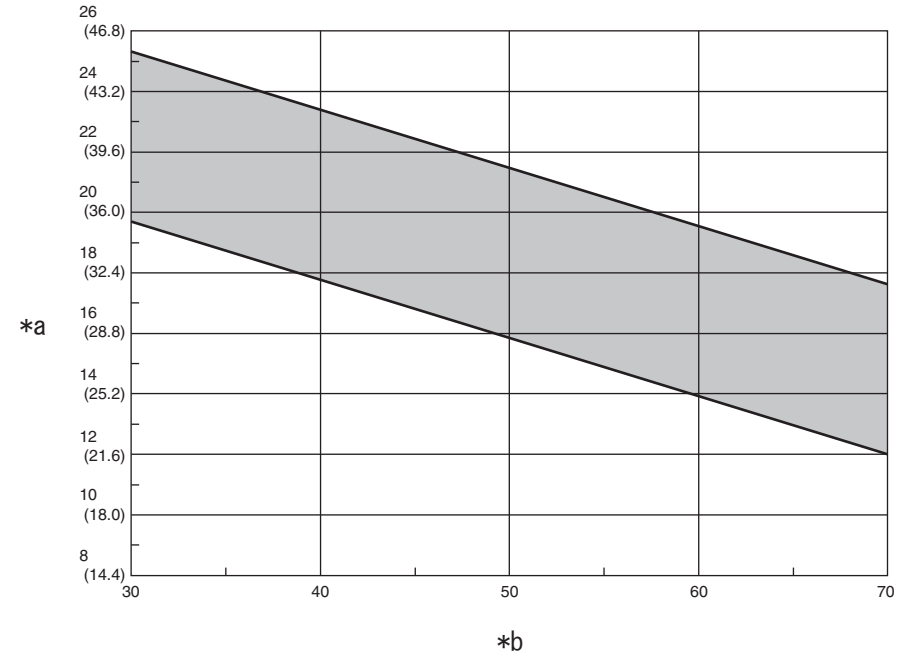

Captions in illustration

*a	Difference between inlet opening and outlet opening temperatures (°C {°F})	*b	Relative humidity (%)

Criteria: The value must be within the shaded area of the diagram.

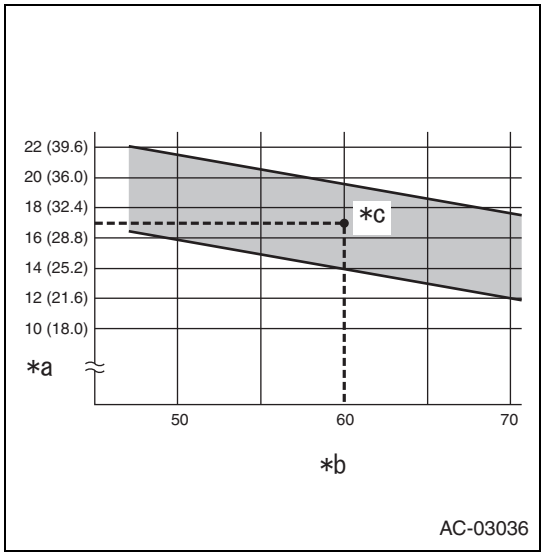

(a)To obtain the cooling performance using the standard performance table, an example when the difference of temperatures between the inlet opening and the outlet opening is 17°C {30.6°F} and the relative humidity is 60% is shown below.

Captions in illustration

*a	Difference between inlet opening and outlet opening temperatures (°C {°F})
*b	Relative humidity (%)
*c	Intersection

AC

2. Check of refrigerant gas pressure
   (1) Check of refrigerant gas pressure with gauge

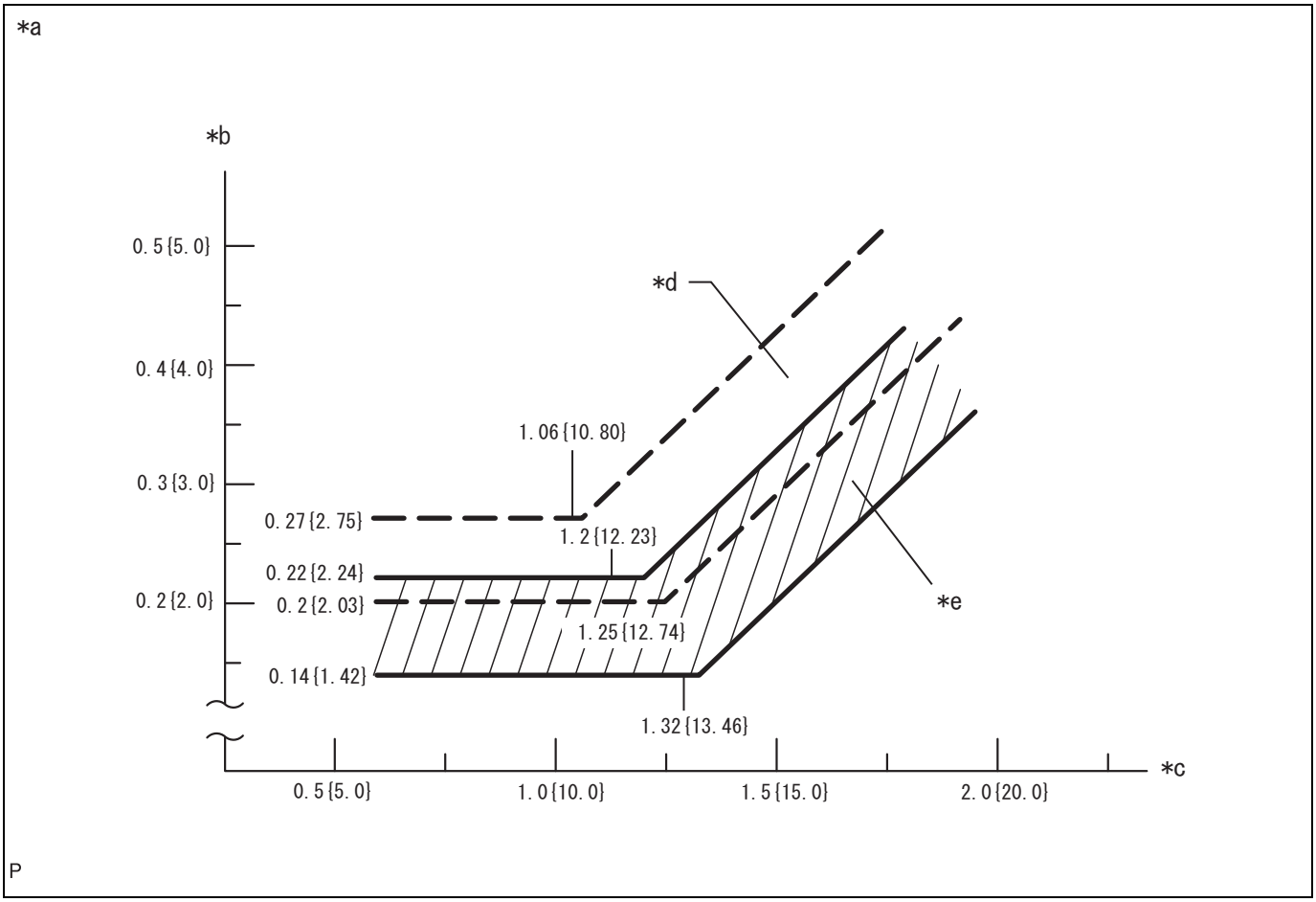

Captions in illustration

*a	Gauge reading reference data	*b	Pressure at low pressure side MPa {kgf/cm^2}
*c	Pressure at high pressure side MPa {kgf/cm^2}	*d	Blower HI range
*e	Blower LO range	-	-

AC

(a)Attach the air conditioner tool set.

(b)Set the vehicle to the following conditions. [*2]

Item	Conditions
Engine	After warming-up
Door	Full open
A/C switch	ON
RECIRC switch	Recirculation
Setting temperature	LO
Blower speed	HI
Air conditioner inlet opening temperature	30 to 35°C {86 to 95°F}

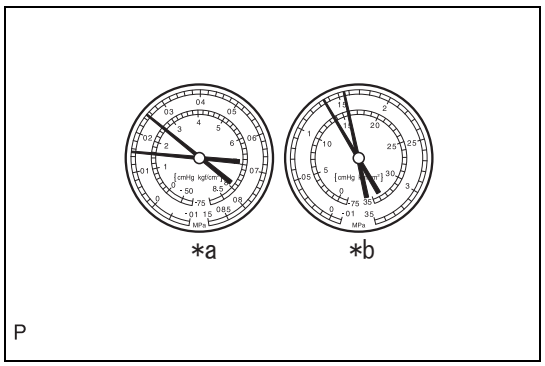

(c)Check the gauge value in [*2].

1. At normal condition

Standard value: 0.13 to 0.20 MPa (1.3 to 2.0 kgf/cm^2) (Low pressure side)

1.47 to 1.67 MPa (15 to 17 kgf/cm^2) (High pressure side)

Captions in illustration

*a	Low pressure side
*b	High pressure side

NOTE:
The illustration indicates the gauge at normal charge level of refrigerant gas.

2. In malfunction

(a) Example: During operation of the air conditioner, the pressure at the low pressure side becomes vacuum or normal.

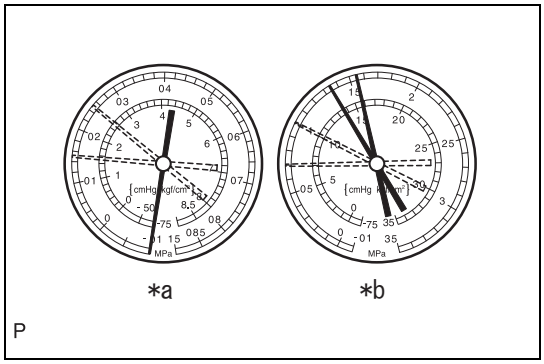

Measurement result

Symptoms	It becomes cold or not cold cyclically.
Cause	Moisture in the cooling system is frozen at the cooler expansion valve. The refrigerant does not circulate temporarily. After ice is melted, normal operation is recovered.
Diagnosis	• The cooler drier is over-saturated. • Moisture of the cooling system is frozen at the expansion valve and it blocks circulation of the refrigerant gas.
Corrective action	• Replace the cooler dryer. • Remove moisture in the cycle by repeating air release. • Inject appropriate level of new refrigerant gas.

Captions in illustration

*a	Low pressure side
*b	High pressure side

NOTE:
The illustration indicates the gauge condition of moisture inclusion in the cooling system.

(b) Example: Both high and low pressure sides are low.

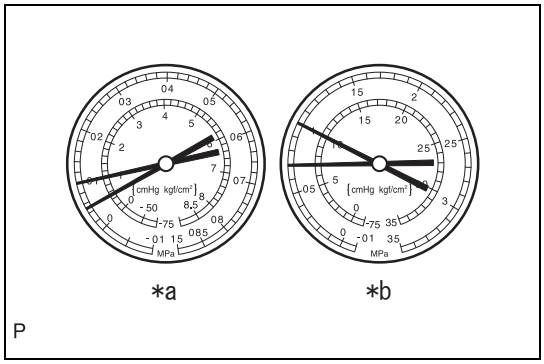

Measurement result

Symptoms	• Poor cooling performance • Cooling performance is not sufficient.
Cause	A part of the cooling system has gas leak.
Diagnosis	• Refrigerant gas is insufficient. • Leak of refrigerant gas
Corrective action	• Check for gas leak. Repair it if necessary. • Inject appropriate level of new refrigerant gas. • If the pressure value is close to 0 when connected to the gauge, check for the leak area. After repair, perform vacuuming.

Captions in illustration

*a	Low pressure side
*b	High pressure side

NOTE:
The illustration indicates the gauge condition of poor cooling.

(c) Example: The pressures at both low and high pressure sides are low and the pipe connected from the cooler condenser ASSY to the air conditioner unit has condensation.

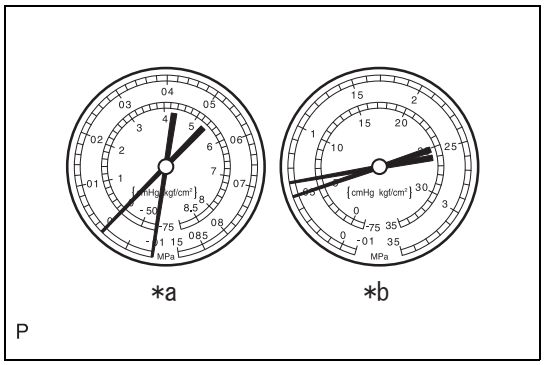

Measurement result

Symptoms	Poor cooling performance
Cause	Dust in the cooler condenser core blocks flow of refrigerant.
Diagnosis	Clogged cooler condenser core

AC

Corrective action	Replace the cooler condenser ASSY.

Captions in illustration

*a	Low pressure side
*b	High pressure side

NOTE:
The illustration indicates the gauge condition of poor refrigerant gas performance.

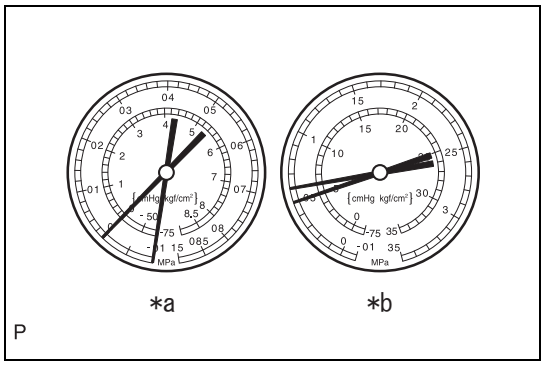

(d) Example: Pressures at both low and high pressure sides are low and the pipe before and after the cooler condenser core and the cooler expansion valve has fogging or condensation.

Measurement result

Symptoms	Poor cooling (it may work in cases)
Cause	• Flow of the refrigerant gas is blocked by moisture or dust of the cooling system. • Flow of the refrigerant gas is blocked by leak of the refrigerant gas from the cooler expansion valve.
Diagnosis	Refrigerant gas does not circulate.
Corrective action	• Check the cooler expansion valve. • Remove dust in the cooler expansion valve with an air gun. • Replace the cooler condenser ASSY. • After vacuuming, inject new refrigerant gas to the appropriate level. • If leak of the refrigerant gas from the cooler expansion valve is found, replace the cooler expansion valve.

Captions in illustration

*a	Low pressure side
*b	High pressure side

AC

NOTE:
The illustration indicates the gauge for no circulation of the refrigerant gas.

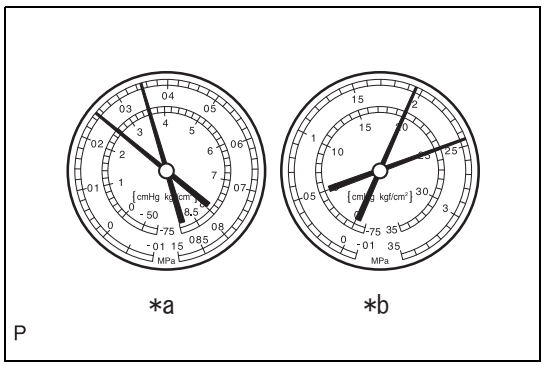

(e) Example: Both high and low pressure sides are too high.

Measurement result

Symptoms	Poor cooling performance
Cause	• Flow of the refrigerant gas is blocked by moisture or dust of the cooling system. • Flow of the refrigerant gas is blocked by leak of the refrigerant gas from the cooler expansion valve.
Diagnosis	• Excessive refrigerant • Cooling of the cooler condenser core is insufficient.
Corrective action	• Clean the cooler condenser core fin. • Check operation of the cooling fan. • Check the refrigerant level and inject the refrigerant to the appropriate level.

Captions in illustration

*a	Low pressure side
*b	High pressure side

NOTE:
The illustration indicates the gauge condition of excess refrigerant gas or insufficient cooling of the cooler condenser core.

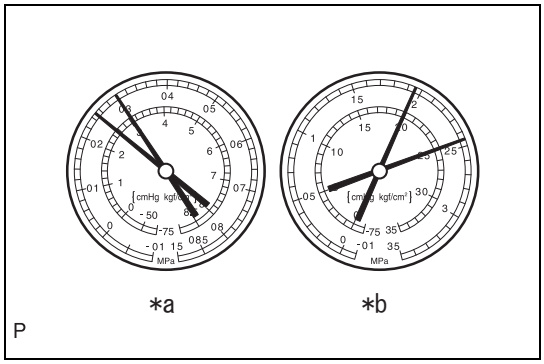

(f) Example: Pressures at both low and high pressure sides are high and the low pressure pipe is too hot to be touched.

Measurement result

Symptoms	Air conditioner does not function.
Cause	Air inside the cooling system
Diagnosis	• Air is included inside the cooling system. • Insufficient vacuuming
Corrective action	• Check if the compressor oil is contaminated or insufficient. • After vacuuming, inject new refrigerant gas.

Captions in illustration

*a	Low pressure side
*b	High pressure side

NOTE:

- Caution: The gauge indicates a value when the cooling system is opened without vacuuming for injection of the refrigerant.
- The illustration indicates the gauge condition of air inclusion in the cooling system.

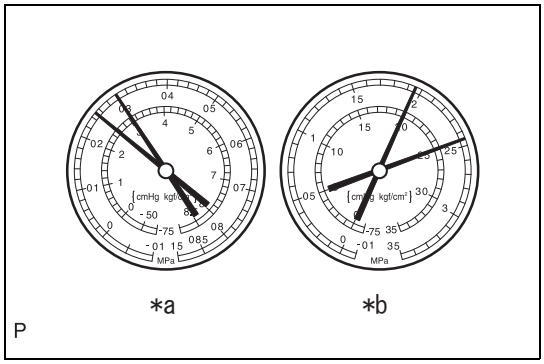

(g) Example: Pressures at both low and high pressure sides are high and the low pressure side has fogging or condensation.

Measurement result

Symptoms	Poor cooling performance
Cause	Problems on cooler expansion valve
Diagnosis	• Excessive refrigerant of low pressure pipe • Excessive opening of cooler expansion valve
Corrective action	Replace the cooler expansion valve.

Captions in illustration

*a	Low pressure side
*b	High pressure side

NOTE:

The illustration indicates the gauge of improper cooler expansion valve.

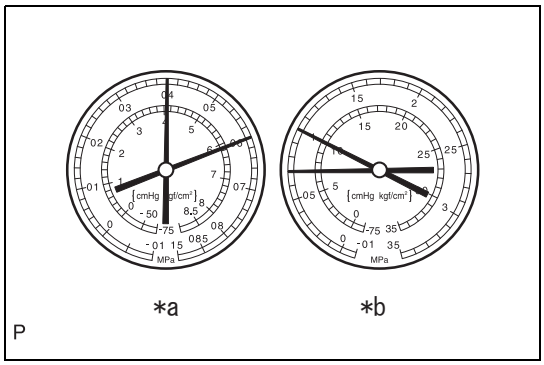

(h) Example: Pressure at the low pressure side is high and pressure at the high pressure side is low.

Measurement result

Symptoms	Air conditioner does not function.
Cause	Compression leak in cooler compressor ASSY
Diagnosis	• Poor compression • Leak from valve or damage to sliding part
Corrective action	Repair or replace the cooler compressor ASSY.

Captions in illustration

*a	Low pressure side

AC

*b	High pressure side

NOTE:
The illustration indicates the gauge of poor compression of the cooler compressor ASSY.

3. Cooler condenser ASSY
   (1) If the cooler condenser ASSY fin is contaminated, clean it with water and dry it with compressor air.
   CAUTION:
   Do not damage the fin of the cooler condenser ASSY.
   (2) If the fin of the cooler condenser ASSY is bent, correct the fin straight with a screwdriver or pliers.
4. Check for refrigerant gas leak
   (1) Using a halogen leak detector, check the pipe joints for leaks.
   (2) If gas leak is found at joints of pipes, check the torque at the joints.

Parts location

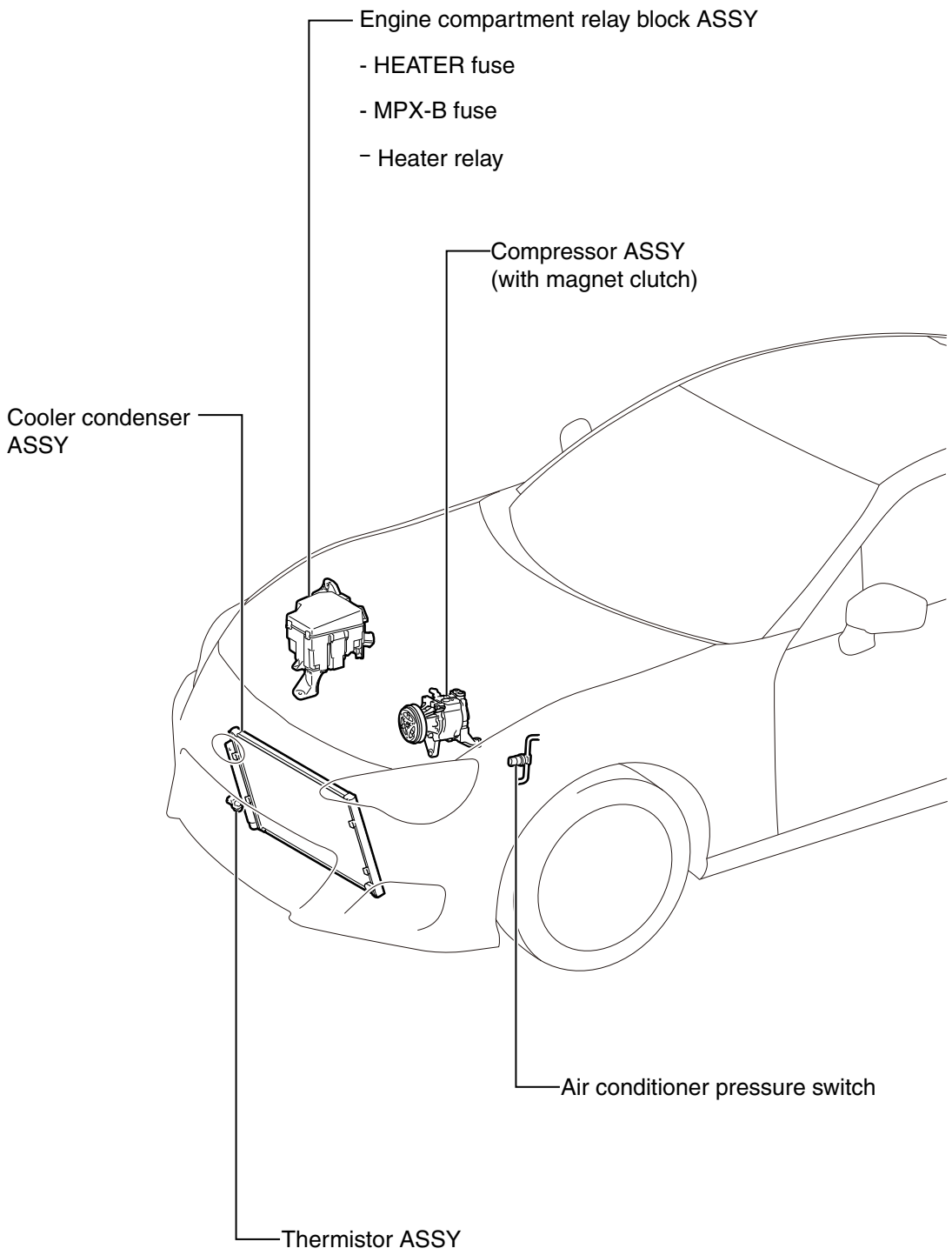

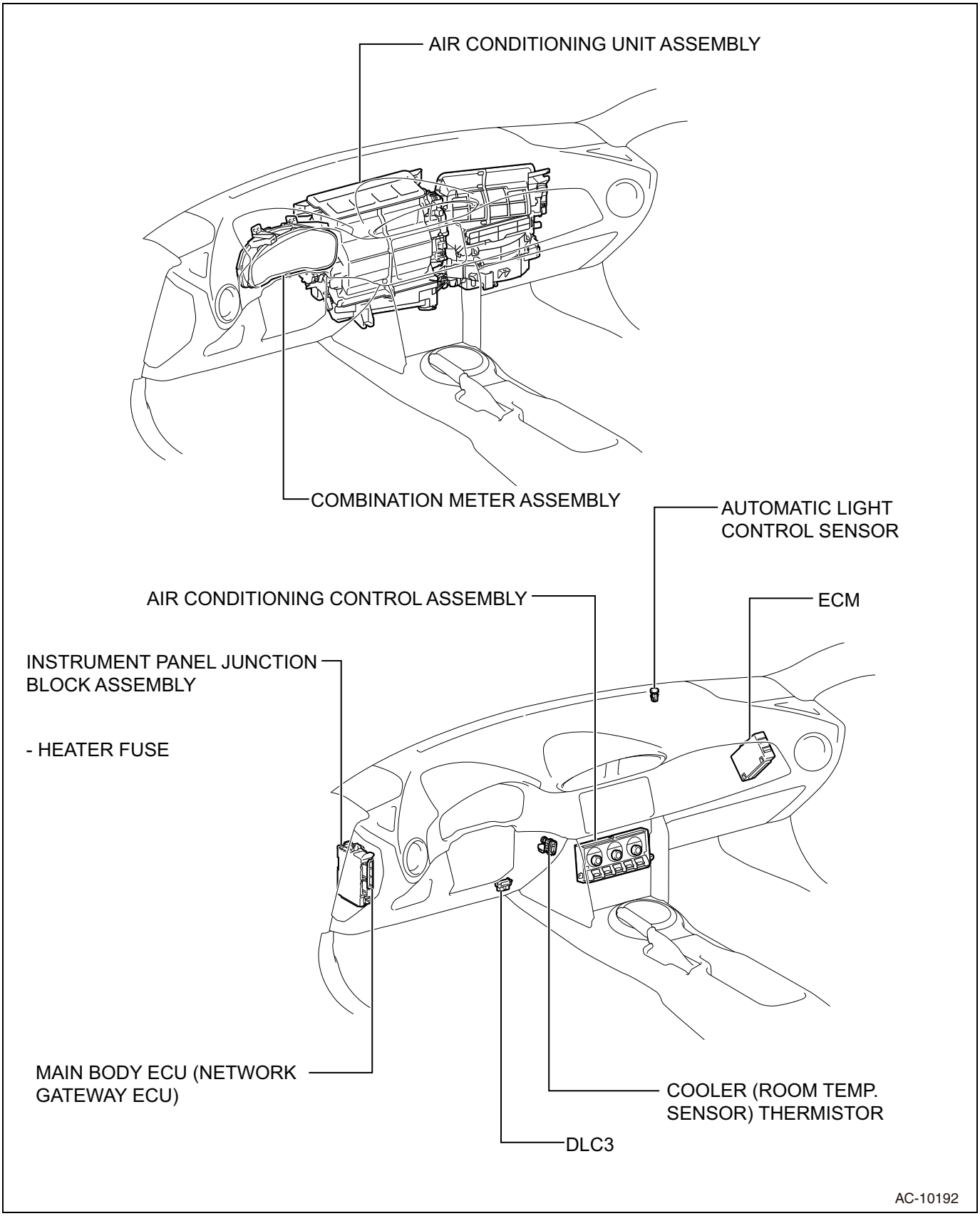
AIR CONDITIONING UNIT ASSEMBLY
COMBINATION METER ASSEMBLY
AUTOMATIC LIGHT CONTROL SENSOR
AIR CONDITIONING CONTROL ASSEMBLY
ECM
INSTRUMENT PANEL JUNCTION BLOCK ASSEMBLY
- HEATER FUSE
MAIN BODY ECU (NETWORK GATEWAY ECU)
COOLER (ROOM TEMP. SENSOR) THERMISTOR
DLC3
AC-10192

AC

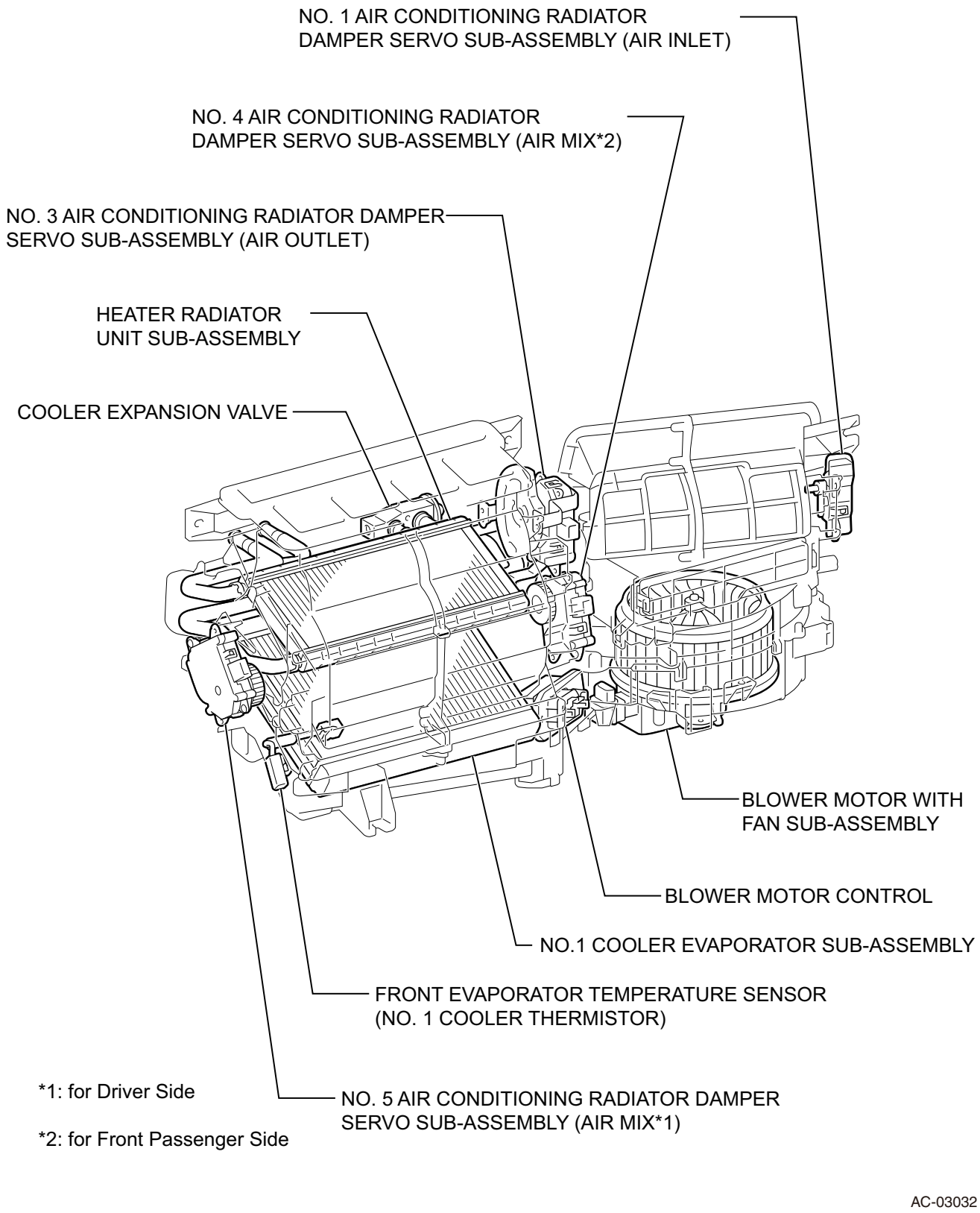

AC

List of diagnostic codes

Diagnostic codes	Diagnostic items	Code memory (SSM4)	Reference pages
B1430	[Room temperature sensor circuit wire break]	0	AC - 31
B1431	[Room temperature sensor circuit short-circuit]	0	AC - 31

Diagnostic codes	Diagnostic items	Code memory (SSM4)	Reference pages
B1432	[Ambient temperature sensor circuit wire break]	0	AC - 34
B1433	[Ambient temperature sensor circuit short-circuit]	0	AC - 34
B1434	[Evaporator sensor circuit wire break]	0	AC - 37
B1435	[Evaporator sensor circuit short-circuit]	0	AC - 37
B1436	[Air mix door actuator potentiometer circuit wire break (passenger's seat)]	0	AC - 39
B1437	[Air mix door actuator potentiometer circuit short-circuit (passenger's seat)]	0	AC - 39
B1438	[Mode Door Actuator Potentiometer Circuit Open]	0	AC - 42
B1439	[Mode Door Actuator Potentiometer Circuit Short]	0	AC - 42
B1440	[Air mix door actuator potentiometer circuit wire break (driver's seat)]	0	AC - 45
B1441	[Air mix door actuator lock (passenger's seat)]	0	AC - 39
B1442	[Air mix door actuator potentiometer circuit short-circuit (driver's seat)]	0	AC - 45
B1443	[Mode Door Actuator Lock]	0	AC - 42
B1446	[Air mix door actuator lock (driver's seat)]	0	AC - 45
B14A1	[Sunload Sensor Circuit Open]	-	AC - 48
B14A2	[Sunload Sensor Circuit Short]	0	AC - 48
U0073	[CAN Communication Failure]	0	AC - 52
U0100	[Lost Communication With ECM/PCM "A"]	0	AC - 52
U0101	[Lost Communication With TCM]	0	AC - 52
U0122	[Lost Communication With Vehicle Dynamics Control Module]	0	AC - 52
U0140	[Lost Communication With Body Control Module]	0	AC - 52
U0155	[Lost Communication With Instrument Panel Cluster (IPC) Control Module]	0	AC - 52
U0401	[Invalid Data Received From ECM/PCM "A"]	0	AC - 52
U0402	[Invalid Data Received From TCM]	0	AC - 52
U0416	[Invalid Data Received From VDC]	0	AC - 52
U0422	[Invalid Data Received From Body Control Module]	0	AC - 52
U0423	[Invalid Data Received From Instrument Panel Cluster Control Module]	0	AC - 52

Symptom table

AC

Symptoms	Inspection items	Reference pages
A/C system does not operate at all.	Wire harness and connector (grounding and power supply system)	-
	Fuse [MPX-B, HEATER, HEATER]	AC - 13
	Air conditioner control ASSY	AC - 25
	CAN communication system	AC - 52
Switch operation is not accepted.	Air conditioner control ASSY	AC - 25
	Wire harness and connector	-
Blower motor (with fan) does not rotate.	Blower motor circuit	AC - 53
	Air conditioner control ASSY	AC - 25
	Blower register (power transistor)	-
Blower motor (with fan) speed does not change.	Blower motor circuit	AC - 53
	Air conditioner control ASSY	AC - 25
	Blower register (power transistor)	-
Difficult cooling	Check of refrigerant level	AC - 5
	Check of refrigerant pressure	AC - 7
	Cooler expansion valve	AC - 142
	Compressor ASSY (with magnet clutch)	AC - 148
	Air conditioner control ASSY	AC - 25

Symptoms	Inspection items	Reference pages
Cold air not emitted	Check of refrigerant level	AC - 5
	Check of refrigerant pressure	AC - 7
	Air conditioner pressure switch	AC - 168
	Compressor ASSY (with magnet clutch)	AC - 148
	Air mix damper servo circuit (driver's seat)	AC - 45
	Air mix damper servo circuit (passenger's seat)	AC - 39
	Cooler thermistor (in-vehicle sensor)	AC - 31
	Automatic light control sensor	AC - 48
	Thermistor ASSY	AC - 34
	Cooler thermistor NO.1 (after-evaporator sensor)	AC - 37
	Cooler expansion valve	AC - 142
	CAN communication system	AC - 52
	Air conditioner control ASSY	AC - 25
	Wire harness and connector	-
	Heater relay (clutch relay)	AC - 181
	Aspirator hose	AC - 126
Warm air not emitted	Air mix damper servo circuit (driver's seat)	AC - 45
	Air mix damper servo circuit (passenger's seat)	AC - 39
	Cooler thermistor (in-vehicle sensor)	AC - 31
	Automatic light control sensor	AC - 48
	Thermistor ASSY	AC - 34
	CAN communication system	AC - 52
	Air conditioner control ASSY	AC - 25
	Wire harness and connector	-
	Aspirator hose	AC - 126
Warmer or colder than setting temperature	Check of refrigerant level	AC - 5
	Check of refrigerant pressure	AC - 7
	Air mix damper servo circuit (driver's seat)	AC - 45
	Air mix damper servo circuit (passenger's seat)	AC - 39
	Cooler thermistor (in-vehicle sensor)	AC - 31
	Air inlet at the front of the cooler thermistor (in-vehicle sensor) (clogged dust or foreign matter)	-
	Automatic light control sensor	AC - 48
	Thermistor ASSY	AC - 34
	Cooler expansion valve	AC - 142
	Radiator heater unit	-
	Wire harness and connector	-
	CAN communication system	AC - 52
	Air conditioner control ASSY	AC - 25
	Heater relay (clutch relay)	AC - 181
	Aspirator hose	AC - 126
Temperature control is disabled (temperature does not change).	Air mix damper servo circuit (driver's seat)	AC - 45
	Air mix damper servo circuit (passenger's seat)	AC - 39
	Wire harness and connector	-
	Air conditioner control ASSY	AC - 25
	Aspirator hose	AC - 126
Temperature control is disabled (MAX HOT or MAX COLD occurs).	Cooler thermistor (in-vehicle sensor)	AC - 31
	Thermistor ASSY	AC - 39
	Wire harness and connector	-
	CAN communication system	AC - 52
	Air conditioner control ASSY	AC - 25
	Aspirator hose	-

Symptoms	Inspection items	Reference pages
Inlet opening is not changed.	Air conditioner control ASSY	AC - 25
	Wire harness and connector	-
	Damper servo (FRESH/RECIRC)	AC - 108
Indicator does not illuminate.	Air conditioner control ASSY	AC - 25
	Wire harness and connector	-
Diagnostic code is not written (At IG ON, the set mode is erased).	Air conditioner control ASSY	AC - 25
Outlet opening is not changed.	Damper servo (mode change)	AC - 112
	Air conditioner control ASSY	AC - 25
	Wire harness and connector	-
Illumination does not turn on, or does not dim.	Air conditioner control ASSY	AC - 25
	Wire harness and connector	-

Description of functions

1. Communication system function
   (1) The heater & air conditioner system sends and receives signals with computers and devices through the CAN communication system.

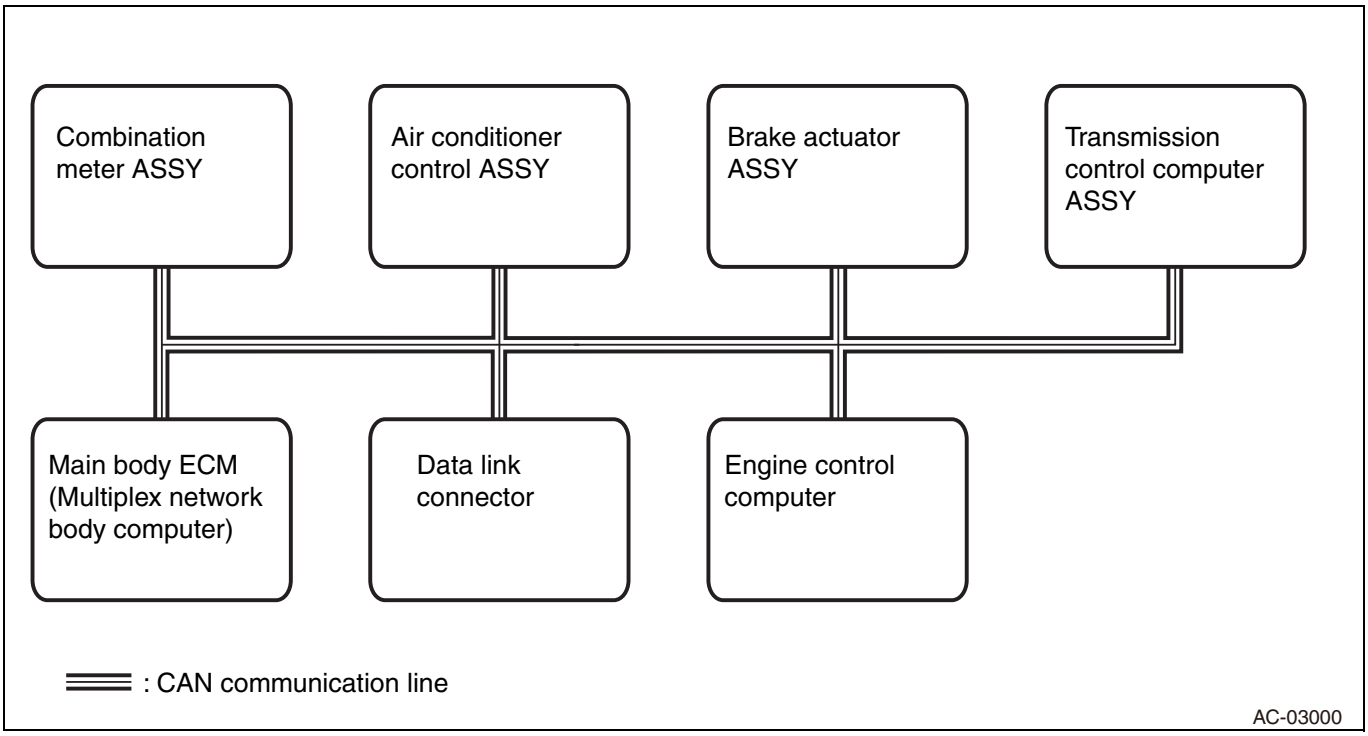

2. Diagnosis function
   (1) Function of diagnosis tool SSM4
   (a)For the heater & air conditioner system, items in the table below can be checked by connecting diagnosis tool SSM4.

Check details	Contents
Diagnostic codes	Diagnostic code can be read or erased.
[Current Data Display & Save]	ECM data can be checked, recorded or reproduced.
System Operation Check Mode	Actuator can be operated at any time.

How to troubleshoot

1	Bring in the car

Next

AC

2	Interview and phenomenon check

(1) Interview and phenomenon check (Refer to AC - 21)

Next

3	Basic inspection

(1) Measure the battery voltage.
Voltage: 10 to 16 V
(2) According to the parts arrangement drawing and/or circuit figure, check the blown fuse, broken wire harness, short circuit, and/or improper connection that can be inspected visually.

Next

4	Inspection of CAN communication system

(1) Check CAN communication system. (Refer to NW - 30)
Result

Result	Go to
Functioning properly	A
Not functioning properly	B

B → CAN communication system (To NW - 30)

A

5	Checking of the diagnostic code by SSM4

(1) Checking of the diagnostic codes (Refer to AC - 21)
(a) Record the diagnostic codes.
(2) Clear diagnostic code
(3) Do a DTC check again.
(a) Based on the recorded diagnostic codes, reproduce the trouble phenomenon, and check if the diagnostic codes are output again.
NOTE:
When a diagnostic code is output, refer to “List of diagnostic codes” (AC - 15).

Result

Result	Go to
No code, can check and reproduce phenomenon	A
Code is output	B
No code, can't check and reproduce phenomenon	C

B → Go to Step 8.

C → Go to "Malfunction simulation (IN - 32)".

A

AC

6	Symptom table

(1) Symptom table (Refer to AC - 16)

Result

Result	Go to
Not applicable to the symptom table.	A
Applicable to the symptom table.	B

B → Go to Step 8.

A

7	Perform troubleshooting with the method below based on malfunctions.

(1) Data monitor / active test (Refer to AC - 28)
  (a) [Data monitor] (SSM4)
  (b) [Active Test] (SSM4)
(2) ECM terminal arrangement (Refer to AC - 25)
(3) After inspection of the wire harness and connector, perform the diagnosis check again. (Refer to AC - 21)

Next

8	Adjustment, repair, or replacement

Next

AC

9	Confirmation test

Next

Complete

Check list for interview

Heater & Air Conditioner System Diagnosis Checklist for Interview

Year/date of vehicle bring-in: Year Month Date

Name		Registration No.	First registration: Year Month Date
		Vehicle model	Frame No.
Front	Engineer	Engine type	Odometer reading

Customer specified content

Date when trouble occurred (from when)	Year Month Date Time
Frequency of occurrence	☐ Continuous ☐ Sometimes (times/day, times/month)
Condition of trouble occurrence	

Weather	☐ Fine ☐ Cloudy ☐ Rainy ☐ Snowy ☐ Other ( )	Temperature	Approx. ( ) °C(°F)
Road	Inner city Suburbs Highway Others ( )	☐ Paved road ☐ Unpaved road	

DTC check	1st output code	
	2nd output code	

Trouble symptom	Airflow control failure	☐ Blower motor does not rotate. ☐ Blower motor does not change speeds. (always fast, always mid-speed, always slow)
	Temperature control failure	☐ Compartment temperature does not lower. ☐ Compartment temperature does not rise. ☐ Slow response
	Inlet opening control failure	☐ FRESH/RECIRC does not change. (always RECIRC, always FRESH)
	Vent control failure	☐ Unable to switch vents. ☐ Cannot be entered into desired mode.
	Others	

AC-03141

AC

Checking / clearing diagnostic codes

1. Checking diagnostic codes (reading with SSM4)
   (1) With IG OFF, connect SSM4 to DLC3.

(2) Turn the ignition switch to ON.
(3) According to the screen of SSM4, select [Each System] →[Air Conditioner] →[DTC].
(4) Check the diagnostic codes.

2. Clearing diagnostic code records (Cleared by the SSM4)
(1) With IG OFF, connect SSM4 to DLC3.
(2) Turn the ignition switch to ON.
(3) According to the screen of SSM4, select [Each System] →[Air Conditioner] →[Clear Memory].
(4) Select [Deletion] on the screen to clear the data.

customize function

1. Heater & air conditioner system customizing
(1) Customization using the SSM4
(a)Connect the SSM4 to the DLC3.
(b)Turn the ignition switch to ON.
(c)According to the screen of SSM4, select [Each System] →[Air Conditioner] →[Customize] for customizing.

Display name	Initial setting value	Contents	Setting	Control ECM
[Intake port auto mode]	AUTO	Sets control function which automatically allows Control ASSY to decide the inlet opening when the auto mode is started or allows user to select.	AUTO/User Select	Air conditioner control ASSY
[Compressor auto mode]	AUTO	Sets control function which automatically allows Control Assy to decide the A/C compressor operation when the auto mode is started or allows user to select.	AUTO/User Select	Air conditioner control ASSY
[Compressor Intake port (PSW, lock) linkage]	With interlock	Sets control function which changes the inlet opening to FRESH when the pressure SW detects a problem or allows user to select.	With interlock/User select	Air conditioner control ASSY
[Foot/DEF Automatic Fan Speed increase Function]	Allows increase	Sets control function which automatically increases the air flow when DEF mode is selected by the User or allows user to select.	Allows increase/User Select	Air conditioner control ASSY
[FOOT/DEF auto mode]	AUTO	Sets control function which selects FOOT/DEF outlet opening when the auto mode is started or user selects.	AUTO/MANUAL	Air conditioner control ASSY
[Setting temperature shift]	Display and actual setting are the same	Sets control function to allow temperature display to vary from the actual setting.	Variance of-3/-2/-1/0/1/2/3 is adjustable	Air conditioner control ASSY

Circuit figure

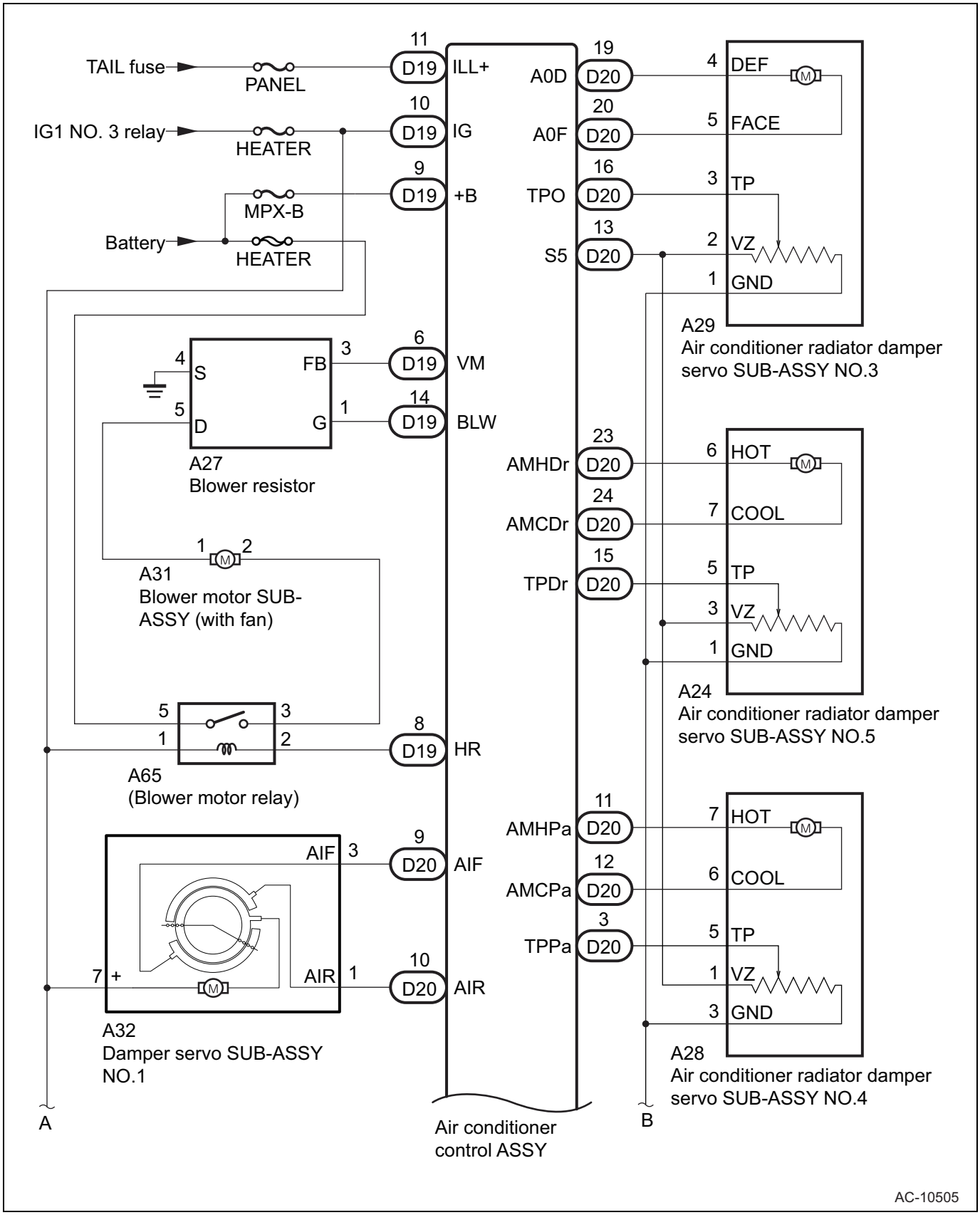

AC

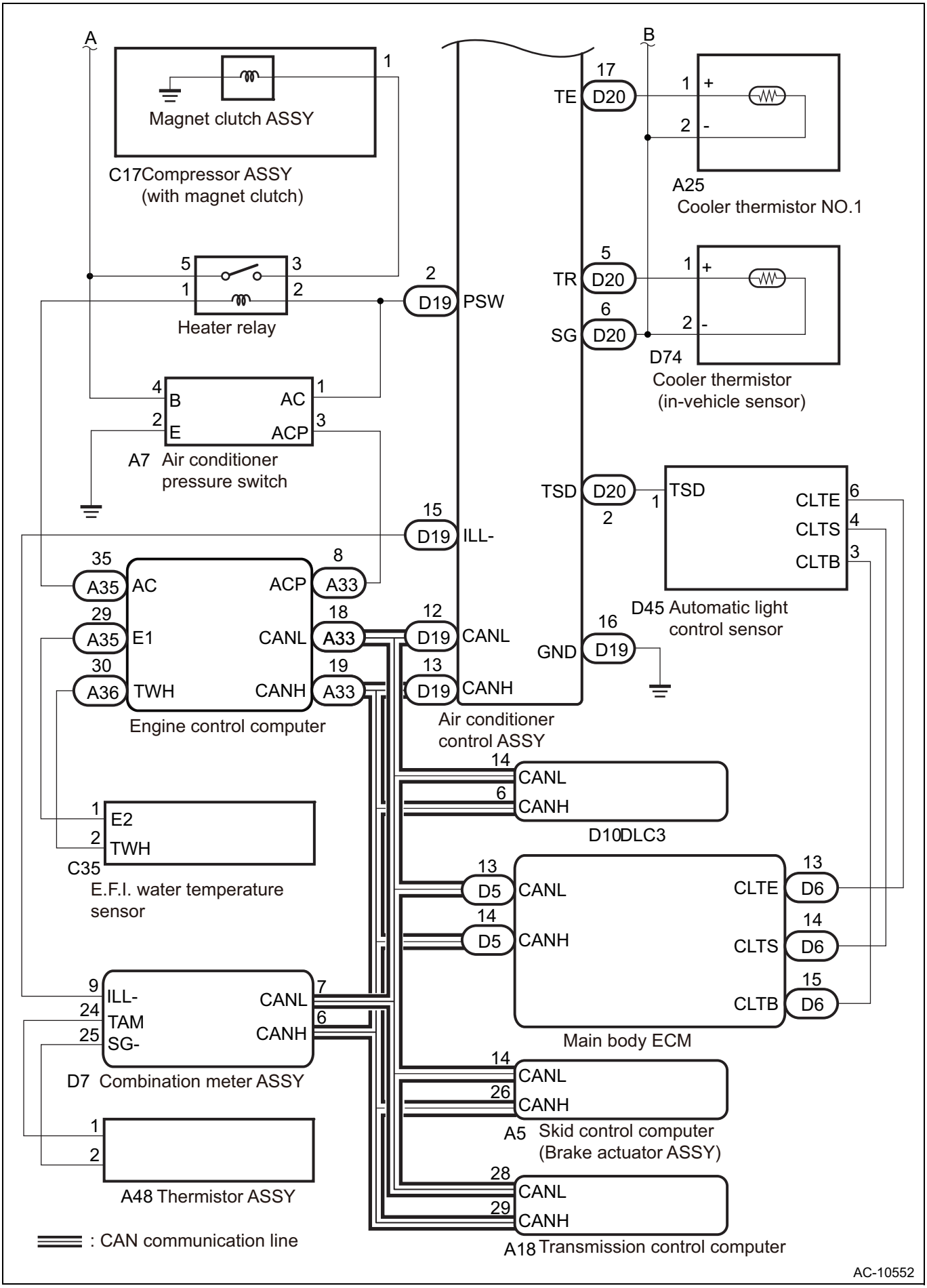
A
B
Magnet clutch ASSY
C17Compressor ASSY
(with magnet clutch)
Heater relay
A7 Air conditioner
pressure switch
Engine control computer
Air conditioner
control ASSY
A25
Cooler thermistor NO.1
D74
Cooler thermistor
(in-vehicle sensor)
D45 Automatic light
control sensor
D10DLC3
C35
E.F.I. water temperature
sensor
Main body ECM
D7 Combination meter ASSY
A48 Thermistor ASSY
A5 Skid control computer
(Brake actuator ASSY)
A18 Transmission control computer
: CAN communication line
AC-10552

ECM terminal arrangement

1. Air conditioner control ASSY

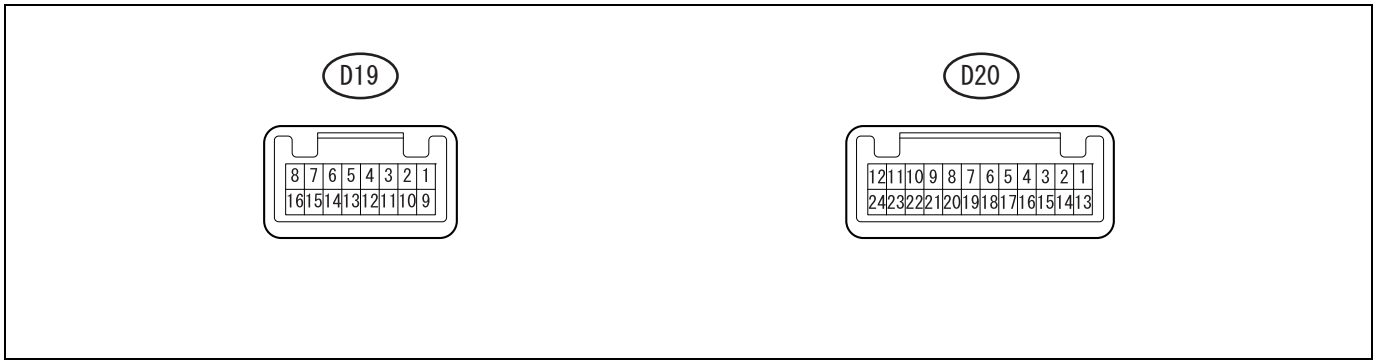

Standard value

Connector D19

Terminal No. (Terminal symbol)	Input/ Output	Item	Measuring conditions	Standard value
D19-1 (ACC)←→D19-16 (GND)	Input	Voltage	IG ACC	10 to 16 V
D19-2 (PSW)←→D19-6 (SG)	Input	Wave-form	When refrigerant pressure is normal	10 to 16 V
			When refrigerant pressure is abnormal	Less than 1 V
D19-6 (SG) ←→Chassis ground	-	Resis-tance	Always	Less than 1 Ω
D19-8 (HR)←→D19-16 (GND)	Input	Voltage	IG ON Blower switch OFF →LO	Less than 1 V →10 to 16 V
D19-9 (+B)←→D19-16 (GND)	Input	Voltage	Always	10 to 16 V
D19-10 (IG)←→D19-16 (GND)	Input	Voltage	IG ON	10 to 16 V
D19-11 (ILL+)←→D19-16 (GND)	Input	Voltage	Night illumination ON	10 to 16 V
			Night illumination OFF	Less than 1 V
D19-12 (CANL)←→D19-16 (GND)	Input/ Output	Wave-form	IG ON	Pulse generation
D19-13 (CANH)←→D19-16 (GND)	Input/ Output	Wave-form	IG ON	Pulse generation
D19-14 (BLW)←→D19-16 (GND)	Output	Wave-form	IG ON Blower switch LO	Pulse generation (waveform 1)
D19-15 (ILL-)←→D19-16 (GND)	Input	-	IG ON Rheostat	10 to 16 V
D19-16 (GND) ←→Chassis ground	-	Resis-tance	Always	Less than 1 Ω

Connector D20

Terminal No. (Terminal symbol)	Input/ Output	Item	Measuring conditions	Standard value
D20-2 (TSD) ←→Chassis ground	Input	Voltage	IG ON Put sunlight or light to the sunload sensor.	0.8 to 4.3 V (The voltage varies depending on the light strength.)
D20-29 (S5)←→16 (GND)	Output	Voltage	IG ON	4.75 V to 5.25 V

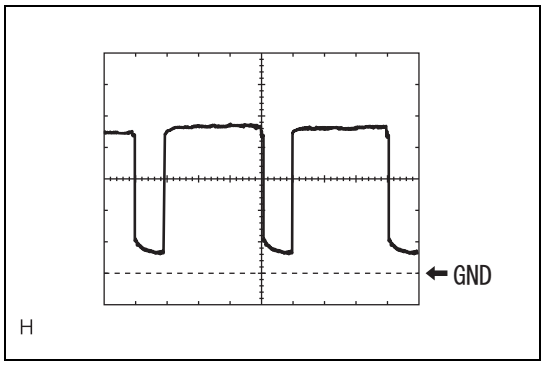

(1) Waveform 1

Item	Contents
Measuring ter-minal	D19-14 (BLW) - D19-16 (GND)
Equipment set-ting	1 V/DIV, 500 μs/DIV
Measuring con-ditions	IG ON, Blower switch: LO, A/C switch: ON

NOTE:

As the blower level is high (increase of air flow), the duty ratio is changed.

AC

2. Combination meter ASSY

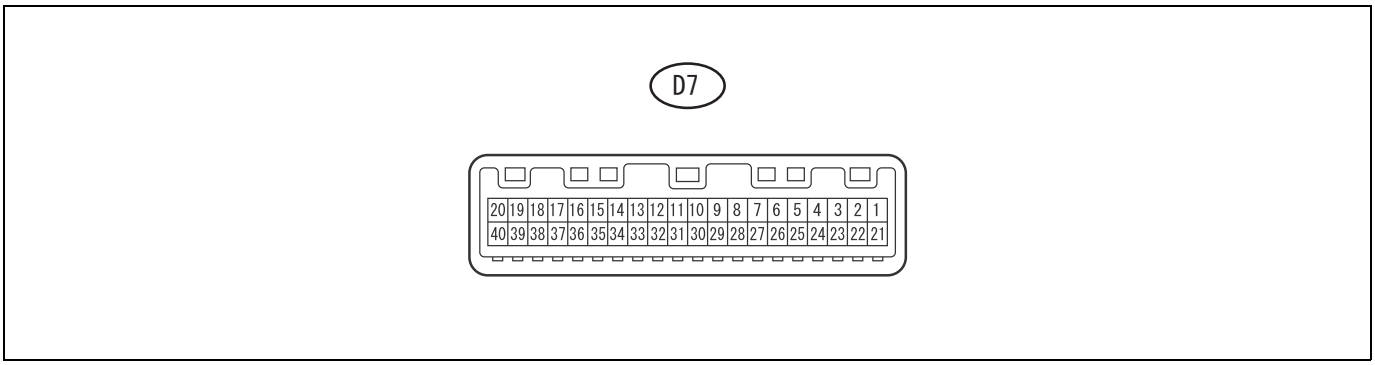

Standard value

Connector D7

Terminal No. (Terminal symbol)	Input/ Output	Item	Measuring conditions	Standard value
D7-24 (TAM) ←→D7-25 (SG-)	Input	Voltage	IG ON External temperature 25°C (77°F)	1.4 to 1.6V
			IG ON External temperature 50°C (122°F)	0.7 to 0.9V
D7-6 (CANH) ←→Chassis ground	Input/ Output	Wave-form	IG ON	Pulse generation
D7-7 (CANL) ←→Chassis ground	Input/ Output	Wave-form	IG ON	Pulse generation

AC

3. Instrument panel junction block ASSY, main body ECM (Network gateway computer)

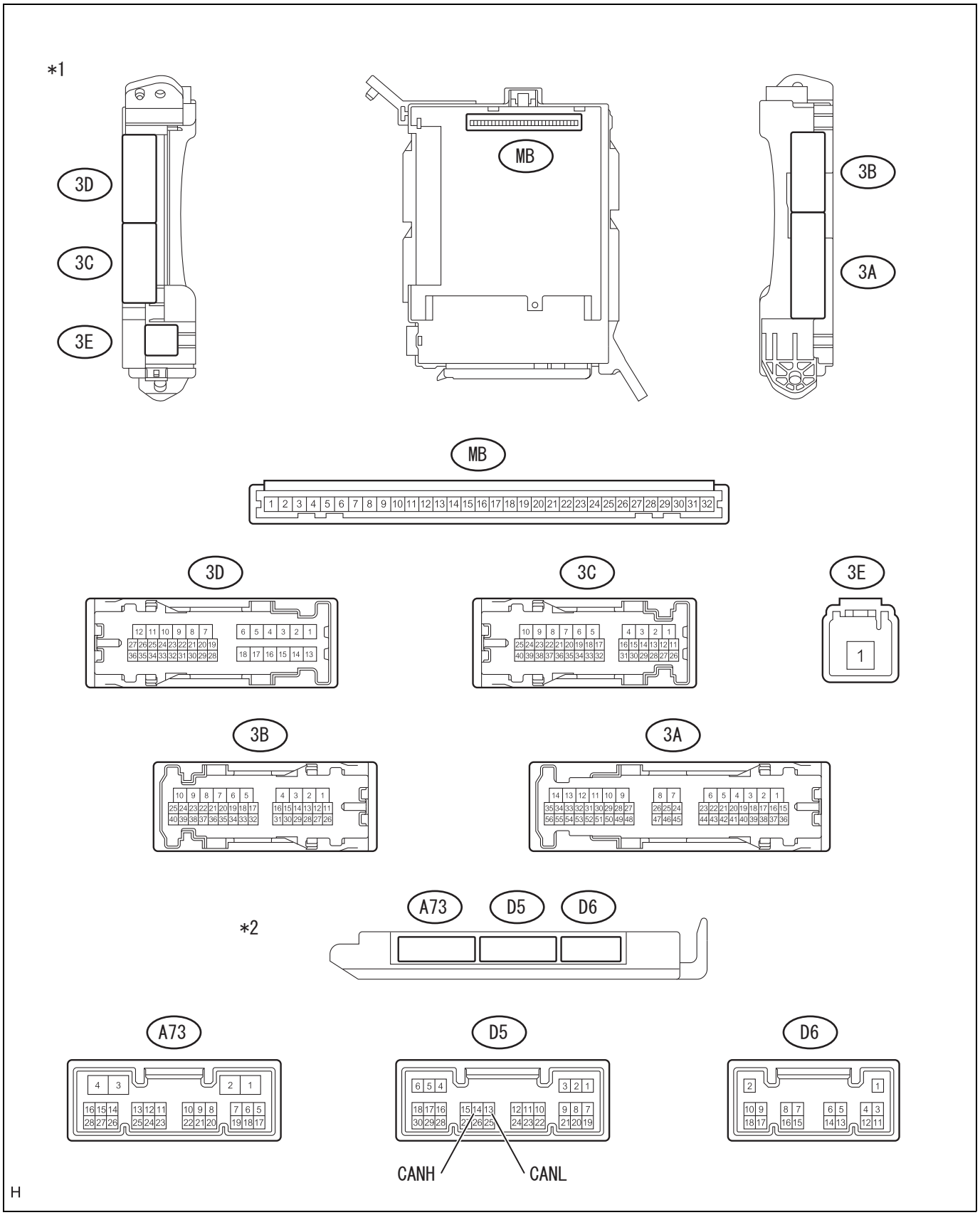

Captions in illustration

*1	Instrument panel junction block ASSY	*2	Main body ECM (Network gateway computer)

(1) Inspection of instrument panel junction block ASSY and main body ECM (network gateway computer)
(a)Remove the main body ECM (network gateway computer) from the instrument panel junction block ASSY.

(b)Check the resistance and voltage between the instrument panel junction block ASSY connector terminals.

Standard value

Connector MB

Terminal No. (Terminal symbol)	Input/ Output	Item	Measuring conditions	Standard value
MB8 ←→Chassis ground	Input	Voltage	IG ON	11 to 14 V
MB9 ←→Chassis ground	Input	Voltage	IG ACC	11 to 14 V
MB11 ←→Chassis ground	-	Resis-tance	Always	Less than 1 Ω

NOTE:

If it is out of the standard value, it can be judged as malfunction of the vehicle.

4. Engine control computer

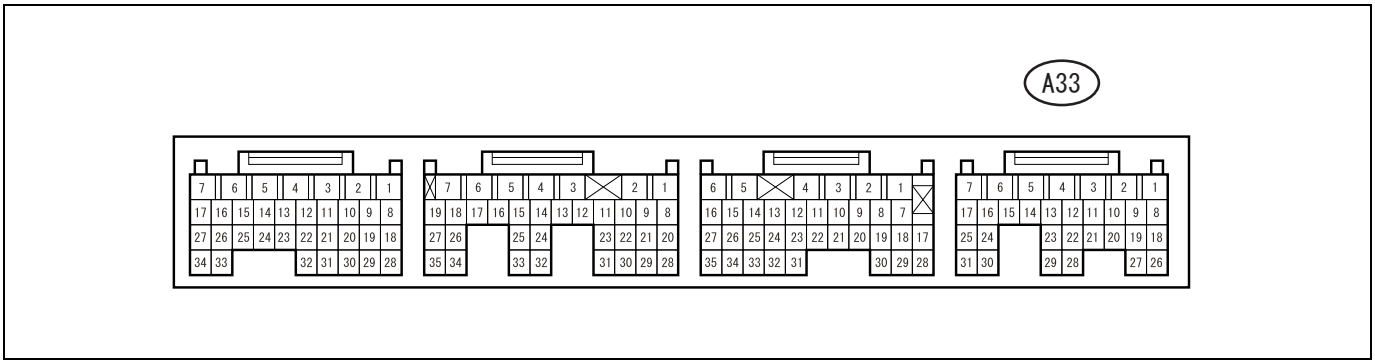

Standard value

Connector A33

Terminal No. (Terminal symbol)	Input/ Output	Item	Measuring conditions	Standard value
A33-8 (ACP) ←→Chassis ground	Input	Voltage	When refrigerant pressure is normal	0.63 to 4.73V
A33-18 (CANL) ←→Chassis ground	Input/ Output	Wave-form	IG ON	Pulse generation
A33-19 (CANH) ←→Chassis ground	Input/ Output	Wave-form	IG ON	Pulse generation

AC

Data monitor / active test

1. ECM data monitor (SSM4)

(1) On the SSM4, navigate to the [Data monitor] display, and check the computer data.

SSM4 screen: [Each System] →[Air Conditioner] →[Data monitor]

Item name	Description/display range	Normal value	Remarks
[In-vehicle Sensor Tempera-ture]	Vehicle compartment temperature is displayed. Display range: -72.47 to 193.82°C {-98.4 to 380.9°F}	Default value is displayed for open or short-circuit. [SSM4] (25°C {77°F}) is displayed.	Cooler thermistor (in-vehicle sensor) system
[Quantity of Sunload]	Light strength at the sunload sensor is displayed. Display range: 0 to 4448W/m^2	In the range from 0 to 4448, it is increased for brighter light (the value according to sunload is displayed). • Default value is displayed for open circuit, no sunload or short-circuit: (0) is displayed.	Automatic light control sensor system
[A/C Pressure Switch]	Refrigerant pressure is displayed. Display range: Normal - Abnormal	Refrigerant pressure status is displayed.	Compressor ASSY operation Refrigerant level Refrigerant leak Pressure switch system
[Heater Water Temperature]	Water temperature is displayed. Display range: -40.00 to 215.00°C {-40.00 to 419.00°F}	In the range from -40.00 to 215.00°C {-40.00 to 419.00°F}, the engine coolant temperature is displayed.	Engine is warmed. E.F.I. water temperature (coolant temperature sensor) system CAN communication system
[Heater Control Panel Setting Value (Driver's)]	Driver's seat side setting temperature is displayed. Display range: 15.00 to 90.00°C {59.00 to 194.00°F}	The same value as the setting temperature display is displayed.	When the driver's seat side setting temperature dial is operated Control panel system

Item name	Description/display range	Normal value	Remarks
[Heater Control Panel Setting Value (Passenger's)]	Passenger's seat side setting temperature is displayed. Display range: 15.00 to 90.00°C {59.00 to 194.00°F}	The same value as the setting temperature display is displayed.	When the passenger's seat side setting temperature dial is operated Control panel system
[Blower outlet request temperature (Driver's)]	Target temperature of the driver's seat side outlet opening is displayed. Display range: -327.68 to 327.67°C {-557.82 to 621.80°F}	• In MAX COLD: -327.68°C {-557.82°F} is displayed. • In MAX HOT: 327.67°C {621.80°F} is displayed.	-
[Blower outlet request temperature (Passenger's)]	Target temperature of the passenger's seat side outlet opening is displayed. Display range: -327.68 to 327.67°C {-557.82 to 621.80°F}	• In MAX COLD: -327.68°C {-557.82°F} is displayed. • In MAX HOT: 327.67°C {621.80°F} is displayed.	-
[Air mix door actuator position (driver's side)]	Actual position information of the driver's seat side air mix damper is displayed. Display range: -32.68 to 133.33%	The target opening is followed.	Air mix damper servo system
[Air mix door actuator position (passenger's side)]	Actual position information of the passenger's seat side air mix damper is displayed. Display range: -32.68 to 133.33%	The target opening is followed.	Air mix damper servo system
[Mode Door Actuator Position]	Actual position information of the mode damper is displayed. Display range: -32.68 to 133.33%	The target opening is followed.	Mode damper servo system
[Fresh/Recircle Air Door Actuator Position]	Actual position information of the FRESH/RECIRC damper is displayed. Display range: 0 to 100 %	The target FRESH/RECIRC position is followed. • In REC: 0% • In FRS: 100%	Damper servo (FRESH/RECIRC) system
[Target air mix door actuator position (driver's side)]	Actual position information of the driver's seat side air mix damper is displayed. Display range: -32.68 to 133.33%	• In MAX COOL: -10 is displayed. • In MAX HOT: 100 is displayed.	Air mix damper servo system
[Target air mix door actuator position (passenger's side)]	Actual position information of the passenger's seat side air mix damper is displayed. Display range: -32.68 to 133.33%	• In MAX COOL: 0 is displayed. • In MAX HOT: 110 is displayed.	Air mix damper servo system
[Mode Door Actuator Position Target]	Actual position information of the mode damper is displayed. Display range: -32.68 to 133.33%	• In FACE: -16.7 • In B/L: 10 • In FOOT: 70 • In FOOT/DEF: 90 • In DEF: 116.7	In operation of the outlet opening switch Mode damper servo system
[Fresh/Recircle Air Door Actuator Position Target]	Position information of the FRESH/RECIRC damper is displayed. Display range: REC - FRS	• In REC: REC • In FRS: FRS	In operation of the FRESH/RECIRC switch Damper servo (FRESH/RECIRC) system
[Blower Fan Level]	The revolution level of the blower fan motor is displayed. Display range: 0 to 31	When the revolution is increased, the value goes up in the range from 0 to 31. • In Min: (0) is displayed. • In Max: (31) is displayed.	Blower fan system
[Ambient Air Temperature]	Ambient air temperature is displayed. Display range: -40.00 to 80.00°C {-40.00 to 176.00°F}	Value immediately before or default value (15.2°C {59.4°F}) is displayed when there is open or short-circuit.	Cooler thermistor (ambient sensor) system
[Compressor operation status]	Compressor ASSY Display range: OFF - ON	• In compressor OFF: OFF • In compressor ON: ON	Compressor ASSY operation
[Blower Fan Operating Condition]	Operation mode (manual/auto) of the blower fan is displayed. Display range: Manual - Auto	• In manual: Manual • In Auto: Auto	-
[A/C Operating Condition]	Operation mode (manual/auto) of the compressor is displayed. Display range: Manual - Auto	• In manual: Manual • In Auto: Auto	Engine control computer system
[Fresh/Recircle Air Operating Condition]	Operation mode (manual/auto) of FRESH/RECIRC is displayed. Display range: Manual - Auto	• In manual: Manual • In Auto: Auto	In operation of the FRESH/RECIRC switch Damper servo (FRESH/RECIRC) system

AC

Item name	Description/display range	Normal value	Remarks
[Mode Operating Condition]	Operation mode (manual/auto) of the outlet opening is displayed. Display range: Manual - Auto	• In manual: Manual • In Auto: Auto	Mode damper servo system
[Rear Defogger]	Rear defogger switch status is displayed. Display range: OFF - ON	• In Switch OFF: OFF • In Switch ON: ON	-
[Engine Speed]	Display range: 0 to 32767	In the range from 0 to 32767, the engine speed is displayed.	-
[Vehicle Speed]	Display range: 0.00 to 300.00	In the range from 0.00 to 300.00, the vehicle speed is displayed.	-
[Evaporator Temperature]	Evaporator ambient temperature is displayed. Display range: -82.48 to 153.55°C {-116.46 to 308.39°F}	• In open circuit: (-82.48°C {-116.46°F}) is displayed. • In short-circuit: (153.55°C {308.39°F}) is displayed.	Cooler thermistor NO.1 (after-evaporator sensor) system
[Evaporator Temperature Target]	Cooler thermistor NO.1 (after-evaporator sensor) target temperature is displayed (target value of ECM). Display range: 0.00to 20.00°C {32.00 to 68.00°F}	In the range from 0.00 to 20.00, the target after-evaporator temperature is displayed.	Cooler thermistor NO.1 (after-evaporator sensor) system
[Intake port auto mode]	Set value of initial RECIRC is displayed. Display range: Manual - Auto	• In manual: Manual • In Auto: Auto	Customize setting
[Compressor auto mode]	Set value of compressor Auto is displayed. Display range: Without interlock - With interlock	• In manual: Manual • In Auto: Auto	Customize setting
[Compressor Intake port (PSW, lock) linkage]	Set value of inlet opening (PSW/lock) interlock is displayed. Display range: Without interlock - With interlock	• Without interlock: No interlock • With interlock: Interlock	Customize setting
[Foot/DEF Automatic Fan Speed increase Function]	Set value of air flow increase in DEF is displayed. Display range: Without increase - With increase	• Without increase: No increase • With increase: Increase	Customize setting
[FOOT/DEF auto mode]	Set value of FOOT/DEF interlock is displayed. Display range: Manual - Auto	• In manual: Manual • In Auto: Auto	Customize setting
[Setting temperature shift]	Setting temperature shift value is displayed. Display range: -3 to +3°C	Setting temperature shift is displayed.	Customize setting
[Number of Diagnostic Code(s):]	Display range: 0 to 255	Number of diagnostic codes output is displayed.	-

SSM4 screen: [Each System] →[Engine Control System] →[Data monitor]

Item name	Description/display range	Normal value	Remarks
[A/C Magnetic Clutch Relay]	Air conditioner switch status is displayed. Display: ON - OFF	ON: Air conditioner ON OFF: Air conditioner OFF	The air conditioner signal system may have an error, if any.

2. Active test

(1) Using SSM4, display the [Active Test] screen according to the screen and perform an active test.

SSM4 screen: [Each System] →[Air Conditioner] →[Active Test]

Item name	Drive
[Blower Fan Level Setting]	Blower motor operation Operate in the range from 0 to 31 (Level).
[Air mix door actuator target open (driver's side)]	Operation of driver's seat side air mix damper servo Operate in the range from -10 to 100.00. CAUTION: Operation exceeding this range may result in a malfunction. Perform the system operation check mode within this range.

AC

Item name	Drive
[Air mix door actuator target open (passenger's side)]	Operation of passenger's seat side air mix damper servo Operate in the range from 0 to 110.00. CAUTION: Operation exceeding this range may result in a malfunction. Perform the system operation check mode within this range.
[Mode Door Actuator Opening Angle Target]	Operation of mode damper servo Operate in the range from -32.68 to 133.33.
[In-vehicle Air Temperature setting]	In-vehicle detection temperature settings Operate in the range from -72.47 to 193.82.
[Ambient Air Temperature Setting]	Ambient air detection temperature settings Operate in the range from -40.00 to 80.00.
[Quantity of Sunload Setting]	Sunload quantity detection settings Operate in the range from 0 to 4448.
[Heater Water Temperature Setting]	Heater water detection temperature settings Operate in the range from -40.00 to 215.00.
[AUTO SW setting]	Contact status of AUTO SW ON - OFF
[Rear Defogger Setting]	Contact status of rear defogger SW ON - OFF
[A/C Change Setting]	Contact status of A/C switch ON - OFF
[Fresh/Rec Air Dr Act Trgt Open Angle]	Operation of RECIRC/FRESH damper servo RECIRC - FRESH

SSM4 screen: [Each System] →[Engine Control System] →[Active Test]

Item name	Drive
[A/C Compressor Relay]	Magnet clutch operation ON - OFF

DTC	B1430	Room temperature sensor circuit wire break

DTC	B1431	Room temperature sensor circuit short-circuit

AC

Circuit description

The cooler thermistor (in-vehicle sensor) is installed on the instrument panel. It is used to detect the passenger compartment temperature and to control “AUTO” of the heater & air conditioner. The resistance of the cooler thermistor (in-vehicle sensor) varies along with change of the passenger compartment temperature. When the passenger compartment temperature is low, the resistance is high. In contrast, when the passenger compartment temperature is high, the resistance is small. The air conditioner control ASSY gives voltage output (5 V) to the cooler thermistor (in-vehicle sensor), and reads variation of voltage along with resistance change of the cooler thermistor (in-vehicle sensor).

DTC NO.	Detecting conditions 1.Diagnosis condition 2.Abnormal condition 3.Judgment time for abnormality	Inspection parts
B1430	1. None 2. Open circuit of cooler thermistor (in-vehicle sensor) 3. Judgment for current malfunction: 4.0 seconds or more continuously Judgment for past malfunction (SSM4): 4.0 seconds or more continuously	• Cooler thermistor (in-vehicle sensor) • Wire harness and connector (air conditioner control ASSY - cooler thermistor (in-vehicle sensor)) • Air conditioner control ASSY

DTC NO.	Detecting conditions 1.Diagnosis condition 2.Abnormal condition 3.Judgment time for abnormality	Inspection parts
B1431	1. None 2. Short circuit (short-circuit) in cooler thermistor (in-vehicle sensor) circuit 3. Judgment for current malfunction: 4.0 seconds or more continuously Judgment for past malfunction (SSM4): 4.0 seconds or more continuously	• Cooler thermistor (in-vehicle sensor) • Wire harness and connector (air conditioner control ASSY - cooler thermistor (in-vehicle sensor)) • Air conditioner control ASSY

Circuit figure

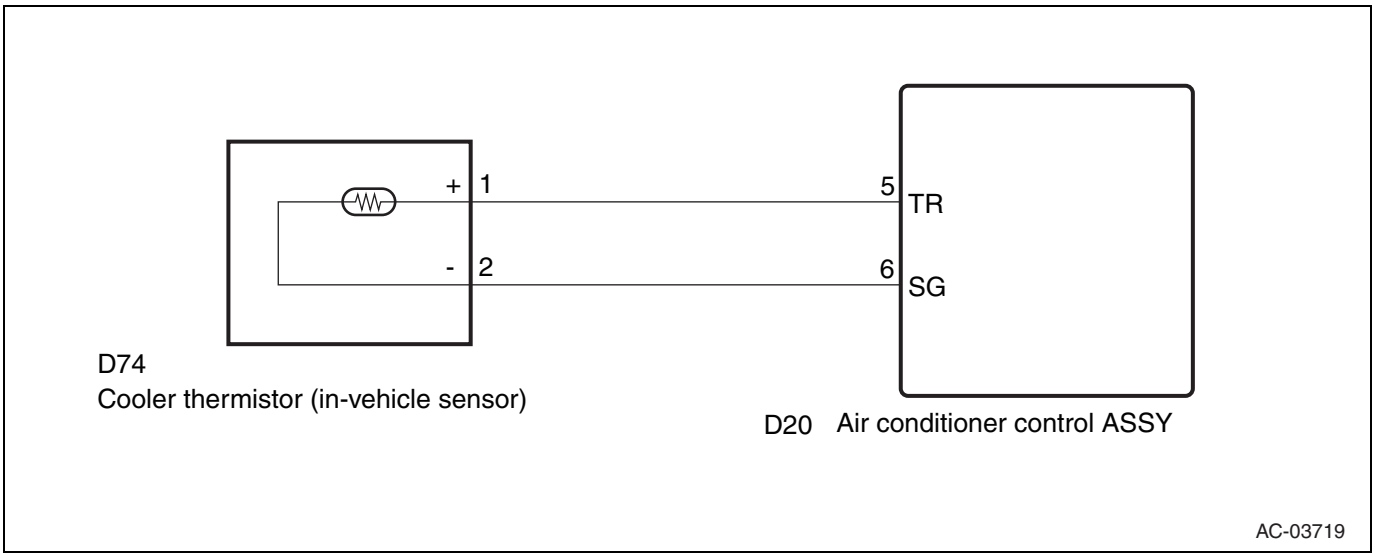

AC

Inspection steps

1	Reading of SSM4 data (in-vehicle sensor)

(1) Connect the SSM4 to the DLC3.
(2) Turn the ignition switch to ON.
(3) Using SSM4, read [Data monitor] - [In-vehicle Sensor Temperature] according to the screen.

Criteria

SSM4 screen: [Each System] →[Air Conditioner] →[Data monitor]

Item name [Item symbol]	Description/display range	Normal value	Remarks
[In-vehicle Sensor Temperature]	Vehicle compartment temperature is displayed. Display range: -72.47 to 193.82°C {-98.4 to 380.9°F}	Vehicle compartment temperature is displayed. • In open/short circuit: Default value (25°C {77°F}) is displayed.	Cooler thermistor (in-vehicle sensor) system

Result

Result	Go to
The same value as the ambient temperature of the cooler thermistor (in-vehicle sensor) is displayed (inspection with the list of diagnostic codes).	A

Result	Go to
The same value as the ambient temperature of the cooler thermistor (in-vehicle sensor) is displayed (inspection with the list of symptoms).	B
The same value as the ambient temperature of the cooler thermistor (in-vehicle sensor) is not displayed.	C

B → Go to related circuit inspection listed in symptom table (Refer to AC - 16).

C → Go to Step 3.

A

2 Checking diagnostic codes

(1) Clear the diagnostic code using the SSM4. (Refer to AC - 21)
(2) Using SSM4, check the diagnostic code again. (Refer to AC - 21)
Criteria: No DTC output

NG → Replacement of air conditioner control ASSY (Refer to AC - 158)

OK

Complete

3 Unit inspection of cooler thermistor (in-vehicle sensor)

(1) Remove the cooler thermistor (in-vehicle sensor). (Refer to AC - 158)
(2) Perform the inspection of individual cooler thermistor (in-vehicle sensor). (Refer to AC - 159)

NG → Replacement of cooler thermistor (in-vehicle sensor) (Refer to AC - 158)

OK

4 Inspection of wire harness and connector (cooler thermistor (in-vehicle sensor) - air conditioner control ASSY)

NOTE:
For inspection procedures and precautions, refer to IN - 36.
(1) Disconnect connector D20 of the air conditioner control ASSY.
(2) Measure the resistance between the terminals.
Resistance (open circuit check)

Inspection terminals	Inspection conditions	Standard value
D74-2(-) - D20-6(SG)	Always	Less than 1 Ω
D74-1(+) - D20-5(TR)	Always	Less than 1 Ω

AC

Resistance (short circuit check)

Inspection terminals	Inspection conditions	Standard value
D74-2 (-) - Chassis ground	Always	10 kΩ or more
D74-1 (+) - Chassis ground	Always	10 kΩ or more

NG → Repair or replacement of wiring harness or connector

OK

Replacement of air conditioner control ASSY (Refer to AC - 158)

DTC	B1432	Ambient temperature sensor circuit wire break

DTC	B1433	Ambient temperature sensor circuit short-circuit

Circuit description

The thermistor ASSY is installed at the front of the condenser. It is used to detect the ambient air temperature, to display the ambient air temperature on the multi display of the combination meter ASSY, and to control “AUTO” of the heater & air conditioner. The resistance of the thermistor ASSY varies along with change of the ambient air temperature. When the ambient air temperature is low, the resistance is high. In contrast, when the ambient air temperature is high, the resistance is small. The combination meter ASSY gives voltage output (5 V) to the thermistor ASSY, and reads variation of voltage along with resistance change of the thermistor ASSY.

DTC NO.	Detecting conditions 1.Diagnosis condition 2.Abnormal condition 3.Judgment time for abnormality	Inspection parts
B1432	1. None 2. Open circuit of thermistor ASSY 3. Judgment for current malfunction: 1.0 minute or more continuously Judgment for past malfunction (SSM4): 1.0 minute or more continuously	• Thermistor ASSY • Wire harness and connector (air conditioner control ASSY - thermistor ASSY) • CAN communication system • Air conditioner control ASSY
B1433	1. None 2. Short circuit in thermistor ASSY circuit 3. Judgment for current malfunction: 1.0 minute or more continuously Judgment for past malfunction (SSM4): 1.0 minute or more continuously	• Thermistor ASSY • Wire harness and connector (air conditioner control ASSY - thermistor ASSY) • CAN communication system • Air conditioner control ASSY

AC

Circuit figure

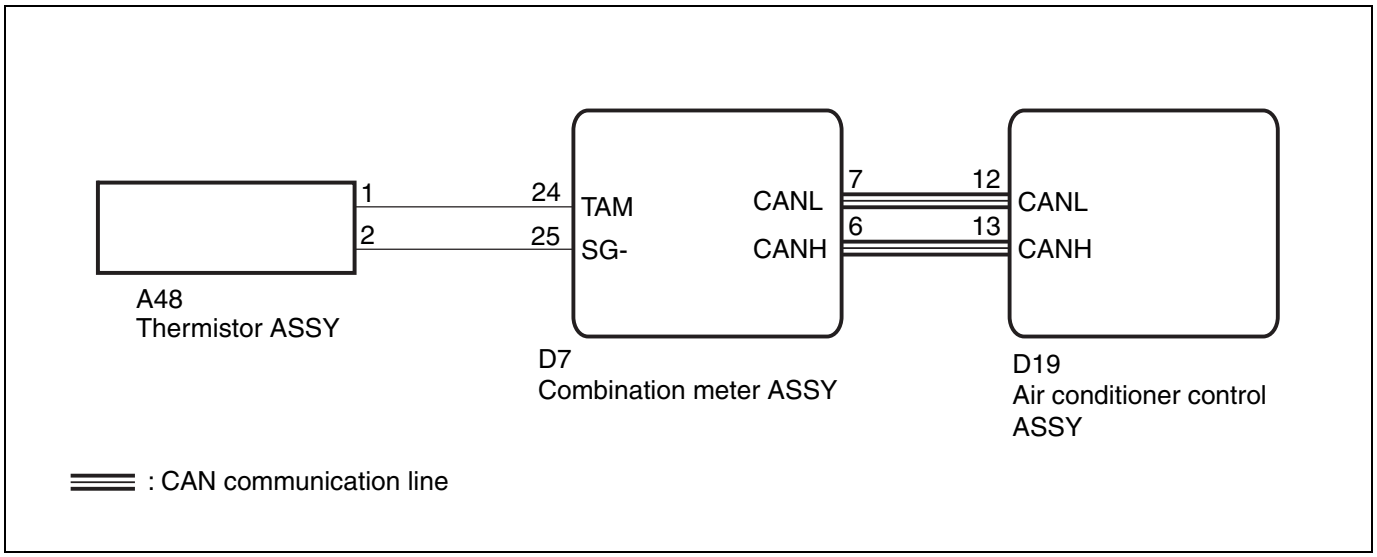

Inspection steps

CAUTION:

- The heater & air conditioner system uses the CAN communication system. First, perform a “Communication function inspection”, following “How to troubleshoot” and after checking for any malfunction in the communication system, you can proceed with troubleshooting.
- This diagnostic code may be affected by abnormality of the combination meter ASSY. Before inspection, check the diagnostic code of “Meter & gauge system” and make sure that it is normal.

1	Reading of SSM4 data (ambient sensor)

(1) Using SSM4, read [Data monitor] - [Ambient Air Temperature] according to the screen.

Criteria

SSM4 screen: [Each System] →[Air Conditioner] →[Data monitor]

Item name [Item symbol]	Description of item/display item	Normal value	Remarks
[Ambient Air Temperature]	Ambient air temperature is displayed. Display range: -40.00 to 80.00°C {-40 to 176°F}	Value immediately before or default value (15.2°C {59.4°F}) is displayed when there is open or short-circuit.	Thermistor ASSY system

Result

Result	Go to
The same value as the ambient temperature of the thermistor ASSY is displayed (inspection with the list of diagnostic codes).	A
The same value as the ambient temperature of the thermistor ASSY is displayed (inspection with the list of symptoms).	B
The same value as the ambient temperature of the thermistor ASSY is not displayed.	C

B	Go to related circuit inspection listed in symptom table (Refer to AC - 16).
C	Go to Step 3.

A

2	Checking diagnostic codes

(1) Clear the diagnostic code using the SSM4. (Refer to AC - 21)
(2) Using SSM4, check the diagnostic code again. (Refer to AC - 21)
Criteria: No DTC output

NG → Replacement of air conditioner control ASSY (Refer to AC - 170)

OK

Complete

3	Unit inspection of thermistor ASSY

(1) Remove the thermistor ASSY.
(2) Inspect the individual thermistor ASSY. (Refer to AC - 160)

NG → Replacement of thermistor ASSY (Refer to AC - 160)

OK

4	Inspection of wire harness and connector (thermistor ASSY - combination meter ASSY)

NOTE:
For inspection procedures and precautions, refer to IN - 36.
(1) Disconnect connector D7 of the combination meter ASSY.
(2) Measure the resistance between the terminals. (For terminal arrangement, refer to ME - 63.)

Resistance (open circuit check)

Inspection terminals	Inspection conditions	Standard value
A48-1 - D7-24(TAM)	Always	Less than 1 Ω
A48-2 - D7-25(SG-)	Always	Less than 1 Ω

Resistance (short circuit check)

Inspection terminals	Inspection conditions	Standard value
A48-1 - Chassis ground	Always	10 kΩ or more
A48-2 - Chassis ground	Always	10 kΩ or more

NG → Repair or replacement of wiring harness or connector

OK

Replacement of air conditioner control ASSY (Refer to AC - 170)

AC

DTC	B1434	Evaporator sensor circuit wire break

DTC	B1435	Evaporator sensor circuit short-circuit

Circuit description

Cooler thermistor NO.1 is installed at the evaporator of the air conditioner unit. It is used to detect the cool air temperature through the evaporator and to control the air conditioner. The resistance of cooler thermistor NO.1 varies along with change of the cool air temperature through the evaporator. When the cool air temperature is low, the resistance is high. In contrast, when the cool air temperature is high, the resistance is small. The air conditioner control ASSY gives voltage output (5 V) to cooler thermistor NO.1, and reads variation of voltage along with resistance change of cooler thermistor NO.1.

DTC NO.	Detecting conditions 1.Diagnosis condition 2.Abnormal condition 3.Judgment time for abnormality	Inspection parts
B1434	1. None 2. Open circuit of cooler thermistor NO.1 3. Judgment for current malfunction: 4.0 seconds or more continuously Judgment for past malfunction (SSM4): 4.0 seconds or more continuously	• Cooler thermistor NO.1 • Wire harness and connector (air conditioner control ASSY - cooler thermistor NO.1) • Air conditioner control ASSY
B1435	1. None 2. Short circuit in cooler thermistor NO.1 circuit 3. Judgment for current malfunction: 4.0 seconds or more continuously Judgment for past malfunction (SSM4): 4.0 seconds or more continuously	• Cooler thermistor NO.1 • Wire harness and connector (air conditioner control ASSY - cooler thermistor NO.1) • Air conditioner control ASSY

Circuit figure

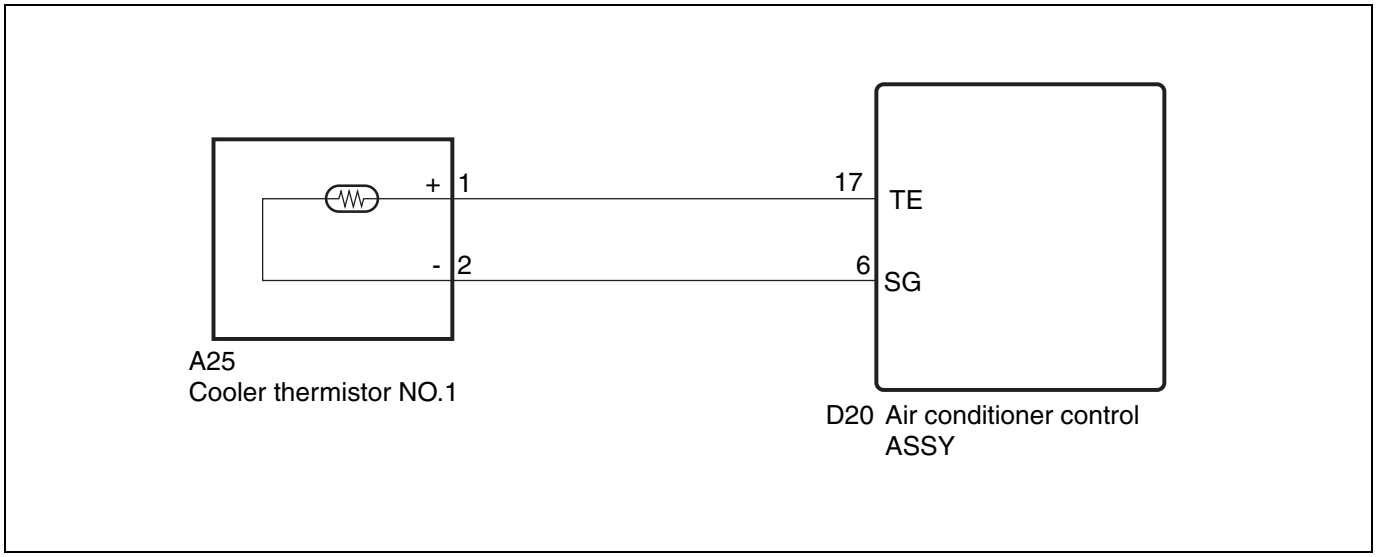

AC

Inspection steps

1	Reading of SSM4 data

(1) Connect the SSM4 to the DLC3.
(2) Turn the ignition switch to ON.
(3) Using SSM4, read [Data monitor] - [Evaporator Temperature] according to the screen.

Criteria

SSM4 screen: [Each System] →[Air Conditioner] →[Data monitor]

Item name [Item symbol]	Inspection conditions	Normal value	Remarks
[Evaporator Temperature]	Evaporator ambient temperature is displayed. Display range: -82.48 to 153.55°C {-116.46 to 308.39°F}	• In open circuit: (-82.48°C {-116.46°F}) is displayed. • In short-circuit: (153.55°C {308.39°F}) is displayed.	Cooler thermistor NO.1 system

Result

Result	Go to
The same value as the ambient temperature of cooler thermistor NO.1 is displayed (inspection with the list of diagnostic codes).	A
The same value as the ambient temperature of cooler thermistor NO.1 is displayed (inspection with the list of symptoms).	B
The same value as the ambient temperature of cooler thermistor NO.1 is not displayed.	C

B → Go to related circuit inspection listed in symptom table (Refer to AC - 16).

C → Go to Step 3.

A

2 Checking diagnostic codes

(1) Clear the diagnostic code using the SSM4. (Refer to AC - 21)
(2) Using SSM4, check the diagnostic code again. (Refer to AC - 21)
Criteria: No DTC output

NG → Replacement of air conditioner control ASSY (Refer to AC - 170)

OK

Complete

3 Unit inspection of cooler thermistor NO.1

(1) Disconnect connector A25 of cooler thermistor NO.1 (after-evaporator sensor) from the air conditioner control ASSY.
(2) Perform the inspection of individual cooler thermistor NO.1 (after-evaporator sensor). (Refer to AC - 167)

NG → Replacement of cooler thermistor NO.1 (Refer to AC - 165)

OK

4	Inspection of wire harness and connector (cooler thermistor NO.1 - air conditioner control ASSY)

NOTE:
For inspection procedures and precautions, refer to IN - 36.
(1) Disconnect connector D20 of the air conditioner control ASSY.
(2) Measure the resistance between the terminals.
Resistance (open circuit check)

Inspection terminals	Inspection conditions	Standard value
A25-1(+) - D20-17 (TE)	Always	Less than 1 Ω
A25-2(-) - D20-6 (SG)	Always	Less than 1 Ω

Resistance (short circuit check)

Inspection terminals	Inspection conditions	Standard value
A25-1 (+) - Chassis ground	Always	10 kΩ or more
A25-2 (-) - Chassis ground	Always	10 kΩ or more

NG → Repair or replacement of wiring harness or connector

OK

Replacement of air conditioner control ASSY (Refer to AC - 170)

DTC	B1436	Air mix door actuator potentiometer circuit wire break (passenger's seat)

DTC	B1437	Air mix door actuator potentiometer circuit short-circuit (passenger's seat)

DTC	B1441	Air mix door actuator lock (passenger's seat)

Circuit description
The damper position of air conditioner radiator damper servo SUB-ASSY NO.4 is detected by the air conditioner control ASSY. Based on this, the air conditioner control ASSY rotates the motor (forward or backward) to move the air mix damper at the desired position. This adjusts the air flow in the heater core after the evaporator and controls the outlet temperature.

DTC NO.	Detecting conditions 1.Diagnosis condition 2.Abnormal condition 3.Judgment time for abnormality	Inspection parts
B1436	1. When air conditioner radiator damper servo SUB-ASSY NO.4 is operated 2. Open circuit of damper servo circuit 3. Judgment for current malfunction: 0.02 seconds or more continuously Judgment for past malfunction (SSM4): 0.02 seconds or more continuously	• Air conditioner radiator damper servo SUB-ASSY NO.4 • Wire harness and connector (air conditioner control ASSY - air conditioner radiator damper servo SUB-ASSY NO.4) • Air conditioner control ASSY

DTC NO.	Detecting conditions 1.Diagnosis condition 2.Abnormal condition 3.Judgment time for abnormality	Inspection parts
B1437	1. When air conditioner radiator damper servo SUB-ASSY NO.4 is operated 2. Short circuit in damper servo circuit 3. Judgment for current malfunction: 0.02 seconds or more continuously Judgment for past malfunction (SSM4): 0.02 seconds or more continuously	• Air conditioner radiator damper servo SUB-ASSY NO.4 • Wire harness and connector (air conditioner control ASSY - air conditioner radiator damper servo SUB-ASSY NO.4) • Air conditioner control ASSY
B1441	1. When air conditioner radiator damper servo SUB-ASSY NO.4 is operated 2. Although the damper servo drive request signal is output, the position information of the servo is not changed or abnormal 3. Judgment for current malfunction: 16 seconds or more continuously Judgment for past malfunction (SSM4): 16 seconds or more continuously	• Air conditioner radiator damper servo SUB-ASSY NO.4 • Wire harness and connector (air conditioner control ASSY - air conditioner radiator damper servo SUB-ASSY NO.4) • Air conditioner control ASSY

Circuit figure

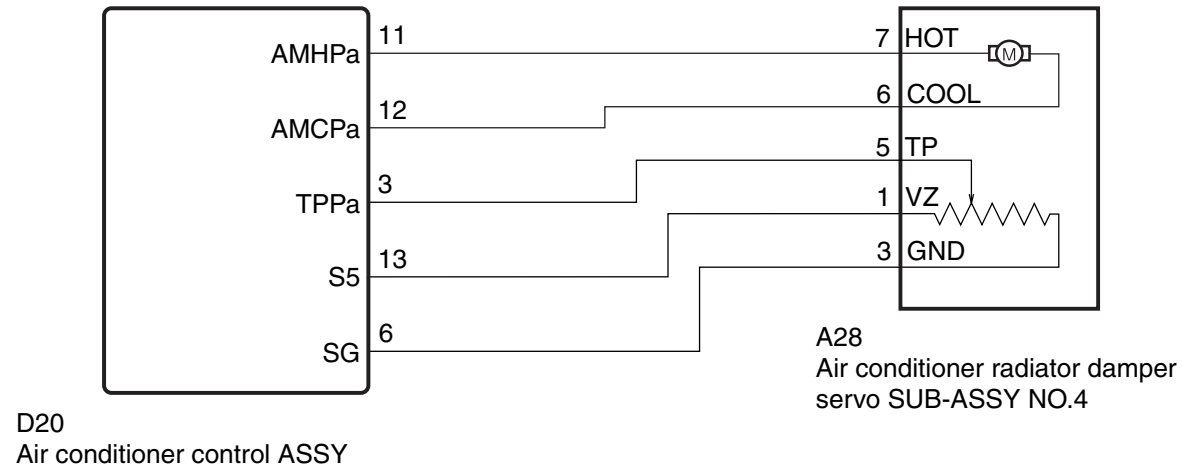

AC

Inspection steps

CAUTION:

This diagnostic code is output for lock of the damper link or damper. Before performing the inspection, make sure that there is no mechanical malfunction.

1	Reading of SSM4 data (passenger's seat air mix target opening, passenger's seat air mix actual opening)

(1) Using the SSM4, follow the screen display and check the [Data monitor].

Criteria: The opening display is normal according to the setting temperature switch operation.

SSM4 screen: [Each System] →[Air Conditioner] →[Data monitor]

Item name [Symbol]	Description/display range	Normal value	Remarks
[Target air mix door actuator position (passenger's side)]	Target position information of the passenger's seat side air mix damper is displayed. Display range: -32.68 to 133.33%	• In MAX COOL: 0% • In MAX HOT: 110%	Air conditioner radiator damper servo SUB-ASSY NO.4 system
[Air mix door actuator position (passenger's side)]	Actual position information of the passenger's seat side air mix damper is displayed. Display range: -32.68 to 133.33%	The target opening is followed.	Air conditioner radiator damper servo SUB-ASSY NO.4 system

NG → Go to Step 3.

OK

2	Checking diagnostic codes

(1) Clear the diagnostic code using the SSM4. (Refer to AC - 21)
(2) Using SSM4, check the diagnostic code again. (Refer to AC - 21)
Criteria: No DTC output

NG → Replacement of air conditioner control ASSY (Refer to AC - 170)

OK

Complete

3	Inspection of wire harness and connector (air conditioner radiator damper servo SUB-ASSY NO.4 - air conditioner control ASSY)

NOTE:
For inspection procedures and precautions, refer to IN - 36.
(1) Disconnect connector D20 of the air conditioner control ASSY.
(2) Disconnect connector A28 of air conditioner radiator damper servo SUB-ASSY NO.4.
(3) Measure the resistance between the terminals.

Resistance (open circuit check):

Inspection terminals	Inspection conditions	Standard value
A28-1(VZ) - D20-13 (S5)	Always	Less than 1 Ω
A28-3(GND) - D20-6 (SG)	Always	Less than 1 Ω
A28-5(TP) - D20-3 (TPPa)	Always	Less than 1 Ω
A28-6(COOL) - D20-12 (AMCPa)	Always	Less than 1 Ω
A28-7(HOT) - D20-11 (AMHPa)	Always	Less than 1 Ω

Resistance (inspection of short-circuit):

Inspection terminals	Inspection conditions	Standard value
A28-1 (VZ) - Chassis ground	Always	10KΩ or more

AC

Inspection terminals	Inspection conditions	Standard value
A28-3 (GND) - Chassis ground	Always	10KΩ or more
A28-5 (TP) - Chassis ground	Always	10KΩ or more
A28-6 (COOL) - Chassis ground	Always	10KΩ or more
A28-7 (HOT) - Chassis ground	Always	10KΩ or more

NG → Repair or replacement of wiring harness or connector

OK

4	Replacement with a new air mix damper servo SUB-ASSY

(1) Replace with a new air mix damper servo SUB-ASSY NO.4. (Refer to AC - 108)

Next

5	Checking diagnostic codes

(1) Clear the diagnostic code using the SSM4. (Refer to AC - 21)
(2) Using SSM4, check the diagnostic code again. (Refer to AC - 21)
Criteria: No DTC output

NG → Replacement of air conditioner control ASSY (Refer to AC - 170)

OK

AC

Complete (malfunction of air conditioner radiator damper servo SUB-ASSY NO.4)

DTC	B1438	Mode Door Actuator Potentiometer Circuit Open
DTC	B1439	Mode Door Actuator Potentiometer Circuit Short
DTC	B1443	Mode Door Actuator Lock

Circuit description
The damper position of air conditioner radiator damper servo SUB-ASSY NO.3 is detected by the air conditioner control ASSY. Based on this, the air conditioner control ASSY rotates the motor (forward or backward) to move the mode damper at the desired position. This controls switching of the outlets.

DTC NO.	Detecting conditions 1.Diagnosis condition 2.Abnormal condition 3.Judgment time for abnormality	Inspection parts
B1438	1. When the damper servo is operated 2. Open circuit of damper servo circuit 3. Judgment for current malfunction: 0.02 seconds or more Judgment for past malfunction (SSM4): 0.02 seconds or more	• Air conditioner radiator damper servo SUB-ASSY NO.3 • Wire harness and connector (air conditioner control ASSY - air conditioner radiator damper servo SUB-ASSY NO.3) • Air conditioner control ASSY

DTC NO.	Detecting conditions 1.Diagnosis condition 2.Abnormal condition 3.Judgment time for abnormality	Inspection parts
B1439	1. When the damper servo is operated 2. Short circuit in damper servo circuit 3. Judgment for current malfunction: 0.02 seconds or more Judgment for past malfunction (SSM4): 0.02 seconds or more	• Air conditioner radiator damper servo SUB-ASSY NO.3 • Wire harness and connector (air conditioner control ASSY - air conditioner radiator damper servo SUB-ASSY NO.3) • Air conditioner control ASSY
B1443	1. When the damper servo is operated 2. Although the damper servo drive request signal is output, the position information of the servo is not changed or abnormal 3. Judgment for current malfunction: 16 seconds or more continuously Judgment for past malfunction (SSM4): 16 seconds or more continuously	• Air conditioner radiator damper servo SUB-ASSY NO.3 • Wire harness and connector (air conditioner control ASSY - air conditioner radiator damper servo SUB-ASSY NO.3) • Air conditioner control ASSY

Circuit figure

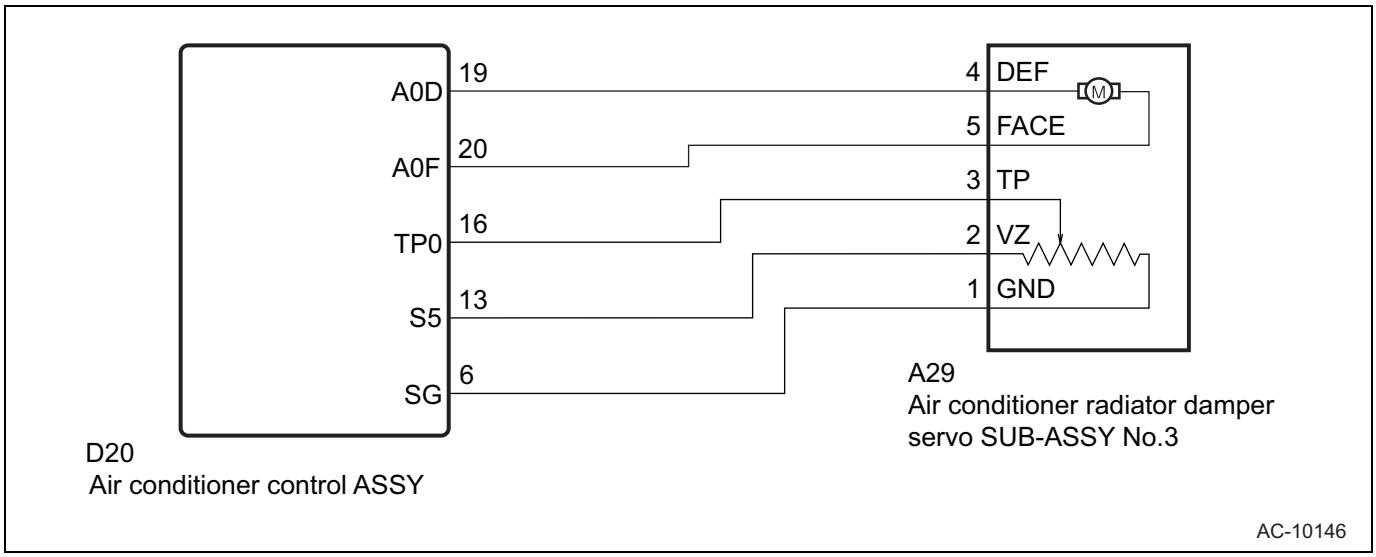

AC

Inspection steps

CAUTION:

This diagnostic code is output for lock of the damper link or damper. Before performing the inspection, make sure that there is no mechanical malfunction.

1	Reading of SSM4 data (outlet damper target opening, outlet damper actual opening)

(1) Using the SSM4, follow the screen display and check the [Data monitor].

Criteria: The opening display is normal according to operation of the outlet switch.

SSM4 screen: [Each System] →[Air Conditioner] →[Data monitor]

Item name [Symbol]	Description/display range	Normal value	Remarks
[Mode Door Actuator Position Target]	Target opening information of the mode damper is displayed. Display range: -32.68 to 133.33%	• In FACE: -16.7 • In B/L: 10 • In FOOT: 70 • In FOOT/DEF: 90 • In DEF: 116.7	In operation of the outlet opening switch Air conditioner radiator damper servo SUB-ASSY NO.3 system
[Mode Door Actuator Position]	Actual position information of the mode damper is displayed. Display range: -32.68 to 133.33%	The outlet damper target opening is followed.	In operation of the outlet opening switch Air conditioner radiator damper servo SUB-ASSY NO.3 system

NG → Go to Step 3.

OK

2	Checking diagnostic codes

(1) Clear the diagnostic code using the SSM4. (Refer to AC - 21)
(2) Using SSM4, check the diagnostic code again. (Refer to AC - 21)
Criteria: No DTC output

NG → Replacement of air conditioner control ASSY (Refer to AC - 170)

OK

Complete (malfunction of air conditioner radiator damper servo SUB-ASSY NO.3)

AC

3	Inspection of wire harness or connector (air conditioner radiator damper servo SUB-ASSY NO.3 - air conditioner control ASSY)

NOTE:
For inspection procedures and precautions, refer to
(1) Disconnect connector D20 of the air conditioner control ASSY.
(2) Disconnect connector A29 of air conditioner radiator damper servo SUB-ASSY NO.3.
(3) Measure the resistance between the terminals.

Resistance (open circuit check):

Inspection terminals	Inspection conditions	Standard value
A29-1 (GND) - D20-13 (S5)	Always	Less than 1 Ω
A29-2 (VZ) - D20-6 (SG)	Always	Less than 1 Ω
A29-3(TP) - D20-16 (TPO)	Always	Less than 1 Ω
A29-4(DEF) - D20-19 (ADD)	Always	Less than 1 Ω
A29-5(FACE) - D20-20 (ADF)	Always	Less than 1 Ω

Resistance (inspection of short-circuit):

Inspection terminals	Inspection conditions	Standard value
A29-1 (GND) - Chassis ground	Always	10KΩ or more

Inspection terminals	Inspection conditions	Standard value
A29-2 (VZ) - Chassis ground	Always	10KΩ or more
A29-3 (TP) - Chassis ground	Always	10KΩ or more
A29-4 (DEF) - Chassis ground	Always	10KΩ or more
A29-5 (FACE) - Chassis ground	Always	10KΩ or more

NG → Repair or replacement of wiring harness or connector

OK

4	Replacement with a new mode damper servo

(1) Replace with new air conditioner radiator damper servo SUB-ASSY NO.3. (Refer to AC - 108)

Next

5	Checking diagnostic codes

(1) Clear the diagnostic code using the SSM4. (Refer to AC - 21)
(2) Using SSM4, check the diagnostic code output again. (Refer to AC - 21)
Criteria: No DTC output

NG → Repair or replacement of wiring harness or connector

OK

Complete (malfunction of air conditioner radiator damper servo SUB-ASSY NO.3)

AC

DTC	B1440	Air mix door actuator potentiometer circuit wire break (driver's seat)

DTC	B1442	Air mix door actuator potentiometer circuit short-circuit (driver's seat)

DTC	B1446	Air mix door actuator lock (driver's seat)

Circuit description

The damper position of air conditioner radiator damper servo SUB-ASSY NO.5 (driver's side) is detected by the air conditioner control ASSY. Based on this, the air conditioner control ASSY rotates the motor (forward or backward) to move air conditioner radiator damper servo SUB-ASSY NO.5 at the desired position. This adjusts the air flow rate in the heater core after the evaporator.

Diagnostic codes	Detecting conditions 1.Diagnosis condition 2.Abnormal condition 3.Abnormal period	Faulty part
B1440	1. When air conditioner radiator damper servo SUB-ASSY NO.5 is operated 2. Open circuit of damper servo circuit 3. Judgment for current malfunction: 0.02 seconds or more continuously Judgment for past malfunction (SSM4): 0.02 seconds or more continuously	• Air conditioner radiator damper servo SUB-ASSY NO.5 • Wire harness and connector (air conditioner control ASSY - air conditioner radiator damper servo SUB-ASSY NO.5) • Air conditioner control ASSY
B1442	1. When air conditioner radiator damper servo SUB-ASSY NO.5 is operated 2. Short circuit in damper servo circuit 3. Judgment for current malfunction: 0.02 seconds or more continuously Judgment for past malfunction (SSM4): 0.02 seconds or more continuously	• Air conditioner radiator damper servo SUB-ASSY NO.5 • Wire harness and connector (air conditioner control ASSY - air conditioner radiator damper servo SUB-ASSY NO.5) • Air conditioner control ASSY
B1446	1. When air conditioner radiator damper servo SUB-ASSY NO.5 is operated 2. Although the damper servo drive request signal is output, the position information of the servo is not changed or abnormal 3. Judgment for current malfunction: 16 seconds or more continuously Judgment for past malfunction (SSM4): 16 seconds or more continuously	• Air conditioner radiator damper servo SUB-ASSY NO.5 • Wire harness and connector (air conditioner control ASSY - air conditioner radiator damper servo SUB-ASSY NO.5) • Air conditioner control ASSY

Circuit figure

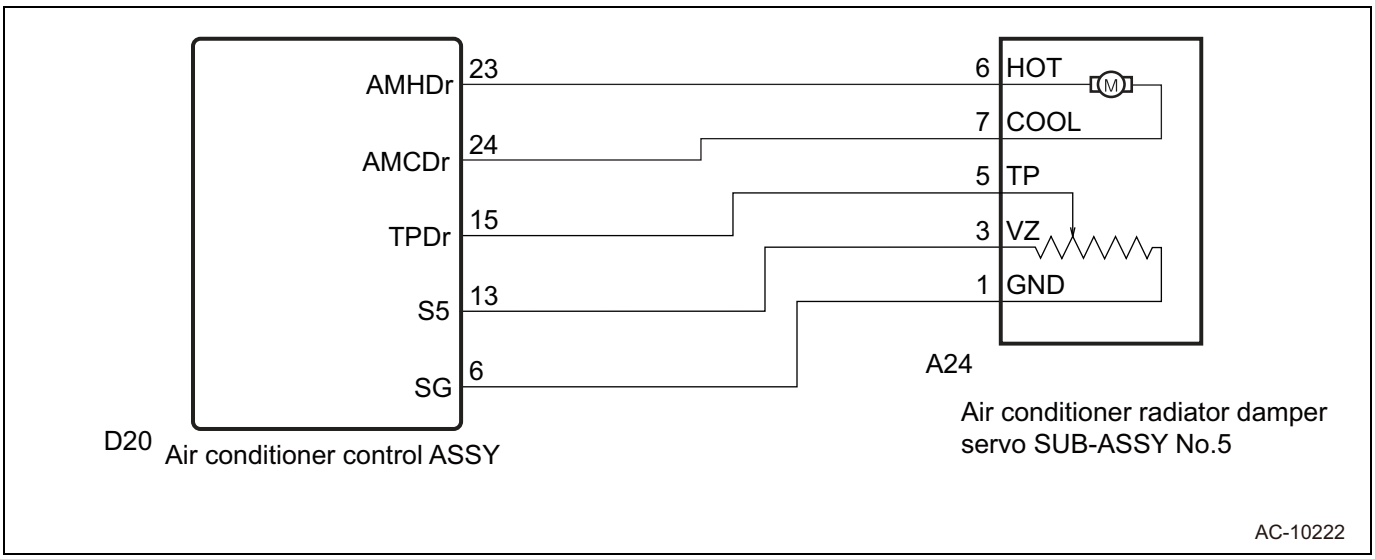

Inspection steps

CAUTION:

This diagnostic code is output for lock of the damper link or damper. Before performing the inspection, make sure that there is no mechanical malfunction.

1	Reading of SSM4 data (driver's seat air mix target opening, driver's seat air mix actual opening)

(1) Using the SSM4, follow the screen display and check the [Data monitor].

Criteria: The opening display is normal according to the setting temperature switch operation.

SSM4 screen: [Each System] →[Air Conditioner] →[Data monitor]

Item name [Symbol]	Description/display range	Normal value	Remarks
[Target air mix door actuator position (driver's side)]	Target position information of the driver's seat side air mix damper is displayed. Display range: -32.680 to 133.33%	• In MAX COOL: -10% • In MAX HOT: 100%	Air conditioner radiator damper servo SUB-ASSY NO.5 system
[Air mix door actuator position (driver's side)]	Actual position information of the driver's seat side air mix damper is displayed. Display range: -32.680 to 133.33%	The target opening is followed.	Air conditioner radiator damper servo SUB-ASSY NO.5 system

NG → Go to Step 3.

OK

2	Checking diagnostic codes

(1) Clear the diagnostic code using the SSM4. (Refer to AC - 21)
(2) Using SSM4, check the diagnostic code again. (Refer to AC - 21)
Criteria: No DTC output

NG → Replacement of air conditioner control ASSY (Refer to AC - 170)

OK

Complete

3	Inspection of wire harness or connector (air conditioner radiator damper servo SUB-ASSY NO.5 - air conditioner control ASSY)

NOTE:
For inspection procedures and precautions, refer to IN - 36.
(1) Disconnect connector D20 of the air conditioner control ASSY.
(2) Disconnect connector A24 of air conditioner radiator damper servo SUB-ASSY NO.5.
(3) Measure the resistance between the terminals.

Resistance (open circuit check):

Inspection terminals	Inspection conditions	Standard value
A24-1(GND) - D20-6 (SG)	Always	Less than 1 Ω
A24-3(VZ) - D20-13 (S5)	Always	Less than 1 Ω
A24-5(TP) - D20-15 (TPDr)	Always	Less than 1 Ω
A24-6 (HOT) - D20-23 (AMHDr)	Always	Less than 1 Ω
A24-7 (COOL) - D20-24 (AMCDr)	Always	Less than 1 Ω

Resistance (inspection of short-circuit):

Inspection terminals	Inspection conditions	Standard value
A24-1 (GND) - Chassis ground	Always	10KΩ or more
A24-3 (VZ) - Chassis ground	Always	10KΩ or more
A24-5 (TP) - Chassis ground	Always	10KΩ or more
A24-6 (HOT) - Chassis ground	Always	10KΩ or more
A24-7 (COOL) - Chassis ground	Always	10KΩ or more

NG → Replace wire harness or connector.

OK

4	Replacement with a normal air mix damper servo SUB-ASSY

(1) Replace with new or normal air conditioner radiator damper servo SUB-ASSY NO.5. (Refer to AC - 108)

Next

5	Checking diagnostic codes

(1) Clear the diagnostic code using the SSM4. (Refer to AC - 21)
(2) Using SSM4, check the diagnostic code output again. (Refer to AC - 21)
Criteria: No DTC output

NG → Replacement of air conditioner control ASSY (Refer to AC - 170)

AC

OK

Complete (malfunction of air conditioner radiator damper servo SUB-ASSY NO.5)

DTC	B14A1	Sunload Sensor Circuit Open

DTC	B14A2	Sunload Sensor Circuit Short

Circuit description

The automatic light control sensor is installed on the upper part of the instrument panel. It is used to detect sunload quantity and to control “AUTO” of the heater & air conditioner system. The output current of the automatic light control sensor varies depending on the sunload quantity. When the sunload quantity is increased, the output current is large. In contrast, when the sunload quantity is reduced, the output current is small. The air conditioner control ASSY reads the current which is output from the automatic light control sensor.

DTC NO.	Detecting conditions 1.Diagnosis condition 2.Abnormal condition 3.Judgment time for abnormality	Inspection parts
B14A1	1. Without sunload 2. Open circuit of automatic light control sensor 3. Judgment for current malfunction: 4 seconds or more continuously Judgment for past malfunction (SSM4): None	• Automatic light control sensor • Wire harness and connector (between automatic light control sensor and - main body ECM) • Wire harness and connector (between automatic light control sensor and - air conditioner control ASSY) • Main body ECM (multiplex network body computer) • Air conditioner control ASSY
B14A2	1. With sunload 2. Short circuit in automatic light control sensor circuit 3. Judgment for current malfunction: 4 seconds or more continuously Judgment for past malfunction (SSM4): 4 seconds or more continuously	• Automatic light control sensor • Wire harness and connector (between automatic light control sensor and - main body ECM) • Wire harness and connector (between automatic light control sensor and - air conditioner control ASSY) • Main body ECM (multiplex network body computer) • Air conditioner control ASSY

NOTE:
- If diagnostic code B1244 (Light Sensor Circuit) is also output, the automatic light control sensor power may be abnormal.
- When the sunload sensor check is performed indoors or in the shade, it could be diagnosed as having an open circuit. Always check the sunload sensor in direct sunlight.

Circuit figure

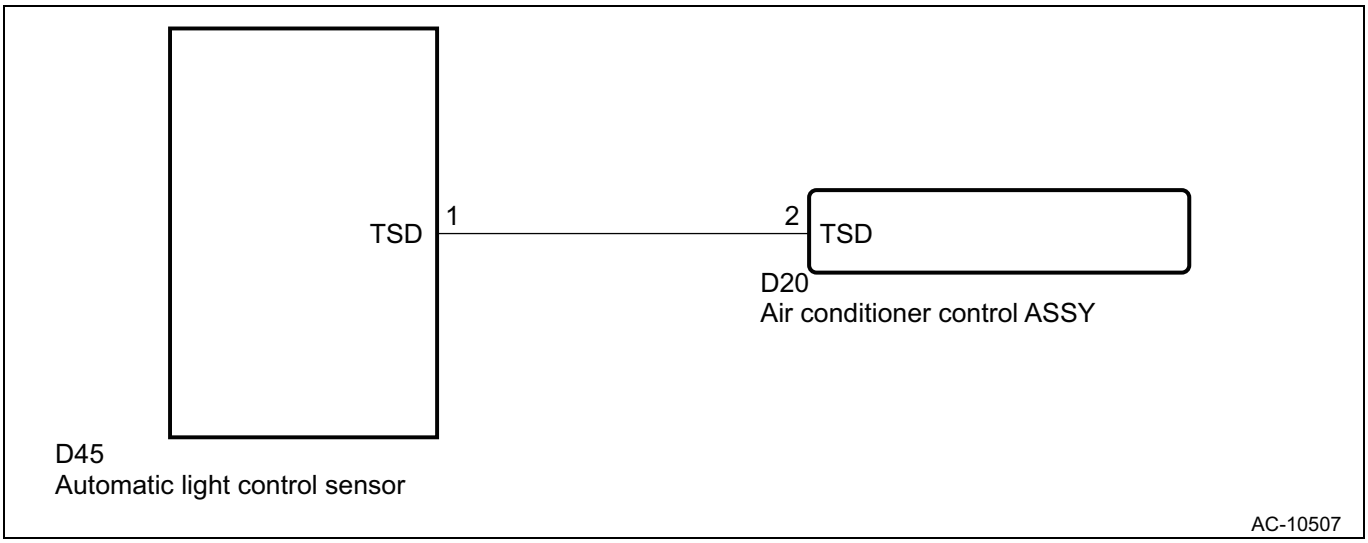

Inspection steps

1	Reading of SSM4 data (sunload sensor)

(1) Using the SSM4, follow the screen display and check the [Data monitor].
Criteria: Value according to sunload is displayed.

SSM4 screen: [Each System] →[Air Conditioner] →[Data monitor]

Item name	Description/display range	Normal value	Remarks
[Quantity of Sun-load]	Light strength at the automatic light control sensor is displayed. Display range: 0 to 4448W/m^2	In the range from 0 to 4448, it is increased for brighter light (the value according to sunload is displayed). • Without sunload: (0) is displayed. • In open/short circuit: Default value (0) is displayed.	With sunload Automatic light control sensor circuit

NG → Go to Step 3.

OK

2	Checking diagnostic codes

(1) Clear the diagnostic code using the SSM4. (Refer to AC - 21)
(2) Using SSM4, check the diagnostic code again. (Refer to AC - 21)
Criteria: No DTC output

NG → Replacement of air conditioner control ASSY (Refer to AC - 170)

OK

Complete

3	Inspection of wire harness and connector (automatic light control sensor - air conditioner control ASSY)

AC

NOTE:
For inspection procedures and precautions, refer to IN - 36.
(1) Disconnect the connector D45 of the automatic light control sensor.
(2) Disconnect connector D20 of the air conditioner control ASSY.
(3) Inspect the resistance between connector terminals at the vehicle wire harness side.

Resistance (open circuit check)

Inspection terminals	Inspection conditions	Standard value
D20-2 (TSD) - D45-1 (TSD)	Always	Less than 1 Ω

Resistance (short circuit check)

Inspection terminals	Inspection conditions	Standard value
D20-2 (TSD) - chassis ground	Always	10 kΩ or more

NG → Repair or replacement of wiring harness or connector

OK

4	Inspection of the automatic light control sensor

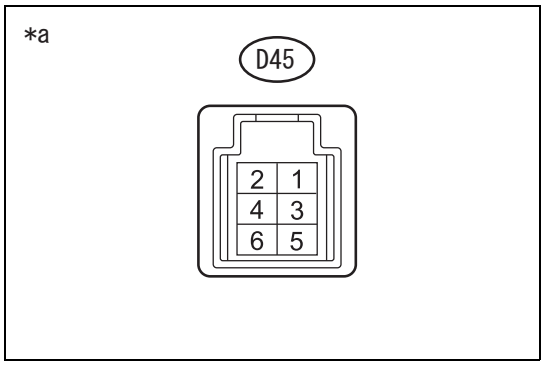

NOTE:
For inspection procedures and precautions, refer to IN - 36.
(1) Connect connector D45 of the automatic light control sensor.
(2) Measure the voltage between the terminals.
Voltage

Inspection terminals	Inspection conditions	Standard value
D45-1 (TSD) - D45-6 (CLTE)	IG ON When sunload light or inspection light is placed close	0.8 to 4.3V (The voltage varies depending on the light strength.)
D45-1 (TSD) - D45-6 (CLTE)	IG ON Condition without direct exposure to light (Cover the sensor with a cloth.)	Less than 0.8V

NOTE:
If the light is weak, the sensor may not respond. Use an incandescent light to take measurements by emitting light at the distance of about 30 cm.

Captions in illustration

*a	Rear of vehicle wire harness connector (Automatic light control sensor connector)

NG → Replacement of the automatic light control sensor (Refer to AC - 162)

OK

Replacement of air conditioner control ASSY (Refer to AC - 170)

AC

DTC	U0073	CAN Communication Error
DTC	U0100	Lost Communication With ECM/PCM "A"
DTC	U0101	Lost Communication With TCM
DTC	U0122	Lost Communication With Vehicle Dynamics Control Module
DTC	U0140	Lost Communication With Body Control Module
DTC	U0155	Lost Communication With Instrument Panel Cluster (IPC) Control Module
DTC	U0401	Invalid Data Received From ECM/PCM "A"
DTC	U0402	Invalid Data Received From TCM
DTC	U0416	Invalid Data Received From Vehicle Dynamics Control Module
DTC	U0422	Invalid Data Received From Body Control Module
DTC	U0423	Invalid Data Received From Instrument Panel Cluster Control Module

Description of functions

The air conditioner amplifier ASSY receives signals from the engine control computer, steering control computer, main body ECM (multiplex network body computer) and combination meter ASSY through the CAN communication.

AC

DTC NO.	Detecting conditions	Inspection parts
U0073	CAN Communication Error	• CAN communication system
U0100	Lost Communication With ECM/PCM "A"	• CAN communication system • Engine control computer
U0101	Lost Communication With TCM	• CAN communication system • Transmission control computer ASSY
U0122	Lost Communication With Vehicle Dynamics Control Module	• CAN communication system • Brake actuator ASSY
U0140	Lost Communication With Body Control Module	• CAN communication system • Main body ECM (Network gateway computer)
U0155	Lost Communication With Instrument Panel Cluster (IPC) Control Module	• CAN communication system • Combination meter ASSY
U0401	Invalid Data Received From ECM/PCM "A"	• CAN communication system • Engine control computer
U0402	Invalid Data Received From TCM	• CAN communication system • Transmission control computer ASSY
U0416	Invalid Data Received From Vehicle Dynamics Control Module	• CAN communication system • Brake actuator ASSY
U0422	Invalid Data Received From Body Control Module	• CAN communication system • Main body ECM (Network gateway computer)
U0423	Invalid Data Received From Instrument Panel Cluster Control Module	• CAN communication system • Combination meter ASSY

Inspection steps

1	Checking diagnostic codes

(1) Clear the diagnostic code using the SSM4. (Refer to AC - 21)
(2) Using SSM4, check the diagnostic code again. (Refer to AC - 21)
Criteria: Diagnostic code is not output.

NOTE:
- When the diagnostic code of abnormal CAN communication system is output, refer to "How to troubleshoot" of the CAN communication system.
- If the diagnostic code of abnormal CAN communication system and other diagnostic code are output at the same time, perform troubleshooting on other diagnostic code after recovery of abnormal CAN communication.

NG → To CAN communication system (Refer to NW - 30)

OK

Go to "How to simulate trouble phenomenon" (Refer to IN - 32)

Blower motor circuit

Circuit description

The blower motor SUB-ASSY (with fan) reads the signal from the air conditioner control ASSY and controls the revolution and speed of the motor.

Circuit figure

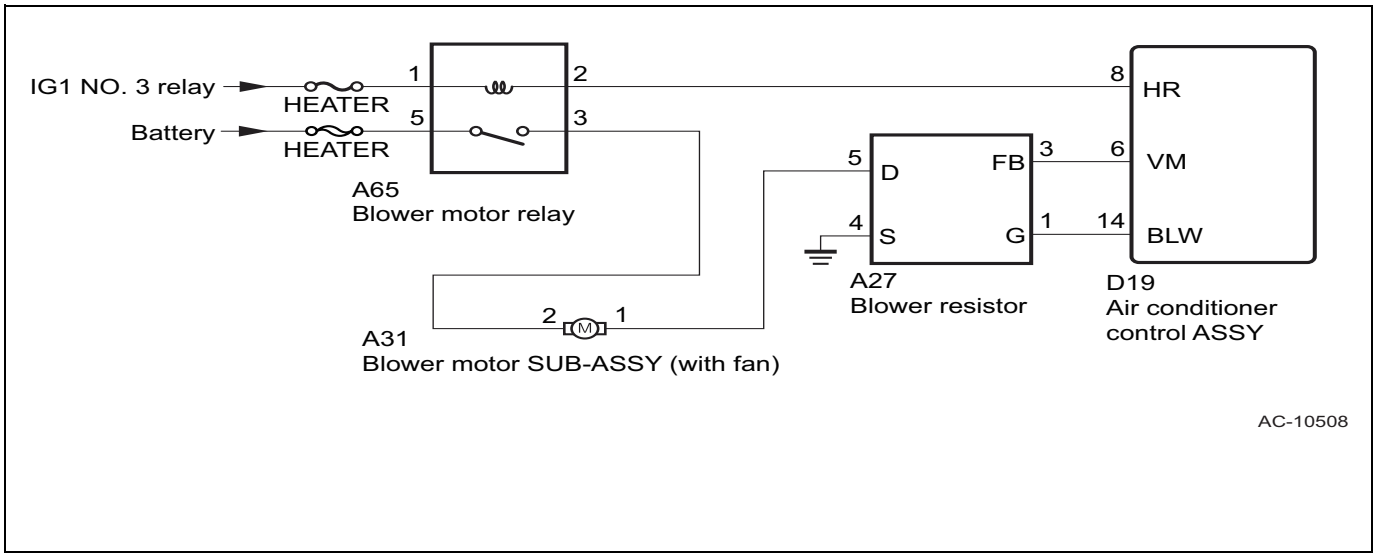

Inspection steps

CAUTION:

Before performing the troubleshooting, check the fuse of this circuit.

1	Implementation of SSM4 system operation check mode (blower air flow)

(1) Connect the SSM4 to the DLC3.
(2) Turn the ignition switch to ON.
(3) Using SSM4, perform an [Active Test] by following the display.

SSM4 screen: [Each System] →[Air Conditioner] →[Active Test]

Item name	Drive
[Blower Fan Level Setting]	Operation of blower motor SUB-ASSY (with fan) Operate in the range from 0 to 31 (Level).

Result

Result	Go to
Blower motor SUB-ASSY (with fan) operates normally.	A
Blower motor SUB-ASSY (with fan) does not operate.	B
Although the blower motor SUB-ASSY (with fan) operates normally, the air flow is not changed.	C

B → Go to Step 2.

C → Go to Step 9.

A

Go to "How to simulate trouble phenomenon" (Refer to AC - 138)

2	Unit inspection of blower motor relay

(1) Remove the blower motor relay from the relay block ASSY.
(2) Inspect the individual blower motor relay. (Refer to AC - 181)

NG → Replacement of heater relay

OK

3	Inspection of wire harness and connector (blower motor relay - air conditioner control ASSY)

NOTE:
For inspection procedures and precautions, refer to IN - 36.

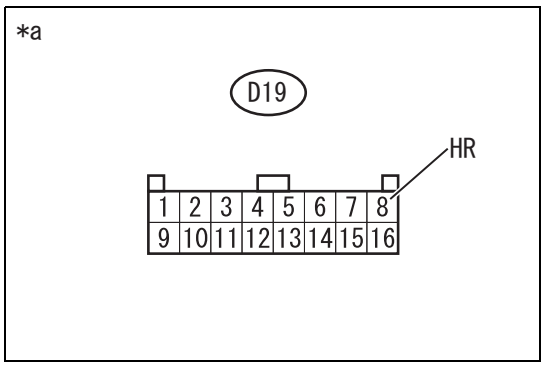

(1) Connect the blower motor relay to the relay block ASSY.
(2) Disconnect connector D19 from the air conditioner control ASSY.
(3) Measure the voltage between the terminals.

Voltage

Inspection terminals	Inspection conditions	Standard value
D19-8 (HR) - Chassis ground	Always	10 to 16V

Captions in illustration

*a	Front side of vehicle wiring harness connector (Air conditioner control ASSY connector)

NG → Repair or replacement of wiring harness or connector

OK

4	Inspection of wire harness and connector (blower motor SUB-ASSY (with fan) - power supply system)

NOTE:
For inspection procedures and precautions, refer to IN - 36.

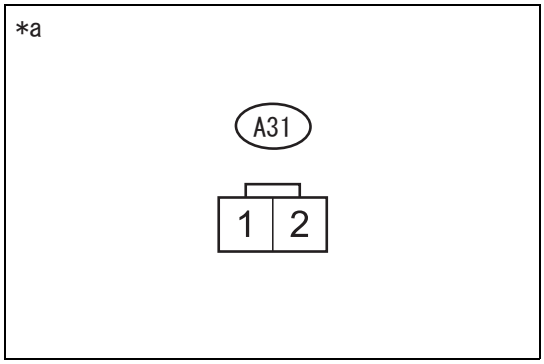

(1) Connect connector D19 to the air conditioner control ASSY.
(2) Measure the voltage between the terminals.
Voltage

Inspection terminals	Inspection conditions	Standard value
A31-2 - Chassis ground	IG ON, blower ON	10 to 16V

Captions in illustration

*a	Connector connected (Blower motor SUB-ASSY (with fan))

NG → Repair or replacement of wiring harness or connector

OK

5	Unit inspection of blower motor SUB-ASSY (with fan)

(1) Inspect the individual blower motor SUB-ASSY (with fan). (Refer to AC - 139)

NG → Go to "How to simulate trouble phenomenon" (Refer to AC - 138)

AC

OK

6	Inspection of wire harness and connector (blower motor SUB-ASSY (with fan) - blower register)

NOTE:
For inspection procedures and precautions, refer to IN - 36.

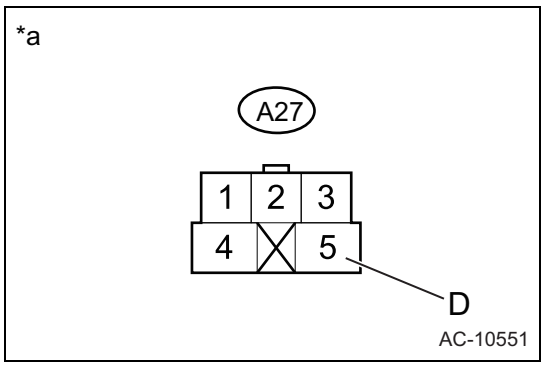

(1) Disconnect connector A27 from the blower register.
(2) Measure the voltage between the terminals.
Voltage

Inspection terminals	Inspection conditions	Standard value
A27-5 (D) - Chassis ground	IG ON, blower ON	10 to 16V

Captions in illustration

*a	Front side of vehicle wiring harness connector (Blower register connector)

NG → Repair or replacement of wiring harness or connector

OK

7	Inspection of wire harness and connector (blower resistor - chassis ground)

NOTE:
For inspection procedures and precautions, refer to IN - 36.
(1) Measure the resistance between the terminals.
Resistance

Inspection terminals	Inspection conditions	Standard value
A27-4 (S) - Chassis ground	Always	Less than 1 Ω

NG → Repair or replacement of wiring harness or connector

OK

8	Inspection of wire harness and connector (blower register - air conditioner control ASSY)

NOTE:
For inspection procedures and precautions, refer to IN - 36.
(1) Disconnect connector D19 from the air conditioner control ASSY.
(2) Measure the resistance between the terminals.
Resistance (open circuit check)

Inspection terminals	Inspection conditions	Standard value
A27-1(G) - D19-14 (BLW)	Always	Less than 1 Ω
A27-3(FB) - D19-6 (VM)	Always	Less than 1 Ω

Resistance (short circuit check)

Inspection terminals	Inspection conditions	Standard value
A27-1 (G) - Chassis ground	Always	10 kΩ or more
A27-3 (FB) - Chassis ground	Always	10 kΩ or more

NG → Repair or replacement of wiring harness or connector

OK

9	Replacement of blower resistor

(1) Replace with a new or normal blower resistor. (Refer to AC - 140)

Next

10	Check operation.

(1) Check if the blower motor SUB-ASSY (with fan) operates normally.
Criteria: The blower motor SUB-ASSY (with fan) operates normally.

AC

NG → Replacement of air conditioner control ASSY (Refer to AC - 170)

OK

Complete (malfunction of blower resistor)

Magnet clutch relay circuit

Circuit description

The air conditioner control ASSY transmits the magnet clutch ON instruction to the engine control computer through the CAN communication. The engine control computer operates the magnet clutch relay and turns ON the magnet clutch.

Circuit figure

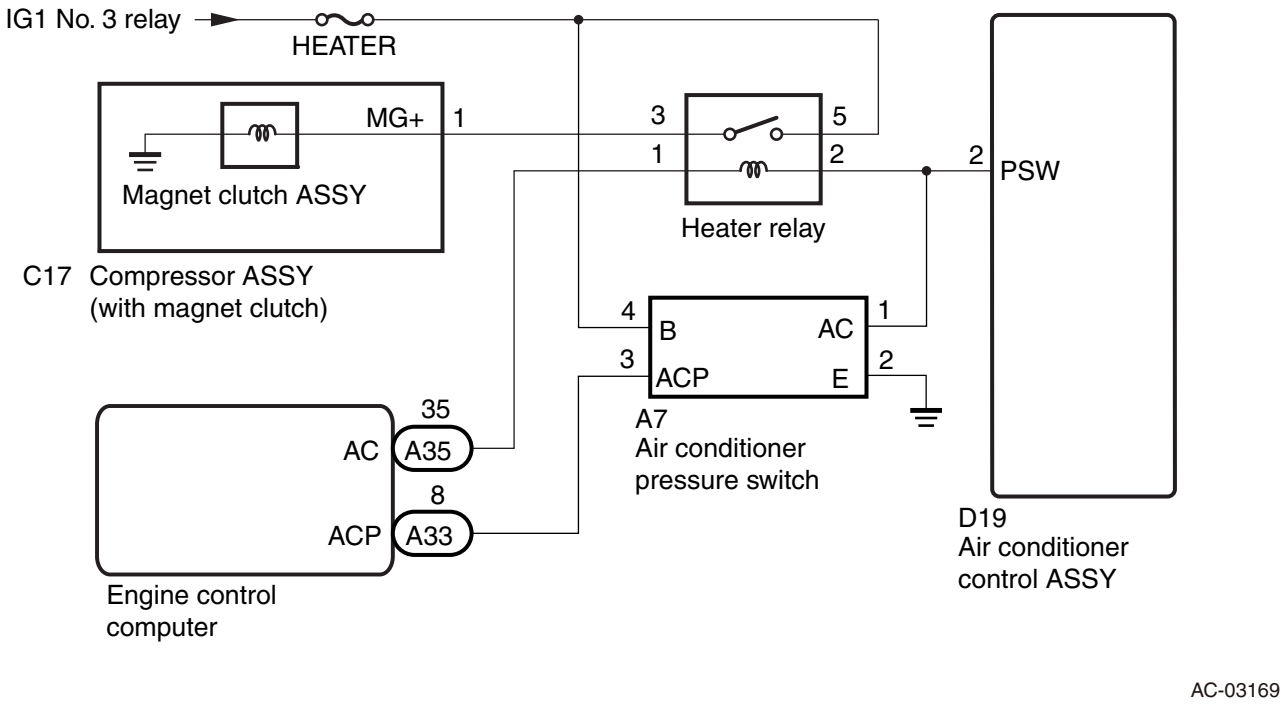

Inspection steps

CAUTION:

- Before performing the troubleshooting, check the fuse of this circuit.
- This inspection may be affected by abnormality of the engine control computer. Before inspection, check the diagnostic code of “engine” and make sure that it is normal.

1	Reading of SSM4 data (air conditioner signal)

(1) Using the SSM4, follow the screen display and check the [Data monitor].

Criteria: The display changes according to operation of the air conditioner switch.

AC

SSM4 screen: [Each System] →[Engine Control System] →[Data monitor]

Item name	Description/display range	Normal value	Remarks
[A/C Magnetic Clutch Relay]	Air conditioner switch status is displayed. Display: ON - OFF	ON: Air conditioner ON OFF: Air conditioner OFF	The air conditioner signal system may have an error, if any.

NG → Go to Step 9.

OK

2	Reading of SSM4 data (pressure switch status)

(1) Using the SSM4, follow the screen display and check the [Data monitor].

Criteria: The display of the pressure switch status is 0 (normal).

SSM4 screen: [Each System] →[Air Conditioner] →[Data monitor]

Item name	Description/display range	Normal value	Remarks
[A/C Pressure Switch]	Refrigerant pressure switch status is displayed. Display range: Normal - Abnormal	Refrigerant pressure status is displayed.	The refrigerant quantity may be abnormal, if any.

NG → Go to Step 10.

OK

3	Unit inspection of heater relay

(1) Inspect the individual heater relay. (Refer to AC - 181)

NG → Replacement of heater relay

OK

AC

4	Inspection of wire harness and connector (heater relay - power supply system)

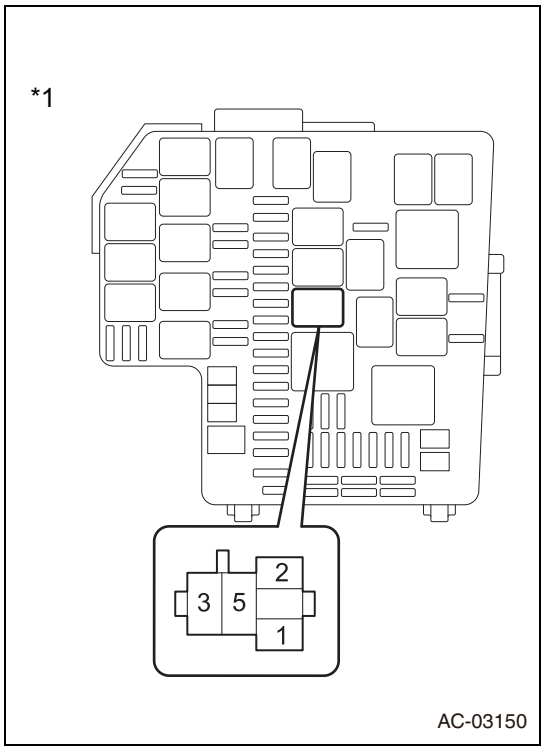

NOTE:
For inspection procedures and precautions, refer to IN - 36.
(1) Inspect the voltage between connector terminals at the vehicle wire harness side.

Voltage

Inspection terminals	Inspection conditions	Standard value
5 - Chassis ground	IG OFF	Less than 1 V
	IG ON	11 to 14V

Captions in illustration

*1	Engine compartment relay block

NG → Repair or replacement of wiring harness or connector

OK

5	Inspection of wire harness and connector (heater relay - air conditioner control ASSY)

NOTE:
For inspection procedures and precautions, refer to IN - 36.
(1) Remove the heater relay from the engine compartment relay block.
(2) Disconnect connector D19 from the air conditioner control ASSY.
(3) Inspect the resistance between connector terminals at the vehicle wire harness side.

Resistance

Inspection terminals	Inspection conditions	Standard value
2 - D19-2(PSW)	Always	Less than 1 Ω
2 - Chassis ground	Always	10 kΩ or more

NG → Repair or replacement of wiring harness or connector

OK

6	Inspection of wire harness and connector (heater relay - engine control computer)

NOTE:
For inspection procedures and precautions, refer to IN - 36.
(1) Remove the heater relay from the engine compartment relay block.
(2) Disconnect connector A35 from the engine control computer.
(3) Measure the resistance between the terminals.

Resistance

Inspection terminals	Inspection conditions	Standard value
1 - A35-35(AC)	Always	Less than 1 Ω
1 - Chassis ground	Always	10 kΩ or more

NG → Repair or replacement of wiring harness or connector

OK

7	Inspection of wire harness and connector (compressor ASSY (with magnet clutch) - power supply system)

NOTE:
For inspection procedures and precautions, refer to IN - 36.
(1) Install the heater relay to the engine compartment relay block.
(2) Inspect the voltage between connector terminals at the vehicle wire harness side.

Voltage

Inspection terminals	Inspection conditions	Standard value
C17-1 (MG+) - Chassis ground	IG OFF	Less than 1 V
	IG ON	10 to 16V

NG → Repair or replacement of wiring harness or connector

OK

8	Unit inspection of compressor ASSY (with magnet clutch)

AC

NOTE:
For inspection procedures and precautions, refer to IN - 36.
(1) Disconnect connector C17 of the compressor ASSY (with magnet clutch).
(2) Check the resistance between the connector terminals.

Resistance

Inspection terminals	Inspection conditions	Standard value
C17-1 (MG+) - Chassis ground	Always	10 kΩ or more

NG → Replacement of compressor ASSY (with magnet clutch) (Refer to AC - 145)

OK

9	Inspection of air conditioner control ASSY

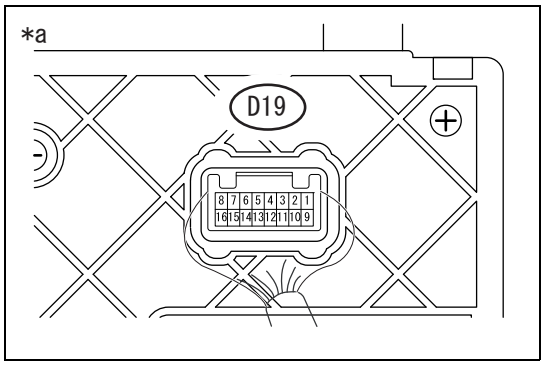

NOTE:
For inspection procedures and precautions, refer to IN - 36.
(1) Check the voltage between connector terminals.
Voltage

Inspection terminals	Inspection conditions	Standard value
D19-2 (PSW) - Chassis ground	IG ON Air conditioner switch OFF	10 to 16V
D19-2 (PSW) - Chassis ground	IG ON Air conditioner switch ON	Less than 1 V

Captions in illustration

*a	Connector connected (Air conditioner control ASSY)

NG → Replacement of air conditioner control ASSY (Refer to AC - 170)

OK

Replacement of engine control computer

10	Check of refrigerant pressure

(1) Install the air conditioner tool.
(2) Check the gauge pressure to inspect filling of the refrigerant gas. (Refer to AC - 7)
Criteria: Refrigerant gas is full.

NG → Adjustment of refrigerant level

OK

11	Inspection of wire harness and connector (air conditioner pressure switch - power supply system)

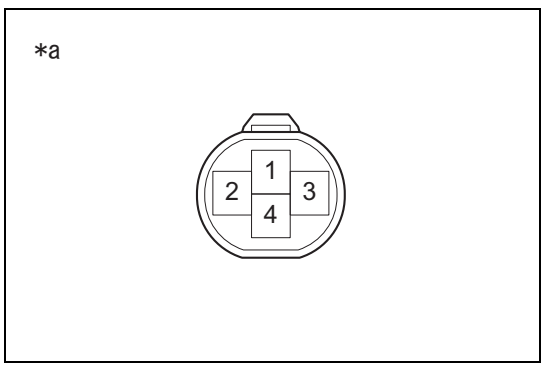

(1) Disconnect connector A7 from the air conditioner pressure switch.
(2) Check the voltage between connector terminals.
Voltage

Inspection terminals	Inspection conditions	Standard value
A7-4 (B) - Chassis ground	IG ON	10 to 16V

(3) Check the resistance between the connector terminals.
Resistance

Inspection terminals	Inspection conditions	Standard value
A7-2 (E) - Chassis ground	Always	Less than 1 Ω

Captions in illustration

*a	Connector not connected (Air conditioner pressure switch)

NG → Repair or replacement of wiring harness or connector

OK

12	Inspection of wire harness and connector (air conditioner pressure switch- chassis ground)

(1) Check the resistance between the connector terminals.

Resistance

Inspection terminals	Inspection conditions	Standard value
A7-2 (E) - Chassis ground	Always	Less than 1 Ω

NG → Repair or replacement of wiring harness or connector

OK

13	Inspection of wire harness and connector (air conditioner pressure switch - engine control computer)

(1) Disconnect connector A33 from the engine control computer.
(2) Check the resistance between the connector terminals.

Resistance

Inspection terminals	Inspection conditions	Standard value
A7-3(ACP) - A33-8(ACP)	Always	Less than 1 Ω
A7-3 (ACP) - Chassis ground	Always	10 kΩ or more

NG → Repair or replacement of wiring harness or connector

OK

AC

14	Inspection of wire harness and connector (air conditioner pressure switch - heater relay)

(1) Remove the heater relay from the engine compartment relay block.
(2) Inspect the resistance between connector terminals at the vehicle wire harness side.

Resistance

Inspection terminals	Inspection conditions	Standard value
A7-1(AC) - 2	Always	Less than 1 Ω
A7-1 (AC) - Chassis ground	Always	10 kΩ or more

NG → Repair or replacement of wiring harness or connector

OK

15	Unit inspection of air conditioner pressure switch

NG → Replacement of air conditioner pressure switch

OK

16	Replacement of engine control computer

(1) Replace with a new or normal engine control computer. (Refer to ES - 670)

Next

17	Reading of SSM4 data

(1) Using the SSM4, follow the screen display and check the [Data monitor].
Criteria: The display of the pressure switch status is 0 (normal).

SSM4 screen: [Each System] →[Air Conditioner] →[Data monitor]

Item name	Description/display range	Normal value	Remarks
[A/C Pressure Switch]	Refrigerant pressure switch status is displayed. Display range: Normal - Abnormal	Refrigerant pressure status is displayed.	-

NG → Replacement of air conditioner control ASSY (Refer to AC - 170)

OK

Complete (malfunction of engine control computer)

Heater & air conditioner system (for manual air conditioning system)

Function inspection

1. Check of cooling performance
   (1) Install the air conditioner tool set to the vehicle.
   (2) Set the vehicle to the following conditions. [*1]

Item	Conditions
Vehicle body	Vehicle parked condition in shade
Door	Full open
A/C switch	ON
Engine speed	2000 r/min
FRESH/RECIRC damper position	RECIRC position
Outlet opening damper position	FACE
Setting temperature	LO (MAX COLD)
Blower speed	HI
Air conditioner inlet opening temperature *2	30 to 35°C {86 to 95°F}
Condenser pressure (gauge high pressure side) *3	1.47 to 1.67 MPa (15 to 17 kgf/cm^2)

NOTE:
*2···The inlet opening temperature can be judged correctly only in the range from 30 to 35°C {86 to 95°F}. If the temperature is low, postpone the test.
*3···If the condenser pressure (gauge high pressure side) is high, reduce the pressure by watering the condenser. If it is too low, increase the pressure by placing a cover over the condenser.

   (3) Place a wet-and-dry-bulb thermometer (necessary for humidity) at the inlet opening and measure the temperature by inserting the bulb of the dry thermometer at the center of the outlet opening.
   (4) Operate the air conditioner under the conditions in [*1] to make the outlet opening temperature stable. (About 5 to 6 minutes)
   (5) Measure the dry and wet bulb temperatures at the inlet opening and the temperature at the outlet opening.
   (6) Obtain the relative humidity by applying the measurement values of the dry/wet bulb temperatures at the inlet opening to the air diagram.

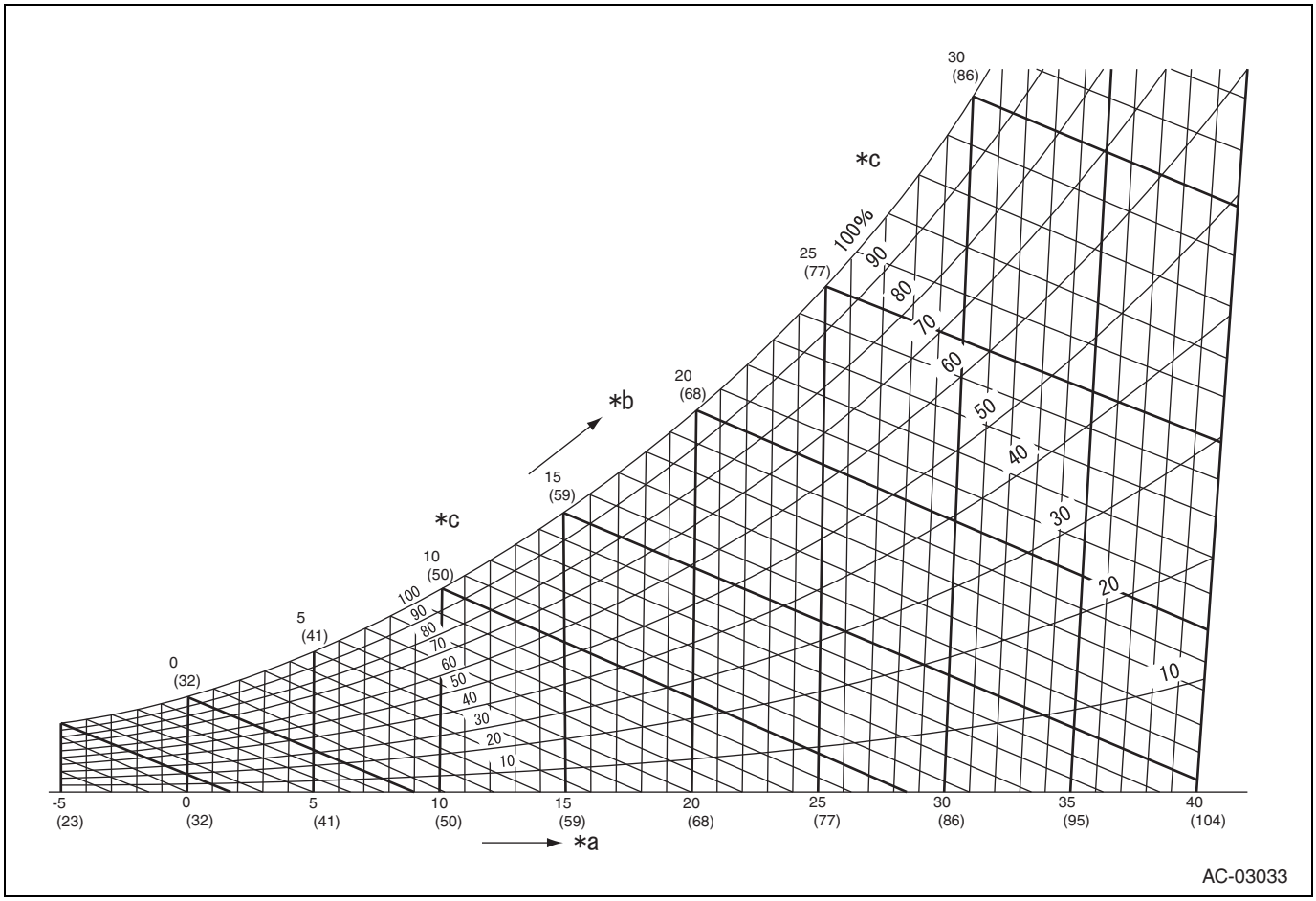

Captions in illustration

*a	Dry bulb temperature (°C {°F})	*b	Wet bulb temperature (°C {°F})
*c	Relative humidity (%)	-	-

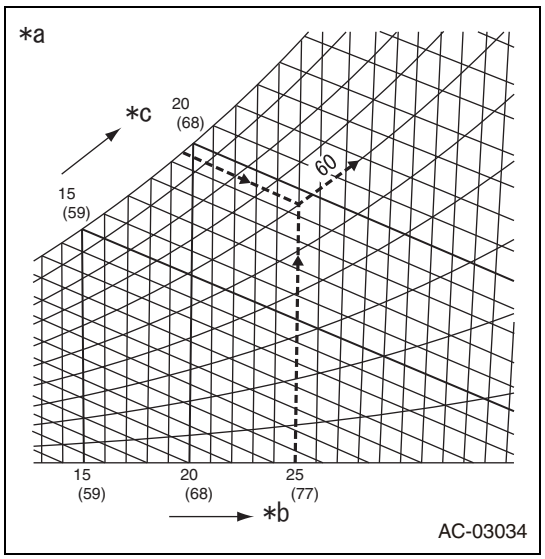

(a)For relative humidity, when the dry bulb temperature of the wet-and-dry-bulb thermometer at the inlet opening is 25°C {77°F} and the wet bulb temperature is 19.5°C {67.1°F}, the intersection of the broken lines in the figure is the relative humidity. In this case, it is 60%.

Captions in illustration

*a	Example
*b	Dry bulb temperature (°C {°F})
*c	Wet bulb temperature (°C)

(7) Check the cooling performance by applying the difference of measured temperatures between inlet opening and outlet opening and the relative humidity to the standard performance table.

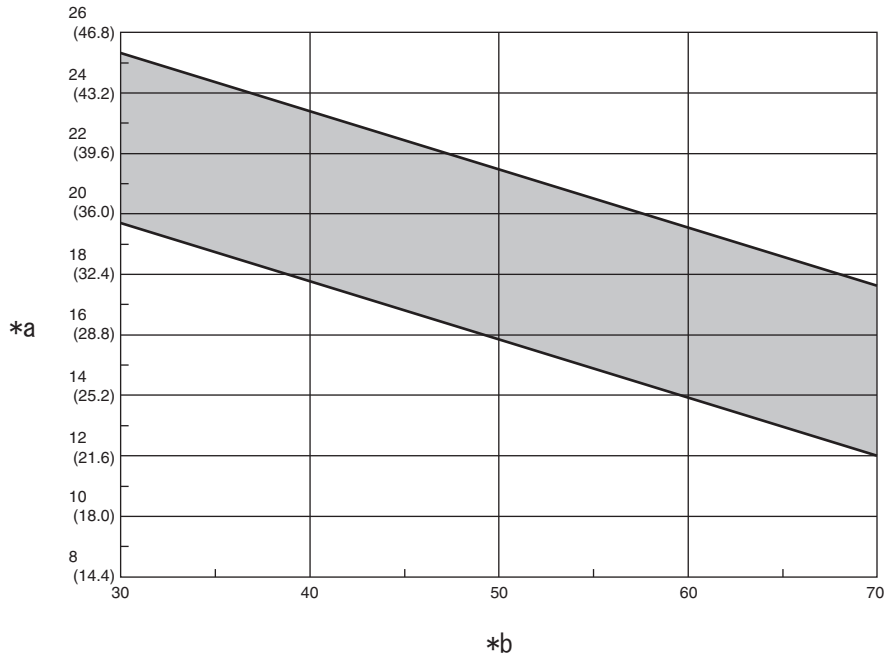

Captions in illustration

*a	Difference between inlet opening and outlet opening temperatures (°C {°F})	*b	Relative humidity (%)

Criteria: The value must be within the shaded area of the diagram.

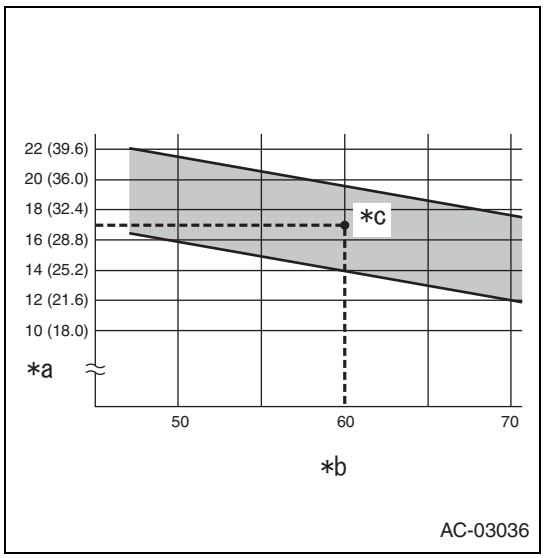

(a) To obtain the cooling performance using the standard performance table, an example when the difference of temperatures between the inlet opening and the outlet opening is 17°C {30.6°F} and the relative humidity is 60% is shown below.

Captions in illustration

*a	Difference between inlet opening and outlet opening temperatures (°C {°F})
*b	Relative humidity (%)
*c	Intersection

AC

2. Check of refrigerant gas pressure
   (1) Check of refrigerant gas pressure with gauge

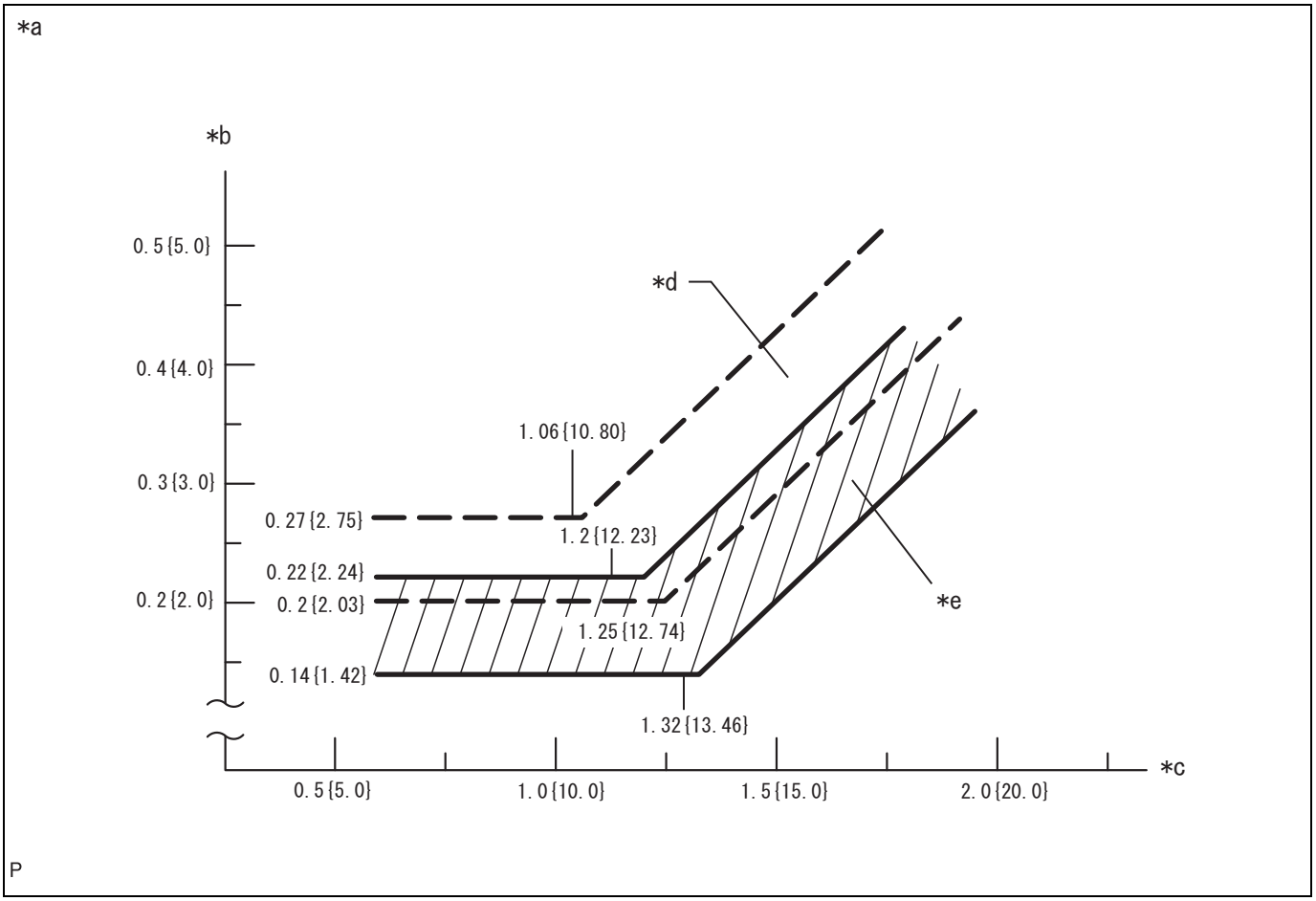

Captions in illustration

*a	Gauge reading reference data	*b	Pressure at low pressure side MPa {kgf/cm^2}
*c	Pressure at high pressure side MPa {kgf/cm^2}	*d	Blower HI range
*e	Blower LO range	-	-

AC

(a)Attach the air conditioner tool set.

(b)Set the vehicle to the following conditions. [*2]

Item	Conditions
Engine	After warming-up
Door	Full open
A/C	ON
Engine speed	2000 r/min
RECIRC switch	RECIRC position
Setting temperature display	LO (MAX COLD)
Blower speed	HI
Air conditioner inlet opening temperature	30 to 35°C {86 to 95°F}

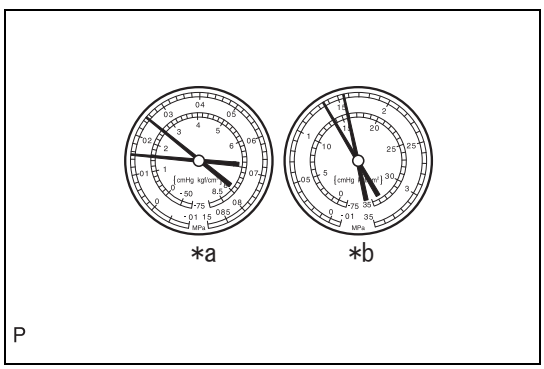

(c)Check the gauge value in [*2].

Standard value: 0.13 to 0.20 MPa (1.3 to 2.0 kgf/cm^2) (Low pressure side)

1.47 to 1.67 MPa (15 to 17 kgf/cm^2) (High pressure side)

Captions in illustration

*a	Low pressure side
*b	High pressure side

NOTE:

The standard value indicates the normal charge level of refrigerant gas.

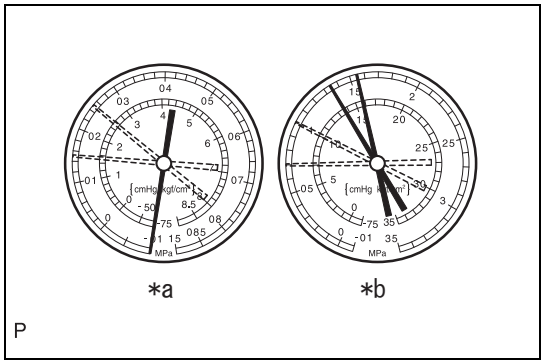

(d)Check the gauge value in [*2].

NOTE:

The gauge reading indicates moisture inclusion in the cooling system.

Measurement result

Symptoms	Cause	Diagnosis	Corrective action
During operation, the pressure at the low pressure side becomes vacuum or normal.	Moisture in the cooling system is frozen at the expansion valve. The refrigerant does not circulate temporarily. After ice is melted, normal operation is recovered.	• The cooler drier is over-saturated. • Moisture of the cooling system is frozen at the expansion valve and it blocks circulation of the refrigerant gas.	1. Replace the cooler dryer. 2. Remove moisture in the cycle by repeating air release. 3. Inject appropriate level of new refrigerant gas.

Captions in illustration

*a	Low pressure side
*b	High pressure side

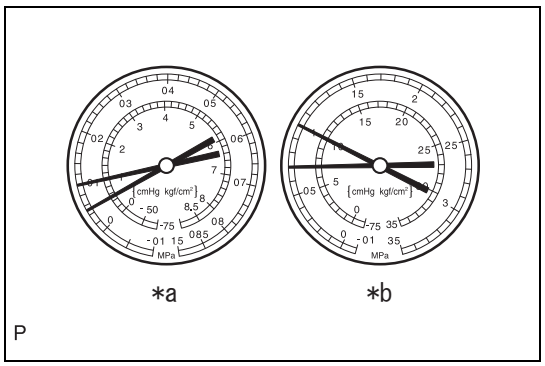

(e)Check the gauge value in [*2].

AC

Measurement result

Symptoms	Cause	Diagnosis	Corrective action
• Both high and low pressure sides are low. • Cooling performance is not sufficient.	A part of the cooling system has gas leak.	• Refrigerant gas is insufficient. • Leak of refrigerant gas	• Check for gas leak. Repair it if necessary. • If the pressure value is close to 0 when connected to the gauge, check for the leak area. After repair, perform vacuuming. • Inject appropriate level of new refrigerant gas.

Captions in illustration

*a	Low pressure side
*b	High pressure side

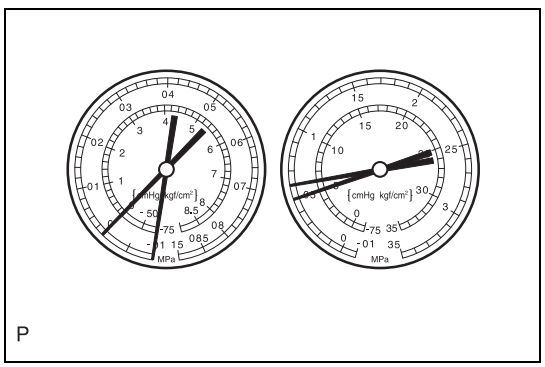

(f) Check the gauge value in [*2].

Measurement result

Symptoms	Cause	Diagnosis	Corrective action
• Both high and low pressure sides are low. • The pipe connected from the cooler condenser to the A/C unit has frost.	Dust in the cooler condenser core blocks flow of refrigerant.	Clogged cooler condenser core	Replace the cooler condenser ASSY.

Captions in illustration

*a	Low pressure side
*b	High pressure side

(g)Check the gauge value in [*2].

NOTE:

The gauge reading indicates no circulation of refrigerant gas.

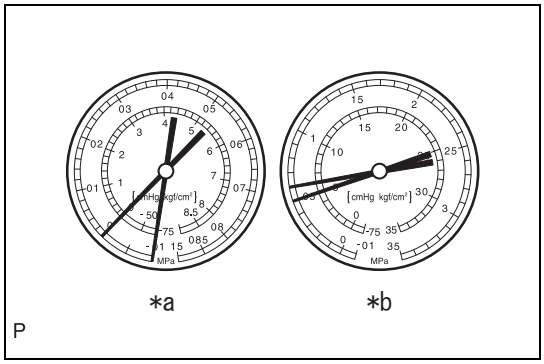

Measurement result

Symptoms	Cause	Diagnosis	Corrective action
• The pressure at the low pressure side shows vacuum and the pressure at the high pressure side shows very low pressure. • Pipes before and after the cooler condenser core or cooler expansion valve have frost or condensation.	• Flow of the refrigerant gas is blocked by moisture or dust of the cooling system. • Flow of the refrigerant gas is blocked by leak of the refrigerant gas from the cooler expansion valve.	Refrigerant gas does not circulate.	1. Check the cooler expansion valve. 2. Remove dust in the cooler expansion valve with an air gun. 3. Replace the cooler condenser core. 4. After vacuuming, inject new refrigerant gas to the appropriate level. 5. If leak of the refrigerant gas from the cooler expansion valve is found, replace the cooler expansion valve.

AC

Captions in illustration

*a	Low pressure side
*b	High pressure side

(h)Check the gauge value in [*2].

NOTE:

The gauge reading indicates excessive refrigerant gas or insufficient cooling of the cooler condenser core.

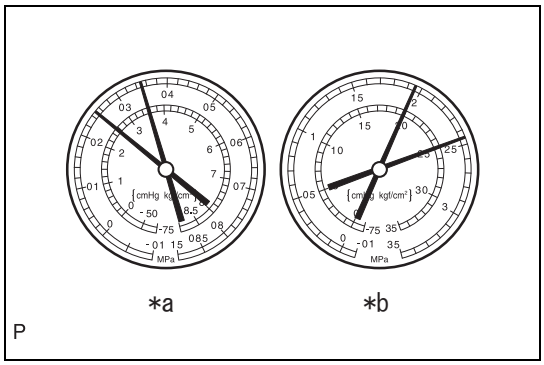

Measurement result

Symptoms	Cause	Diagnosis	Corrective action
Both high and low pressure sides are too high.	• Excessive refrigerant • Cooling of the cooler condenser core is insufficient.	• Excessive refrigerant • Cooling malfunction of cooler condenser core	1. Clean the cooler condenser core fin. 2. Check operation of the condenser fan motor. 3. When 1 and 2 are normal, check the refrigerant level and inject the refrigerant to the appropriate level.

Captions in illustration

*a	Low pressure side
*b	High pressure side

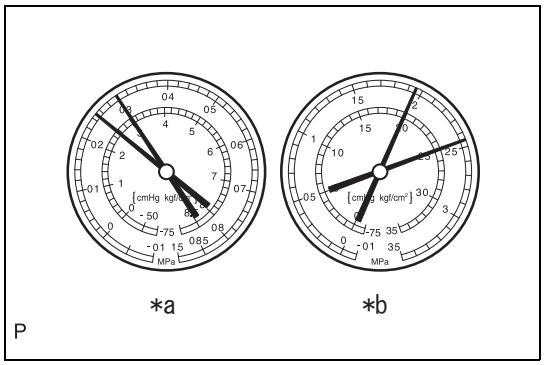

(i) Check the gauge value in [*2].
NOTE:
The gauge reading indicates air inclusion in the refrigerant system.

Measurement result

Symptoms	Cause	Diagnosis	Corrective action
• Both high and low pressure sides are too high. • The low pressure pipe is too hot to be touched.	Air inside the cooling system	• Air is included inside the cooling system. • Insufficient vacuuming	1. Check if the compressor oil is contaminated or insufficient. 2. After vacuuming, inject new refrigerant gas.

Captions in illustration

*a	Low pressure side
*b	High pressure side

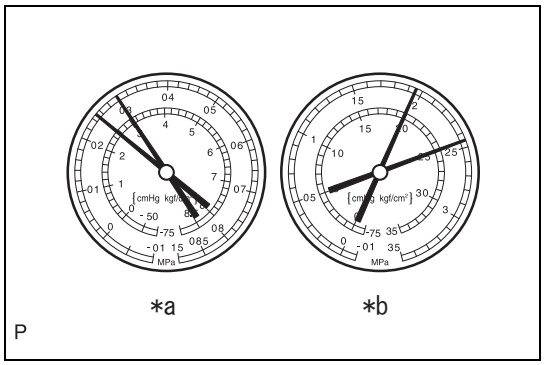

(j) Check the gauge value in [*2].
NOTE:
The gauge reading indicates improper operation of the cooler expansion valve.

Measurement result

Symptoms	Cause	Diagnosis	Corrective action
• Both high and low pressure sides are too high. • The low pressure side has frost or condensation.	Problems on cooler expansion valve	• Excessive refrigerant of low pressure pipe • Excessive opening of cooler expansion valve	Replace the cooler expansion valve.

Captions in illustration

*a	Low pressure side
*b	High pressure side

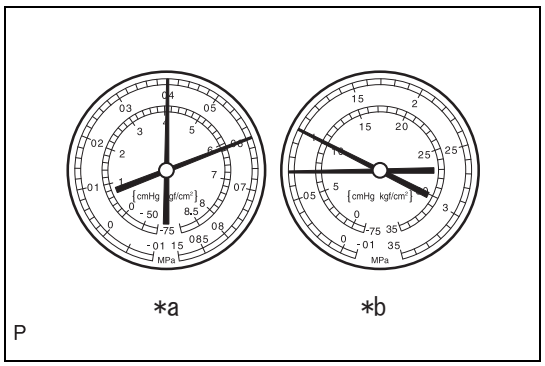

(k) Check the gauge value in [*2].
NOTE:
The gauge reading indicates improper compression of the compressor ASSY (with pulley).

AC

Measurement result

Symptoms	Cause	Diagnosis	Corrective action
• Both high and low pressure sides are too high. • Pressure of the high pressure side is too low.	Leak in compressor ASSY (with pulley)	• Poor compression • Leak from valve or damage to sliding part • Improper operation of pulley limiter or control valve	Repair or replace the compressor ASSY (with pulley).

Captions in illustration

*a	Low pressure side
*b	High pressure side

NOTE:

- The gauge reading indicates improper compression of the compressor ASSY (with pulley).
- When there is no change in the pressure at the low and high pressure side, the compressor ASSY (with pulley) is not discharging and the pulley limiter is activated.

3. Cooler condenser ASSY
   (1) If the cooler condenser ASSY fin is contaminated, clean it with water and dry it with compressor air.
   CAUTION:
   Do not damage the fin of the cooler condenser ASSY.
   (2) If the fin of the cooler condenser ASSY is bent, correct the fin straight with a screwdriver or pliers.
4. Check for refrigerant gas leak
   (1) Using a halogen leak detector, check the pipe joints for leaks.
   (2) If gas leak is found at joints of pipes, check the torque at the joints.

Parts location

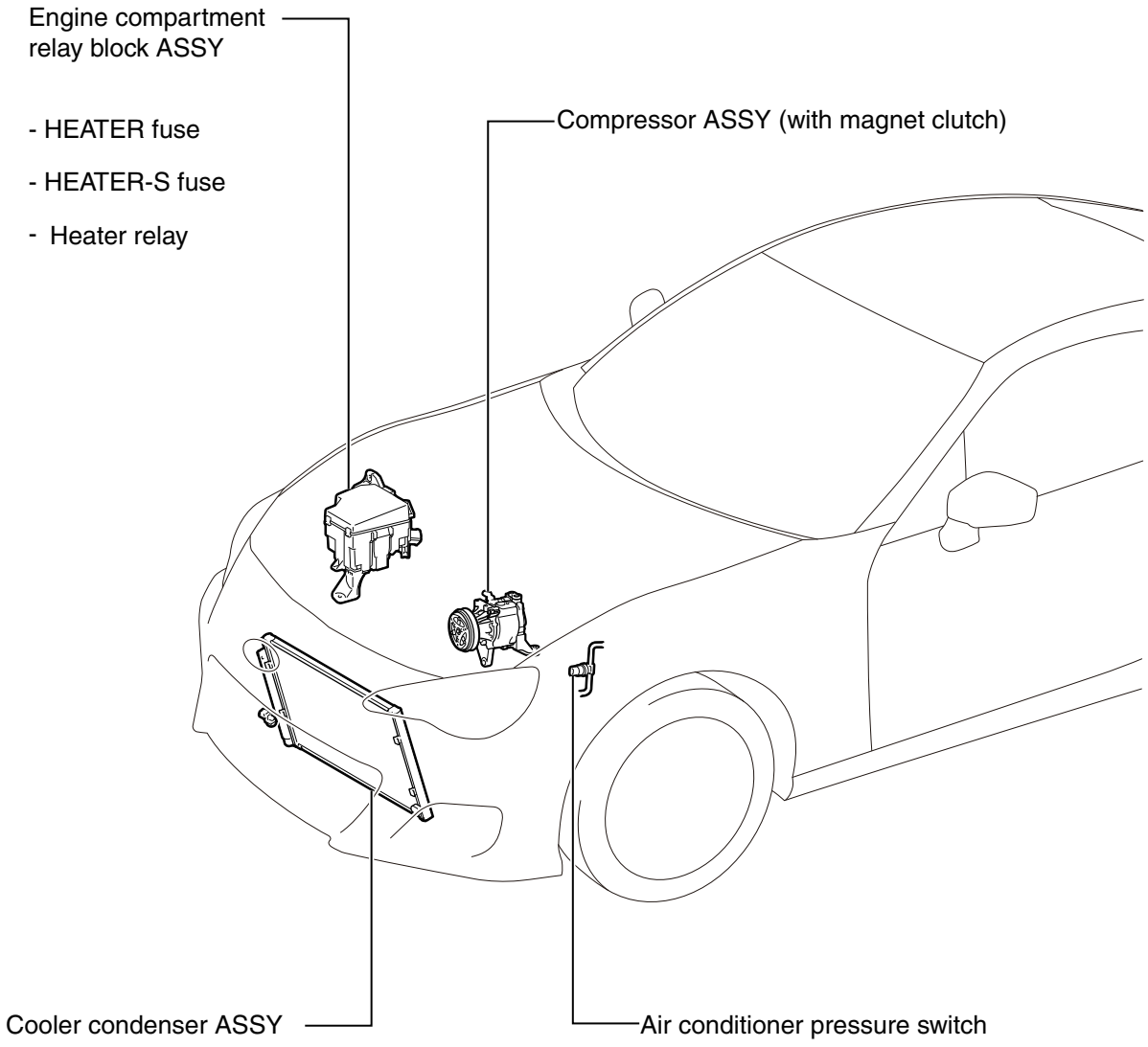

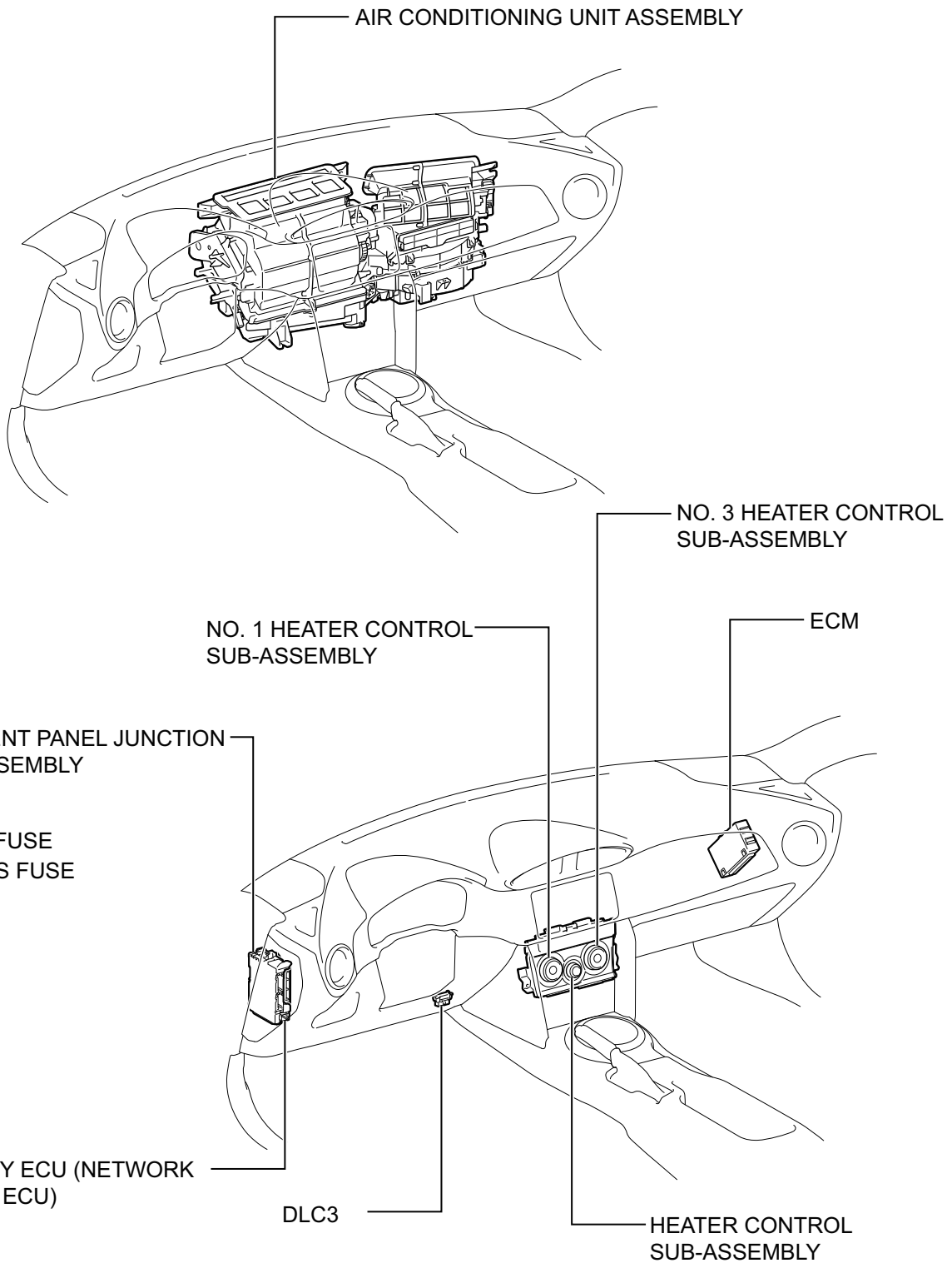
AIR CONDITIONING UNIT ASSEMBLY
NO. 3 HEATER CONTROL SUB-ASSEMBLY
NO. 1 HEATER CONTROL SUB-ASSEMBLY
ECM
INSTRUMENT PANEL JUNCTION BLOCK ASSEMBLY
- HEATER FUSE
- HEATER-S FUSE
MAIN BODY ECU (NETWORK GATEWAY ECU)
DLC3
HEATER CONTROL SUB-ASSEMBLY
AC-03225

AC

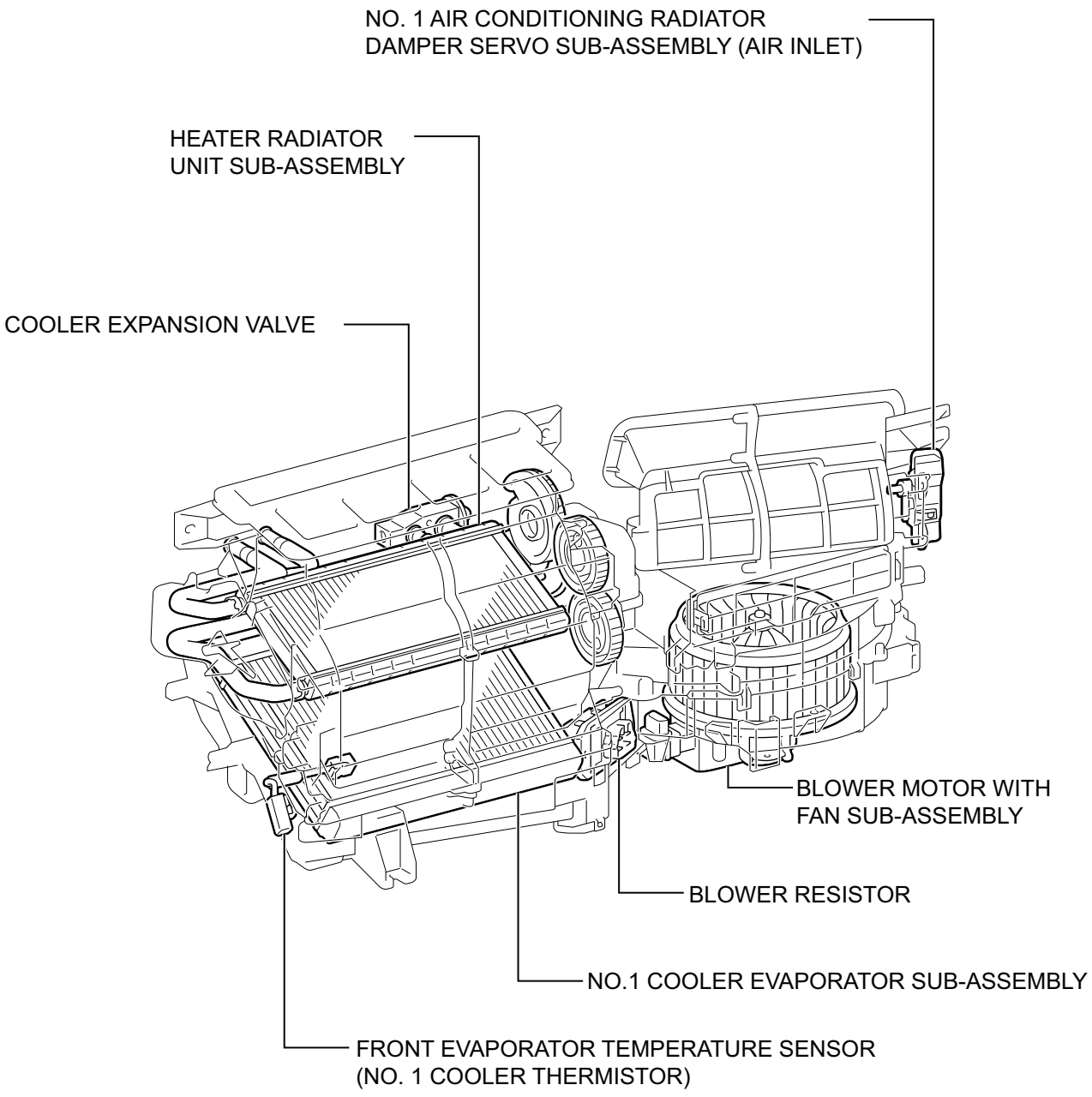
NO. 1 AIR CONDITIONING RADIATOR
DAMPER SERVO SUB-ASSEMBLY (AIR INLET)
HEATER RADIATOR
UNIT SUB-ASSEMBLY
COOLER EXPANSION VALVE
BLOWER MOTOR WITH
FAN SUB-ASSEMBLY
BLOWER RESISTOR
NO.1 COOLER EVAPORATOR SUB-ASSEMBLY
FRONT EVAPORATOR TEMPERATURE SENSOR
(NO. 1 COOLER THERMISTOR)
AC-03226

AC

Symptom table

Manual A/C

Symptoms	Inspection items	Reference pages
A/C system does not operate at all.	Fuse [HEATER (50 A, HEATER (10 A), HEATER-S)]	AC - 72
	Wire harness and connector	-
	Heater control SUB-ASSY	AC - 179
	Heater control SUB-ASSY NO.1	AC - 180
	Heater control SUB-ASSY NO.3	AC - 179
	CAN communication system	AC - 80
	Main body ECM	AC - 80
Switch operation is not accepted.	Heater control SUB-ASSY	AC - 179
	Heater control SUB-ASSY NO.1	AC - 180
	Heater control SUB-ASSY NO.3	AC - 179
	Wire harness and connector	-
Blower motor (with fan) does not rotate.	Blower motor SUB-ASSY (with fan)	AC - 81
	Heater control SUB-ASSY	AC - 179
	Blower motor circuit	AC - 81
	Blower resistor	AC - 141
Blower motor (with fan) speed does not change.	Heater control SUB-ASSY	AC - 179
	Blower motor circuit	AC - 81
	Blower resistor	AC - 141
Difficult cooling	Check of refrigerant level	AC - 64
	Check of refrigerant pressure	AC - 66
	Cooler expansion valve	-
	Cooler compressor ASSY	AC - 148
	Main body ECM	AC - 80
Cold air not emitted	Check of refrigerant level	AC - 64
	Check of refrigerant pressure	AC - 66
	Heater control SUB-ASSY NO.3	AC - 179
	Air conditioner pressure switch circuit	AC - 168
	Compressor ASSY (with pulley)	AC - 148
	Cooler expansion valve	-
	Main body ECM	AC - 25
	Heater relay	AC - 181
	CAN communication system	AC - 80
	Wiring harness and connector	-
Inlet opening is not changed.	Wire harness and connector	-
	Damper servo (FRESH/RECIRC)	AC - 108
	Heater control SUB-ASSY NO.1	AC - 180
Indicator does not illuminate.	Heater control SUB-ASSY	AC - 179
	Heater control SUB-ASSY NO.1	AC - 180
	Heater control SUB-ASSY NO.3	AC - 179
	Wire harness and connector	-
Illumination does not turn on, or does not dim.	Heater control SUB-ASSY	AC - 179
	Heater control SUB-ASSY NO.1	AC - 180
	Heater control SUB-ASSY NO.3	AC - 179
	Wire harness and connector	-

AC

Description of functions

1. Communication system function
   (1) The heater & air conditioner system sends and receives signals with computers and devices through the CAN communication system.

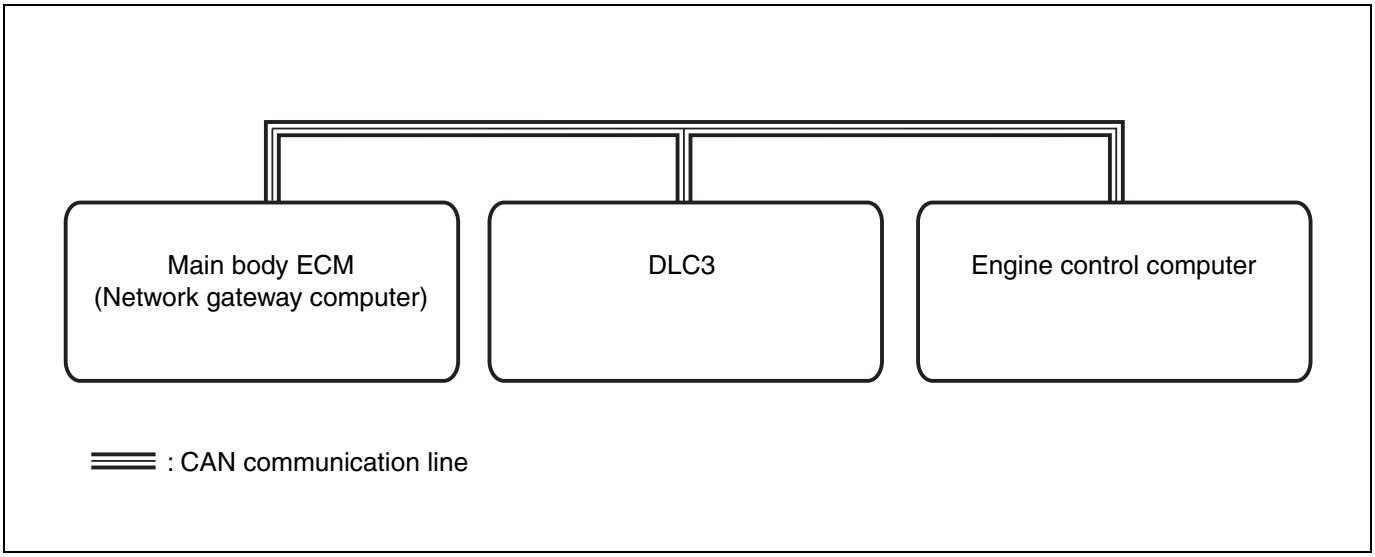

2. Diagnosis function

(1) Function of diagnosis tool SSM4

(a)For the heater & air conditioner system, items in the table below can be checked by connecting SSM4.

Check details	Contents
[Engine Control System] →[Data monitor]	ECM data can be checked, recorded or reproduced.

How to troubleshoot

1	Bring in the car

Next

AC

2	Interview and phenomenon check

(1) Interview and phenomenon check (Refer to AC - 78)

Next

3	Preliminary inspection

(1) Inspect the battery voltage.

Standard value: 11 to 14V

(2) According to the parts arrangement drawing and/or circuit figure, check the blown fuse, broken wire harness, short circuit, and/or improper connection that can be inspected visually.

Next

4	Inspection of CAN communication system

(1) Check CAN communication system. (Refer to NW - 30)

Result

Result	Go to
Functioning properly	A
Not functioning properly	B

B → Go to the CAN communication system section (Refer to NW - 30)

A

5	Symptom table

(1) Symptom table (Refer to AC - 75)

Result

Result	Go to
Not applicable to the symptom table.	A
Applicable to the symptom table.	B

B → Go to Step 7.

A

6	Perform troubleshooting with the method below based on malfunctions.

(1) Data monitor / active test (Refer to AC - 80)
  (a) Data monitor (SSM4)
(2) ECM terminal arrangement (Refer to AC - 80)

Next

7	Adjustment, repair, or replacement

Next

8	Confirmation test

Next

Complete

Check list for interview

Heater & Air Conditioner System Diagnosis Checklist for Interview

Year/date of vehicle bring-in: Year Month Date

Name		Registration No.	First registration: Year Month Date
		Vehicle model	Frame No.
Front	Engineer	Engine type	Odometer reading
Customer specified content			

Date when trouble occurred (from when)	Year Month Date Time
Frequency of occurrence	☐ Continuous ☐ Sometimes (times/day, times/month)
Condition of trouble occurrence	

Weather	☐ Fine ☐ Cloudy ☐ Rainy ☐ Snowy ☐ Other ( )	Temperature	Approx. ( ) °C(°F)
Road	Inner city Suburbs Highway Others ( )	☐ Paved road ☐ Unpaved road	

DTC check	1st output code	
	2nd output code	

Trouble symptom	Airflow control failure	☐ Blower motor does not rotate. ☐ Blower motor does not change speeds. (always fast, always mid-speed, always slow)
	Temperature control failure	☐ Compartment temperature does not lower. ☐ Compartment temperature does not rise. ☐ Slow response
	Inlet opening control failure	☐ FRESH/RECIRC does not change. (always RECIRC, always FRESH)
	Vent control failure	☐ Unable to switch vents. ☐ Cannot be entered into desired mode.
	Others	

AC-03141

AC

Circuit figure

With cooler

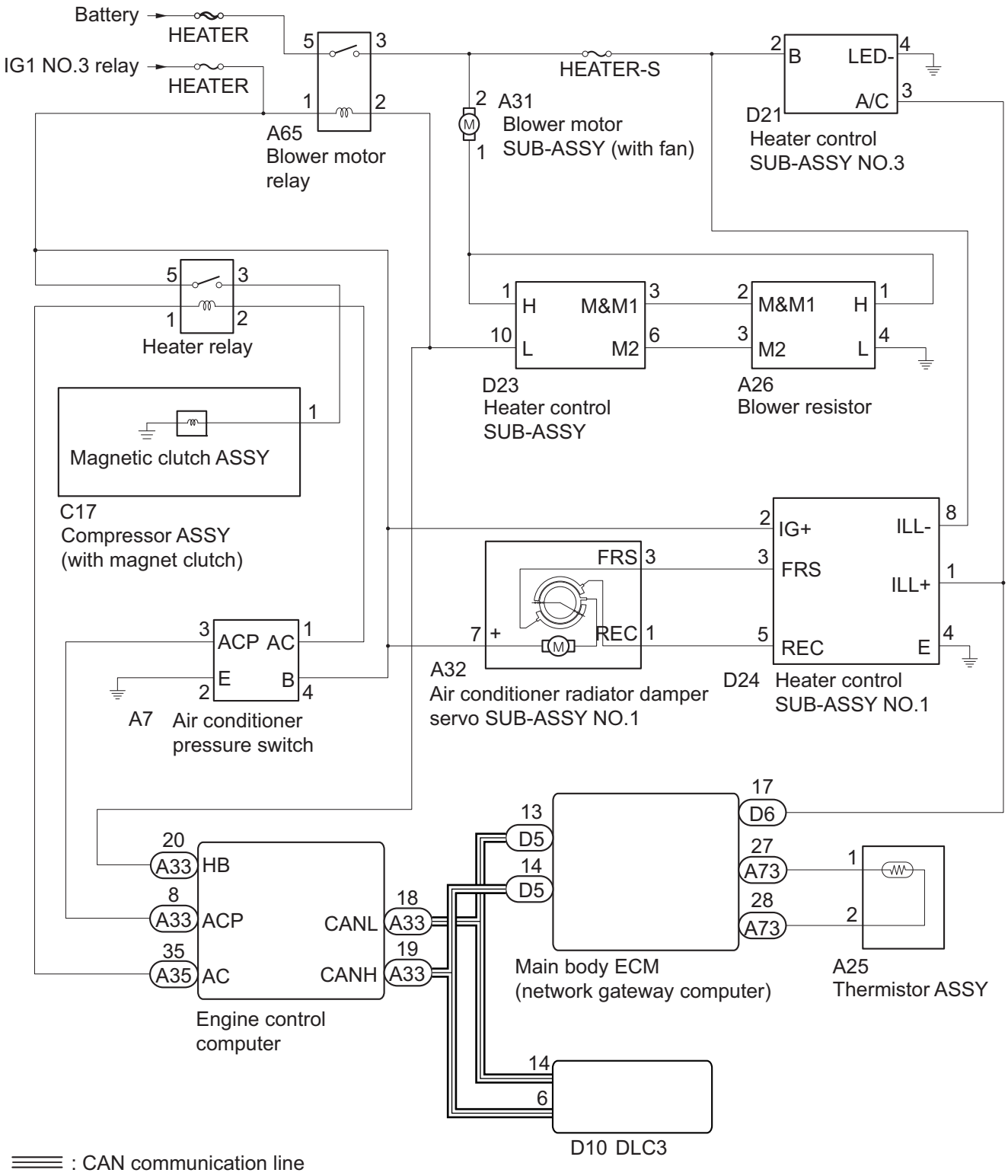

AC

ECM terminal arrangement

1. Engine control computer

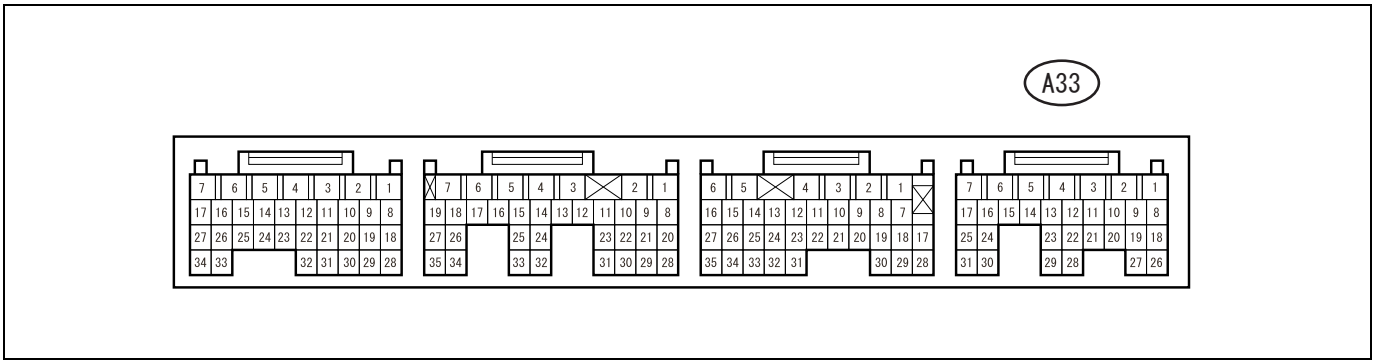

Standard value

Connector F42

Terminal No. (Terminal symbol)	Input/ Output	Item	Measuring conditions	Standard value
A33-8 ←→chassis ground	Input	Voltage	When refrigerant pressure is normal	10 to 16 V
			When refrigerant pressure is abnormal Less than 0.196 MPa {2.0 kgf/cm^2} or refrigerant pressure of 3.14 MPa {32 kgf/cm^2} or more	Less than 1 V
A33-18 ←→chassis ground	Input	Wave-form	IG ON	Pulse generation
A33-19 ←→chassis ground	Input	Wave-form	IG ON	Pulse generation

Data monitor / active test

1. Data monitor (SSM4)
   (1) On the SSM4, navigate to the [Data monitor] display, and check the computer data.

SSM4 screen: [Each System] →[Body Control] →[Data monitor]

Item name [Symbol]	Description/display range	Normal value	Remarks
[evaporator sensor voltage]	Evaporator ambient temperature is displayed. Display range: 0 to 21.4°C	• In open circuit: (0°C) is displayed. • In short-circuit: (21.4°C) is displayed.	Cooler thermistor NO.1 (after-evaporator sensor) system
[A/C SW Input]	Air conditioner switch input Display: ON - OFF	Display: ON - OFF	The air conditioner signal system may have an error, if any.
[A/C SW Output]	Air conditioner switch output Display: ON - OFF	Display: ON - OFF	The air conditioner signal system may have an error, if any.

SSM4 screen: [Each System] →[Engine Control System] →[Data monitor]

Item name [Symbol]	Description/display range	Normal value	Remarks
[A/C Mid Pressure Switch]	Pressure switch status is displayed. Display: ON - OFF	ON: Pressure switch ON OFF: Pressure switch OFF	The pressure switch system or refrigerant quantity may be abnormal, if any.
[A/C Switch]	Air conditioner switch status is displayed. Display: ON - OFF	ON: Air conditioner ON OFF: Air conditioner OFF	The air conditioner signal system may have an error, if any.
[A/C Compressor Signal]	The magnet clutch status is displayed. Display: ON - OFF	ON: Magnet clutch ON OFF: Magnet clutch OFF	The magnet clutch system may be abnormal, if any.
[Air Conditioner FB Val]	The ISC valve status is displayed. Display range: -150 to 149.99	-	-

2. Active test
   (1) Using SSM4, display the [Active Test] screen according to the screen and perform the system operation check.

SSM4 screen: [Each System] →[Engine Control System] →[Active Test]

Item name	Drive
[A/C Compressor Relay]	Magnet clutch operation ON - OFF

AC

Blower motor circuit

Circuit description

When the heater control SUB-ASSY is operated from 0 →1 or more, the blower motor relay turns ON. The power is supplied to the blower motor SUB-ASSY (with fan) and it starts rotating. Speed of the blower motor SUB-ASSY (with fan) is controlled by operating the heater control SUB-ASSY and switching the ground - blower register circuits.

Circuit figure

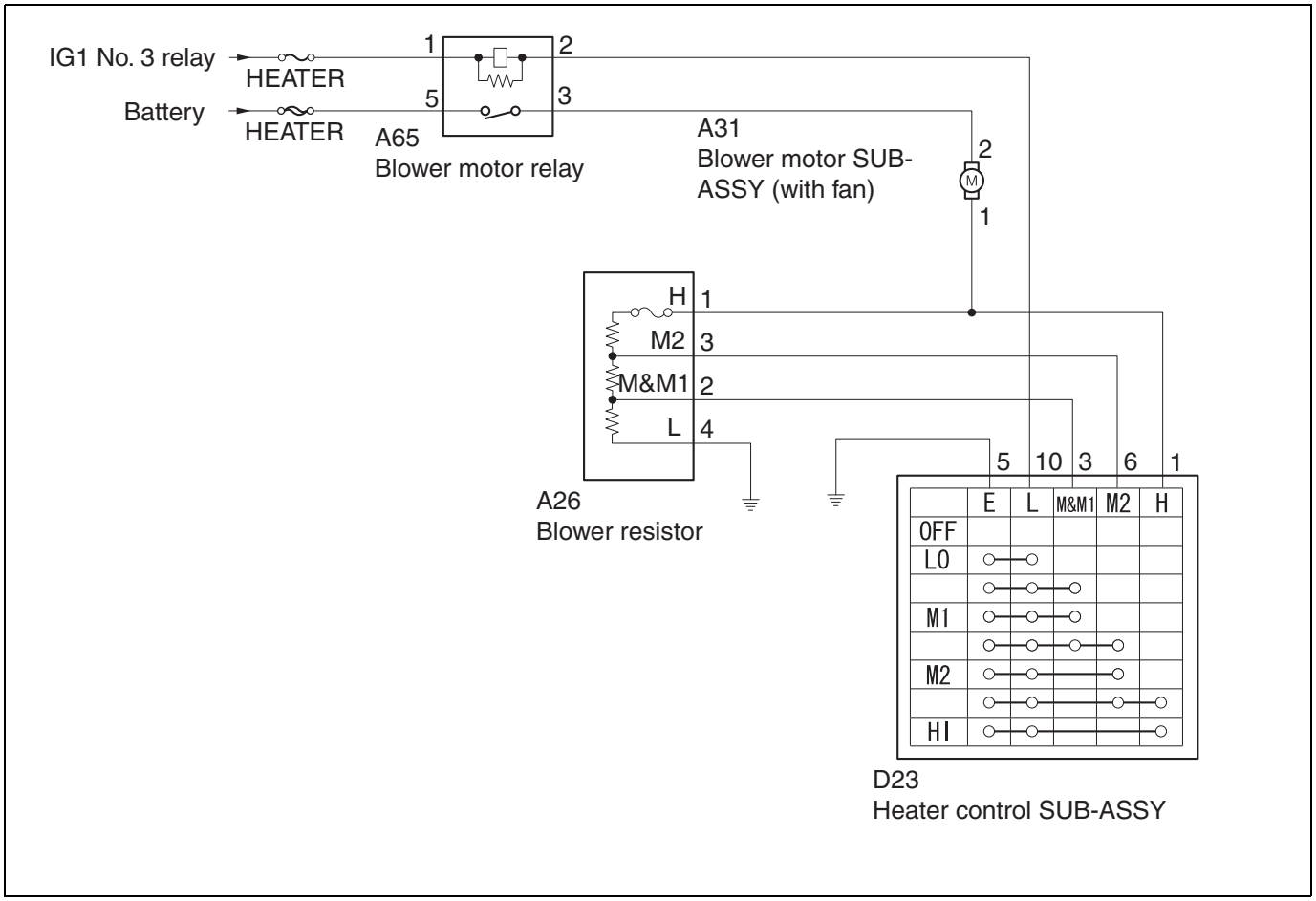

Inspection steps

CAUTION:

Before performing the troubleshooting, check the fuse of this circuit.

1	Unit inspection of blower motor relay

(1) Remove the blower motor relay.

(2) Inspect the individual blower motor relay. (Refer to AC - 181)

NG → Replacement of blower motor relay

OK

2	Unit inspection of blower motor SUB-ASSY (with fan)

(1) Disconnect connector A31 of the blower motor SUB-ASSY (with fan).

(2) Inspect the individual blower motor SUB-ASSY (with fan). (Refer to AC - 139)

AC

NG → Replacement of blower motor SUB-ASSY (with fan) (Refer to AC - 138)

OK

3	Inspection of wire harness and connector (HEATER fuse - blower motor relay)

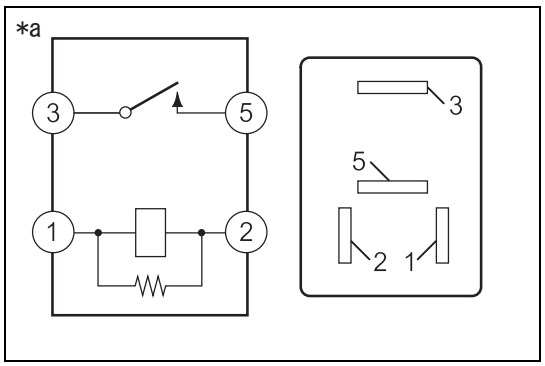

NOTE:
For inspection procedures and precautions, refer to IN - 36.
(1) Remove the blower motor relay.
(2) Measure the voltage between the terminals.
Voltage

Inspection terminals	Inspection conditions	Standard value
5 - Chassis ground	Always	11 to 14 V
1 - Chassis ground	IG ON	11 to 14 V

Captions in illustration

*a	Connector not connected (Blower motor relay)

NG → Repair or replacement of wiring harness or connector

OK

4	Inspection of wire harness and connector (blower motor relay - blower motor SUB-ASSY (with fan))

NOTE:
For inspection procedures and precautions, refer to IN - 36.
(1) Measure the resistance between the terminals.
Resistance (open circuit)

Inspection terminals	Inspection conditions	Standard value
A65-3 - A31-2	Always	Less than 1 Ω

Resistance (short-circuit)

Inspection terminals	Inspection conditions	Standard value
A65-3 - Chassis ground	Always	10 kΩ or more

NG → Repair or replacement of wiring harness or connector

OK

5	Inspection of wire harness and connector (blower motor relay - heater control SUB-ASSY)

NOTE:
For inspection procedures and precautions, refer to IN - 36.
(1) Disconnect connector D23 from the heater control SUB-ASSY.
(2) Measure the resistance between the terminals.

AC

Resistance (open circuit)

Inspection terminals	Inspection conditions	Standard value
A65-2 - D23-10(L)	Always	Less than 1 Ω

Resistance (short-circuit)

Inspection terminals	Inspection conditions	Standard value
A65-2 - Chassis ground	Always	10 KΩ or more

NG → Repair or replacement of wiring harness or connector

OK

6	Inspection of wire harness and connector (blower motor SUB-ASSY (with fan) - heater control SUB-ASSY)

NOTE:
For inspection procedures and precautions, refer to IN - 36.
(1) Measure the resistance between the terminals.
Resistance (open circuit)

Inspection terminals	Inspection conditions	Standard value
A31-1 - D23-1(H)	Always	Less than 1 Ω

NG → Repair or replacement of wiring harness or connector

OK

7	Inspection of wire harness and connector (heater control SUB-ASSY - chassis ground)

NOTE:
For inspection procedures and precautions, refer to IN - 36.
(1) Measure the resistance between the terminals.
Resistance (open circuit)

Inspection terminals	Inspection conditions	Standard value
D23-5 (E) - Chassis ground	Always	Less than 1 Ω

NG → Repair or replacement of wiring harness or connector

OK

8	Inspection of wire harness and connector (heater control SUB-ASSY - blower register)

NOTE:
For inspection procedures and precautions, refer to IN - 36.
(1) Disconnect connector A26 of the register.
(2) Measure the resistance between the terminals.

AC

Resistance (open circuit)

Inspection terminals	Inspection conditions	Standard value
D23-3(M&M1) - A26-2(M&M1)	Always	Less than 1 Ω
D23-6(M2) - A26-3(M2)	Always	Less than 1 Ω

Resistance (short-circuit)

Inspection terminals	Inspection conditions	Standard value
D23-3(M&M1) - Chassis ground	Always	10 KΩ or more
D23-6 (M2) - Chassis ground	Always	10 KΩ or more

NG → Repair or replacement of wiring harness or connector

OK

9	Inspection of wire harness and connector (blower motor SUB-ASSY (with fan) - blower register)

NOTE:
For inspection procedures and precautions, refer to IN - 36.
(1) Measure the resistance between the terminals.
Resistance (open circuit)

Inspection terminals	Inspection conditions	Standard value
A31-1 - A26-1(H)	Always	Less than 1 Ω

NG → Repair or replacement of wiring harness or connector

AC

OK

10	Inspection of wire harness and connector (blower register - chassis ground)

NOTE:
For inspection procedures and precautions, refer to IN - 36.
(1) Measure the resistance between the terminals.
Resistance (open circuit)

Inspection terminals	Inspection conditions	Standard value
A26-4 (L) - Chassis ground	Always	Less than 1 Ω

NG → Repair or replacement of wiring harness or connector

OK

11	Unit inspection of blower resistor

(1) Inspect the individual blower register. (Refer to AC - 141)

NG → Replacement of blower register (Refer to AC - 140)

OK

12	Unit inspection of heater control SUB-ASSY (blower switch)

(1) Inspect the individual heater control SUB-ASSY (blower switch). (Refer to AC - 176)

NG → Replacement of heater control SUB-ASSY (Refer to AC - 176)

OK

Go to related circuit inspection listed in symptom table (Refer to AC - 16).

Magnet clutch relay circuit

Circuit description

The main body ECM (network gateway computer) transmits the magnet clutch ON command to the engine control computer through the CAN communication. The engine control computer operates the heater relay and turns ON the magnet clutch.

Circuit figure

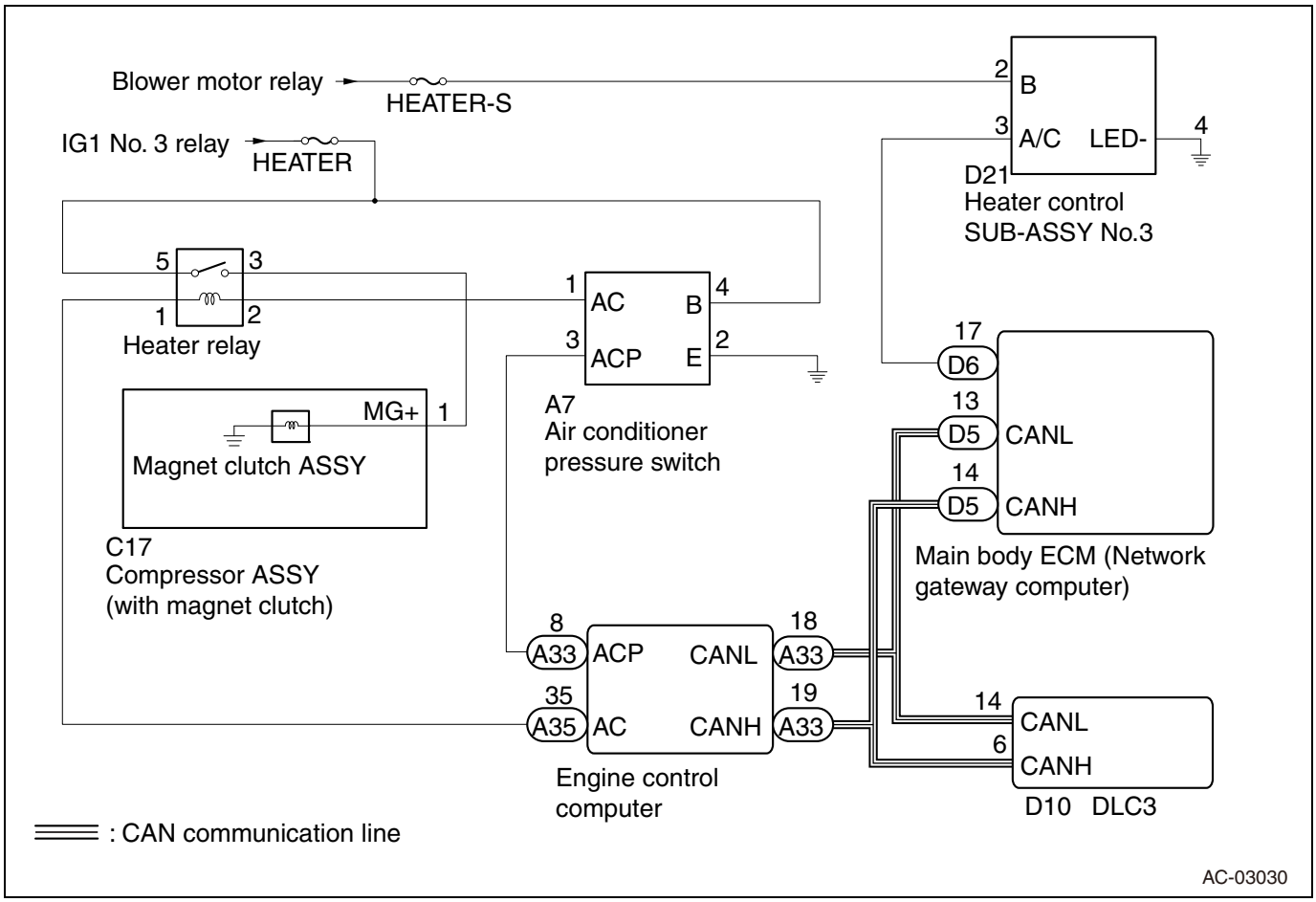

Inspection steps

CAUTION:

- Before performing the troubleshooting, check the fuse of this circuit.

- The heater & air conditioner system uses the CAN communication system. First, perform a “Communication function inspection”, following “How to troubleshoot” and after checking for any malfunction in the communication system, you can proceed with troubleshooting.
- This inspection may be affected by abnormality of the engine control computer and the main body ECM (network gateway computer). Before inspection, check the diagnostic codes of “engine” and “main body” to make sure that they are normal.

1	Reading of SSM4 data (air conditioner signal)

(1) Using the SSM4, follow the screen display and check the [Data monitor].
Criteria: The display changes according to operation of the air conditioner switch.

SSM4 screen: [Each System] →[Engine Control System] →[Data monitor]

Item name	Description/display range	Normal value	Remarks
[A/C Switch]	Air conditioner switch status is displayed. Display: ON - OFF	ON: Air conditioner ON OFF: Air conditioner OFF	The air conditioner signal system may have an error, if any.

Result

Result	Go to
The display does not change according to operation of the air conditioner switch.	A
The display changes according to operation of the air conditioner switch.	B

B → Go to Step 5.

A

AC

2	Inspection of wire harness and connector (heater control SUB-ASSY NO.3 - power supply system)

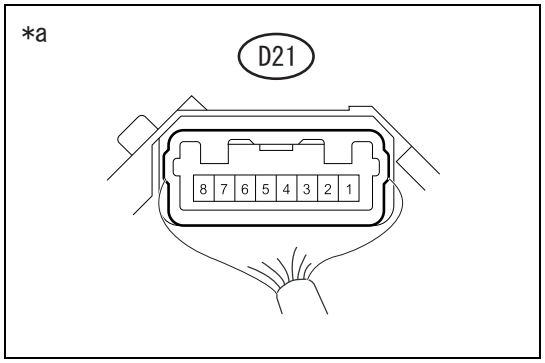

NOTE:
For inspection procedures and precautions, refer to IN - 36.
(1) Inspect the voltage between connector terminals at the vehicle wire harness side.

Voltage

Inspection terminals	Inspection conditions	Standard value
D21-2 (B) - Chassis ground	IG ON Blower switch LO	10 to 16 V

Captions in illustration

*a	Connector connected (Connector connected to heater control SUB-ASSY NO.3)

NG → Repair or replacement of wiring harness or connector

OK

3	Unit inspection of heater control SUB-ASSY NO.3

(1) Inspect the individual heater control SUB-ASSY NO.3. (Refer to AC - 181)

NG → Replacement of heater control SUB-ASSY NO.3 (Refer to AC - 173)

OK

4	Inspection of wire harness and connector (heater control SUB-ASSY NO.3 - main body ECM (network gateway computer))

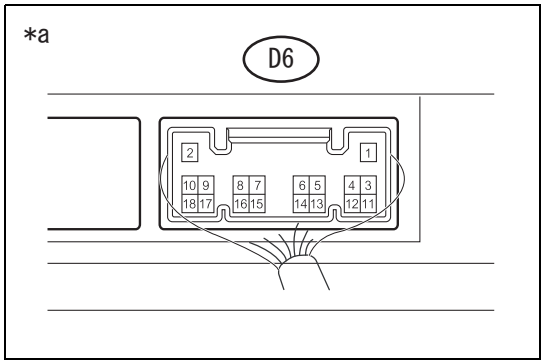

NOTE:
For inspection procedures and precautions, refer to IN - 36.

(1) Inspect the voltage between connector terminals at the vehicle wire harness side.

Voltage

Inspection terminals	Inspection conditions	Standard value
D6-17 - Chassis ground	IG ON Blower switch LO A/C ON	10 to 16 V

Captions in illustration

*a	Connector connected (Connector connected to main body ECM (network gateway computer))

NG → Repair or replacement of wiring harness or connector

OK

5	Reading of SSM4 data

(1) Using SSM4, inspect the current data display according to the screen.
Criteria: The display changes according to operation of the air conditioner switch.

SSM4 screen: [Each System] →[Engine Control System] →[Data monitor]

Item name	Description/display range	Normal value	Remarks
[A/C Mid Pressure Switch]	Pressure switch status is displayed. Display: ON - OFF	ON: Pressure switch ON OFF: Pressure switch OFF	The pressure switch system or refrigerant quantity may be abnormal, if any.

NG → To refrigerant HFC-134a [R134a] - Function inspection (Refer to AC - 64)

OK

6	Unit inspection of heater relay

(1) Inspect the individual heater relay. (Refer to AC - 181)

AC

NG → Replacement of heater relay

OK

7	Inspection of wire harness and connector (heater relay - engine control computer)

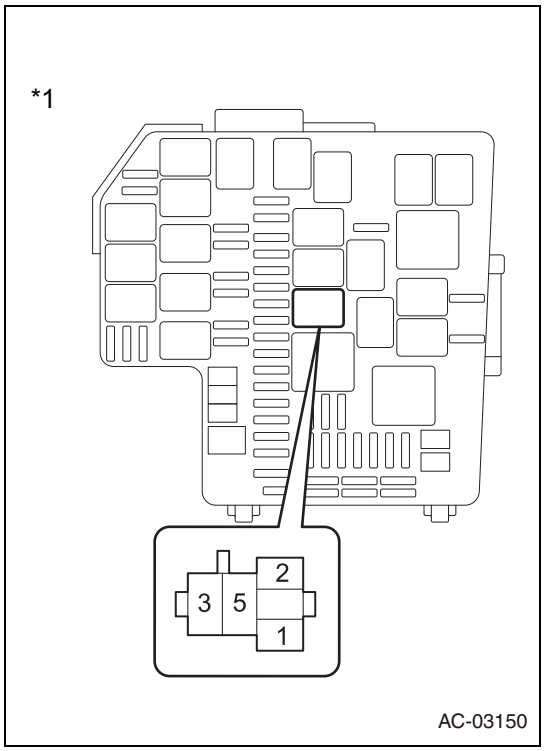

NOTE:
For inspection procedures and precautions, refer to IN - 36.
(1) Remove the heater relay from the engine compartment relay block.
(2) Disconnect connector A35 from the engine control computer.
(3) Inspect the resistance between connector terminals at the vehicle wire harness side.

Resistance

Inspection terminals	Inspection conditions	Standard value
1 - A35-35(AC)	Always	Less than 1 Ω
1 - Chassis ground	Always	10 kΩ or more

Captions in illustration

*1	Engine compartment relay block

NG → Repair or replacement of wiring harness or connector

OK

AC

8	Inspection of wire harness and connector (heater relay - power supply system)

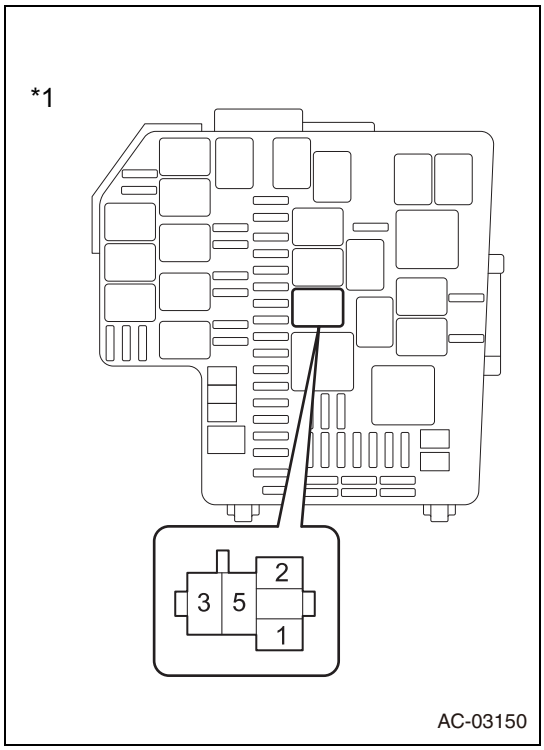

NOTE:
For inspection procedures and precautions, refer to IN - 36.
(1) Inspect the voltage between connector terminals at the vehicle wire harness side.

Voltage

Inspection terminals	Inspection conditions	Standard value
5 - Chassis ground	IG OFF	Less than 1 V
	IG ON	11 to 14V

Captions in illustration

*1	Engine compartment relay block

NG → Repair or replacement of wiring harness or connector

OK

9	Inspection of wire harness and connector (heater relay - air conditioner pressure switch)

NOTE:
For inspection procedures and precautions, refer to IN - 36.
(1) Disconnect connector A7 from the air conditioner pressure switch.
(2) Inspect the resistance between connector terminals at the vehicle wire harness side.

Resistance

Inspection terminals	Inspection conditions	Standard value
2 - A7-1	Always	Less than 1 Ω
2 - Chassis ground	Always	10 kΩ or more

NG → Repair or replacement of wiring harness or connector

OK

10	Unit inspection of compressor ASSY (with magnet clutch)

(1) Inspect the individual compressor ASSY (with magnet clutch). (Refer to AC - 148)

NG → Replacement of compressor ASSY (with magnet clutch)

OK

AC

11	Inspection of wire harness and connector (compressor ASSY (with magnet clutch) - heater relay)

NOTE:
For inspection procedures and precautions, refer to IN - 36.
(1) Inspect the resistance between connector terminals at the vehicle wire harness side.
Resistance

Inspection terminals	Inspection conditions	Standard value
C17-1(MG+) - 3	Always	Less than 1 Ω
C17-1 (MG+) - Chassis ground	Always	10 kΩ or more

NG → Repair or replacement of wiring harness or connector

OK

Replacement of the engine control computer (Refer to ES - 669)

Refrigerant HFC-134a [R134a]

Precautions

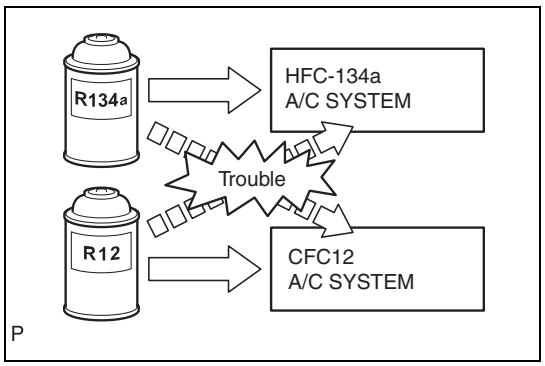

1. Precautions for refrigerant HFC-134a (R134a)
   (1) Compatibility
      (a) The components establishing a refrigerant cycle and the compressor oil have no compatibility between the HFC-134a (R134a) system and the conventional R12 system.
   (2) Refrigerant HFC-134a (R134a)
      (a) Be sure to use HFC-134a (R134a) for the refrigerant.
         CAUTION:
         - The gas is not poisonous or hazardous in normal operation. However, when exposed to fire or high temperature conditions (cigarette, kerosene heater, etc.), it may become hazardous gas.
         - Pay attention to sufficient ventilation and do not work at a closed place.

         NOTE:
         The manifold gauge is specially used for HFC-134a (R134a) to prevent incorrect charge.
   (3) Compressor oil
      (a) Be sure to use ND-OIL8 for the compressor oil.
         NOTE:
         If the compressor oil for R12 is used for a HFC-134a (R134a) system, compressor lock due to poor lubrication or leak of the refrigerant gas due to expansion of rubber part may occur. Reversely, if HFC-134a (R134a) compressor oil is used in a R12 system, the durability of the A/C system will be lowered.
      (b) The compressor oil for HFC-134a (R134a) has high hygroscopic property. If A/C parts are removed, seal them with plug, vinyl tape, etc. from the atmosphere immediately.
      (c) The compressor oil for HFC-134a (R134a) may have adverse effect on acrylic resin. Do not spread the oil.

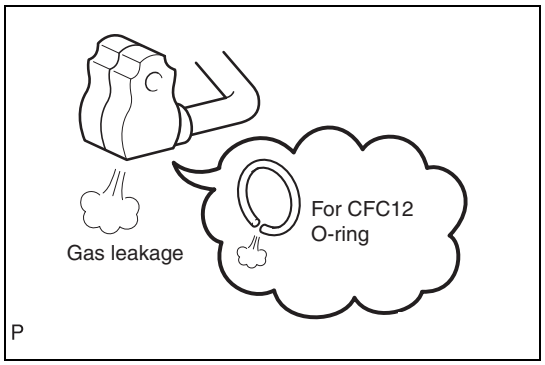

   (4) O-ring
      (a) Be sure to use the O-ring for HFC-134a (R134a).
         NOTE:
         The O-rings for HFC-134a (R134a) and for R12 are different in material and size. Incorrect use may cause the gas leakage.
   (5) Precautions for vacuuming
      (a) For vacuuming, install a solenoid valve adapter on the vacuum pump for R12.
         NOTE:
         If you leave the system as it is after vacuuming without using the solenoid valve adapter, oil (for R12) in the vacuum pump may flow backward, and then into the HFC-134a (R134a) system.
   (6) Check for refrigerant gas leak
      (a) To check for refrigerant gas leak, use an electronic leak detector.
      (b) Check for refrigerant gas leak with IG OFF.
         NOTE:
         - If the check is performed while the engine is running, leak gas is diluted by fan, blower, etc. and it becomes hard to detect a leak.

AC

- If the check is performed while the cooler is on, the refrigerant pressure in the cooler unit is reduced. It inadequately prevents the gas leakage.

2. Precautions for assembly/disassembly
   (1) Action when the refrigerant gas gets into the eyes
      (a)Do not rub eyes with hands or a handkerchief.
      (b)Take treatment from a special eye doctor.
   (2) Precautions for handling of refrigerant gas (service can)
      (a)Do not heat a service can. If a service can is directly heated or put in hot water, the pressure in the can become excessively high, resulting in burst of the can. If it is necessary to heat a service can, use warm water at 40°C or less.
      (b)Do not drop or hit a service can.
      (c)Do not open the high-pressure valve of manifold gauge when the engine is running. If the high pressure valve is opened while the engine is running, reverse flow of the high pressure gas may occur, resulting in burst of the can.
      (d)Do not handle a service can near the face. Be sure to wear protective goggles.

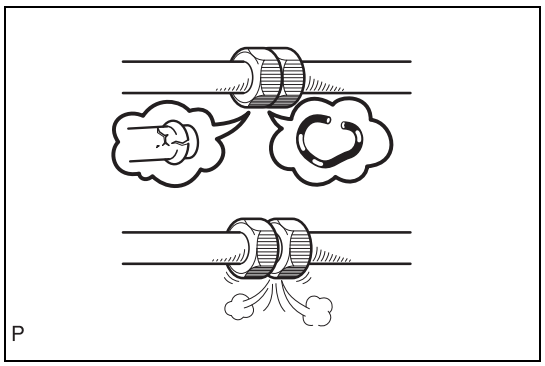
P

   (3) Pipe installation
      (a)Be sure to use a new O-ring.
         NOTE:
         - Be sure to use the O-ring for HFC-134a (R134a).
         - When removing the O-ring, use a soft tool like a toothpick so that a pipe may not be damaged.
      (b)Apply sufficient amount of compressor oil (ND-OIL8) to the O-ring.
      (c)Route the hoses naturally and do not twist or bend them forcibly.
      (d)If foreign matter like lint stays on the O-ring, it may cause leak of the refrigerant gas. Do not use cotton gloves.

Adjustment

1. Discharge of refrigerant HFC-134a (R134a)
   (1) Operate the air conditioner under the conditions below.

AC

Conditions	Contents
Engine speed	Idling
Operation time	3 minutes or more
A/C switch	ON
Blower level	HI
Setting temperature	MAX COOL

      CAUTION:
      If the air conditioner cannot be operated due to lock of the compressor, operation is not required.
   (2) Stop the engine.
   (3) Connect the CFC recovery system,and discharge the refrigerant gas.
      CAUTION:
      When using the CFC recovery system, use it correctly according to the operation manual.
2. Charging refrigerant HFC-134a (R134a)
   (1) Using a vacuum pump, perform vacuuming.
   (2) Charge refrigerant HFC-134a (R134a).
      Standard value
      Refrigerant charge level: 390±50 g {13.76±1.76 oz}
      CAUTION:
      If the cooler compressor is operated without refrigerant, seizure may occur due to poor lubrication. Never operate it before charging of refrigerant.
      NOTE:
      If collected refrigerant gas is reused, the refrigerant gas recovery rate with a CFC recovery system is about 90%. Prepare a service can for refilling in advance.

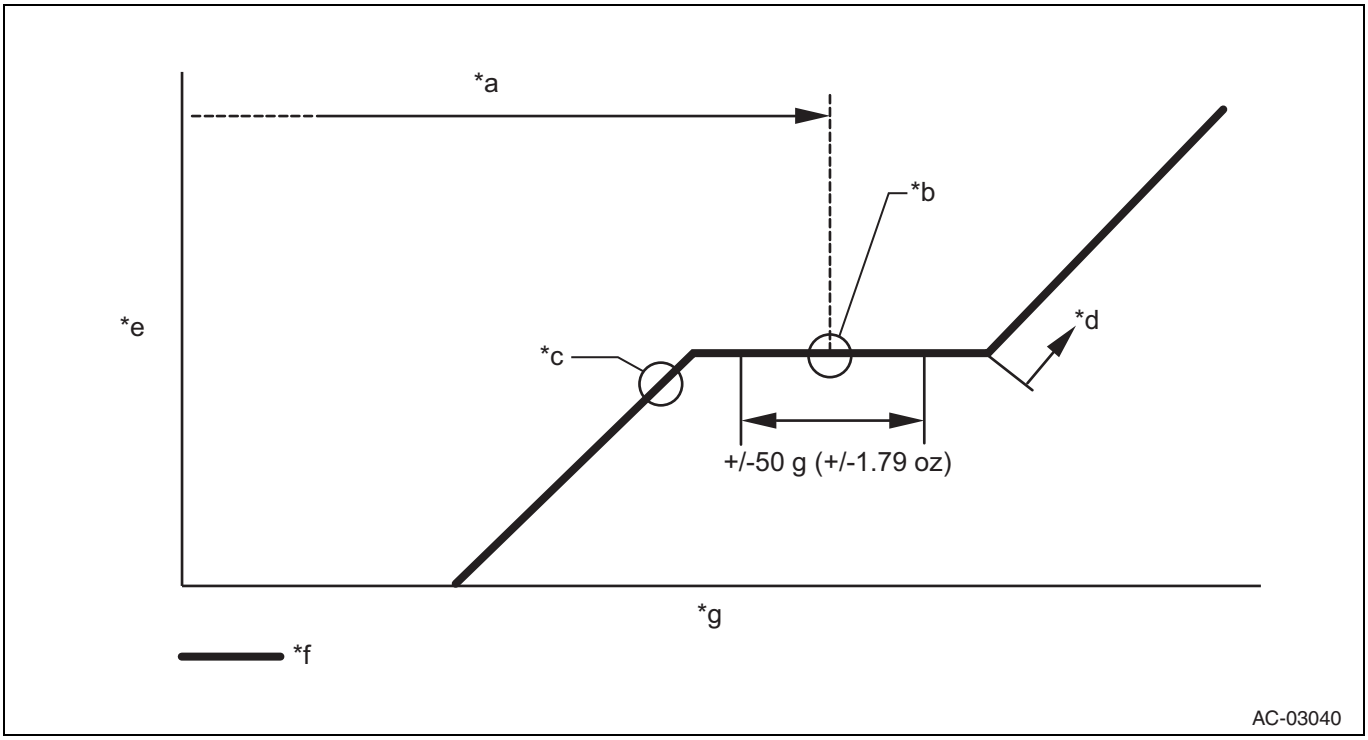

Captions in illustration

*a	Charge level	*b	Center of appropriate values
*c	Bubble disappearing point	*d	Over-charge
*e	Pressure	*f	Sub cool system
*g	Refrigerant level	-	-

3. Engine warm-up
   CAUTION:
   After charging refrigerant, perform break-in operation at 2000 r/min or less for 2 minutes or more.
4. Check for refrigerant gas leak
   (1) After charging refrigerant gas, use an electronic leak detector to check for leak of the refrigerant gas.

Cooler piping

Arrangement drawing

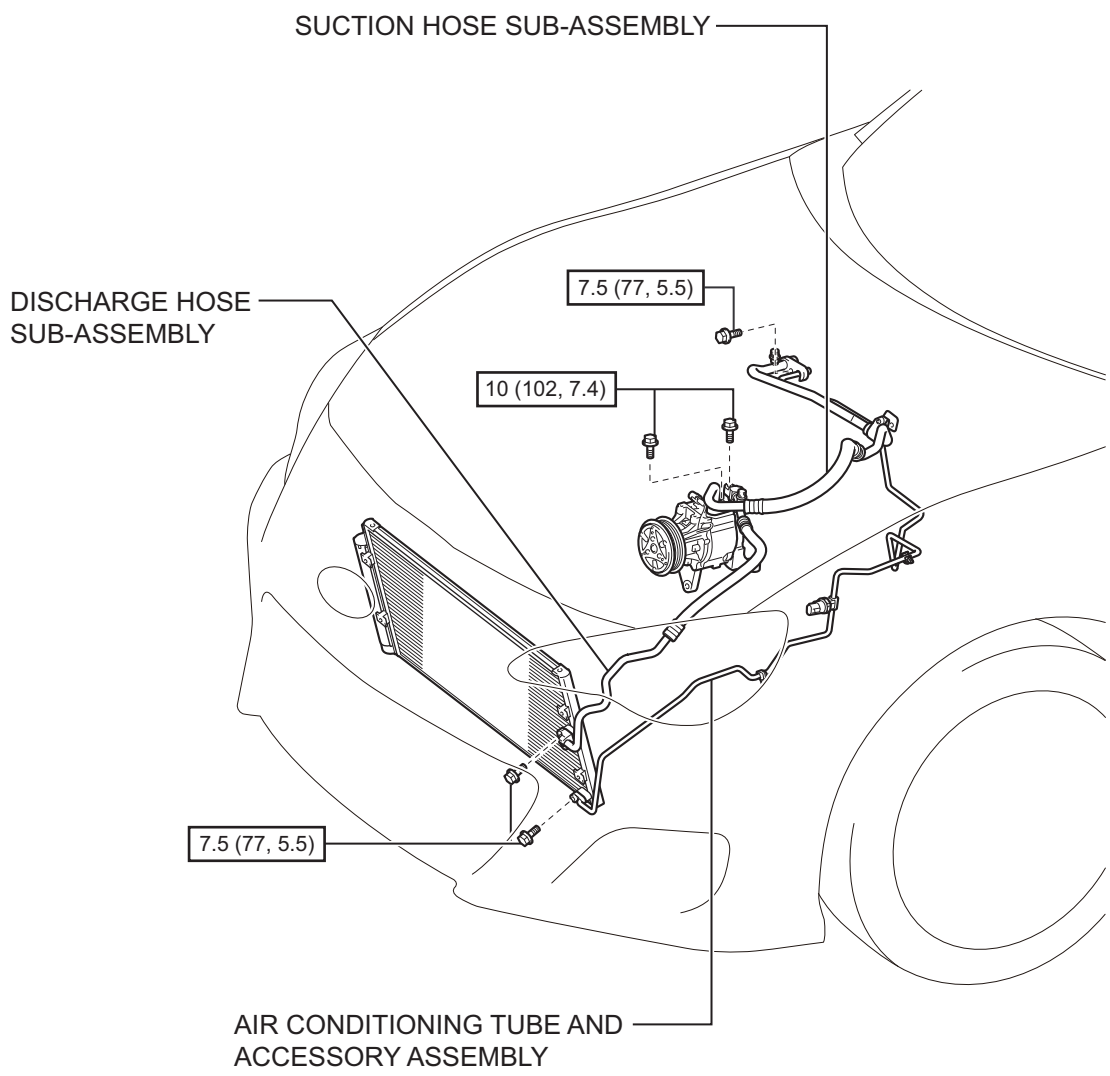

N*m (kgf*cm, ft*lbf) : Specified torque

AC-03041

Air conditioner radiator ASSY

Exploded view

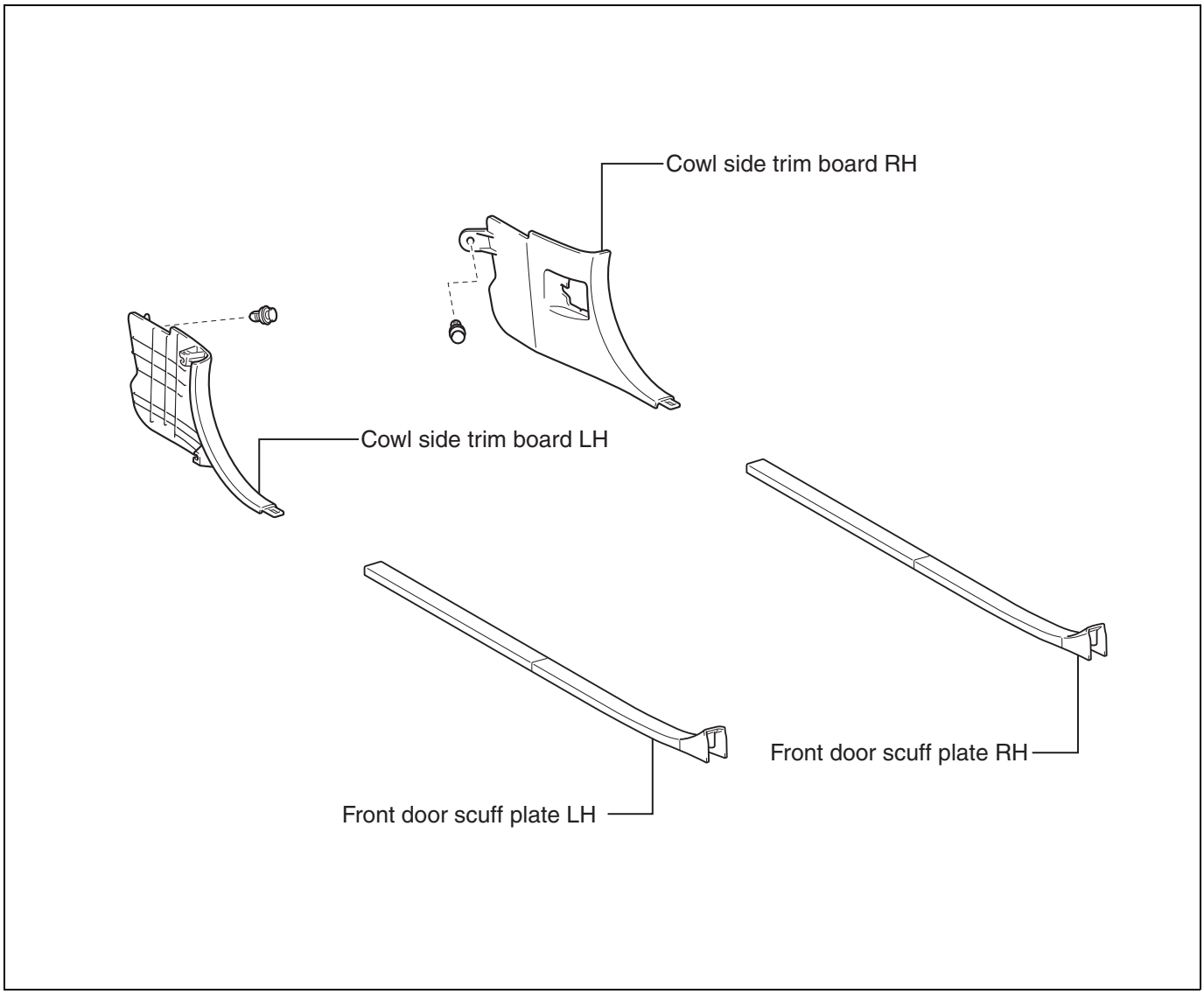

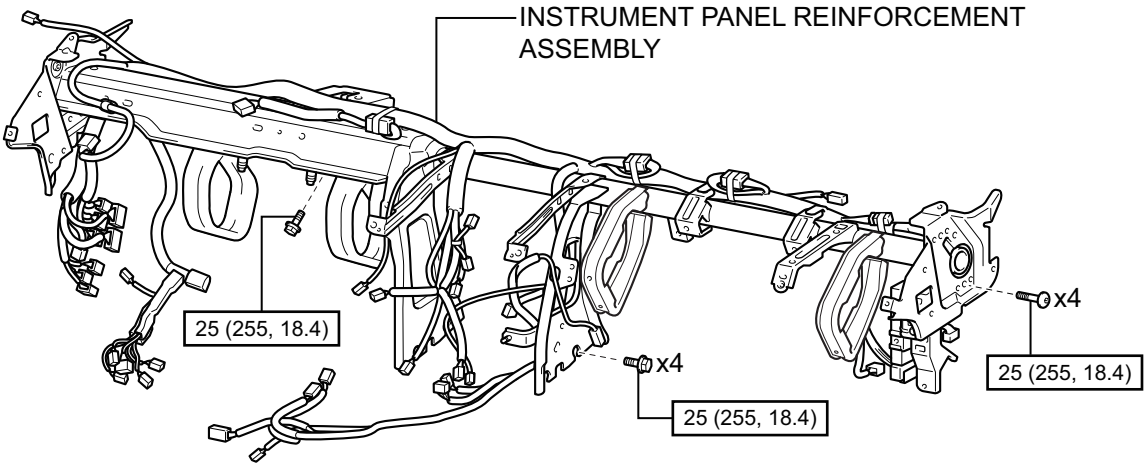

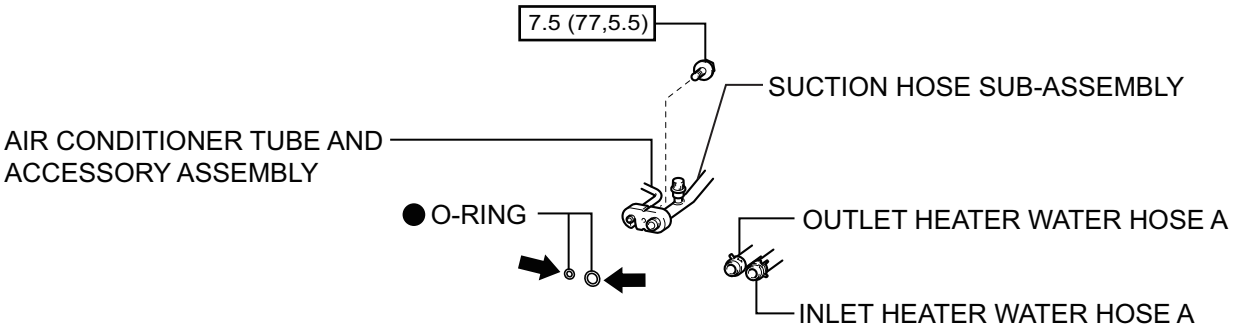

for Automatic Air Conditioning System:

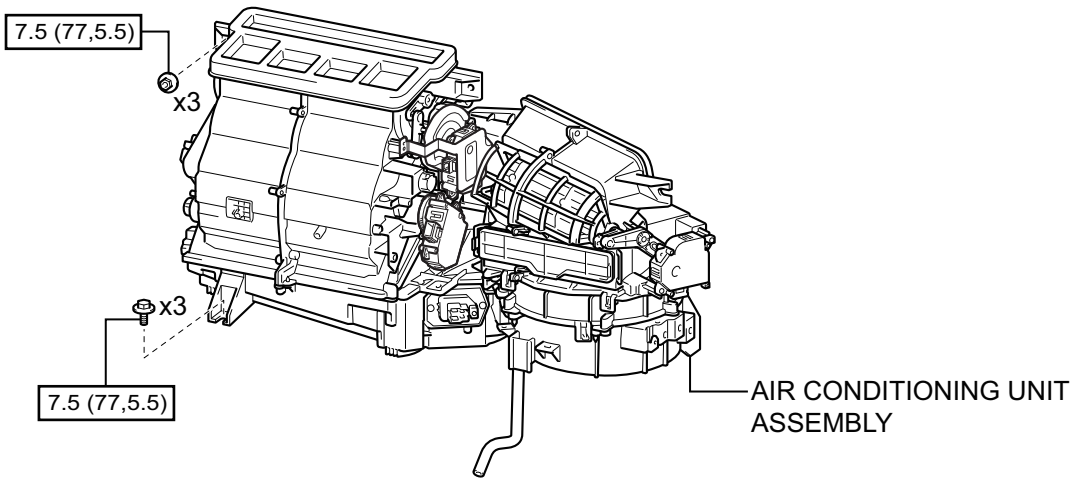

N*m (kgf*cm, ft*lbf) : Specified torque

● Non-reusable part ⬅ Compressor oil ND-OIL 8 or equivalent

AC-03042

for Manual Air Conditioning System:

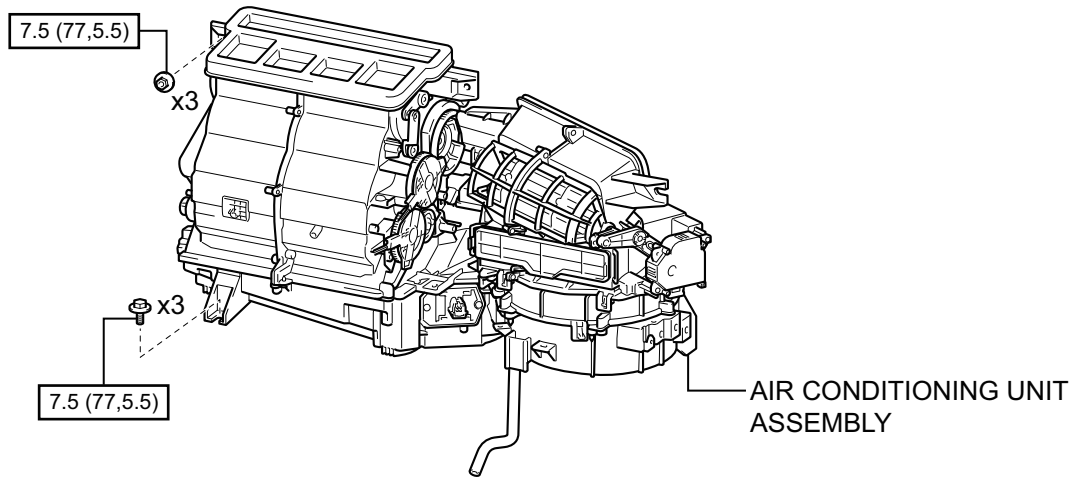

N*m (kgf*cm, ft*lbf) : Specified torque

AC-03043

for Automatic Air Conditioning System:

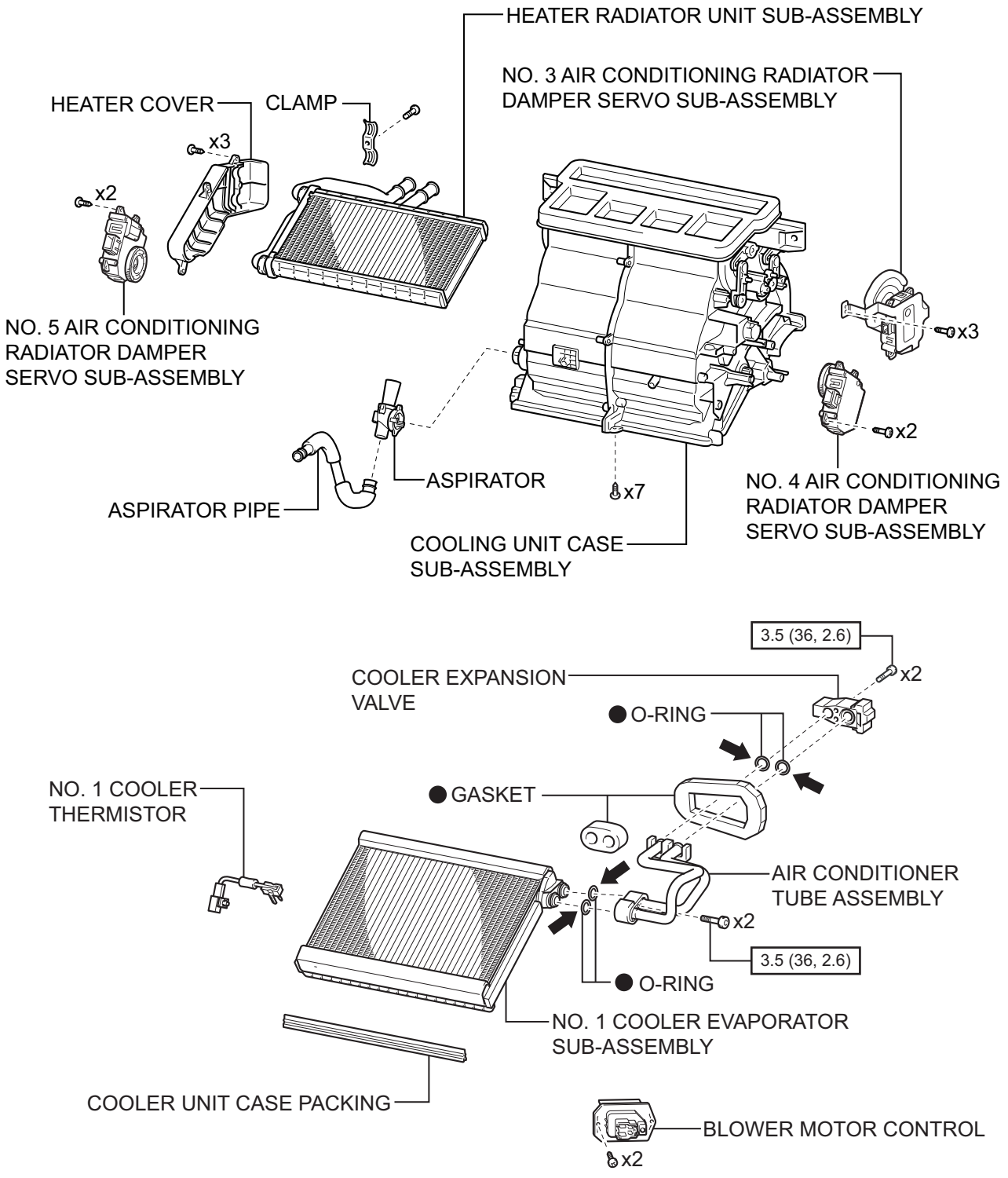

N*m (kgf*cm, ft*lbf) : Specified torque

● Non-reusable part

⬅ Compressor oil ND-OIL 8 or equivalent

AC-03044

AC

for Manual Air Conditioning System:

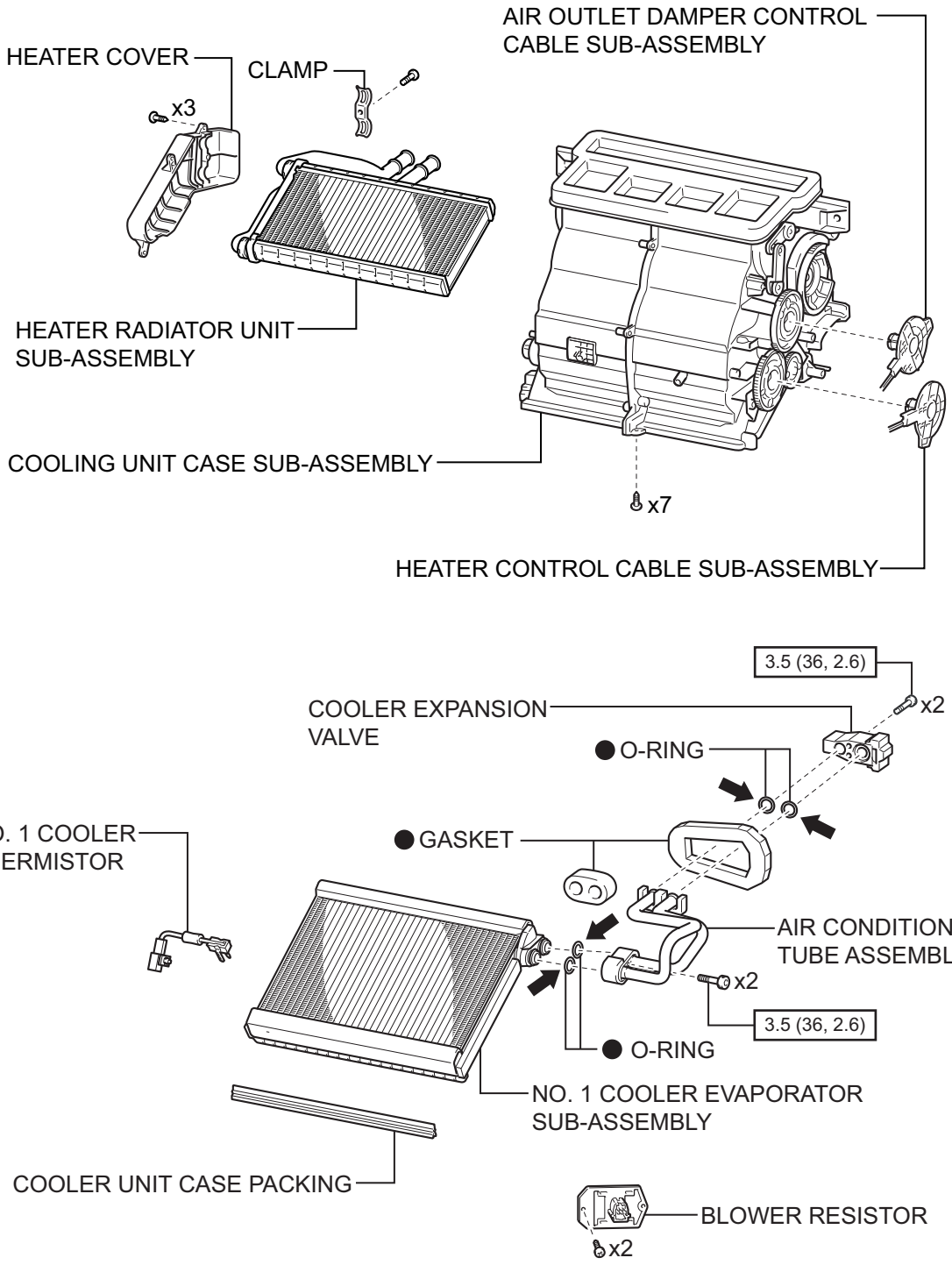

N*m (kgf*cm, ft*lbf) : Specified torque

● Non-reusable part

⬅ Compressor oil ND-OIL 8 or equivalent

AC-03045

AC

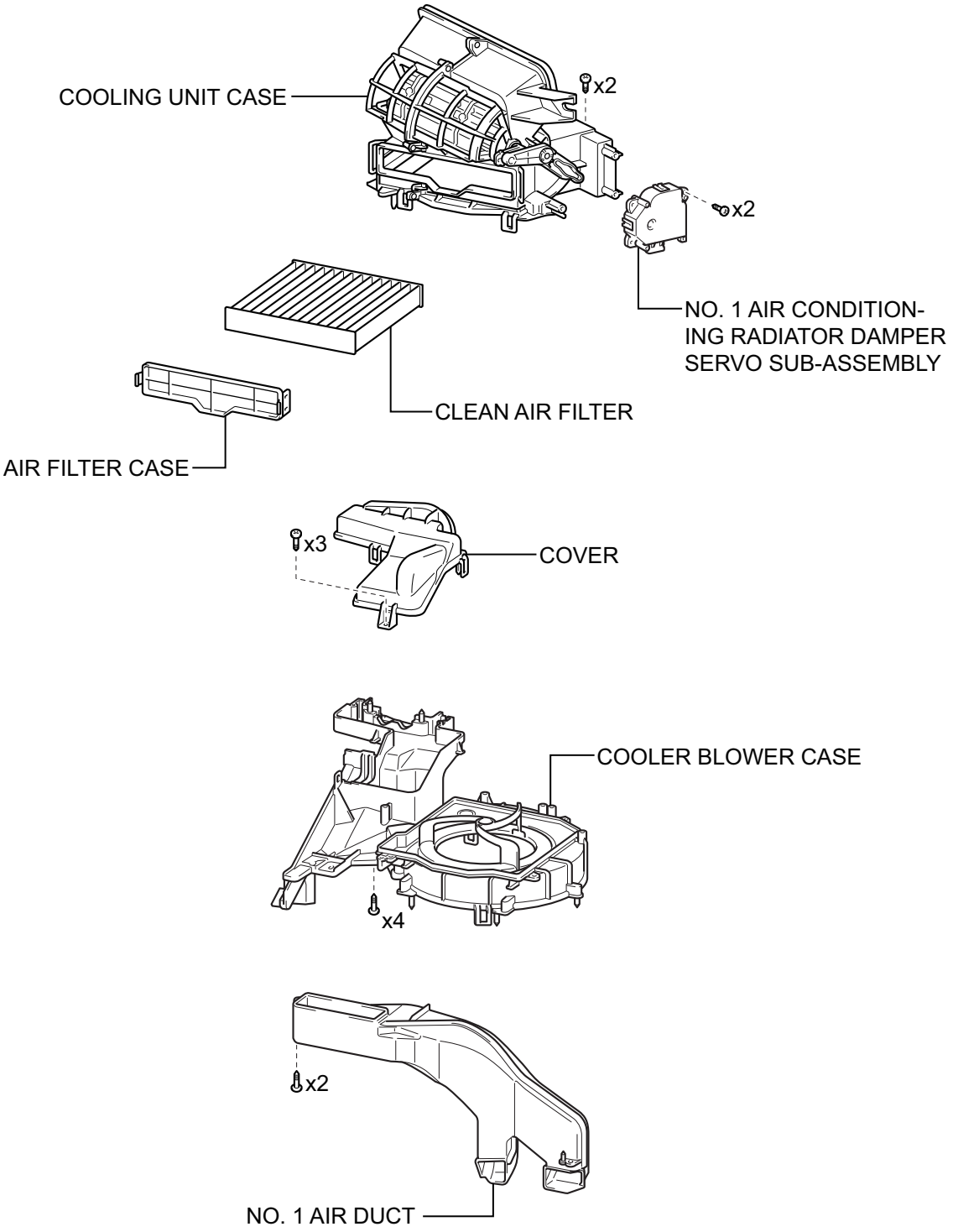
COOLING UNIT CASE
x2
x2
NO. 1 AIR CONDITION-
ING RADIATOR DAMPER
SERVO SUB-ASSEMBLY
CLEAN AIR FILTER
AIR FILTER CASE
x3
COVER
COOLER BLOWER CASE
x4
x2
NO. 1 AIR DUCT
AC-03197

AC

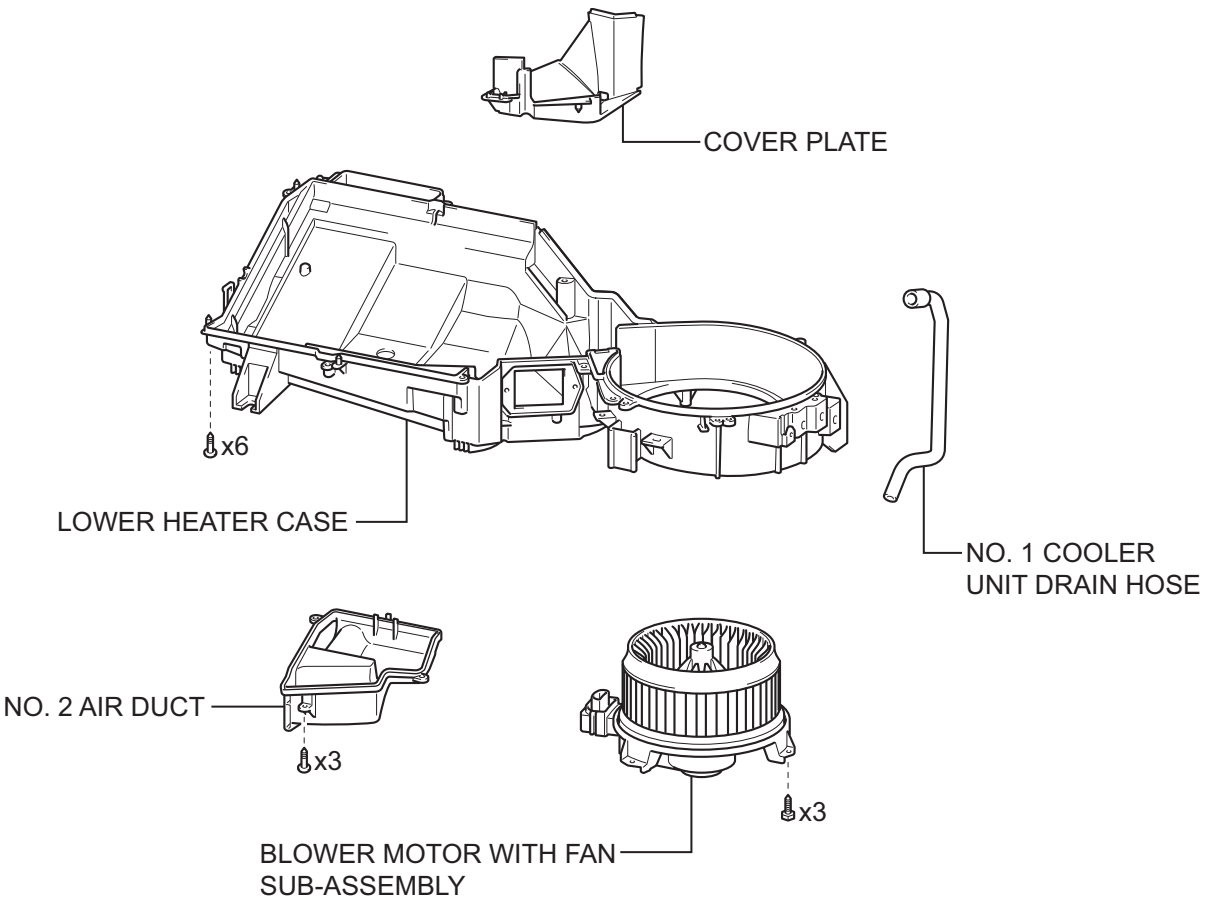

AC

Removal

WARNING:

The following service operations include the works which may affect the SRS airbag system. Before starting work, always be sure to confirm the precautions related to the SRS airbag system. (Refer to RS - 5)

1. Precautions
   CAUTION:
   After turning the ignition switch to OFF, you may have to wait for a while before disconnecting the battery terminals. Check appropriate precautions for battery terminal disconnection before proceeding. (Refer to IN - 6)
2. Discharge of refrigerant HFC-134a (R134a) (Refer to AC - 92)
3. Disconnection of the battery ground terminal
   (1) Turn the ignition switch to OFF, disconnect the battery ground terminal, and then wait for 60 seconds before starting the work.
   WARNING:
   The air bag and pretensioner system are fitted with a backup power supply. If you start the work within 60 seconds after disconnecting the battery ground terminal, the air bag may be activated.
   CAUTION:
   To avoid damage to the molding, be sure to fully open the door glasses on both driver's and passenger's sides.
4. Discharge of coolant (Refer to CO - 16)

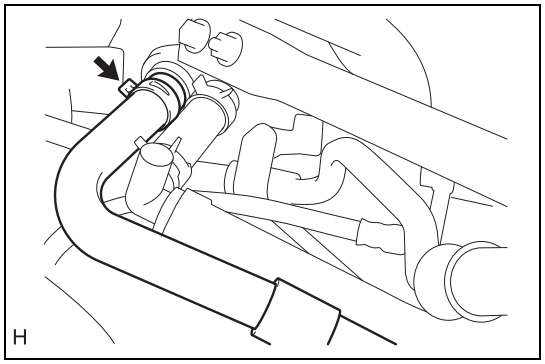

5. Disconnection of heater water hose inlet A
   (1) Move the clip and disconnect heater water hose inlet A.
   CAUTION:
   - Do not apply excessive force to heater water hose inlet A.
   - Since leak of the coolant occurs, prepare a tray.
   - The assembly position needs to be recorded. Put a match mark before disconnection.

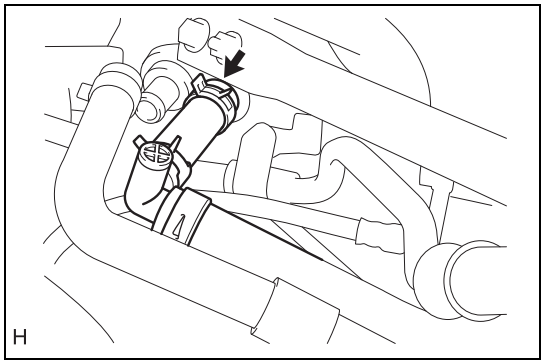

6. Disconnection of heater water hose outlet A
   (1) Move the clip and disconnect heater water hose outlet A.
   CAUTION:
   - Do not apply excessive force to heater water hose outlet A.
   - Since leak of the coolant occurs, prepare a tray.
   - The assembly position needs to be recorded. Put a match mark before disconnection.

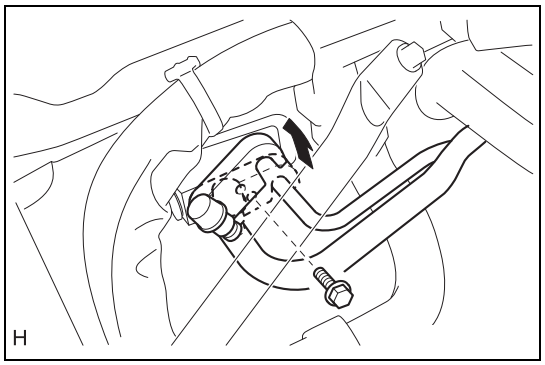

7. Disconnection of suction hose SUB-ASSY
   (1) Remove bolts and turn the hook type connector in the direction of the arrow in the figure.
   (2) Disconnect the suction hose SUB-ASSY.
   (3) Remove the O-ring from the suction hose SUB-ASSY.
   CAUTION:
   Wrap vinyl tape around the fitting areas of the disconnected suction hose SUB-ASSY and the unit to prevent entry of dirt or moisture.

AC

8. Disconnection of air conditioner tube & accessory ASSY
   (1) Disconnect the air conditioner tube & accessory ASSY.
   (2) Remove the O-ring from the air conditioner tube & accessory ASSY.
   CAUTION:
   Wrap vinyl tape around the fitting areas of the disconnected air conditioner tube & accessory ASSY at the unit to prevent entry of dirt or moisture.
9. Removal of instrument panel SUB-ASSY (Refer to IT - 5)
10. Removal of steering column ASSY (Refer to SR - 54)
11. Removal of the front door scuff plate RH (Refer to IT - 48)
12. Removal of front door scuff plate LH (Refer to IT - 48)
13. Removal of the cowl side trim board RH (Refer to IT - 48)
14. Removal of cowl side trim board LH (Refer to IT - 48)
15. Removal of instrument panel reinforcement ASSY
   (1) Driver's side
   (a)Remove the bolts.

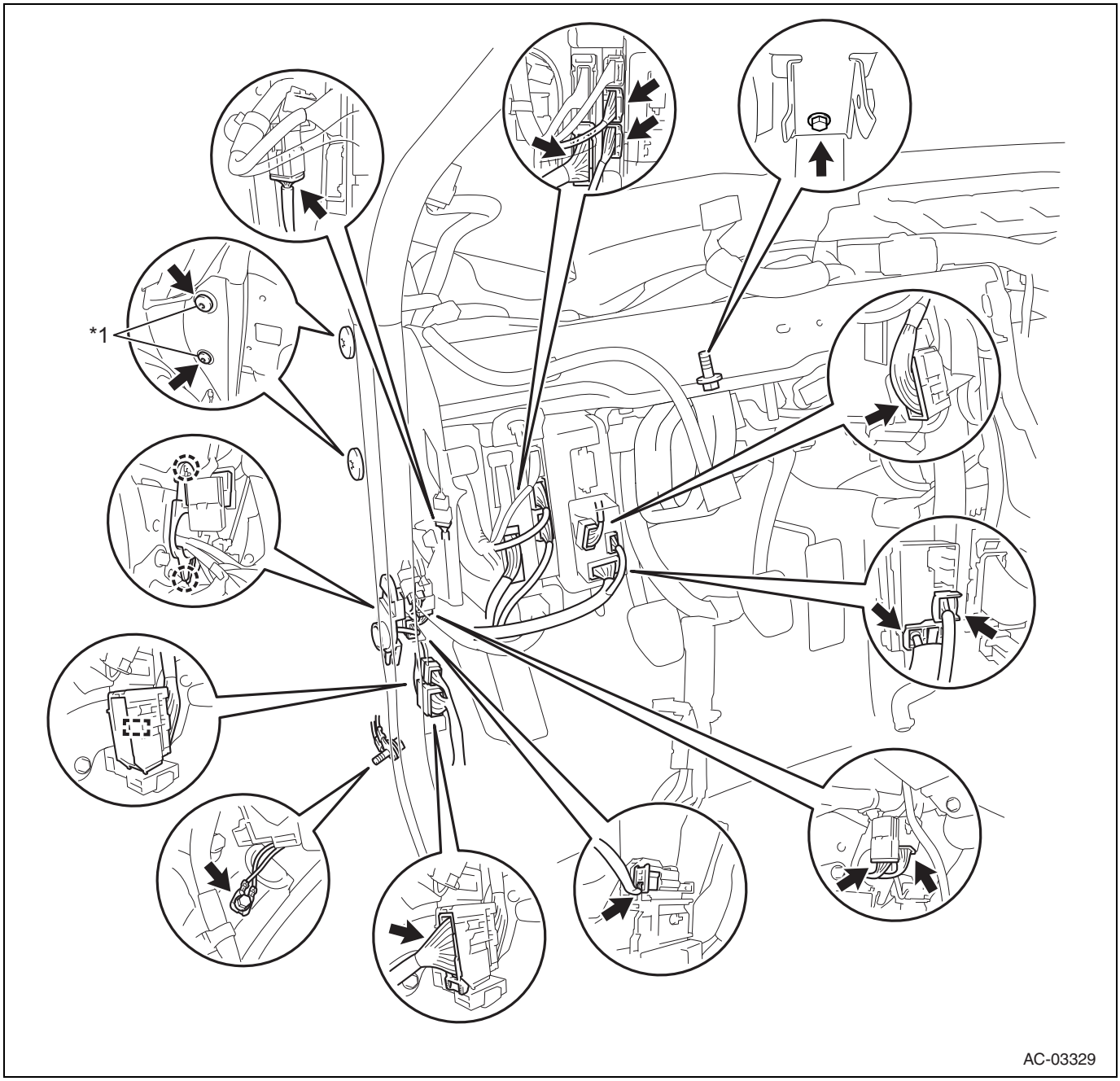

Captions in illustration

*1	Torx bolt	-	-

(b)Disconnect the connectors, and release the 2 clamps and 2 claws.

(2) Center side

(a)Remove the bolts and clips.

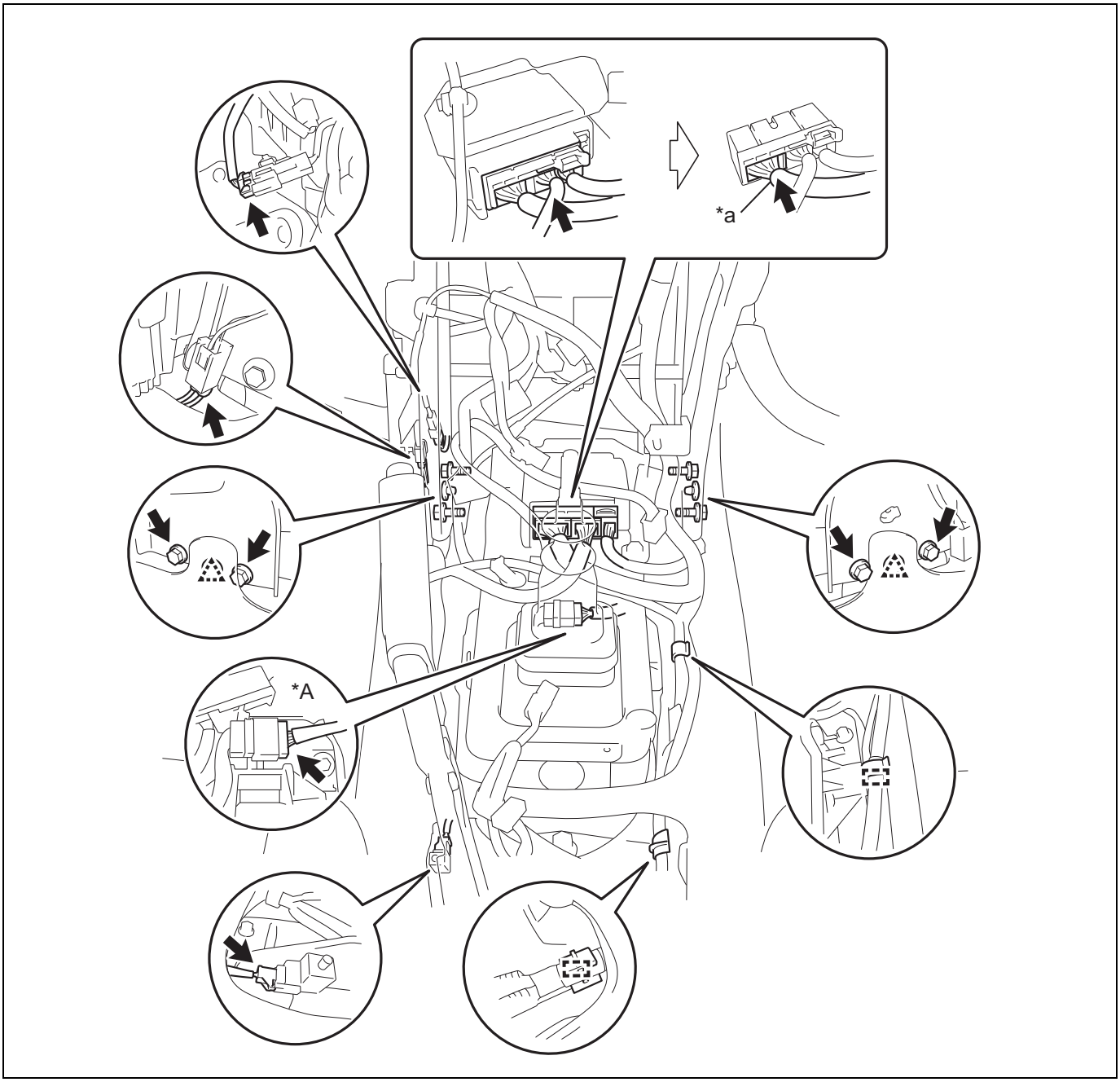

Captions in illustration

*A	For automatic air conditioning system	-	-
*a	Remove the lock plate and disconnect the door sensor connector.	-	-

(b)Disconnect the connectors, and disengage the clamps.

(3) Passenger's side

(a)Remove the bolts.

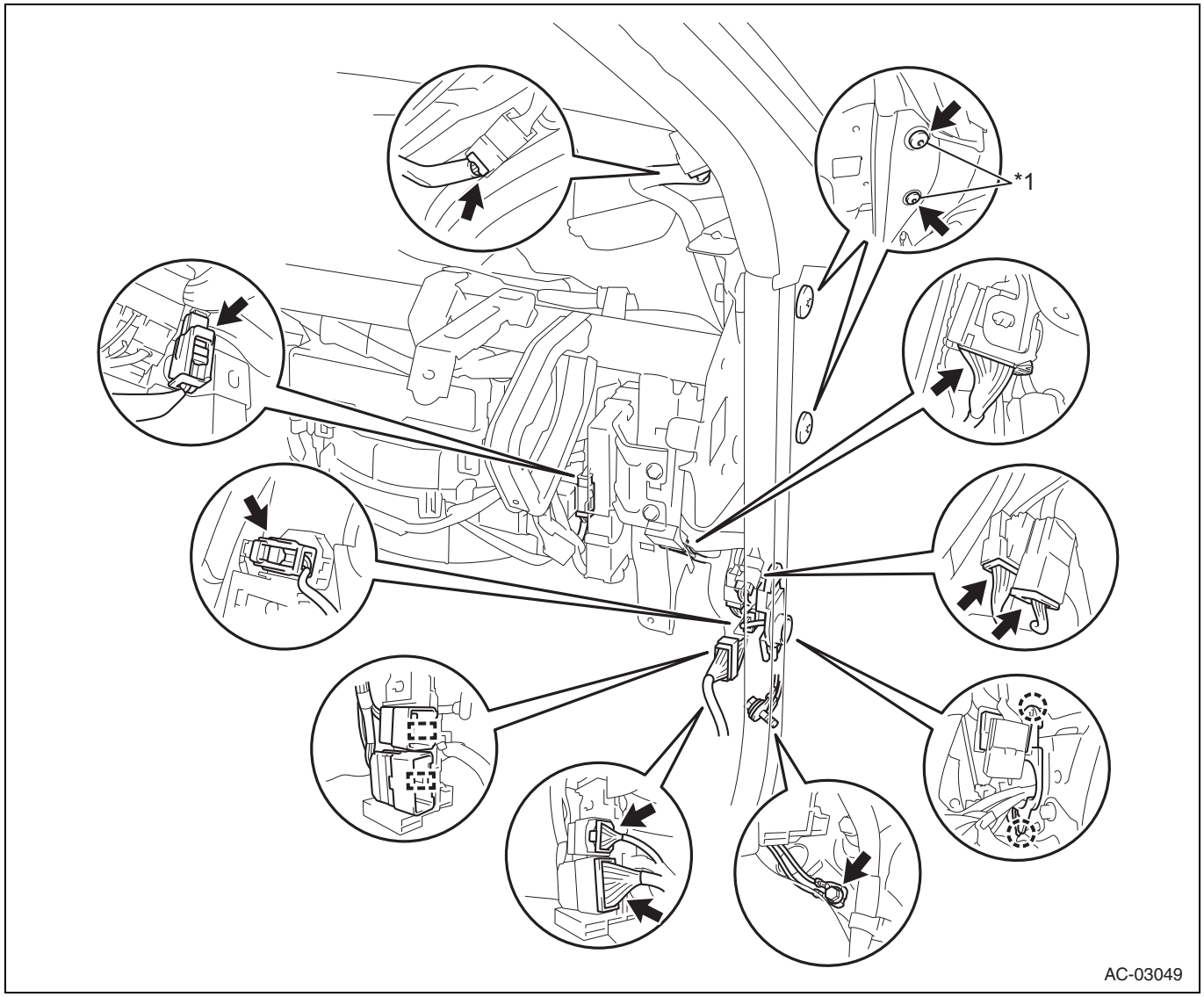

Captions in illustration

*1	Torx bolt	-	-

(b)Disconnect the connectors, and release the 2 clamps and 2 claws.

16. Removal of air conditioner unit ASSY (for automatic air conditioning system)

(1) Disconnect the connectors, and disengage the clamps.

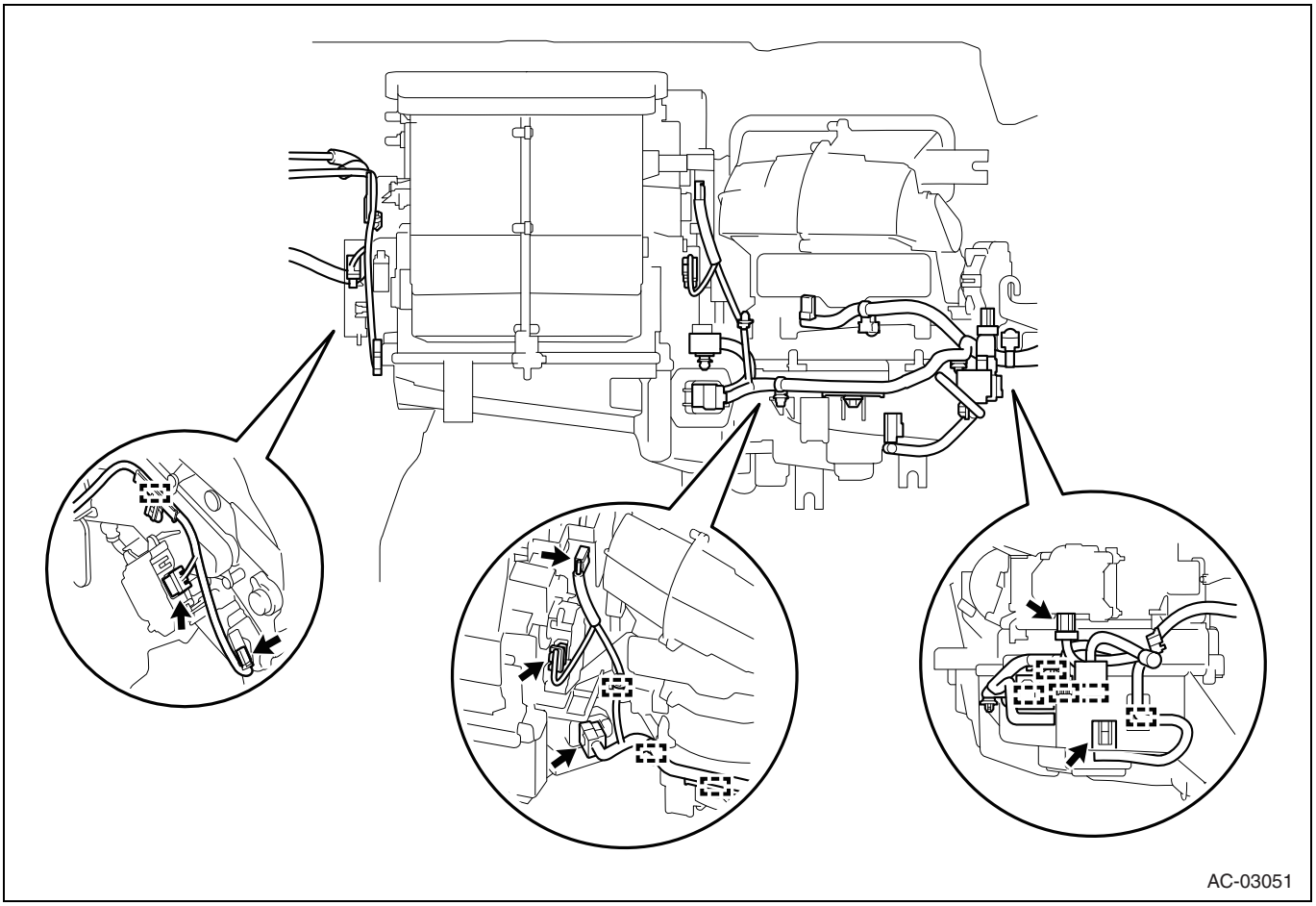

(2) Disconnect the drain cooler hose from the grommet.

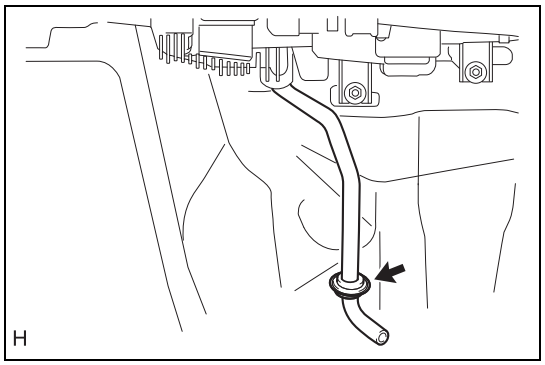

(3) Remove the 3 bolts and 3 nuts to remove the air conditioner unit ASSY.

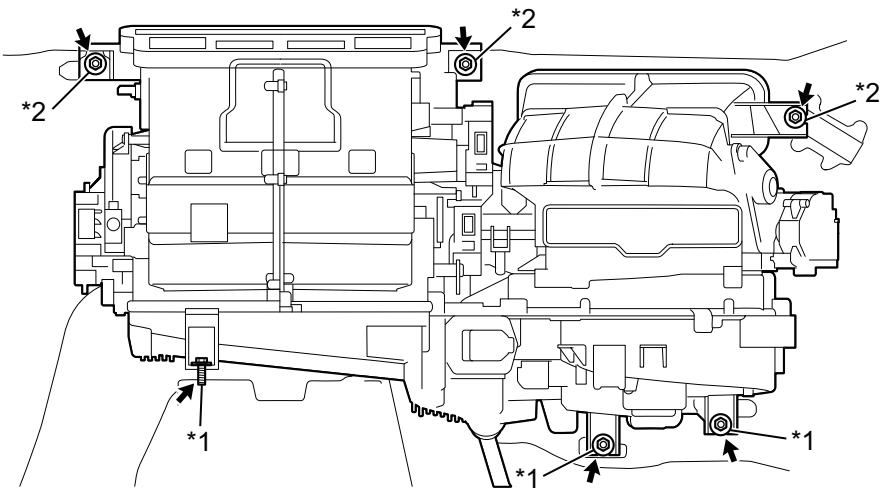

AC-03052

Captions in illustration

*1	Bolt	*2	Nut

17. Removal of air conditioner unit ASSY (for manual air conditioning system)
    (1) Disconnect the connectors, and disengage the clamps.

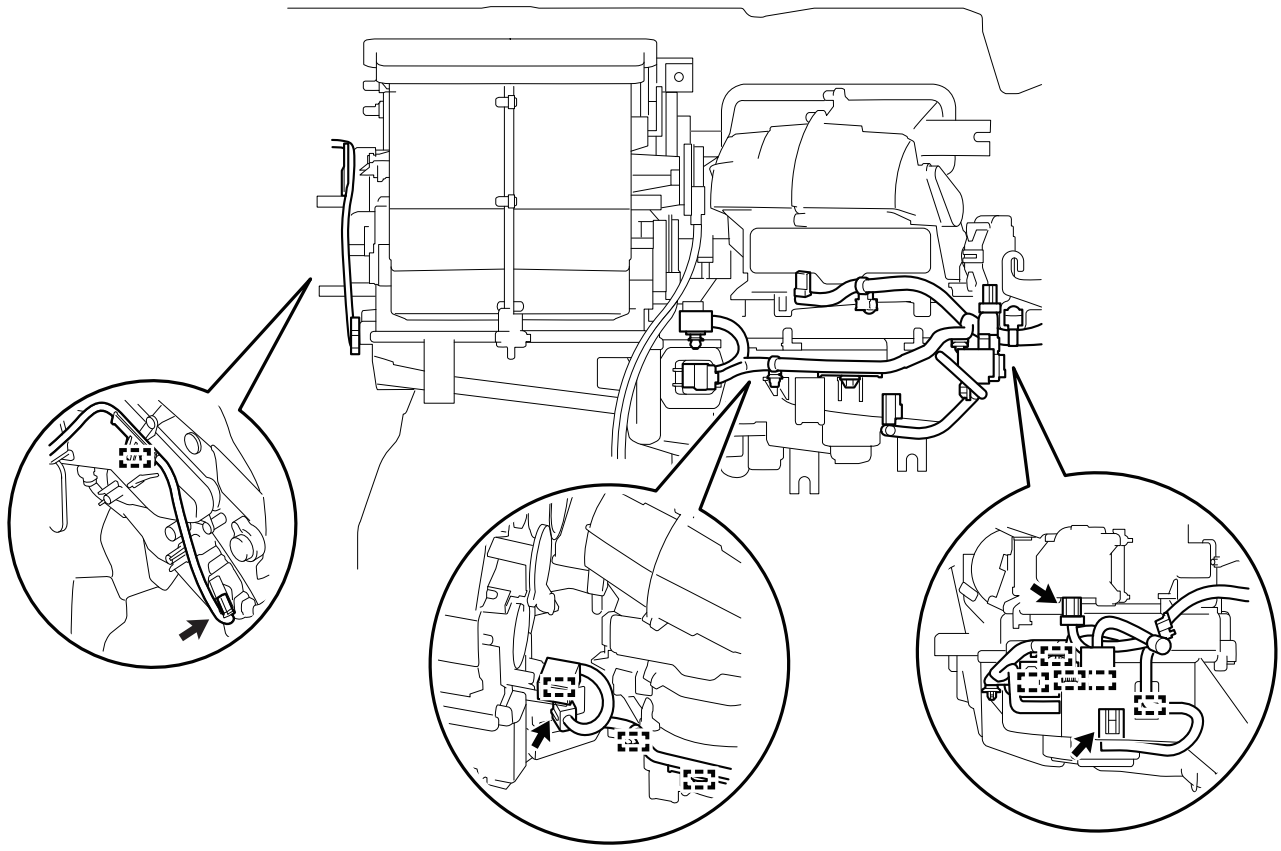

AC-03053

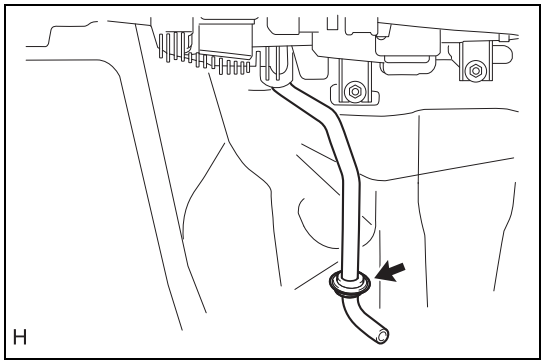

(2) Disconnect the drain cooler hose from the grommet.

(3) Remove the 3 bolts and 3 nuts to remove the air conditioner unit ASSY.

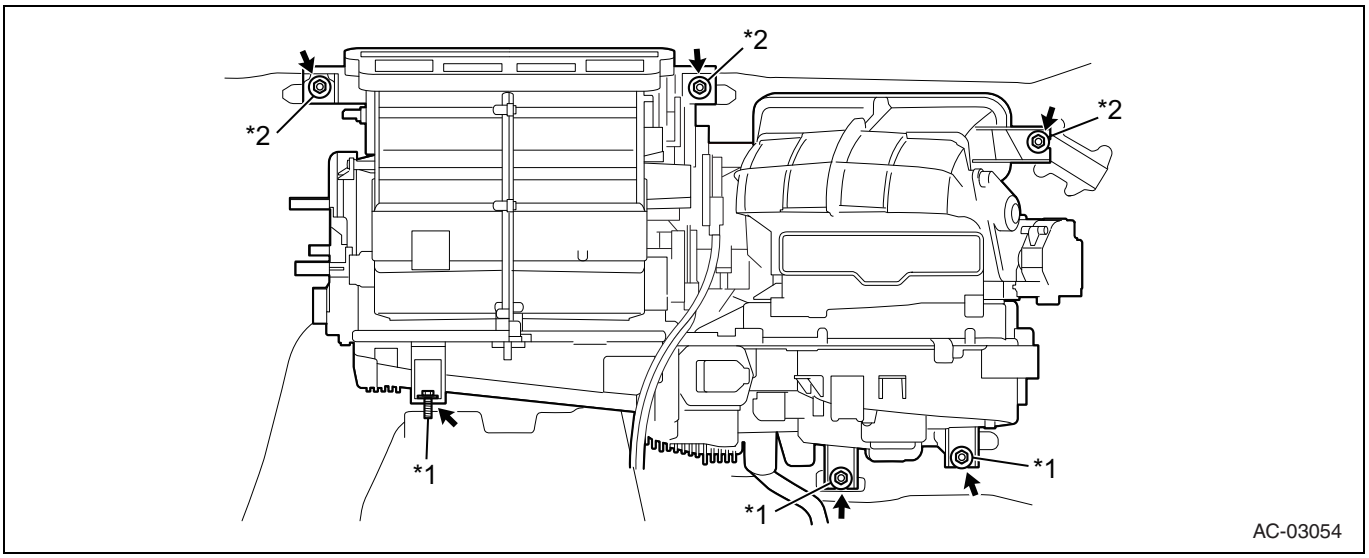

Captions in illustration

*1	Bolt	*2	Nut

AC

Disassembly

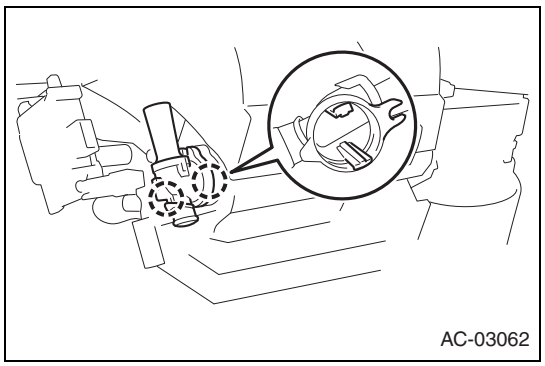

1. Removal of aspirator (for automatic air conditioning system)
   (1) Release the 2 claws and remove the aspirator.

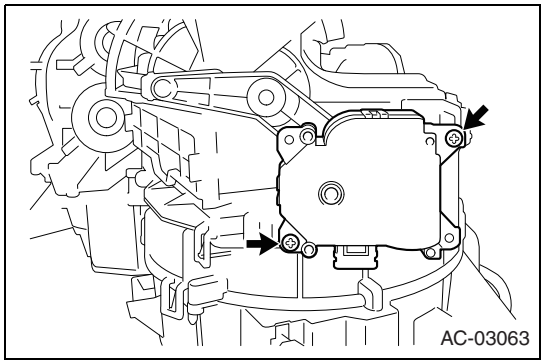

2. Removal of air conditioner radiator damper servo SUB-ASSY NO.1
   (1) Remove the 2 screws and remove the air conditioner radiator damper servo SUB-ASSY NO.1.

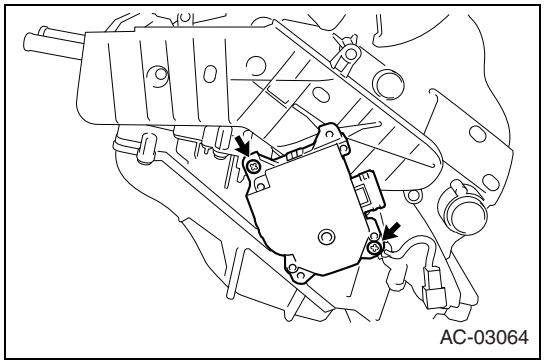

3. Removal of air conditioner radiator damper servo SUB-ASSY NO.5 (for automatic air conditioning system)
   (1) Remove the 2 screws and remove air conditioner radiator damper servo SUB-ASSY NO.5.
   CAUTION:
   When reusing air conditioner radiator damper servo SUB-ASSY NO.5, set the controller position to MAXCOOL on the vehicle before removal and hold it for 30 seconds after setting.

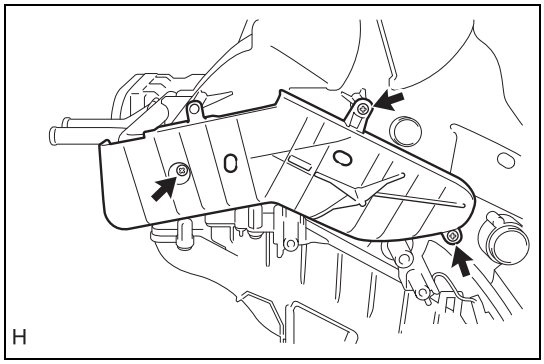

4. Removal of heater cover (for automatic air conditioning system)
   (1) Remove the 3 screws and remove the heater cover.

5. Removal of heater cover (for manual air conditioning system)
   NOTE:
   Repeat the same removal steps for the automatic air conditioning system.

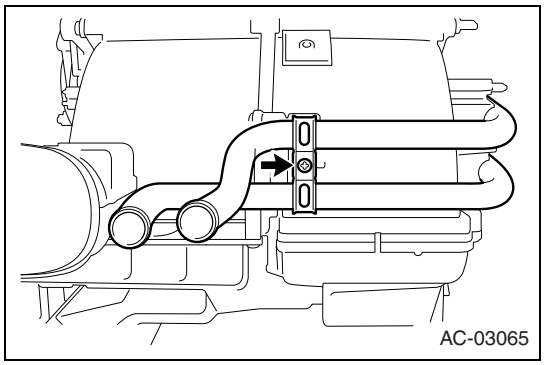

6. Removal of heater radiator unit SUB-ASSY (for automatic air conditioning system)
   (1) Remove the screw and remove the clamp.

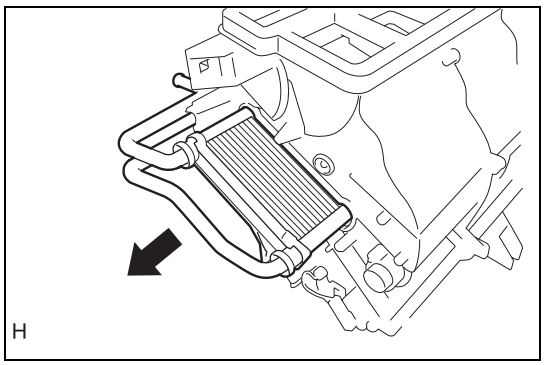

   (2) Slide the heater radiator unit SUB-ASSY in the direction of the arrow in the figure to remove it.

7. Removal of heater radiator unit SUB-ASSY (for manual air conditioning system)
   NOTE:
   Repeat the same removal steps for the automatic air conditioning system.

AC

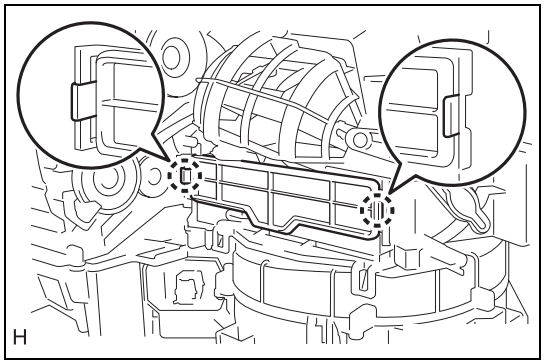

8. Removal of air filter case
   (1) Release the 2 claws and remove the air filter case.

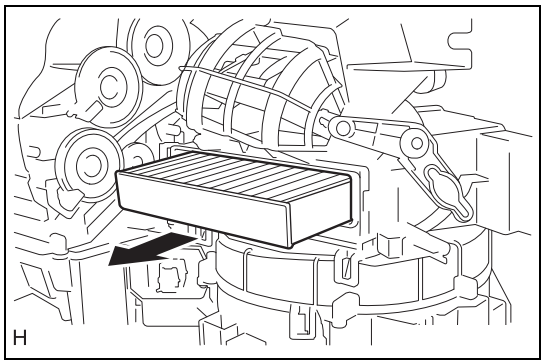

9. Removal of clean air filter
   (1) Slide the clean air filter in the direction of the arrow in the figure to remove it.

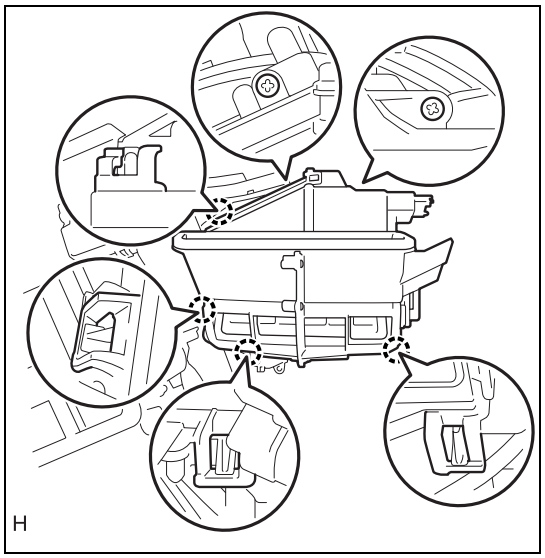

10. Removal of cooling unit case
    (1) Remove the 2 screws.
    (2) Release the 4 claws and remove the cooling unit case.

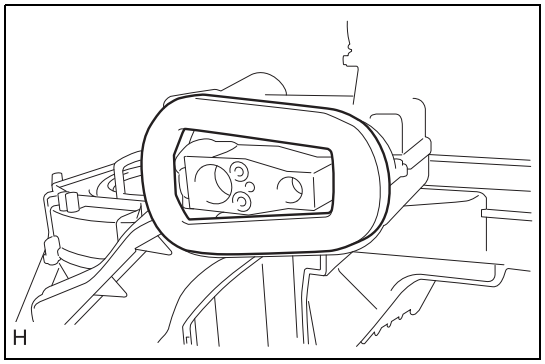

11. Removal of cooler expansion valve (for automatic air conditioning system)
    (1) Remove the gasket.

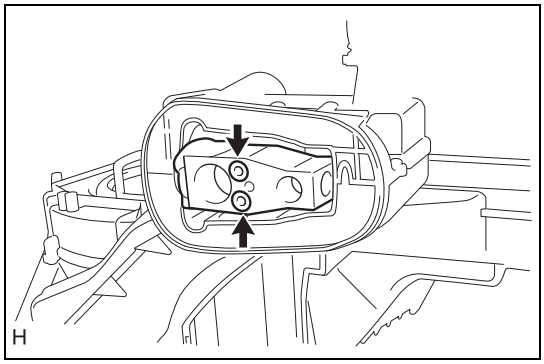

(2) Using hexagon socket wrench 4, remove the 2 hexagon bolts and the cooler expansion valve.

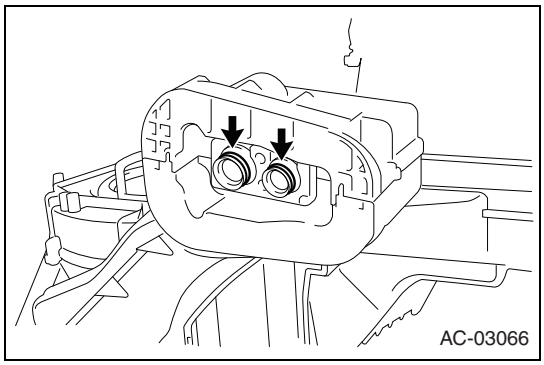

(3) Remove the 2 O-rings from cooler evaporator NO.1.

12. Removal of cooler expansion valve (for manual air conditioning system)

NOTE:

Repeat the same removal steps for the automatic air conditioning system.

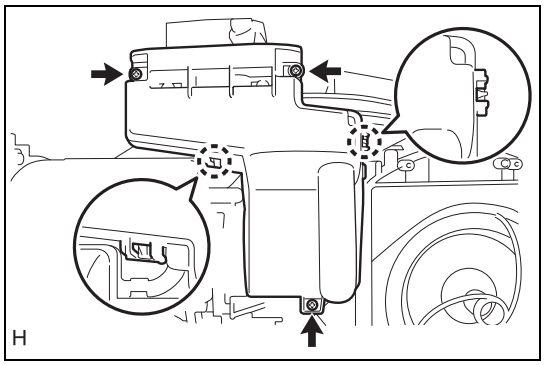

13. Removal of cover
    (1) Remove the 3 screws.
    (2) Release the 2 claws and remove the cover.

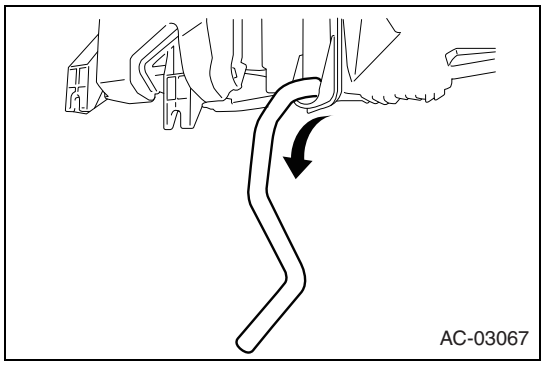

14. Removal of cooler unit drain hose NO.1
    (1) Remove cooler unit drain hose NO.1.

AC

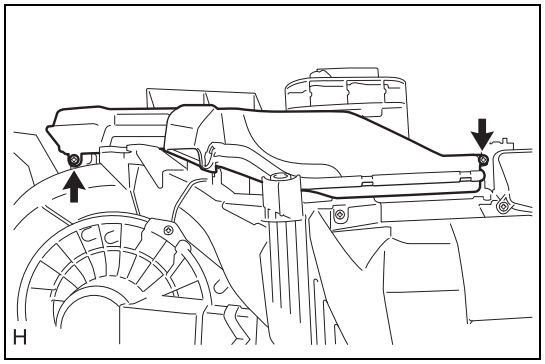

15. Removal of air duct NO.1
    (1) Remove the 2 screws and remove air duct NO.1.

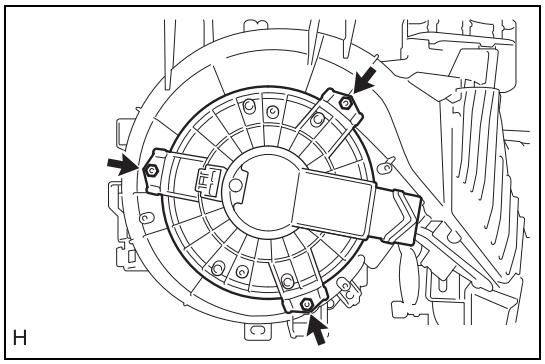

16. Removal of blower motor SUB-ASSY (with fan)
    (1) Remove the 3 screws and remove the blower motor SUB-ASSY (with fan).

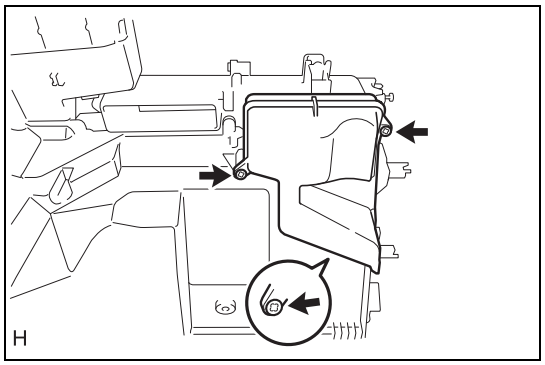

17. Removal of air duct NO.2
    (1) Remove the 3 screws and remove air duct NO.2.

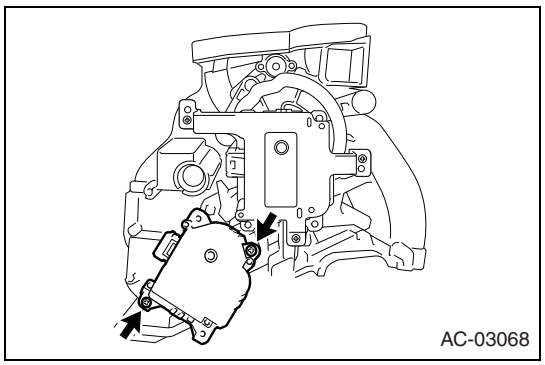

18. Removal of air conditioner radiator damper servo SUB-ASSY NO.4 (for automatic air conditioning system)
    (1) Remove the 2 screws and remove air conditioner radiator damper servo SUB-ASSY NO.4.
    CAUTION:
    When reusing air conditioner radiator damper servo SUB-ASSY NO.4, set the controller position to the servo motor opening angle 32.42 % on the vehicle before removal and hold it for 30 seconds after setting.

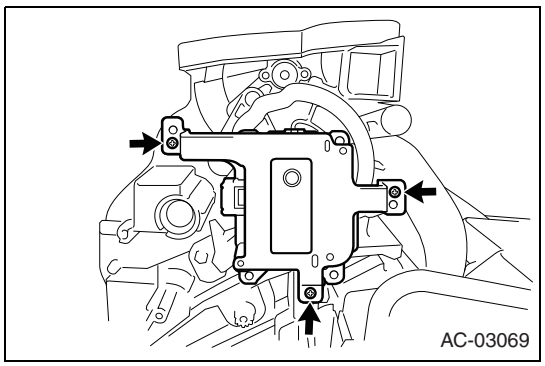

19. Removal of air conditioner radiator damper servo SUB-ASSY NO.3 (for automatic air conditioning system)
    (1) Remove the 3 screws and remove air conditioner radiator damper servo SUB-ASSY NO.3.

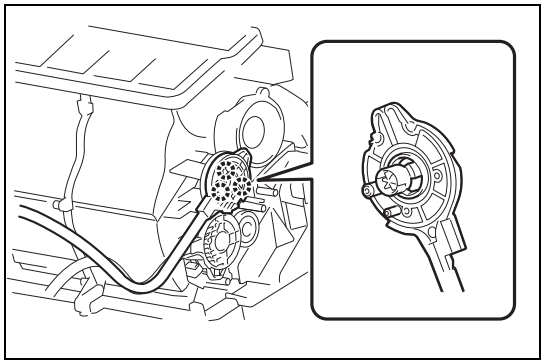

20. Removal of air outlet damper control cable SUB-ASSY (for manual air conditioning system)
    (1) Release the 3 claws and remove the air outlet damper control cable SUB-ASSY.
    CAUTION:
    Hold the control cable and remove it slowly so that the drive gear at the unit may not be pulled.

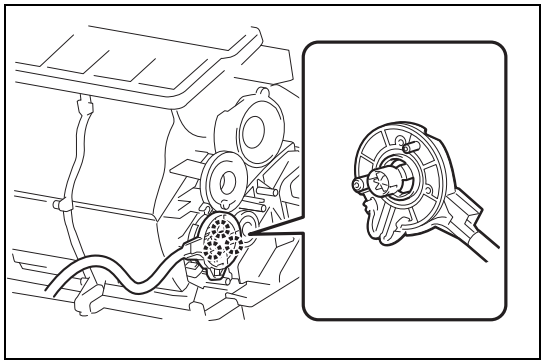

21. Removal of heater control cable SUB-ASSY (for manual air conditioning system)
    (1) Release the 3 claws and remove the heater control cable SUB-ASSY.
    CAUTION:
    Hold the control cable and remove it slowly so that the drive gear at the unit may not be pulled.

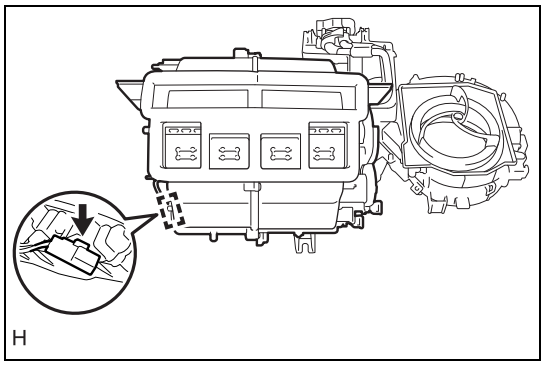

22. Removal of cooling unit case (for automatic air conditioning system)
    (1) Disconnect the clamp.

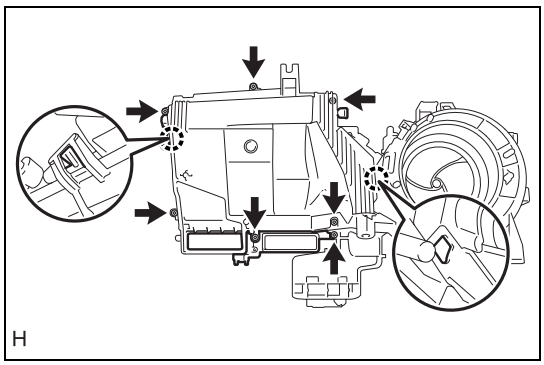

    (2) Remove the 7 screws.
    (3) Release the 2 claws and remove the cooling unit case.

23. Removal of cooling unit case (for manual air conditioning system)
    NOTE:
    Repeat the same removal steps for the automatic air conditioning system.

AC

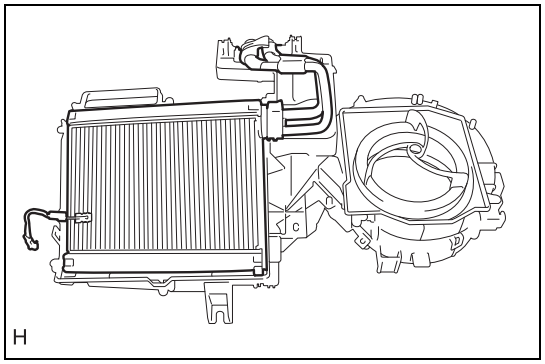

24. Removal of cooler evaporator NO.1 (for automatic air conditioning system)
    (1) Remove cooler evaporator NO.1.

25. Removal of cooler evaporator NO.1 (for manual air conditioning system)
    NOTE:
    Repeat the same removal steps for the automatic air conditioning system.

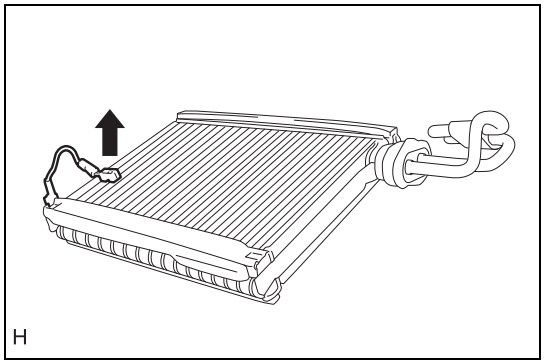

26. Removal of cooler thermistor NO.1 (for automatic air conditioning system)
    (1) Remove the cooler thermistor NO.1.

27. Removal of cooler thermistor NO.1 (for manual air conditioning system)
    NOTE:
    Repeat the same removal steps for the automatic air conditioning system.

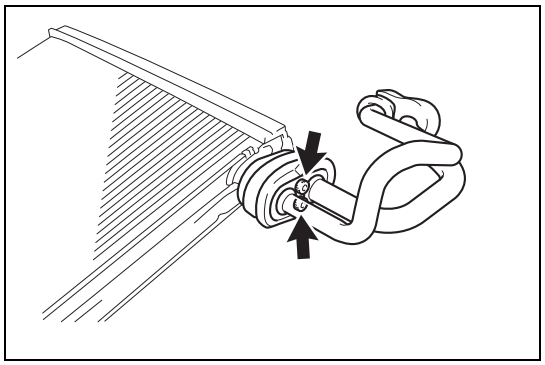

28. Removal of air conditioner tube ASSY (for automatic air conditioning system)
    (1) Using hexagon socket wrench 4, remove the 2 hexagon bolts and the air conditioner tube ASSY.

AC

29. Removal of air conditioner tube ASSY (for manual air conditioning system)
    NOTE:
    Repeat the same removal steps for the automatic air conditioning system.

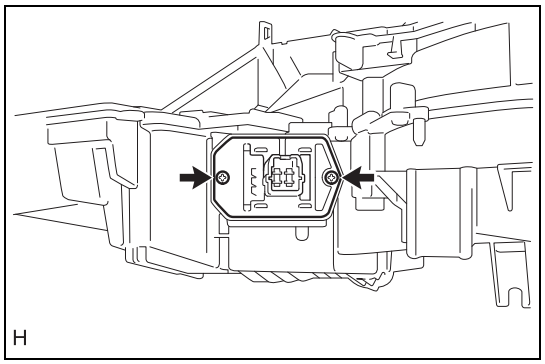

30. Removal of blower motor control (for automatic air conditioning system)
    (1) Remove the 2 screws and remove the blower motor control.

31. Removal of blower register (for manual air conditioning system)
    NOTE:
    Repeat the same removal steps for the blower motor control.

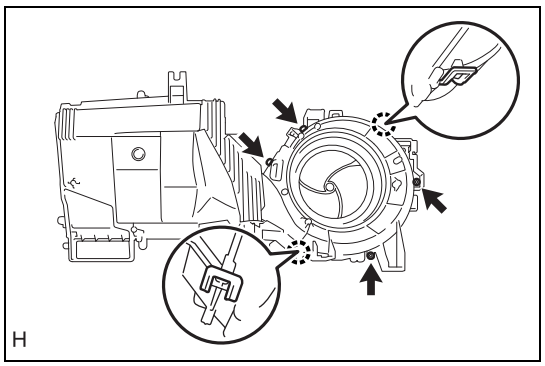

32. Removal of cooler blower case
    (1) Remove the 4 screws and release the 2 claws.

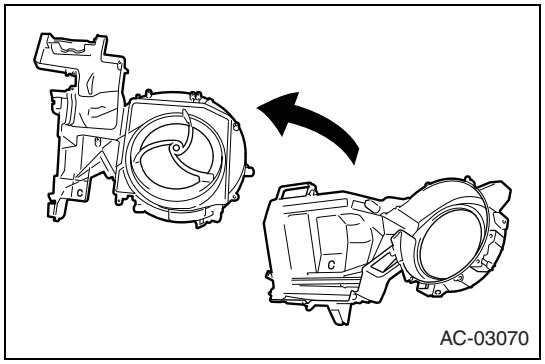

    (2) Remove the cooler blower case from the heater case lower.

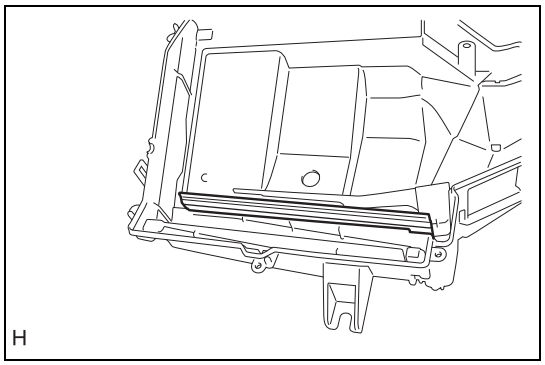

33. Removal of cooler unit case gasket (for automatic air conditioning system)
    (1) Remove the cooler unit spacer.

34. Removal of cooler unit case gasket (for manual air conditioning system)
    NOTE:
    Repeat the same removal steps for the automatic air conditioning system.

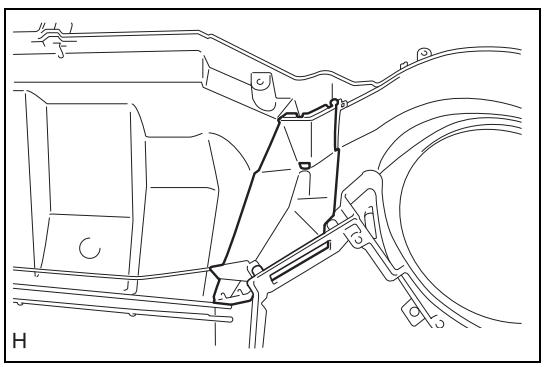

35. Removal of cover plate
    (1) Remove the cover plate.

AC

Assembly

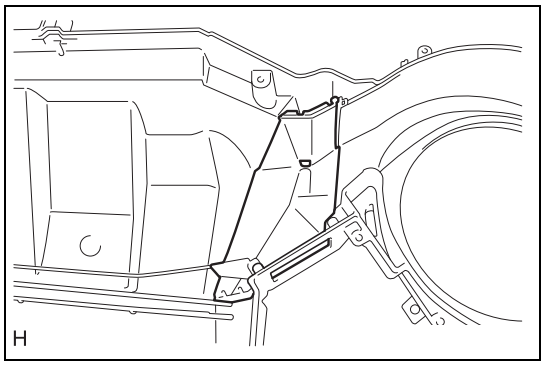

1. Installation of cover plate
   (1) Install the cover plate.

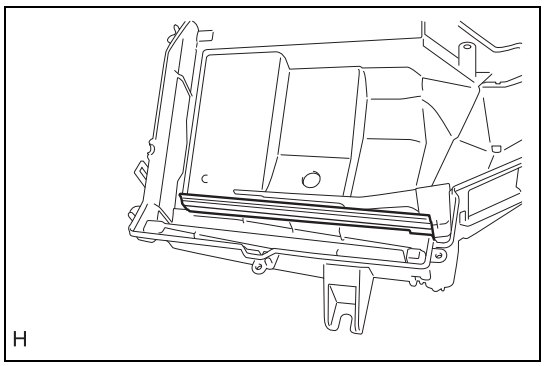

2. Installation of cooler unit case gasket (for automatic air conditioning system)
   (1) Install the cooler unit case gasket.

3. Installation of cooler unit case gasket (for manual air conditioning system)
   NOTE:
   Repeat the same installation steps for the automatic air conditioning system.

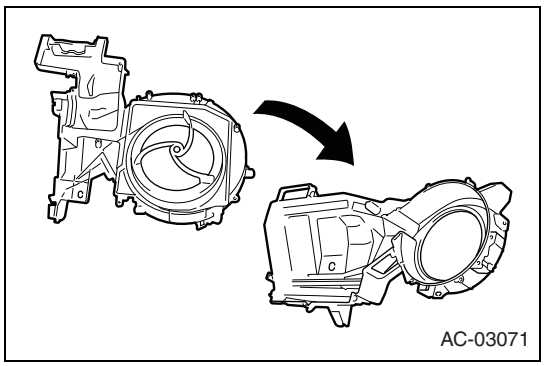

4. Installation of cooler blower case
   (1) Install the cooler blower case on the heater case lower.

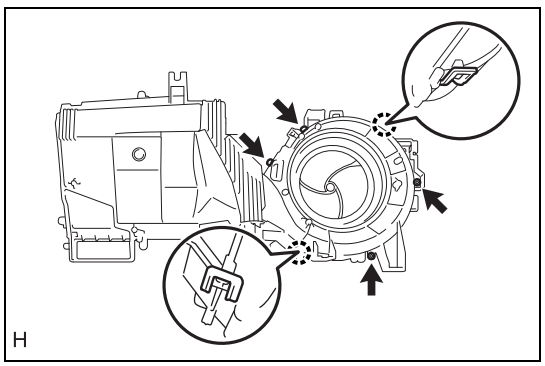

   (2) Fit in the 2 claws.
   (3) Install the blower case ASSY with the 4 screws.

AC

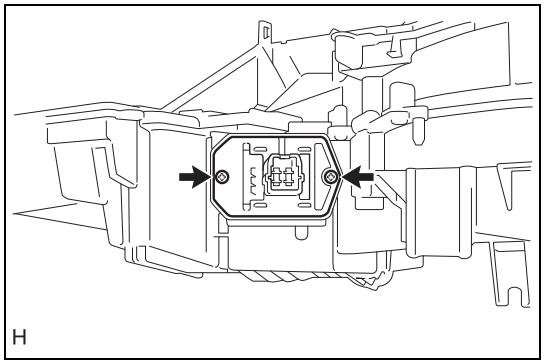

5. Installation of blower motor control (for automatic air conditioning system)
   (1) Install the blower motor control with the 2 screws.

6. Installation of blower register (for manual air conditioning system)
   NOTE:
   Repeat the same installation steps for the blower motor control.

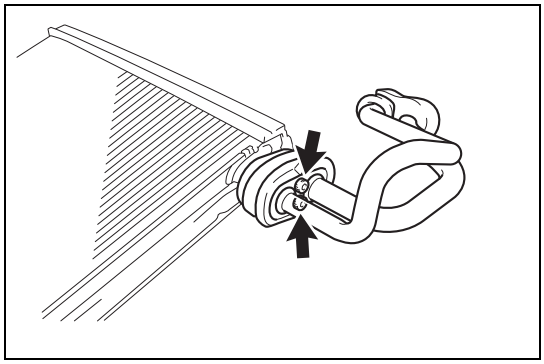

7. Installation of air conditioner tube ASSY (for automatic air conditioning system)
   (1) Using hexagon socket wrench 4, install the air conditioner tube ASSY with the 2 hexagon bolts.
   Standard value:T=3.5N·m {36kgf·cm} {2.6ft·lbf}

8. Installation of air conditioner tube ASSY (for manual air conditioning system)
   NOTE:
   Repeat the same installation steps for the automatic air conditioning system.

9. Installation of cooler thermistor NO.1 (for automatic air conditioning system) (Refer to AC - 166)

10. Installation of cooler thermistor NO.1 (for manual air conditioning system)
    NOTE:
    Repeat the same installation steps for the automatic air conditioning system.

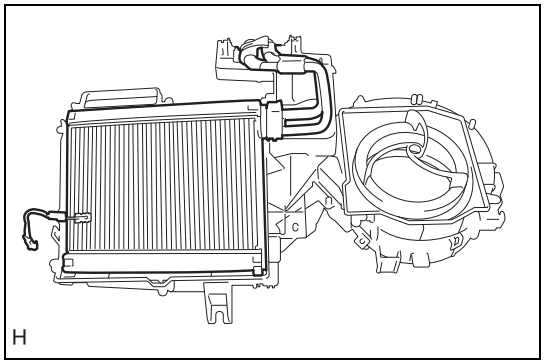

11. Installation of cooler evaporator NO.1 (for automatic air conditioning system)
    (1) Install the cooler evaporator NO.1.

12. Installation of cooler evaporator NO.1 (for manual air conditioning system)
    NOTE:
    Repeat the same installation steps for the automatic air conditioning system.

AC

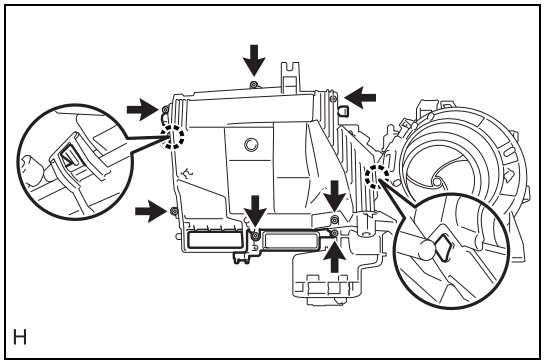

13. Installation of cooling unit case (for automatic air conditioning system)
    (1) Fit in the 2 claws.
    (2) Install the cooling unit case with the 7 screws.

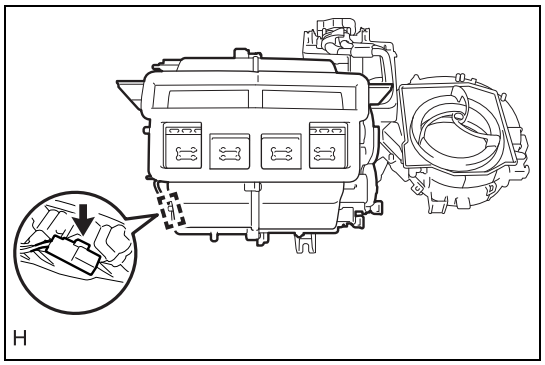

    (3) Connect the clamp.

14. Installation of cooling unit case (for manual air conditioning system)
    NOTE:
    Repeat the same installation steps for the automatic air conditioning system.
15. Installation of heater control cable SUB-ASSY (for manual air conditioning system)
    CAUTION:
    - Be careful that dust, dirt, etc. may not stay on grease at the gear during work.
    - Do not hold the gear with cotton gloves.

AC

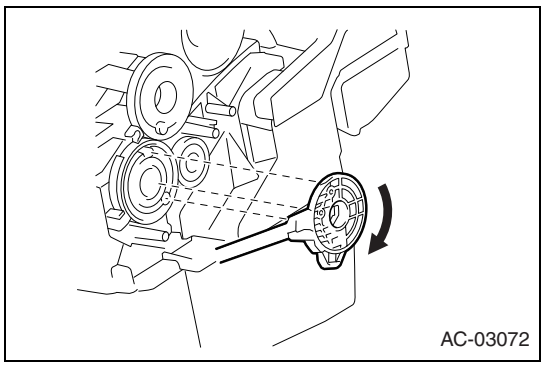

    (1) Turn the pin at the cable side fully in the direction of the arrow and position the assembly to the gear hole.
    NOTE:
    Set to the position of MAX HOT.

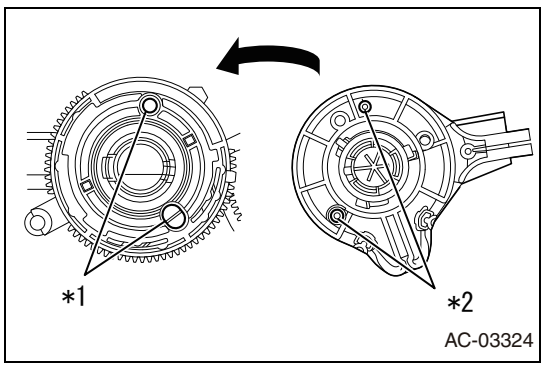

    (2) Hold the drive gear protrusion and turn the assembly to fit in the case cylinder.

Captions in illustration

*1	Drive gear insertion hole
*2	Control cable positioning pin

    NOTE:
    Temperature control position: MAX HOT

    (3) Insert the positioning pins of the control cable slowly to the end so that they fit the drive gear insertion holes to install the heater control cable SUB-ASSY.

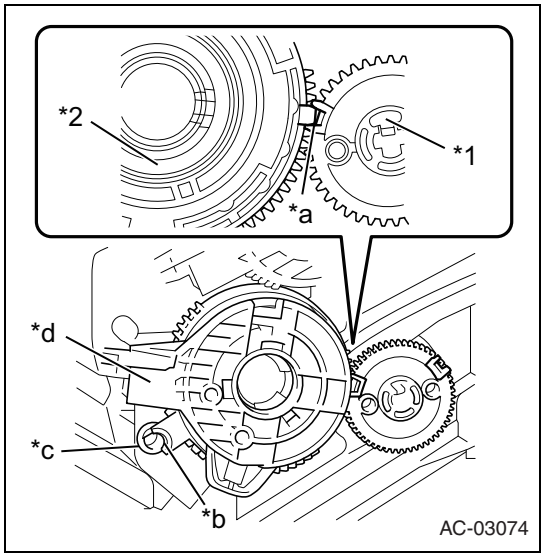

(4) Gear replacement

(a) When replacing the drive gear, pull the plastic part of the control cable slowly for removal.

Captions in illustration

*1	Shaft gear
*2	Drive gear
*a	Specified location
*b	Drive gear protrusion
*c	Case cylinder
*d	Plastic part of control cable

CAUTION:
Do not pull the drive gear together.

(b) Pull the drive gear slowly for removal.

(c) Turn the shaft gear counterclockwise slowly until it stops.

CAUTION:
Be careful that it is not turned excessively.

(d) Align the shaft gear and the drive gear to the reference position, and insert the drive gear into the heater case slowly.

16. Installation of air outlet damper control cable SUB-ASSY (for manual air conditioning system)

CAUTION:
- Be careful that dust, dirt, etc. may not stay on grease at the gear during work.
- Do not hold the gear with cotton gloves.

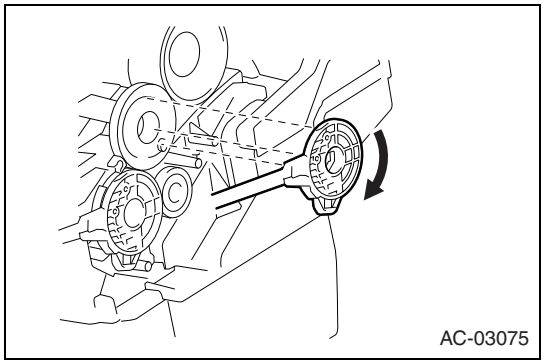

(1) Turn the pin at the cable side fully in the direction of the arrow and position the assembly to the gear hole.

NOTE:
Set to the position of DEF.

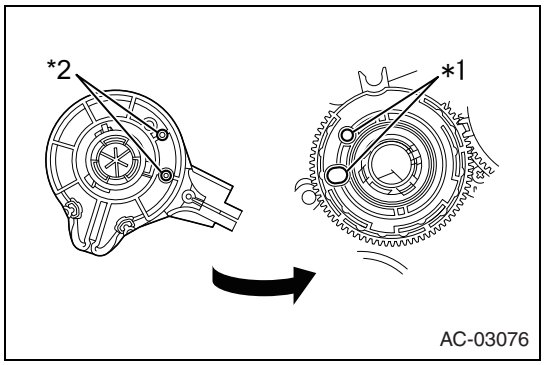

(2) Hold the drive gear protrusion and turn the assembly clockwise until it stops.

Captions in illustration

*1	Drive gear insertion hole
*2	Control cable positioning pin

NOTE:
Mode position: DEF

(3) Insert the positioning pins of the control cable slowly to the end so that they fit the drive gear insertion holes to install the air outlet damper control cable SUB-ASSY.

AC

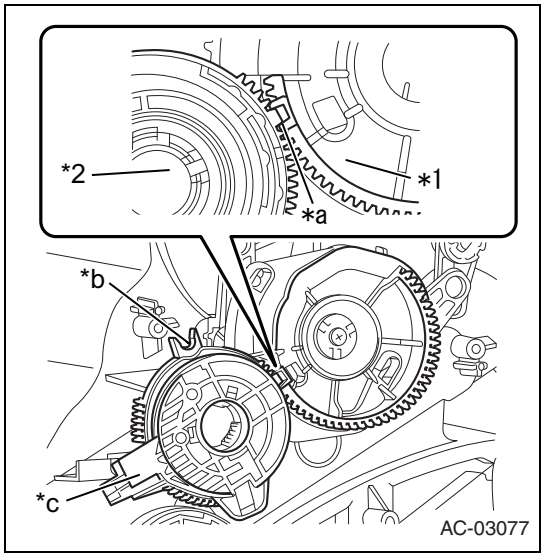

(4) Gear replacement

(a) When replacing the drive gear, pull the plastic part of the control cable slowly for removal.

Captions in illustration

*1	Mode main link
*2	Drive gear
*a	Specified location
*b	Drive gear protrusion
*c	Plastic part of control cable

CAUTION:
Do not pull the drive gear together.

(b) Pull the drive gear slowly for removal.

(c) Align the mode main link and the drive gear to the reference position, and insert the drive gear into the heater case slowly.

17. Installation of air conditioner radiator damper servo SUB-ASSY NO.3 (for automatic air conditioning system)

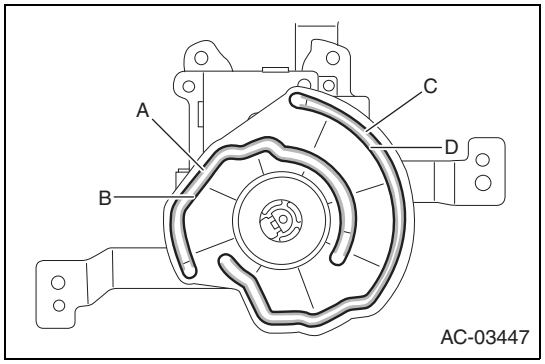

(1) When replacing the air conditioner radiator damper servo SUB-ASSY NO.3 with a new one, apply a thin coat of grease evenly to the working surface A inside the link plate rail with the amount of 5 mm out of the tube (approx. 0.1 g). Similarly, apply a thin coat of grease with the same amount also evenly on the working surface B to D.

Captions in illustration

	SUBARU genuine grease (Refer to "Preparation items-Air Conditioner")

NOTE:
After the installation of air conditioner radiator damper servo SUB-ASSY NO.3, operate it 3 to 5 times to blend the grease.

AC

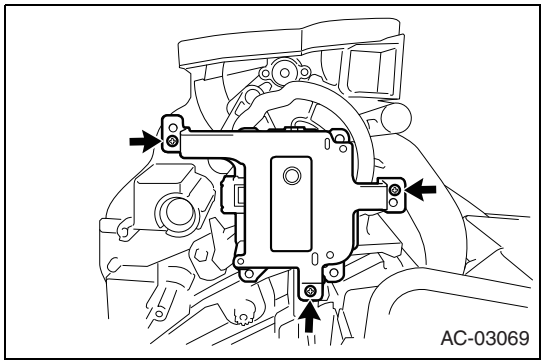

(2) Align the link pin with the main link groove, and install air conditioner radiator damper servo SUB-ASSY NO.3 with the 3 screws.

18. Installation of air conditioner radiator damper servo SUB-ASSY NO.4 (for automatic air conditioning system)

CAUTION:

- Be careful that dust, dirt, etc. may not stay on grease at the gear during work.
- Do not hold the gear with cotton gloves.

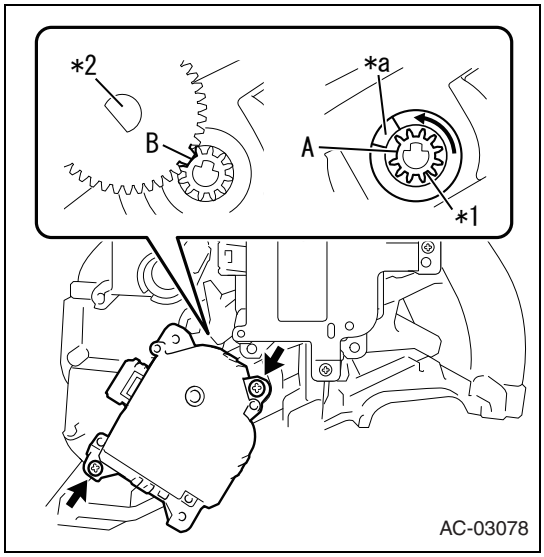

(1) Turn the air mix shaft in the direction of the arrow slowly until it stops.

Captions in illustration

*1	Air mix shaft
*2	Shaft gear
*a	Specified location

CAUTION:
Be careful that it is not turned excessively.

(2) Turn the air mix shaft so that portion A of the air mix shaft is aligned with the reference position of the case.
CAUTION:
Since the air mix shaft can be turned approx. 360°, be careful for the assembly.

(3) Align gear B of air conditioner radiator damper servo SUB-ASSY NO.4 with shaft gear A.
CAUTION:
Since the air mix shaft can be turned approx. 360°, be careful for the assembly.

(4) Align potion A of the air mix shaft and shaft gear B with the reference position, and install air conditioner radiator damper servo SUB-ASSY NO.4 with the 2 screws.

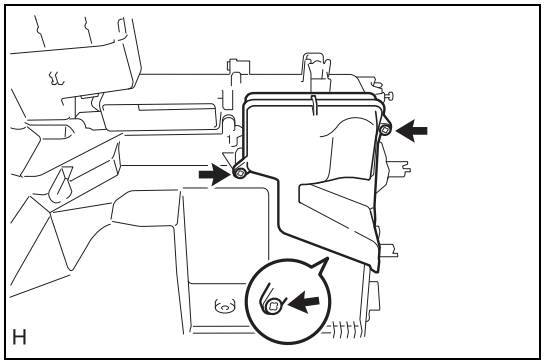

19. Installation of air duct NO.2
(1) Install air duct NO.2 with the 3 screws.

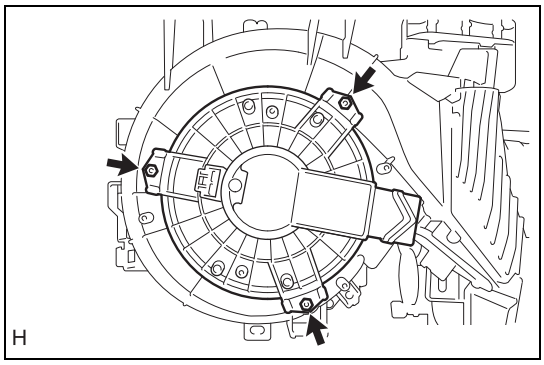

20. Installation of blower motor SUB-ASSY (with fan)
(1) Install the blower motor SUB-ASSY (with fan) with the 3 screws.

AC

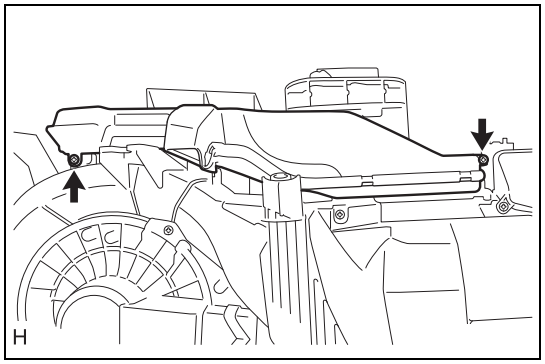

21. Installation of air duct NO.1
    (1) Install the air duct NO.1 with the 2 screws.

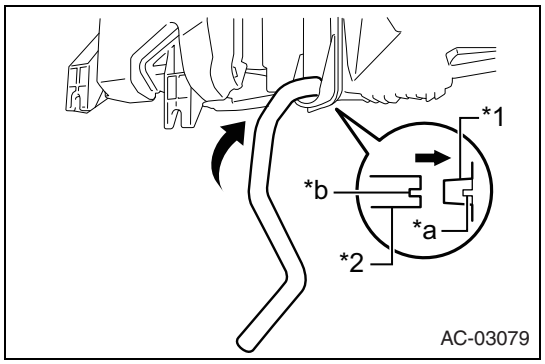

22. Installation of cooler unit drain hose NO.1
    (1) Install the cooler unit drain hose NO.1.

Captions in illustration

*1	Case
*2	Hose
*a	Rib
*b	Cutout portion

NOTE:
Align the cutout with the rib of the case.

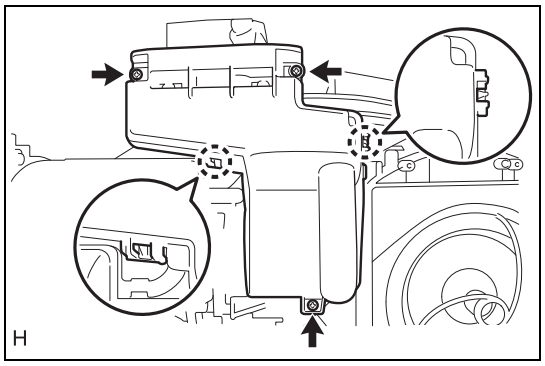

23. Installation of cover
    (1) Fit in the 2 claws.
    (2) Install the cover with the 3 screws.

AC

24. Installation of cooler expansion valve (for automatic air conditioning system)
    (1) Apply sufficient amount of compressor oil (ND-OIL8) to two new O-rings and the fitting area of the cooler expansion valve.

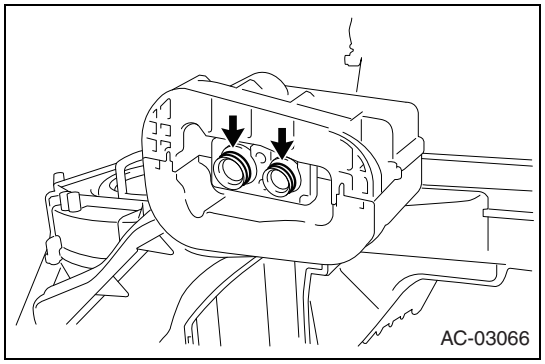

    (2) Install the 2 O-rings on cooler evaporator NO.1.
    CAUTION:
    Do not allow the O-ring and the O-ring seal to have deposit of dirt.

    (3) Install a new cooler expansion valve on the cooler evaporator No.1.

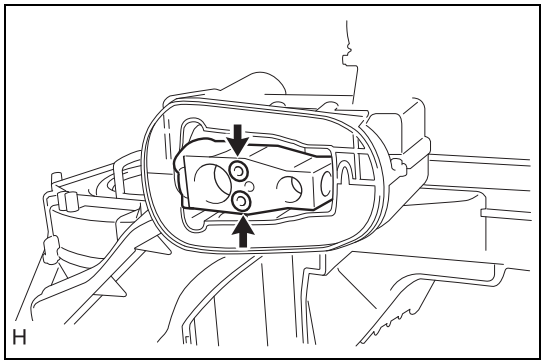

(4) Using hexagon socket wrench 4, install the cooler expansion valve with the 2 new hexagon bolts.
Standard value:T=3.5N·m {36kgf·cm} {2.6ft·lbf}

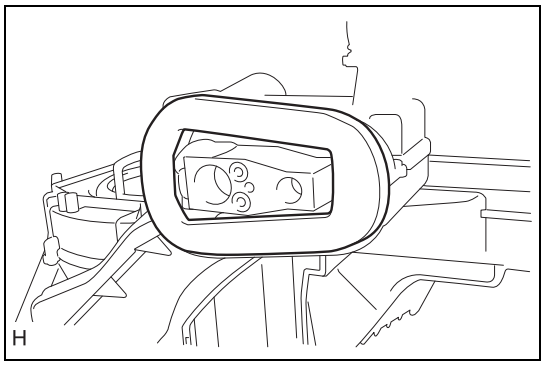

(5) Install a new gasket.

25. Installation of cooler expansion valve (for manual air conditioning system)
NOTE:
Repeat the same installation steps for the automatic air conditioning system.

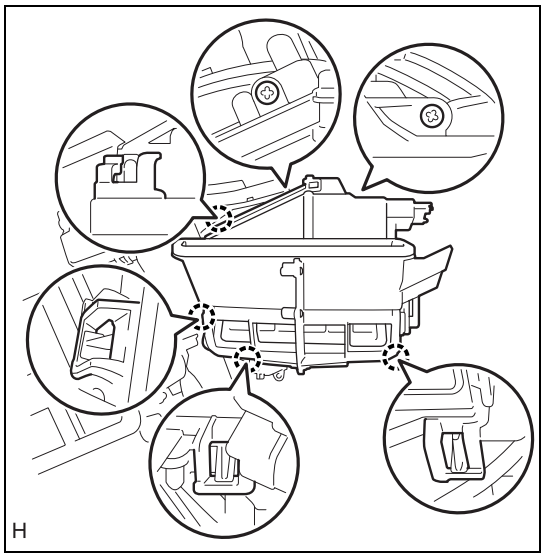

26. Installation of cooling unit case
(1) Fit in the 4 claws.
(2) Install the cooling unit case with the 2 screws.

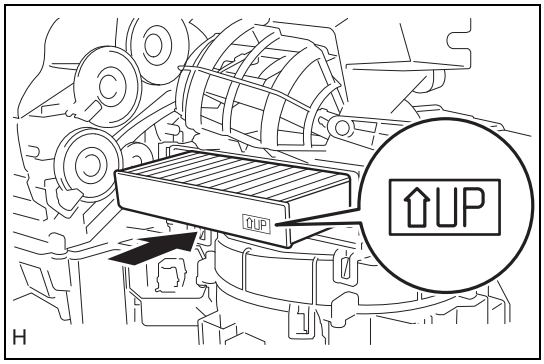

27. Installation of clean air filter
(1) Slide clean air filter in the direction of the arrow in the figure to install it.

AC

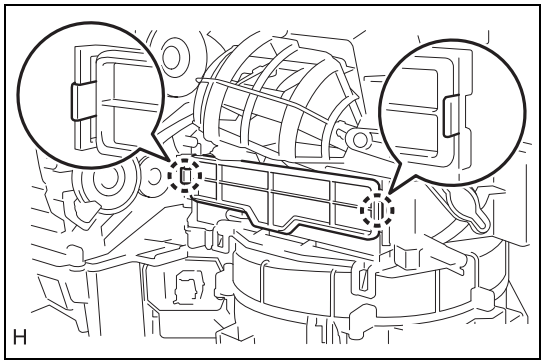

28. Installation of air filter case
    (1) Engage the 2 claws and install the air filter case.

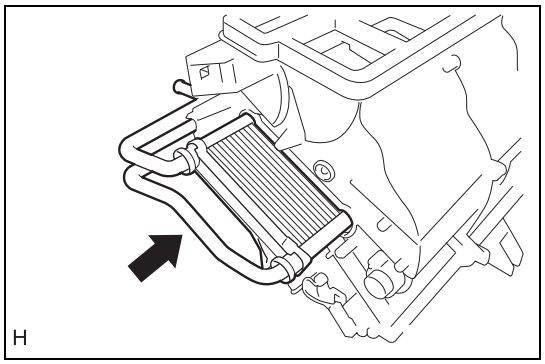

29. Installation of heater radiator unit SUB-ASSY (for automatic air conditioning system)
    (1) Slide the heater radiator unit SUB-ASSY in the direction of the arrow in the figure to install it.

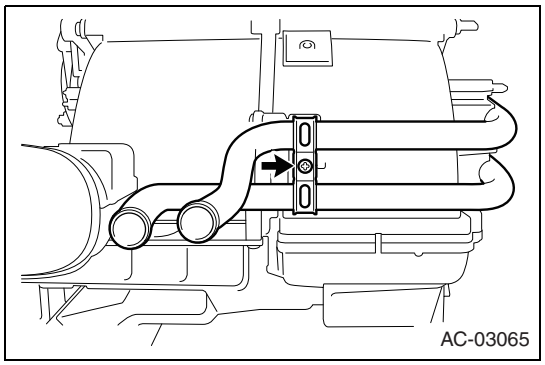

    (2) Install the clamp with the screws.

30. Installation of heater radiator unit SUB-ASSY (for manual air conditioning system)
    NOTE:
    Repeat the same installation steps for the automatic air conditioning system.

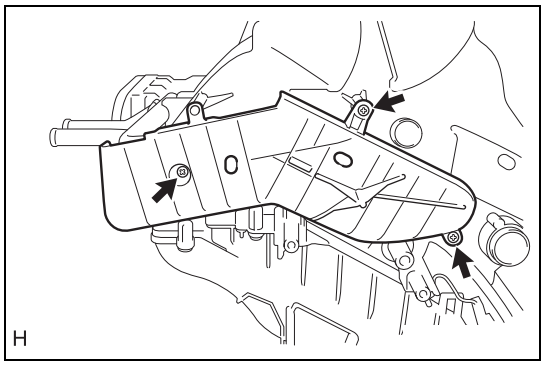

31. Installation of heater cover (for automatic air conditioning system)
    (1) Install the heater cover with the 3 screws.

32. Installation of heater cover (for manual air conditioning system)
    NOTE:
    Repeat the same installation steps for the automatic air conditioning system.

33. Installation of air conditioner radiator damper servo SUB-ASSY NO.5 (for automatic air conditioning system)
    CAUTION:
    - Be careful that dust, dirt, etc. may not stay on grease at the gear during work.
    - Do not hold the gear with cotton gloves.

AC

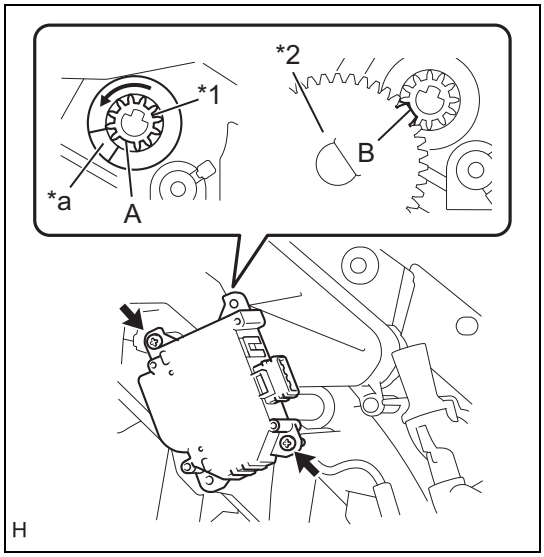

(1) Turn the air mix shaft in the direction of the arrow slowly until it stops.

Captions in illustration

*1	Air mix shaft
*2	Shaft gear
*a	Specified location

CAUTION:
Be careful that it is not turned excessively.

(2) Turn the air mix shaft so that portion A of the air mix shaft is aligned with the reference position of the case.
CAUTION:
Since the air mix shaft can be turned approx. 360°, be careful for the assembly.

(3) Align gear B of air conditioner radiator damper servo SUB-ASSY NO.5 with shaft gear A.
NOTE:
Air mix door position: Near MAX COOL
CAUTION:
Since the air mix shaft can be turned approx. 360°, be careful for the assembly.

(4) Align portion A of the air mix shaft and shaft gear B with the reference position, and install air conditioner radiator damper servo SUB-ASSY NO.5 with the 2 screws.

34. Installation of air conditioner radiator damper servo SUB-ASSY NO.1

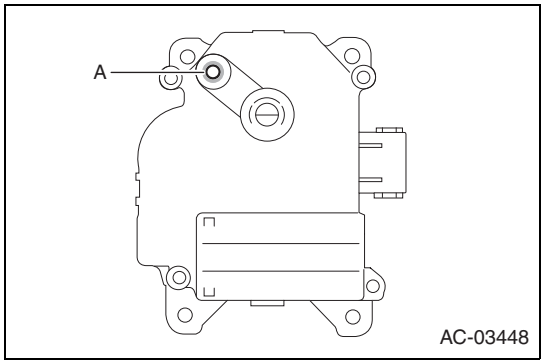

(1) When replacing the air conditioner radiator damper servo SUB-ASSY NO.1 with a new one, apply a thin coat of grease evenly to the side A of the lever pin with the amount of 5 mm out of tube (approx. 0.1 g).

Captions in illustration

	SUBARU genuine grease (Refer to "Preparation items-Air Conditioner")

NOTE:
After the installation of air conditioner radiator damper servo SUB-ASSY NO.1, operate it 3 to 5 times to blend the grease.

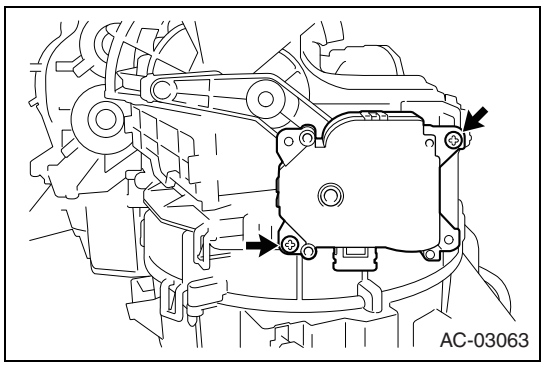

(2) Install air conditioner radiator damper servo SUB-ASSY NO.1 with the 2 screws.

AC

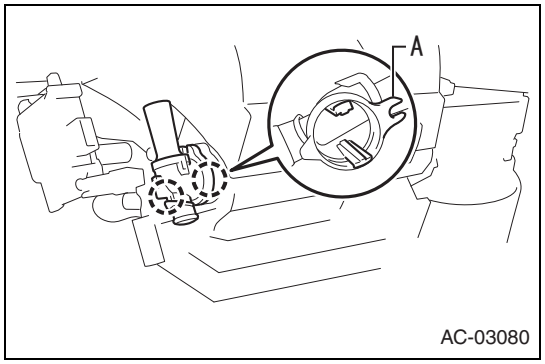

35. Installation of aspirator (for automatic air conditioning system)
    (1) Align the fitting area of the 2 claws and portion A with the pin at the case side, and install the aspirator together with the aspirator pipe.

Installation

1. Installation of air conditioner unit ASSY (for automatic air conditioning system)
    (1) Install the 3 bolts and 3 nuts.
    Standard value:T=7.5N·m {77kgf·cm} {5.5ft·lbf}
    (2) Connect the drain cooler hose.
    (3) Connect the connectors, engage the clamps, and install the air conditioner unit ASSY.
2. Installation of air conditioner unit ASSY (for manual air conditioning system)
    (1) Install the 3 bolts and 3 nuts.
    Standard value:T=7.5N·m {77kgf·cm} {5.5ft·lbf}
    (2) Connect the drain cooler hose.
    (3) Connect the connectors, engage the clamps, and install the air conditioner unit ASSY.
3. Installation of instrument panel reinforcement ASSY

AC

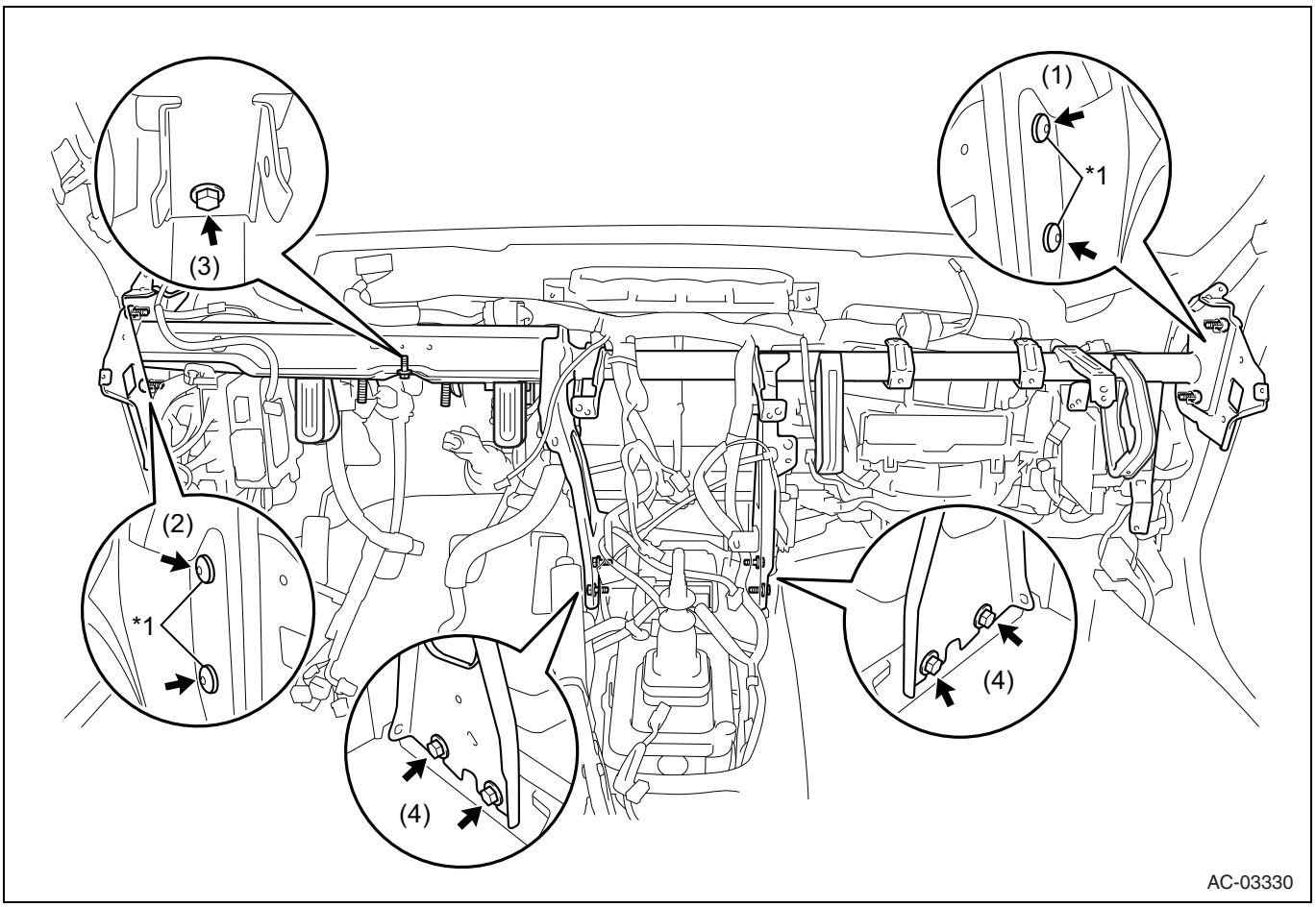

Captions in illustration

*1	Torx bolt	-	-

(1) Using torx socket wrench T40, install the 4 torx bolts in the order shown in the figure.

Standard value:T=25N·m {255kgf·cm} {18.4ft·lbf}

(2) Install the instrument panel reinforcement ASSY with the 5 bolts in the order shown in the figure.
Standard value:T=25N·m {255kgf·cm} {18.4ft·lbf}

(3) Connect the connectors and engage the clamps and claws.

4. Installation of the cowl side trim board RH (Refer to IT - 58)
5. Installation of cowl side trim board LH (Refer to IT - 58)
6. Installation of the front door scuff plate RH (Refer to IT - 58)
7. Installation of front door scuff plate LH (Refer to IT - 58)
8. Installation of steering column ASSY (Refer to SR - 62)
9. Installation of instrument panel SUB-ASSY (Refer to IT - 15)
10. Connection of air conditioner tube & accessory ASSY
    (1) Remove the vinyl tape wrapped around the joint of the air conditioner tube & accessory ASSY and the unit.
    (2) Apply sufficient amount of compressor oil (ND-OIL8) to new O-rings and the joint of the air conditioner tube & accessory ASSY.
    (3) Install the O-ring on the air conditioner tube & accessory ASSY.
    CAUTION:
    Do not allow the O-ring and the O-ring seal to have deposit of dirt.
    (4) Connect the air conditioner tube & accessory ASSY to the air conditioner unit ASSY.
11. Connection of suction hose SUB-ASSY
    (1) Remove the vinyl tape wrapped around the joint of the suction hose and the unit.
    (2) Apply sufficient amount of compressor oil (ND-OIL8) to the new O-ring and the joint of the suction hose SUB-ASSY.
    (3) Install the O-ring on the suction hose SUB-ASSY.
    CAUTION:
    Do not allow the O-ring and the O-ring seal to have deposit of dirt.
    (4) Push the shaft of the pipe joint into the seal hole until it is completely engaged.

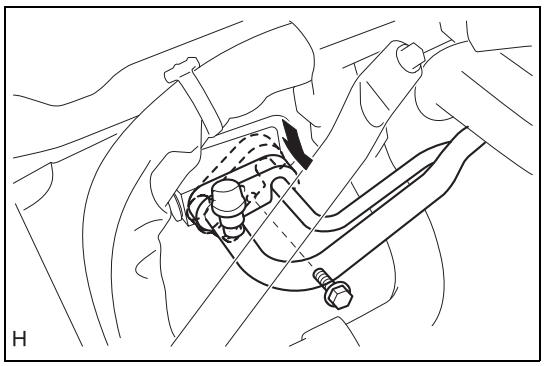

    (5) Turn the hook type connector to the tightening position and tighten it with bolts.
    Standard value:T=7.5N·m {77kgf·cm} {5.5ft·lbf}

12. Connection of heater water hose outlet A
    (1) Install heater water hose outlet A with clips.
    NOTE:
    Install it to the match mark provided at the time of removal.
13. Connection of heater water hose inlet A
    (1) Install heater water hose inlet A with the clips.
    NOTE:
    Install it to the match mark provided at the time of removal.
14. Connection of the battery ground terminal
    Standard value:T=6.0N·m {61kgf·cm} {4.4ft·lbf}
15. Recharge of coolant (Refer to CO - 16)
16. Charging refrigerant HFC-134a (R134a) (Refer to AC - 92)
17. Inspection of coolant leak (Refer to CO - 2)
18. Engine warm-up (Refer to AC - 93)
19. Inspection of refrigerant gas leak (Refer to AC - 93)
20. Inspection of airbag warning light (Refer to RS - 53)

21. Settings when removing/installing battery terminals (Refer to IN - 10)

FRESH / RECIRC door actuator

Exploded view

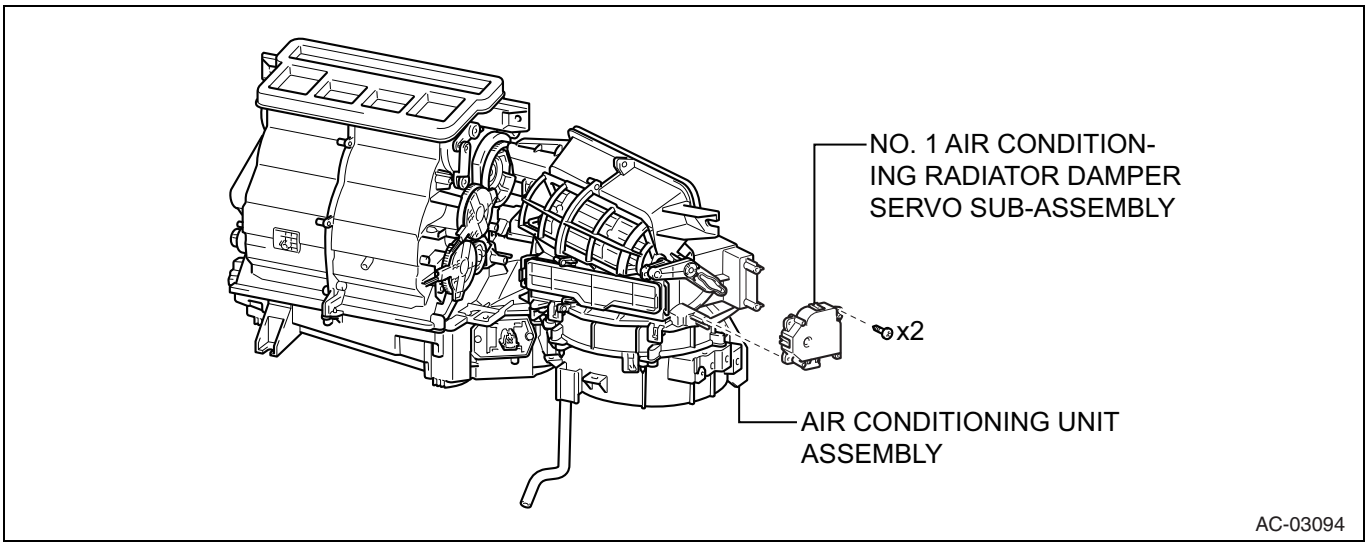

Removal

1. Disconnection of the battery ground terminal (Refer to IN - 6)
2. Removal of console box ASSY (Refer to IT - 33)
3. Removal of the instrument panel ornament (Refer to IT - 22)
4. Removal of instrument cluster finish panel SUB-ASSY CTR (Refer to IT - 23)
5. Removal of instrument cluster finish panel garnish NO.1 (Refer to IT - 23)
6. Removal of instrument cluster finish panel garnish NO.2 (Refer to IT - 24)
7. Removal of air conditioner control ASSY (Refer to AC - 170)
8. Removal of the instrument side panel RH (Refer to IT - 24)
9. Removal of glove compartment door ASSY (Refer to IT - 25)
10. Removal of instrument panel SUB-ASSY LWR (Refer to IT - 26)

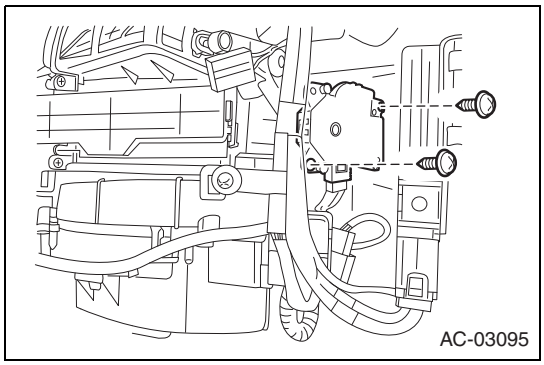

11. Removal of air conditioner radiator damper servo SUB-ASSY NO.1
    (1) Disconnect the connector.
    (2) Remove the 2 screws and remove air conditioner radiator damper servo SUB-ASSY NO.1.

Installation

1. Installation of air conditioner radiator damper servo SUB-ASSY NO.1

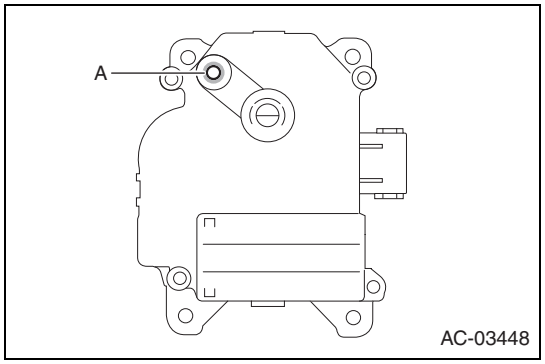

(1) When replacing the air conditioner radiator damper servo SUB-ASSY NO.1 with a new one, apply a thin coat of grease evenly to the side A of the lever pin with the amount of 5 mm out of tube (approx. 0.1 g).

Captions in illustration

	SUBARU genuine grease (Refer to "Preparation items-Air Conditioner")

NOTE:
After the installation of air conditioner radiator damper servo SUB-ASSY NO.1, operate it 3 to 5 times to blend the grease.

(2) Install air conditioner radiator damper servo SUB-ASSY NO.1 with the 2 screws.
(3) Connect the connector.

2. Installation of instrument panel SUB-ASSY LWR (Refer to IT - 29)
3. Installation of glove compartment door ASSY (Refer to IT - 29)
4. Installation of the instrument side panel RH (Refer to IT - 29)
5. Installation of air conditioner control ASSY (Refer to AC - 171)
6. Installation of instrument cluster finish panel garnish NO.2 (Refer to IT - 29)
7. Installation of instrument cluster finish panel garnish NO.1 (Refer to IT - 29)
8. Installation of instrument cluster finish panel SUB-ASSY CTR (Refer to IT - 29)
9. Installation of the instrument panel ornament (Refer to IT - 29)
10. Installation of console box ASSY (Refer to IT - 38)
11. Connection of the battery ground terminal
    Standard value:T=6.0N·m {61kgf·cm} {4.4ft·lbf}
12. Settings when removing/installing battery terminals (Refer to IN - 10)

AC

Unit inspection

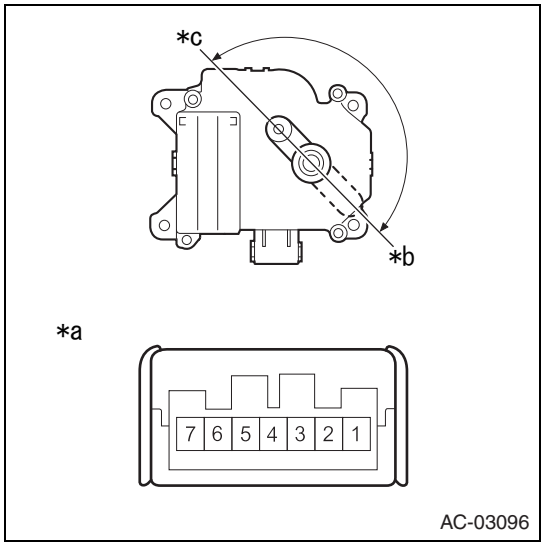

1. Inspection of air conditioner radiator damper servo SUB-ASSY NO.1
   (1) Operation inspection
   (a)Check operation when battery voltage is applied between connector terminals of the air conditioner radiator damper servo SUB-ASSY NO.1.

Criteria

Battery connection	Criteria
Battery positive →7 Battery ground →1	RECIRC position, rotates in the direction of the arrow in the figure.
Battery positive →7 Battery ground →3	FRESH position, rotates in the direction of the arrow in the figure.

Captions in illustration

*a	Connector not connected (Air conditioner radiator damper servo SUB-ASSY NO.1)
*b	RECIRC
*c	FRESH

Mode door actuator

Exploded view

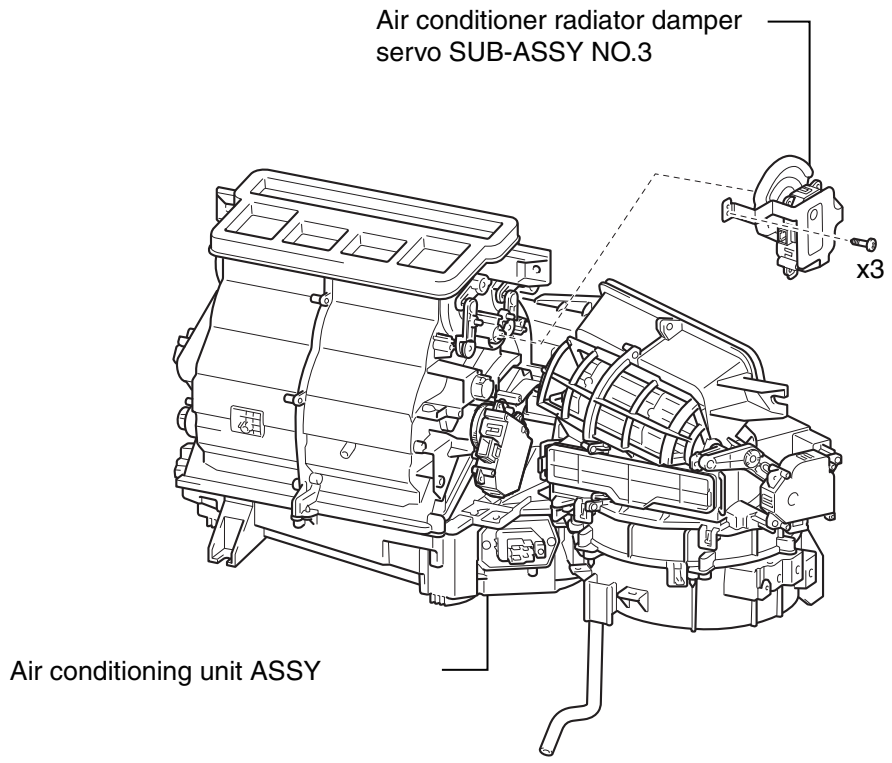

Removal

WARNING:

The following service operations include the works which may affect the SRS airbag system. Before starting work, always be sure to confirm the precautions related to the SRS airbag system. (Refer to RS - 5)

1. Precautions
   CAUTION:
   After turning the ignition switch to OFF, you may have to wait for a while before disconnecting the battery terminals. Check appropriate precautions for battery terminal disconnection before proceeding. (Refer to IN - 6)
2. Disconnection of the battery ground terminal
   (1) Turn the ignition switch to OFF, disconnect the battery ground terminal, and then wait for 60 seconds before starting the work.
   WARNING:
   The air bag and pretensioner system are fitted with a backup power supply. If you start the work within 60 seconds after disconnecting the battery ground terminal, the air bag may be activated.
   CAUTION:
   To avoid damage to the molding, be sure to fully open the door glasses on both driver's and passenger's sides.
3. Removal of instrument panel SUB-ASSY (Refer to IT - 5)
4. Removal of steering column ASSY (Refer to SR - 54)
5. Removal of the front door scuff plate RH (Refer to IT - 48)
6. Removal of front door scuff plate LH (Refer to IT - 48)
7. Removal of the cowl side trim board RH (Refer to IT - 48)
8. Removal of cowl side trim board LH (Refer to IT - 48)
9. Removal of instrument panel reinforcement ASSY (Refer to AC - 102)

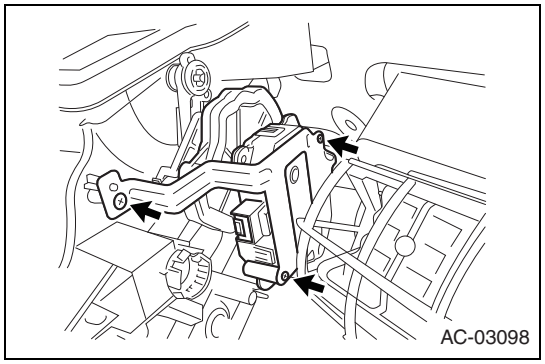

10. Removal of air conditioner radiator damper servo SUB-ASSY NO.3
    (1) Remove the 3 screws and remove air conditioner radiator damper servo SUB-ASSY NO.3.

Installation

1. Installation of air conditioner radiator damper servo SUB-ASSY NO.3

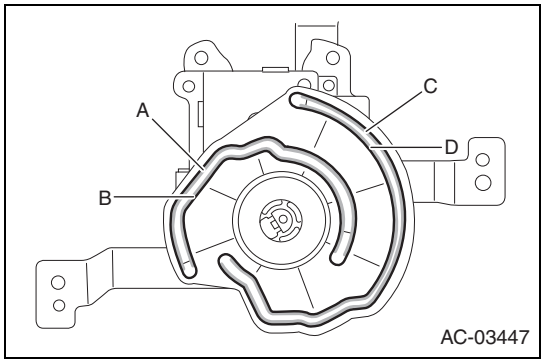

    (1) When replacing the air conditioner radiator damper servo SUB-ASSY NO.3 with a new one, apply a thin coat of grease evenly to the working surface A inside the link plate rail with the amount of 5 mm out of the tube (approx. 0.1 g). Similarly, apply a thin coat of grease with the same amount also evenly on the working surface B to D.

Captions in illustration

	SUBARU genuine grease (Refer to "Preparation items-Air Conditioner")

NOTE:
After the installation of air conditioner radiator damper servo SUB-ASSY NO.3, operate it 3 to 5 times to blend the grease.

    (2) Install air conditioner radiator damper servo SUB-ASSY NO.3 with the 3 screws.
2. Installation of instrument panel reinforcement ASSY (Refer to AC - 126)
3. Installation of the cowl side trim board RH (Refer to IT - 58)
4. Installation of cowl side trim board LH (Refer to IT - 58)
5. Installation of the front door scuff plate RH (Refer to IT - 58)
6. Installation of front door scuff plate LH (Refer to IT - 58)
7. Installation of steering column ASSY (Refer to SR - 62)
8. Installation of instrument panel SUB-ASSY (Refer to IT - 15)
9. Connection of the battery ground terminal
   Standard value:T=6.0N·m {61kgf·cm} {4.4ft·lbf}
10. Settings when removing/installing battery terminals (Refer to IN - 10)

Unit inspection

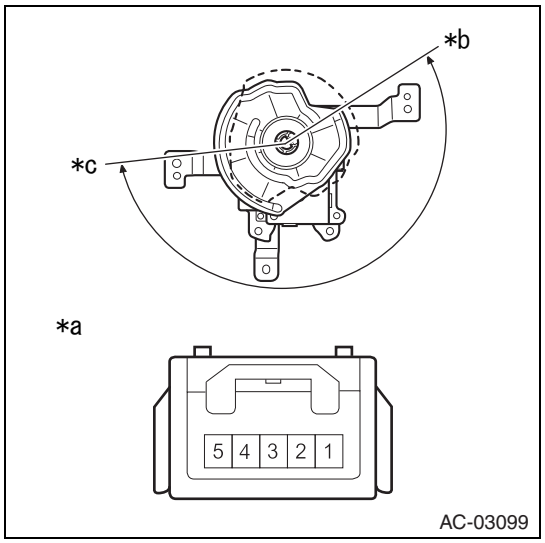

1. Inspection of air conditioner radiator damper servo SUB-ASSY NO.3
   (1) Operation inspection
      (a)Check the operation when battery voltage is applied between connector terminals of the air conditioner radiator damper servo SUB-ASSY NO.3.

Criteria

Battery connection	Criteria
Battery positive →4 Battery ground →5	DEF position, rotates in the direction of the arrow in the figure.
Battery positive →5 Battery ground →4	FACE position, rotates in the direction of the arrow in the figure.

Captions in illustration

*a	Connector not connected (Air conditioner radiator damper servo SUB-ASSY NO.3)
*b	FACE
*c	DEF

   (2) Resistance check
      (a)Measure the resistance between connector terminals of air conditioner radiator damper servo SUB-ASSY NO.3.

Resistance

Inspection terminals	Inspection conditions	Standard value
1 - 2	Always	4.2 to 7.8Ω

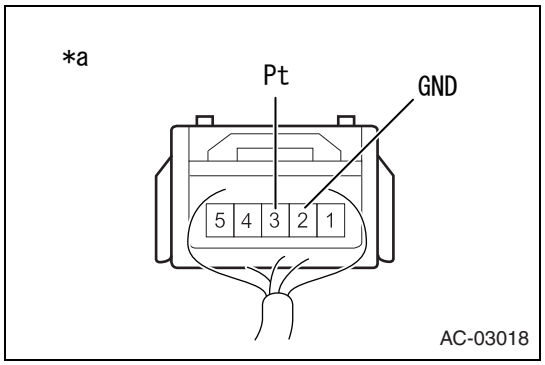

   (3) Voltage inspection
      (a)Connect the harness connector to air conditioner radiator damper servo SUB-ASSY NO.3 and measure the voltage between terminals with IG ON.

Voltage

Inspection terminals	Inspection conditions	Standard value
Battery positive →3 Battery ground →1	FACE	Approx. 4.5V
	DEF	Approx. 0.5V

Captions in illustration

*a	Connector connected (Air conditioner radiator damper servo SUB-ASSY NO.3)

AC

Air mix door actuator

Exploded view

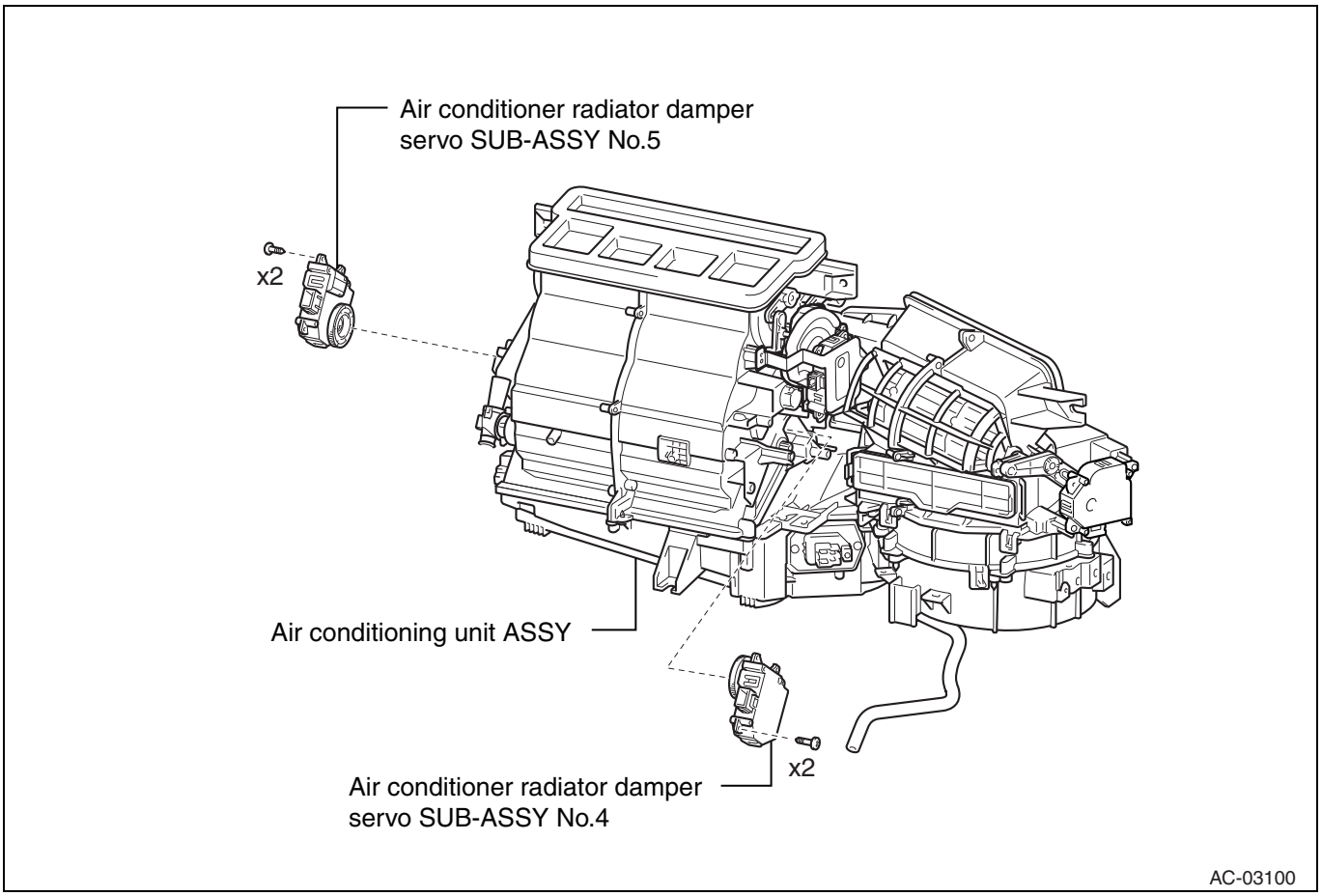

AC

Removal

1. Disconnection of the battery ground terminal (Refer to IN - 6)
2. Removal of the instrument side panel LH (Refer to IT - 24)
3. Removal of the instrument panel under cover SUB-ASSY No. 1 (Refer to ME - 68)

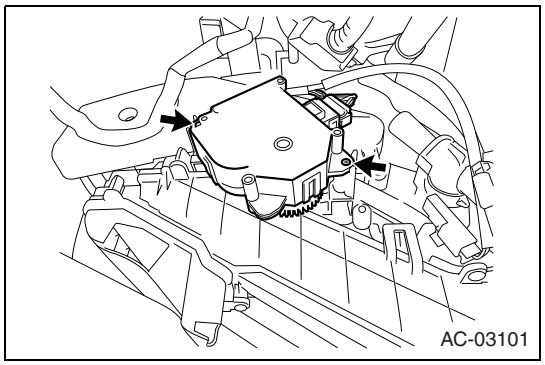

4. Removal of air conditioner radiator damper servo SUB-ASSY NO.5 (driver's seat side)
   (1) Disconnect the connector.
   (2) Remove the 2 screws and remove air conditioner radiator damper servo SUB-ASSY NO.5.
   CAUTION:
   When reusing air conditioner radiator damper servo SUB-ASSY NO.5, set the controller position to MAXCOOL on the vehicle before removal and save it for 30 seconds after setting.
5. Removal of console box ASSY (Refer to IT - 33)
6. Removal of the instrument panel ornament (Refer to IT - 22)
7. Removal of instrument cluster finish panel SUB-ASSY CTR (Refer to IT - 23)
8. Removal of instrument cluster finish panel garnish NO.1 (Refer to IT - 23)
9. Removal of instrument cluster finish panel garnish NO.2 (Refer to IT - 24)
10. Removal of air conditioner control ASSY (Refer to AC - 170)
11. Removal of the instrument side panel RH (Refer to IT - 24)
12. Removal of glove compartment door ASSY (Refer to IT - 25)

13. Removal of instrument panel SUB-ASSY LWR (Refer to IT - 26)

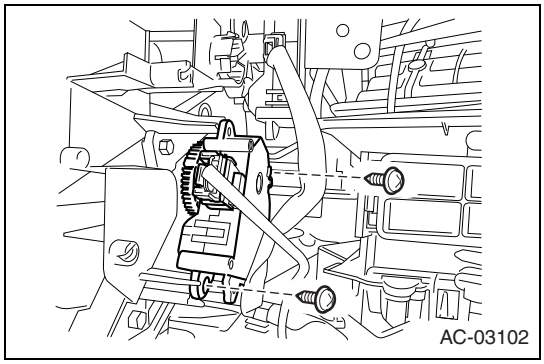

14. Removal of air conditioner radiator damper servo SUB-ASSY NO.4 (passenger's seat side)
    (1) Disconnect the connector.
    (2) Remove the 2 screws and remove air conditioner radiator damper servo SUB-ASSY NO.4.
    CAUTION:
    When reusing air conditioner radiator damper servo SUB-ASSY NO.4, set the controller position to the servo motor opening angle 32.42 % on the vehicle before removal and hold it for 30 seconds after setting.

Installation

1. Installation of air conditioner radiator damper servo SUB-ASSY NO.4 (passenger's seat side)
   CAUTION:
   - Be careful that dust, dirt, etc. may not stay on grease at the gear during work.
   - Do not hold the gear with cotton gloves.

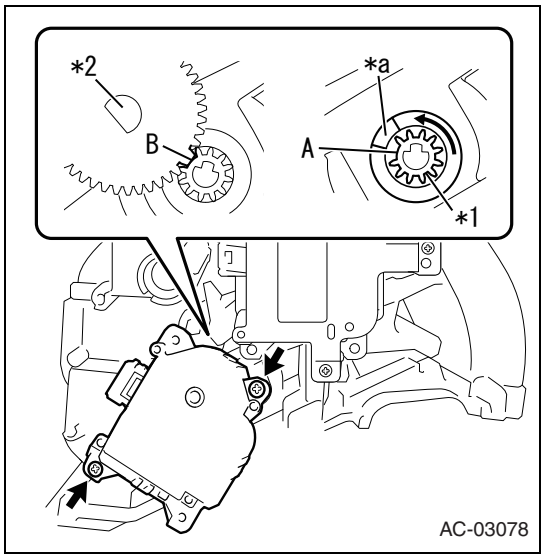

   (1) Turn the air mix shaft in the direction of the arrow slowly until it stops.

Captions in illustration

*1	Air mix shaft
*2	Shaft gear
*a	Specified location

   CAUTION:
   Be careful that it is not turned excessively.

   (2) Turn the air mix shaft so that portion A of the air mix shaft is aligned with the reference position of the case.
   CAUTION:
   Since the air mix shaft can be turned approx. 360°, be careful for the assembly.
   (3) Align gear B of air conditioner radiator damper servo SUB-ASSY NO.4 with shaft gear A.
   CAUTION:
   Since the air mix shaft can be turned approx. 360°, be careful for the assembly.
   (4) Align potion A of the air mix shaft and shaft gear B with the reference position, and install air conditioner radiator damper servo SUB-ASSY NO.4 with the 2 screws.
2. Installation of instrument panel SUB-ASSY LWR (Refer to IT - 29)
3. Installation of glove compartment door ASSY (Refer to IT - 29)
4. Installation of the instrument side panel RH (Refer to IT - 29)
5. Installation of air conditioner control ASSY (Refer to AC - 171)
6. Installation of instrument cluster finish panel garnish NO.2 (Refer to IT - 29)
7. Installation of instrument cluster finish panel garnish NO.1 (Refer to IT - 29)
8. Installation of instrument cluster finish panel SUB-ASSY CTR (Refer to IT - 29)
9. Installation of the instrument panel ornament (Refer to IT - 29)
10. Installation of console box ASSY (Refer to IT - 38)

11. Installation of air conditioner radiator damper servo SUB-ASSY NO.5 (driver's seat side)
    CAUTION:
    - Be careful that dust, dirt, etc. may not stay on grease at the gear during work.
    - Do not hold the gear with cotton gloves.

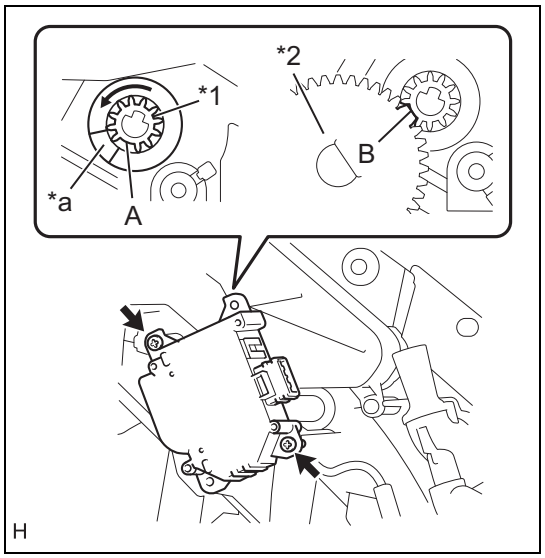

(1) Turn the air mix shaft in the direction of the arrow slowly until it stops.

Captions in illustration

*1	Air mix shaft
*2	Shaft gear
*a	Specified location

CAUTION:
Be careful that it is not turned excessively.

(2) Turn the air mix shaft so that portion A of the air mix shaft is aligned with the reference position of the case.
CAUTION:
Since the air mix shaft can be turned approx. 360°, be careful for the assembly.

(3) Align gear B of air conditioner radiator damper servo SUB-ASSY NO.5 with shaft gear A.
CAUTION:
Since the air mix shaft can be turned approx. 360°, be careful for the assembly.

(4) Align portion A of the air mix shaft and shaft gear B with the reference position, and install air conditioner radiator damper servo SUB-ASSY NO.5 with the 2 screws.

12. Installation of the instrument panel under cover SUB-ASSY No.1 (Refer to ME - 69)
13. Installation of the instrument side panel LH (Refer to IT - 29)
14. Connection of the battery ground terminal
    Standard value:T=6.0N·m {61kgf·cm} {4.4ft·lbf}
15. Settings when removing/installing battery terminals (Refer to IN - 10)

AC

Unit inspection

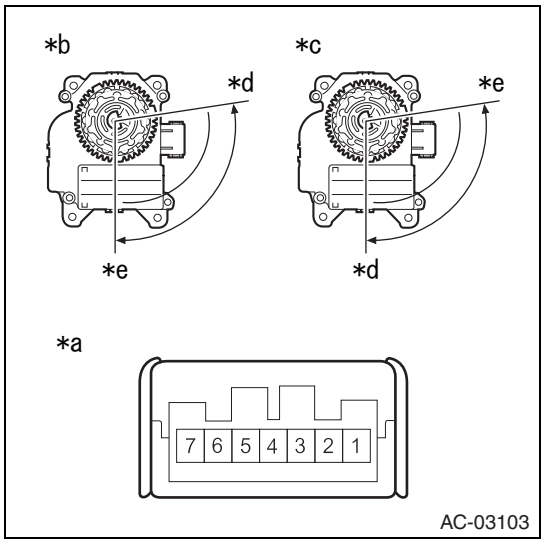

1. Inspection of air conditioner radiator damper servo SUB-ASSY NO.5 (driver's seat side) and NO.4 (passenger's seat side)
   (1) Operation inspection
   (a)Check the operation when battery voltage is applied between connector terminals of the air conditioner radiator damper servo SUB-ASSY NO.5 (driver's seat side) and NO.4 (passenger's seat side).

Criteria

Battery connection	Criteria
Battery positive →6 Battery ground →7	HOT position (driver's seat side), rotates in the direction of the arrow in the figure. COOL position (passenger's seat side), rotates in the direction of the arrow in the figure.
Battery positive →7 Battery ground →6	HOT position (passenger's seat side), rotates in the direction of the arrow in the figure. COOL position (driver's seat side), rotates in the direction of the arrow in the figure.

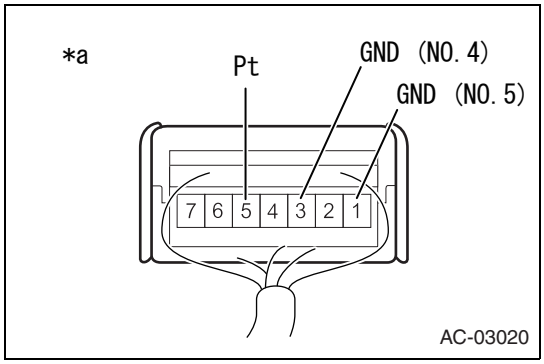

Captions in illustration

*a	Connector not connected (Air conditioner radiator damper servo SUB-ASSY NO.5 and NO.4)
*b	Driver's side
*c	Passenger's side
*d	MAX COOL
*e	MAX HOT

(2) Resistance check

(a)Measure the resistance between connector terminals of air conditioner radiator damper servo SUB-ASSY NO.5 (driver's seat side) and NO.4 (passenger's seat side).

Resistance

Inspection terminals	Inspection conditions	Standard value
1 - 3	Always	4.2 to 7.8Ω

(3) Voltage inspection

(a)Connect the harness connector to air conditioner radiator damper servo SUB-ASSY NO.5 (driver's seat side) and NO.4 (passenger's seat side), and measure the voltage between terminals with IG ON.

Voltage

Inspection terminals	Inspection conditions	Standard value
Battery positive →5 Battery ground →1	HOT (driver's seat side)	Approx. 1.0V
	COOL (driver's seat side)	Approx. 4.3V
Battery positive →5 Battery ground →3	HOT (passenger's seat side)	Approx. 0.7V
	COOL (passenger's seat side)	Approx. 4.0V

Captions in illustration

*a	Connector connected (Air conditioner radiator damper servo SUB-ASSY NO.5 and NO.4)

AC

Front blower motor (with fan)

Exploded view

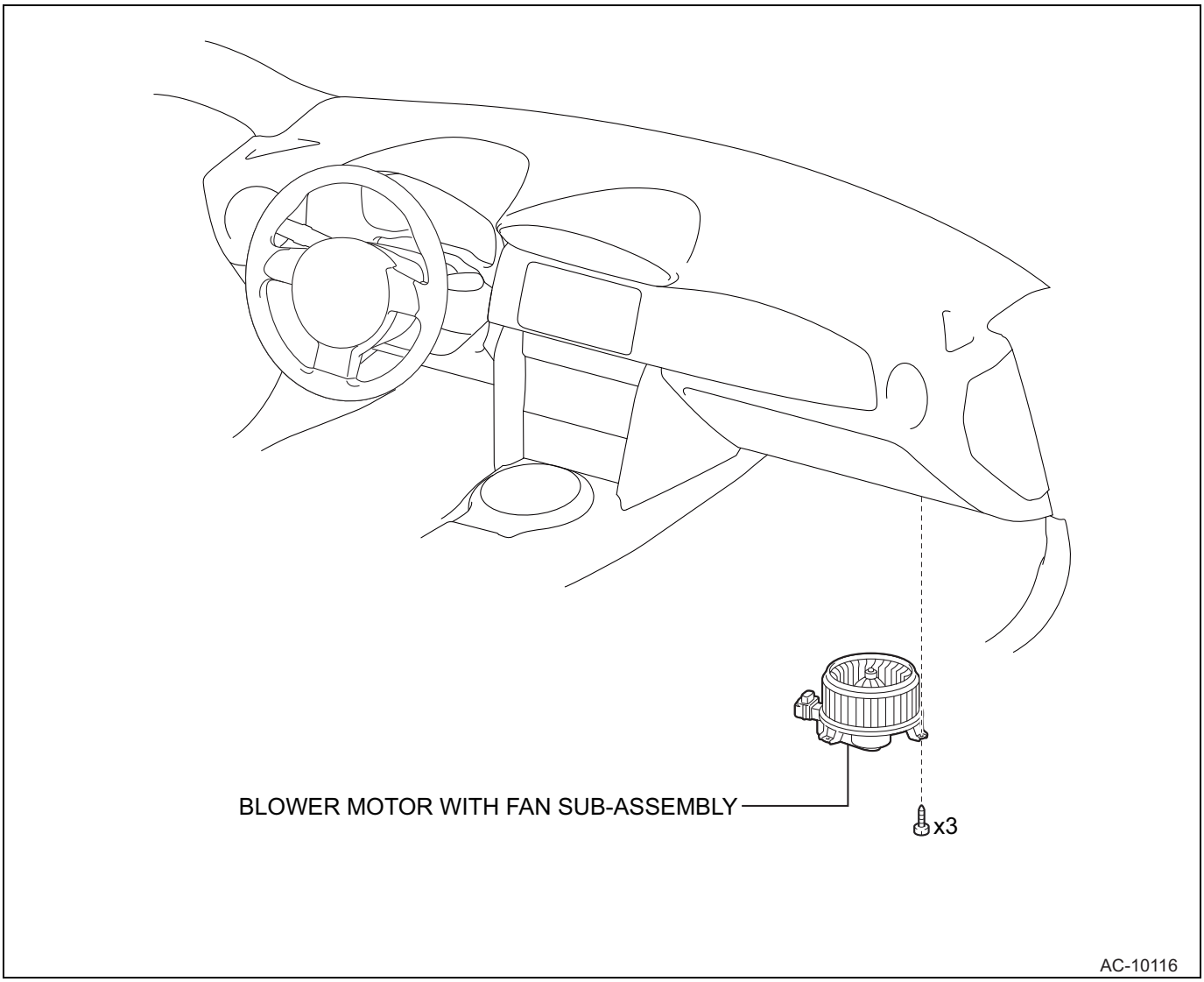

AC

Removal

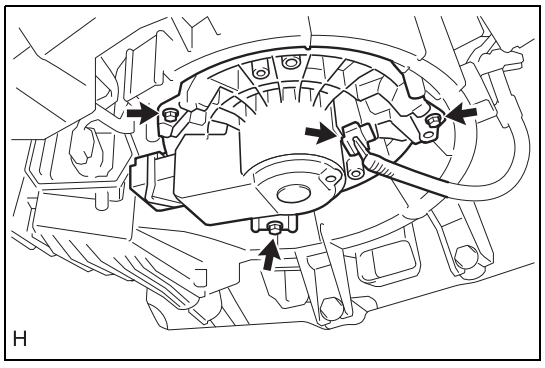

1. Removal of blower motor SUB-ASSY (with fan)
   (1) Disconnect the connector.
   (2) Remove the 3 screws and remove the blower motor SUB-ASSY (with fan).

Installation

1. Installation of blower motor SUB-ASSY (with fan)
   (1) Install the blower motor SUB-ASSY (with fan) with the 3 screws.
   (2) Connect the connector.

Unit inspection

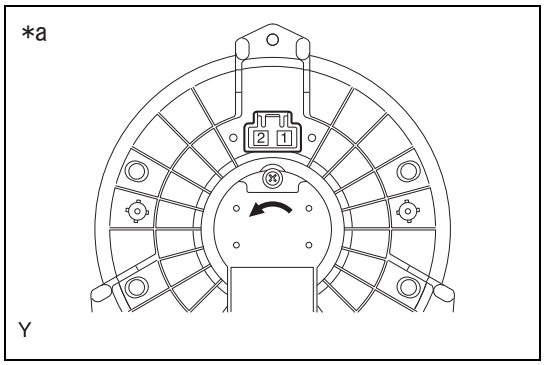

1. Inspection of blower motor SUB-ASSY (with fan)
   (1) Operation inspection
      (a)Check operation when battery voltage is applied between the connector terminals of the blower motor SUB-ASSY (with fan).

Criteria

Battery connection	Criteria
Battery positive →2 Battery ground →1	The motor rotates in the direction of the arrow in the figure without abnormal noise.

Captions in illustration

*a	Connector not connected (Blower motor SUB-ASSY (with fan))

AC

Blower resistor

Exploded view

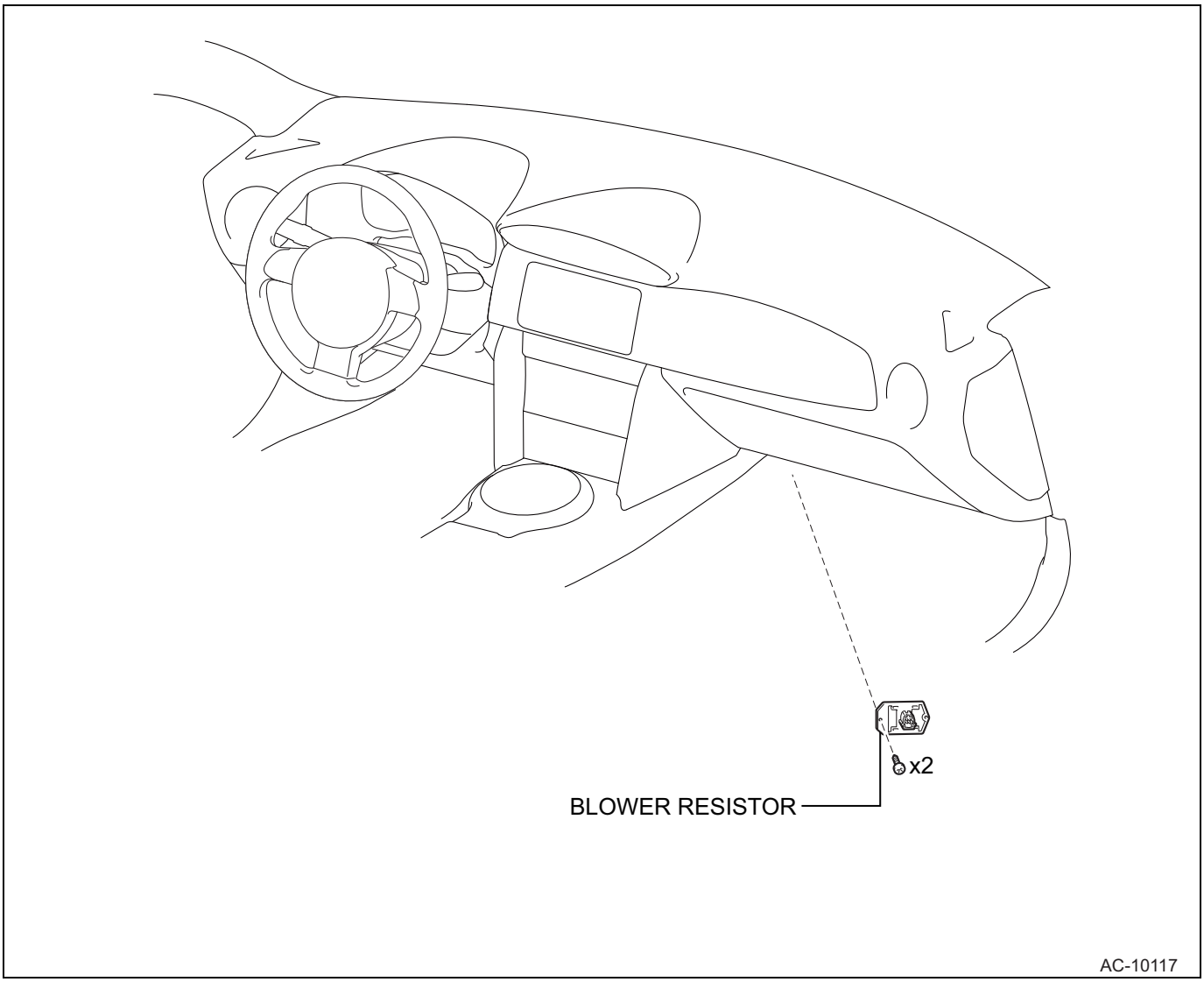

AC

Removal

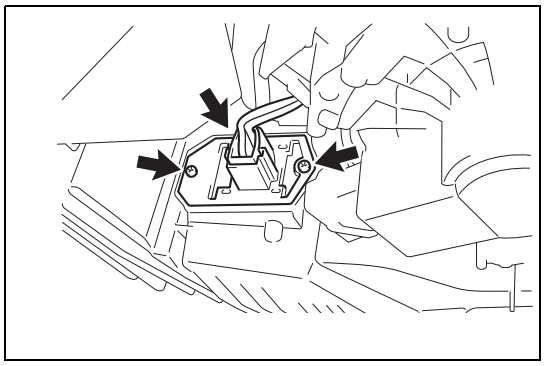

1. Removal of blower register
   (1) Disconnect the connector.
   (2) Remove the 2 screws and remove the blower register.

Installation

1. Installation of blower register
   (1) Install the blower register with the 2 screws.
   (2) Connect the connector.

Unit inspection

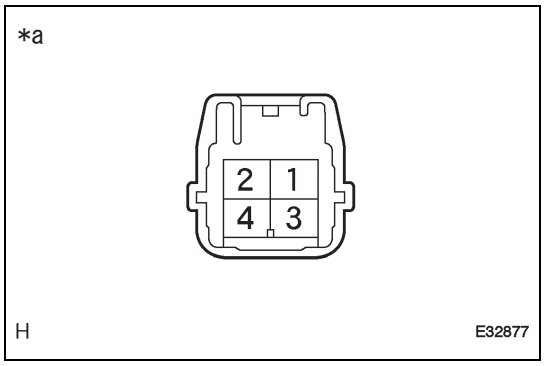

1. Check of blower resistor
   (1) Resistance inspection
      (a)Check the resistance between the connector terminals.

Resistance

Terminal No.	Inspection conditions	Standard value
1 - 4	Always	2.92 Ω
1 - 3	Always	0.44 Ω
1 - 2	Always	1.12 Ω

NOTE:
Temperature fuse is present between terminals 1 and 3.

Captions in illustration

*a	Connector not connected (Blower resistor)

AC

Cooler expansion valve

Exploded view

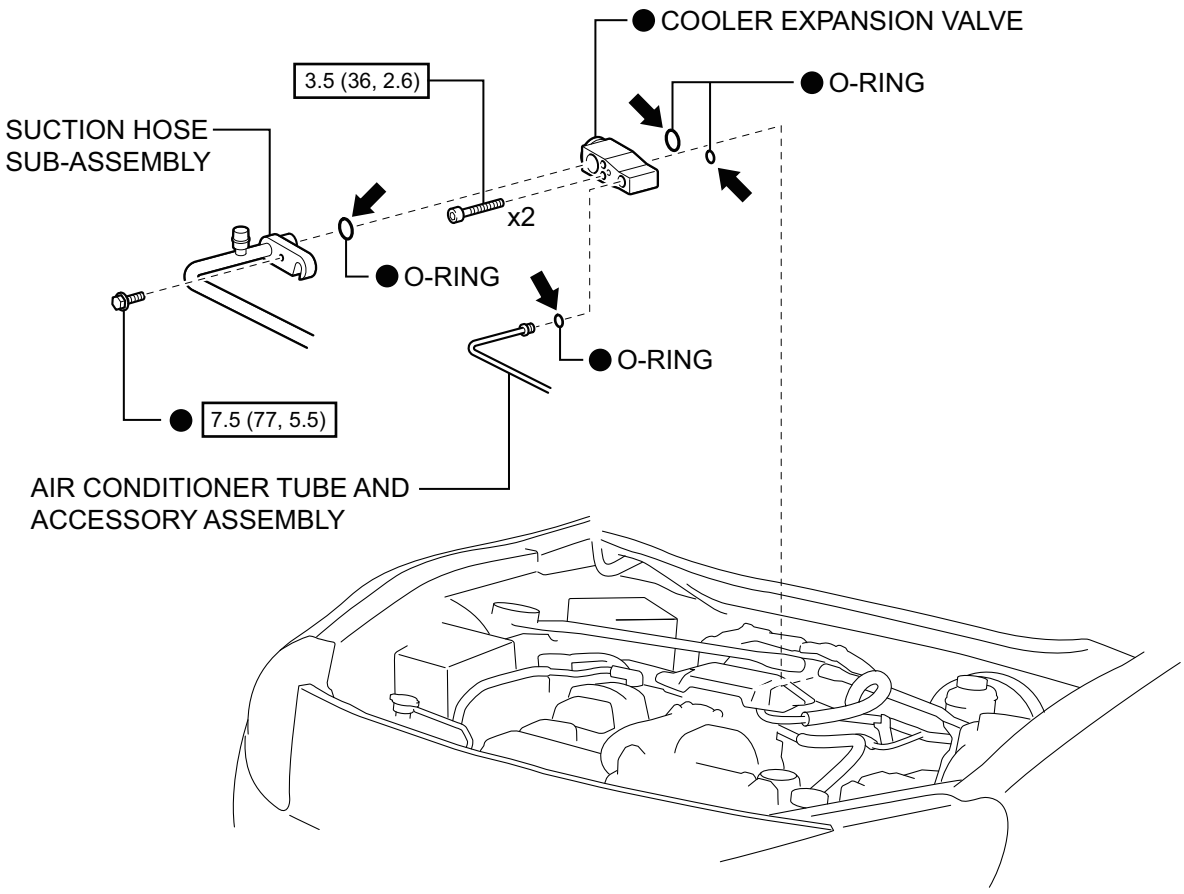

N*m (kgf*cm, ft*lbf) : Specified torque

● Non-reusable part ⬅ Compressor oil ND-OIL 8 or equivalent

AC-03082

AC

Removal

CAUTION:

When removing the cooler expansion valve individually, be sure to replace the mounting bolts of the cooler expansion valve and the suction hose SUB-ASSY with new ones.

1. Discharge of refrigerant HFC-134a (R134a) (Refer to AC - 92)
2. Disconnection of suction hose SUB-ASSY (Refer to AC - 102)
3. Disconnection of air conditioner tube & accessory ASSY (Refer to AC - 102)

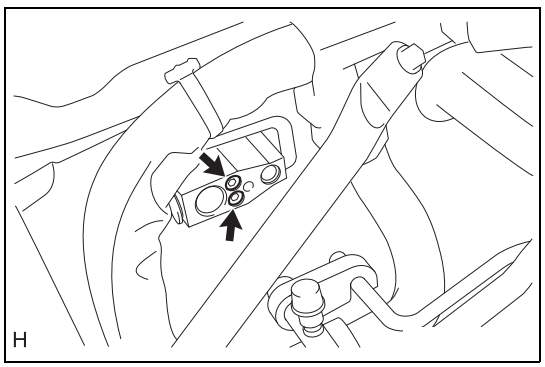

4. Removal of cooler expansion valve
   (1) Using hexagon wrench 4, remove the 2 hexagon bolts.

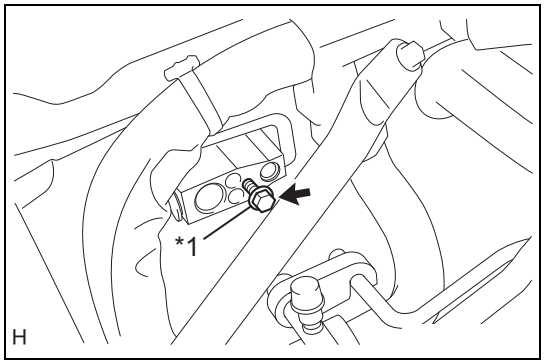

(2) Insert about a half of the suction hose mounting bolt into the cooler expansion valve.

Captions in illustration

*1	Mounting bolt of suction hose

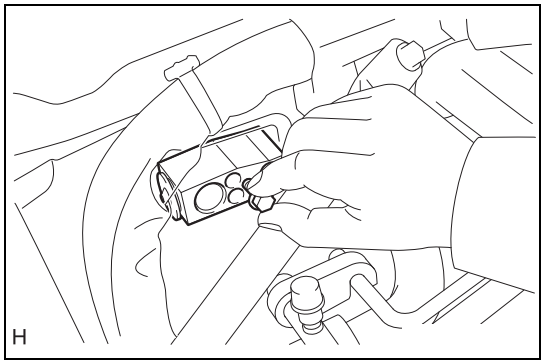

(3) Hold the bolt as shown in the figure and remove the cooler expansion valve.

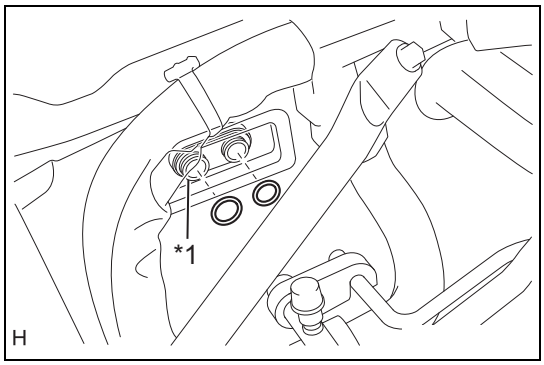

(4) Remove the 2 O-rings from the cooler evaporator.

Captions in illustration

*1	Cooler evaporator

AC

Installation

CAUTION:

When removing the cooler expansion valve individually, be sure to replace the mounting bolts of the cooler expansion valve and the suction hose SUB-ASSY with new ones.

1. Installation of cooler expansion valve
   (1) Apply sufficient amount of compressor oil (ND-OIL8) to 2 new O-rings and the fitting area of the new cooler expansion valve.
   (2) Install the 2 O-rings on cooler evaporator NO.1.
   CAUTION:
   Do not allow the O-ring and the O-ring seal to have deposit of dirt.
   (3) Install a new cooler expansion valve on cooler evaporator NO.1.
   (4) Using hexagon wrench 4, install a new cooler expansion valve with the 2 hexagon bolts.
   Standard value:T=3.5N·m {36kgf·cm} {2.6ft·lbf}
2. Connection of air conditioner tube & accessory ASSY (Refer toAC - 127)
3. Connection of suction hose SUB-ASSY (Refer to AC - 127)
4. Charging refrigerant HFC-134a (R134a) (Refer to AC - 92)
5. Engine warm-up (Refer to AC - 93)
6. Inspection of refrigerant gas leak (Refer to AC - 93)

Compressor ASSY

Exploded view

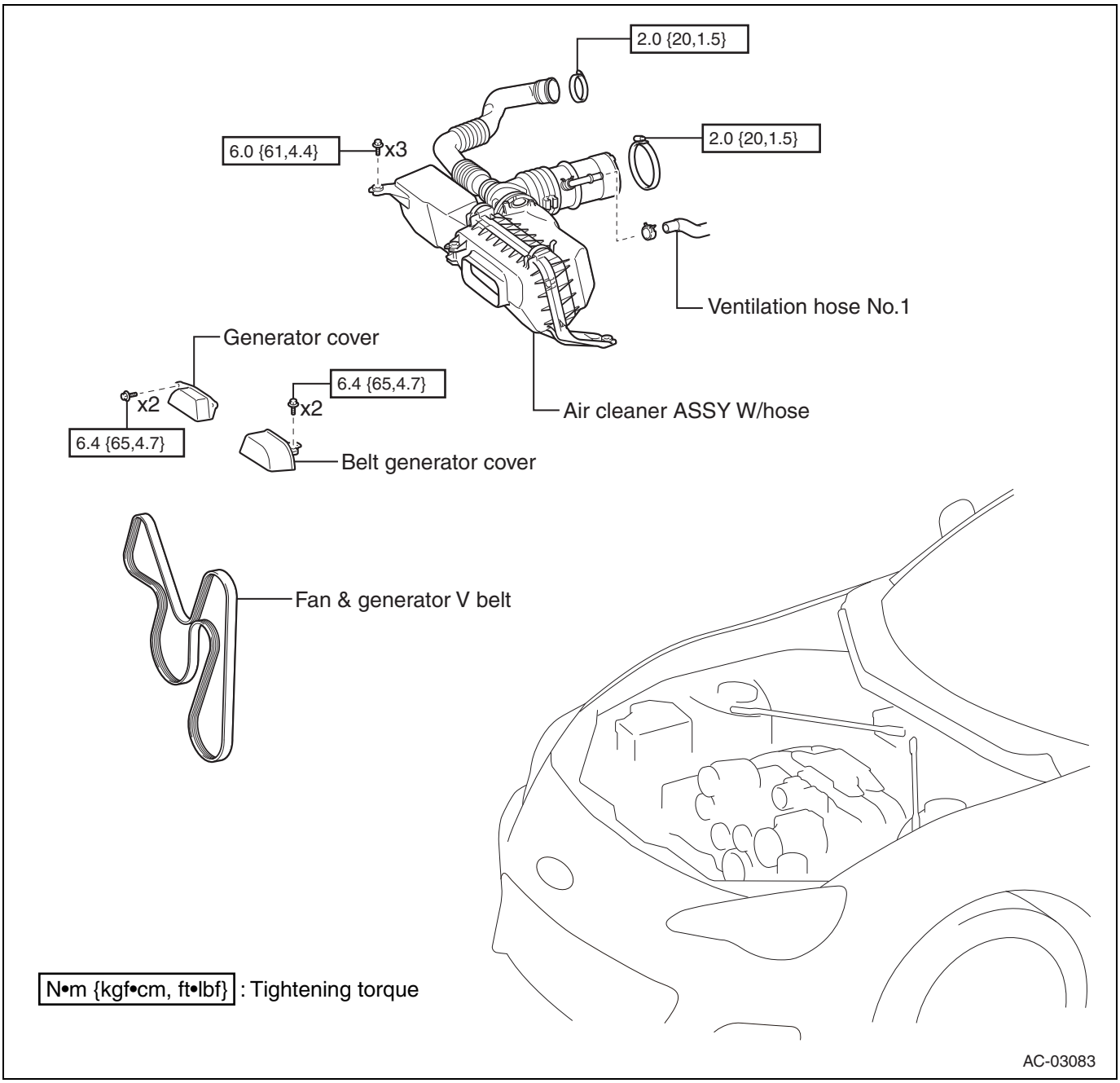

AC

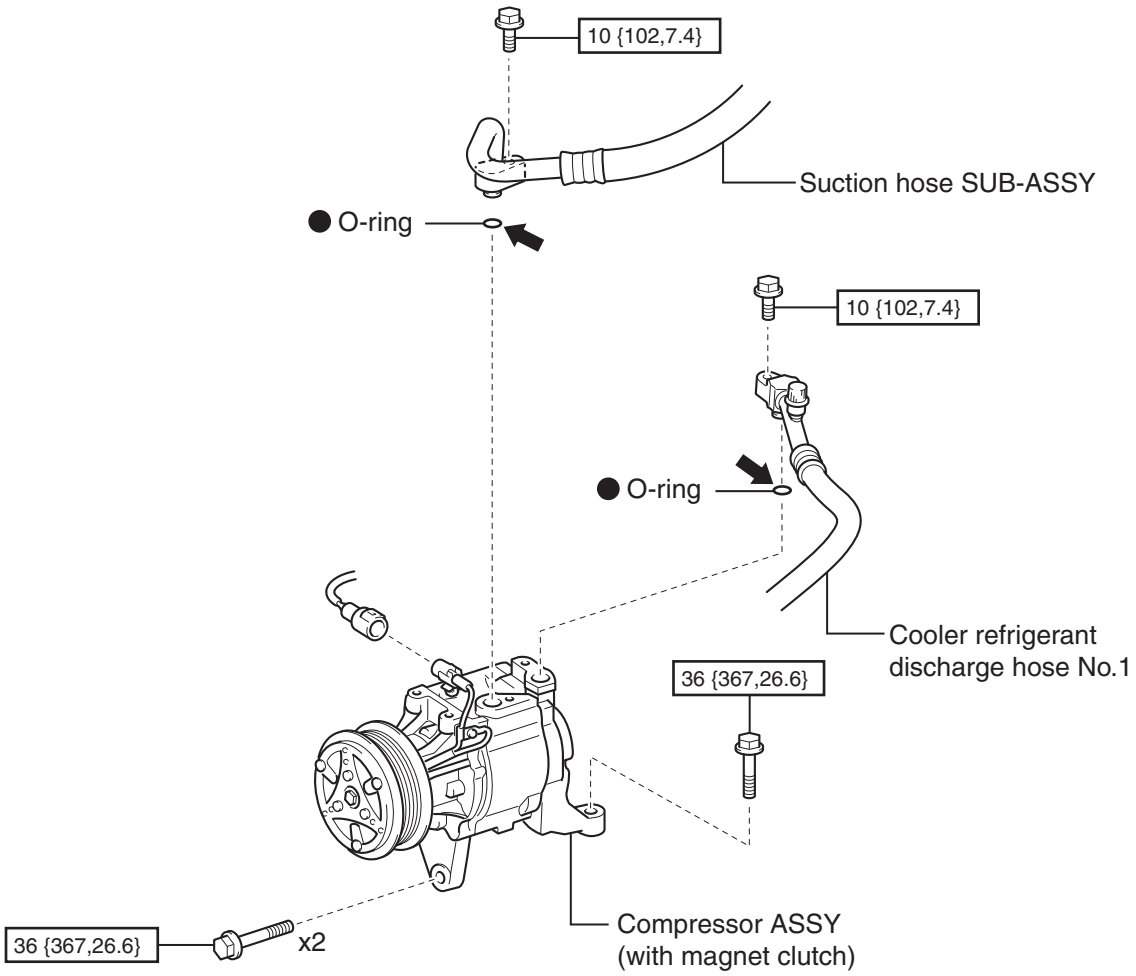

Removal

1. Discharge of refrigerant HFC-134a (R134a) (Refer to AC - 92)
2. Disconnection of the battery ground terminal (Refer to IN - 6)
3. Removal of air cleaner ASSY W/hose (Refer to EM - 75)
4. Removal of alternator cover (Refer to EM - 6)
5. Removal of belt alternator cover (Refer to EM - 7)
6. Removal of fan & alternator V-belt (Refer to EM - 7)

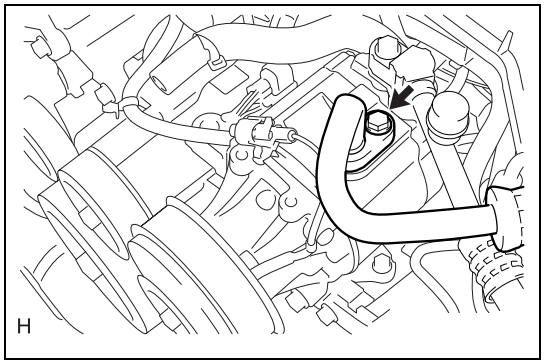

7. Disconnection of suction hose SUB-ASSY
   (1) Remove the bolt and disconnect the suction hose SUB-ASSY.
   (2) Remove the O-ring from the suction hose SUB-ASSY.
   CAUTION:
   Wrap vinyl tape around the fitting areas of the disconnected suction hose SUB-ASSY and the compressor ASSY (with magnet clutch) to prevent entry of dirt or moisture.

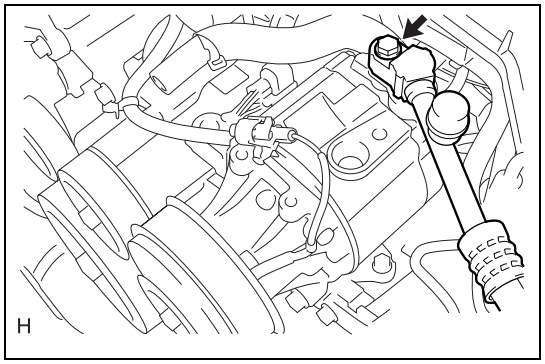

8. Disconnection of cooler refrigerant discharge hose NO.1
   (1) Remove the bolt and disconnect cooler refrigerant discharge hose NO.1.
   (2) Remove the O-ring from discharge hose cooler refrigerant discharge hose NO.1.
   CAUTION:
   Wrap vinyl tape around the fitting areas of disconnected cooler refrigerant discharge hose NO.1 and the compressor ASSY (with magnet clutch) to prevent entry of dirt or moisture.

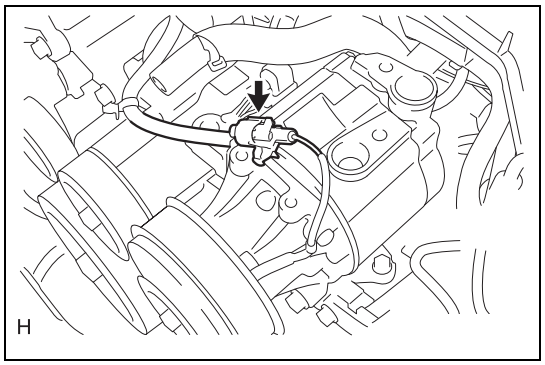

9. Removal of compressor ASSY (with magnet clutch)
   (1) Disconnect the connector.

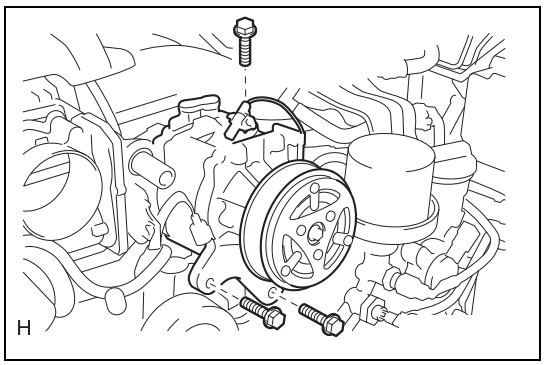

   (2) Remove the 3 bolts and remove the compressor ASSY (with magnet clutch).

AC

Installation

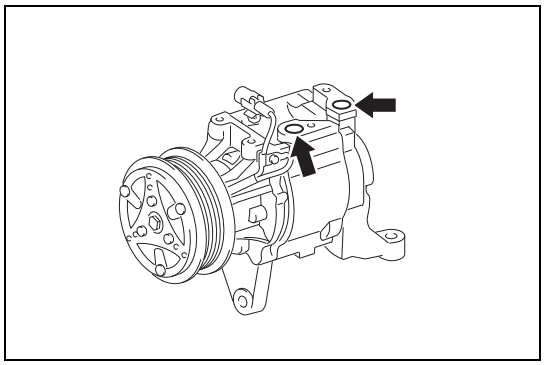

1. Inspection of compressor oil level
   (1) When replacing with a new compressor ASSY (with magnet clutch), release inert gas (helium) gradually from the position shown by the arrow in the figure, and then discharge the oil quantity shown below for installation.
   Standard value: (70 mL of oil in a new compressor ASSY (with magnet clutch)) - (Oil left in the removed compressor ASSY (with magnet clutch)) = (Quantity to be discharged during replacement)
   CAUTION:
   - To check the compressor oil quantity, strictly observe the cautions for installation/removal.
   - The compressor oil remains in the pipe of the vehicle. Therefore, if oil in the new compressor ASSY (with magnet clutch) is not discharged, the oil quantity is increased. It may disturb heat exchange of the refrigerant cycle, resulting in adverse effect such as poor cooling or noise/vibration.
   - If the oil quantity in the removed compressor ASSY (with magnet clutch) is small, check for oil leak.
   - Be sure to use ND-OIL8 for the compressor oil.
2. Installation of compressor ASSY (with magnet clutch)
   (1) Temporarily install the compressor ASSY (with magnet clutch) with the 3 bolts.

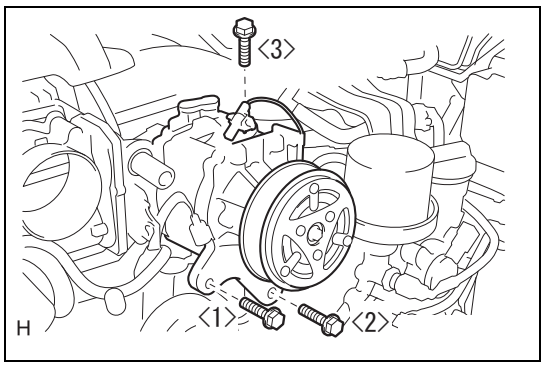

   (2) Install the compressor ASSY (with magnet clutch) with the 3 bolts in the order shown in the figure.
   Standard value:T=36N·m {367kgf·cm} {26.6ft·lbf}
   (3) Connect the connector.
3. Connection of cooler refrigerant discharge hose NO.1
   (1) Remove the vinyl tape wrapped around the joint of cooler refrigerant discharge hose NO.1.
   (2) Apply sufficient amount of compressor oil (ND-OIL8) to new O-rings and the fitting area of the compressor ASSY (with magnet clutch).
   (3) Install the O-ring on cooler refrigerant discharge hose NO.1.
   CAUTION:
   Do not allow the O-ring and the O-ring seal to have deposit of dirt.
   (4) Connect cooler refrigerant discharge hose NO.1 to the compressor ASSY (with magnet clutch) with the bolt.
   Standard value:T=10N·m {102kgf·cm} {7.4ft·lbf}
4. Connection of suction hose SUB-ASSY
   (1) Remove the vinyl tape wrapped around the joint of the suction hose SUB-ASSY.
   (2) Apply sufficient amount of compressor oil (ND-OIL8) to new O-rings and the fitting area of the compressor ASSY (with magnet clutch).
   (3) Install the O-ring on the suction hose SUB-ASSY.
   CAUTION:
   Do not allow the O-ring and the O-ring seal to have deposit of dirt.
   (4) Connect the suction hose SUB-ASSY to the compressor ASSY (with magnet clutch) with the bolts.
   Standard value:T=10N·m {102kgf·cm} {7.4ft·lbf}
5. Installation of fan & alternator V-belt (Refer to EM - 7)
6. Inspection of fan & alternator V-belt (Refer to EM - 8)

AC

7. Installation of belt alternator cover (Refer to EM - 7)
8. Installation of alternator cover (Refer to EM - 8)
9. Installation of air cleaner ASSY W/hose (Refer to EM - 8)
10. Connection of the battery ground terminal
    Standard value:T=6.0N·m {61kgf·cm} {4.4ft·lbf}
11. Charging refrigerant HFC-134a (R134a) (Refer to AC - 92)
12. Engine warm-up (Refer to AC - 93)
13. Inspection of refrigerant gas leak (Refer to AC - 93)
14. Settings when removing/installing battery terminals (Refer to IN - 10)

Unit inspection

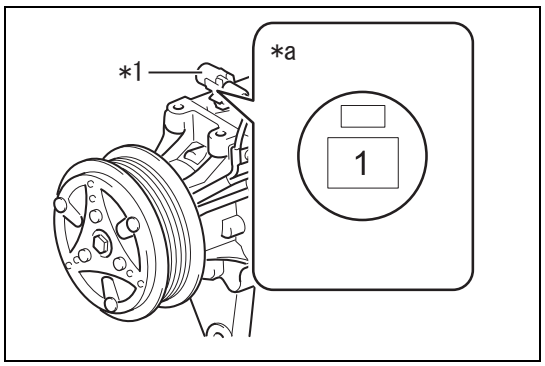

1. Inspection of compressor ASSY (with magnet clutch)
   (1) Inspection of magnet clutch operation
      (a)Check the magnet clutch operation when battery voltage is applied to the connector terminal.
      Criteria

Battery connection	Criteria
Battery positive →1 Battery negative →ground wire	Operation noise is heard and the magnet clutch hub is locked with the rotor.

Captions in illustration

*1	Connector of magnet clutch
*a	Connector not connected (Compressor ASSY (with magnet clutch))

AC

Magnet clutch ASSY

Exploded view

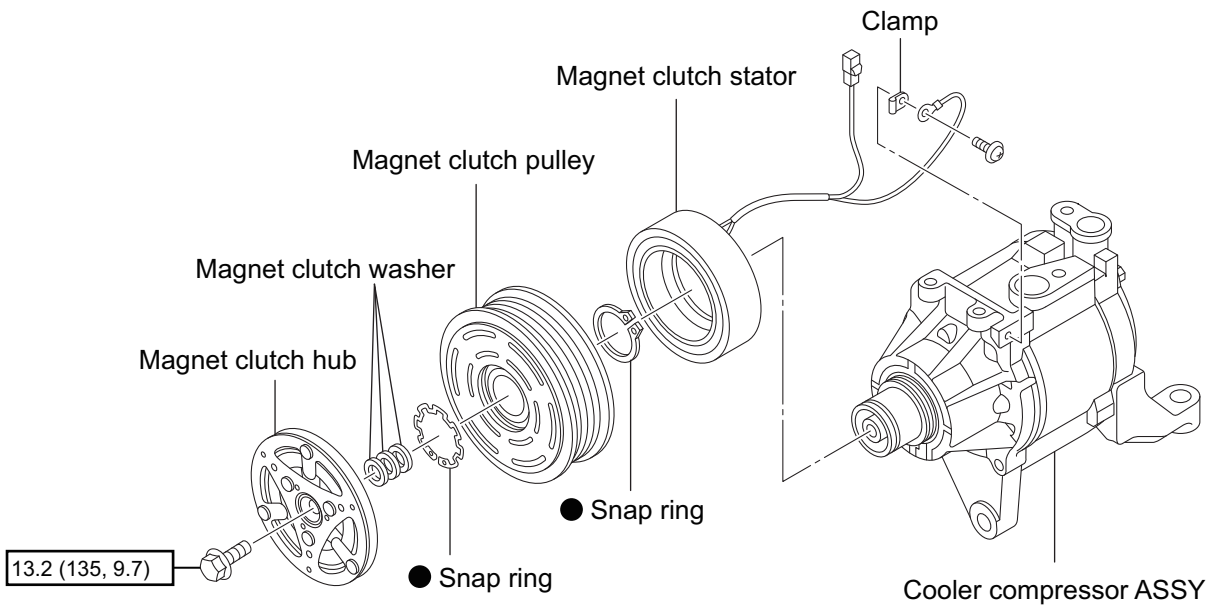

N*m {kgf*cm, ft*lbf} : Specified torque

● Non-reusable parts

AC-11433

AC

Removal

1. Disconnection of the battery ground terminal (Refer to IN - 6)
2. Removal of air cleaner ASSY W/hose (Refer to EM - 75)
3. Removal of alternator cover (Refer to EM - 6)
4. Removal of belt alternator cover (Refer to EM - 7)
5. Removal of fan & alternator V-belt (Refer to EM - 7)
6. Removal of magnet clutch ASSY
   (1) Use the SST to secure the magnet clutch hub and remove the bolt.
   SST 18355AA000, 18334AA020
   NOTE:
   Wrap the SST with protective tape in order not to damage the magnet clutch hub.

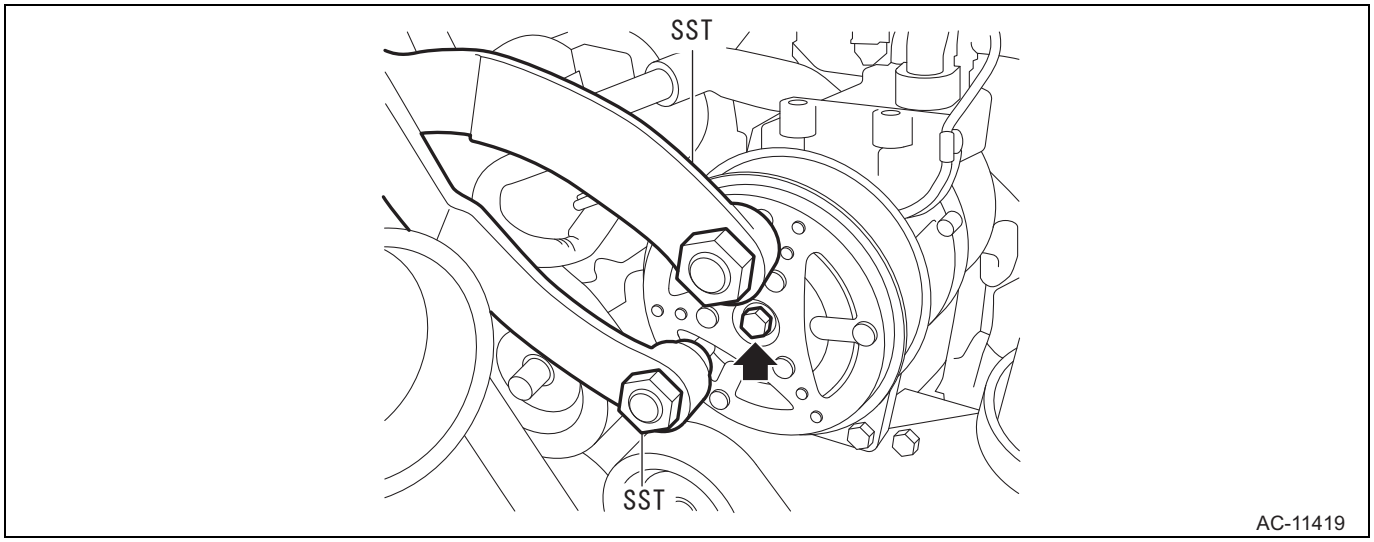

(2) Remove the magnet clutch hub.
CAUTION:
When removing the magnet clutch hub, be careful not to drop the magnet clutch washer.
(3) Disconnect the connector.

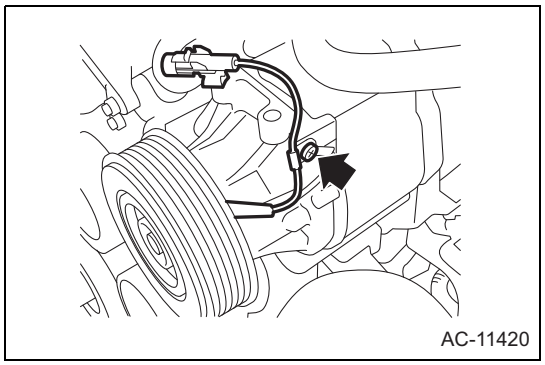

(4) Remove the screw and remove the clamp.

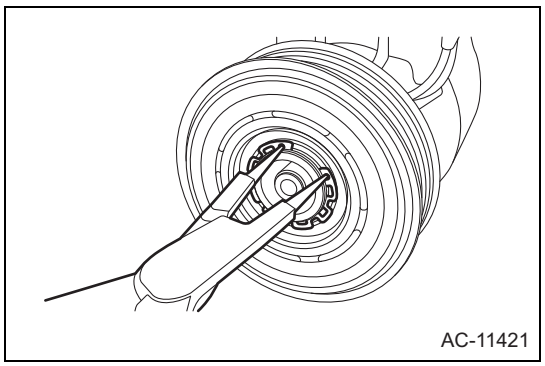

(5) Remove the snap ring and then remove the magnet clutch pulley.

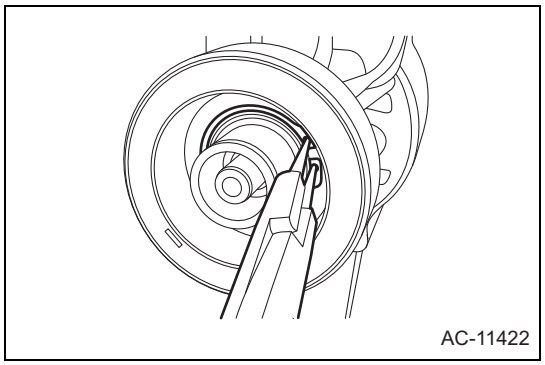

(6) Remove the snap ring and then remove the magnet clutch stator.

Installation

1. Installation of magnet clutch ASSY
   (1) Align the protrusion of magnet clutch stator with the cutout on the compressor side.

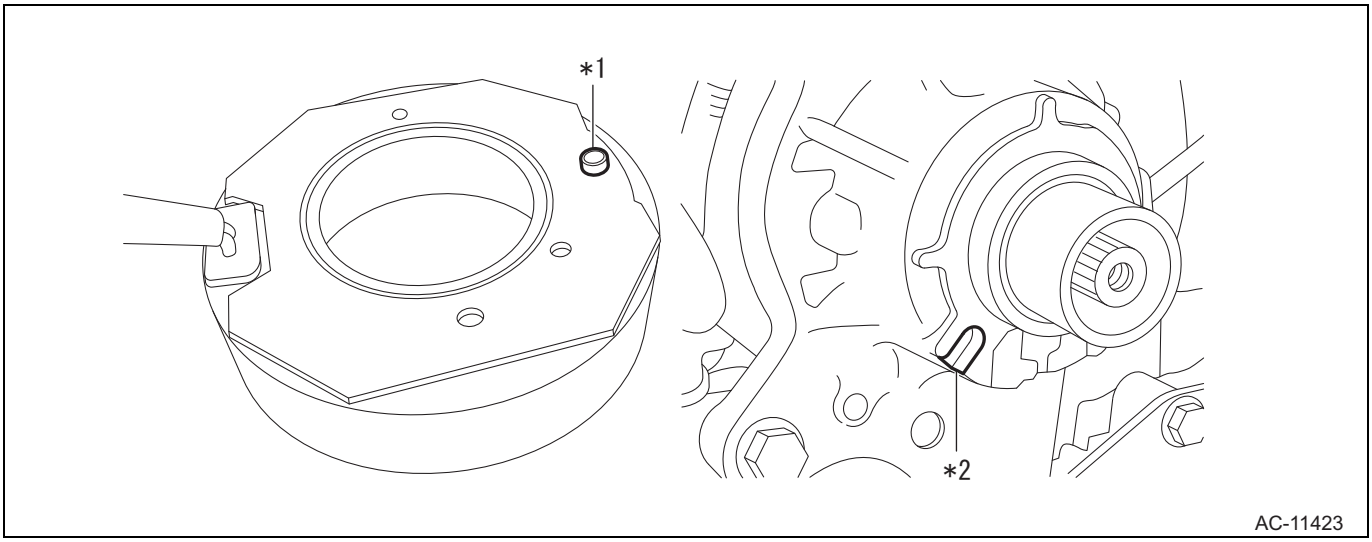

Captions in illustration

*1	Protrusion of magnet clutch stator	*2	Cutout on compressor side

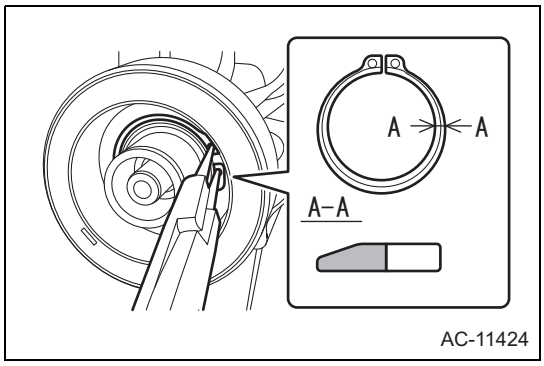

(2) Install the snap ring and secure the magnet clutch stator.
CAUTION:
Use the new snap ring and assemble so that the taper surface faces towards you.

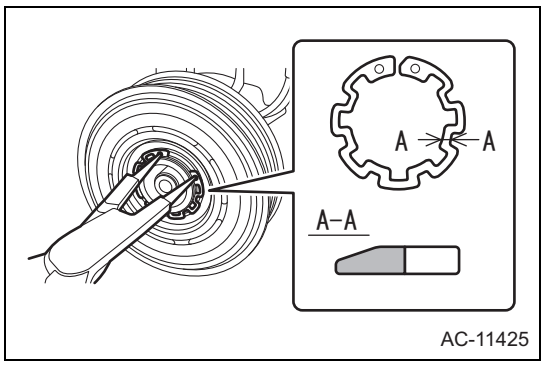

(3) Install the snap ring and secure the magnet clutch pulley.
CAUTION:
Use the new snap ring and assemble so that the taper surface faces towards you.

(4) Use the SST to install the magnet clutch hub.
SST 18355AA000, 18334AA020
Standard value:T=13.2N·m {135kgf·cm} {9.7ft·lbf}
NOTE:
Wrap the SST with protective tape in order not to damage the magnet clutch hub.

AC

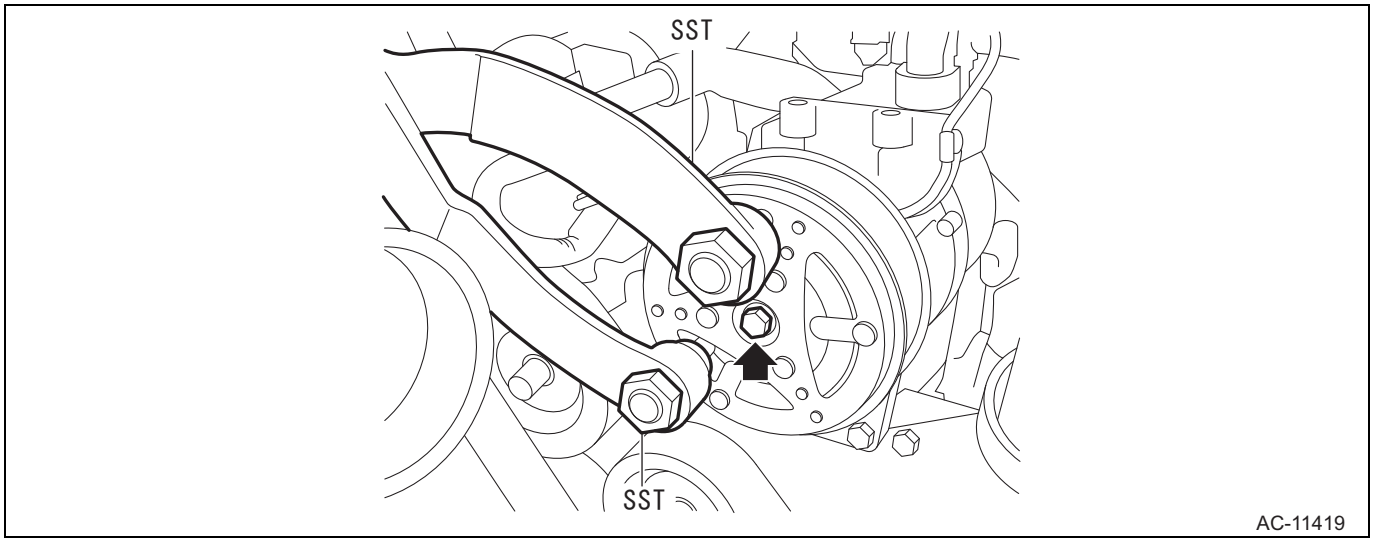

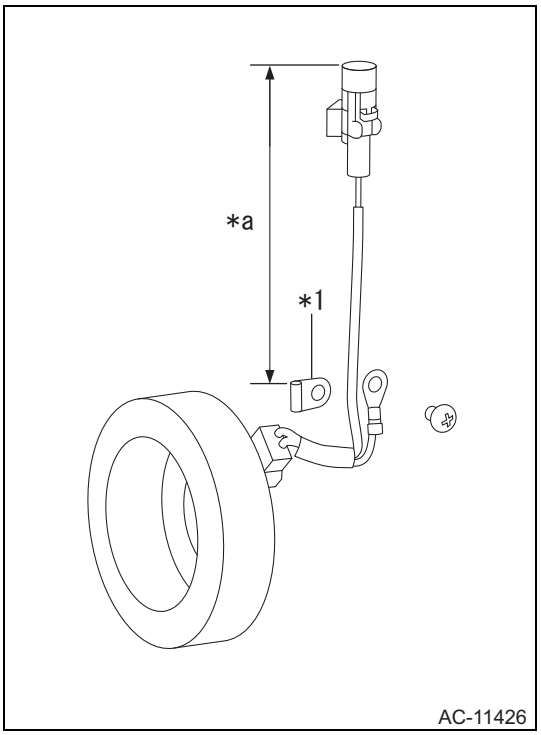

(5) As in the figure, install the clamp.

Captions in illustration

*1	Clamp
*a	110±15mm {4.3±0.6in}

2. Installation of fan & alternator V-belt (Refer to EM - 7)
3. Inspection of fan & alternator V-belt (Refer to EM - 8)
4. Installation of belt alternator cover (Refer to EM - 7)
5. Installation of alternator cover (Refer to EM - 8)
6. Installation of air cleaner ASSY W/hose (Refer to EM - 8)
7. Connection of the battery ground terminal
   Standard value:T=6.0N·m {61kgf·cm} {4.43ft·lbf}
8. Settings when removing/installing battery terminals (Refer to IN - 10)

Unit inspection

1. Inspection of magnet clutch gap
   (1) Set the dial gauge vertically to the magnet clutch hub.
   (2) Inspect the gap when battery voltage is applied to the connector terminal.

Criteria

Battery connection	Standard value
Battery positive →1 Battery negative →ground wire	0.35+0.15, -0.1mm {0.014+0.006, -0.004in}

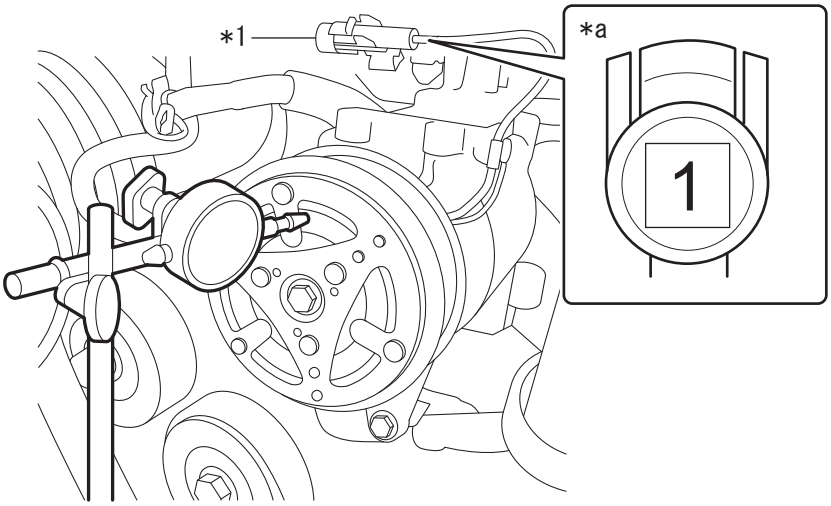

AC-11427

Captions in illustration

*1	Connector of magnet clutch	*a	Connector not connected (Compressor ASSY (with magnet clutch))

(3) If the inspection result is not within the standard value, adjust using magnet clutch washers.
NOTE:
The number of magnet clutch washer for adjustment should be three or less.

Cooler condenser ASSY

Exploded view

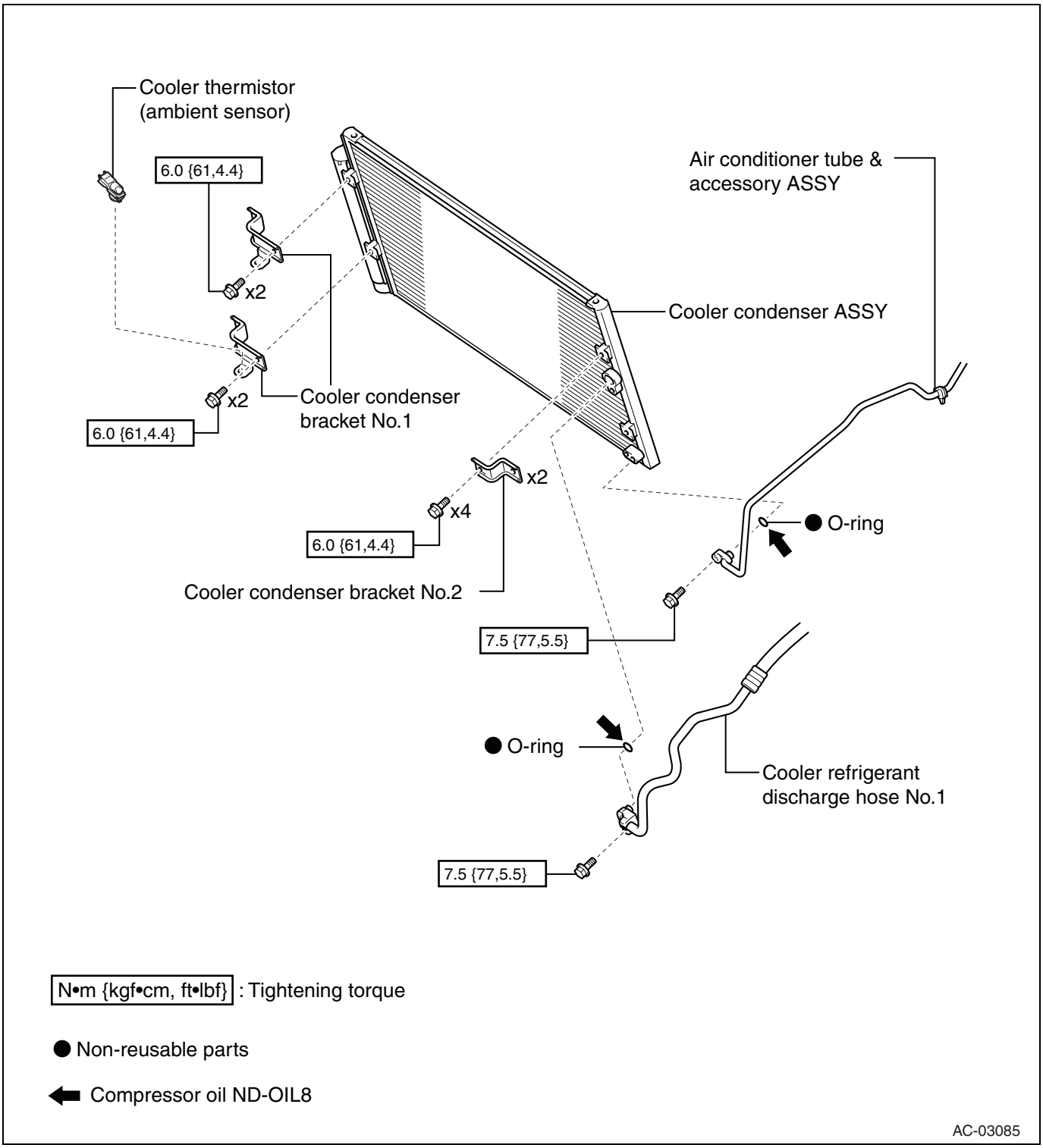

AC

Removal

1. Discharge of refrigerant HFC-134a (R134a) (Refer to AC - 92)
2. Disconnection of the battery ground terminal (Refer to IN - 6)
3. Removal of front bumper cover (Refer to ET - 4)

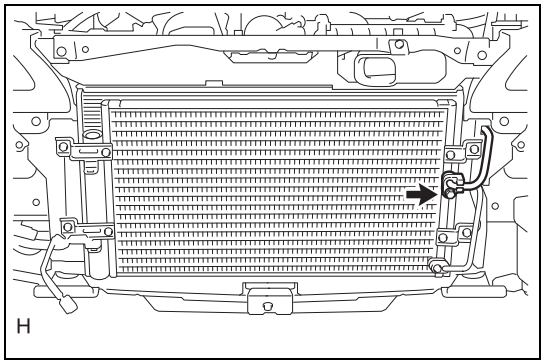

4. Disconnection of cooler refrigerant discharge hose NO.1
   (1) Remove the bolt and disconnect cooler refrigerant discharge hose NO.1.
   (2) Remove the O-ring from cooler refrigerant discharge hose NO.1.
   CAUTION:
   Wrap vinyl tape around the joints of disconnected cooler refrigerant discharge hose NO.1 and the cooler condenser ASSY to prevent entry of dirt or moisture.

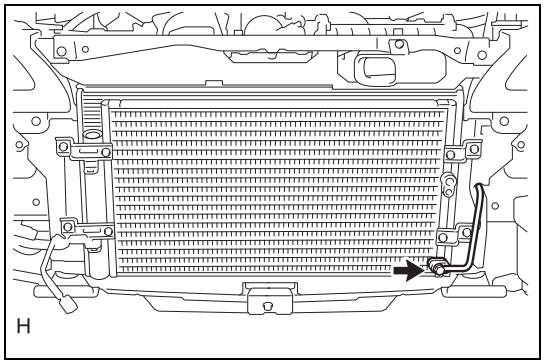

5. Disconnection of air conditioner tube & accessory ASSY
   (1) Remove the bolt and disconnect the air conditioner tube & accessory ASSY.
   (2) Remove the O-ring from the air conditioner tube & accessory ASSY.
   CAUTION:
   Wrap vinyl tape around the joints of the disconnected air conditioner tube & accessory ASSY and the cooler condenser ASSY to prevent entry of dirt or moisture.

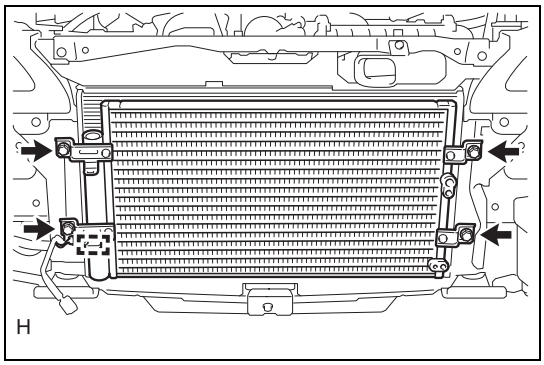

6. Removal of cooler condenser ASSY
   (1) Disconnect the clamp and connector of the ambient sensor.
   (2) Remove the 4 bolts and remove the cooler condenser ASSY from the vehicle.
   CAUTION:
   When removing the cooler condenser ASSY, do not give damage to the cooler condenser ASSY and the radiator ASSY.

AC

Disassembly

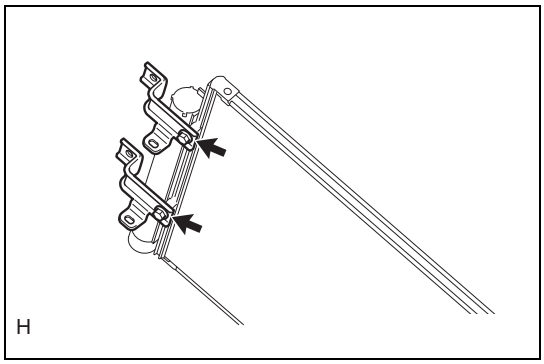

1. Removal of cooler condenser bracket NO.1
   (1) Remove the 2 bolts and remove 2 cooler condenser brackets NO.1.

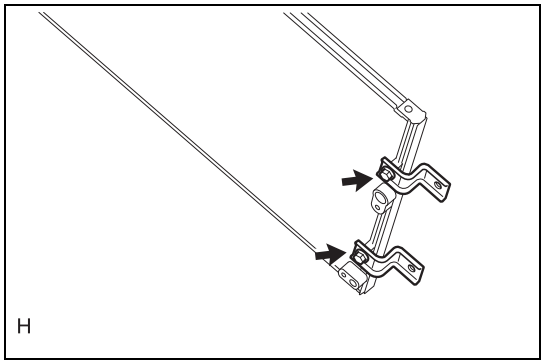

2. Removal of cooler condenser bracket NO.2
   (1) Remove the 2 bolts and remove 2 cooler condenser brackets NO.2.

Assembly

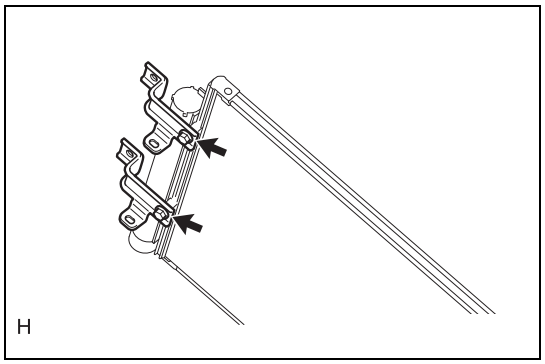

1. Installation of cooler condenser bracket NO.1
   (1) Install 2 cooler condenser brackets NO.1 with the 2 bolts.
   NOTE:
   Install the brackets in parallel (horizontal).
   Standard value:T=6.0N·m {61kgf·cm} {4.4ft·lbf}

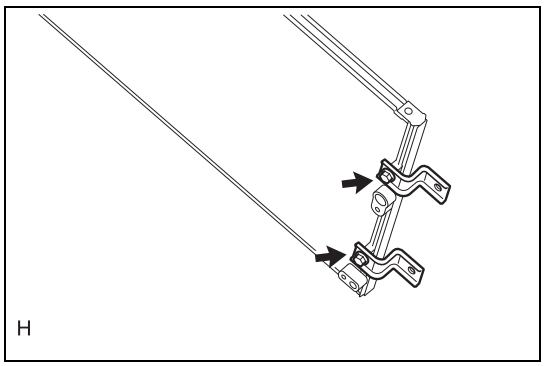

2. Installation of cooler condenser bracket NO.2
   (1) Install 2 cooler condenser brackets NO.2 with the 2 bolts.
   NOTE:
   Install the brackets in parallel (horizontal).
   Standard value:T=6.0N·m {61kgf·cm} {4.4ft·lbf}

AC

Installation

1. Installation of cooler condenser ASSY
   (1) Install the cooler condenser ASSY on the radiator ASSY with the 4 bolts.
   Standard value:T=6.0N·m {61kgf·cm} {4.4ft·lbf}
   CAUTION:
   When installing the cooler condenser ASSY, do not give damage to the cooler condenser ASSY and the radiator ASSY.
   (2) Connect the clamp and connector of the ambient sensor.
2. Connection of air conditioner tube & accessory ASSY
   (1) Remove the vinyl tape wrapped around the joint of the air conditioner tube & accessory ASSY and the cooler condenser ASSY.
   (2) Apply sufficient amount of compressor oil (ND-OIL8) to new O-rings and the joint of the air conditioner tube & accessory ASSY.
   (3) Install the O-ring on the air conditioner tube & accessory ASSY.
   CAUTION:
   Do not allow the O-ring and the O-ring seal to have deposit of dirt.
   (4) Install the air conditioner tube & accessory ASSY on the cooler condenser ASSY with bolts.
   Standard value:T=7.5N·m {77kgf·cm} {5.5ft·lbf}

3. Connection of cooler refrigerant discharge hose NO.1
   (1) Remove the vinyl tape wrapped around the joint of cooler refrigerant discharge hose NO.1 and the cooler condenser ASSY.
   (2) Apply sufficient amount of compressor oil (ND-OIL8) to the joint of a new O-ring and the discharge hose cooler refrigerant discharge hose NO.1.
   (3) Install the O-ring on cooler refrigerant discharge hose NO.1.
   CAUTION:
   Do not allow the O-ring and the O-ring seal to have deposit of dirt.
   (4) Install cooler refrigerant discharge hose NO.1 on the cooler condenser ASSY with the bolts.
   Standard value:T=7.5N·m {77kgf·cm}
4. Connection of the battery ground terminal
   Standard value:T=6.0N·m {61kgf·cm} {4.4ft·lbf}
5. Charging refrigerant HFC-134a (R134a) (Refer to AC - 92)
6. Engine warm-up (Refer to AC - 93)
7. Inspection of refrigerant gas leak (Refer to AC - 93)
8. Settings when removing/installing battery terminals (Refer to IN - 10)

Cooler thermistor (in-vehicle sensor)

Exploded view

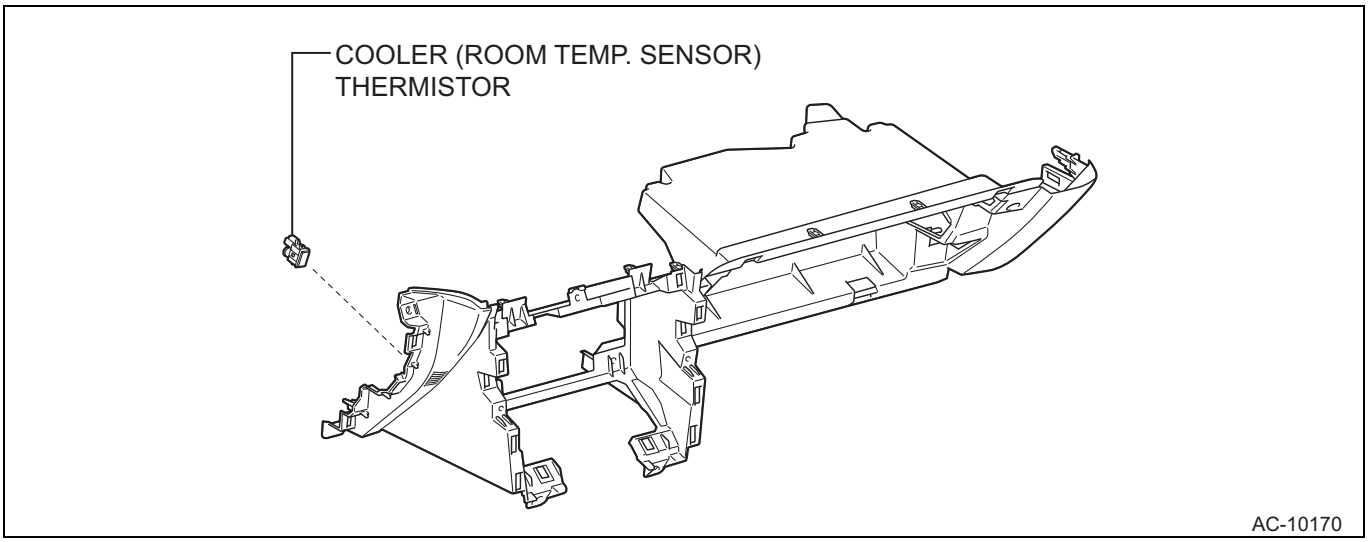

Removal

1. Removal of instrument panel SUB-ASSY LWR (Refer to IT - 26)

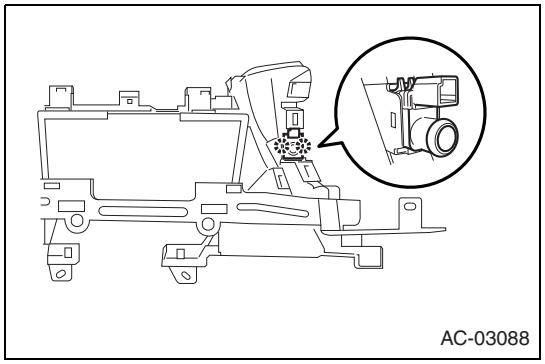

2. Removal of cooler thermistor (in-vehicle sensor)
   (1) Release the 2 claws and remove the cooler thermistor (in-vehicle sensor).

AC

Installation

1. Installation of cooler thermistor (in-vehicle sensor)
   (1) Engage the 2 claws and install the cooler thermistor (in-vehicle sensor).
2. Installation of instrument panel SUB-ASSY LWR (Refer to IT - 29)

Unit inspection

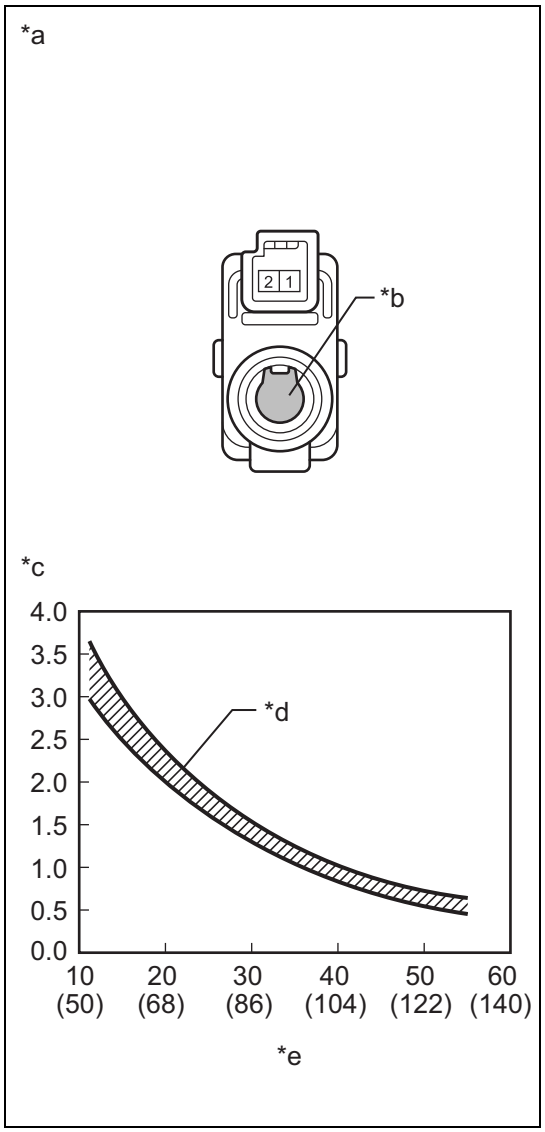

1. Inspection of cooler thermistor (in-vehicle sensor)
   (1) Check the resistance between the connector terminals.

Resistance

Inspection terminals	Temperature	Standard value
1(-) ←→2(+)	10°C {50°F}	3.00 to 3.73 kΩ
	15°C {59°F}	2.45 to 2.88 kΩ
	20°C {68°F}	1.95 to 2.30 kΩ
	25°C {77°F}	1.60 to 1.80 kΩ
	30°C {86°F}	1.28 to 1.47 kΩ
	35°C {95°F}	1.00 to 1.22 kΩ
	40°C {104°F}	0.80 to 1.00 kΩ
	45°C {113°F}	0.65 to 0.85 kΩ
	50°C {122°F}	0.50 to 0.70 kΩ
	55°C {131°F}	0.44 to 0.60 kΩ
	60°C {140°F}	0.36 to 0.50 kΩ

Captions in illustration

*a	Connector not connected (Cooler thermistor (in-vehicle sensor))
*b	Temperature sensor
*c	Resistance (kΩ)
*d	Tolerance range
*e	Temperature (°C {°F})

NOTE:

- If you touch the temperature sensor, correct judgment cannot be made due to your body temperature. To inspect the cooler thermistor (in-vehicle sensor), hold the connector side.
- Perform inspection after the cooler thermistor (in-vehicle sensor) is adapted to the ambient temperature.

AC

Cooler thermistor (ambient sensor)

Exploded view

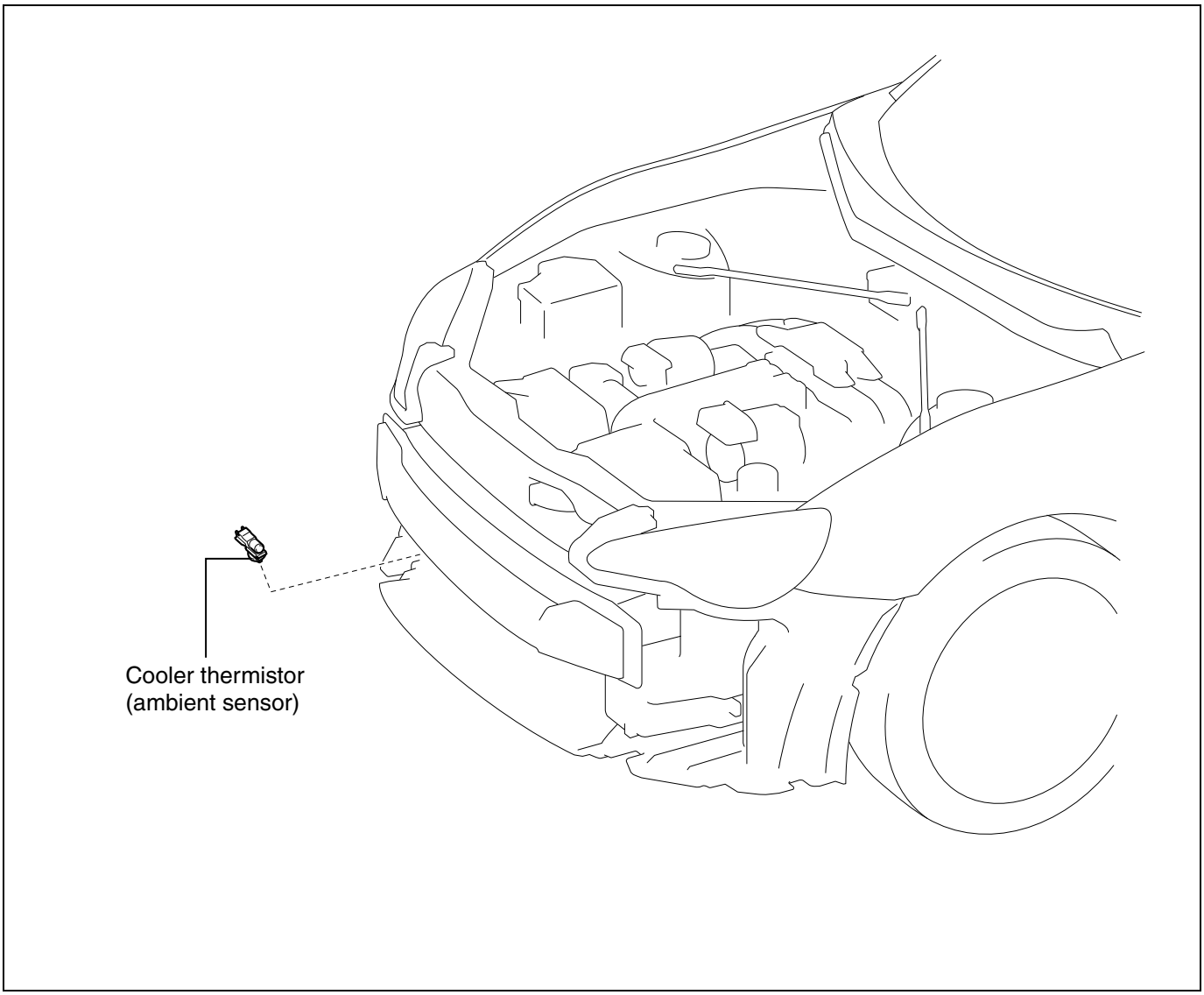

AC

Removal

1. Removal of the front bumper cover (Refer to ET - 4)

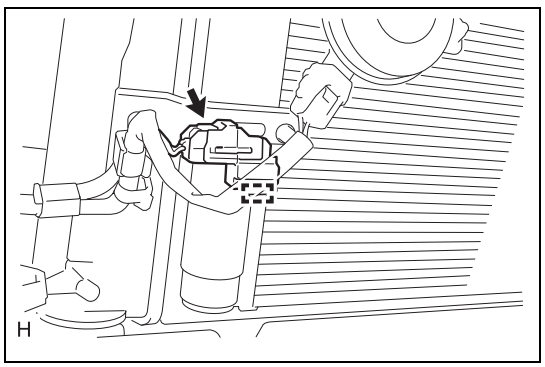

2. Removal of cooler thermistor (ambient sensor)
   (1) Disconnect the connector.
   (2) Release the clamp and remove the cooler thermistor (ambient sensor).

Installation

1. Installation of cooler thermistor (ambient sensor)
   (1) Engage the clamp and install the cooler thermistor (ambient sensor).
   (2) Connect the connector.

2. Installation of the front bumper cover (Refer to ET - 12)

Unit inspection

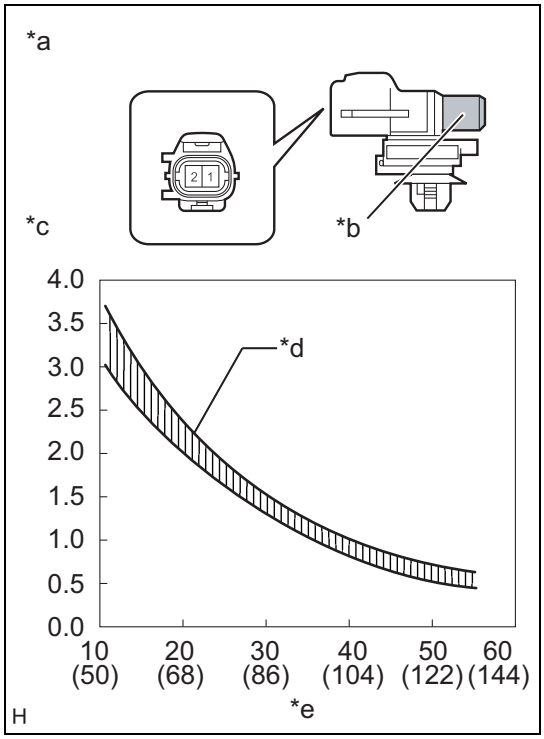

1. Inspection of cooler thermistor (ambient sensor)
   (1) Resistance inspection
      (a)Measure the resistance according to the following chart.
      Resistance

Inspection terminals	Inspection conditions (Ambient temperature)	Standard value
1 - 2	10°C {50°F}	3.00 to 3.73 kΩ
	15°C {59°F}	2.45 to 2.88 kΩ
	20°C {68°F}	1.95 to 2.30 kΩ
	25°C {77°F}	1.60 to 1.80 kΩ
	30°C {86°F}	1.28 to 1.47 kΩ
	35°C {95°F}	1.00 to 1.22 kΩ
	40°C {104°F}	0.80 to 1.00 kΩ
	45°C {113°F}	0.65 to 0.85 kΩ
	50°C {122°F}	0.50 to 0.70 kΩ
	55°C {131°F}	0.44 to 0.60 kΩ
	60°C {140°F}	0.36 to 0.50 kΩ

Captions in illustration

*a	Connector not connected (Cooler thermistor (ambient sensor))
*b	Temperature sensor
*c	Resistance (kΩ)
*d	Tolerance range
*e	Temperature (°C {°F})

NOTE:

- If you touch the temperature sensor, correct judgment cannot be made due to your body temperature. To inspect the sensor, hold the connector side.
- Perform inspection after the sensor is adapted to the ambient temperature.

AC

Cooler thermistor (sunload sensor)

Exploded view

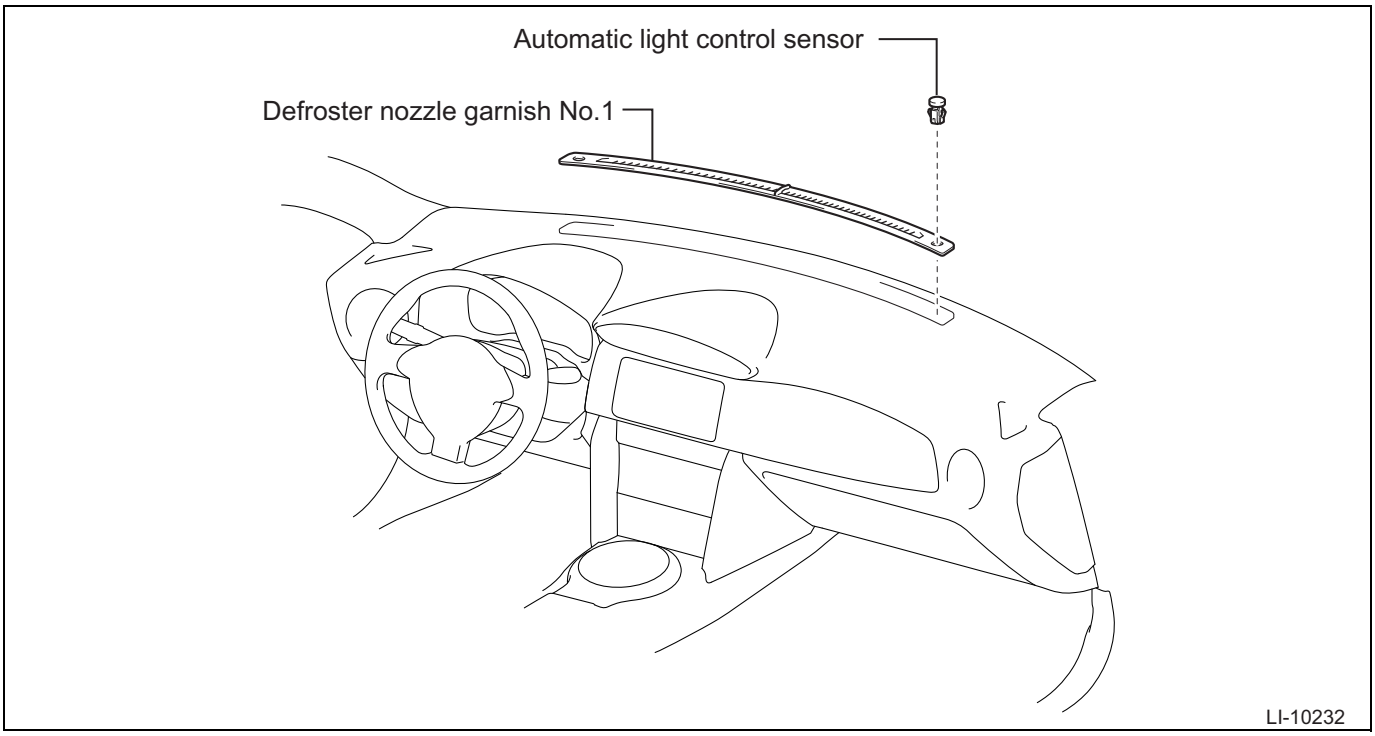

Removal

1. Precautions
   CAUTION:
   After turning the ignition switch to OFF, you may have to wait for a while before disconnecting the battery terminals. Check appropriate precautions for battery terminal disconnection before proceeding.
2. Disconnection of the battery ground terminal (Refer to IN - 6)

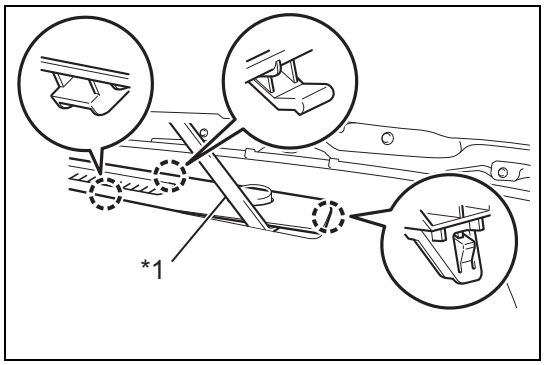

3. Disconnection of defroster nozzle garnish NO.1
   Using a molding remover, disengage the claws and disconnect defroster nozzle garnish NO.1.

Captions in illustration

*1	Molding remover

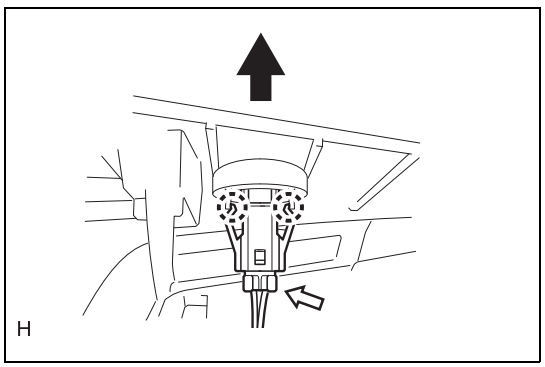

4. Removal of the automatic light control sensor
   (1) Disconnect the connector.
   (2) Release the 2 tabs, and remove the automatic light control sensor.

Installation

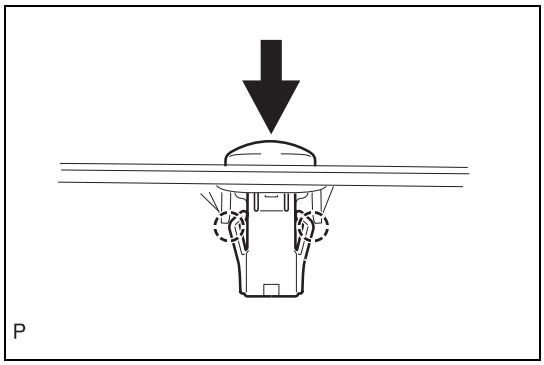

1. Installation of the automatic light control sensor
   (1) Engage the 2 claws and install the automatic light control sensor.
   (2) Connect the connector.
2. Installation of defroster nozzle garnish NO.1
   (1) Engage the claw and install defroster nozzle garnish NO.1.
3. Connection of the battery ground terminal
   Standard value:T=6.0N·m {61kgf·cm} {4.4ft·lbf}
4. Settings when removing/installing battery terminals (Refer to IN - 10)

Unit inspection

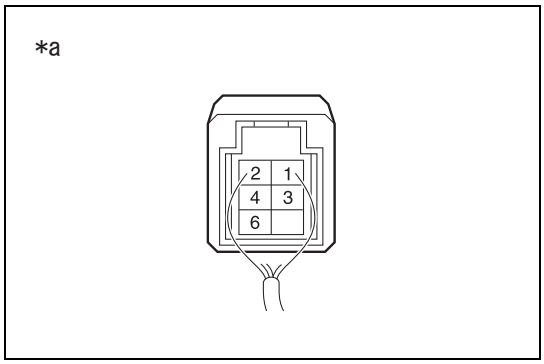

1. Inspection of the automatic light control sensor
   (1) Connect the connector of the automatic light control sensor.
   (2) Turn the ignition switch to ON.
   (3) Measure the voltage between connector terminals.

Voltage

Inspection terminals	Inspection conditions	Standard value
1 (TSD) - 6 (CLTE)	Condition not exposed to direct sunlight (Cover the sensor with a cloth.)	Less than 0.8 V
	When an inspection light is placed close	4.0 to 4.6 V The voltage varies depending on the light strength.

CAUTION:
If the light is weak, the sensor may not respond. Use an incandescent light and take measurements at the distance of within 30 cm {11.8 in} from the light.

Captions in illustration

*a	Connector connected (Automatic light control sensor)

AC

Cooler thermistor (evaporator sensor)

Exploded view

for Automatic Air Conditioning System:

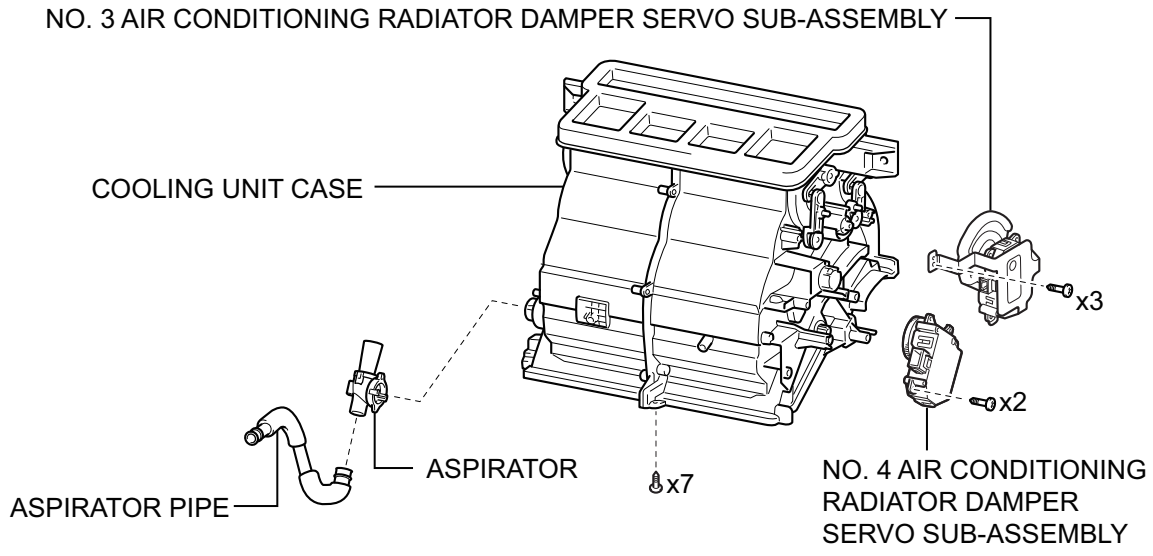

for Manual Air Conditioning System:

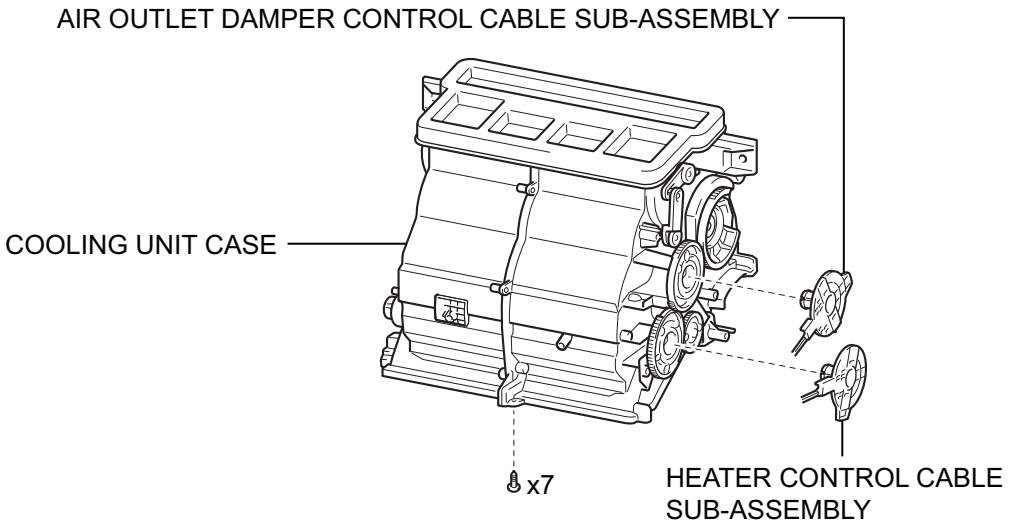

AC-03089

AC

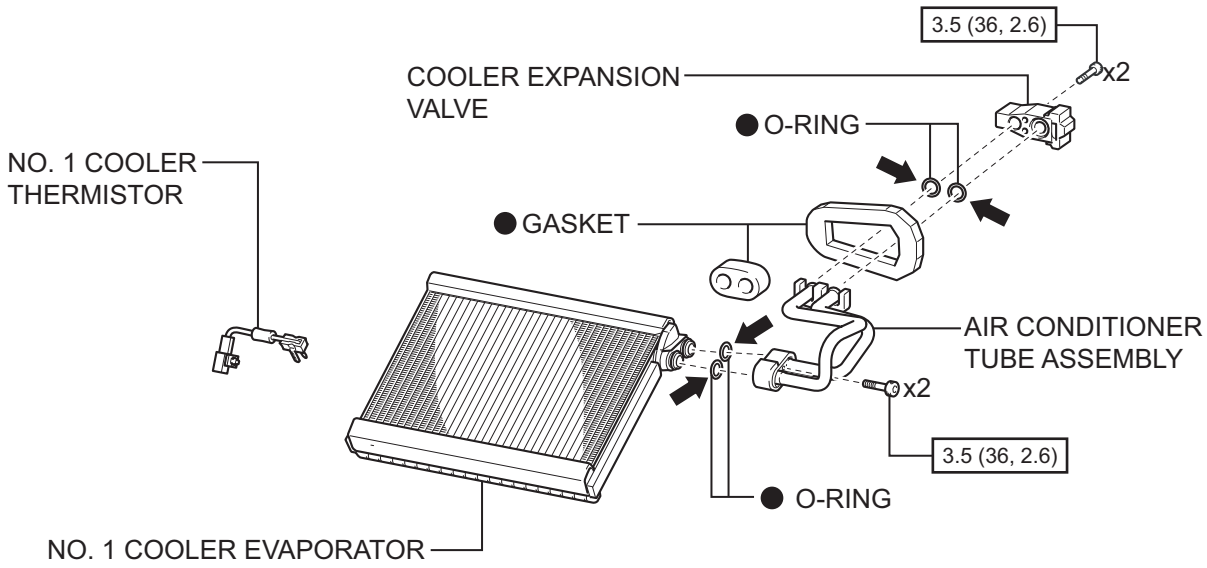

N*m (kgf*cm, ft*lbf) : Specified torque

● Non-reusable part

⬅ Compressor oil ND-OIL 8 or equivalent

AC-03090

AC

Removal

WARNING:

The following service operations include the works which may affect the SRS airbag system. Before starting work, always be sure to confirm the precautions related to the SRS airbag system. (Refer to RS - 5)

1. Precautions
   CAUTION:
   After turning the ignition switch to OFF, you may have to wait for a while before disconnecting the battery terminals. Check appropriate precautions for battery terminal disconnection before proceeding. (Refer to IN - 6)
2. Disconnection of the battery ground terminal
   (1) Turn the ignition switch to OFF, disconnect the battery ground terminal, and then wait for 60 seconds before starting the work.
   WARNING:
   The air bag and pretensioner system are fitted with a backup power supply. If you start the work within 60 seconds after disconnecting the battery ground terminal, the air bag may be activated.
   CAUTION:
   To avoid damage to the molding, be sure to fully open the door glasses on both driver's and passenger's sides.
3. Removal of air conditioner unit ASSY (for automatic air conditioning system) (Refer to AC - 105)
4. Removal of air conditioner unit ASSY (for manual air conditioning system) (Refer to AC - 107)
5. Removal of aspirator (for automatic air conditioning system) (Refer to AC - 108)
6. Removal of air outlet damper control cable SUB-ASSY (for manual air conditioning system) (Refer toAC - 113)
7. Removal of heater control cable SUB-ASSY (for manual air conditioning system) (Refer to AC - 113)

8. Removal of cooler expansion valve (Refer to AC - 110)
9. Removal of cooling unit case (for automatic air conditioning system) (Refer to AC - 110)
10. Removal of cooling unit case (for manual air conditioning system) (Refer to AC - 113)
11. Removal of cooler evaporator NO.1. (Refer to AC - 114)
12. Connection of air conditioner tube ASSY (Refer to AC - 114)

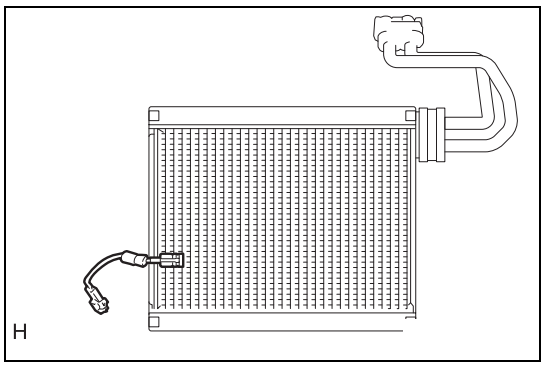

13. Removal of cooler thermistor NO.1
    (1) Remove cooler thermistor NO.1 from cooler evaporator NO.1.

Installation

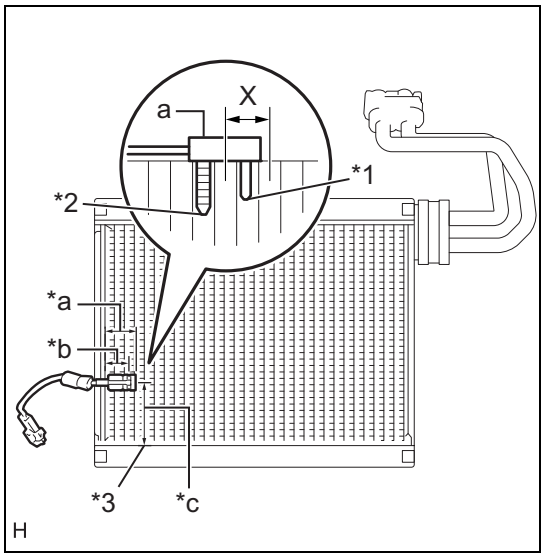

1. Installation of cooler thermistor NO.1
    (1) Install cooler thermistor NO.1 at the position in the figure.

Place	Length
*a	34.3 mm {1.350in}
*b	27.6 mm {1.087in}
*c	50 mm {1.970in}

Captions in illustration

*1	Sensor (5th row)
*2	Fastening portion
*3	From tank

CAUTION:
- To maintain the retaining force of cooler thermistor NO.1, insert it only once.
- When reusing cooler evaporator NO.1, insert it into the position one row adjacent (either left or right) to the position where it was inserted before. ("X" in the figure)
- After cooler thermistor NO.1 is inserted, do not apply undue force to the lead wire.
- Insert it straight until the end of the plastic case comes in contact with the end of cooler evaporator NO.1.

2. Installation of air conditioner tube ASSY (Refer to AC - 117)
3. Installation of cooler evaporator NO.1 (Refer to AC - 117)
4. Installation of cooling unit case (for automatic air conditioning system) (Refer to AC - 118)
5. Installation of cooling unit case (for manual air conditioning system) (Refer to AC - 118)
6. Installation of cooler expansion valve (Refer to AC - 122)
7. Installation of heater control cable SUB-ASSY (for manual air conditioning system) (Refer to AC - 118)
8. Installation of air outlet damper control cable SUB-ASSY (for manual air conditioning system) (Refer to AC - 119)
9. Installation of aspirator (for automatic air conditioning system) (Refer to AC - 126)
10. Installation of air conditioner unit ASSY (for automatic air conditioning system) (Refer to AC - 126)
11. Installation of air conditioner unit ASSY (for manual air conditioning system) (Refer to AC - 126)
12. Connection of the battery ground terminal
    Standard value:T=6.0N·m {61kgf·cm} {4.4ft·lbf}
13. Inspection of airbag warning light (Refer to RS - 53)
14. Settings when removing/installing battery terminals (Refer to IN - 10)

AC

Unit inspection

1. Inspection of cooler thermistor NO.1
   (1) Check the resistance between the connector terminals.

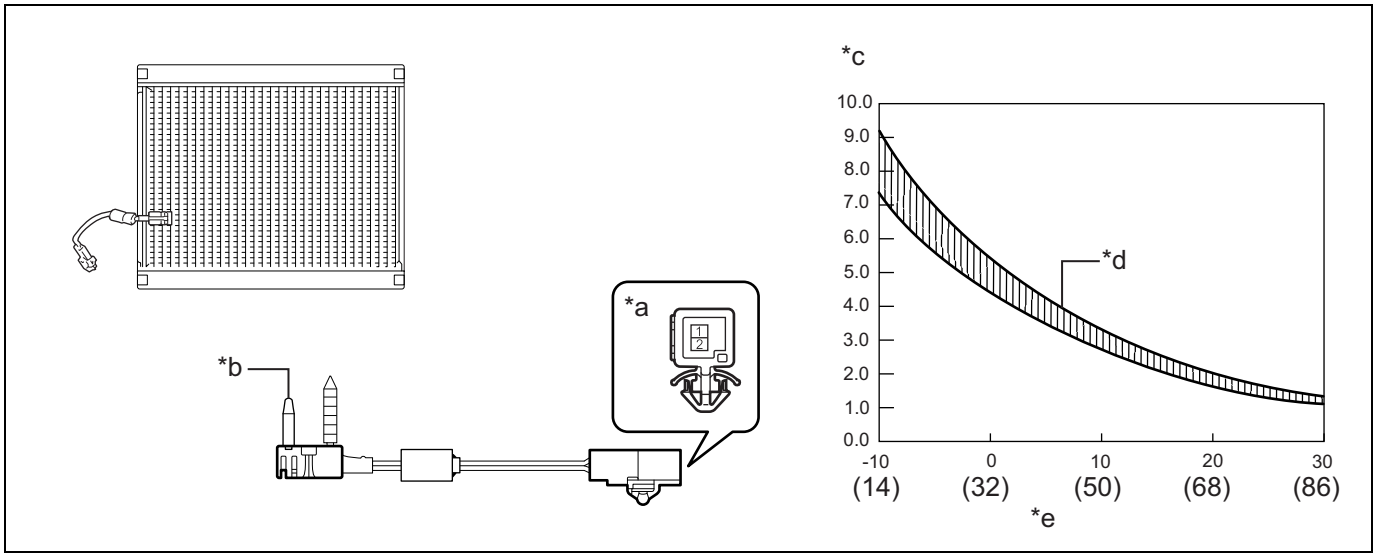

Captions in illustration

*a	Connector not connected (cooler thermistor NO.1)	*b	Temperature sensor
*c	Resistance (kΩ)	*d	Tolerance range
*e	Temperature (°C {°F})	-	-

Resistance

Inspection terminals	Inspection conditions	Standard value
1 (+) - 2 (-)	-10°C {14°F}	7.30 to 9.10 kΩ
	-5°C {23°F}	5.65 to 6.95 kΩ
	0°C {32°F}	4.40 to 5.35 kΩ
	5°C {41°F}	3.40 to 4.15 kΩ
	10°C {50°F}	2.70 to 3.25 kΩ
	15°C {59°F}	2.14 to 2.58 kΩ
	20°C {68°F}	1.71 to 2.05 kΩ
	25°C {77°F}	1.38 to 1.64 kΩ
	30°C {86°F}	1.11 to 1.32 kΩ

NOTE:

- If you touch the temperature sensor, correct judgment cannot be made due to your body temperature. To inspect cooler thermistor NO.1, hold the connector side.
- Perform inspection after cooler thermistor NO.1 is adapted to the ambient temperature.

AC

Air conditioner pressure switch

On-vehicle inspection

1. Inspection of air conditioner pressure switch
   (1) Inspection of vehicle wiring harness
      (a)Disconnect the connector of air conditioner pressure switch.

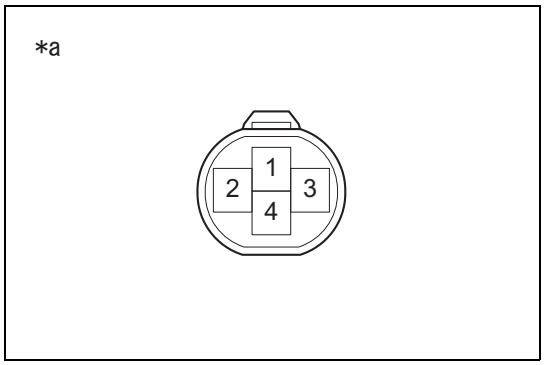

      (b)Measure the resistance between connector terminals at the vehicle wire harness side of the air conditioner pressure switch.
      Resistance

Inspection terminals	Inspection conditions	Standard value
2 (E) - Chassis ground	Always	Less than 1 Ω
2 (E) - 4 (B)	IG ON	Less than 1 Ω

Captions in illustration

*a	Connector not connected (Air conditioner pressure switch)

   (2) Inspection of air conditioner pressure switch
      (a)Attach the air conditioner tool set.

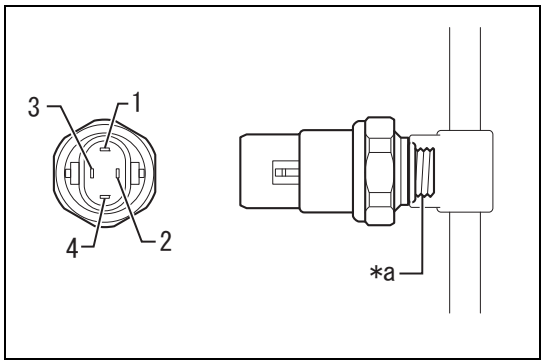

      (b)Apply the pressure listed in the table below to the sensor, and measure the resistance between terminals.
      Resistance

Inspection terminals	Inspection conditions	Standard value
2 (E) - 3 (ACP)	Release of sensor (Pressure to sensor: 0 kPa)	10 MΩ or more
2 (E) - 3 (ACP)	Apply the pressure of 1520 kPa {15.50kg/cm2, 220.4 psi} or more to the sensor.	Less than 1 Ω
1 (AC) - 4 (ACP)	Release of sensor (Pressure to sensor: 0 kPa)	10 MΩ or more
1 (AC) - 4 (ACP)	Apply the pressure of 22.5 kPa {0.23 kg/cm2, 3.26 psi} or more to less than 3140 kPa {32.02 kg/cm2, 455.3 psi} to the sensor.	Less than 1 Ω
1 (AC) - 4 (ACP)	Apply the pressure of 3140 kPa {32.02 kg/cm2, 455.3 psi} or more to the sensor.	10 MΩ or more

Captions in illustration

*a	Sensor

AC

Air conditioner panel (for automatic air conditioning system)

Exploded view

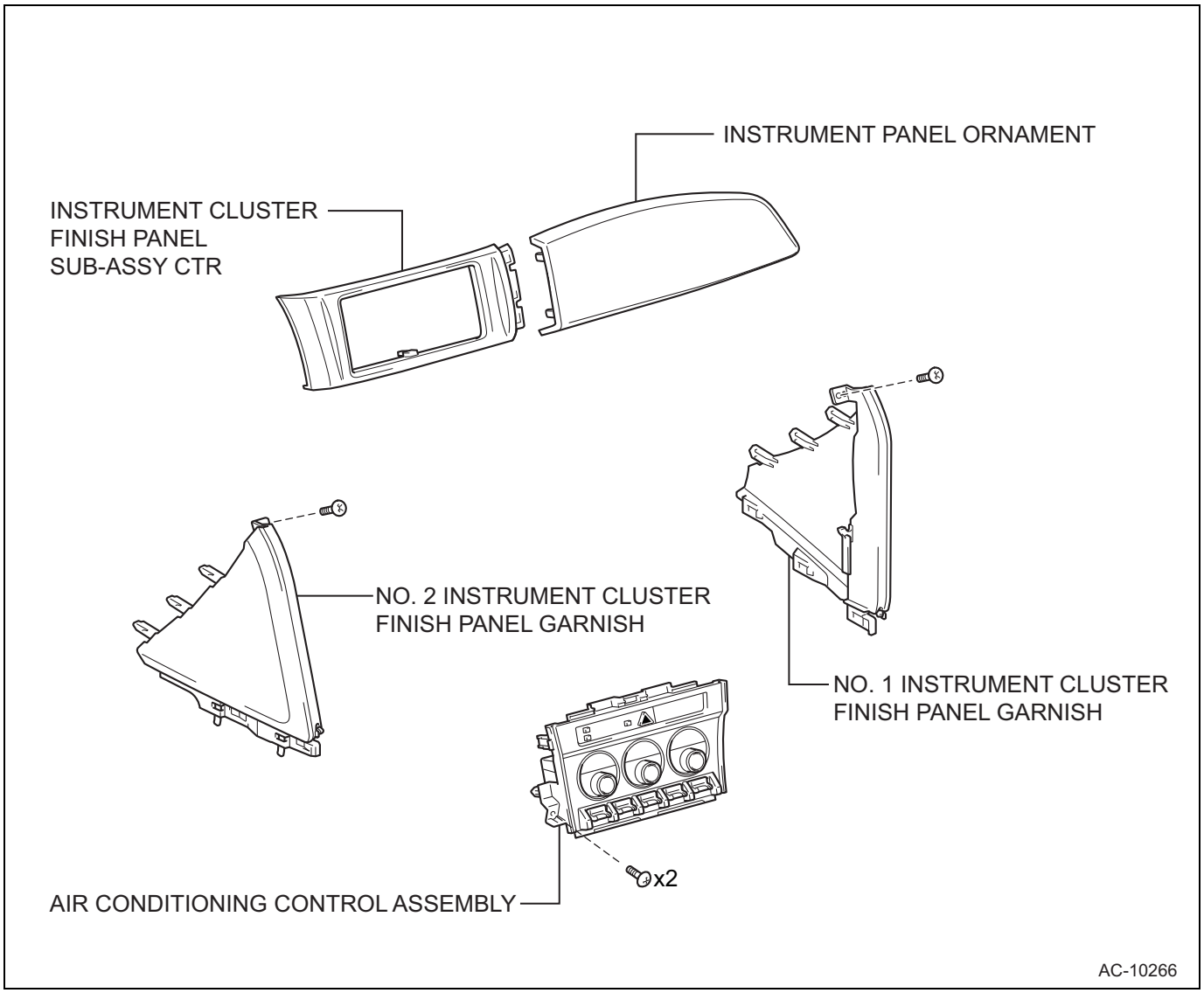

AC

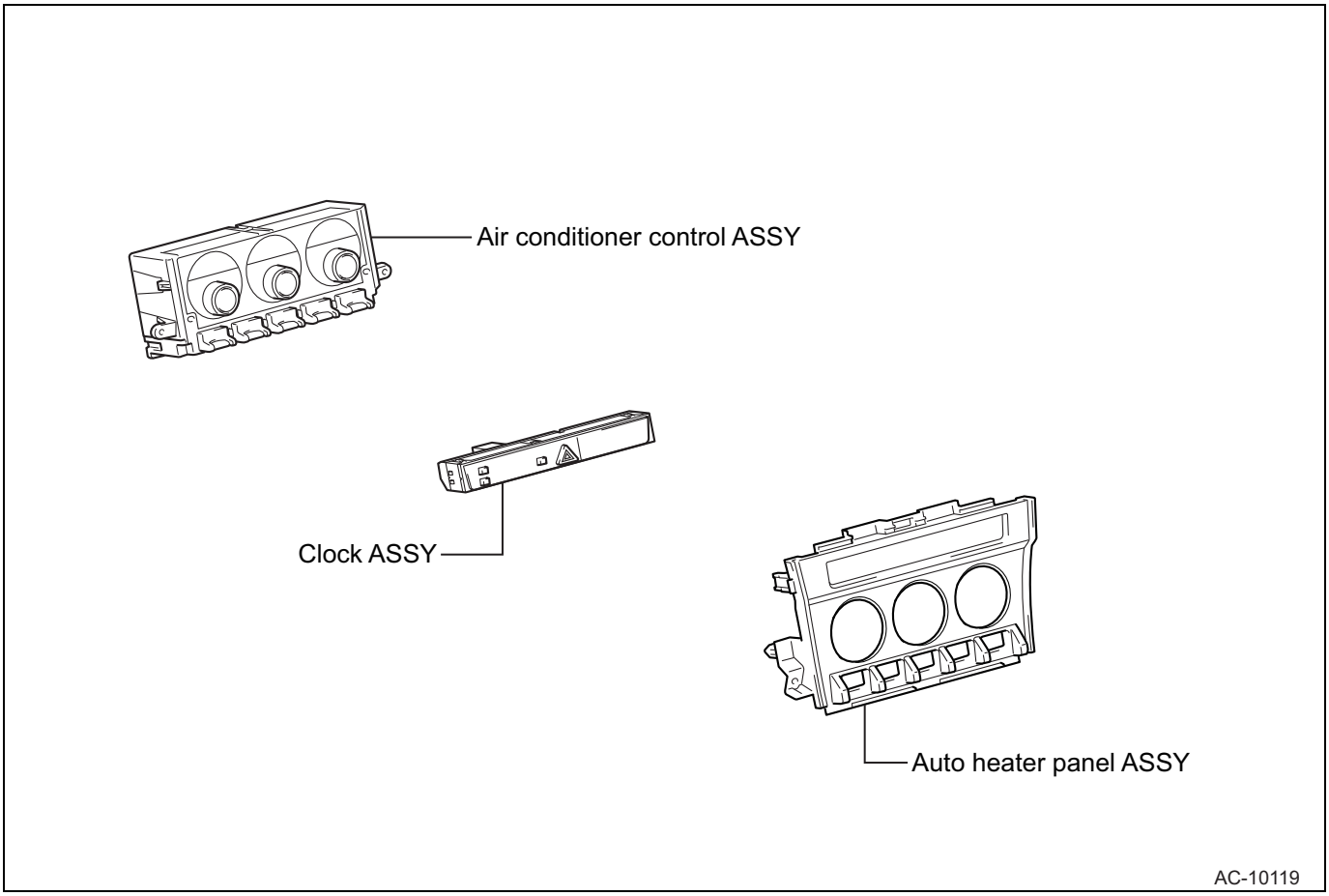

Removal

1. Removal of console box ASSY (Refer to IT - 33)
2. Removal of the instrument panel ornament (Refer to IT - 22)
3. Removal of instrument cluster finish panel SUB-ASSY CTR (Refer to IT - 23)
4. Removal of instrument cluster finish panel garnish NO.1 (Refer to IT - 23)
5. Removal of instrument cluster finish panel garnish NO.2 (Refer to IT - 24)

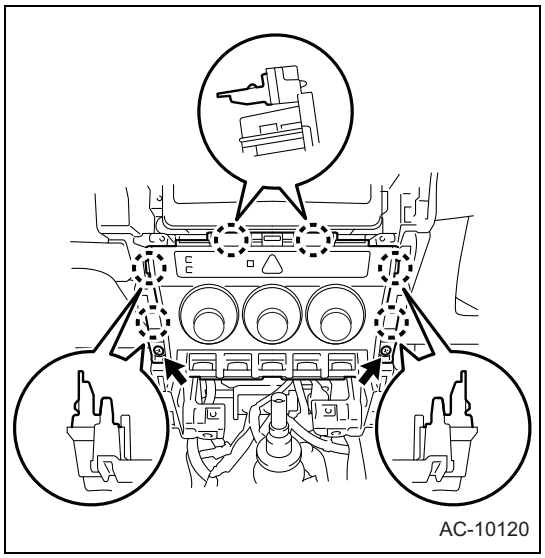

6. Removal of air conditioner control ASSY
   (1) Remove the 2 screws.
   (2) Release the 6 tabs.

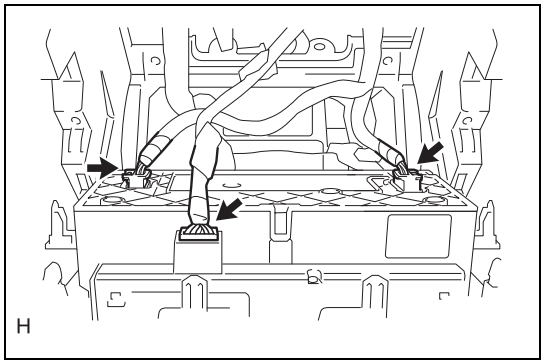

(3) Disconnect the connectors, and disconnect the air conditioner control ASSY.

Disassembly

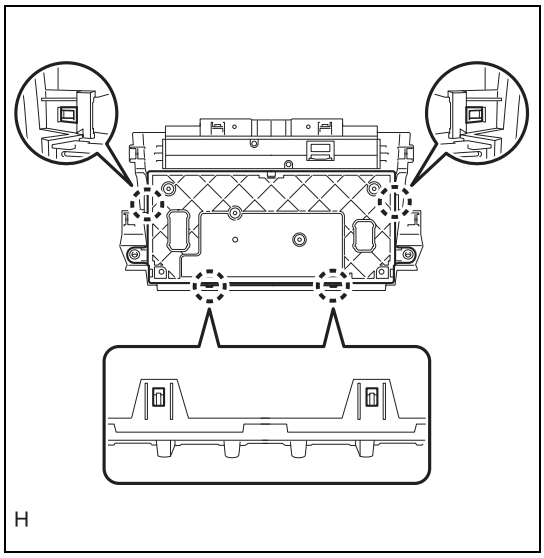

1. Removal of heater control base SUB-ASSY
   (1) Release the 4 claws and remove the heater control base SUB-ASSY.

2. Removal of clock ASSY (Refer to ME - 66)

Assembly

1. Installation of clock ASSY (Refer to ME - 66)

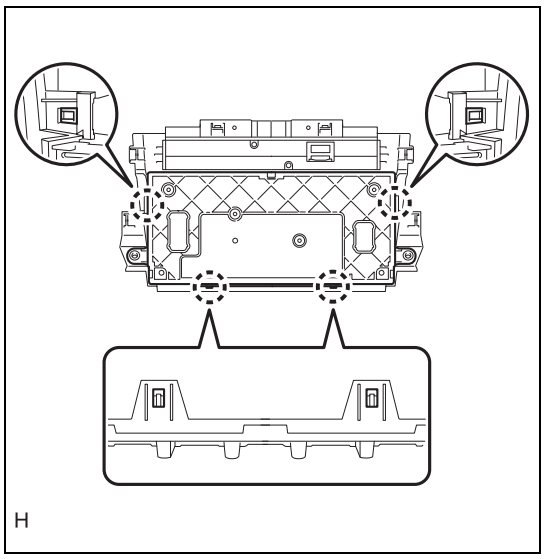

2. Installation of heater control base SUB-ASSY
   (1) Engage the 4 claws and install the heater control base SUB-ASSY.

Installation

1. Installation of air conditioner control ASSY
   (1) Connect each connector.
   (2) Fit in the 6 claws.

AC

(3) Install the air conditioner control ASSY with the 2 screws.

2. Installation of instrument cluster finish panel garnish NO.1 (Refer to IT - 29)
3. Installation of instrument cluster finish panel garnish NO.2 (Refer to IT - 29)
4. Installation of instrument cluster finish panel SUB-ASSY CTR (Refer to IT - 29)
5. Installation of the instrument panel ornament (Refer to IT - 29)
6. Installation of console box ASSY (Refer to IT - 38)

Unit inspection

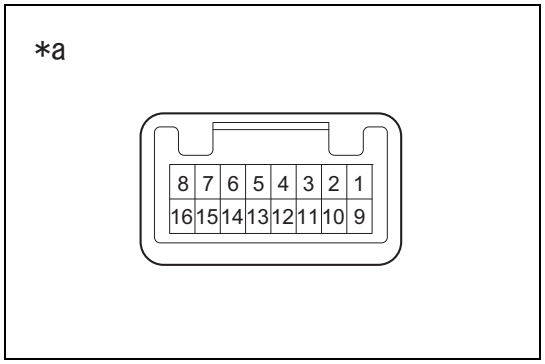

1. Inspection of air conditioner control ASSY
   (1) Check illumination.
      (a) Check the illumination when battery voltage is applied between the terminals.

Criteria

Battery connection	Criteria
Battery positive →11 Battery ground →15	Illumination ON

Captions in illustration

*a	Connector not connected (Air conditioner control ASSY)

AC

Air conditioner panel (for manual air conditioning system)

Exploded view

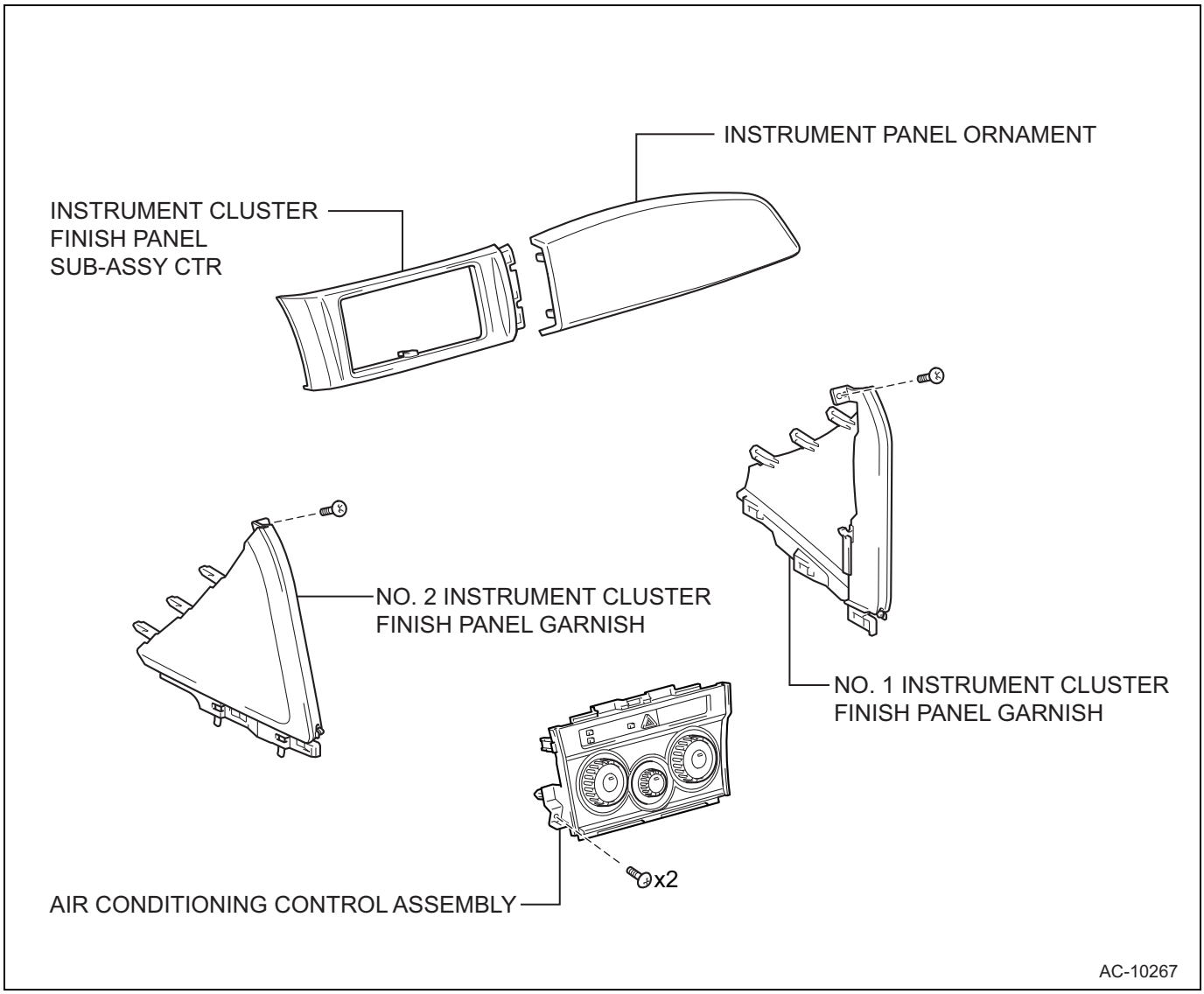

AC

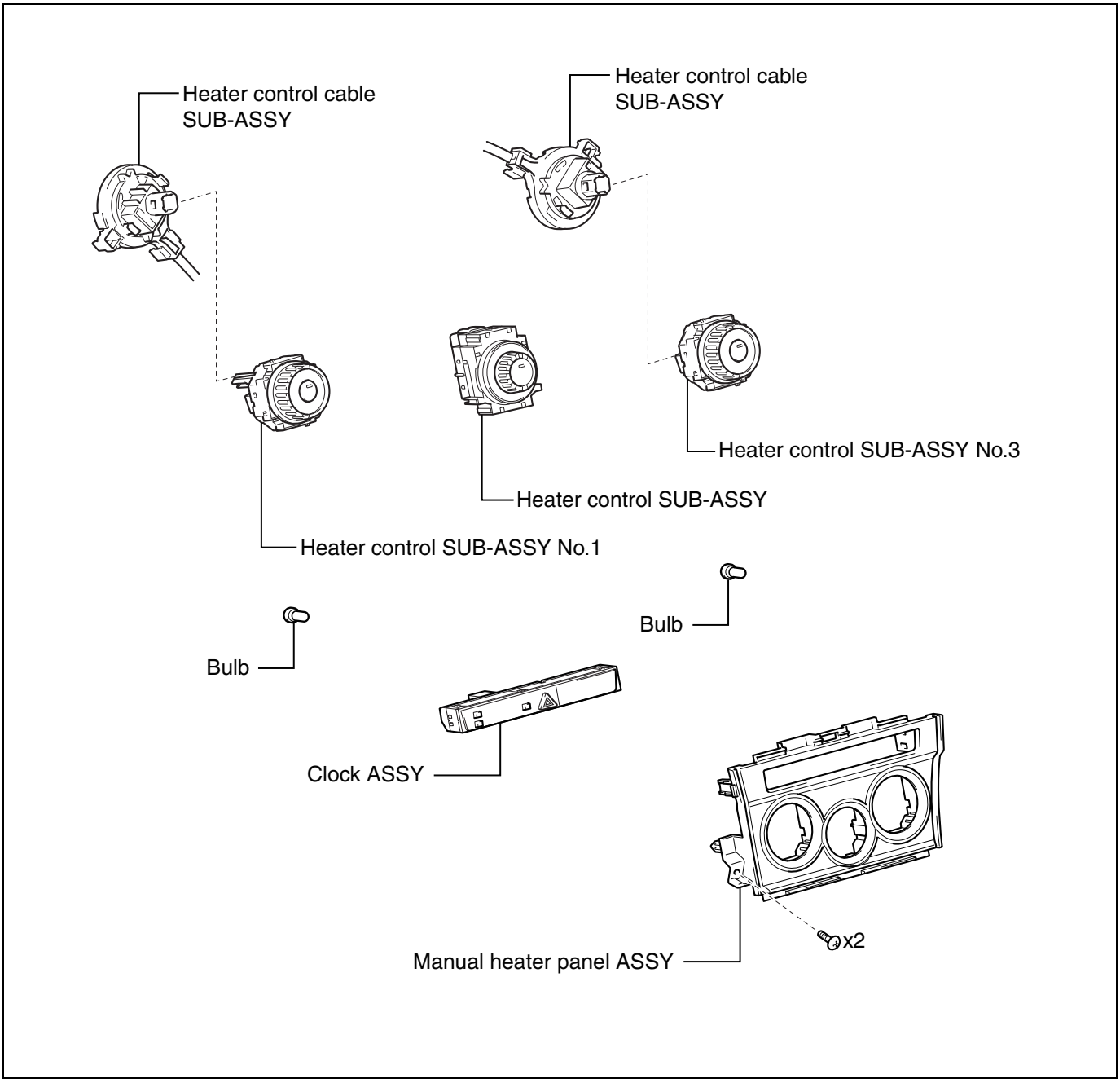

AC

Removal

1. Removal of console box ASSY (Refer to IT - 33)
2. Removal of the instrument panel ornament (Refer to IT - 22)
3. Removal of instrument cluster finish panel SUB-ASSY CTR (Refer to IT - 23)
4. Removal of instrument cluster finish panel garnish NO.1 (Refer to IT - 23)
5. Removal of instrument cluster finish panel garnish NO.2 (Refer to IT - 24)

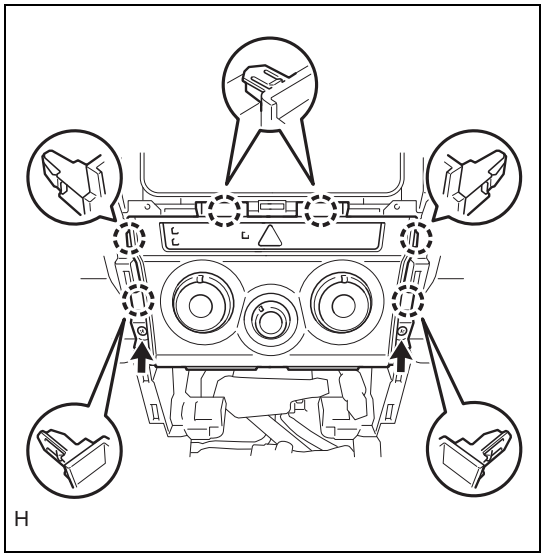

6. Removal of air conditioner control ASSY
   (1) Remove the 2 screws and release the 6 claws.



(2) Disconnect the connectors, and disconnect the air conditioner control ASSY.

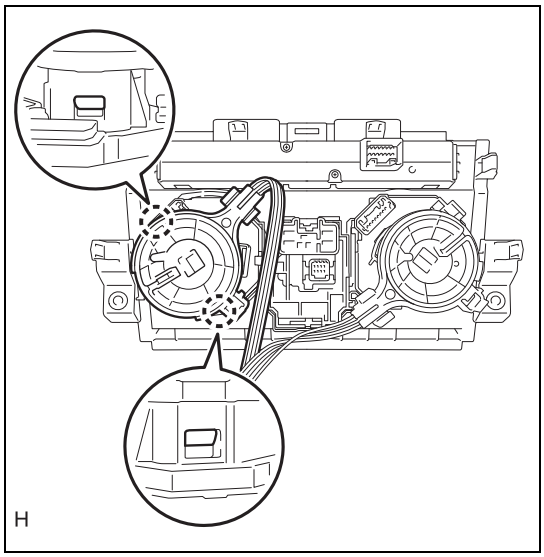

(3) Release the 2 claws and disconnect the heater control cable SUB-ASSY. (installed on the RH side)
NOTE:
If the dial position is set to MAX HOT, it can ease replacement work of the air conditioner unit ASSY because positioning can be easily performed when installing the cable.

AC

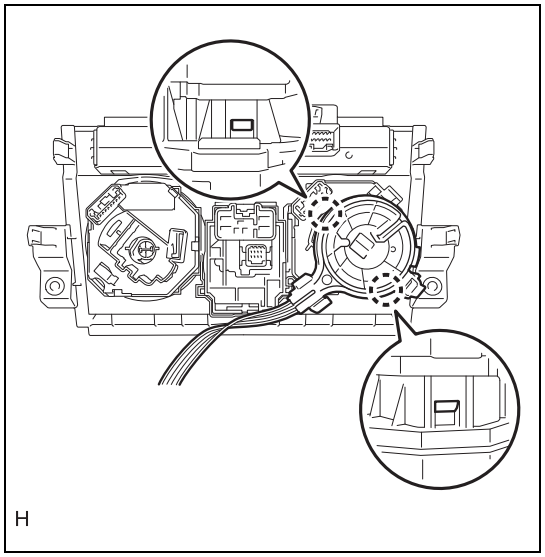

(4) Release the 2 claws, disconnect the heater control cable SUB-ASSY (installed on the LH side) and remove the air conditioner control ASSY.
NOTE:
Setting the dial position to "DEF" facilitates the replacement work of the air conditioner unit ASSY, and thus allows an easy positioning during installation of the cable.

Disassembly

1. Removal of clock ASSY (Refer to ME - 66)

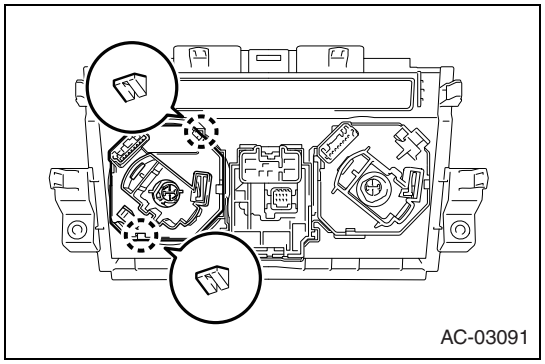

2. Removal of heater control SUB-ASSY NO.3
   (1) Release the 2 claws and remove heater control SUB-ASSY NO.3.

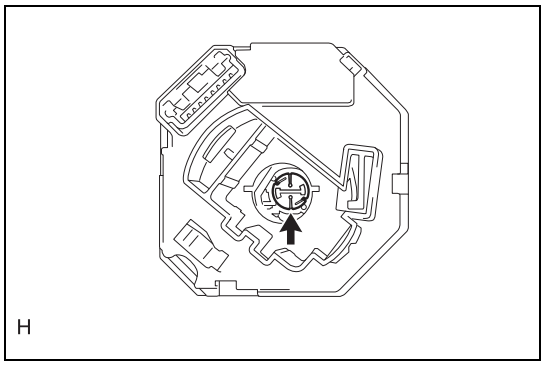

(2) Remove the valve.

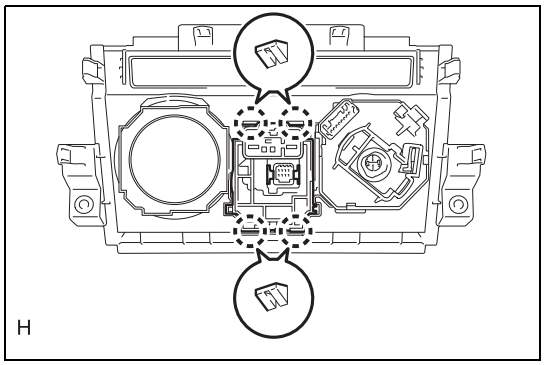

3. Removal of heater control SUB-ASSY
   (1) Release the 4 claws and remove the heater control SUB-ASSY.

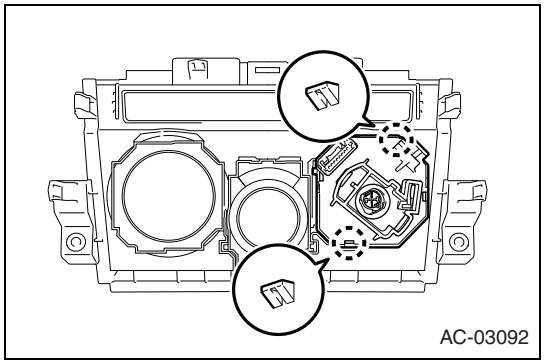

4. Removal of heater control SUB-ASSY NO.1
   (1) Release the 2 claws and remove heater control SUB-ASSY NO.1.

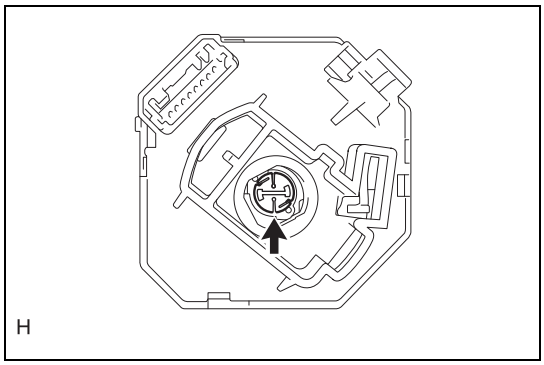

   (2) Remove the valve.

Assembly

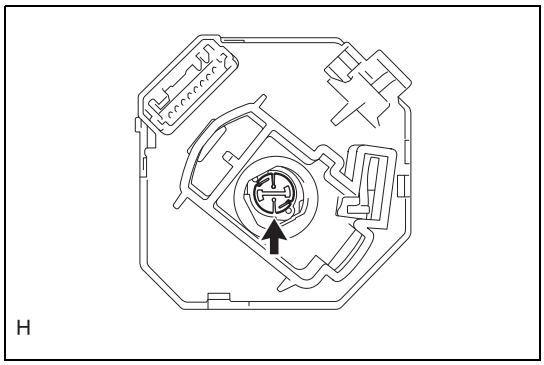

1. Installation of heater control SUB-ASSY NO.1
   (1) Install the valve.

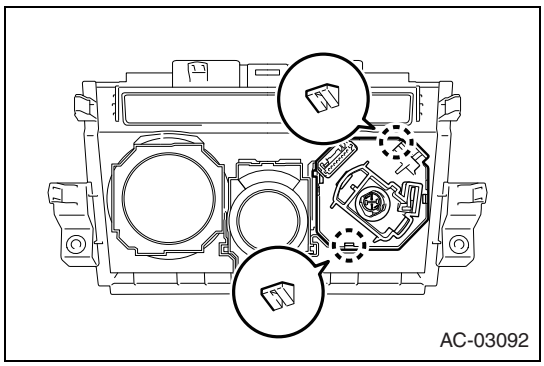

   (2) Engage the 2 claws and install heater control SUB-ASSY NO.1.

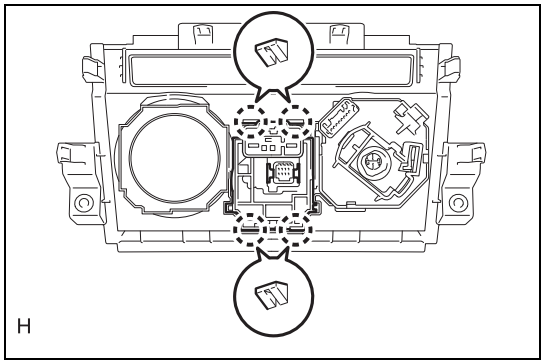

2. Installation of heater control SUB-ASSY
   (1) Engage the 4 claws and install the heater control SUB-ASSY.

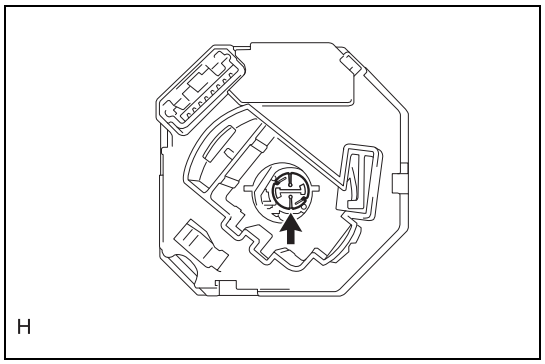

3. Installation of heater control SUB-ASSY NO.3
   (1) Install the valve.

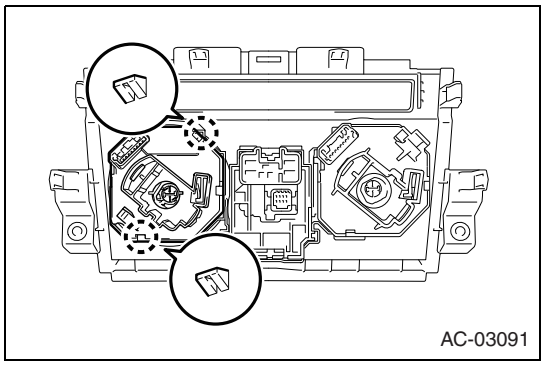

   (2) Engage the 2 claws and install heater control SUB-ASSY NO.3.

AC

4. Installation of clock ASSY (Refer to ME - 66)

Installation

1. Installation of air conditioner control ASSY
   (1) After positioning with the cable, engage the 2 claws and connect the heater control cable SUB-ASSY. (installed on the RH side)
   (2) After positioning with the cable, engage the 2 claws and connect the heater control cable SUB-ASSY. (Installed on the LH side)
   (3) Connect each connector.
   (4) Install the 2 screws, engage the 6 claws, and install the air conditioner control ASSY.
2. Installation of instrument cluster finish panel garnish NO.1 (Refer to IT - 29)
3. Installation of instrument cluster finish panel garnish NO.2 (Refer to IT - 29)
4. Installation of instrument cluster finish panel SUB-ASSY CTR (Refer to IT - 29)
5. Installation of the instrument panel ornament (Refer to IT - 29)
6. Installation of console box ASSY (Refer to IT - 38)

Unit inspection

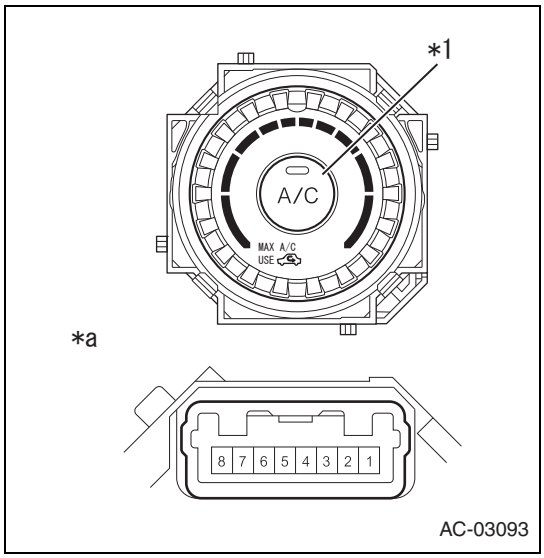

1. Inspection of heater control SUB-ASSY NO.3
   (1) Check the resistance between the connector terminals.

Resistance

Inspection terminals	Inspection conditions	Standard value
2 - 1	A/C switch OFF	10 kΩ or more
2- 4	A/C switch OFF	10 kΩ or more
1 - 4	Always	Less than 1 Ω
2 - 1	A/C switch ON	Less than 1 Ω
2- 4	A/C switch ON	Less than 1 Ω
5 - 6	Always	Less than 1 Ω

Captions in illustration

*1	A/C switch
*a	Connector not connected (Heater control SUB-ASSY NO.3)

   (2) Check the illumination when battery voltage is applied between the terminals.

Criteria

Battery connection	Criteria
Battery positive →5 Battery ground →6	Illumination ON

   (3) Check the indicator when battery voltage is applied between the terminals.

Criteria

Inspection terminals	Inspection conditions	Standard value
Battery positive →7 Battery ground →4	A/C switch OFF	Off
Battery positive →7 Battery ground →4	A/C switch ON	Light turns on.

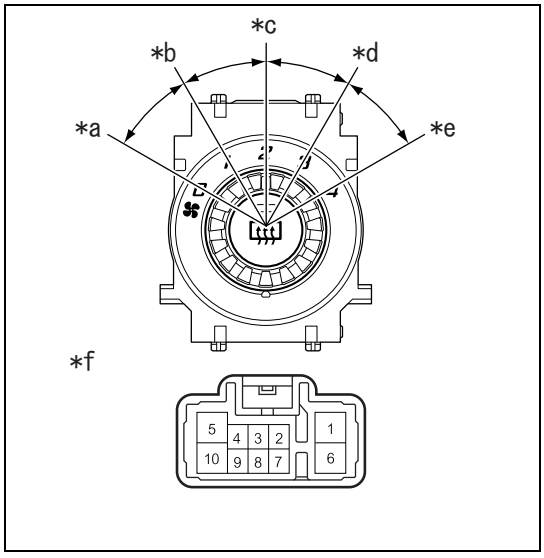

2. Inspection of heater control SUB-ASSY
   (1) Check the resistance between the connector terminals.
   Resistance

Inspection terminals	Inspection conditions	Standard value
Each terminal - 5	Fan OFF	10 kΩ or more
10 - 5	Fan LO	Less than 1 Ω
10 - 5 - 3	Fan LO - M1	Less than 1 Ω
10 - 5 - 3	Fan M1	Less than 1 Ω
10 - 5 - 3 - 6	Fan M1 - M2	Less than 1 Ω
10 - 5 - 6	Fan M2	Less than 1 Ω
10 - 5 - 6 - 1	Fan M2 - HI	Less than 1 Ω
10 - 5 - 1	Fan HI	Less than 1 Ω

Captions in illustration

*a	OFF
*b	LO
*c	M1
*d	M2
*e	HI
*f	Connector not connected (Heater control SUB-ASSY)

AC

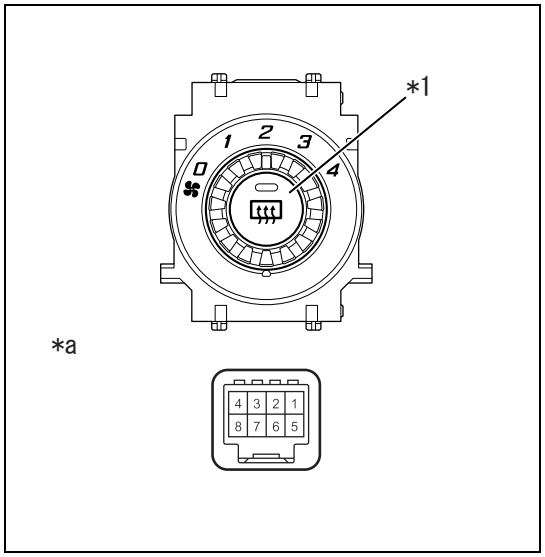

(2) Check the resistance between the connector terminals.
Resistance

Inspection terminals	Inspection conditions	Standard value
2- 4	Rr DEF switch OFF	10 kΩ or more
2- 4	Rr DEF switch ON	Less than 1 Ω

Captions in illustration

*1	Rr DEF switch
*a	Connector not connected (Heater control SUB-ASSY)

(3) Check the illumination when battery voltage is applied between the terminals.

Criteria

Battery connection	Criteria
Battery positive →7 Battery ground →5	Illumination ON

(4) Check the indicator when battery voltage is applied between the terminals.

Criteria

Inspection terminals	Inspection conditions	Standard value
Battery positive →6 Battery ground →8	Rr DEF switch OFF	Off
Battery positive →6 Battery ground →8	Rr DEF switch ON	Light turns on.

3. Inspection of heater control SUB-ASSY NO.1

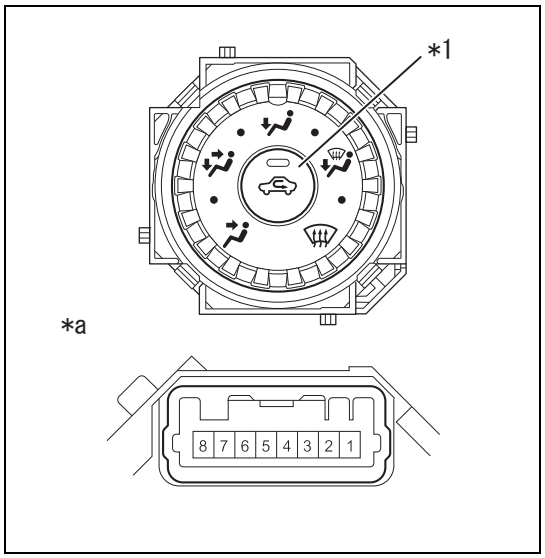

Captions in illustration

*1	FRS switch
*a	Connector not connected (Heater control SUB-ASSY NO.1)

(1) Check the illumination when battery voltage is applied between the terminals.

Criteria

Battery connection	Criteria
Battery positive →7 Battery ground →6	Illumination ON

(2) Check the indicator when battery voltage is applied between the terminals.

Resistance

Inspection terminals	Inspection conditions	Standard value
Battery positive →5 Battery ground →4	FRS switch OFF	Off
Battery positive →5 Battery ground →4	FRS switch ON	Light turns on.

AC

Relay

Unit inspection

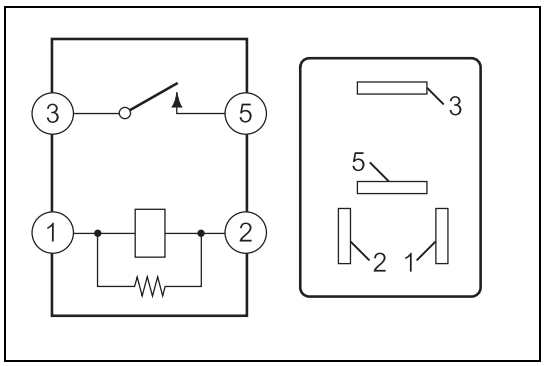

1. Inspection of heater relay
   (1) Resistance check
      (a)Check the resistance between the connector terminals.

Resistance

Inspection terminals	Inspection conditions	Standard value
3 ←→5	Always	10 kΩ or more
3 ←→5	Apply battery voltage between terminals 1 ←→2.	Less than 1 Ω

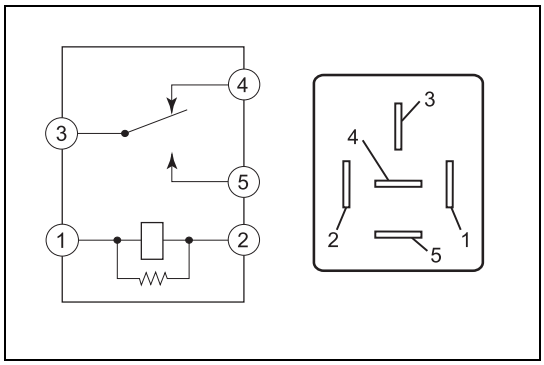

2. Inspection of blower motor relay ASSY
   (1) Resistance check
      (a)Check the resistance between the connector terminals.

Resistance

Inspection terminals	Inspection conditions	Standard value
3 ←→4	Always	Less than 1 Ω
3 ←→4	Apply battery voltage between terminals 1 ←→2.	10 kΩ or more
3 ←→5	Always	10 kΩ or more
3 ←→5	Apply battery voltage between terminals 1 ←→2.	Less than 1 Ω

AC

AC

Cigarette lighter/accessory socket (interior)

Power supply outlet socket (installed to the front side)
Exploded view PI-2
Removal PI-2
Installation PI-3
Power supply outlet socket (installed to the rear side)
Exploded view PI-4
Removal PI-4
Installation PI-5

Power supply outlet socket (installed to the front side)

Exploded view

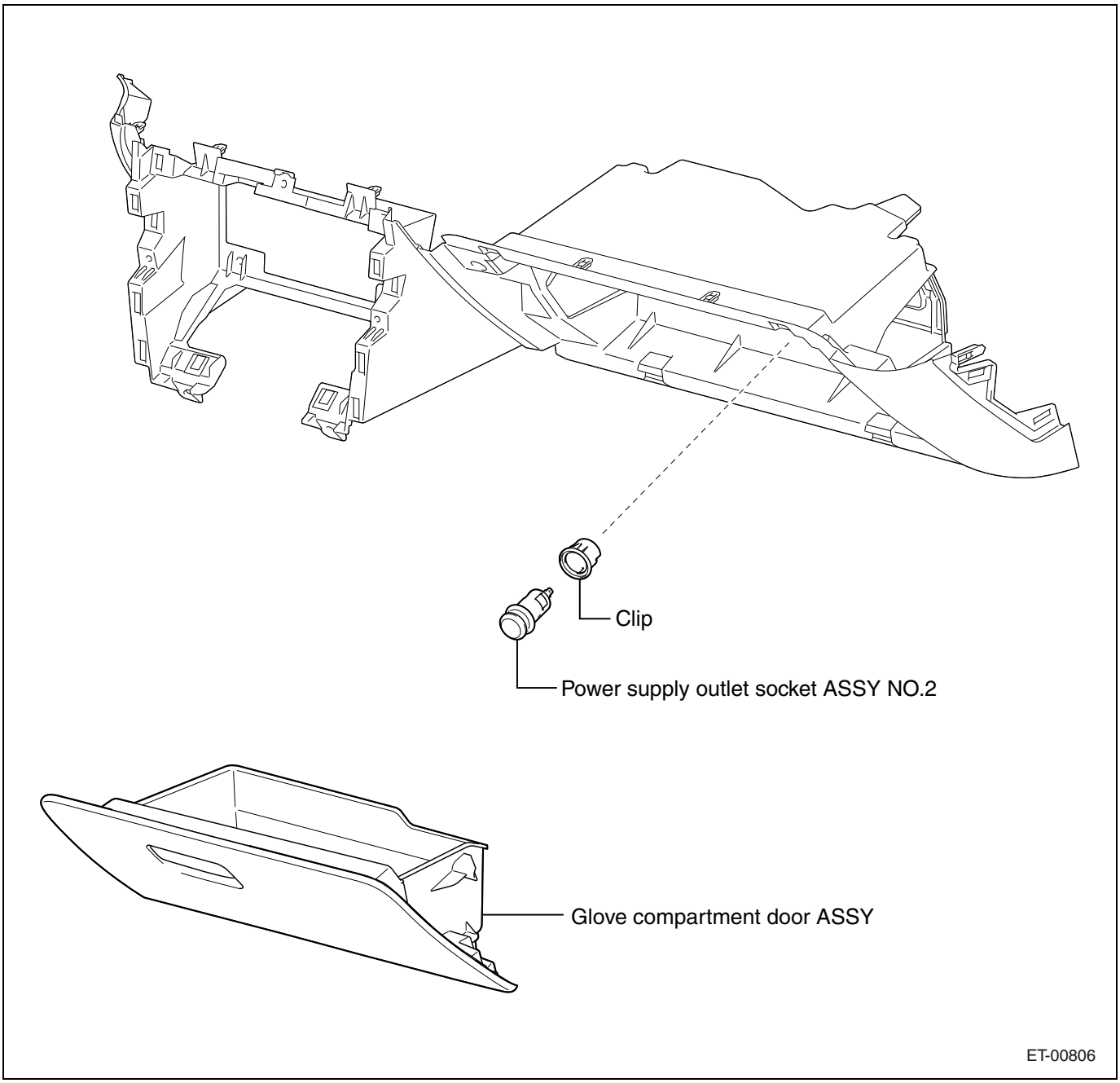

PI

Removal

1. Removal of glove compartment door ASSY (Refer to IT - 25)

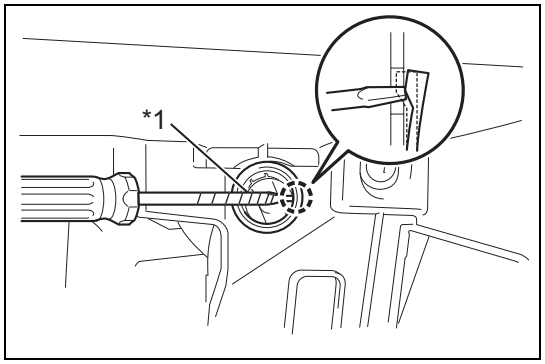

2. Removal of power supply outlet socket ASSY NO.2
   (1) While pressing the inner claw of power supply outlet socket ASSY NO.2 with a flat tip screwdriver wrapped with protective tape, pull the ASSY toward you.

Captions in illustration

*1	Protective tape

   (2) Disconnect the connector and remove power supply outlet socket ASSY NO.2.
   NOTE:
   If it is difficult to remove the ASSY, remove the instrument panel SUB-ASSY LWR and release the claw from behind.

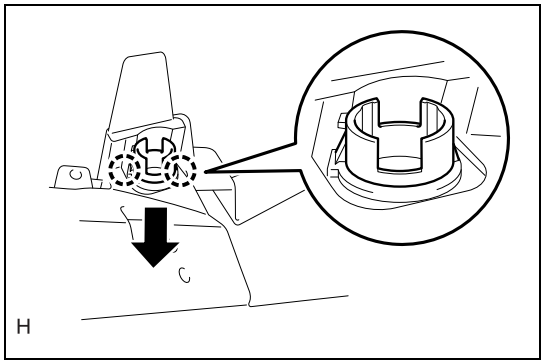

3. Removal of clip
   (1) Release the 2 claws and remove the clip.

Installation

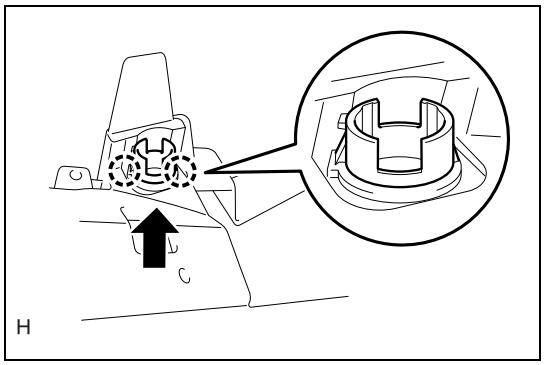

1. Installation of clip
   (1) Engage the 2 claws and install the clip.

2. Installation of power supply outlet socket ASSY NO.2
   (1) Connect the connector.

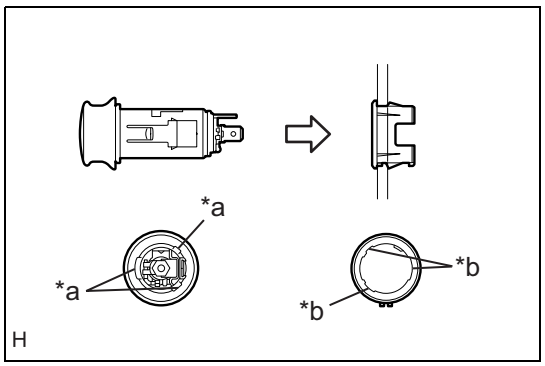

   (2) Align the groove of the clip with the rib of power supply outlet socket ASSY NO.2 as shown in the figure, and install ASSY NO.2.

Captions in illustration

*a	Rib
*b	Groove

3. Installation of glove compartment door ASSY (Refer to IT - 29)

PI

Power supply outlet socket (installed to the rear side)

Exploded view

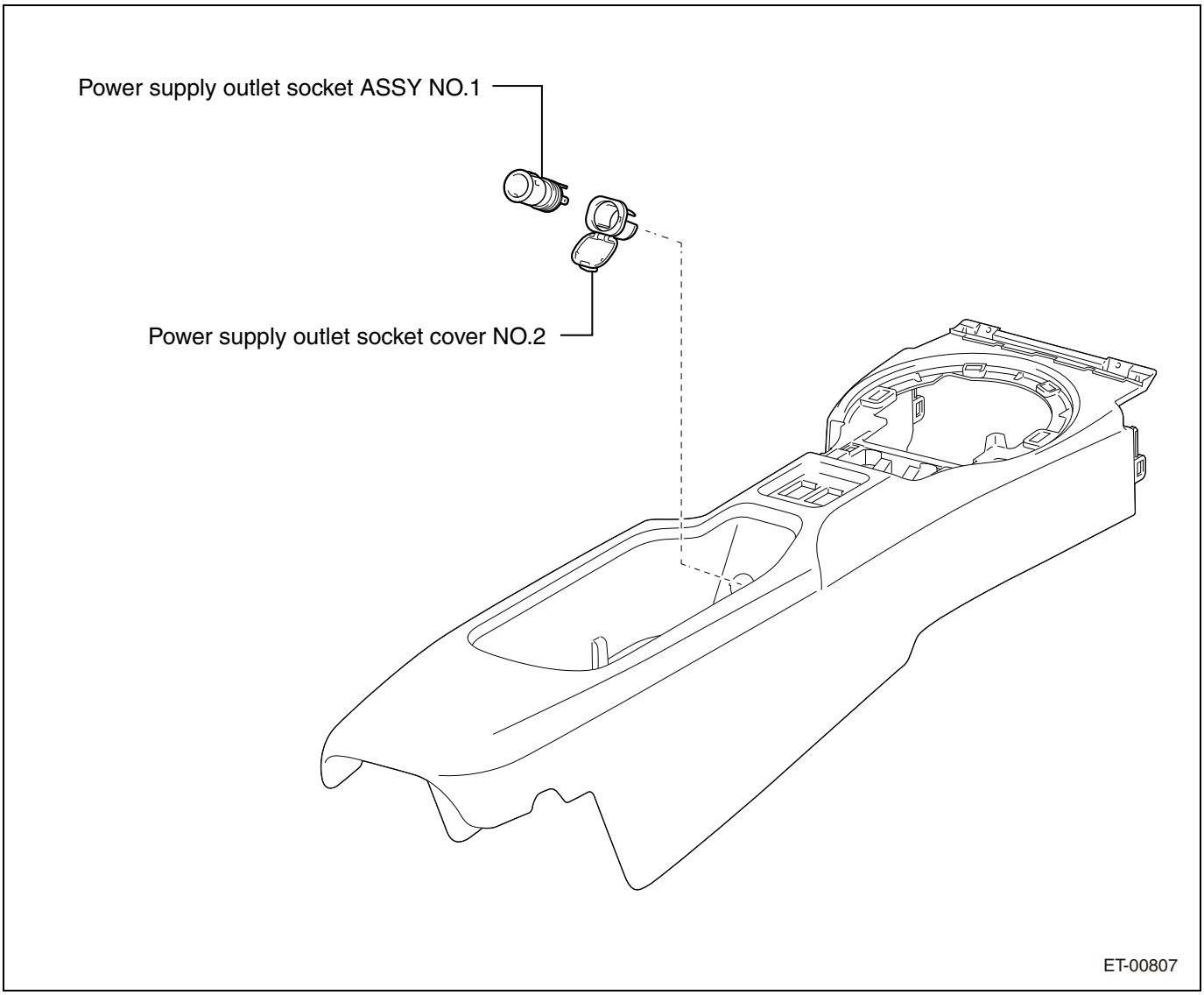

Removal

1. Removal of console box ASSY (Refer to IT - 33)

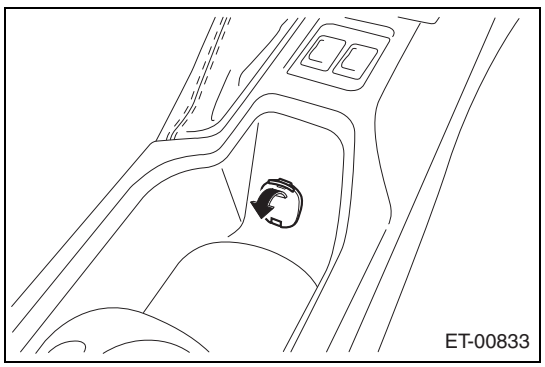

2. Removal of power supply outlet socket ASSY NO.1
   (1) Open the lid of power supply outlet socket cover NO.2.

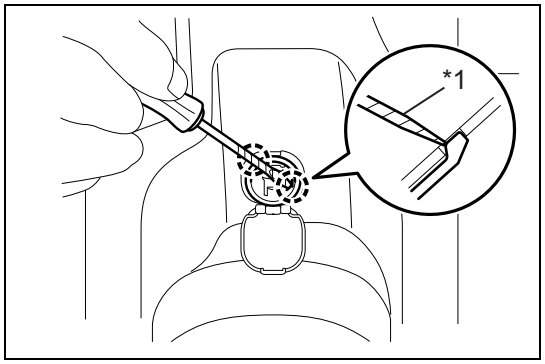

(2) Release the 2 claws with a flat tip screwdriver wrapped with protective tape, and remove power supply outlet socket ASSY NO.1.

Captions in illustration

*1	Protective tape

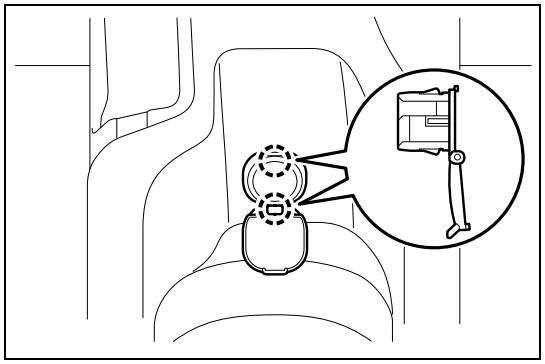

3. Removal of power supply outlet socket cover NO.2
   (1) Release the 2 claws and remove power supply outlet socket cover NO.2.

Installation

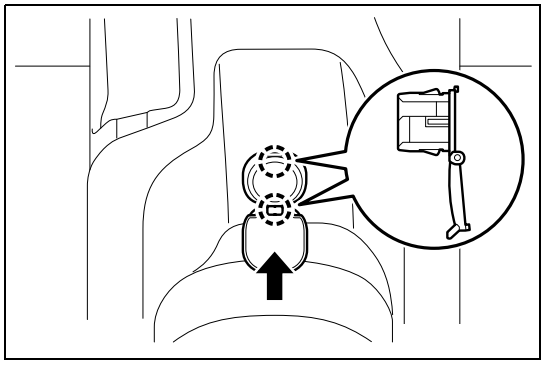

1. Installation of power supply outlet socket cover NO.2
   (1) Engage the 2 claws and install power supply outlet socket cover NO.2.

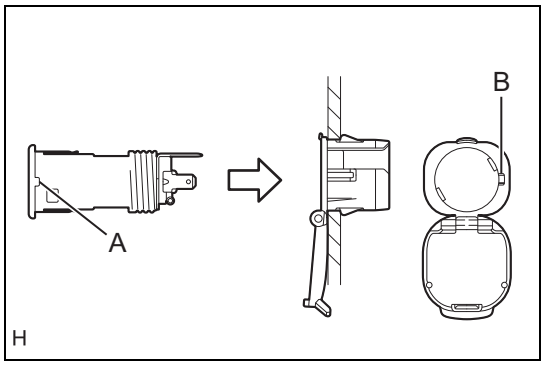

2. Installation of power supply outlet socket ASSY NO.1
   (1) Align portion A of power supply outlet socket ASSY NO.1 with portion B of power supply outlet socket cover NO.2 as shown in the figure.
   (2) Engage the 2 claws and install power supply outlet socket ASSY NO.1 to power supply outlet socket cover NO.2.

3. Installation of console box ASSY (Refer to IT - 38)

PI

Instrument panel / body interior

Instrument panel UPR

Precautions IT-2
Exploded view IT-3
Removal. IT-5
Disassembly. IT-10
Assembly IT-12
Installation IT-15

Instrument panel LWR

Precautions IT-18
Exploded view IT-18
Removal. IT-21
Disassembly. IT-27
Assembly IT-28
Installation IT-29

Front console box

Exploded view IT-31
Removal. IT-33
Disassembly. IT-38
Assembly IT-38
Installation IT-38

Roof head lining

Exploded view IT-41
Removal. IT-47
Disassembly. IT-53
Assembly IT-55
Installation IT-56

Instrument panel UPR

Precautions

1. Models with the SRS airbag and pretensioner
   (1) This section includes the service operation which may have an influence on the SRS airbag. Before starting the relevant service operations, read the working precautions and notes in the general section of this manual, ensuring the secure operation. (Refer to IN - 6)
2. Precautions during removal and installation
   (1) When releasing clips or claws with a flat tip screwdriver or molding remover, always wrap the tool with protective tape to prevent damage to parts.

Exploded view

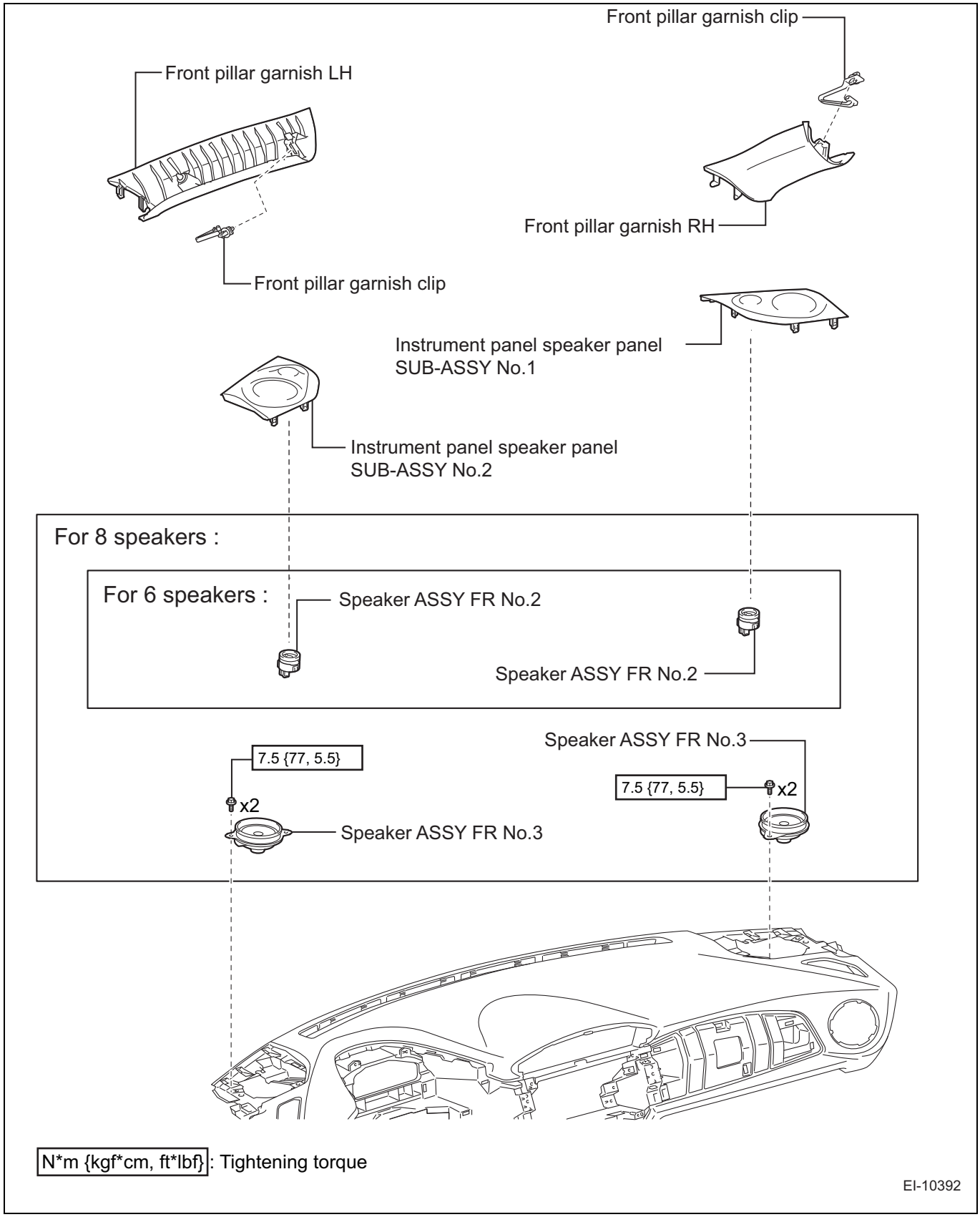

IT

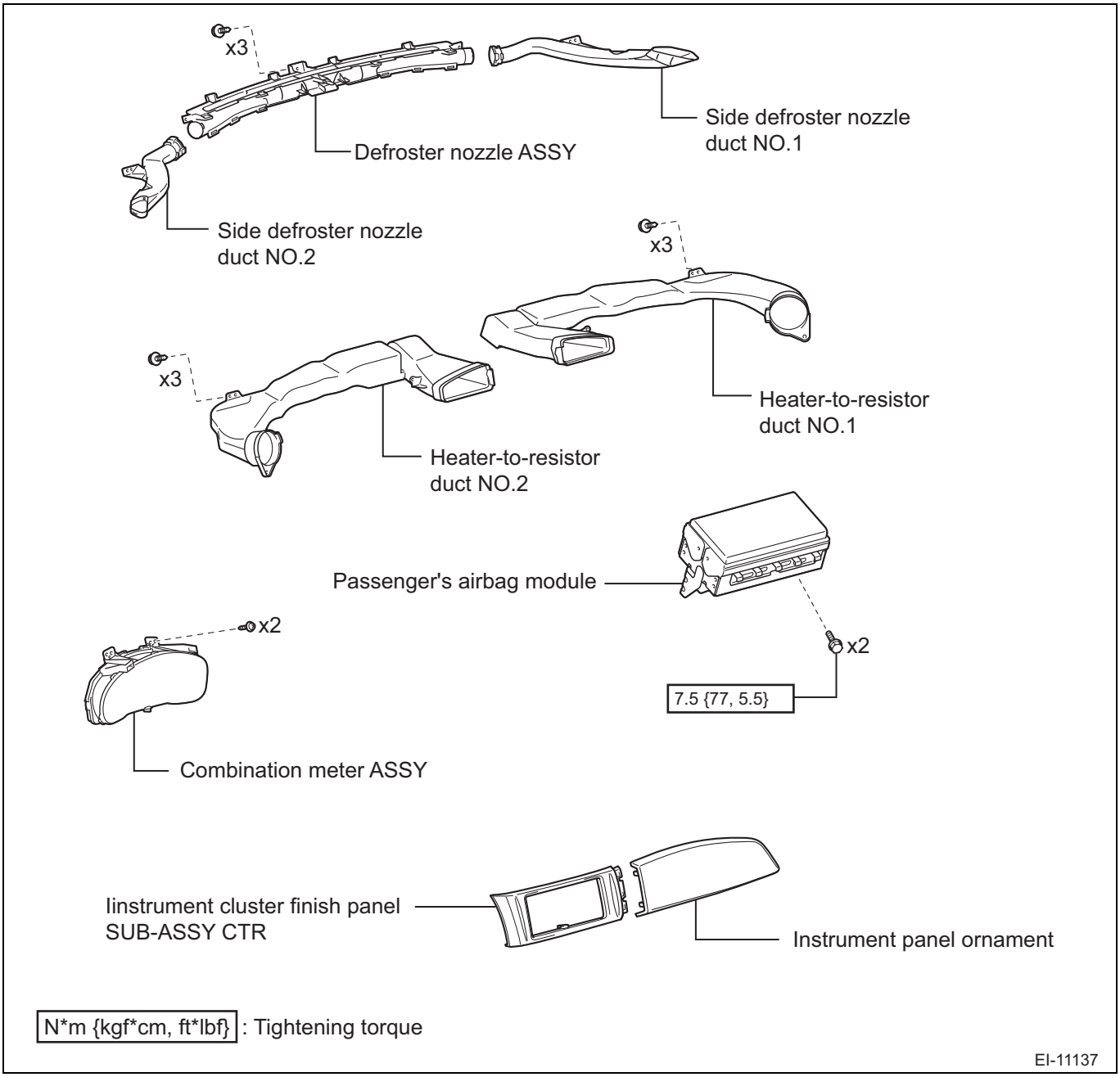

IT

N*m {kgf*cm, ft*lbf} : Tightening torque

EI-11137

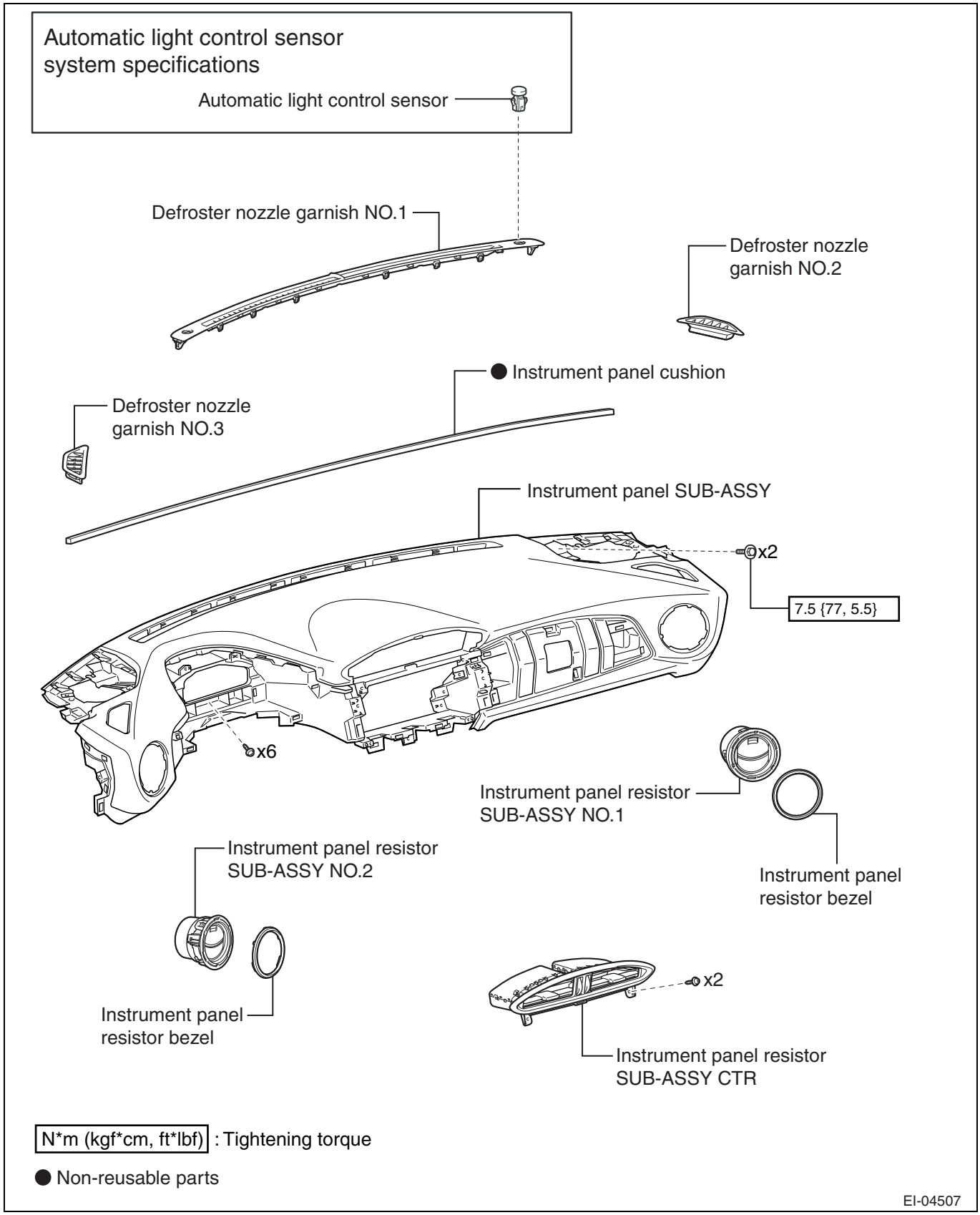

Removal

List of bolts, screws, and nuts

NOTE:

- Bolts, screws, and nuts required for removal or installation of the instrument panel UPR are indicated by symbols in context and figures.

• In the figure, D represents nominal (mm) while L represents bolt length (mm).

Symbol	Shape	Symbol	Shape	Symbol	Shape
<A>	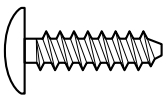 D=11.5 L=16	<B>	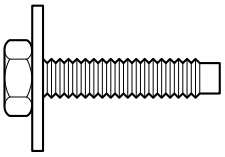 D=10 L=25	<C>	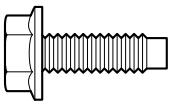 D=10 L=16

WARNING:
The following service operations include the works which may affect the SRS airbag system. Before starting work, always be sure to confirm the precautions related to the SRS airbag system. (Refer to RS - 5)

1. Precautions
   CAUTION:
   After turning the ignition switch to OFF, you may have to wait for a while before disconnecting the battery terminals. Check appropriate precautions for battery terminal disconnection before proceeding. (Refer to IN - 6)
2. Disconnection of the battery ground terminal
   (1) Turn the ignition switch to OFF, disconnect the battery ground terminal, and then wait for 60 seconds before starting the work. (Refer to IN - 6)
   WARNING:
   The air bag and pretensioner system are fitted with a backup power supply. If you start the work within 60 seconds after disconnecting the battery ground terminal, the air bag may be activated.
   CAUTION:
   To avoid damage to the molding, be sure to fully open the door glasses on both driver's and passenger's sides.
3. Removal of instrument panel SUB-ASSY LWR (Refer to IT - 21)

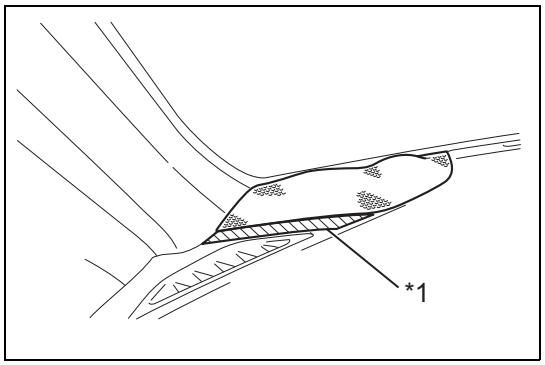

4. Removal of instrument panel speaker panel SUB-ASSY NO.1
   (1) Apply protective tape to the location shown in the figure.

Captions in illustration

*1	Protective tape

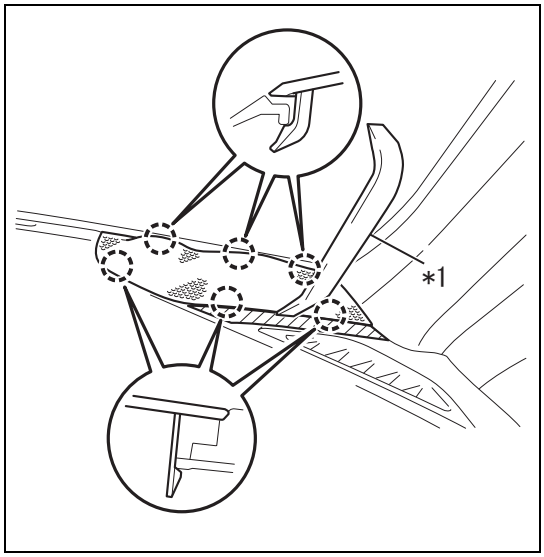

(2) Using a molding remover, release the 6 tabs.

Captions in illustration

*1	Molding remover

(3) Disconnect the speaker ASSY FR NO.2 connector, and remove the instrument panel speaker panel SUB-ASSY NO.1.

5. Removal of speaker ASSY FR NO.3 (for 8 speakers) (Refer to AV - 22)
6. Removal of instrument panel speaker panel SUB-ASSY NO.2
   NOTE:
   Remove the part in the same manner as RH side.
7. Removal of speaker ASSY FR NO.3
   NOTE:
   Remove the part in the same manner as RH side.

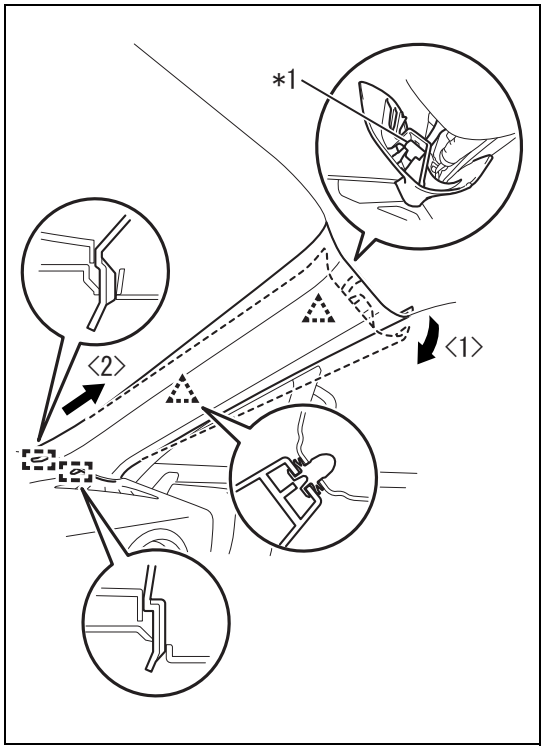

8. Removal of front pillar garnish RH
   (1) Pull the upper side of the front pillar garnish RH in the direction of arrow <1> in the figure, and release the clip and the front pillar garnish clip.

Captions in illustration

*1	Front pillar garnish clip

NOTE:
Hook the front pillar garnish clip onto the front pillar garnish RH.

(2) Pull it in the direction of arrow <2> in the figure, and release the 2 guides.

IT

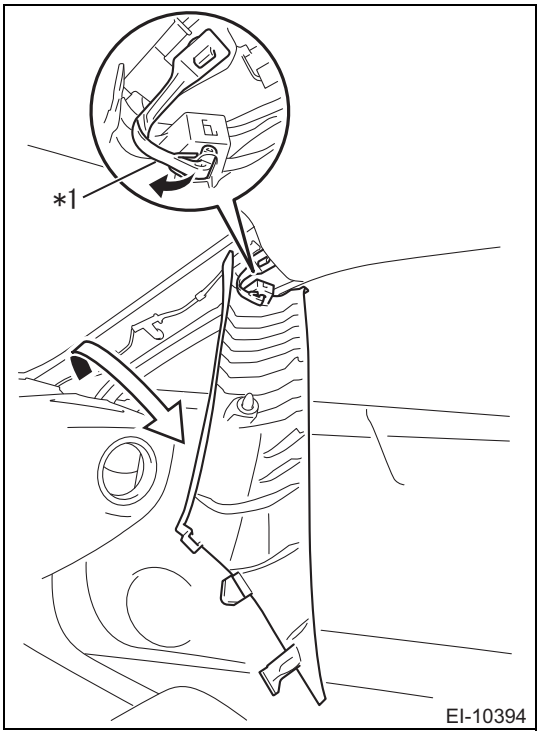

(3) Rotate the front pillar garnish RH in the direction of the arrow in the figure.
CAUTION:
When rotating, be careful not to damage the curtain airbag module.

(4) Unhook the end of the front pillar garnish clip and remove the front pillar garnish RH.
CAUTION:
- When unhooking the end of the front pillar garnish clip, do not use any tools.
- Be careful not to damage the front pillar garnish clip.

Captions in illustration

*1	Front pillar garnish clip

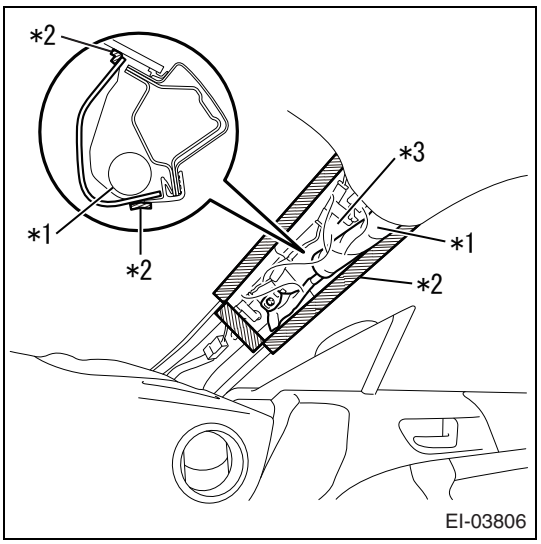

(5) Protection of curtain airbag module

Captions in illustration

*1	Curtain airbag module
*2	Packing tape
*3	Protective cover

CAUTION:
Immediately after removing the front pillar garnish RH, install the protective cover to the curtain airbag module.

(a)Wrap the air bag with cloth or nylon cloth as shown in the figure and fix both ends of the cloth or nylon cloth with packing tape.

9. Removal of front pillar garnish LH
NOTE:
Remove the part in the same manner as RH side.
10. Removal of combination meter ASSY (Refer to ME - 63)
11. Removal of the instrument panel ornament (Refer to IT - 22)
12. Removal of instrument cluster finish panel SUB-ASSY CTR (Refer to IT - 23)
13. Removal of automatic light control sensor (with light control system) (Refer to AC - 162)

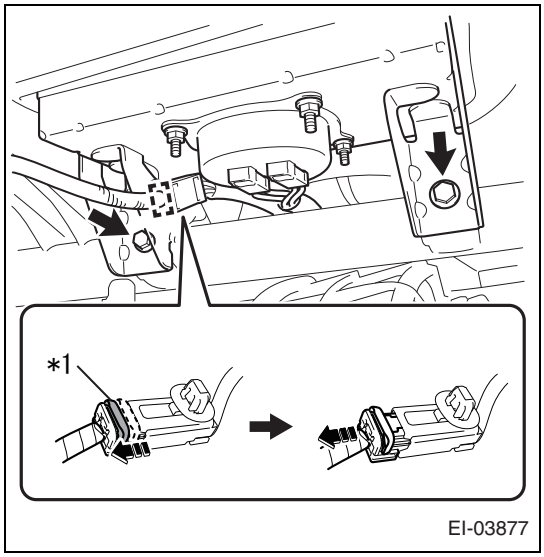

14. Disconnection of passenger airbag module
    (1) Disconnect the clamp.
    (2) Slide the slider and disconnect the passenger airbag connector.

Captions in illustration

*1	Slider

    (3) Remove the 2 bolts and disconnect the passenger airbag module.

15. Removal of instrument panel SUB-ASSY
    (1) Remove the 2 bolts and 6 screws and remove the instrument panel SUB-ASSY.

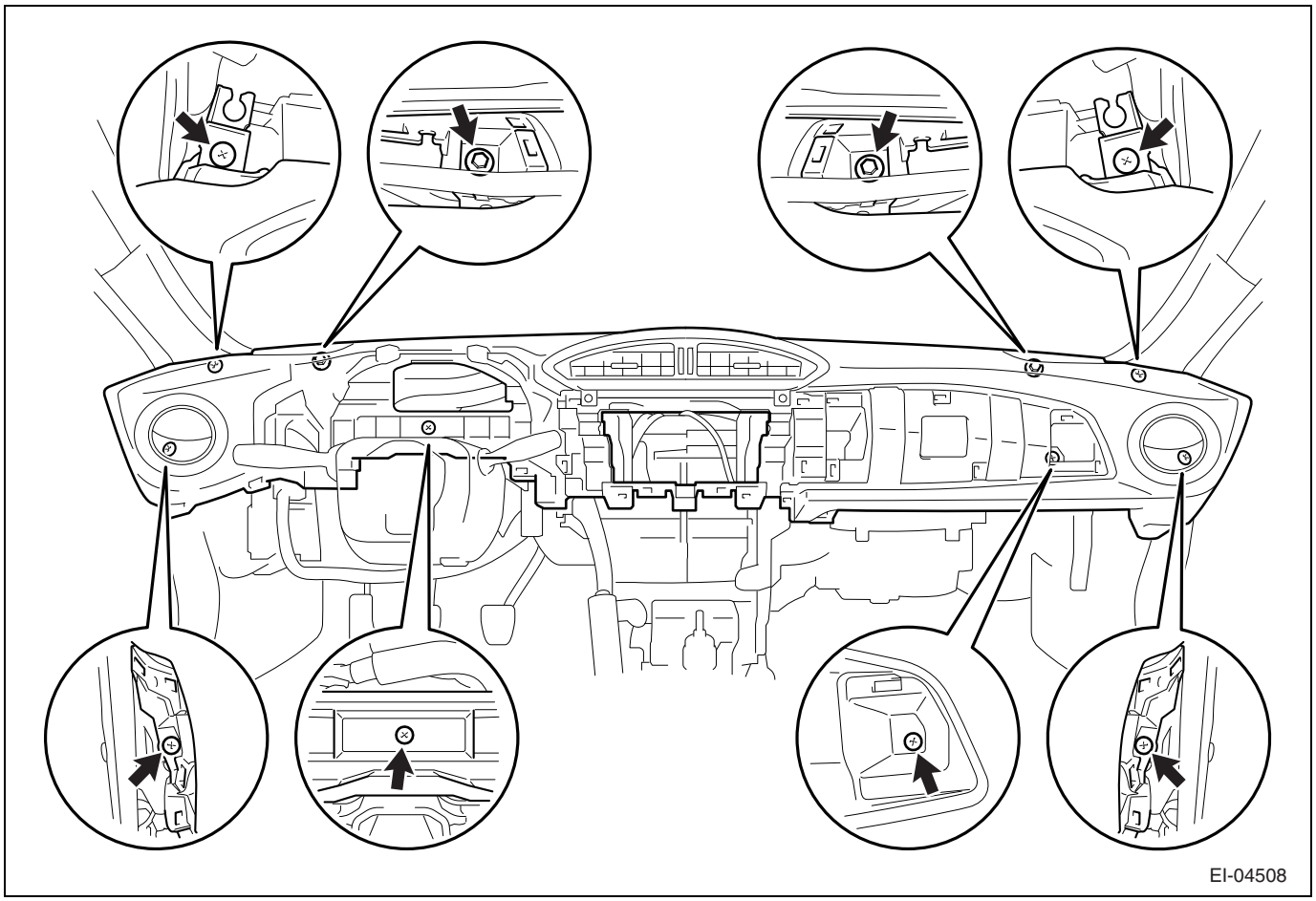

Disassembly

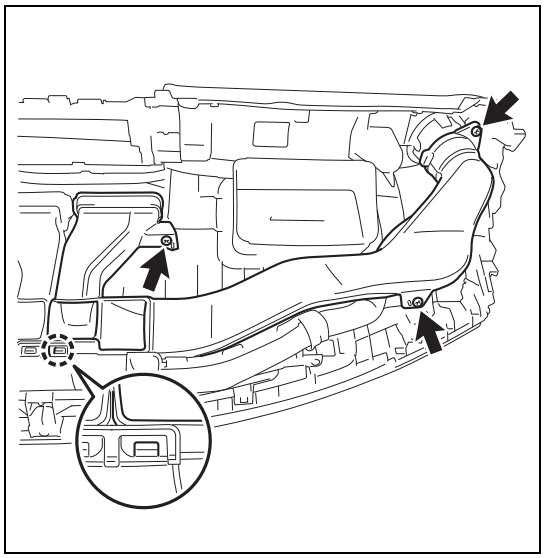

1. Removal of heater-to-resistor duct NO.2
   (1) Remove the 3 screws.
   (2) Release the claw and remove heater-to-resistor duct NO.2.

2. Removal of heater-to-resistor duct NO.1
   NOTE:
   Remove the part in the same manner as RH side.

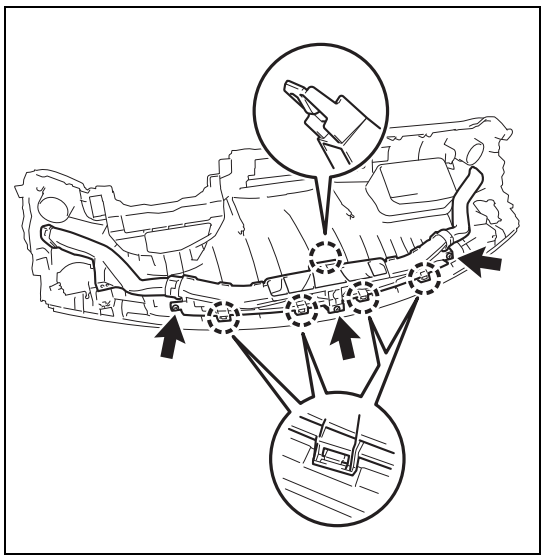

3. Removal of defroster nozzle ASSY
   (1) Remove the 5 screws.
   (2) Release the 5 claws and remove the defroster nozzle ASSY as an assembly with side defroster nozzle ducts NO.1 and NO.2.

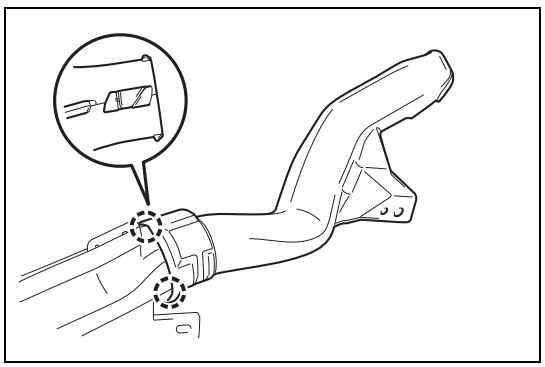

4. Removal of side defroster nozzle duct NO.1
   (1) Release the 2 claws and remove side defroster nozzle duct NO.1.

5. Removal of side defroster nozzle duct NO.2
   NOTE:
   Remove the part in the same manner as RH side.

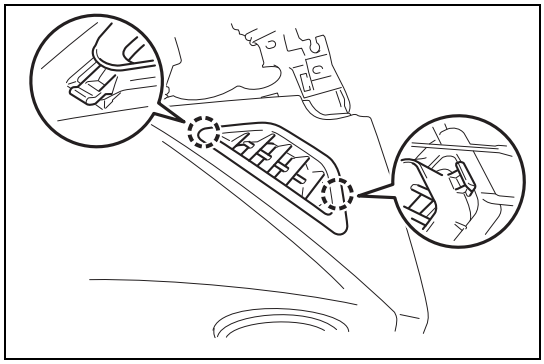

6. Removal of defroster nozzle garnish NO.2
   (1) Release the 2 claws and remove defroster nozzle garnish NO.2.

7. Removal of defroster nozzle garnish NO.3
   NOTE:
   Remove the part in the same manner as RH side.

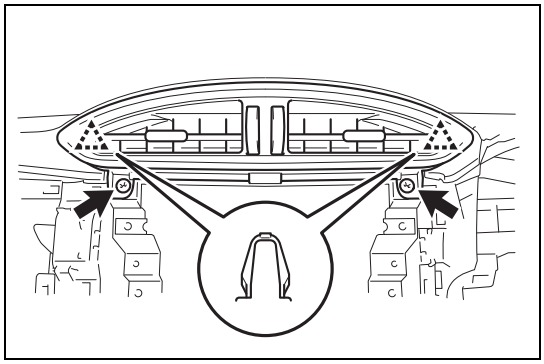

8. Removal of instrument panel resistor ASSY CTR
   (1) Remove the 2 screws.
   (2) Release the 2 clips and remove the instrument panel resistor ASSY CTR.

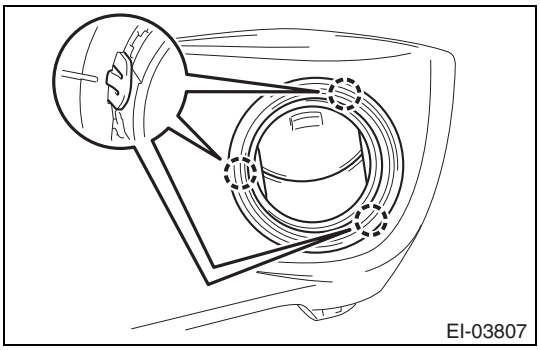

9. Removal of instrument panel resistor SUB-ASSY NO.1
   (1) Release the 3 claws and remove instrument panel resistor SUB-ASSY NO.1.

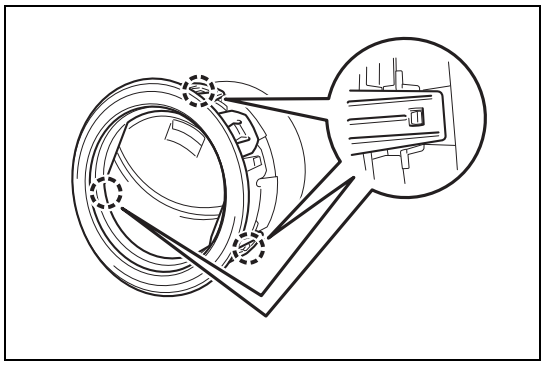

10. Removal of instrument panel resistor bezel (installed on the RH side)
    (1) Release the 3 claws and remove the instrument panel resistor bezel.

11. Removal of instrument panel resistor SUB-ASSY NO.2
    NOTE:
    Remove the part in the same manner as RH side.

12. Removal of instrument panel resistor bezel (installed on the LH side)
    NOTE:
    Remove the part in the same manner as RH side.

IT

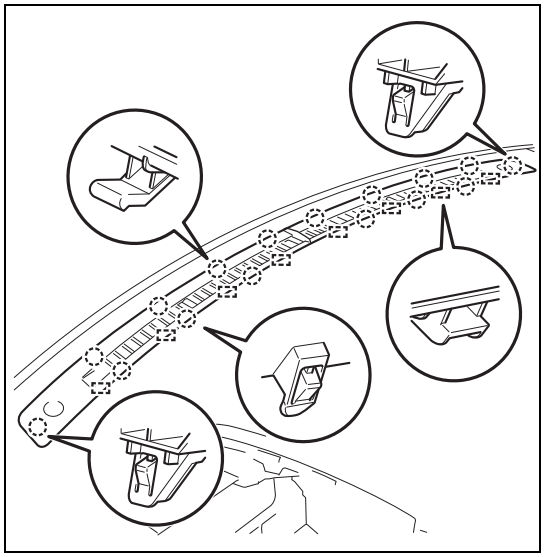

13. Removal of defroster nozzle garnish NO.1
    (1) Release the 16 claws and 8 guides and remove defroster nozzle garnish NO.1.

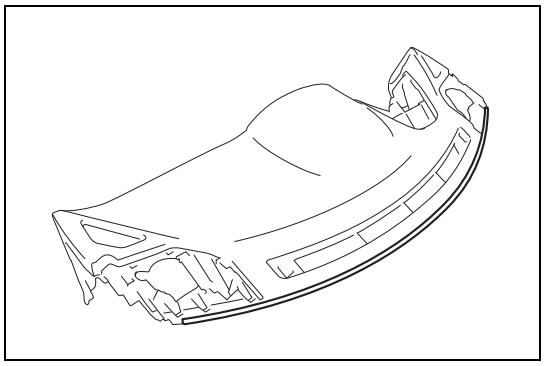

14. Removal of instrument panel cushion
    (1) Remove the instrument panel cushion.
    CAUTION:
    Be sure to replace the instrument panel cushion with a new cushion.

Assembly

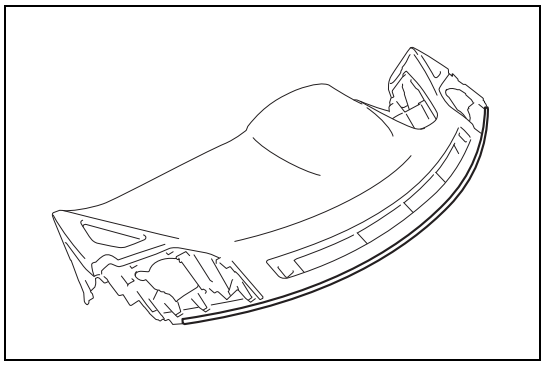

1. Installation of instrument panel cushion
    (1) Install a new instrument panel cushion.

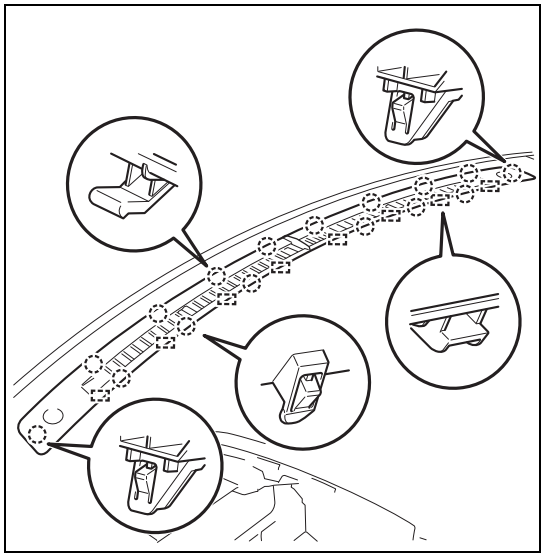

2. Installation of defroster nozzle garnish NO.1
   (1) Engage the 16 claws and 8 guides and install defroster nozzle garnish NO.1.

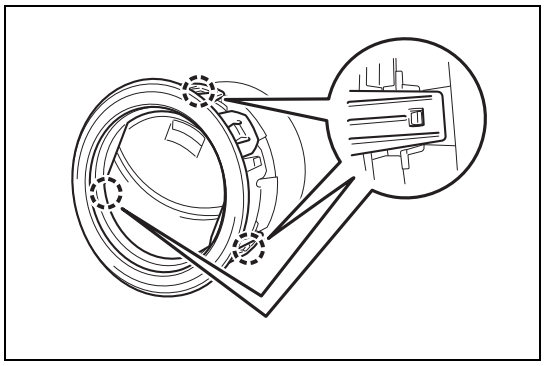

3. Installation of instrument panel resistor bezel (installed on the RH side)
   (1) Engage the 3 claws and install the instrument panel resistor bezel.

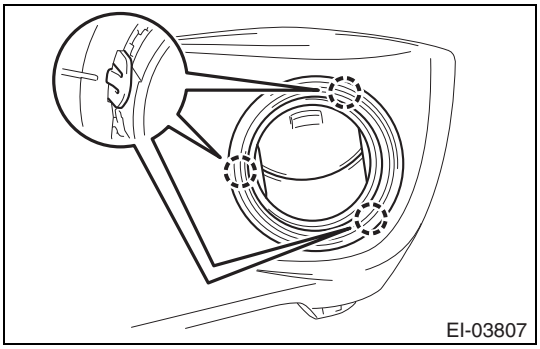

4. Installation of instrument panel resistor SUB-ASSY NO.1
   (1) Engage the 3 claws and install instrument panel resistor SUB-ASSY NO.1.

5. Installation of instrument panel resistor bezel (installed on the LH side)
   NOTE:
   Install the part in the same manner as RH side.
6. Installation of instrument panel resistor SUB-ASSY NO.2
   NOTE:
   Install the part in the same manner as RH side.

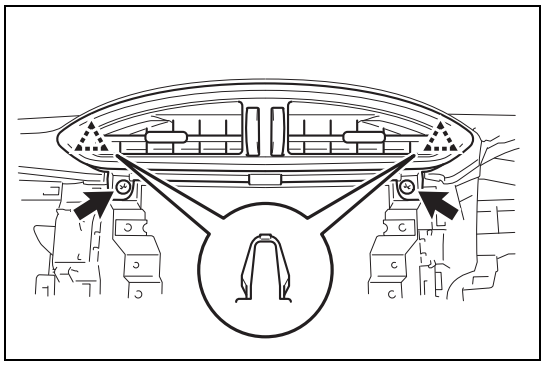

7. Installation of instrument panel resistor ASSY CTR
   (1) Engage the 2 clips and install the instrument panel resistor ASSY CTR
   (2) Install the 2 screws.

IT

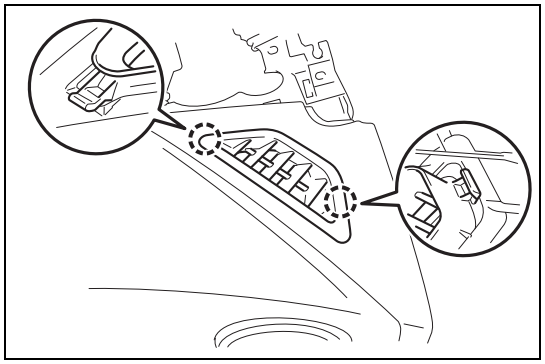

8. Installation of defroster nozzle garnish NO.2
   (1) Engage the 2 claws and install defroster nozzle garnish NO.2.

9. Installation of defroster nozzle garnish NO.3
   NOTE:
   Install the part in the same manner as RH side.

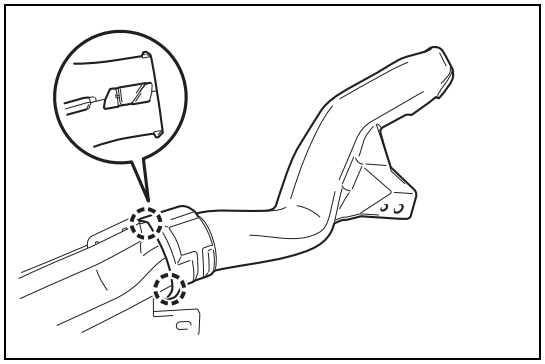

10. Installation of side defroster nozzle duct NO.1
    (1) Engage the 2 claws and install side defroster nozzle duct NO.1.

11. Installation of side defroster nozzle duct NO.2
    NOTE:
    Install the part in the same manner as RH side.

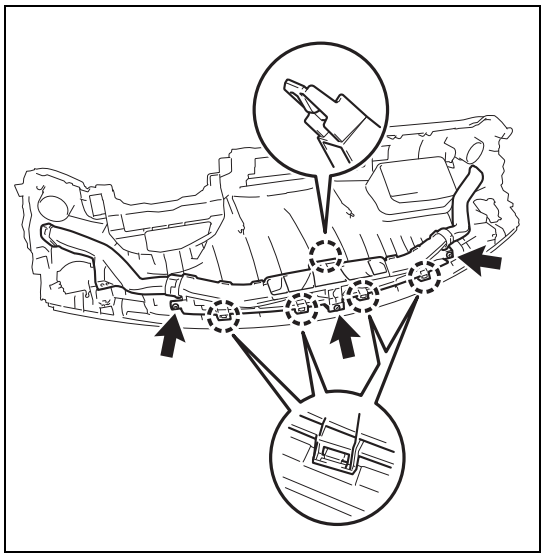

12. Installation of defroster nozzle ASSY
    (1) Fit in the 5 claws.
    (2) With the 5 screws, install the defroster nozzle ASSY as an assembly with side defroster nozzle ducts NO.1 and NO.2.

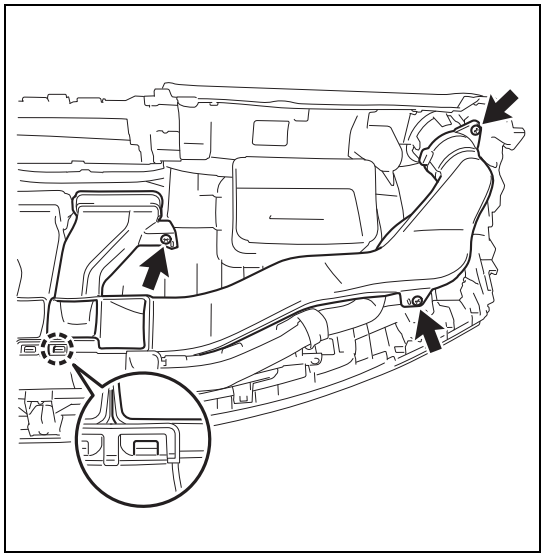

13. Installation of heater-to-resistor duct NO.2
    (1) Engage the claw and install heater-to-resistor duct NO.2.
    (2) Install the 3 screws.

14. Installation of heater-to-resistor duct NO.1
    NOTE:
    Install the part in the same manner as RH side.

Installation

1. Installation of instrument panel SUB-ASSY
   (1) With the 2 bolts and 7 screws, install the instrument panel SUB-ASSY.
   Standard value:T=7 N·m {71 kgf·cm} {5.2 ft·lbf}

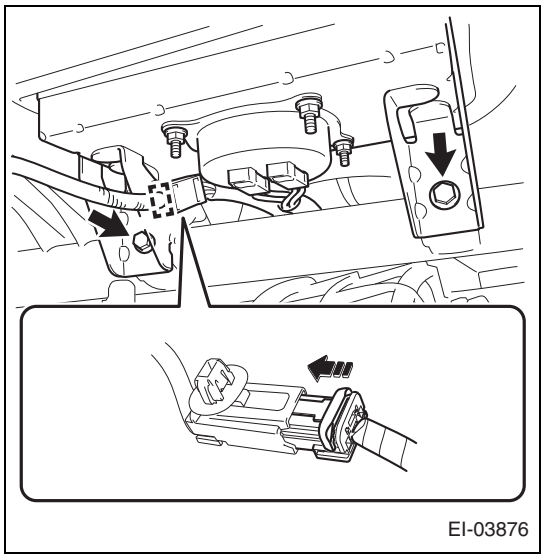

2. Connection of passenger airbag module
   (1) With the 2 bolts, connect the passenger airbag module.
   Standard value:T=7.5N·m {77kgf·cm} {5.5ft·lbf}
   (2) Connect the passenger airbag connector and clamp.

3. Installation of automatic light control sensor (with light control system) (Refer to AC - 163)
4. Installation of instrument cluster finish panel SUB-ASSY CTR (Refer to IT - 29)
5. Installation of the instrument panel ornament (Refer to IT - 29)
6. Installation of combination meter ASSY (Refer to ME - 65)
7. Installation of front pillar garnish RH
   (1) Remove the protective cover from the curtain airbag module.
   (2) Check that the front pillar garnish clip is not damaged.
   CAUTION:
   If the front pillar garnish clip is damaged, be sure to replace it with a new clip.

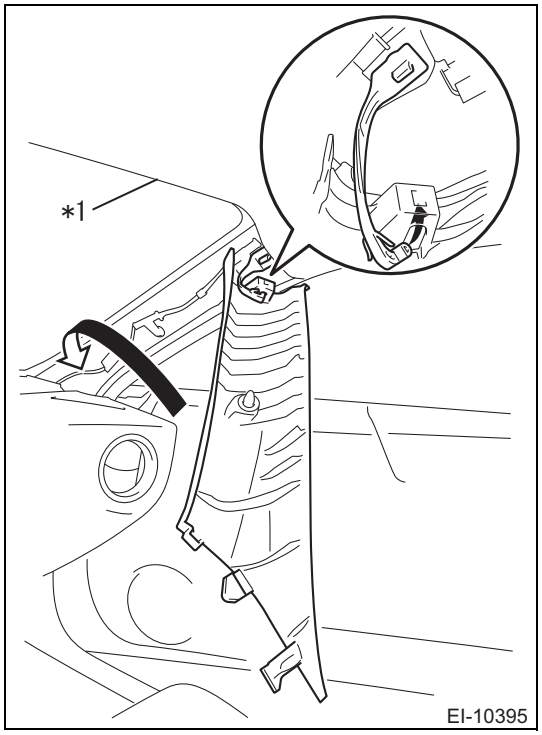

(3) As shown in the figure, hook the end of the front pillar garnish clip onto the front pillar garnish RH.

Captions in illustration

*1	Front pillar garnish clip

(4) Rotate the front pillar garnish RH in the direction of the arrow in the figure.

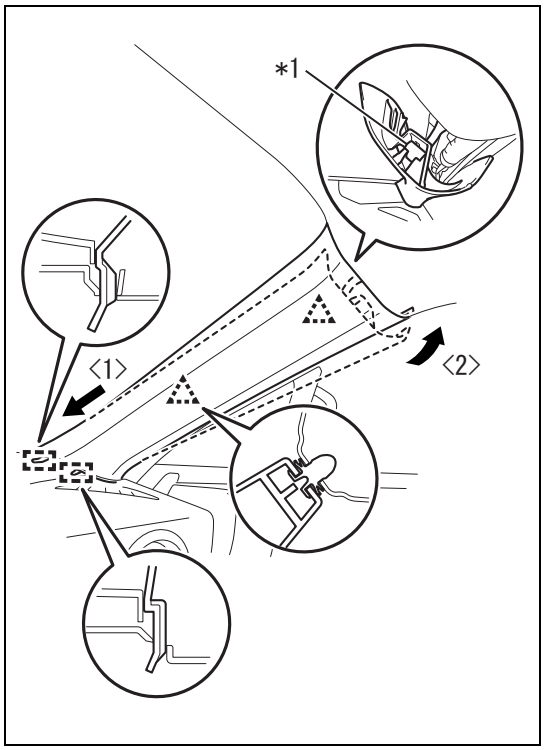

(5) Insert the 2 guides in the direction of arrow <1> in the figure.

(6) Engage the clip and front pillar garnish clip in the direction of arrow <2> in the figure, and install the front pillar garnish RH.

Captions in illustration

*1	Front pillar garnish clip

8. Installation of front pillar garnish LH
   NOTE:
   Install the part in the same manner as RH side.
9. Installation of speaker ASSY FR NO.3 (for 8 speakers) (Refer to AV - 22)

IT

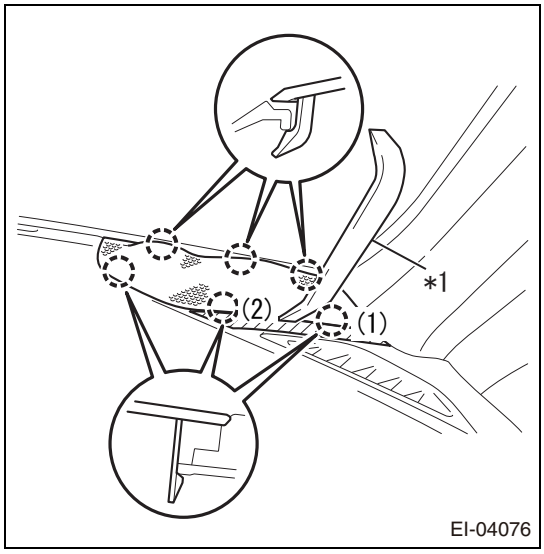

10. Installation of instrument panel speaker panel SUB-ASSY NO.1
    (1) Connect the speaker ASSY FR NO.2 connector.
    (2) In the order shown in the figure, engage the 6 claws and install instrument panel speaker panel SUB-ASSY NO.1.
    CAUTION:
    If the claws are not correctly inserted, the claws may be damaged.

Captions in illustration

*1	Molding remover

11. Installation of speaker ASSY FR NO.3 (for 8 speakers)
    NOTE:
    Install the part in the same manner as RH side.
12. Installation of instrument panel speaker panel SUB-ASSY NO.2
    NOTE:
    Install the part in the same manner as RH side.
13. Installation of instrument panel SUB-ASSY LWR (Refer to IT - 29)
14. Connection of the battery ground terminal
    Standard value:T=6.0N·m {61kgf·cm} {4.4ft·lbf}
15. Settings when removing/installing battery terminals (Refer to IN - 10)
16. Inspection of airbag warning light (Refer to RS - 53)

Instrument panel LWR

Precautions

1. Models with the SRS airbag and pretensioner
   (1) This section includes the service operation which may have an influence on the SRS airbag. Before starting the relevant service operations, read the working precautions and notes in the general section of this manual, ensuring the secure operation. (Refer to IN - 6)
2. Precautions during removal and installation
   (1) When releasing clips or claws with a flat tip screwdriver or molding remover, always wrap the tool with protective tape to prevent damage to parts.

Exploded view

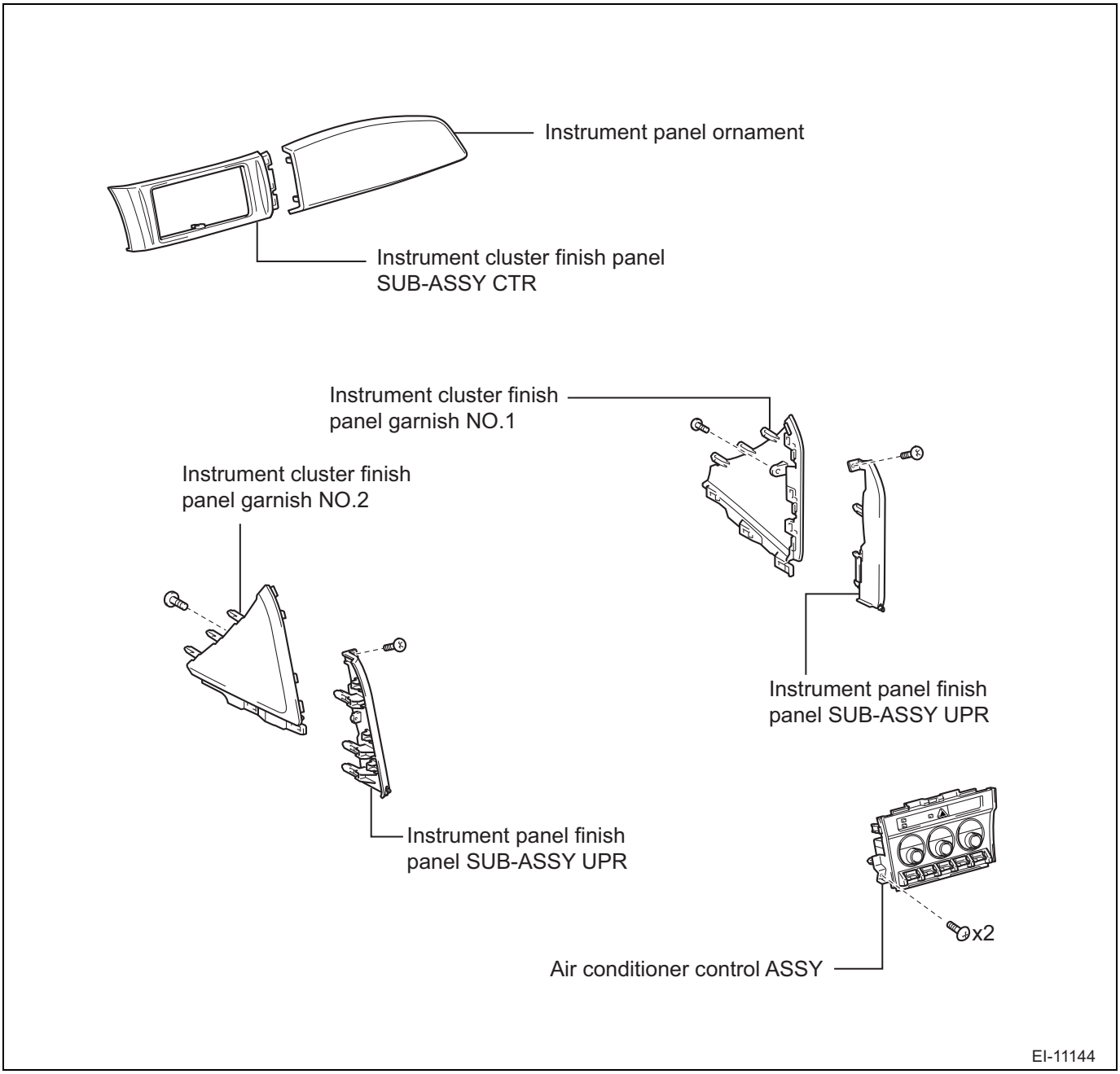

For automatic air conditioning system :

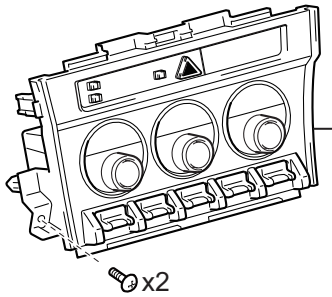

For manual air conditioning system :

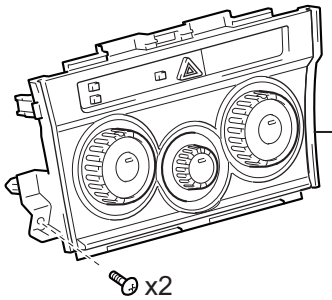

EI-10387

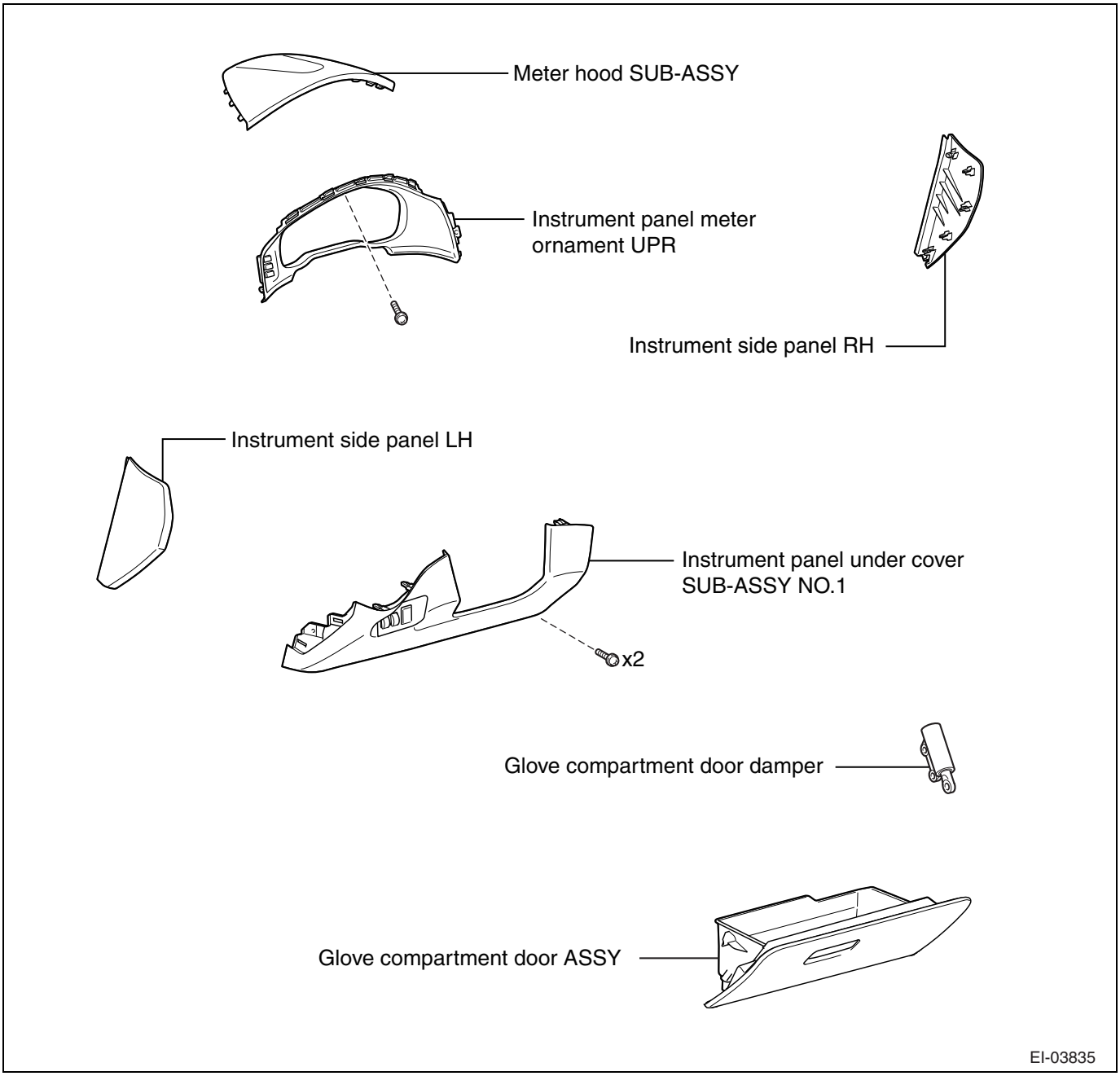
Meter hood SUB-ASSY
Instrument panel meter ornament UPR
Instrument side panel RH
Instrument side panel LH
Instrument panel under cover SUB-ASSY NO.1
x2
Glove compartment door damper
Glove compartment door ASSY
EI-03835

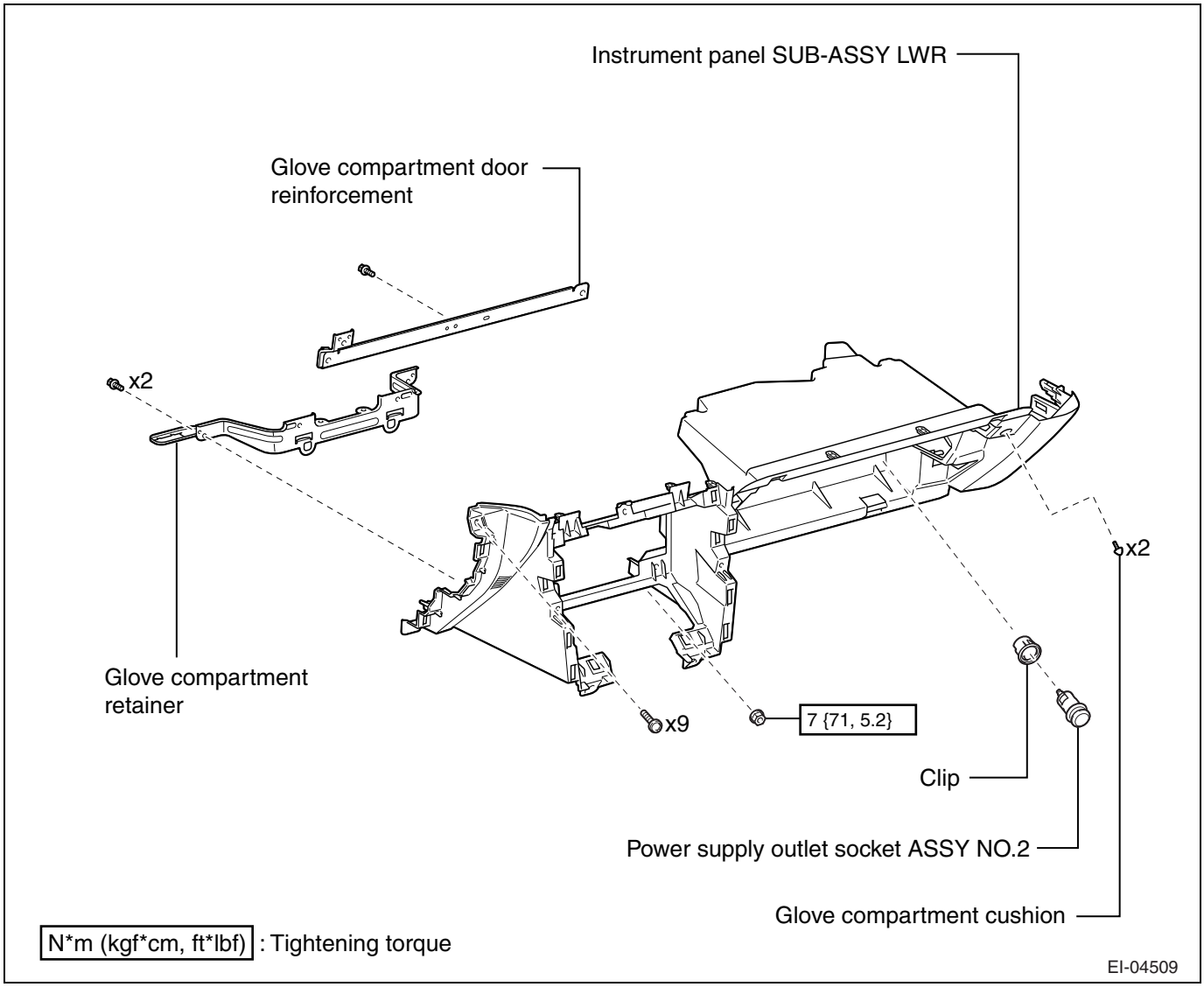

Removal

List of bolts, screws, and nuts

NOTE:

- Bolts, screws, and nuts required for removal or installation of the instrument panel LWR are indicated by symbols in context and figures.
- In the figure, D represents nominal (mm) while L represents bolt length (mm).

IT

Symbol	Shape	Symbol	Shape
<A>	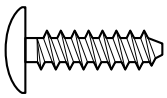 D=11.5 L=16	<B>	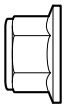 D=10 L=7

1. Precautions
   CAUTION:
   After turning the ignition switch to OFF, you may have to wait for a while before disconnecting the battery terminals. Check appropriate precautions for battery terminal disconnection before proceeding. (Refer to IN - 6)
2. Disconnection of the battery ground terminal (Refer to BH - 31)
3. Removal of console box ASSY (Refer to IT - 33)

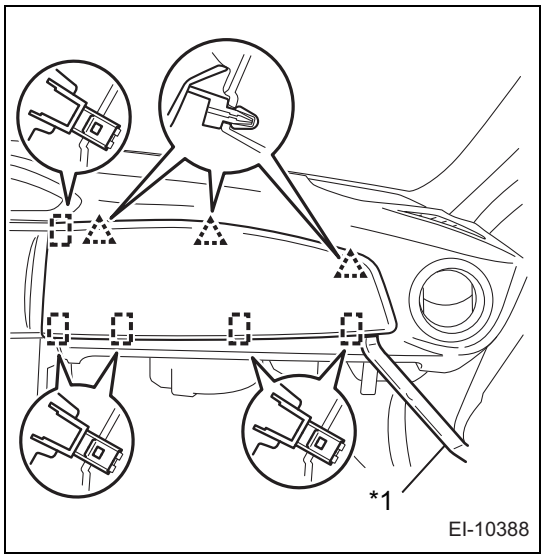

4. Removal of instrument panel ornament
   (1) Release the 8 clips and remove the instrument panel ornament.

Captions in illustration

*1	Molding remover

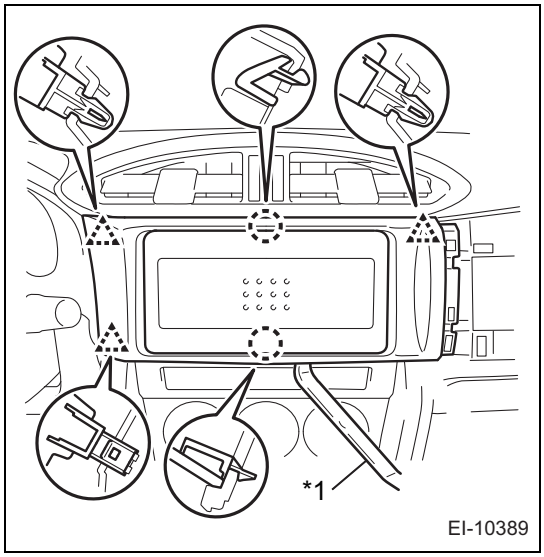

5. Removal of instrument cluster finish panel SUB-ASSY CTR
   (1) Release the 2 clips and 3 claws with a molding remover, and remove instrument cluster finish panel SUB-ASSY CTR.

Captions in illustration

*1	Molding remover

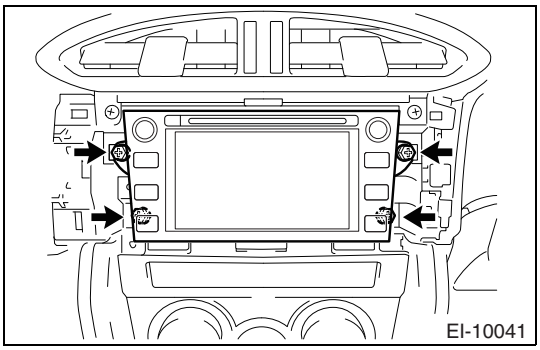

6. REMOVE RADIO&DISPLAY RECEIVER ASSEMBLY WITH BRACKET
   (1) Remove the 4 bolts to remove the radio&display receiver ASSEMBLY with bracket.

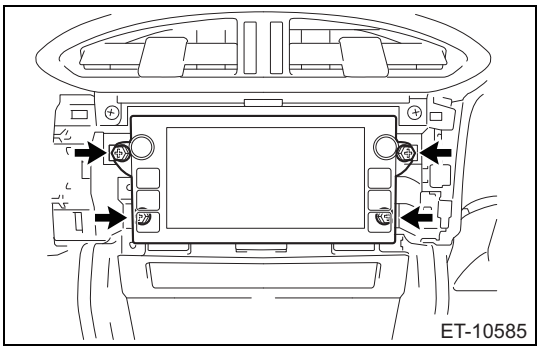

7. REMOVE NAVIGATION SYSTEM WITH BRACKET
   (1) Remove the 4 bolts to remove the navigation system with bracket.

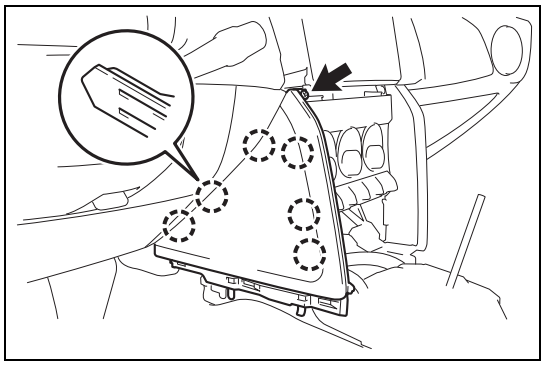

8. Removal of instrument cluster finish panel garnish NO.2
   (1) Remove the screw and release the 6 claws. Pull instrument cluster finish panel garnish NO.2 toward you and remove it.

IT

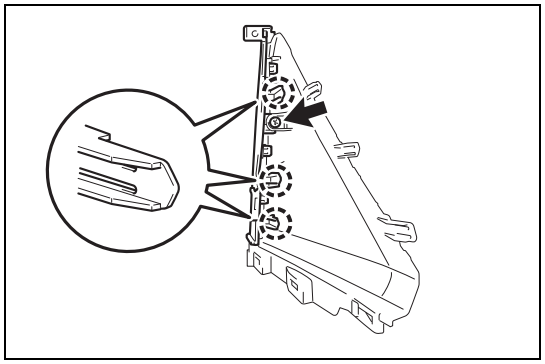

9. Removal of instrument panel finish panel SUB-ASSY UPR (installed on the LH side)
   (1) Remove the screw.
   (2) Release the 3 claws and remove the instrument panel finish panel SUB-ASSY UPR.

10. Removal of instrument cluster finish panel garnish NO.1
    NOTE:
    Remove the part in the same manner as LH side.
11. Removal of instrument panel finish panel SUB-ASSY UPR (installed on the RH side)
12. Removal of air conditioner control ASSY (for automatic air conditioning system) (Refer to AC - 170)
13. Removal of air conditioner control ASSY (for manual air conditioning system) (Refer to AC - 175)

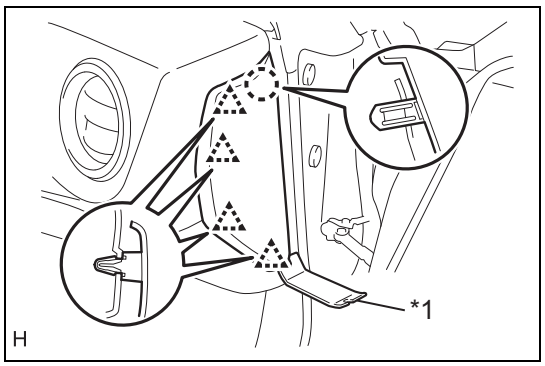

14. Removal of instrument side panel LH
    (1) Release the 4 clips and the claw with a molding remover, and remove the instrument side panel LH.

Captions in illustration

*1	Molding remover

15. Removal of instrument side panel RH
    NOTE:
    Remove the part in the same manner as LH side.

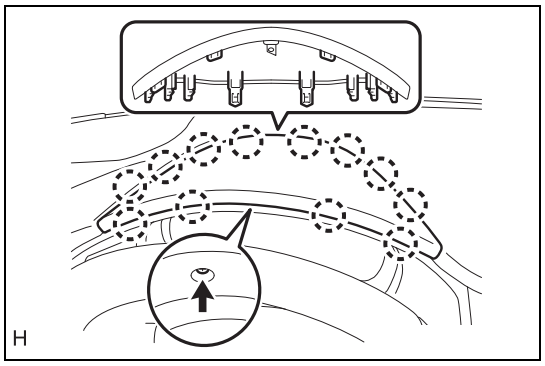

16. Removal of meter hood SUB-ASSY
    (1) Remove the screw.
    (2) Release the 12 claws. Pull the meter hood SUB-ASSY obliquely upward and toward you and remove it.

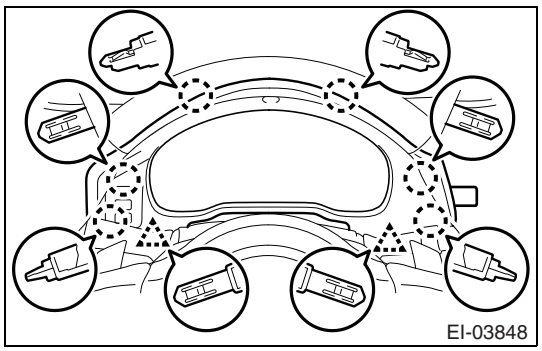

17. Removal of instrument panel meter ornament UPR
    (1) Release the 2 clips and 6 claws.

IT

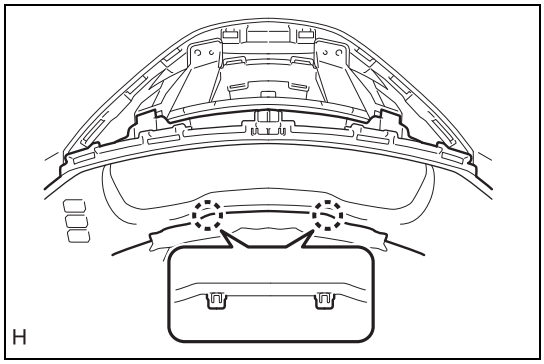

(2) Release the 2 claws connecting the instrument panel meter ornament UPR to the steering column cover.
(3) Disconnect the connector and remove the instrument panel meter ornament UPR.

18. Removal of instrument panel under cover SUB-ASSY NO.1 (Refer to ME - 68)

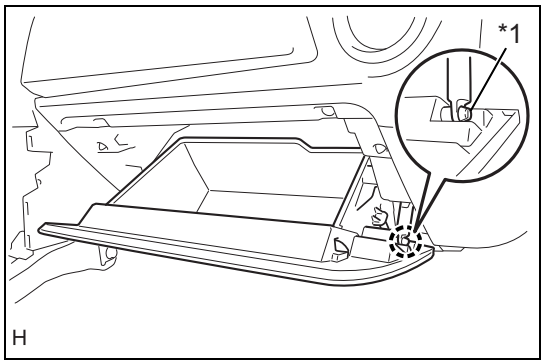

19. Removal of glove compartment door ASSY
(1) Release the claw and disconnect the glove compartment door damper.

Captions in illustration

*1	Glove compartment door damper

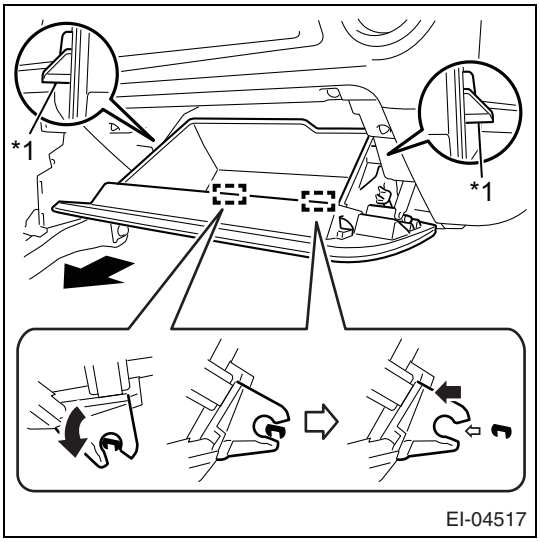

(2) Release the 2 stoppers and pull out the glove compartment door ASSY until it is level.

Captions in illustration

*1	Stopper

(3) Pull the glove compartment door ASSY horizontally, release the 2 hinges, and remove the glove compartment door ASSY.
CAUTION:
If the glove compartment door ASSY is pulled upward and removed, the hinges may be loosened. Always pull the ASSY horizontally to remove it.

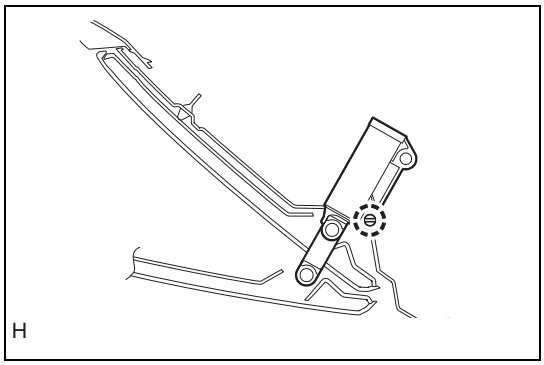

20. Removal of glove compartment door damper
(1) Release the claw and remove the glove compartment door damper.

IT

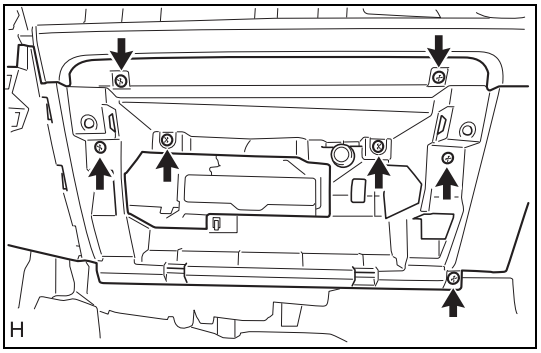

21. Removal of instrument panel SUB-ASSY LWR
    (1) Remove the 7 screws.

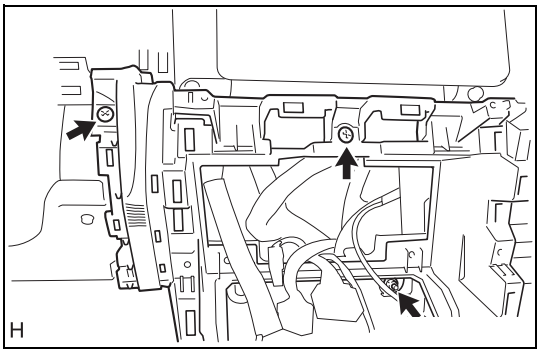

    (2) Remove the 2 screws and nuts.

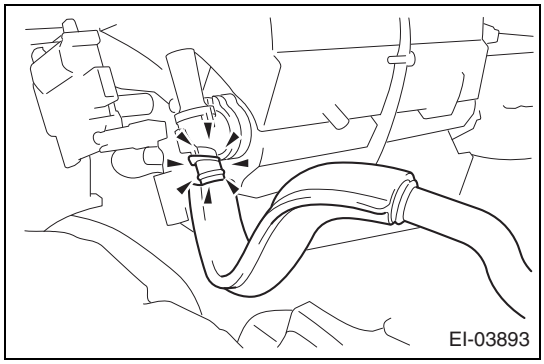

    (3) Disconnect the aspirator hose. (Automatic air conditioning system model)
    (4) Release the 14 claws, disconnect the connectors and clamps, and remove the instrument panel SUB-ASSY LWR.

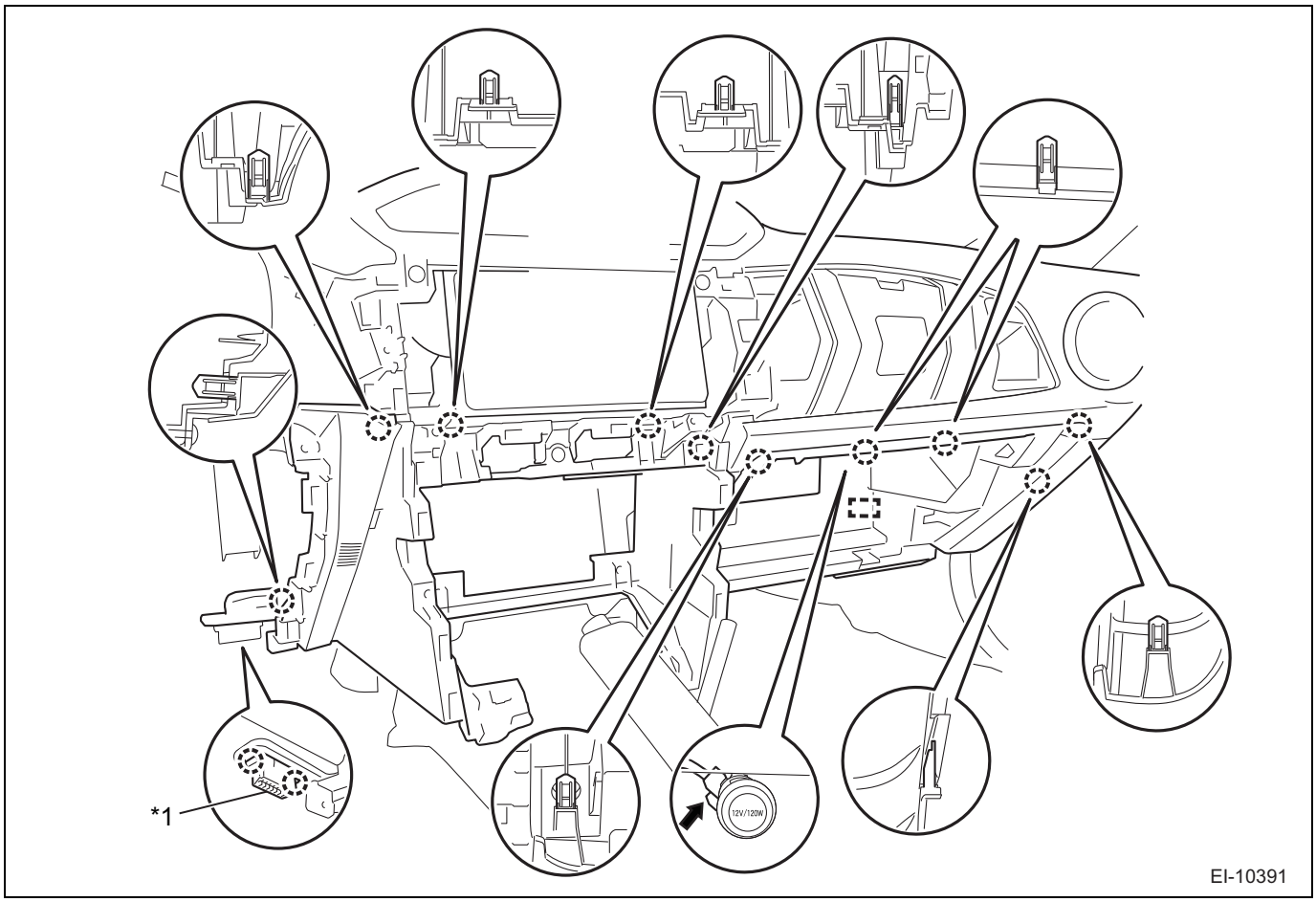

Captions in illustration

*1	Data link connector	-	-

Disassembly

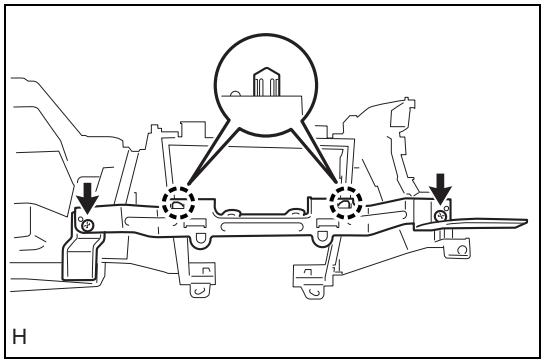

1. Removal of glove compartment retainer
   (1) Remove the 2 screws, release the 2 claws, and remove the glove compartment retainer.

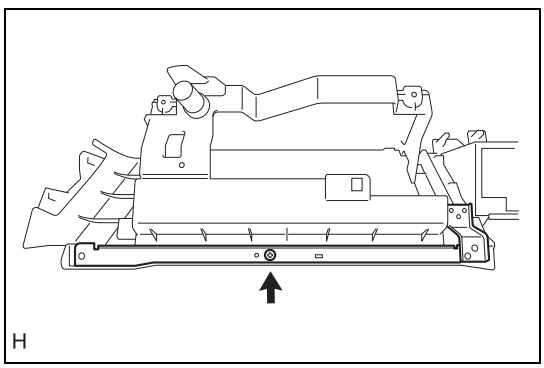

2. Removal of glove compartment door reinforcement
   (1) Remove the screw and remove the glove compartment door reinforcement.

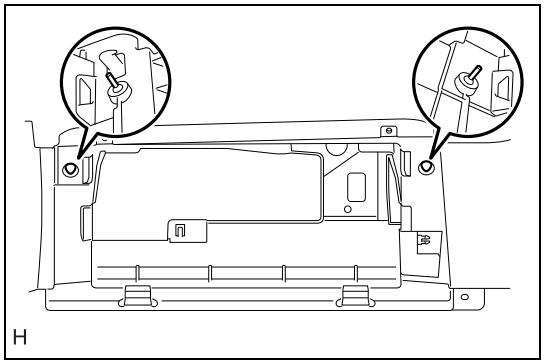

3. Removal of glove compartment cushion
   (1) Remove the 2 glove compartment cushions.
4. Removal of power supply outlet socket ASSY NO.2 (Refer to PI - 3)
5. Removal of clip (Refer to PI - 3)
6. Removal of the aspirator hose and in-vehicle sensor (automatic air conditioning system model) (Refer to AC - 108)

Assembly

1. Installation of clip (Refer to PI - 3)
2. Installation of power supply outlet socket ASSY NO.2 (Refer to PI - 3)

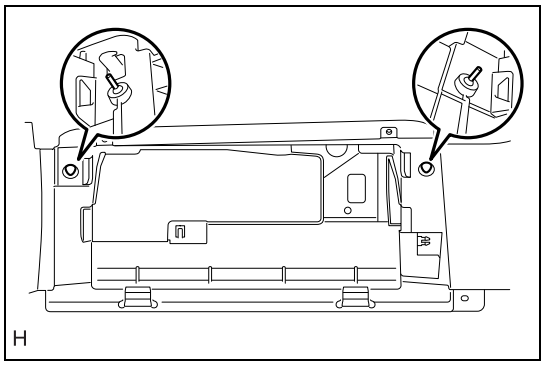

3. Installation of glove compartment cushion
   (1) Install the 2 glove compartment cushions.

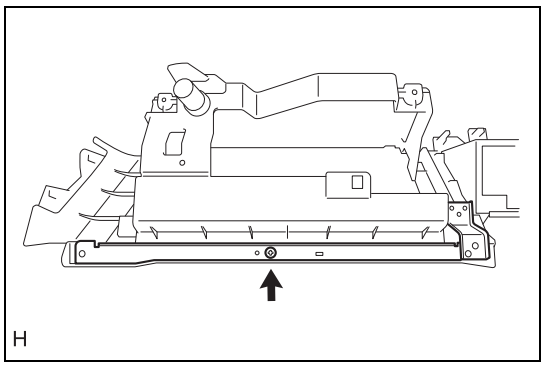

4. Installation of glove compartment door reinforcement
   (1) Install the glove compartment door reinforcement with the screw.

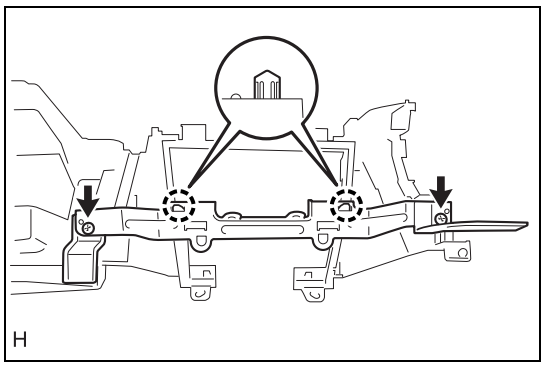

5. Installation of glove compartment retainer
   (1) Install the 2 screws, engage the 2 claws, and install the glove compartment retainer.
6. Installation of aspirator hose and in-vehicle sensor (automatic air conditioning system model) (Refer to AC - 126)

Installation

1. Installation of instrument panel SUB-ASSY LWR
   (1) Engage the 14 claws and connect the connectors and clamps.
   (2) Connect the aspirator hose. (for automatic air conditioning system)
   (3) Install the 2 screws and nuts.
   (4) With the 7 screws, install the instrument panel SUB-ASSY LWR.
2. Installation of glove compartment door damper
   (1) Engage the claw and install the glove compartment door damper.
3. Installation of glove compartment door ASSY
   (1) Engage the 2 hinges of the glove compartment door ASSY horizontally.
   (2) Engage the 2 stoppers and install the glove compartment door ASSY.
   CAUTION:
   If the stoppers are engaged from above, the hinges may be loosened. Always engage them horizontally.
   (3) Engage the claw and install the glove compartment door damper.
4. Installation of the instrument panel under cover SUB-ASSY No.1 (Refer to ME - 69)
5. Installation of instrument panel meter ornament UPR
   (1) Connect the connector.
   (2) Engage the 2 claws connecting the instrument panel meter ornament UPR to the steering column cover.
   (3) Engage the 2 clips and 6 claws and install the instrument panel meter ornament UPR.
6. Installation of meter hood SUB-ASSY
   (1) Fit in the 12 claws.
   (2) With the screw, install the meter hood SUB-ASSY.
7. Installation of instrument side panel RH
   (1) Engage the 4 clips and the claw and install the instrument panel side panel RH.
8. Installation of instrument side panel LH
   NOTE:
   Install the part in the same manner as RH side.
9. Installation of air conditioner control ASSY (for automatic air conditioning system) (Refer to AC - 171)
10. Installation of air conditioner control ASSY (for manual air conditioning system) (Refer to AC - 178)
11. Installation of instrument panel finish panel SUB-ASSY UPR (installed on the RH side)
    (1) Fit in the 3 claws.
    (2) With the screw, install the instrument panel finish panel SUB-ASSY UPR.
12. Installation of instrument cluster finish panel garnish NO.1
    (1) Fit in the 6 claws.
    CAUTION:
    If the claws are not correctly inserted, the claws may be damaged.
    (2) With the screw, install the instrument cluster finish panel garnish NO.1.
13. Installation of instrument panel finish panel SUB-ASSY UPR (installed on the LH side)
    NOTE:
    Install the part in the same manner as RH side.
14. Installation of instrument cluster finish panel garnish NO.2
    NOTE:
    Install the part in the same manner as RH side.
15. Installation of the navigation system (with bracket)
    (1) Install the navigation system (with bracket) in place using the four bolts.
16. Installation of instrument cluster finish panel SUB-ASSY CTR
    (1) Engage the 3 clips and 2 claws and install the instrument cluster finish panel SUB-ASSY CTR.
17. Installation of instrument panel ornament
    (1) Engage the 8 clips and install the instrument panel ornament.
18. Installation of console box ASSY (Refer to IT - 38)
19. Connection of the battery ground terminal
    Standard value:T=6.0N·m {61kgf·cm} {4.4ft·lbf}

IT

20. Settings when removing/installing battery terminals (Refer to IN - 10)
21. Inspection of airbag warning light (Refer to RS - 53)

Front console box

Exploded view

With smart key system:

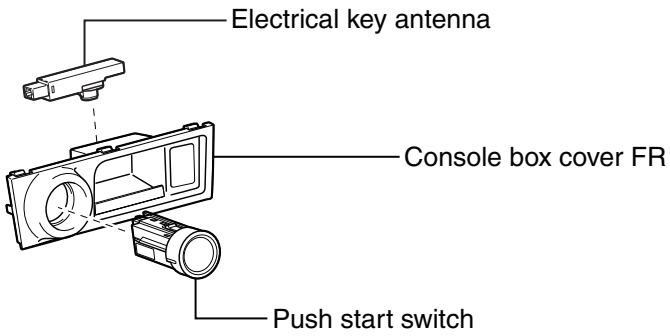

Without smart key system:

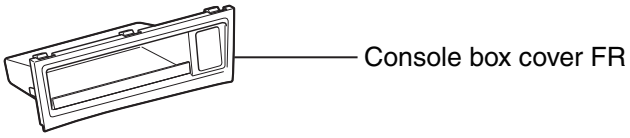

EI-03838

Transmission A/T:

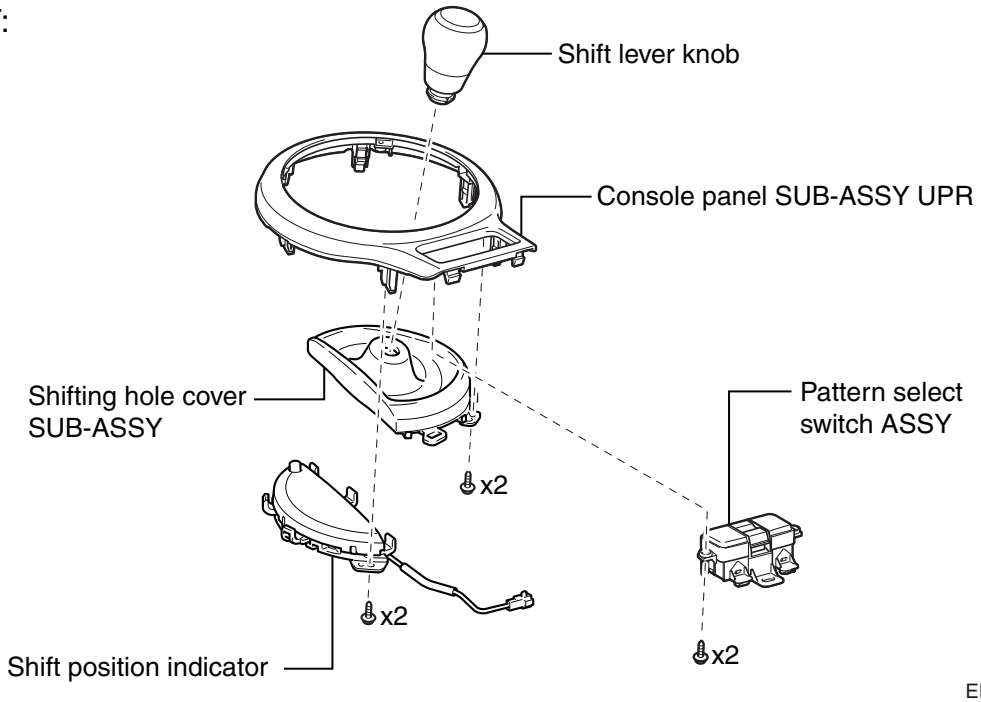

EI-03839

Transmission M/T:

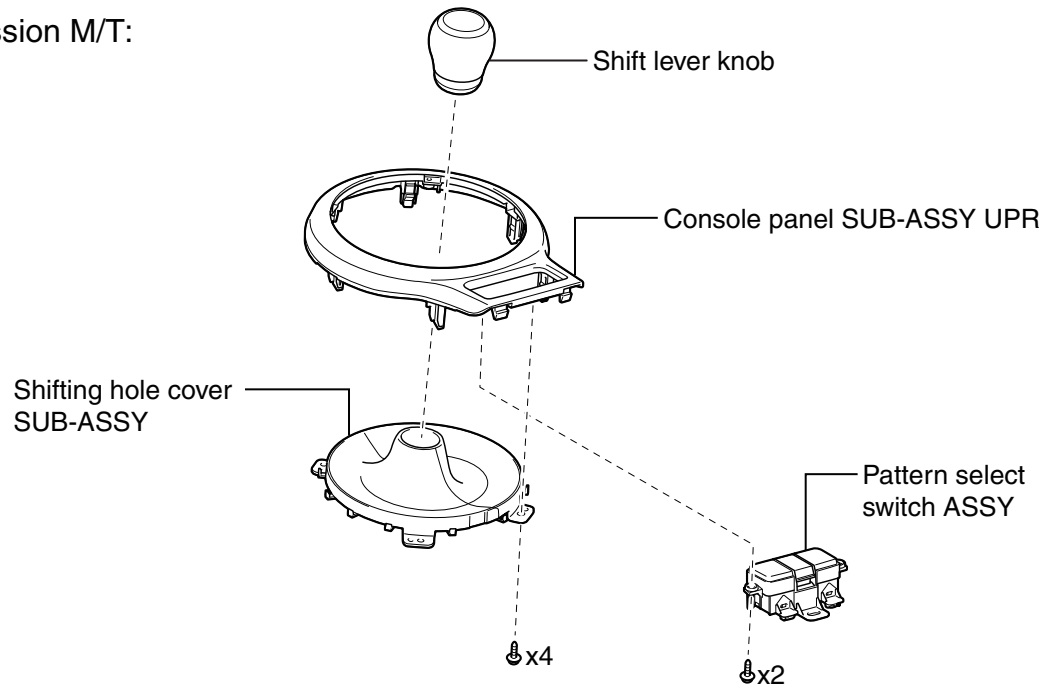

EI-03849

IT

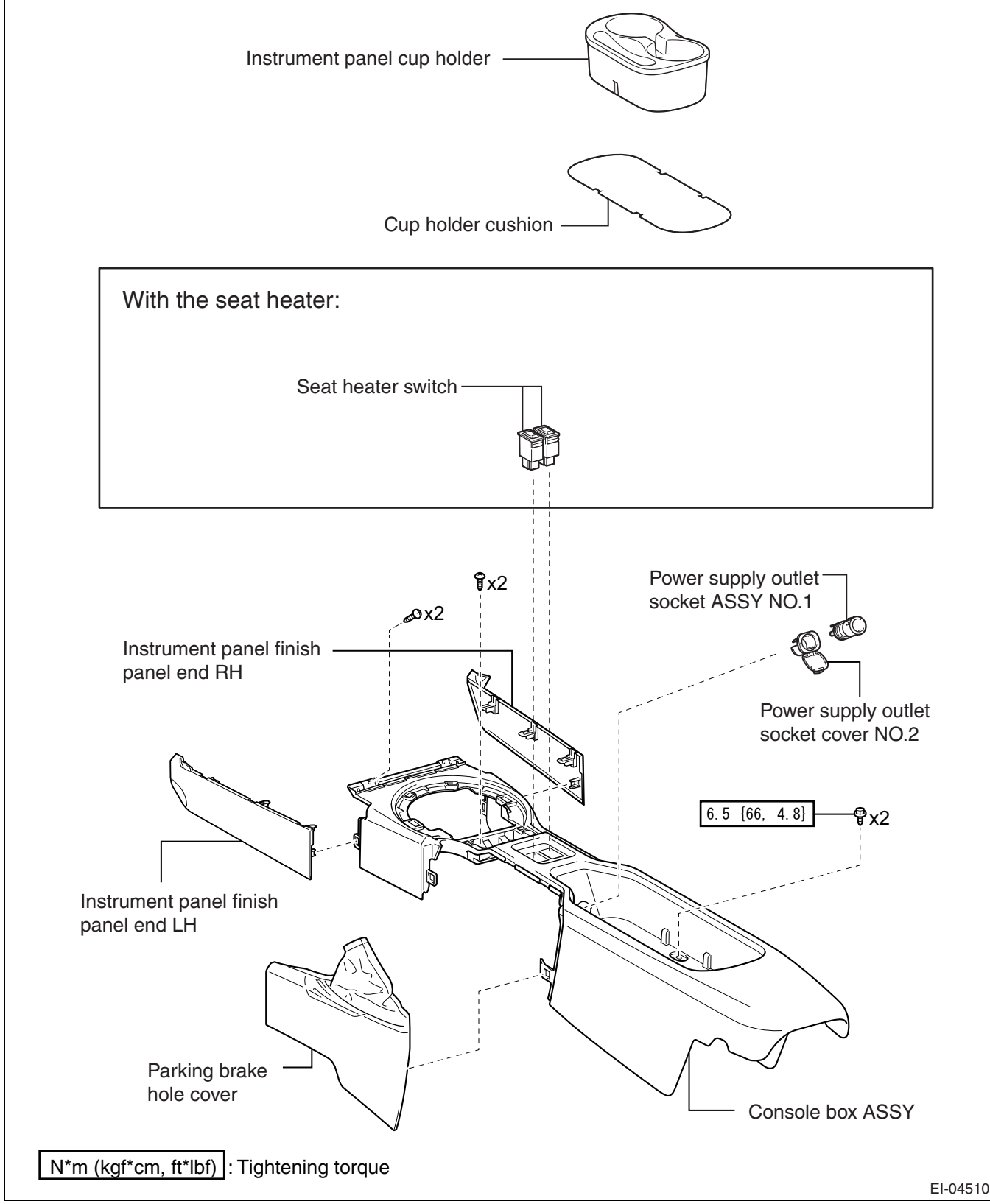

Removal

1. Removal of console box cover FR (with smart key system)
   (1) Check that the shift lever is in N position.

IT

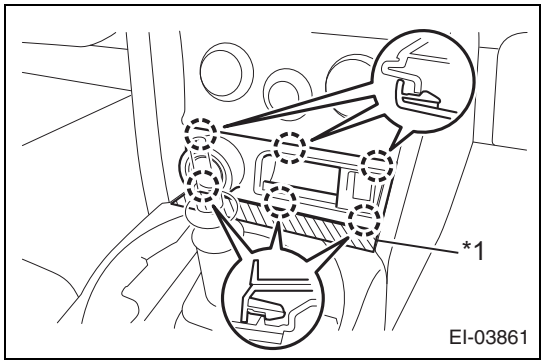

(2) Apply protective tape to the location shown in the figure.

Captions in illustration

*1	Protective tape

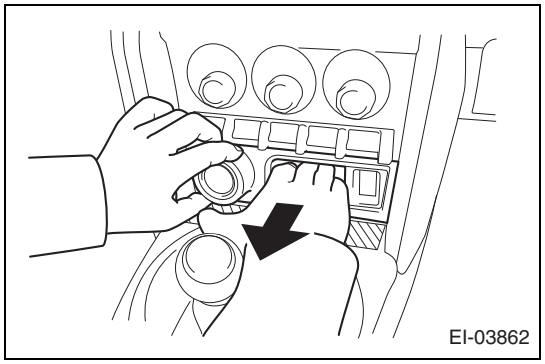

(3) Release the 6 claws and remove the console box cover FR.

NOTE:

While holding the inside of the pocket and the engine ignition switch, pull out the console box cover FR.

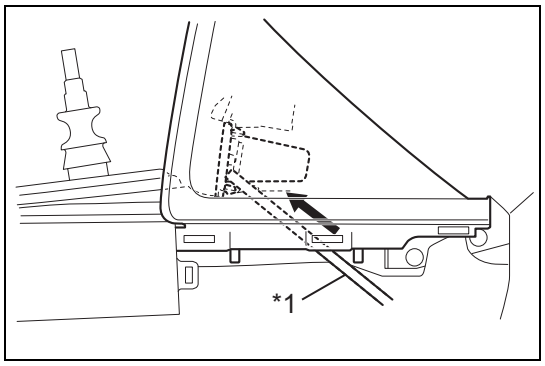

NOTE:

Remove the passenger's side instrument panel finish panel end and remove the console box cover FR, pushing the back of the cover with a stick (tool handle, etc.).

Captions in illustration

*1	Stick

CAUTION:

Do not push switches or antennas with a stick (tool handle, etc.).

2. Removal of push button start switch (with smart key system) (Refer to ST - 43)
3. Removal of electrical key antenna (with smart key system) (Refer to TD - 333)
4. Removal of console box cover FR (without smart key system)
   (1) Check that the shift lever is in N position.

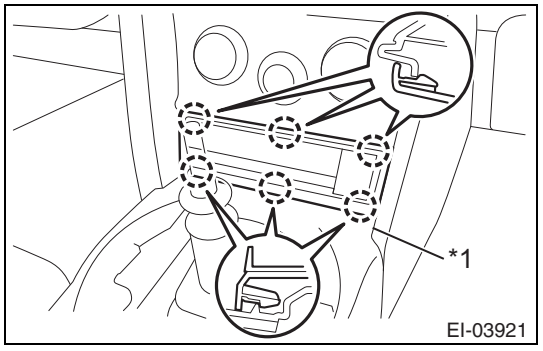

(2) Apply protective tape to the location shown in the figure.

Captions in illustration

*1	Protective tape

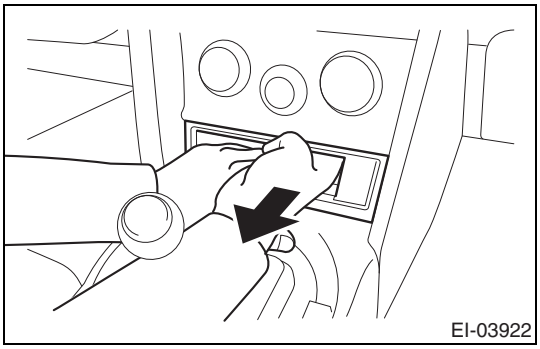

(3) Release the 6 claws and remove the console box cover FR.
NOTE:
- While holding the inside of the pocket, pull out the console box cover FR.
- If it is difficult to remove the cover, refer to the procedure with smart key system.

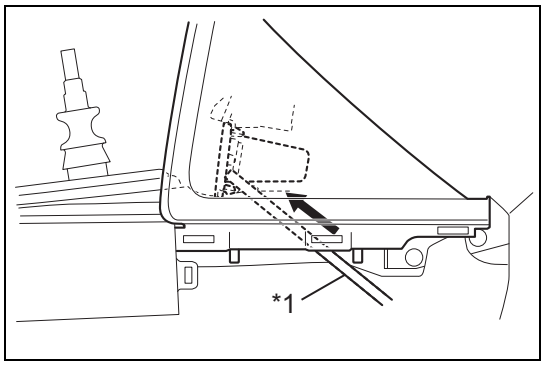

NOTE:
Remove the passenger's side instrument panel finish panel end and remove the console box cover FR, pushing the back of the cover with a stick (tool handle, etc.).

Captions in illustration

*1	Stick

CAUTION:
Do not push switches or antennas with a stick (tool handle, etc.).

5. Removal of shift lever knob (transmission A/T)
(1) Turn the shift lever knob in the direction of the arrow in the figure and remove it.

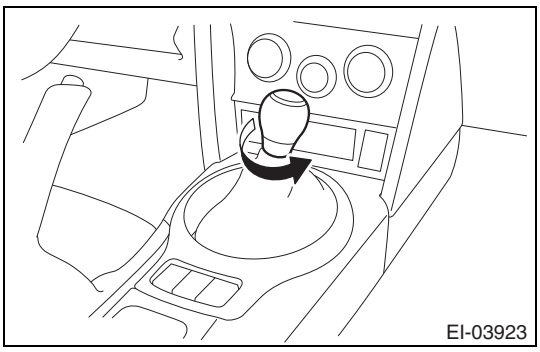

6. Removal of console panel SUB-ASSY UPR (transmission A/T)
(1) Release the 2 clips and 4 claws.
(2) Disconnect the connectors and remove the console panel SUB-ASSY UPR.

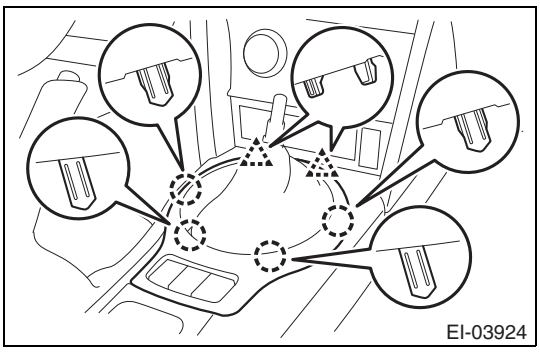

7. Removal of shift position indicator (transmission A/T)
(1) Remove the 2 screws, release the clamp, and remove the shift position indicator.

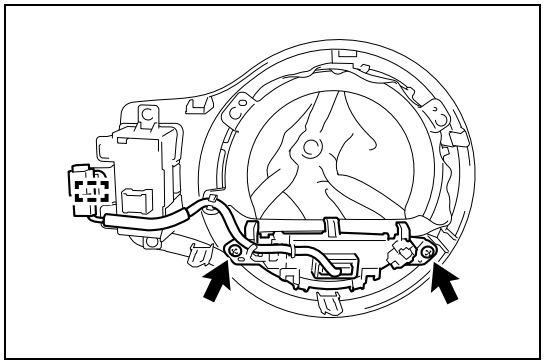

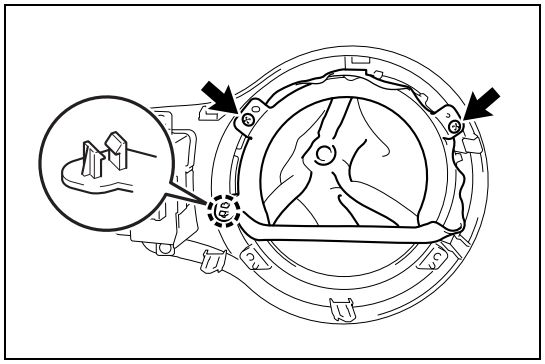

8. Removal of shifting hole cover SUB-ASSY (transmission A/T)
   (1) Remove the 2 screws, release the claw, and remove the shifting hole cover SUB-ASSY.

9. Removal of pattern select switch ASSY (transmission A/T) (Refer to BC - 110)

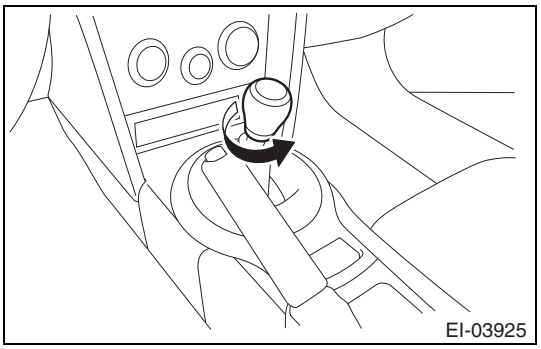

10. Removal of shift lever knob (transmission M/T)
    (1) Turn the shift lever knob in the direction of the arrow in the figure and remove it.

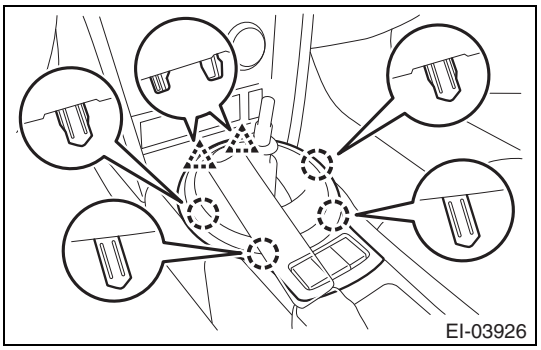

11. Removal of console panel SUB-ASSY UPR (transmission M/T)
    (1) Release the 2 clips and 4 claws.
    (2) Disconnect the connectors and remove the console panel SUB-ASSY UPR.

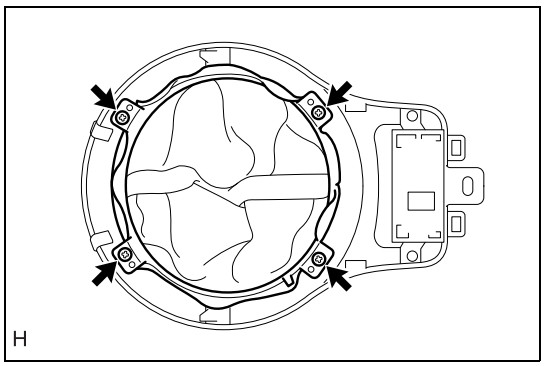

12. Removal of shifting hole cover SUB-ASSY (transmission M/T)
    (1) Remove the 4 screws and remove the shifting hole cover SUB-ASSY.

13. Removal of pattern select switch ASSY (transmission M/T) (Refer to BC - 110)

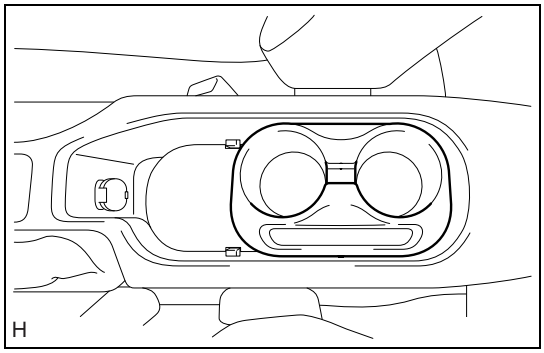

14. Removal of instrument panel cup holder
    (1) Remove the instrument panel cup holder.

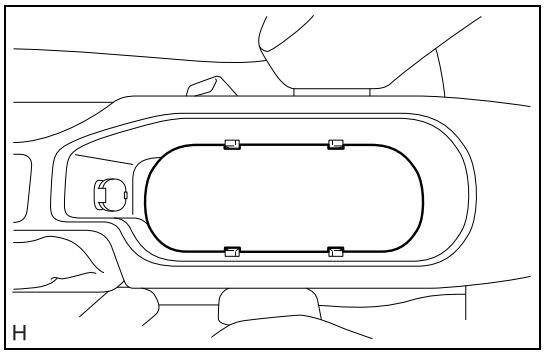

15. Removal of cup holder cushion
    (1) Remove the cup holder cushion.

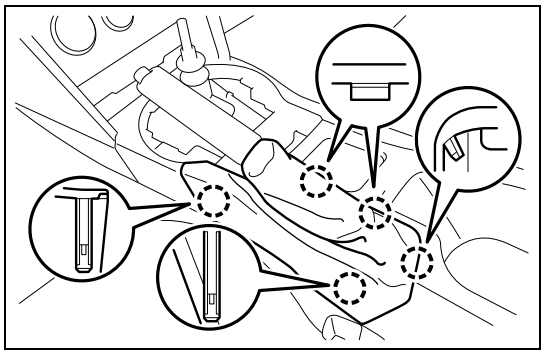

16. Removal of parking brake hole cover
    (1) Release the 5 claws and remove the parking brake hole cover.
    CAUTION:
    If the cover is pulled toward you, the claws may be damaged. Be sure to pull the cover upward and remove it.

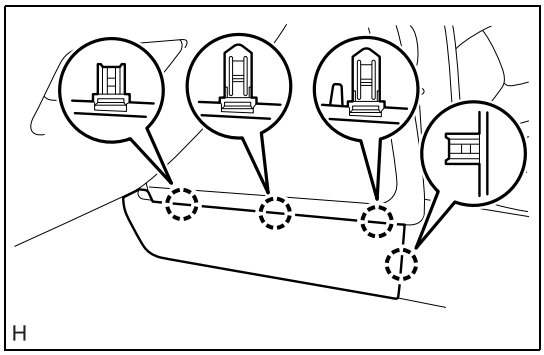

17. Removal of instrument panel finish panel end RH
    (1) Release the 4 claws and remove the instrument panel finish panel end RH.

18. Removal of instrument panel finish panel end LH
    NOTE:
    Remove the part in the same manner as RH side.

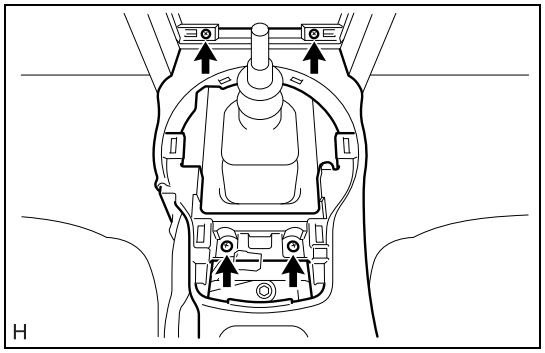

19. Removal of console box ASSY
    (1) Remove the 4 screws.

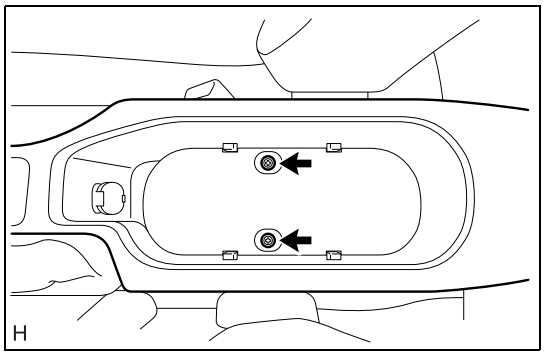

    (2) Remove the 2 bolts.
    (3) Disconnect the connectors and remove the console box ASSY.
    WARNING:
    The satellite safing sensor of the airbag system is installed under the rear side of the console box ASSY. Before removing the console box ASSY, always be sure to confirm the precautions related to the SRS airbag system. (Refer to RS - 5)

Disassembly

1. Removal of power supply outlet socket ASSY NO.1 (Refer to PI - 4)
2. Removal of power supply outlet socket cover NO.2 (Refer to PI - 5)
3. Removal of seat heater switch (with seat heater) (Refer to SE - 40)

Assembly

1. Installation of seat heater switch (with seat heater) (Refer to SE - 41)
2. Installation of power supply outlet socket cover NO.2 (Refer to PI - 5)
3. Installation of power supply outlet socket ASSY NO.1 (Refer to PI - 5)

IT

Installation

1. Installation of console box ASSY
    (1) Connect each connector.
    (2) With the 4 screws and 2 bolts, install the console box ASSY.
    Standard value:Bolt
    T=6.5N·m {66kgf·cm} {4.8ft·lbf}
2. Installation of instrument panel finish panel end RH
    (1) Engage the 4 claws and install the instrument panel finish panel end RH.
3. Installation of instrument panel finish panel end LH
    NOTE:
    Install the part in the same manner as RH side.
4. Installation of parking brake hole cover
    (1) Engage the 5 claws and install the parking brake hole cover.
5. Installation of cup holder cushion
    (1) Install the cup holder cushion.
6. Installation of instrument panel cup holder
    (1) Install the instrument panel cup holder.
7. Installation of pattern select switch ASSY (transmission M/T) (Refer to BC - 111)
8. Installation of shifting hole cover SUB-ASSY (transmission M/T)
    (1) With the 4 screws, install the shifting hole cover SUB-ASSY.

9. Installation of console panel SUB-ASSY UPR (transmission M/T)
   (1) Connect each connector.
   (2) Engage the 2 clips and 4 claws and install the console panel SUB-ASSY UPR.

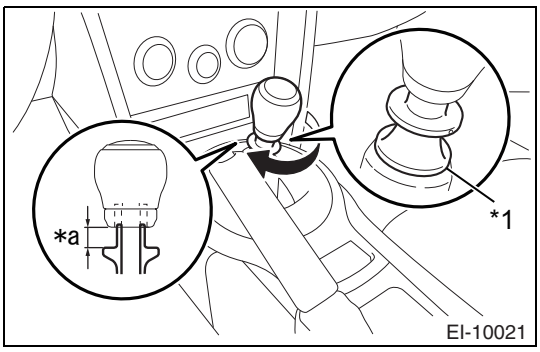

10. Installation of shift lever knob (transmission M/T)
    (1) Turn the shift lever knob in the direction of the arrow in the figure and install it.

Captions in illustration

*1	Pull collar
*a	Installation position

CAUTION:
- Install it avoiding the gap between the shift knob and the pull collar becomes 11 mm or less.
- Fasten the shift lever knob securely.
- When pulling the pull collar, check that the gear is shifted into reverse.

11. Installation of pattern select switch ASSY (transmission A/T) (Refer to BC - 111)
12. Installation of shifting hole cover SUB-ASSY (transmission A/T)
    (1) Install the 2 screws, engage the claw, and install the shifting hole cover SUB-ASSY.
13. Installation of shift position indicator (transmission A/T)
    (1) Install the 2 screws, engage the clamp, and install the shift position indicator.
14. Installation of console panel SUB-ASSY UPR (transmission A/T)
    (1) Connect each connector.
    (2) Engage the 2 clips and 4 claws and install the console panel SUB-ASSY UPR.

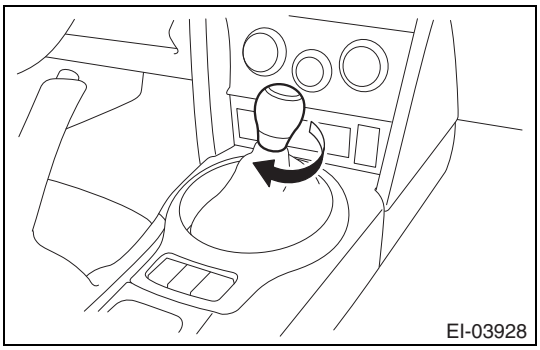

15. Installation of shift lever knob (transmission A/T)
    (1) Turn the shift lever knob in the direction of the arrow in the figure and install it.
    CAUTION:
    - Fasten the shift lever knob securely.
    - Orient the groove of the shift lever knob to the rear of the vehicle.

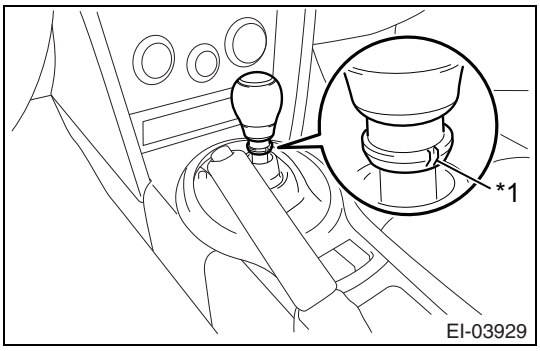

Captions in illustration

*1	Groove

16. Installation of console box cover FR (without smart key system)
    (1) Engage the 6 claws and install the console box cover FR.
    CAUTION:
    When inserting the console box cover FR, be careful that the clear waterproof cover attached to the airbag control module is not peeled off.
17. Installation of electrical key antenna (with smart key system) (Refer to TD - 333)
18. Installation of push button start switch (with smart key system) (Refer to ST - 43)
19. Installation of console box cover FR (with smart key system)
    (1) Connect each connector.
    (2) Engage the 6 claws and install the console box cover FR.

CAUTION:
When inserting the console box cover FR, be careful that the clear waterproof cover attached to the airbag control module is not peeled off.

Roof head lining

Exploded view

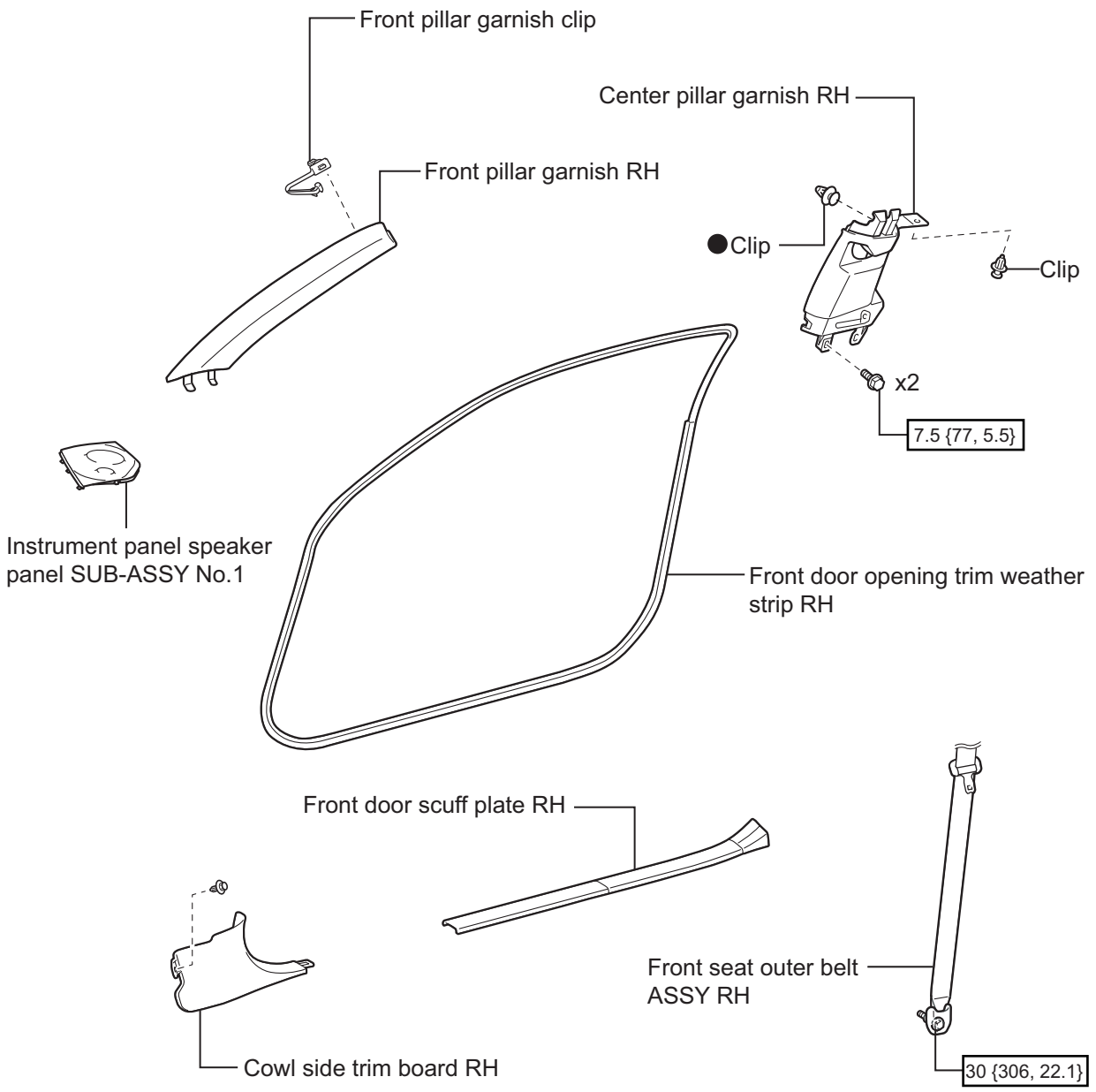

N*m {kgf*cm, ft*lbf} : Tightening torque

● Non-reusable part

EI-10418

IT

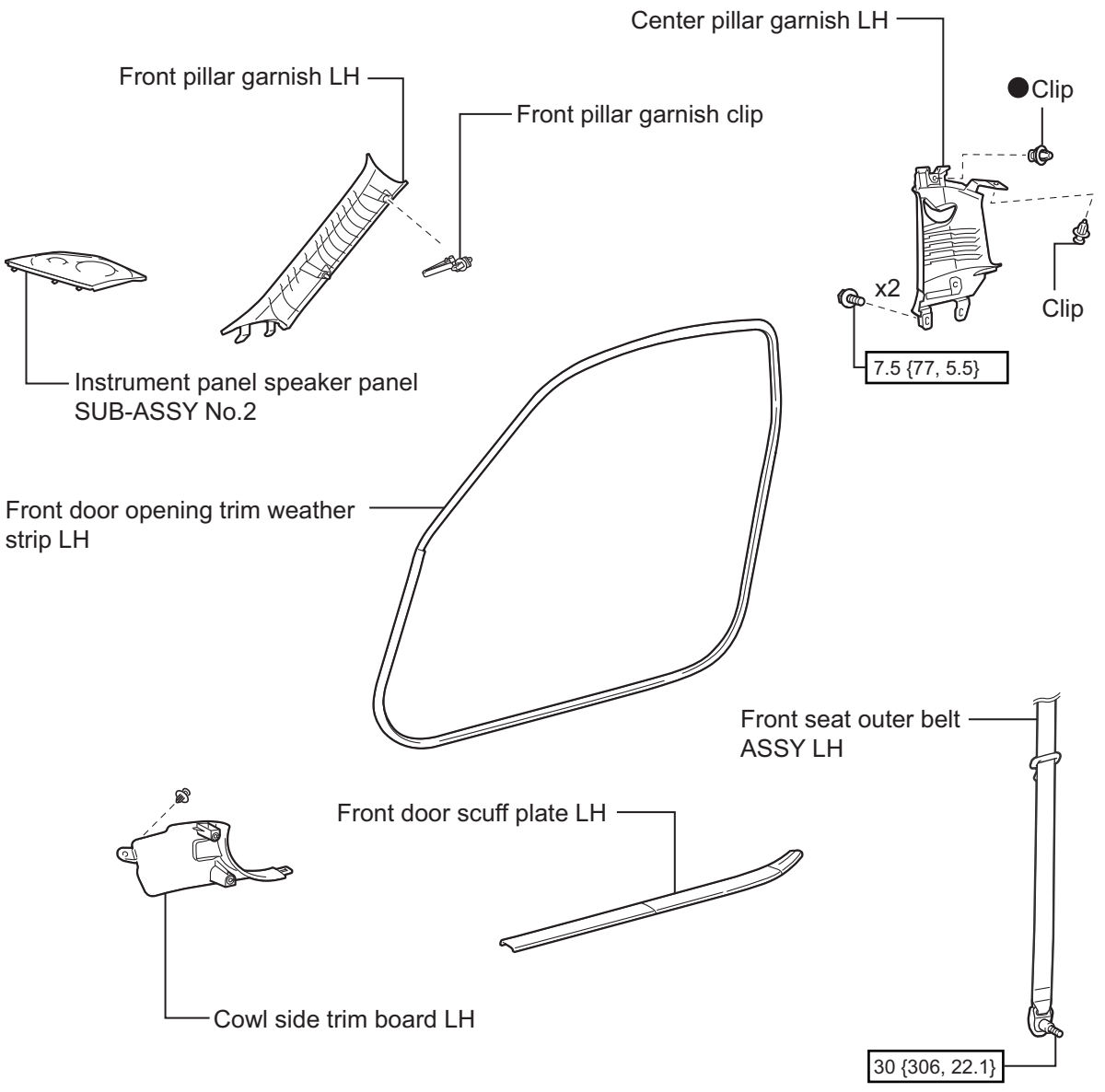

N*m {kgf*cm, ft*lbf} : Tightening torque

● Non-reusable part

EI-10419

IT

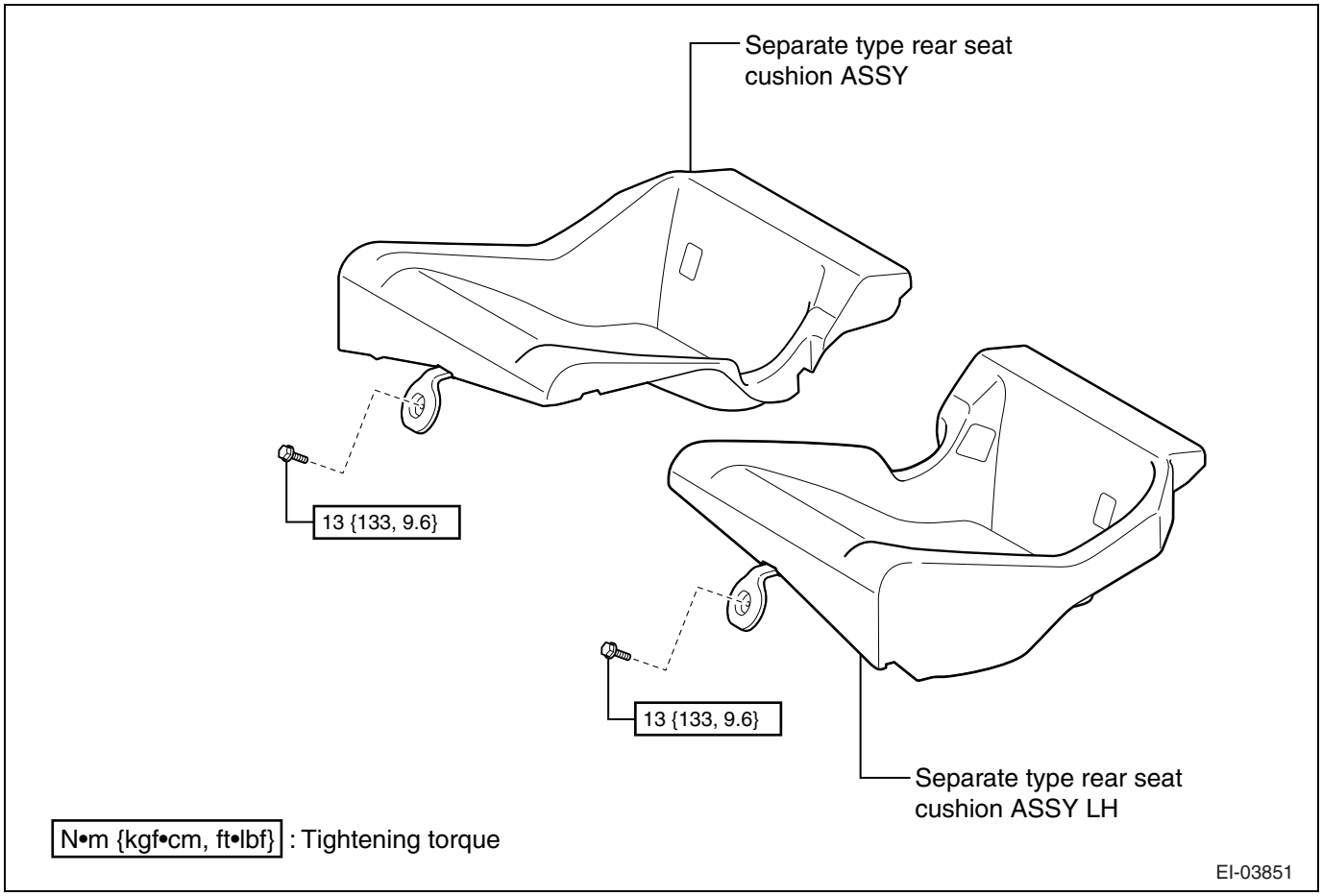
Separate type rear seat cushion ASSY
13 {133, 9.6}
13 {133, 9.6}
Separate type rear seat cushion ASSY LH
N•m {kgf•cm, ft•lbf} : Tightening torque
EI-03851

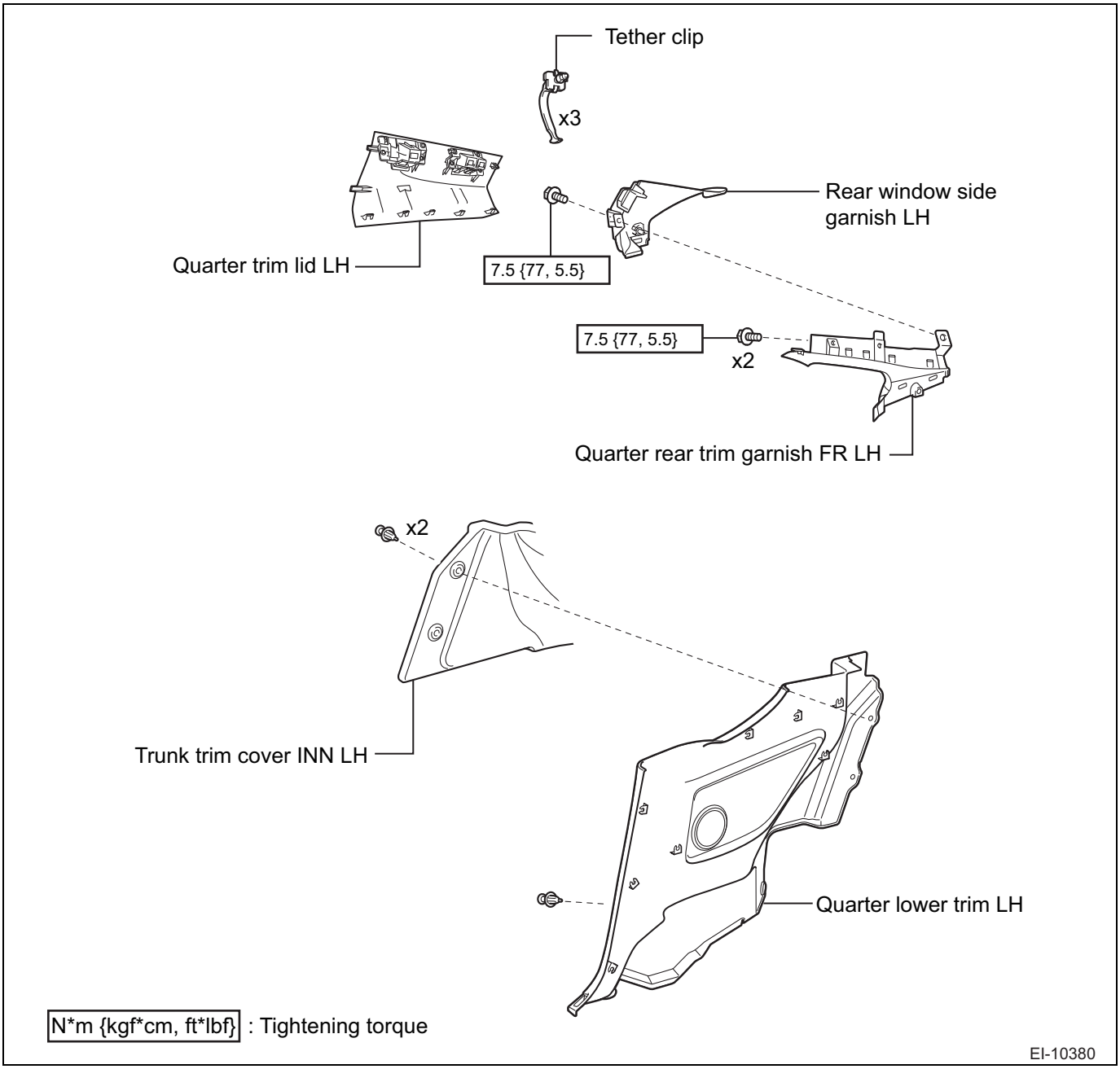

N*m {kgf*cm, ft*lbf} : Tightening torque

EI-10380

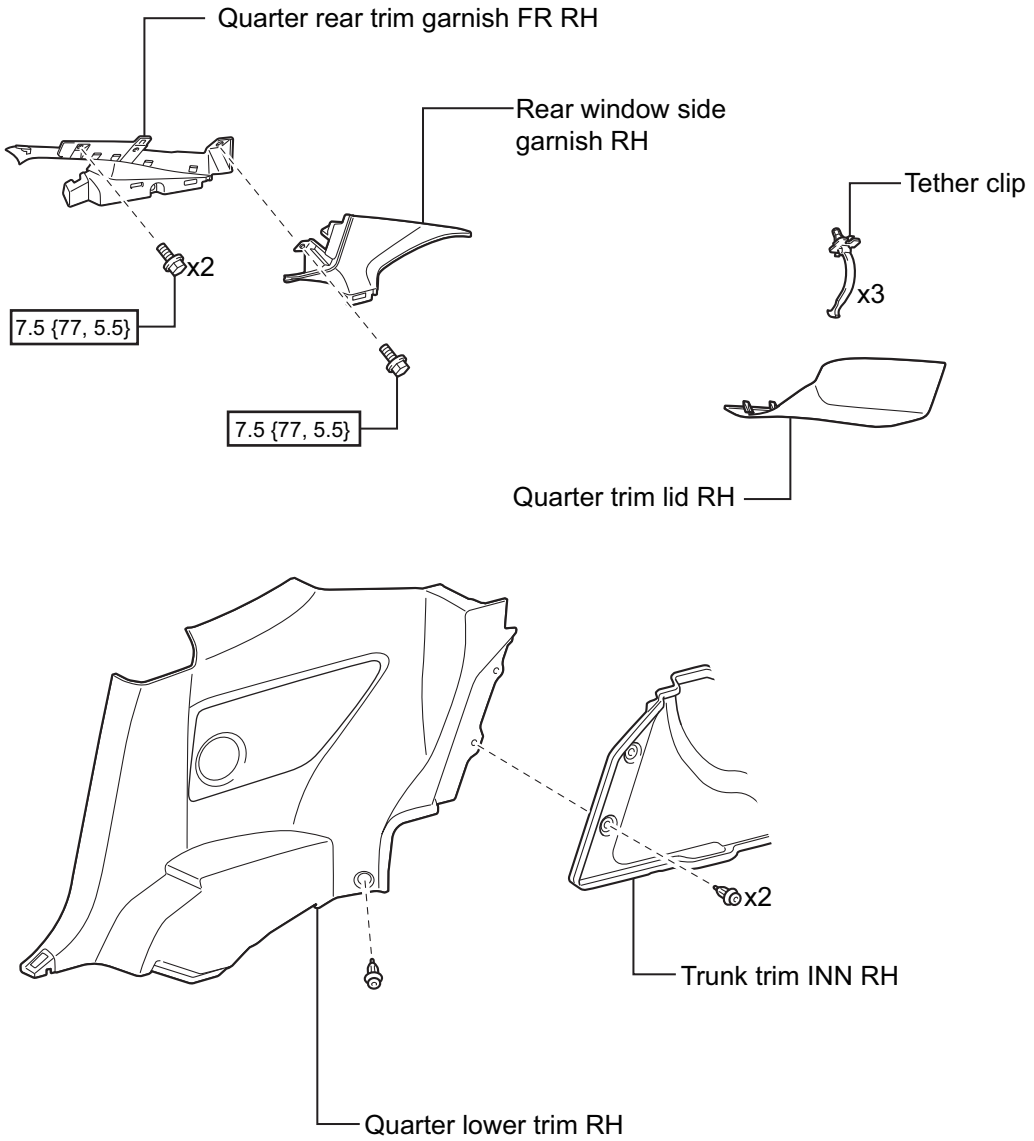

N*m {kgf*cm, ft*lbf} : Tightening torque

EI-10381

IT

With vanity light :

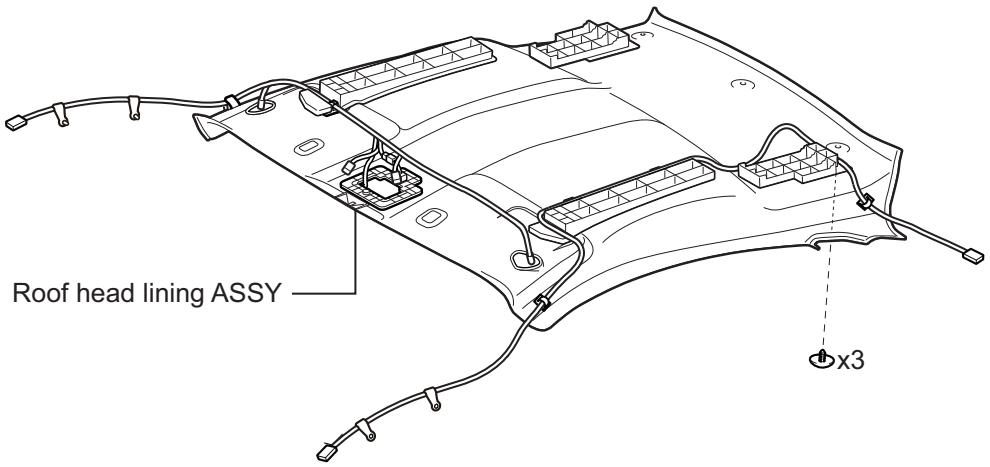

Without vanity light :

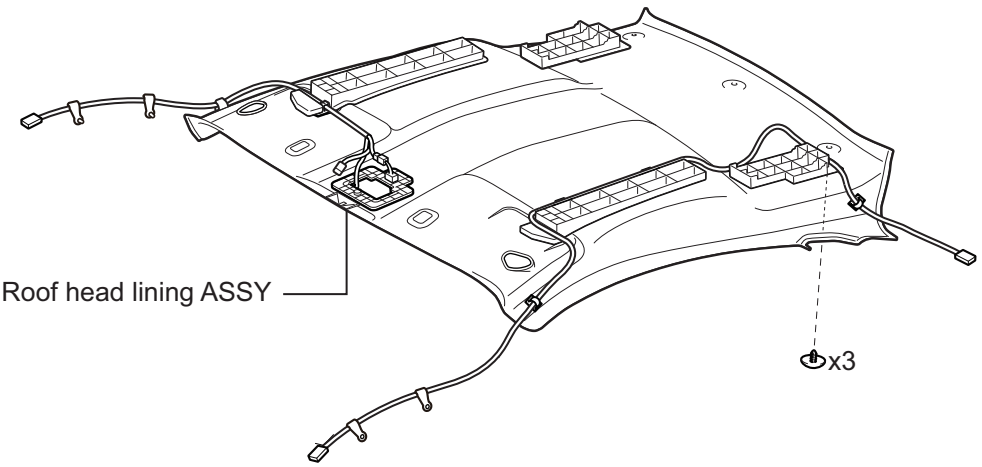

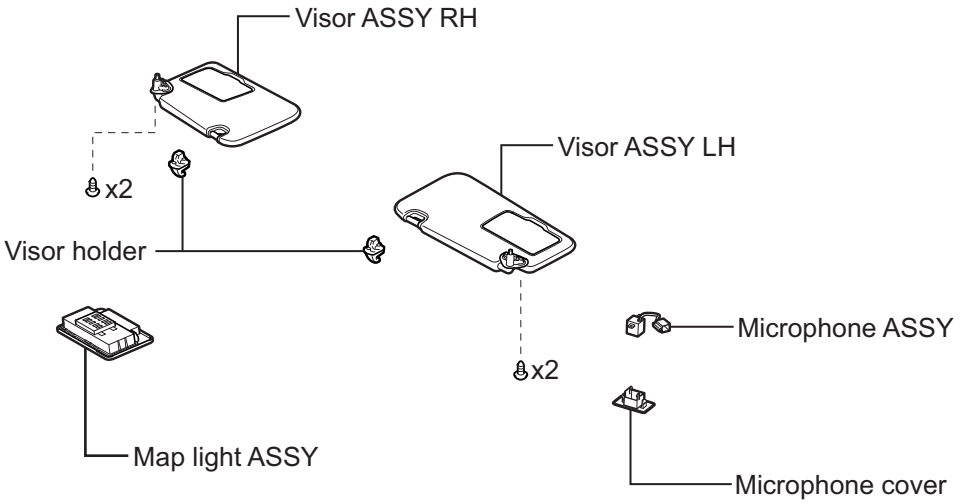

EI-11138

With vanity light :

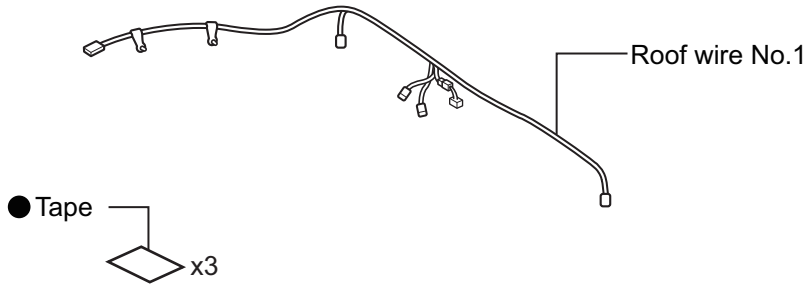

Without vanity light :

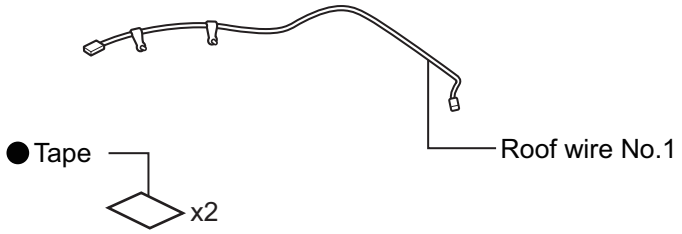

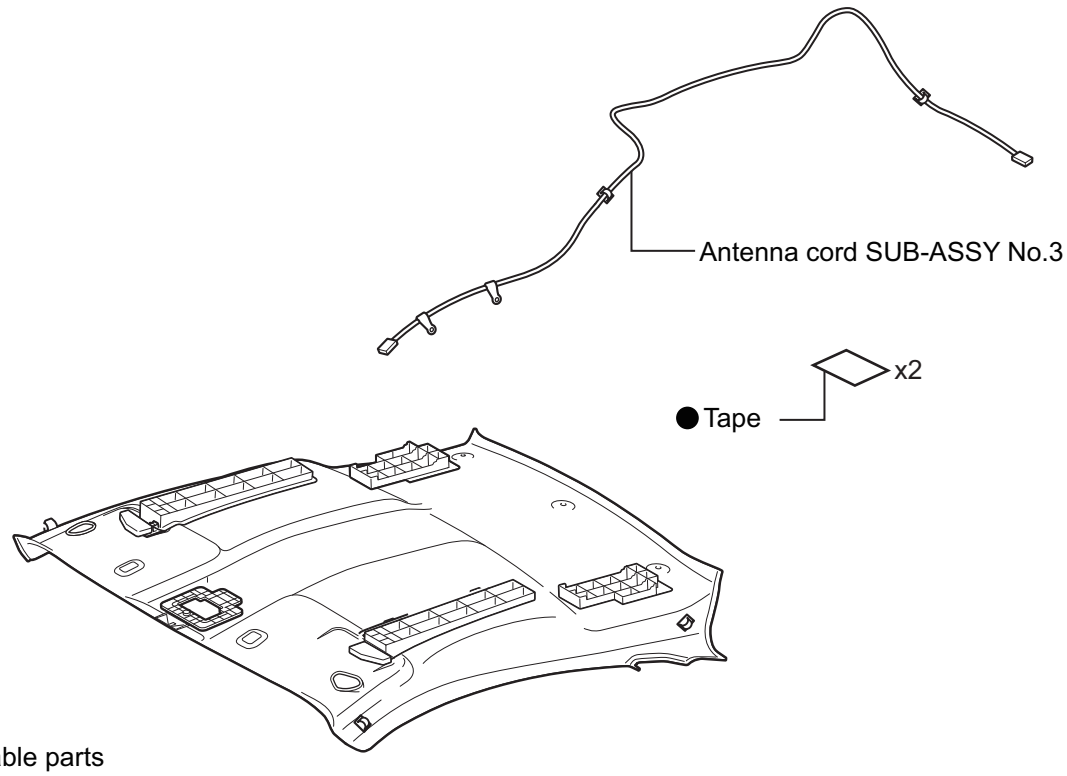

● Non-reusable parts

EI-11139

IT

Removal

1. Precautions

   CAUTION:

   After turning the ignition switch to OFF, you may have to wait for a while before disconnecting the battery terminals. Check appropriate precautions for battery terminal disconnection before proceeding. (Refer to IN - 6)

2. Disconnection of the battery ground terminal (Refer to BH - 31)
3. Removal of instrument panel speaker panel SUB-ASSY NO.1 (Refer to IT - 6)
4. Removal of instrument panel speaker panel SUB-ASSY NO.2 (Refer to IT - 7)
5. Removal of front pillar garnish LH (Refer to IT - 7)
6. Removal of front pillar garnish RH
   NOTE:
   Remove the part in the same manner as LH side.

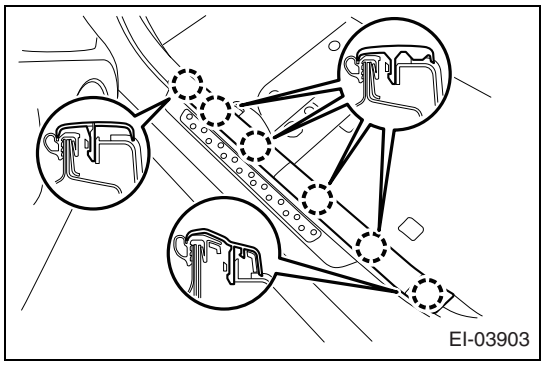

7. Removal of front door scuff plate LH
   (1) Release the 6 claws and remove the front door scuff plate LH.
8. Removal of front door scuff plate RH
   NOTE:
   Remove the part in the same manner as LH side.

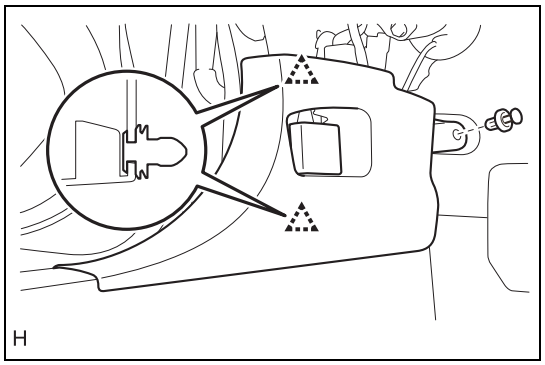

9. Removal of cowl side trim board LH
   (1) Remove the clip.
   (2) Release the 2 clips and remove the cowl side trim board LH.
10. Removal of cowl side trim board RH
    NOTE:
    Remove the part in the same manner as LH side.

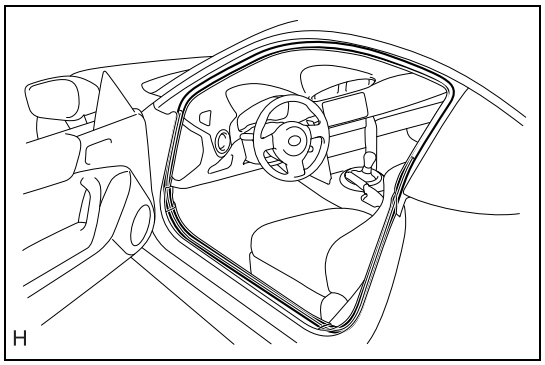

11. Removal of front door opening trim weather strip LH
    (1) Remove the front door opening trim weather strip LH.
12. Removal of the front door opening trim weather strip RH
    NOTE:
    Remove the part in the same manner as LH side.
13. Disconnection of front seat outer belt ASSY LH (Refer to SB - 26)
14. Disconnection of front seat outer belt ASSY RH
    NOTE:
    Remove the part in the same manner as RH side.
15. Removal of separate type rear seat cushion ASSY (Refer to SE - 31)

IT

16. Removal of separate type rear seat cushion ASSY LH (Refer to SE - 31)

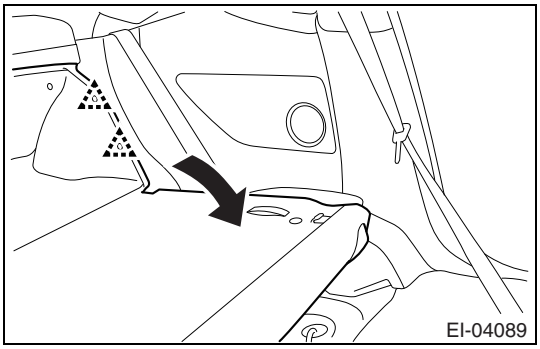

17. Disconnection of trunk trim cover INN LH
    (1) Tilt the rear seat backrest ASSY forward.
    (2) Release the 2 clips and disconnect the trunk trim cover INN LH.

18. Disconnection of trunk trim cover INN RH
    NOTE:
    Repeat the same disconnection steps for the LH side.

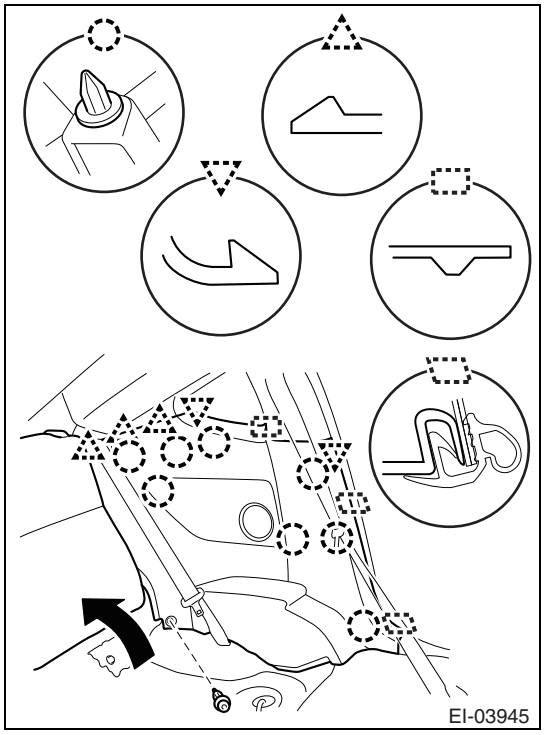

19. Removal of quarter lower trim LH
    (1) Pull up the rear seat backrest ASSY.
    (2) Remove the clip.
    (3) Release the 8 clips and 8 claws, and remove the quarter lower trim LH.
    WARNING:
    The curtain airbag sensor of the airbag system is installed behind the quarter lower trim. Before removing the quarter lower trim, always be sure to confirm the precautions related to the SRS airbag system. (Refer to RS - 5)

20. Removal of quarter lower trim RH
    NOTE:
    Remove the part in the same manner as LH side.

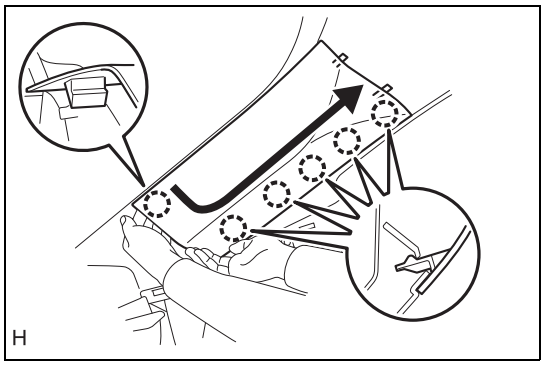

21. Removal of quarter trim lid LH
    (1) According to the direction of the arrow in the figure, release the 6 claws.

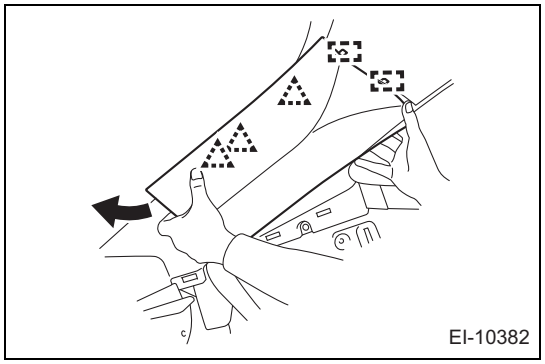

(2) Release the 3 clips and 2 guides.
NOTE:
Hook the tether clips onto the quarter trim lid LH.

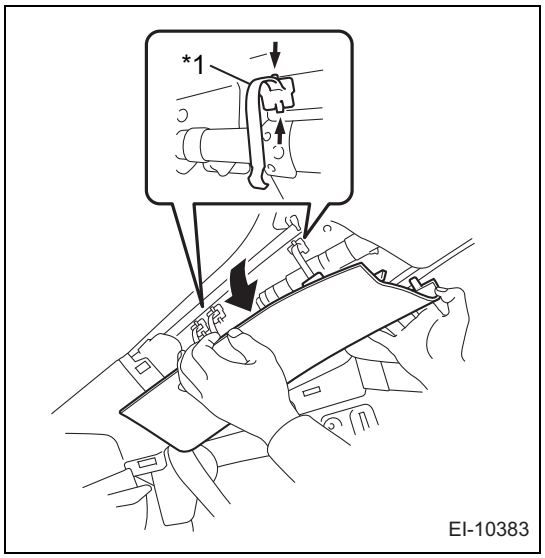

(3) As shown in the figure, push and remove the 3 tether clips in the direction of the arrow and remove the quarter trim lid LH and the 3 tether clips as a unit.

Captions in illustration

*1	Tether clip

(4) Remove the 3 tether clips from the quarter trim lid LH.
CAUTION:
If it is damaged, be sure to replace the tether clip with a new one.

22. Removal of quarter trim lid RH
NOTE:
Remove the part in the same manner as LH side.

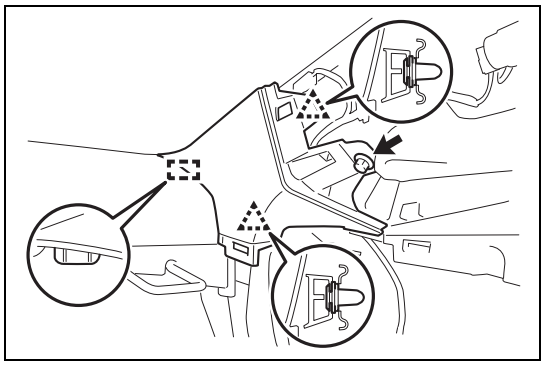

23. Removal of the rear window side garnish LH
(1) Remove the bolt.
(2) Release the 2 clips, remove the guide, and remove the rear window side garnish LH.

IT

24. Removal of rear window side garnish RH
NOTE:
Remove the part in the same manner as LH side.

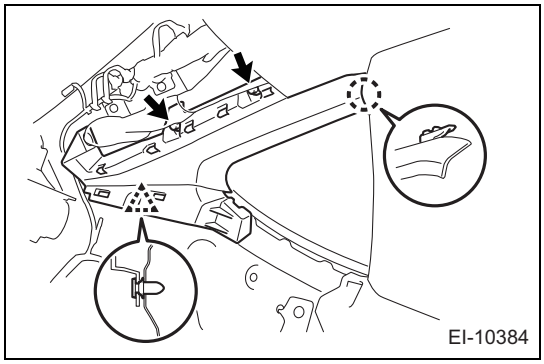

25. Removal of quarter rear trim garnish FR LH
    (1) Remove the 2 bolts.
    (2) Release the clip and claw, and remove the quarter rear trim garnish FR LH.

26. Removal of quarter rear trim garnish FR RH
    NOTE:
    Remove the part in the same manner as LH side.

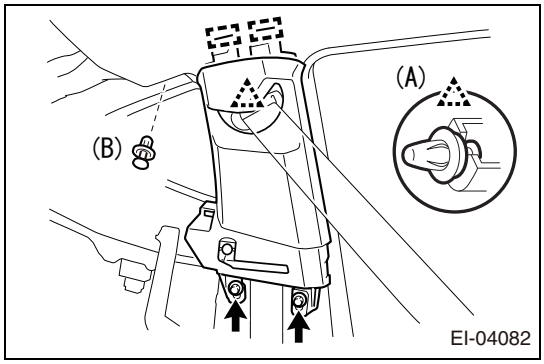

27. Removal of center pillar garnish LH
    (1) Remove the clip (B) and the 2 bolts.
    (2) Release the clip (A) and 2 guides and remove the center pillar garnish LH.
    CAUTION:
    Do not reuse the upper clip (A) of the center pillar garnish RH.
    Once it is removed, the clip looses its affixing capability. Be sure to replace it with a new clip.

28. Removal of center pillar garnish RH
    NOTE:
    Remove the part in the same manner as LH side.

29. Removal of map light ASSY (Refer to LI - 48)

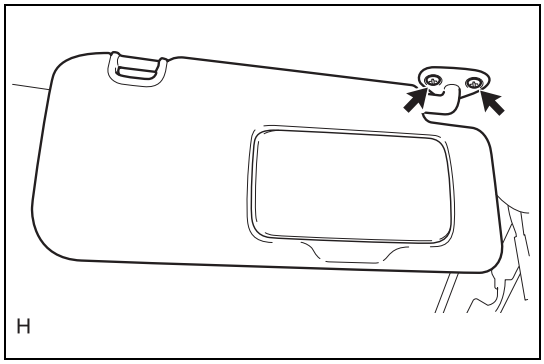

30. Removal of visor ASSY RH
    (1) Remove the 2 screws.

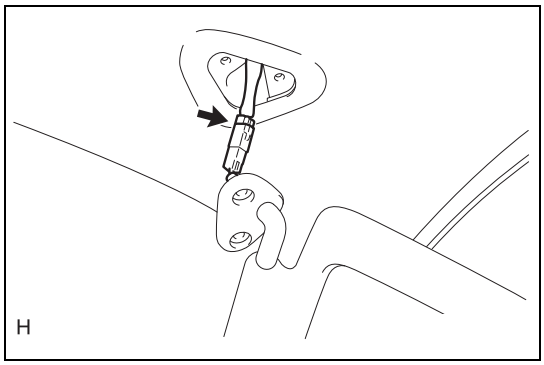

    (2) Disconnect the connector and remove the visor ASSY RH (with vanity light).

31. Removal of visor ASSY LH
    NOTE:
    Remove the part in the same manner as RH side.

IT

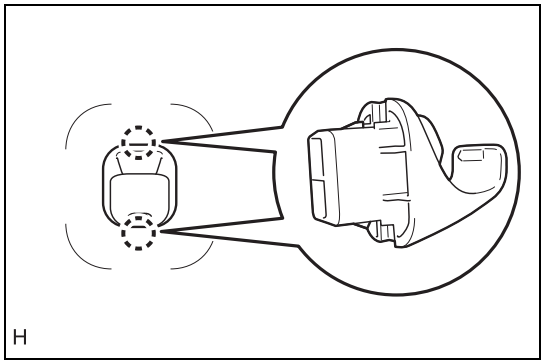

32. Removal of visor holder
    (1) Release the 2 claws and remove the 2 visor holders.

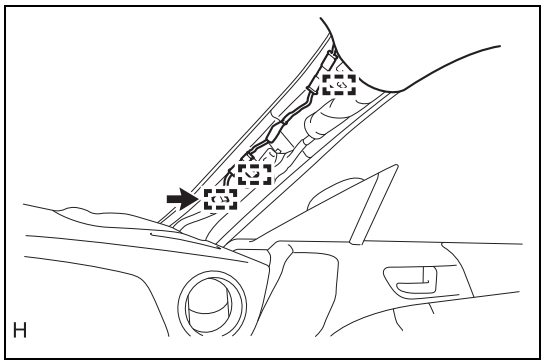

33. Removal of roof head lining ASSY (with vanity light)
    (1) Disconnect the connector of the front pillar RH and the 3 clamps.

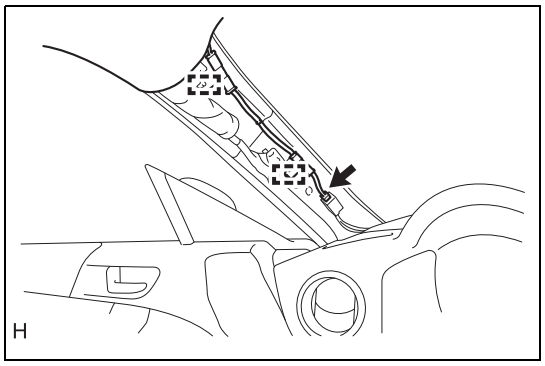

    (2) Disconnect the connector and 2 clamps at the front pillar LH.

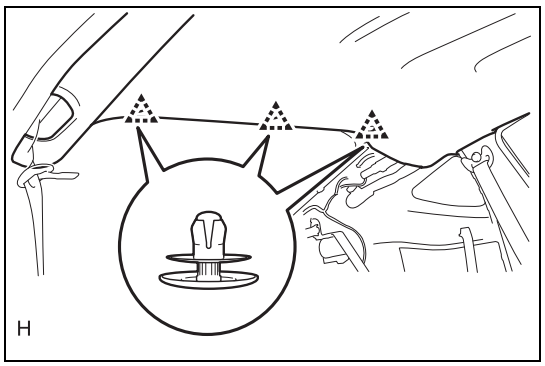

    (3) Remove the 3 clips from the rear of the vehicle.

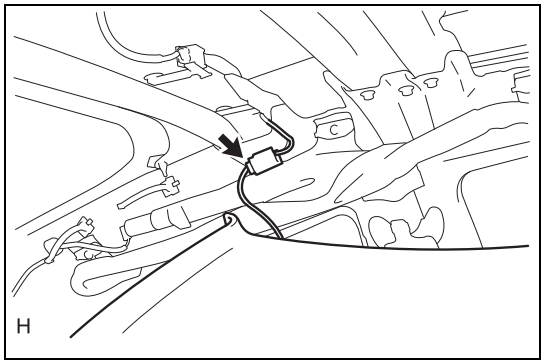

(4) Disconnect the connector of the feeder cord ASSY.

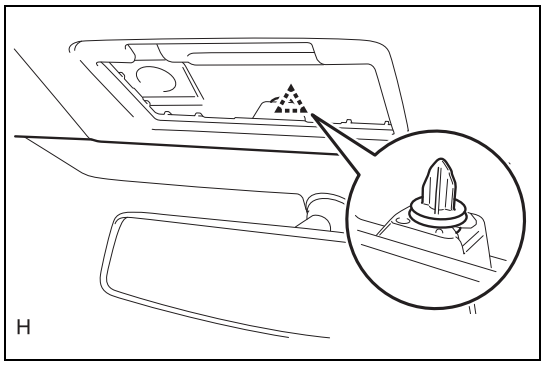

(5) Release the clip at the front of the vehicle and remove the roof head lining ASSY.

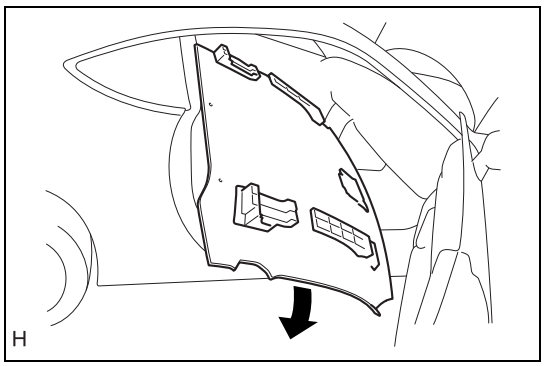

(6) Take out the removed roof head lining ASSY through the passenger's door so that the ASSY does not interfere with the body interior.

CAUTION:

- To prevent distortion of the roof head lining ASSY, take out the ASSY with at least two persons.
- Do not allow the roof head lining to be stuck, resulting in bent or damaged lining.
- Do not damage the roof head lining ASSY and body interior.

34. Removal of roof head lining ASSY (without vanity light)

NOTE:

Repeat the same removal steps for that with vanity light.

Disassembly

1. Removal of roof wire NO.1 (with vanity light)
   (1) Remove the fixing tapes.
   (2) Release the 2 guides and remove roof wire NO.1 from the roof head lining ASSY.

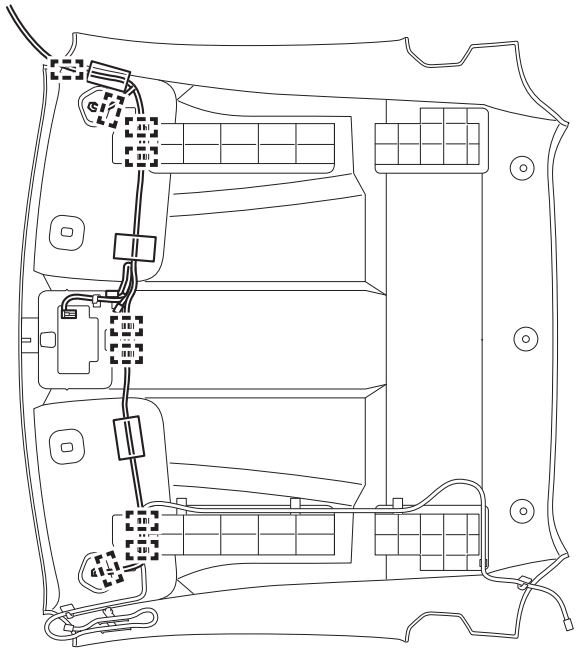

EI-11140

Captions in illustration

▭	Fixing tape	-	-

2. Removal of roof wire NO.1 (without vanity light)
   (1) Remove the fixing tapes.
   (2) Release the 2 guides and remove roof wire NO.1 from the roof head lining ASSY.

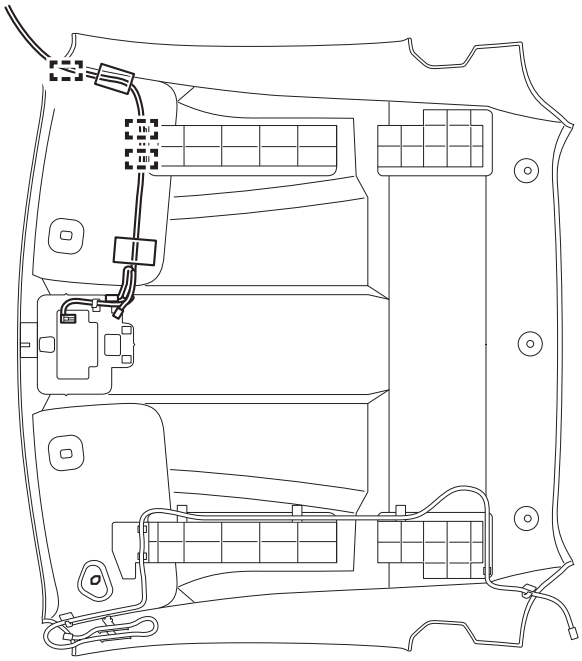

EI-11141

Captions in illustration

▭	Fixing tape	-	-

3. Removal of antenna cord SUB-ASSY NO.3 (Refer to AV - 32)

Assembly

1. Installation of antenna cord SUB-ASSY NO.3 (Refer to AV - 33)
2. Installation of roof wire NO.1
   (1) Position roof wire NO.1 as shown in the figure and install the 2 guides.

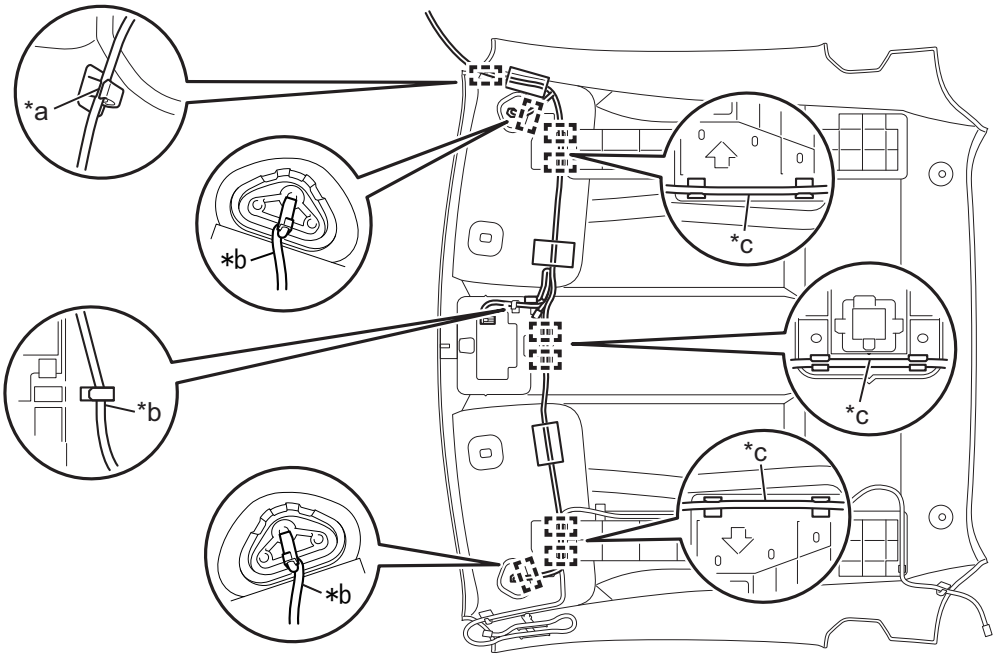

EI-11142

CAUTION:
Do not allow roof wire NO.1 to be floated or twisted.

Captions in illustration

*a	Align the center of the white tape with the trim end to secure it.	*b	Align the end of the white tape with the installation opening of the sun visor.
*c	Align the white tape with the clip to secure it.	-	-
▭	Fixing tape (86359SC000/TAPE)	-	-

   (2) Attach the fixing tape and install roof wire NO.1.
   NOTE:
   Cut the fixing tape into the necessary size (Recommended: 50 mm ×80 mm, 2.0 in ×3.2 in) for use.
3. Installation of roof wire NO.1 (without vanity light)
   (1) Position roof wire NO.1 as shown in the figure and install the 2 guides.

IT

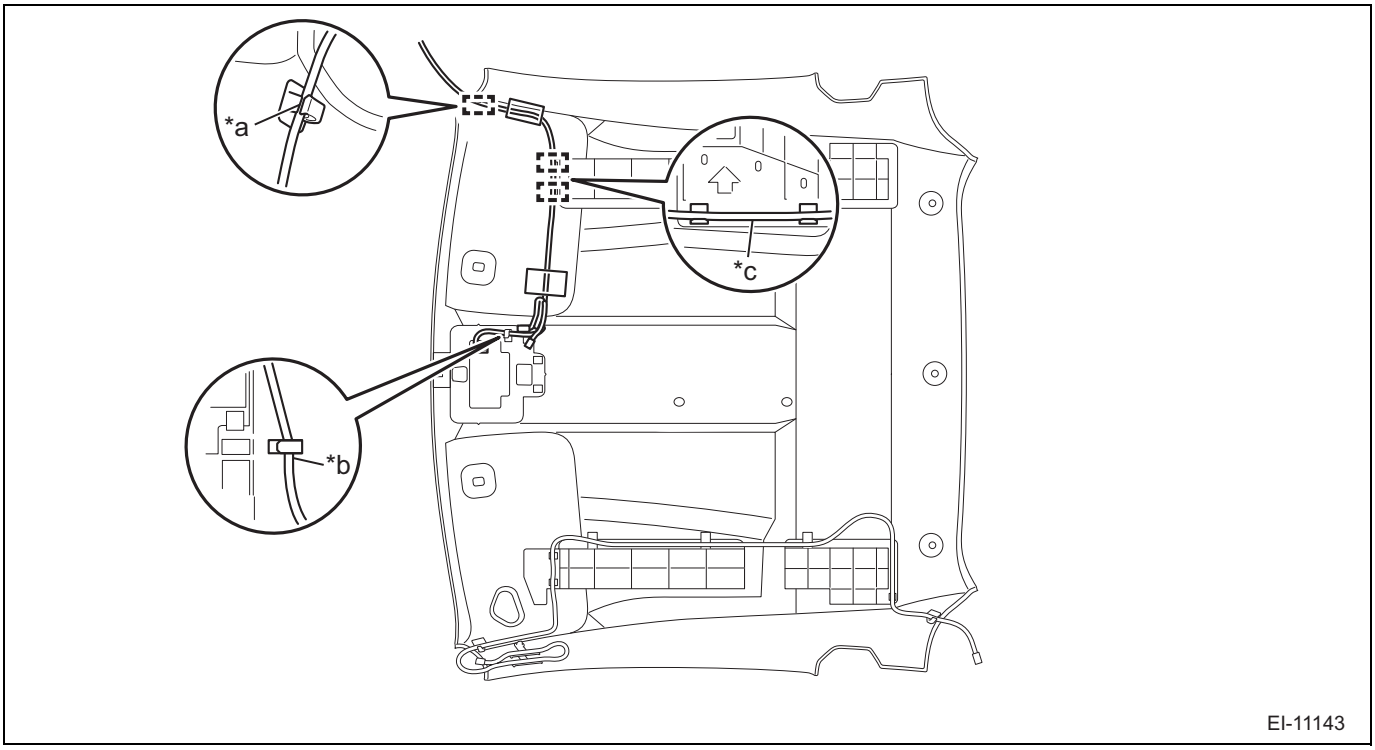

CAUTION:
Do not allow roof wire NO.1 to be floated or twisted.

Captions in illustration

*a	Align the center of the white tape with the trim end to secure it.	*b	Align the end of the white tape with the installation opening of the sun visor.
*c	Align the white tape with the clip to secure it.	-	-
▭	Fixing tape (86359SC000/TAPE)	-	-

(2) Attach the fixing tape and install roof wire NO.1.
NOTE:
Cut the fixing tape into the necessary size (Recommended: 50 mm ×80 mm, 2.0 in ×3.2 in) for use.

IT

Installation

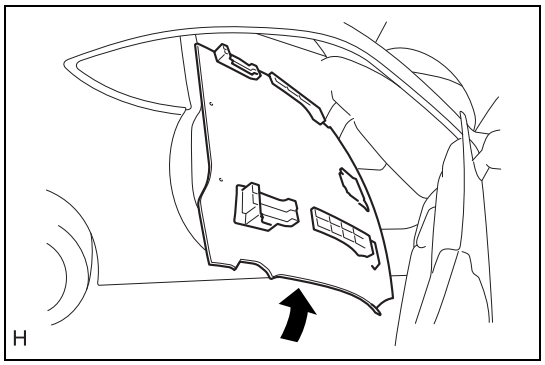

1. Installation of roof head lining ASSY (with vanity light)
   (1) Bring the roof head lining ASSY into the vehicle through the passenger's door as shown in the figure so that the ASSY does not interfere with the body interior.
   CAUTION:
   - To prevent distortion of the roof head lining ASSY, bring in the ASSY with at least two persons.
   - Do not allow the roof head lining to be stuck, resulting in bent or damaged lining.
   - Do not damage the roof head lining ASSY and body interior.

   (2) Engage the clip at the front of the vehicle.
   (3) Connect the connector of antenna code SUB-ASSY NO.3.
   (4) Install the 3 clips at the rear of the vehicle.
   (5) Connect the connector of the front pillar RH and the 3 clamps.
   (6) Connect the connector of the front pillar LH and the 2 clamps.
2. Installation of roof head lining ASSY (without vanity light)
   NOTE:
   Repeat the same installation steps for that with vanity light.

3. Installation of visor holder
   (1) Engage the 2 claws and install the 2 visor holders.
4. Installation of visor ASSY RH
   (1) Connect the connector.
   (2) With the 2 screws, install the visor ASSY RH.
5. Installation of visor ASSY LH
   NOTE:
   Install the part in the same manner as RH side.
6. Installation of map light ASSY (Refer to LI - 49)
7. Installation of center pillar garnish LH
   (1) Engage the clip (A) and the 2 guides.
   (2) With the clip (B) and 2 bolts, install the center pillar garnish LH.
   Standard value:T=7.5N·m {77kgf·cm} {5.5ft·lbf}
   CAUTION:
   Do not reuse the upper clip (A) of the center pillar garnish RH.
   Once it is removed, the clip looses its affixing capability. Be sure to replace it with a new clip.
8. Installation of center pillar garnish RH
   NOTE:
   Install the part in the same manner as LH side.
9. Installation of quarter rear trim garnish FR LH
   (1) Engage the clip and claw.
   (2) With the 2 bolts, install the quarter rear trim garnish FR LH.
   Standard value:T=7.5N·m {77kgf·cm} {5.5ft·lbf}
10. Installation of quarter rear trim garnish FR RH
    NOTE:
    Install the part in the same manner as LH side.
11. Installation of rear window side garnish LH
    (1) Engage the 2 clips and insert the guide.
    (2) With the bolt, install the rear window side garnish LH.
    Standard value:T=7.5N·m {77kgf·cm} {5.5ft·lbf}
12. Installation of rear window side garnish RH
    NOTE:
    Install the part in the same manner as LH side.

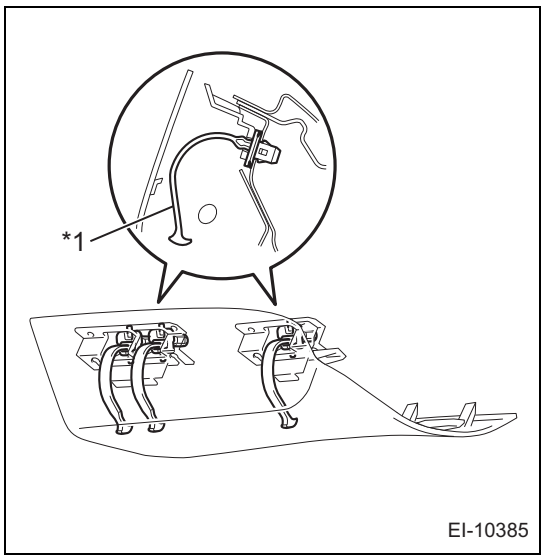

13. Installation of quarter trim lid LH
    (1) Install the 3 tether clips on the quarter trim lid LH.

Captions in illustration

*1	Tether clip

    CAUTION:
    If it is damaged, be sure to replace the tether clip with a new one.
    (2) Fit in the 3 guides.
    (3) Engage the 3 clips and 6 claws and install the quarter trim lid LH.
14. Installation of quarter trim lid RH
    NOTE:
    Install the part in the same manner as LH side.

IT

15. Installation of quarter lower trim LH
    (1) Engage the 8 clips and 8 claws and install the quarter lower trim LH.
    (2) Install the clip.
16. Installation of quarter lower trim RH
    NOTE:
    Install the part in the same manner as LH side.
17. Installation of the trunk trim cover INN LH
    (1) Tilt the rear seat backrest ASSY forward.
    (2) Install the 2 clips and install the trunk trim cover INN LH.
18. Installation of the trunk trim cover INN RH
    NOTE:
    Install the part in the same manner as LH side.
19. Installation of separate type rear seat cushion ASSY (Refer to SE - 39)
20. Installation of separate type rear seat cushion ASSY RH (Refer to SE - 39)
21. Connection of front seat outer belt ASSY LH (Refer to SB - 28)
22. Connection of front seat outer belt ASSY RH
    NOTE:
    Install the part in the same manner as LH side.
23. Installation of cowl side trim board LH
    (1) Engage the 2 clips and install the cowl side trim board LH.
    (2) Install the clip.
24. Installation of cowl side trim board RH
    NOTE:
    Install the part in the same manner as LH side.
25. Installation of front door scuff plate LH
    (1) Engage the 6 claws and install the front door scuff plate LH.
26. Installation of front door scuff plate RH
    NOTE:
    Install the part in the same manner as LH side.

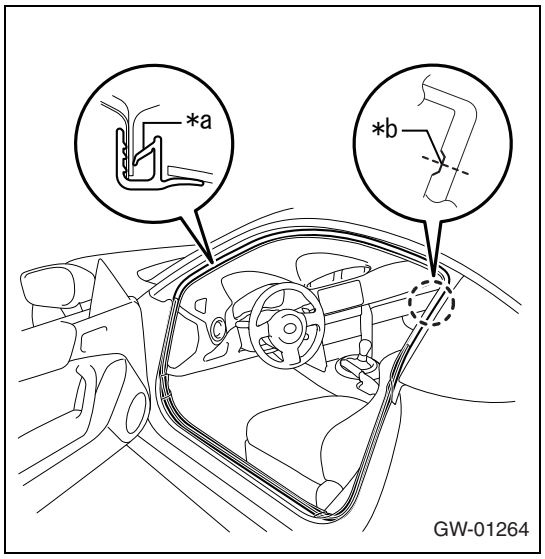

27. Installation of front door opening trim weather strip LH
    (1) Install the front door opening trim weather strip LH.
    CAUTION:
    After installation, make sure no lifting on any corner.
    NOTE:
    Install the paint marked part on the center of the body flange cut-out. Pushing into the corner makes the installation easy.

Captions in illustration

*a	Paint mark
*b	Center of the body flange cutout

28. Installation of front door opening trim weather strip RH
    NOTE:
    Install the part in the same manner as LH side.
29. Installation of front pillar garnish LH (Refer to IT - 15)
30. Installation of front pillar garnish RH
    NOTE:
    Install the part in the same manner as LH side.

IT

31. Installation of instrument panel speaker panel SUB-ASSY NO.1 (Refer to IT - 17)
32. Installation of instrument panel speaker panel SUB-ASSY NO.2
    NOTE:
    Install the part in the same manner as RH side.
33. Connection of the battery ground terminal
    Standard value:T=6.0N·m {61kgf·cm} {4.4ft·lbf}
34. Settings when removing/installing battery terminals (Refer to IN - 10)

Glass & window

Power window system

Precautions WS-3
Function inspection WS-3
Registration settings WS-5
Parts location WS-7
List of diagnostic codes WS-7
Symptom table WS-8
How to troubleshoot WS-8
Check list for interview WS-12
Checking / clearing diagnostic codes WS-12
Circuit figure WS-13
ECM terminal arrangement WS-14
Data monitor / active test WS-18
Failsafe list WS-20
B2311 . . . . . WS-25
B2314 . . . . . WS-25
B2312 . . . . . WS-32
B2315 . . . . . WS-32
B2313 . . . . . WS-35
B2316 . . . . . WS-35
Cannot operate the window from driver's seat regulator switch WS-36
Cannot operate the window from passenger's seat regulator switch WS-39
Driver's door glass AUTO UP / DOWN function does not work (manual operation works) WS-42
Passenger's door glass AUTO UP / DOWN function does not work (manual operation works) WS-43
Door glass does not fully close in AUTO UP operation (auto-reverse function is activated) WS-45
Cannot remotely control other doors from the master switch (each door can be operated by its door switch) WS-46
Even though the conditions are not met, door glass can be operated after key OFF WS-47
Index function does not operate (Driver's seat and passenger's seat) . . WS-49

Power window regulator master switch ASSY

Exploded view WS-52
Removal WS-52
Installation WS-53

Power window regulator switch ASSY (installed to the front side)

Exploded view WS-54
Removal WS-54
Installation WS-55

Power window regulator motor ASSY (installed to the front side)

Exploded view WS-56
Removal WS-58
Installation WS-58
Unit inspection WS-59

Windshield glass
Exploded view WS-61
Removal WS-62
Installation WS-66

Back window glass
Exploded view WS-74
Removal WS-76
Installation WS-80

Window defogger system
Function inspection WS-87
Parts location WS-87
Symptom table WS-89
How to troubleshoot WS-89
Check list for interview WS-91
Customize function WS-91
Circuit figure WS-92
ECM terminal arrangement WS-94
Data monitor / active test WS-95
Window defogger does not operate WS-96

Quarter window
Exploded view WS-102
Removal WS-104
Installation WS-107

Relay
Unit inspection WS-113

Power window system

Precautions

1. Precautions for Power window system

   CAUTION:

   - Power window system uses large-scale multiplex communication for vehicle body [LIN]. First, perform a “Communication function inspection”, following “How to troubleshoot”, and after checking for any malfunction in the communication system, you can proceed with troubleshooting.
   - When malfunction occurs in the auto-reverse function of the power window system, disable the AUTO operation. Otherwise, accidental pinching may arise. Check that the diagnostic code is not output, then proceed to the troubleshooting.
   - When replacing the power window regulator motor ASSY with a new one or reusing its motor, perform the initialization of the power window system. (Refer to WS - 5)
   - After replacing door glass and/or weather strip, AUTO UP operation sometimes activates auto-reverse function. In this case, the door glass is fully closed by performing the procedure in the following order (*3). AUTO UP HOLD →(the auto-reverse function (glass reverse operation)) →(*1) →AUTO UP HOLD →(the auto-reverse function (glass reverse operation)) →AUTO UP HOLD (*2).

     *1: If DOWN operation, IG OFF & timer operation OFF, and/or index operation is executed between auto-reverse function and AUTO UP HOLD, return to the beginning of the procedure.

     *2: The upper end position of the glass is relearned by this operation (AUTO UP HOLD). (Refer to WS - 5)

     *3: The failure of the door glass or regulator may prevent full closing of the door glass.
   - Even if the power window system is normal, unexpected operation of the auto-reverse function may occur resulting from the abrupt change of the opening/closing speed of the window. This symptom occurs when the system detects any value out of the learned operation.
     (a) Window opening/closing operation while driving the vehicle on rough roads.
     (b) Window opened/closed operation when door is opened/closed.
     (c) Sudden voltage variation occurs.
   - Never disconnect the battery with IG ON. If the battery is disconnected while IG ON, DTC may not be output properly.

Function inspection

1. Function inspection of window lock switch
   (1) Turn the ignition switch to ON.
   (2) Verify when the window lock switch of the power window regulator master switch ASSY is pushed, the operation of the passenger's seat power window is disabled.
   (3) Verify when window lock switch is pushed once more, the operation of the passenger's seat power window is enabled.
2. Function inspection of manual operation
   (1) Inspection of basic function (driver's seat)
      (a) Turn the ignition switch to ON.
      (b) Verify when the driver's seat switch on the power window regulator master switch ASSY is operated to UP, the power window (driver's seat door glass) moves up, and when the switch is operated to DOWN, the power window (driver's seat door glass) moves down.
   (2) Inspection of basic function (passenger's seat)
      (a) Turn the ignition switch to ON.
      (b) Verify when the power window regulator switch ASSY is operated to UP, the power window (passenger's seat door glass) moves up, and when the switch is operated to DOWN, the power window (passenger's seat door glass) moves down.
3. Function inspection of AUTO operation
   (1) Inspection of basic function (driver's seat)
      (a) Turn the ignition switch to ON.
      (b) Verify when the driver's seat switch on the power window regulator master switch ASSY is operated to UP in two stages, the driver's seat door glass operates AUTO UP, and driver's seat door glass is fully closed.
      (c) Verify when the driver's seat switch on the power window regulator master switch ASSY is operated to DOWN in two stages, the driver's seat door glass operates AUTO DOWN, and driver's seat door glass is fully open.
      (d) Verify while AUTO DOWN is in operation, when the driver's seat switch on the power window regulator master switch ASSY is operated to UP, the door glass moves up.
      (e) Verify while AUTO UP is in operation, when the driver's seat switch on the power window regulator master switch ASSY is operated to DOWN, the door glass moves down.
   (2) Inspection of basic function (passenger's seat)

(a) Turn the ignition switch to ON.
(b) Verify when the switch on the power window regulator switch ASSY is operated to UP in two stages, the passenger's seat door glass operates AUTO UP, and passenger's seat door glass is fully closed.
(c) Verify when the switch on the power window regulator switch ASSY is operated to DOWN in two stages, the passenger's seat door glass operates AUTO DOWN, and passenger's seat door glass is fully open.
(d) Verify while AUTO DOWN is in operation, when the switch on the power window regulator switch ASSY is operated to UP, the door glass of the passenger's seat moves up.
(e) Verify while AUTO UP is in operation, when the switch on the power window regulator switch ASSY is operated to DOWN, the door glass of the passenger's seat moves down.

4. Function inspection of remote controlled manual operation
   (1) Turn the ignition switch to ON.
   (2) Verify when the remote control switch for the power window regulator master switch ASSY for passenger's seat is operated to UP, the power window (passenger's seat door glass) moves up.
   (3) Verify that when the remote control switch for the passenger seat on the power window regulator master switch ASSY is operated to DOWN, the power window (passenger's seat door glass) moves down.
5. Function inspection of remote controlled automatic operation
   (1) Turn the ignition switch to ON.
      (a) Verify when the remote control switch for passenger's seat on the power window regulator master switch ASSY is operated to UP in two stages, the passenger's seat door glass operates AUTO UP, and passenger's seat door glass is fully closed.
      (b) Verify when the remote control switch for passenger's seat on the power window regulator master switch ASSY is operated to DOWN in two stages, the passenger's seat door glass operates AUTO DOWN, and passenger's seat door glass is fully open.
6. Function inspection of after-key-OFF operation
   (1) After turning IG from ON to OFF, verify that all seat's power windows are operable by the power window regulator master switch ASSY. Also verify that after the driver's or passenger's door is opened, the power window cannot be operated.
   (2) After turning IG from ON to OFF, verify that passenger's seat power window is operable by the power window regulator switch ASSY. Also verify that after the driver's or passenger's door is opened, the power window cannot be operated.
   (3) When approx. 45 seconds have passed after IG was turned from ON to OFF, verify that all power windows cannot be operated. However, if the auto-reverse function is in operation, the operation continues until it is completed. (AUTO operation stops when 45 seconds have elapsed.)

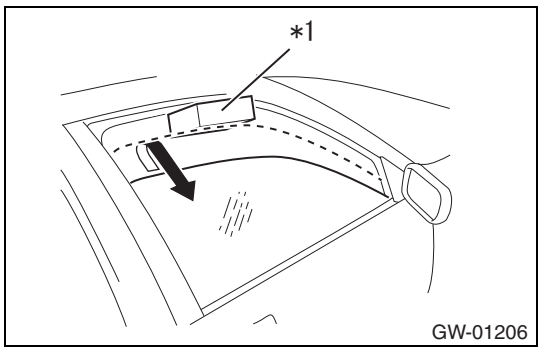

7. Inspection of auto-reverse function
   (1) Basic function inspection
      CAUTION:
      Never use your hand or other part of your body to be pinched for checking the function. Work with great care for accidental pinching.
      NOTE:
      Auto-reverse function is operable with IG ON when AUTO UP or manual UP is in operation.
      (a) Fully open all power windows (door glasses).
      (b) Hold a styrene foam block (approx. 12 cm (4.72 in) thick) or equivalent on the position where it is caught when the door glass is fully closed.

Captions in illustration

*1	Styrene foam block or equivalent

      (c) When full close operation of the power window (door glass) is activated with AUTO UP or manual UP operation, verify that the window stops at the position where it contacts with styrene foam block or equivalent, comes into DOWN operation, and stops where it moves down approx. 200 mm (8 in).
      NOTE:
      If pinching is detected, it moves down approx. 50 mm (2 in) after stopping, and stops. If opening of the window is less than

approx. 200 mm (8 in), however, it moves down approx. 200 mm (8 in) or 10 seconds and stops.

(d)During DOWN operation, make sure that the UP operation cannot be activated by the power window regulator master switch ASSY.

8. Inspection of index function
   (1) Make sure that when the driver's or passenger's door is opened, the window glass of the opened side moves down approx. 10 mm (0.4 in) automatically from fully closed position.
   (2) Make sure that when the driver's or passenger's door is closed, the window glass of the closed side moves up to fully closed position.
   NOTE:
   If the window glass opens over approx. 10 mm (0.4 in) from the fully closed position, no index control is performed. Even if the window glass is open more than approx. 10 mm (0.4 in) because of looseness of the regulator, however, the window moves up automatically.
9. Inspection of power window regulator master switch ASSY (driver's seat)
   (1) Inspection of operation indicator
   (a)Make sure that when performing IG OFF →ON with connector connected, the operation indicator (LED), located on switch part of the power window regulator master switch ASSY, lights up.
10. Inspection of power window regulator switch ASSY (passenger's seat)
   (1) Inspection of operation indicator
   (a)Make sure that when performing IG OFF →ON with connector connected, the operation indicator (LED), located on switch part of the power window regulator switch ASSY, lights up.

Registration settings

1. Initialization of power window regulator motor
   CAUTION:
   - When replacing the power window regulator motor ASSY with a new one or reusing its motor, the power window regulator motor must be initialized. If the initialization is not performed, AUTO operation, auto-reverse function, and after-key-OFF operation function does not work properly.
   - If the power window regulator motor ASSY is replaced with a new one, DTC B2313 and B2316 are output. After initializing power window (initialization of pulse sensor), erase the diagnostic codes.
   - After replacing the glass and/or weather strip, an AUTO UP operation on the worked glass (door glass) sometimes causes detection of value out of learned operation, then activates auto-reverse function. In this case, the door glass is fully closed by performing the procedure in the following order (*3). AUTO UP HOLD →(the auto-reverse function (glass reverse operation)) (*1) →AUTO UP HOLD →(the auto-reverse function (glass reverse operation)) →AUTO UP HOLD (*2).
     *1: If DOWN operation, IG OFF & timer operation OFF, and/or index operation is executed between auto-reverse function and AUTO UP HOLD, return to the beginning of the procedure.
     *2: The upper end position of the glass is relearned by this operation (AUTO UP HOLD). (Refer to WS - 5)
     *3: The failure of the door glass or regulator may prevent full closing of the door glass.
   - If the initialization cannot be completed normally, check the large-scale multiplex communication system for vehicle body [LIN]. (Refer to NW - 5)

   NOTE:
   After battery replacement, no initialization for power window regulator motor is needed because the nonvolatile memory stores the necessary information.
   (1) Initial setting method
   (a)Close the door and turn the ignition switch to ON.

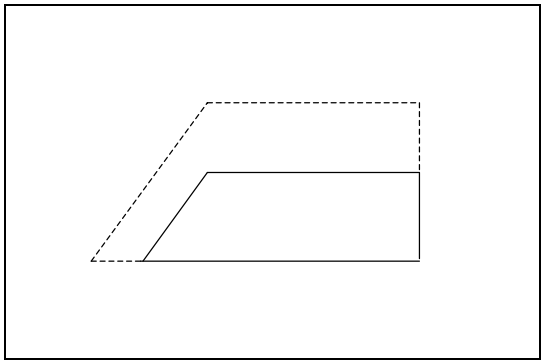

(b)As shown in the figure, move the door glass to middle position.

(c) Operate power window regulator switch (AUTO UP HOLD) and close the door glass completely, and continue the switch operation for 1 second or more. This will reset the position of the door glass, and the initialization is completed.
NOTE:

- The initialization of the passenger's seat is performed with the passenger's side switch.
- Before completion of the initialization, the window of the passenger's seat is not operable through the power window regulator master switch ASSY.
- Until the initialization is complete, AUTO UP, DOWN or reverse operation is disabled.

Parts location

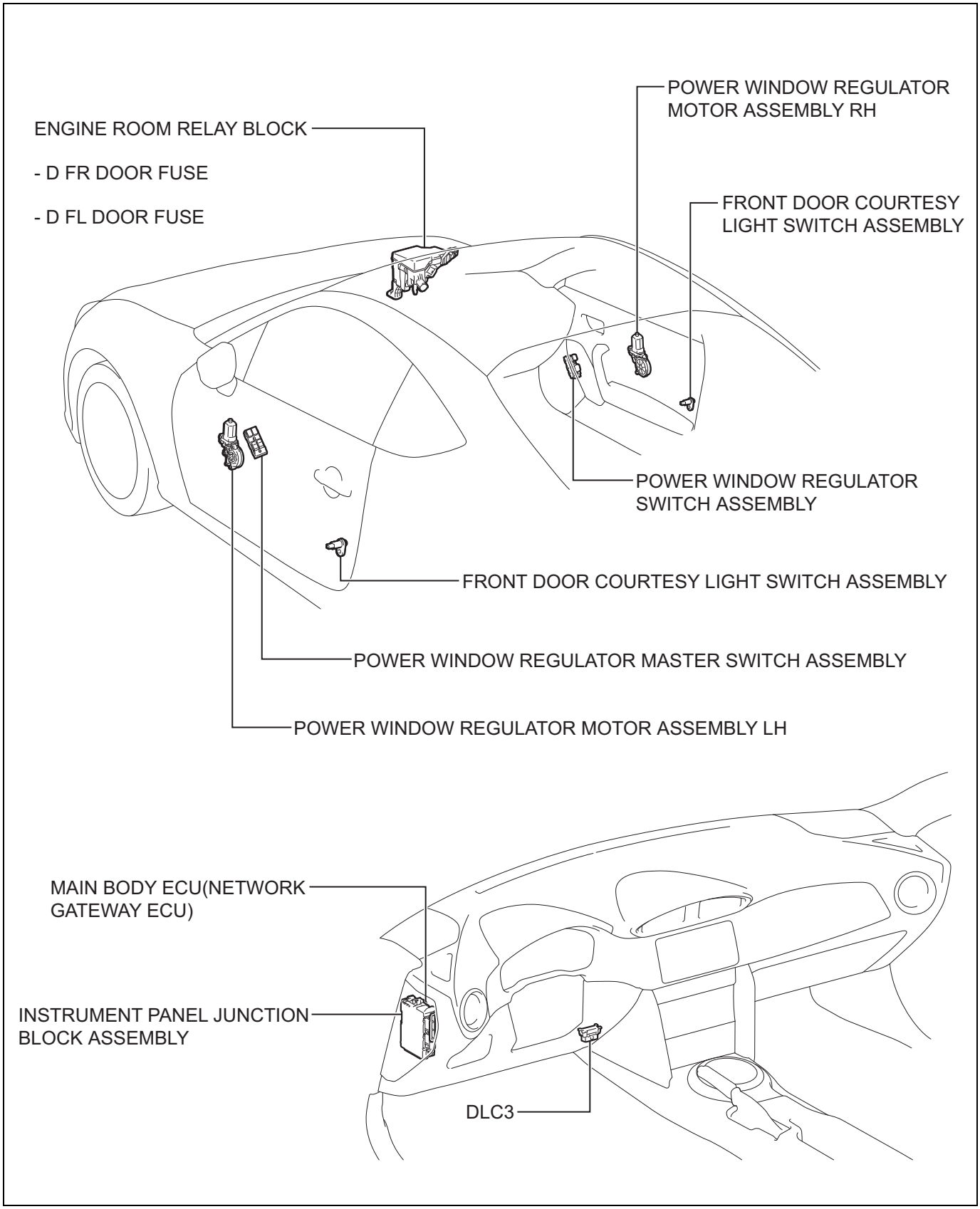

List of diagnostic codes

Diagnostic codes	Diagnostic items	Reference pages
B2311	[Driver's seat pulse failure abnormal detection]	WS - 25

Diagnostic codes	Diagnostic items	Reference pages
B2312	[Driver's seat SW ON stuck]	WS - 32
B2313	[Driver's seat glass position, window slide characteristic data not recorded status detection]	WS - 35
B2314	[Passenger's seat pulse failure abnormal detection]	WS - 25
B2315	[Passenger's seat SW ON stuck]	WS - 32
B2316	[Passenger's seat glass position, window slide characteristic data not recorded status detection]	WS - 35

Symptom table

Manual operation

Symptoms	Inspection items	Reference pages
Power windows of all seats are inoperable.	Vehicle wiring harness and connector	-
	Main body ECM (Network gateway computer)	WS - 14
Cannot operate the window from driver's seat regulator switch	Refer to trouble shooting flowchart "Cannot operate the window from driver's seat regulator switch".	WS - 36
Cannot operate the window from passenger's seat regulator switch	Refer to trouble shooting flowchart "Cannot operate the window from each seat regulator switch".	WS - 39

AUTO operation

Symptoms	Inspection items	Reference pages
Driver's door glass AUTO UP / DOWN function does not work (manual operation works)	Refer to troubleshooting flowchart "Driver's door glass AUTO UP/ DOWN function does not work (manual operation works)".	WS - 42
Passenger's door glass AUTO UP / DOWN function does not work (manual operation works)	Refer to troubleshooting flowchart "Passenger's door glass AUTO UP/ DOWN function does not work (manual operation works)".	WS - 43

Remote operation

Symptoms	Inspection items	Reference pages
Cannot remotely control other doors from the master switch (can be operated by switching on the passenger's door).	Function inspection of window lock switch	WS - 3
	Refer to trouble shooting flowchart "Cannot remotely control other doors from the master switch".	WS - 46

Operating condition

Symptoms	Inspection items	Reference pages
Door glass does not fully close in AUTO UP operation (auto-reverse function is activated).	Refer to troubleshooting flowchart "Door glass does not fully close in AUTO UP operation (auto-reverse function is activated)".	WS - 45
Door glass does not fully open in AUTO DOWN operation (the glass is left).	Refer to troubleshooting flowchart "Door glass does not fully close in AUTO UP operation (auto-reverse function is activated)".	WS - 45
Even though the conditions are not met, door glass can be operated after key OFF.	Refer to troubleshooting flowchart "Even though the conditions are not met, door glass can be operated after key OFF".	WS - 47
Index function does not operate. (Driver's seat and passenger's seat)	Refer to troubleshooting flowchart "Index function does not operate. (Driver's seat and passenger's seat)".	WS - 49

How to troubleshoot

1	Bring in the car

Next

2	Interview and phenomenon check

(1) Perform the interview and phenomenon check (Refer to WS - 12)

Next

3	Basic inspection

(1) Inspect the battery voltage.

Voltage: 11 to 14 V

(2) According to the parts arrangement drawing and/or circuit figure, check the blown fuse, broken wire harness, short circuit, and/or improper connection that can be inspected visually.

NOTE:

If battery voltage is 11 V or less, recharge or replace the battery before starting the diagnostic program.

Next

4	Communication function inspection of large-scale multiplex communication system for vehicle body [LIN]

(1) Use SSM4 to check the communication functions of the large-scale multiplex communication system for vehicle body [LIN] to confirm the communication system has no fault. (Refer to NW - 7)

NOTE:

For output diagnostic code, see the list of diagnostic codes

Result

Result	Go to
Communication function of large-scale multiplex communication system for vehicle body [LIN] is normal. [No diagnostic code output (LIN communication fault, ECM communication fault/communication breakdown)]	A
Communication function of large-scale multiplex communication system for vehicle body [LIN] has fault. [DTC (LIN communication error, ECM communication error, or lost communication) is output]	B

B → Go to "Large-scale multiplex communication system for vehicle body [LIN]" (Refer to NW - 4)

A

5	DTC check

(1) Using SSM4, check that there is no DTC displayed. (Refer to WS - 12)

NOTE:

For output diagnostic code, see the list of diagnostic codes, WS - 7.

Result

Result	Go to
No DTC output	A
DTC output B2311 and B2314.	B
DTC output B2312 and B2315.	C
DTC output B2313 and B2316.	D

B → Go to the troubleshooting flowchart for DTC B2311 and B2314 (Refer to WS - 25).

C → Go to the troubleshooting flowchart for DTC B2312 and B2315 (Refer to WS - 32).

D → Go to the troubleshooting flowchart for DTC B2313 and B2316 (Refer to WS - 35).

A

6	Symptom table

(1) Check the symptom table. (Refer to WS - 8)

Result

Result	Go to
Not applicable to the symptom table.	A
Applicable to the symptom table.	B

B → Go to Step 8.

A

7	Perform troubleshooting based on the malfunction symptom with the following methods.

(1) Function inspection (Refer to WS - 3)
(2) Data monitor / active test (Refer to WS - 18)
(3) ECM terminal arrangement (Refer to WS - 14)
(4) Unit inspection

Next

8	Adjustment, repair, or replacement

Result

Result	Go to
Replacement or removal/installation work is done for door window regulator and power window regulator motor ASSY for each seat.	A
No replacement or removal/installation work is not done for door window regulator and power window regulator motor ASSY for each seat.	B

B → Go to Step 10.

A

9	Power window regulator motor initialization (pulse sensor initialization)

(1) Perform the glass position reset on the worked area. (Refer to WS - 5)
NOTE:
If the initialization is not performed, AUTO operation, auto-reverse function, and after-key-OFF operation function does not work.

Next

10	Confirmation test

Next

Complete

Check list for interview

Power Window System Diagnosis Checklist for Interview

Year/date of vehicle bring-in Year Month Date

Name				Registration No.		First registration	Year Month Date
				Vehicle model		Frame No.	
Front		Engineer		Engine type		Odometer reading	
Customer specified content							

Date when trouble occurred (from when)	Year Month Date Time
Frequency of occurrence	Continuous Sometimes (times/day, times/month)
Condition of trouble occurrence	

Weather	Fine / Cloudy / Rainy / Snowy / Other ( )	Temperature	Approx. ( ) °C (°F)
Road	Inner city Suburbs Highway Others ( )		Paved road / Unpaved road

Trouble symptom

- ☐ Power window (each door glass) cannot be operated by each door switch.
  - ☐ Driver's seat
  - ☐ Passenger's seat
- ☐ AUTO UP/DOWN of door glass cannot be operated. (Manual operation possible)
  - ☐ Driver's seat
  - ☐ Passenger's seat
- ☐ Remote operation for each seat through master switch cannot be operated. (can be operated through each seat switch)
- ☐ Can be operated after key OFF, even if operating conditions are not met.
- ☐ Door glass does not close completely in AUTO UP operation. (auto-reverse function operates)
- ☐ Index function does not operate.
- ☐ Others

Conditions for normal recovery	☐ When IG ON ☐ When engine starts ☐ When ( ) switch is operated
Condition when trouble occurred	☐ IG OFF → ON ☐ When ( ) switch is operated ☐ Others ( )

GW-01263

Checking / clearing diagnostic codes

1. Preparation before inspection
   (1) Turn the ignition switch to OFF.

2. Checking diagnostic codes (reading with SSM4)
   (1) With IG OFF, connect SSM4 to DLC3.
   (2) Turn IG to ON, and turn on the SSM4.
   (3) Follow the SSM4 display and operate, and select [Each System] →[Power Window] →[DTC].
   (4) Check the diagnostic codes.
3. Clearing diagnostic code records (Cleared by the SSM4)
   (1) With IG OFF, connect SSM4 to DLC3.
   (2) Turn IG to ON, and turn on the SSM4.
   (3) Follow the SSM4 display and operate, and select [Each System] →[Power Window] →[Clear Memory] and delete DTC.
   (4) Inspect the diagnosis codes again, and check that the malfunction code was cleared, and that the normal code is displayed.
   CAUTION:
   - If you can't clear it, start over from IG OFF status.
   - Do not use the SSM4 to delete diagnostic codes until the cause of the trouble has been identified.

Circuit figure

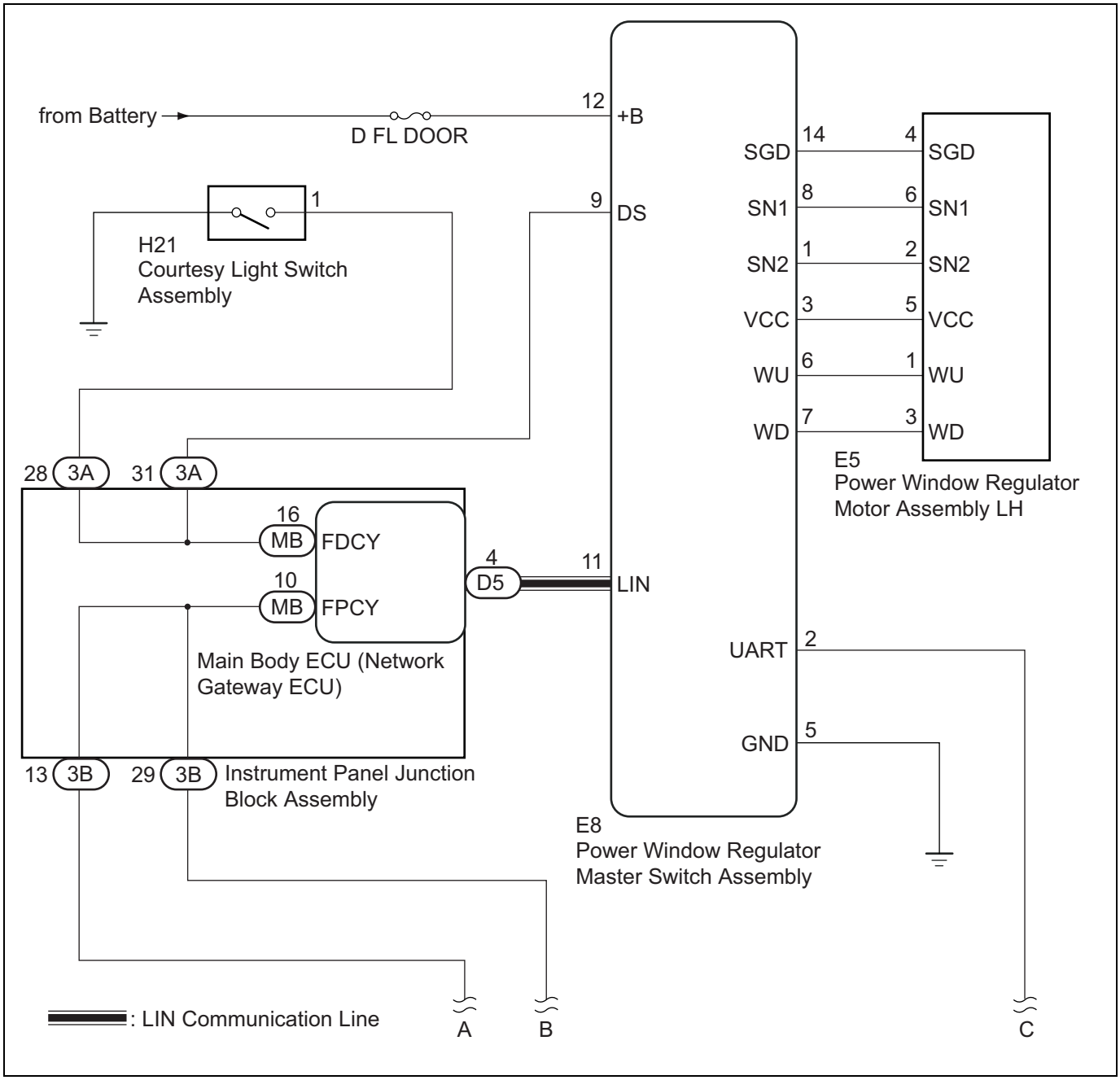

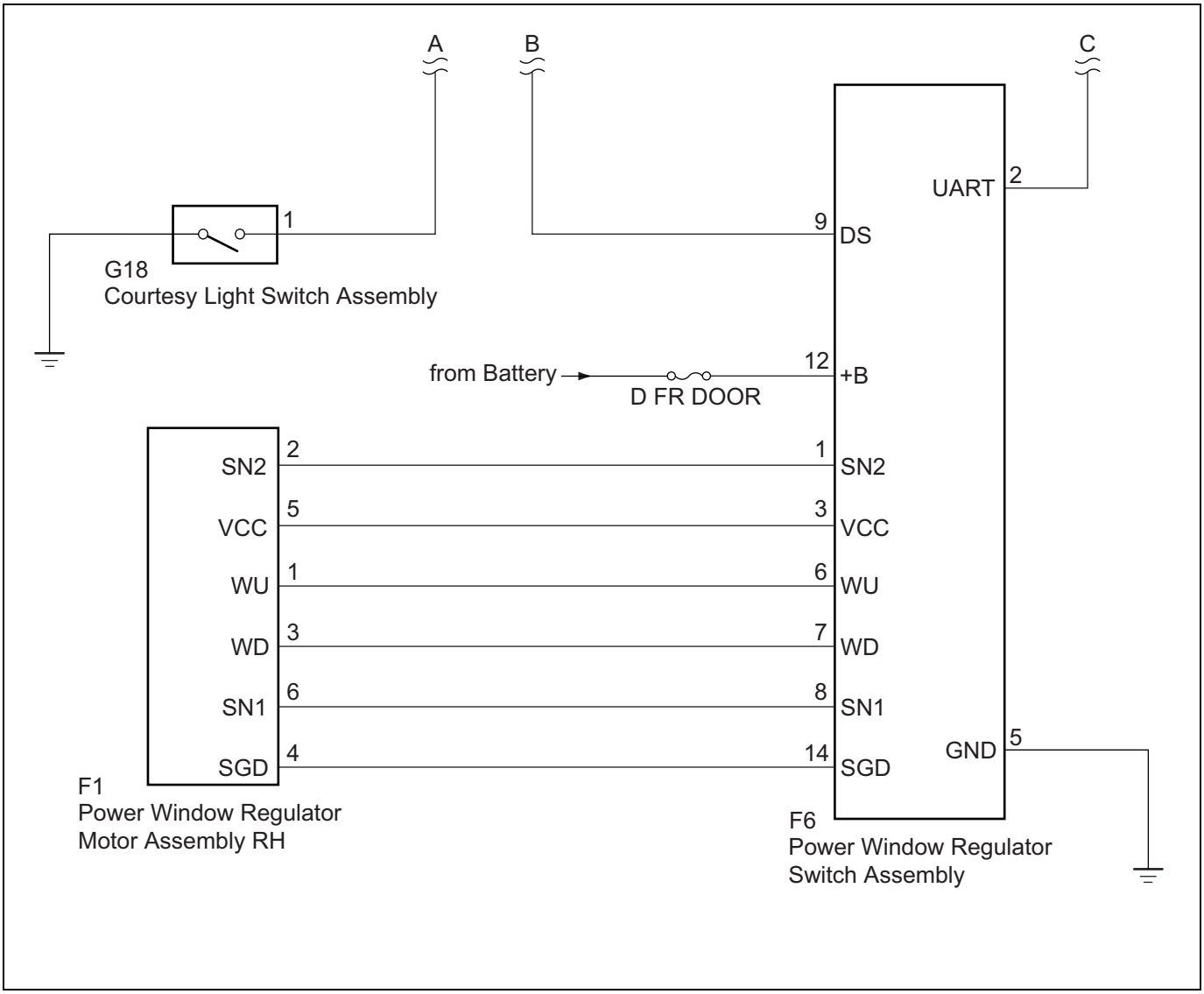

ECM terminal arrangement

WS

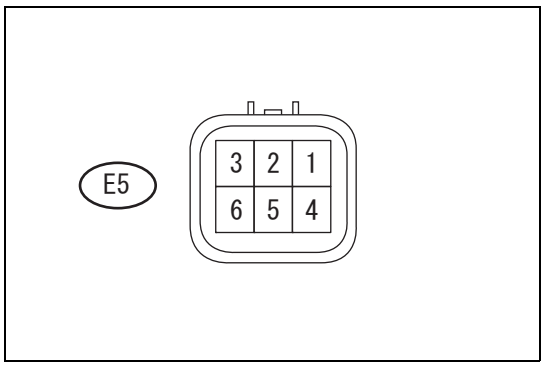

1. Power window regulator motor ASSY LH (driver's seat)
   (1) Disconnect the connector E5 of power window regulator motor ASSY LH (driver's seat).
   (2) Measure the resistance and voltage between terminals.

Standard value

Terminal No. (Terminal symbol)	Inspection conditions	Standard value
E5-5 (VCC) ←→E5-4 (SGD)	Always	11 to 14 V
E5-4 (SGD) ←→Chassis ground	Always	Less than 1 Ω

NOTE:
If it is outside the standard values, the vehicle is defective.

(3) Connect the connector E5 of power window regulator motor ASSY LH (driver's seat).

(4) Measure the voltage between the terminals.

Standard value

Terminal No. (Terminal symbol)	Inspection conditions	Standard value
E5-1 (WU) ←→E5-4 (SGD)	IG ON, master switch OFF→UP (manual operation)	11 to 14 V →Less than 1 V
E5-1 (WU) ←→E5-4 (SGD)	IG ON, driver's seat door glass full open→master switch UP (automatic operation)→door glass fully closed	11 to 14 V→less than 1 V→11 to 14 V
E5-3 (WD) ←→E5-4 (SGD)	IG ON, master switch OFF→DOWN (manual operation)	11 to 14 V →Less than 1 V
E5-3 (WD) ←→E5-4 (SGD)	IG ON, driver's seat door glass fully closed→master switch DOWN (automatic operation)→door glass full open	11 to 14 V→less than 1 V→11 to 14 V

NOTE:
If it is not within the standard, failure exists in power window regulator motor ASSY LH (driver's seat).

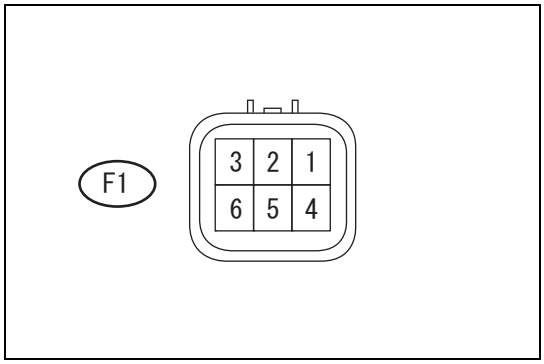

2. Power window regulator motor ASSY RH (passenger's seat)
   (1) Disconnect the connector F1 of power window regulator motor ASSY RH (passenger's seat).
   (2) Measure the resistance and voltage between terminals.

Standard value

Terminal No. (Terminal symbol)	Inspection conditions	Standard value
F1-5 (VCC) ←→F1-4 (SGD)	Always	11 to 14 V
F1-4 (SGD) ←→Chassis ground	Always	Less than 1 Ω

NOTE:
If it is outside the standard values, the vehicle is defective.

(3) Connect the connector F1 of power window regulator motor ASSY RH (passenger's seat).
(4) Measure the voltage between the terminals.

Standard value

Terminal No. (Terminal symbol)	Inspection conditions	Standard value
F1-1 (WU) ←→F1-4 (SGD)	IG ON, regulator switch OFF→UP (manual operation)	11 to 14 V →Less than 1 V
F1-1 (WU) ←→F1-4 (SGD)	IG ON, passenger's seat door glass full open→regulator switch UP (automatic operation)→door glass fully closed	11 to 14 V→less than 1 V→11 to 14 V
F1-3 (WD) ←→F1-4 (SGD)	IG ON, regulator switch OFF→DOWN (manual operation)	11 to 14 V →Less than 1 V
F1-3 (WD) ←→F1-4 (SGD)	IG ON, passenger's seat door glass fully closed→regulator switch DOWN (automatic operation)→door glass full open	11 to 14 V→less than 1 V→11 to 14 V

NOTE:
If it is not within the standard, failure exists in power window regulator motor ASSY RH (passenger's seat).

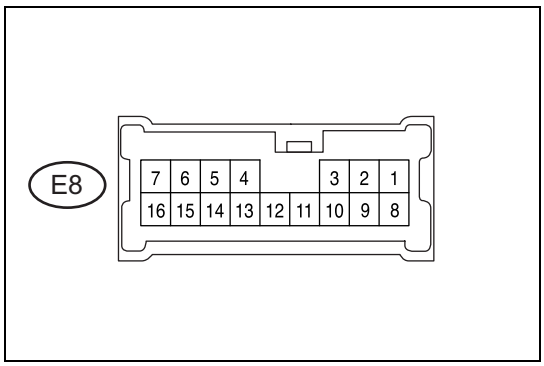

3. Power window regulator master switch ASSY
   (1) Disconnect the connector E8 of power window regulator master switch ASSY.
   (2) Measure the resistance and voltage between terminals.

Standard value

Terminal No. (Terminal symbol)	Inspection conditions	Standard value
E8-12 (+B) ←→E8-5 (GND)	Always	11 to 14 V
E8-5 (GND) ←→chassis ground	Always	Less than 1 Ω

NOTE:
If it is outside the standard values, the vehicle is defective.

(3) Connect the connector E8 of power window regulator master switch ASSY.

(4) Measure the voltage between the terminals.

Standard value

Terminal No. (Terminal symbol)	Inspection conditions	Standard value
E8-6 (WU) ←→E8-5 (GND)	IG ON, master switch OFF→UP (manual operation)	11 to 14 V →Less than 1 V
E8-6 (WU) ←→E8-5 (GND)	IG ON, driver's seat door glass full open→master switch UP (automatic operation)→door glass fully closed	11 to 14 V→less than 1 V→11 to 14 V
E8-7 (WD) ←→E8-5 (GND)	IG ON, master switch OFF→DOWN (manual operation)	11 to 14 V →Less than 1 V
E8-7 (WD) ←→E8-5 (GND)	IG ON, driver's seat door glass fully closed→master switch DOWN (automatic operation)→door glass full open	11 to 14 V→less than 1 V→11 to 14 V

NOTE:
If it is not within the standard, failure exists in power window regulator master switch ASSY.

4. Power window regulator switch ASSY

(1) Disconnect the connector F6 of power window regulator switch ASSY.

(2) Measure the resistance and voltage between terminals.

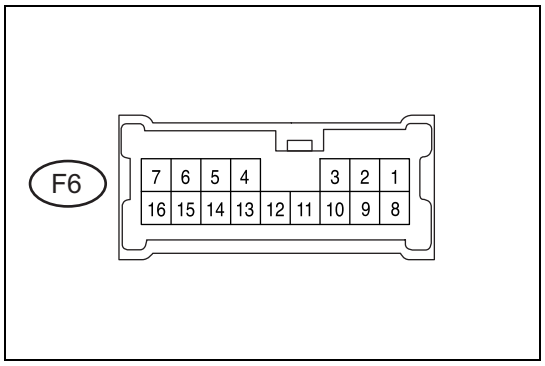

Standard value

Terminal No. (Terminal symbol)	Inspection conditions	Standard value
F6-12 (+B) ←→F6-5 (GND)	Always	11 to 14 V
F6-5 (GND) ←→chassis ground	Always	Less than 1 Ω

NOTE:
If it is outside the standard values, the vehicle is defective.

(3) Connect the connector F6 of power window regulator switch ASSY.

(4) Measure the voltage between the terminals.

Standard value

Terminal No. (Terminal symbol)	Inspection conditions	Standard value
F6-6 (WU) ←→F6-5 (GND)	IG ON, passenger's switch OFF→UP (manual operation)	11 to 14 V →Less than 1 V
F6-6 (WU) ←→F6-5 (GND)	IG ON, passenger's seat door glass full open→passenger's seat switch UP (automatic operation)→door glass fully closed	11 to 14 V→less than 1 V→11 to 14 V
F6-7 (WD) ←→F6-5 (GND)	IG ON, passenger's switch OFF→DOWN (manual operation)	11 to 14 V →Less than 1 V
F6-7 (WD) ←→F6-5 (GND)	IG ON, passenger's seat door glass fully closed→passenger's seat switch DOWN (automatic operation)→door glass full open	11 to 14 V→less than 1 V→11 to 14 V

NOTE:
If it is not within the standard, failure exists in power window regulator switch ASSY.

5. Instrument panel junction block ASSY, main body ECM (Network gateway computer)

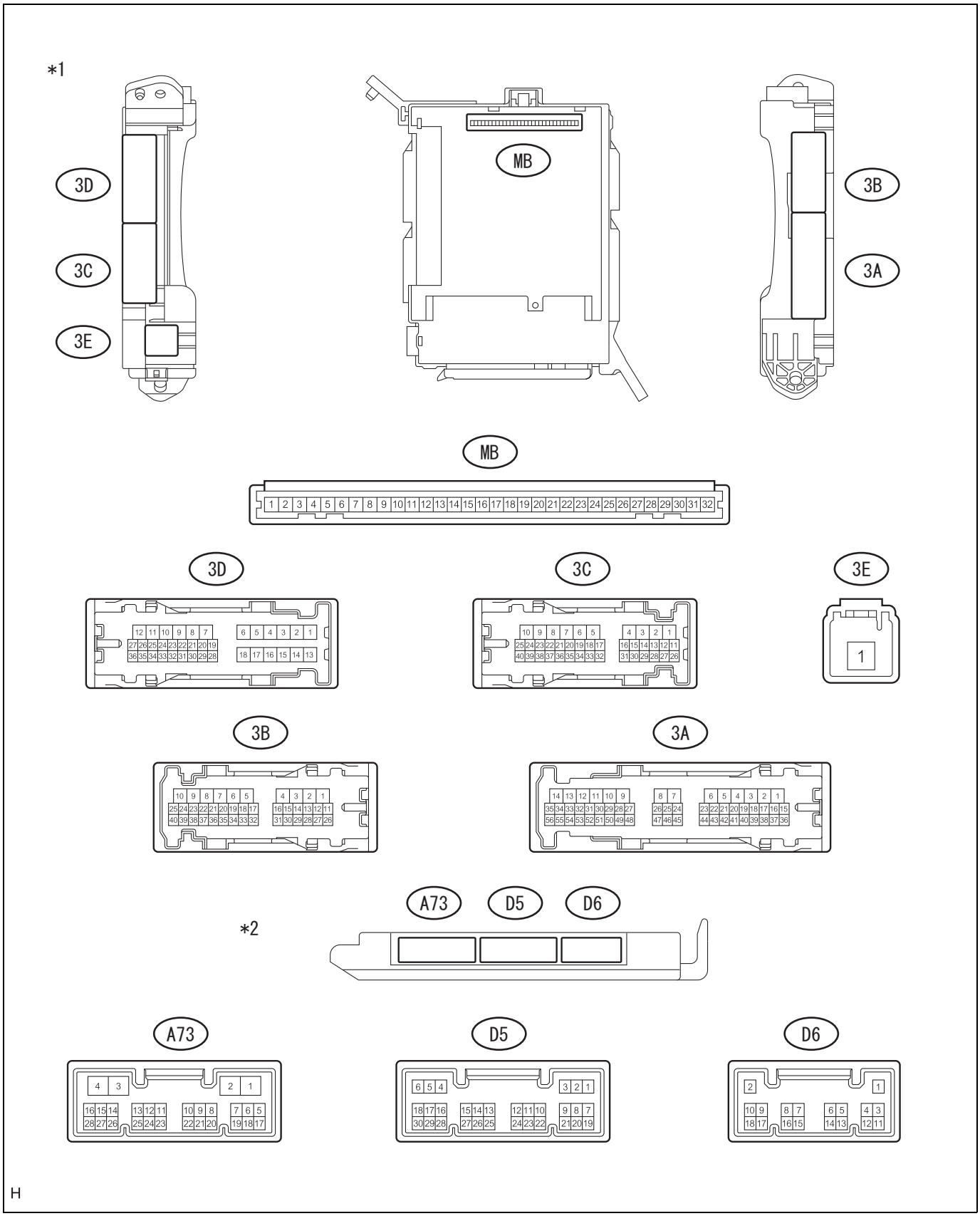

H

Captions in illustration

*1	Instrument panel junction block ASSY	*2	Main body ECM (Network gateway computer)

(1) Inspection of the instrument panel junction block ASSY and the main body ECM (network gateway computer)
(a)Remove the main body ECM (network gateway computer) from the instrument panel junction block ASSY.

(b)Measure the voltage and resistance between terminals.

Standard value

Terminal No. (Terminal symbol)	Inspection conditions	Standard value
MB-1 (BECU) ←→chassis ground	Always	11 to 14 V
MB-8 (IG) ←→chassis ground	IG OFF →IG ON	Less than 1 V →11 to 14 V
MB-9 (ACC) ←→chassis ground	IG OFF →ACC ON	Less than 1 V →11 to 14 V
MB-11 (GND) ←→chassis ground	Always	Less than 1 Ω
D5-22 (ACC) ←→chassis ground*	IG OFF →ACC ON	Less than 1 V →11 to 14 V

*: With smart entry & start system

NOTE:

If it is outside the standard values, the vehicle is defective.

(c)Install the main body ECM (network gateway computer) on the instrument panel junction block ASSY.

(d)Measure the voltage between the terminals.

Standard value

Terminal No. (Terminal symbol)	Inspection conditions	Standard value
D5-4 ←→chassis ground	IG ON	Pulse generation
D5-5 (FRCL) ←→chassis ground	With driver's door closed →opened	11 to 14 V →Less than 1 V
D5-6 (FLCL) ←→chassis ground	With passenger's door closed →opened	11 to 14 V →Less than 1 V

NOTE:

If it is outside the standard values, the main body ECM (network gateway computer) is defective.

Data monitor / active test

1. Inspection with SSM4

(1) Data monitor

(a)Use the SSM4 and data monitor to determine functionality and narrow down the defective part.

SSM4 screen: [Each System] →[Power Window] →[Data monitor]

Item name	Description/display range	Normal value	Remarks
[Drivers seat AUTO SW state]	Operation signal of switch AUTO for the driver's seat/ Display range: [ON-OFF]	[ON]: AUTO switch is in operation. [OFF]: In neutral or manual operation	-
[Drivers seat MANUAL UP SW state]	Operation signal of switch UP for the driver's seat/ Display range: [ON-OFF]	[ON]: UP switch is in operation. [OFF]: Neutral	-
[Drivers seat MANUAL DOWN SW state]	Operation signal of switch DOWN for the driver's seat/ Display range: [ON-OFF]	[ON]: DOWN switch is in operation. [OFF]: Neutral	-
[Drivers seat Courtesy SW state]	Status of driver's door courtesy lamp switch/ Display range: [ON-OFF]	[ON]: The driver's door is open. [OFF]: The driver's door is closed.	-
[Passenger seat AUTO SW state]	Operation signal of switch AUTO for the passenger's seat/ Display range: [ON-OFF]	[ON]: AUTO switch is in operation. [OFF]: In neutral or manual operation	-
[Passenger seat MANUAL UP SW state]	Operation signal of switch UP for the passenger's seat/ Display range: [ON-OFF]	[ON]: UP switch is in operation. [OFF]: Neutral	-
[Passenger seat MANUAL DOWN SW state]	Operation signal of switch DOWN for the passenger's seat/ Display range: [ON-OFF]	[ON]: DOWN switch is in operation. [OFF]: Neutral	-
[Passenger seat Courtesy SW state]	Status of passenger's door courtesy lamp switch/ Display range: [ON-OFF]	[ON]: The passenger's door is open. [OFF]: The passenger's door is closed.	-

Item name	Description/display range	Normal value	Remarks
[Remote SW AUTO SW state]	Operational status of switch AUTO for the passenger's seat/ Display range: [ON-OFF]	[ON]: AUTO switch is in operation. [OFF]: In neutral or manual operation	-
[Remote SW MANUAL UP SW state]	Operational status of switch UP for the passenger's seat/ Display range: [ON-OFF]	[ON]: UP switch is in operation. [OFF]: Neutral	-
[Remote SW MANUAL DOWN SW state]	Operational status of switch DOWN for the passenger's seat/ Display range: [ON-OFF]	[ON]: DOWN switch is in operation. [OFF]: Neutral	-
[Drivers seat AUTO SW Present ON trouble]	Current stuck status of switch AUTO for the Driver's seat/ Display range: [ON-OFF]	[ON]: Stuck in ON [OFF]: Normal	-
[Drivers seat MANUAL UP SW Present ON trouble]	Current stuck status of switch Up for the driver's seat/ Display range: [ON-OFF]	[ON]: Stuck in ON [OFF]: Normal	-
[Drivers seat MANUAL DOWN SW Present ON trouble]	Current stuck status of switch DOWN for the driver's seat/ Display range: [ON-OFF]	[ON]: Stuck in ON [OFF]: Normal	-
[Remote SW AUTO SW Present ON trouble]	Current stuck status of switch AUTO for the passenger's seat/ Display range: [ON-OFF]	[ON]: Stuck in ON [OFF]: Normal	-
[Remote SW MANUAL UP SW Present ON trouble]	Current stuck status of switch UP for the passenger's seat/ Display range: [ON-OFF]	[ON]: Stuck in ON [OFF]: Normal	-
[Remote SW MANUAL DOWN SW Present ON trouble]	Current stuck status of switch DOWN for the passenger's seat/ Display range: [ON-OFF]	[ON]: Stuck in ON [OFF]: Normal	-
[Passenger seat AUTO SW Present ON trouble]	Current stuck status of switch AUTO for the passenger's seat/ Display range: [ON-OFF]	[ON]: Stuck in ON [OFF]: Normal	-
[Passenger seat MANUAL UP SW Present ON trouble]	Current stuck status of switch UP for the passenger's seat/ Display range: [ON-OFF]	[ON]: Stuck in ON [OFF]: Normal	-
[Passenger seat MANUAL DOWN SW Present ON trouble]	Current stuck status of switch DOWN for the passenger's seat/ Display range: [ON-OFF]	[ON]: Stuck in ON [OFF]: Normal	-
[Drivers seat window position counter]	Position information of driver's door glass Display range: -100 to 700	-	-
[Passenger seat window position counter]	Position information of passenger's door glass/ Display range: -100 to 700	-	-
[Drivers seat sensor failure1 Now]	Current status of D-seat sensor power failure occurrence/ Display range: [Yes/No]	[Yes]: Malfunction [No]: Normal	-
[Drivers seat sensor failure2 Now]	Current status of D-seat PLS1 failure occurrence/ Display range: [Yes/No]	[Yes]: Malfunction [No]: Normal	-
[Drivers seat sensor failure3 Now]	Current status of D-seat PLS2 failure occurrence/ Display range: [Yes/No]	[Yes]: Malfunction [No]: Normal	-
[Drivers seat sensor failure4 Now]	Current status of D-seat pulse direction failure occurrence/ Display range: [Yes/No]	[Yes]: Malfunction [No]: Normal	-
[Drivers seat sensor failure5 Now]	Current status of D-seat both pulse stopping failure occurrence/ Display range: [Yes/No]	[Yes]: Malfunction [No]: Normal	-
[Drivers seat sensor failure6 Now]	Current status of D-seat opening direction dead band deviation failure occurrence/ Display range: [Yes/No]	[Yes]: Malfunction [No]: Normal	-
[Drivers seat initial failure Now]	Current status of occurrence of D-seat glass position and window slide not recorded/ Display range: [Yes/No]	[Yes]: Malfunction [No]: Normal	-
[Drivers seat ECU failure Now]	Current status of D-seat EEPROM read failure occurrence/ Display range: [Yes/No]	[Yes]: Malfunction [No]: Normal	-
[Passenger seat sensor failure1 Now]	Current status of P-seat sensor power failure occurrence/ Display range: [Yes/No]	[Yes]: Malfunction [No]: Normal	-
[Passenger seat sensor failure2 Now]	Current status of P-seat PLS1 failure occurrence/ Display range: [Yes/No]	[Yes]: Malfunction [No]: Normal	-
[Passenger seat sensor failure3 Now]	Current status of P-seat PLS2 failure occurrence/ Display range: [Yes/No]	[Yes]: Malfunction [No]: Normal	-
[Passenger seat sensor failure4 Now]	Current status of P-seat pulse direction failure occurrence/ Display range: [Yes/No]	[Yes]: Malfunction [No]: Normal	-
[Passenger seat sensor failure5 Now]	Current status of P-seat both pulse stopping failure occurrence/ Display range: [Yes/No]	[Yes]: Malfunction [No]: Normal	-

Item name	Description/display range	Normal value	Remarks
[Passenger seat sensor failure6 Now]	Current status of P-seat opening direction dead band deviation failure occurrence/ Display range: [Yes/No]	[Yes]: Malfunction [No]: Normal	-
[Passenger seat initial failure Now]	Current status of occurrence of P-seat glass position and window slide not recorded/ Display range: [Yes/No]	[Yes]: Malfunction [No]: Normal	-
[Passenger seat ECU failure Now]	Current status of P-seat EEPROM read failure occurrence/ Display range: [Yes/No]	[Yes]: Malfunction [No]: Normal	-

SSM4 screen: [Each System] →[Body Control] →[Data monitor]

Item name	Description/display range	Normal value	Remarks
[Ignition]	IG signal status/ Display range: [ON-OFF]	OFF: IG OFF ON: IG ON	-

(2) Active test

(a)Use the SSM4 to conduct an active test and determine functionality and narrow down the defective part.

SSM4 screen: [Each System] →[Power Window] →[Active Test]

Item name	Drive
[Power Window Motor Driver side]	[UP] / [DOWN] / [Stop]
[Passenger side]	[UP] / [DOWN] / [Stop]

Failsafe list

1. Power window fail safe

NOTE:

If any malfunction occurs on the pulse sensor in the power window regulator motor ASSY LH (driver's seat) and the power window regulator motor ASSY RH (passenger's seat), the fail safe function is triggered.

(1) If any malfunction occurs on the pulse sensor for the auto-reverse function trigger, or any irregularity exists on window position or learned value, the following power window operations are prohibited.

Power window regulator master switch ASSY

Power window operation	Conditions		
	IG ON	IG OFF Under permission of after-key-OFF operation	IG OFF Under prohibition of after-key-OFF operation
Manual UP (operating switch of own seat)	×	×	-
Manual DOWN (operating switch of own seat)	0	×	-
During AUTO UP HOLD (operating switch of own seat)	0*	×	-
AUTO UP (operating switch of own seat)	×	×	-
AUTO DOWN (operating switch of own seat)	×	×	-
Manual UP (remote operation)	×	×	-
Manual DOWN (remote operation)	×	×	-
During AUTO UP HOLD (remote operation)	×	×	-
AUTO UP (remote operation)	×	×	-
AUTO DOWN (remote operation)	×	×	-

Power window regulator switch ASSY

Power window operation	Conditions		
	IG ON	IG OFF Under permission of after-key-OFF operation	IG OFF Under prohibition of after-key-OFF operation
Manual UP (operating switch of own seat)	×	×	-
Manual DOWN (operating switch of own seat)	0	×	-
During AUTO UP HOLD (operating switch of own seat)	0*	×	-
AUTO UP (operating switch of own seat)	×	×	-
AUTO DOWN (operating switch of own seat)	×	×	-

NOTE:

0: Operation permitted

×: Operation prohibited

*: Operating manual UP with AUTO UP HOLD (auto-reverse function is not activated)

If pulse sensor is normal, fully close the window with manual operation (AUTO UP HOLD), and keep this operation for 1 second or more. This will cancel the fail safe and enable the AUTO operation.

(a)SW knob indicator control

NOTE:

In normal operation (the fail safe is not active), knob indicator illuminates as shown in the diagram.

1. Driver's seat

Output pattern:

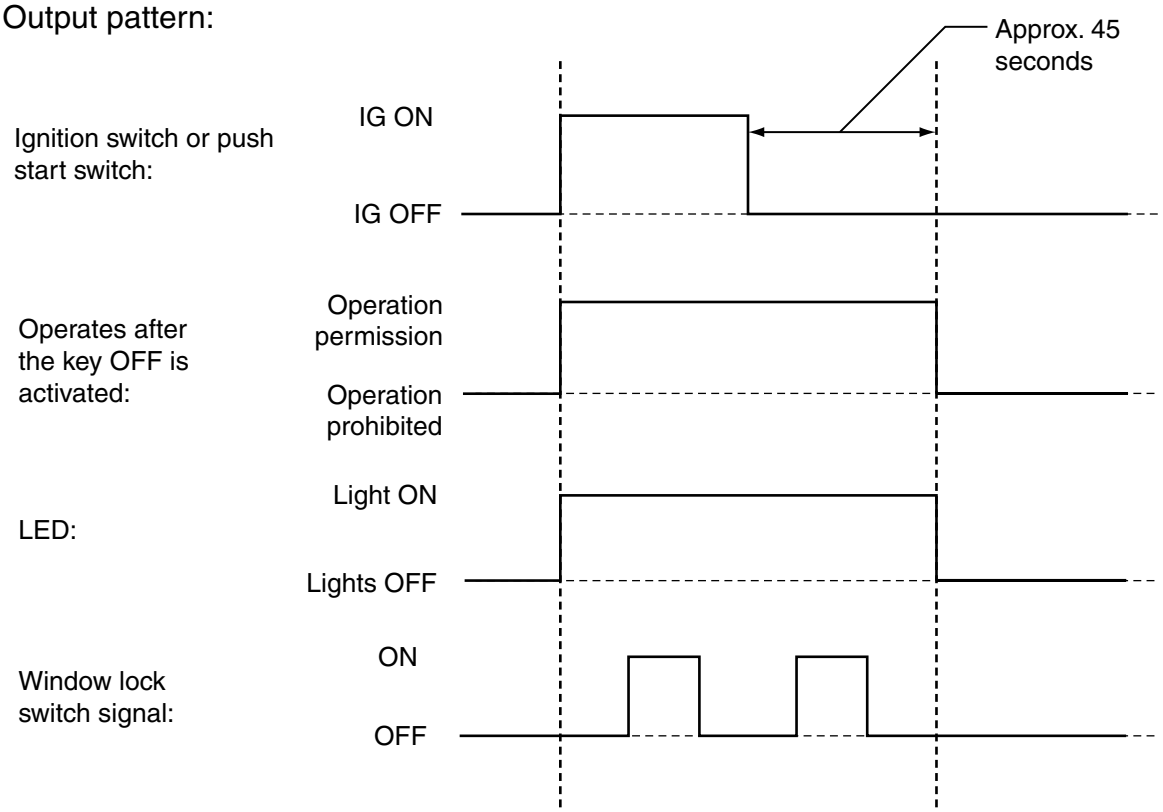

2. Passenger's seat

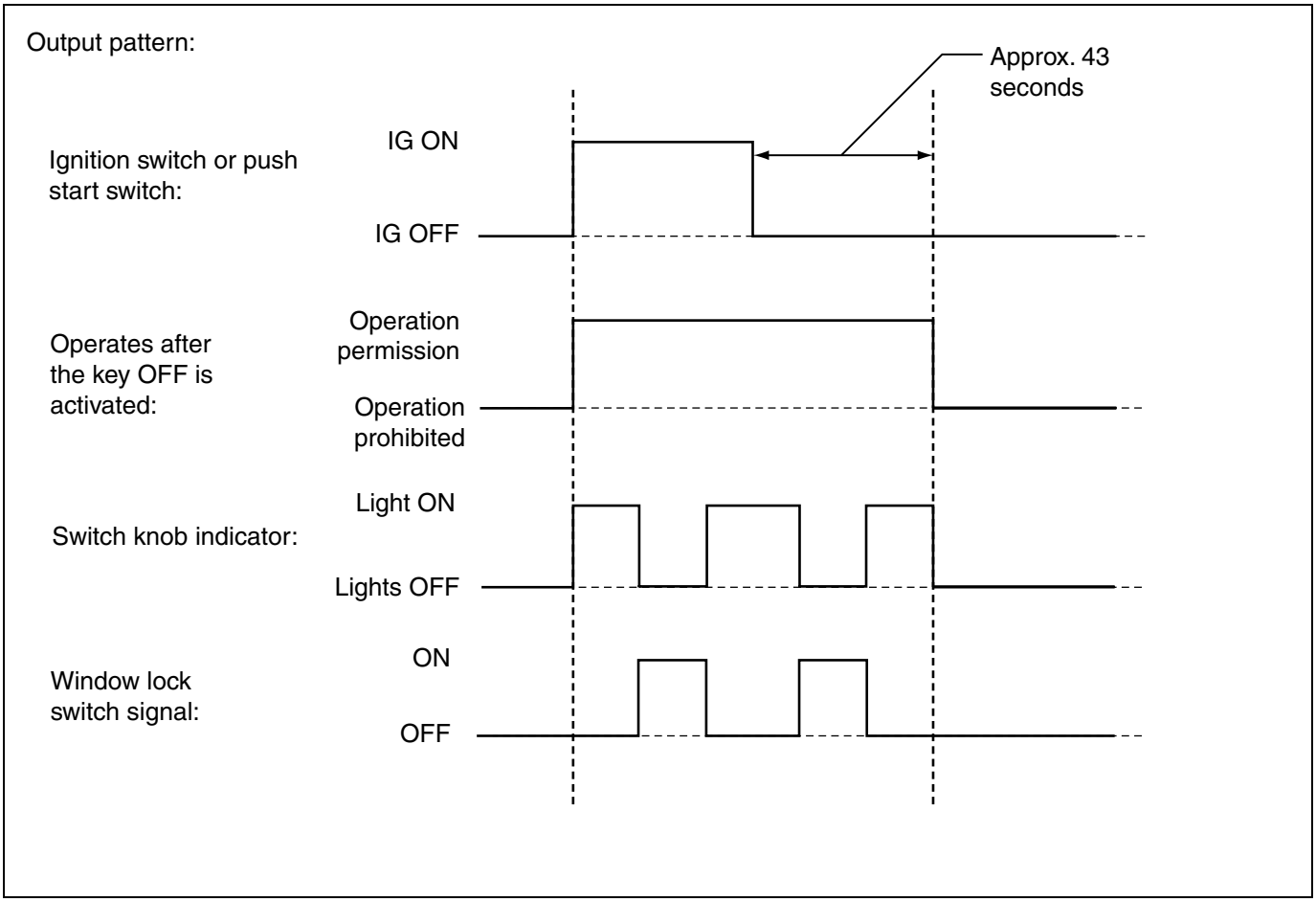

(2) Initial failure

NOTE:

If window position or initialization finished status is failed to be read normally from the EEPROM, the following power window operations are prohibited.

Power window regulator master switch ASSY

Power window operation	Conditions		
	IG ON	IG OFF Under permission of after-key-OFF operation	IG OFF Under prohibition of after-key-OFF operation
Manual UP (operating switch of own seat)	×	×	-
Manual DOWN (operating switch of own seat)	0	×	-
During AUTO UP HOLD (operating switch of own seat)	0*	×	-
AUTO UP (operating switch of own seat)	×	×	-
AUTO DOWN (operating switch of own seat)	×	×	-
Manual UP (remote operation)	×	×	-
Manual DOWN (remote operation)	×	×	-
During AUTO UP HOLD (remote operation)	×	×	-
AUTO UP (remote operation)	×	×	-
AUTO DOWN (remote operation)	×	×	-

Power window regulator switch ASSY

Power window operation	Conditions		
	IG ON	IG OFF Under permission of after-key-OFF operation	IG OFF Under prohibition of after-key-OFF operation
Manual UP (operating switch of own seat)	×	×	-
Manual DOWN (operating switch of own seat)	0	×	-

Power window operation	Conditions		
	IG ON	IG OFF Under permission of after-key-OFF operation	IG OFF Under prohibition of after-key-OFF operation
During AUTO UP HOLD (operating switch of own seat)	0*	×	-
AUTO UP (operating switch of own seat)	×	×	-
AUTO DOWN (operating switch of own seat)	×	×	-

NOTE:
0: Operation permitted
×: Operation prohibited
*: Operating manual UP with AUTO UP HOLD (auto-reverse function is not activated)
(a)SW knob indicator control
NOTE:
During the initialization, if fail safe mode is activated because window position or initialization finished status is failed to be read normally from the EEPROM, SW knob indicator illuminates as shown in the diagram.
1. Driver's seat:

Output pattern:

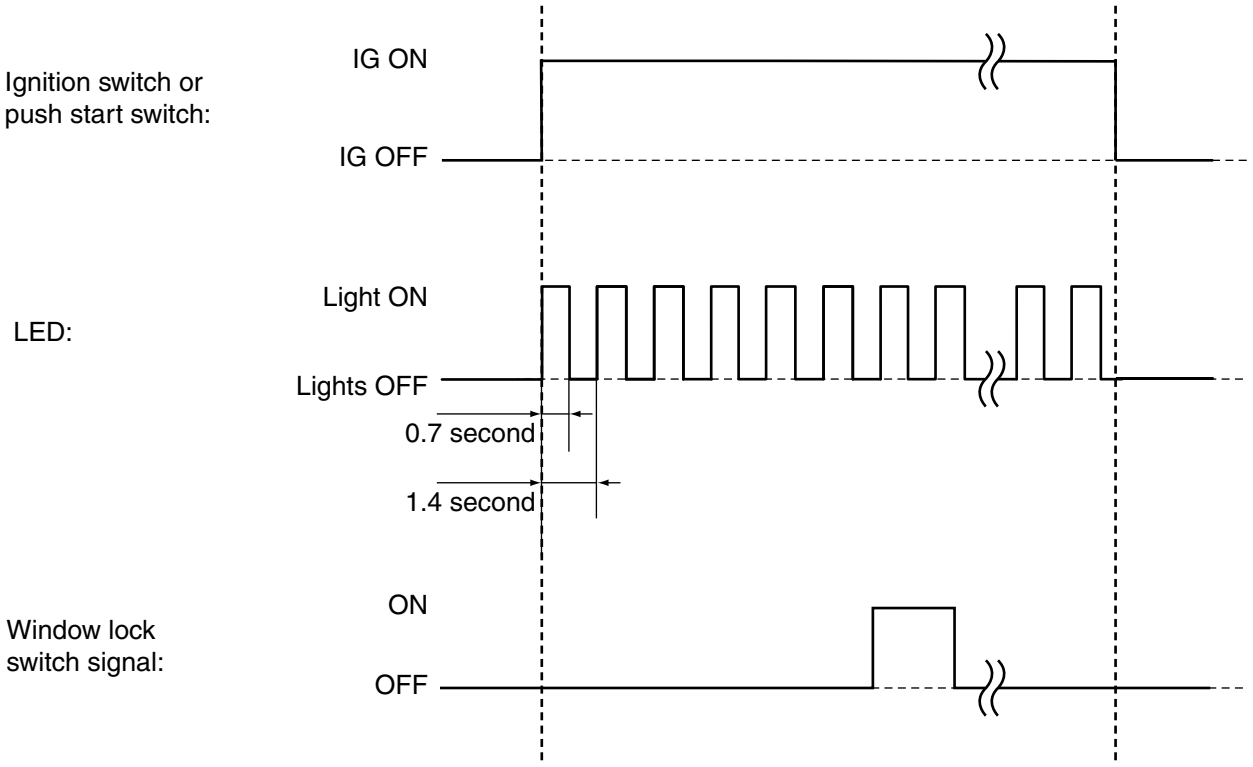

NOTE:
When LIN communication is failed, the indicator blinks in a pattern of 1.4 seconds ON/1.4 seconds OFF.
When LIN failure and other failure occurs simultaneously, the pattern of 0.7 seconds ON/0.7 seconds OFF is performed.
2. Passenger's seat

Output pattern:

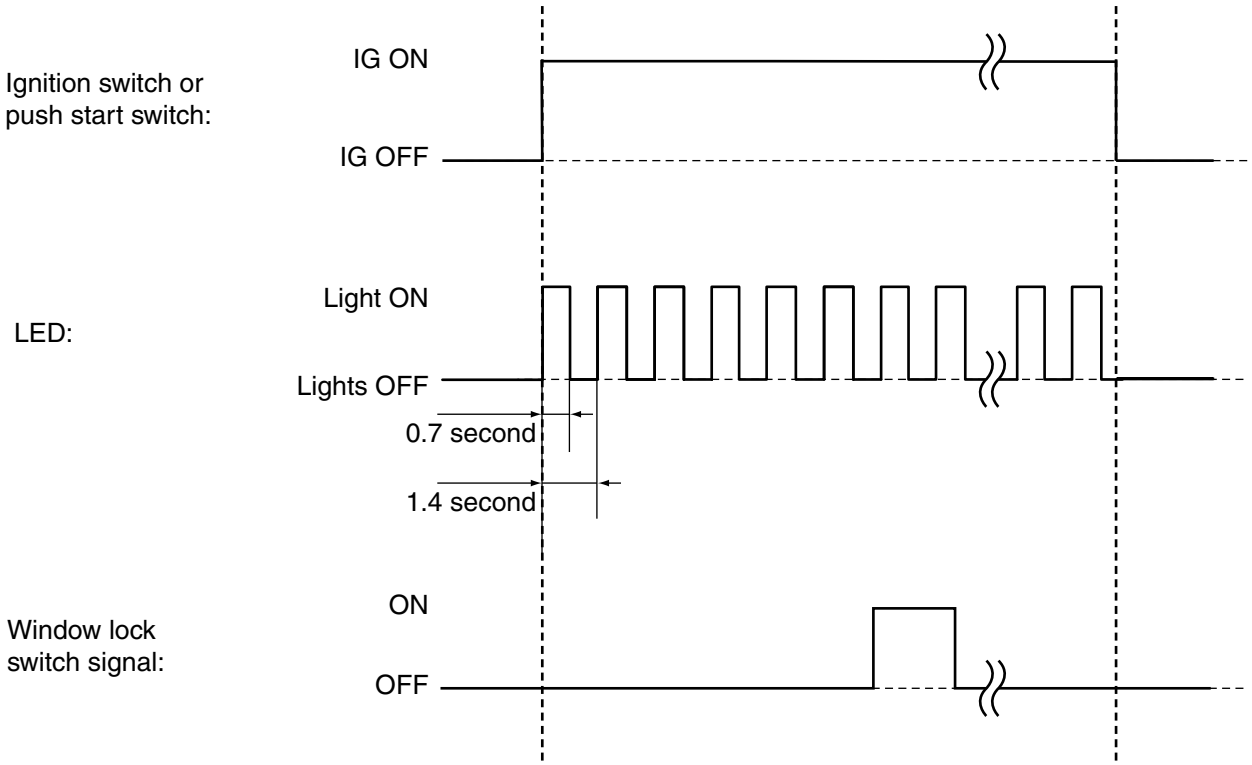

(3) If LIN communication has any abnormality (communication fail), the power window operates as follows.

Power window regulator master switch ASSY

Power window operation	IG ON
Manual UP	0*
Manual DOWN	0
During AUTO UP HOLD	0*
AUTO UP	0*
AUTO DOWN	0

WS

Power window regulator switch ASSY

Power window operation	IG ON
Manual UP	0*
Manual DOWN	0
During AUTO UP HOLD	0*
AUTO UP	0*
AUTO DOWN	0

NOTE:
0: Operation permitted
×: Operation prohibited
*: With auto-reverse function enabled
Does not operate remotely.

(4) If LIN communication abnormality and pulse irregularity are detected simultaneously, the power window operates as follows.

Power window regulator master switch ASSY

Power window operation	Always
Manual UP	×
Manual DOWN	0
During AUTO UP HOLD	0*1

Power window operation	Always
AUTO UP	×
AUTO DOWN	×

Power window regulator switch ASSY

Power window operation	Always
Manual UP	×
Manual DOWN	0
During AUTO UP HOLD	0*1
AUTO UP	×
AUTO DOWN	×

NOTE:
0: Operation permitted
×: Operation prohibited
*1: Operating manual UP with AUTO UP HOLD (auto-reverse function is not activated)
Own seat's SW operation: Because LIN communication is in failure, the status of the IG signal is unknown, therefore UP operation without auto-reverse function control is prohibited.
Remote SW operation: Inoperable because LIN communication is failed.

(5) If LIN communication abnormality and opening direction dead band deviation or LIN communication and initial failure are detected simultaneously, the power window operates as follows.

Power window regulator master switch ASSY

Power window operation	Always
Manual UP	×
Manual DOWN	0
During AUTO UP HOLD	0*1
AUTO UP	×
AUTO DOWN	×

NOTE:
0: Operation permitted
×: Operation prohibited
*1: Operating manual UP with AUTO UP HOLD (auto-reverse function is not activated)
Remote control switch operation: Inoperable because LIN communication is failed.

DTC	B2311	Driver's seat pulse failure abnormal detection

DTC	B2314	Passenger's seat pulse failure abnormal detection

WS

Circuit description
Operating the power window regulator master switch ASSY and the power window regulator switch ASSY drives the power window regulator motor ASSY LH (driver's seat) and power window regulator motor ASSY RH (passenger's seat). The power window regulator motor ASSY LH (driver's seat) and power window regulator motor ASSY RH (passenger's seat) have motor function and regulator function.
B2311 or B2314 is generated when any failure is detected inside the power window regulator motor ASSY LH (driver's seat), the power window regulator motor ASSY RH (passenger's seat), the power window regulator master switch ASSY, or power window regulator switch ASSY, as well as when open/short circuit in the wire harness and/or improper connection of connector exists between the power window regulator switch and the power window regulator motor.
CAUTION:
- When replacing the power window regulator motor ASSY with a new one or reusing its motor, perform the initialization of the power window system. (Refer to WS - 5)
- Before performing the troubleshooting, check the fuse of this circuit.

DTC No.	Detecting conditions	Inspection parts
B2311	• Power window regulator motor ASSY LH (driver's seat) pulse sensor malfunction • Power window regulator master switch ASSY input circuit malfunction • Power window regulator ASSY (driver's seat) malfunction • Open and/or short circuit in the harness between the power window regulator motor ASSY LH (driver's seat) and the power window regulator master switch ASSY	• Power window regulator motor ASSY LH (driver's seat) • Power window regulator master switch ASSY • Power window regulator (driver's seat) • Wire harness and connector
B2314	• Power window regulator motor ASSY RH (passenger's seat) pulse sensor malfunction • Power window regulator switch ASSY input circuit malfunction • Power window regulator ASSY (passenger's seat) malfunction • Open and/or short circuit in the harness between the power window regulator motor ASSY RH (passenger's seat) and the power window regulator switch ASSY	• Power window regulator motor ASSY RH (passenger's seat) • Power window regulator switch ASSY • Power window regulator (passenger's seat) • Wire harness and connector

Circuit figure

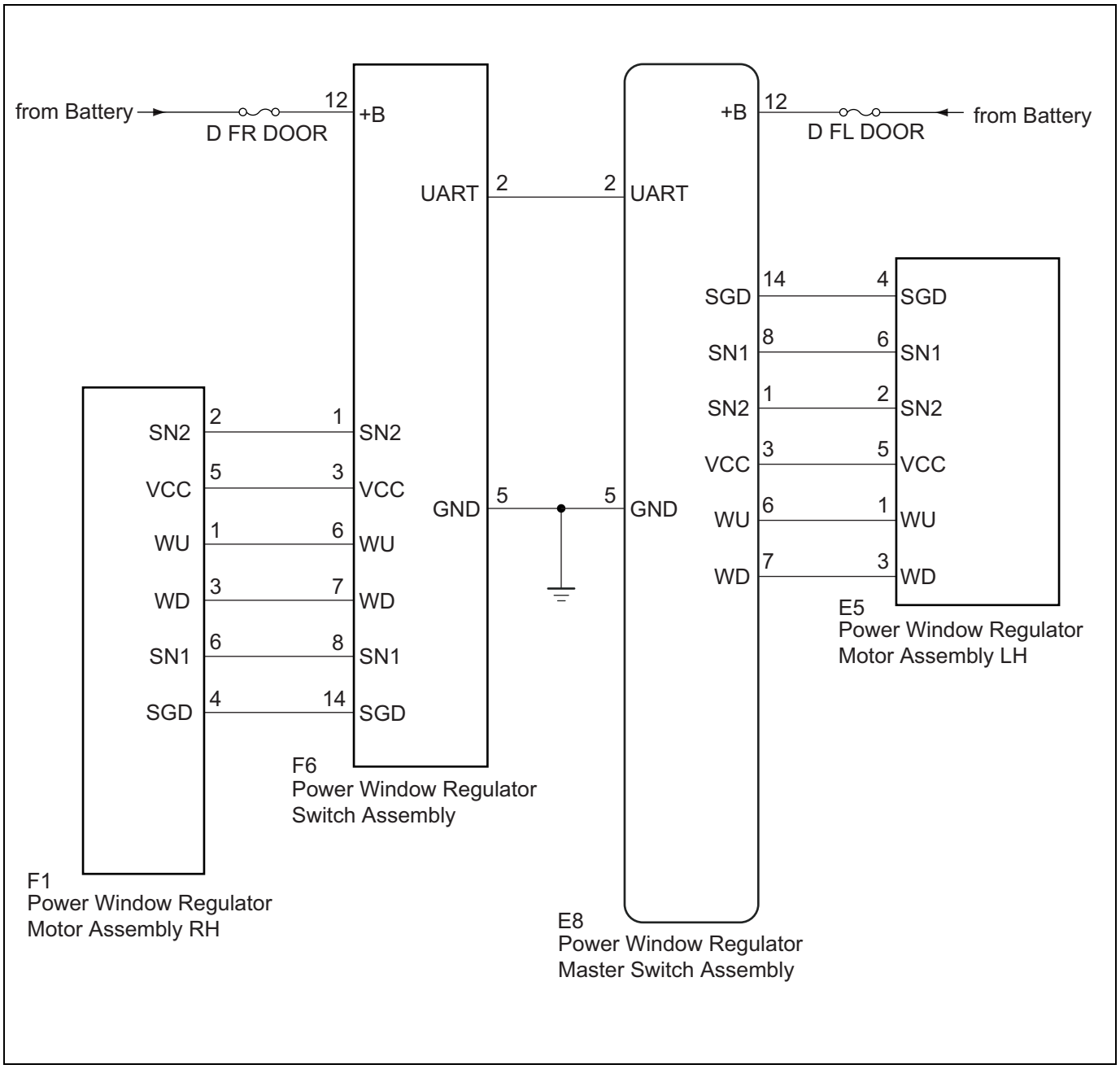

Inspection steps

1	DTC check

(1) Using SSM4, check the output diagnostic code. (Refer to WS - 12)

Result

Result	Go to
DTC output B2311.	A
DTC output B2314.	B

B → Go to Step 6.

A

2	SSM4 data monitor check

(1) Using SSM4, check the status of the power window system. (Refer to WS - 18)

SSM4 screen: [Each System] →[Power Window] →[Data monitor]

Item name	Description/display range	Normal value	Remarks
[Drivers seat sensor failure1 Now]	Current status of D-seat sensor power failure occurrence/Display range: Yes/No	[Yes]: Malfunction[No]: Normal	
[Drivers seat sensor failure2 Now]	Current status of D-seat PLS1 failure occurrence/Display range: Yes/No	[Yes]: Malfunction[No]: Normal	
[Drivers seat sensor failure3 Now]	Current status of D-seat PLS2 failure occurrence/Display range: Yes/No	[Yes]: Malfunction[No]: Normal	
[Drivers seat sensor failure4 Now]	Current status of D-seat pulse direction failure occurrence/Display range: Yes/No	[Yes]: Malfunction[No]: Normal	
[Drivers seat sensor failure5 Now]	Current status of D-seat both pulse stopping failure occurrence/Display range: Yes/No	[Yes]: Malfunction[No]: Normal	
[Drivers seat sensor failure6 Now]	Current status of D-seat opening direction dead band deviation failure occurrence/Display range: Yes/No	[Yes]: Malfunction[No]: Normal	

Criteria: Failure occurrence status (Yes/No)

No → Replacement of the power window regulator master switch ASSY (Refer to WS - 52)

Yes

3	Inspection of the wire harness and connector (power window regulator master switch ASSY - power window regulator motor ASSY LH (driver's seat))

(1) Disconnect the connector E8 of power window regulator master switch ASSY.
(2) Disconnect the connector E5 of power window regulator motor ASSY LH (driver's seat).
(3) Check the resistance between terminals by following the results shown in the data monitor.
Resistance (open circuit check)

[Drivers seat sensor failure1 Now] is faulty.

Inspection terminals (Terminal symbol)	Inspection conditions	Standard value
E8-3 (VCC) - E5-5(VCC)	Always	Less than 1 Ω
E8-14 (SGD) - E5-4(SGD)	Always	Less than 1 Ω

[Drivers seat sensor failure2 Now] is faulty.

Inspection terminals (Terminal symbol)	Inspection conditions	Standard value
E8-8 (SN1) - E5-6(SN1)	Always	Less than 1 Ω

[Drivers seat sensor failure3 Now] is faulty.

Inspection terminals (Terminal symbol)	Inspection conditions	Standard value
E8-1 (SN2) - E5-2 (SN2)	Always	Less than 1 Ω

[Drivers seat sensor failure4 Now] is faulty.

Inspection terminals (Terminal symbol)	Inspection conditions	Standard value
E8-8 (SN1) - E5-6(SN1)	Always	Less than 1 Ω
E8-1 (SN2) - E5-2 (SN2)	Always	Less than 1 Ω

[Drivers seat sensor failure5 Now] is faulty.

Inspection terminals (Terminal symbol)	Inspection conditions	Standard value
E8-3 (VCC) - E5-5(VCC)	Always	Less than 1 Ω
E8-8 (SN1) - E5-6(SN1)	Always	Less than 1 Ω
E8-1 (SN2) - E5-2 (SN2)	Always	Less than 1 Ω
E8-14 (SGD) - E5-4(SGD)	Always	Less than 1 Ω

[Drivers seat sensor failure6 Now] is faulty.

Inspection terminals (Terminal symbol)	Inspection conditions	Standard value
E8-3 (VCC) - E5-5(VCC)	Always	Less than 1 Ω
E8-8 (SN1) - E5-6(SN1)	Always	Less than 1 Ω
E8-1 (SN2) - E5-2 (SN2)	Always	Less than 1 Ω
E8-14 (SGD) - E5-4(SGD)	Always	Less than 1 Ω

NG → Repair or replacement of wiring harness or connector

OK

4	Unit inspection of power window regulator motor ASSY LH (driver's seat)

(1) Remove the power window regulator motor ASSY LH (driver's seat). (Refer to WS - 58)
(2) Perform unit inspection of the power window regulator motor ASSY LH (driver's seat). (Refer to WS - 59)

NG → Replacement of the power window regulator motor ASSY LH (driver's seat) (Refer to WS - 58)

OK

5	Replacement of the power window regulator master switch ASSY

(1) Replace with the new or normal power window regulator master switch ASSY, and verify normal operation. (Refer to WS - 52)

Result

Item	Go to
Motor does not operate.	A
Motor operates.	B

B → Complete

A

Replacement of the power window regulator (driver's seat) (Refer to WS - 58)

6	SSM4 data monitor check

(1) Using SSM4, check the status of the power window system. (Refer to WS - 18)

SSM4 screen: [Each System] →[Power Window] →[Data monitor]

Item name	Description/display range	Normal value	Remarks
[Passenger seat sensor failure1 Now]	Current status of P-seat sensor power failure occurrence/Display range: Yes/No	[Yes]: Malfunction[No]: Normal	
[Passenger seat sensor failure2 Now]	Current status of P-seat PLS1 failure occurrence/Display range: Yes/No	[Yes]: Malfunction[No]: Normal	
[Passenger seat sensor failure3 Now]	Current status of P-seat PLS2 failure occurrence/Display range: Yes/No	[Yes]: Malfunction[No]: Normal	
[Passenger seat sensor failure4 Now]	Current status of P-seat pulse direction failure occurrence/Display range: Yes/No	[Yes]: Malfunction[No]: Normal	
[Passenger seat sensor failure5 Now]	Current status of P-seat both pulse stopping failure occurrence/Display range: Yes/No	[Yes]: Malfunction[No]: Normal	
[Passenger seat sensor failure6 Now]	Current status of P-seat opening direction dead band deviation failure occurrence/Display range: Yes/No	[Yes]: Malfunction[No]: Normal	

Criteria: Failure occurrence status (Yes/No)

No → Replacement of the power window regulator master switch ASSY (Refer to WS - 52)

Yes

7	Inspection of the wire harness and connector (power window regulator switch ASSY - power window regulator motor ASSY RH (passenger's seat))

(1) Disconnect the connector F6 of power window regulator switch ASSY.
(2) Disconnect the connector F1 of power window regulator motor ASSY RH (passenger's seat).
(3) Check the resistance between terminals by following the results shown in the data monitor.

Resistance (open circuit check)

[Passenger seat sensor failure1 Now] is faulty.

Inspection terminals (Terminal symbol)	Inspection conditions	Standard value
F6-3 (VCC) - F1-5 (VCC)	Always	Less than 1 Ω
F6-14 (SGD) - F1-4 (SGD)	Always	Less than 1 Ω

[Passenger seat sensor failure2 Now] is faulty.

Inspection terminals (Terminal symbol)	Inspection conditions	Standard value
F6-8 (SN1) - F1-6 (SN1)	Always	Less than 1 Ω

[Passenger seat sensor failure3 Now] is faulty.

Inspection terminals (Terminal symbol)	Inspection conditions	Standard value
F6-1 (SN2) - F1-2 (SN2)	Always	Less than 1 Ω

[Passenger seat sensor failure4 Now] is faulty.

Inspection terminals (Terminal symbol)	Inspection conditions	Standard value
F6-8 (SN1) - F1-6 (SN1)	Always	Less than 1 Ω
F6-1 (SN2) - F1-2 (SN2)	Always	Less than 1 Ω

[Passenger seat sensor failure5 Now] is faulty.

Inspection terminals (Terminal symbol)	Inspection conditions	Standard value
F6-3 (VCC) - F1-5 (VCC)	Always	Less than 1 Ω
F6-8 (SN1) - F1-6 (SN1)	Always	Less than 1 Ω
F6-1 (SN2) - F1-2 (SN2)	Always	Less than 1 Ω
F6-14 (SGD) - F1-4 (SGD)	Always	Less than 1 Ω

[Passenger seat sensor failure6 Now] is faulty.

Inspection terminals (Terminal symbol)	Inspection conditions	Standard value
F6-3 (VCC) - F1-5 (VCC)	Always	Less than 1 Ω
F6-8 (SN1) - F1-6 (SN1)	Always	Less than 1 Ω
F6-1 (SN2) - F1-2 (SN2)	Always	Less than 1 Ω
F6-14 (SGD) - F1-4 (SGD)	Always	Less than 1 Ω

NG → Repair or replacement of wiring harness or connector

OK

8	Unit inspection of power window regulator motor ASSY RH (passenger's seat)

(1) Remove the power window regulator motor ASSY RH (passenger's seat). (Refer to WS - 58)
(2) Perform unit inspection of the power window regulator motor ASSY RH (passenger's seat). (Refer to WS - 59)

NG → Replacement of the power window regulator motor ASSY RH (passenger's seat) (Refer to WS - 58)

OK

9	Replacement of the power window regulator switch ASSY

(1) Replace with the new or normal power window regulator switch ASSY, and verify normal operation. (Refer to WS - 54)

Result

Item	Go to
Motor does not operate.	A
Motor operates.	B

B → Complete

A

10	Replacement of the power window regulator switch ASSY

(1) Replace with the new or normal power window regulator switch ASSY, and verify normal operation. (Refer to WS - 52)

Result

Item	Go to
Motor does not operate.	A
Motor operates.	B

B → Complete

A

Replacement of the power window regulator (passenger's seat) (Refer to WS - 58)

DTC	B2312	Driver's seat SW ON stuck

DTC	B2315	Passenger's seat SW ON stuck

Circuit description

Operating the power window regulator master switch ASSY and the power window regulator switch ASSY drives the power window regulator motor ASSY LH (driver's seat) and power window regulator motor ASSY RH (passenger's seat). The power window regulator motor ASSY LH (driver's seat) and power window regulator motor ASSY RH (passenger's seat) have motor function and regulator function.

B2312 and B2315 is generated when ECM determines that the power window regulator master switch ASSY or power window regulator switch ASSY is stuck continuously.

CAUTION:

- When replacing the power window regulator motor ASSY with a new one or reusing its motor, perform the initialization of the power window system. (Refer to WS - 5)
- After replacing door glass and/or weather strip, AUTO UP operation sometimes activates auto-reverse function. In this case, the door glass is fully closed by performing the procedure in the following order (*3). AUTO UP HOLD →(the auto-reverse function (glass reverse operation)) →(*1) →AUTO UP HOLD →(the auto-reverse function (glass reverse operation)) →AUTO UP HOLD (*2).
  *1: If DOWN operation, IG OFF & timer operation OFF, and/or index operation is executed between auto-reverse function and AUTO UP HOLD, return to the beginning of the procedure.
  *2: The upper end position of the glass is relearned by this operation (AUTO UP HOLD). (Refer to WS - 5)
  *3: The failure of the door glass or regulator may prevent full closing of the door glass.

DTC No.	Detecting conditions	Inspection parts
B2312	Power window regulator master switch ASSY is stuck (When the switch-on status has been detected for approx. 20 seconds.).	Power window regulator master switch ASSY
B2315	Power window regulator switch ASSY is stuck (When the switch-on status has been detected for approx. 20 seconds.).	• Power window regulator master switch ASSY • Power window regulator switch ASSY • Wiring harness or connector

Circuit figure

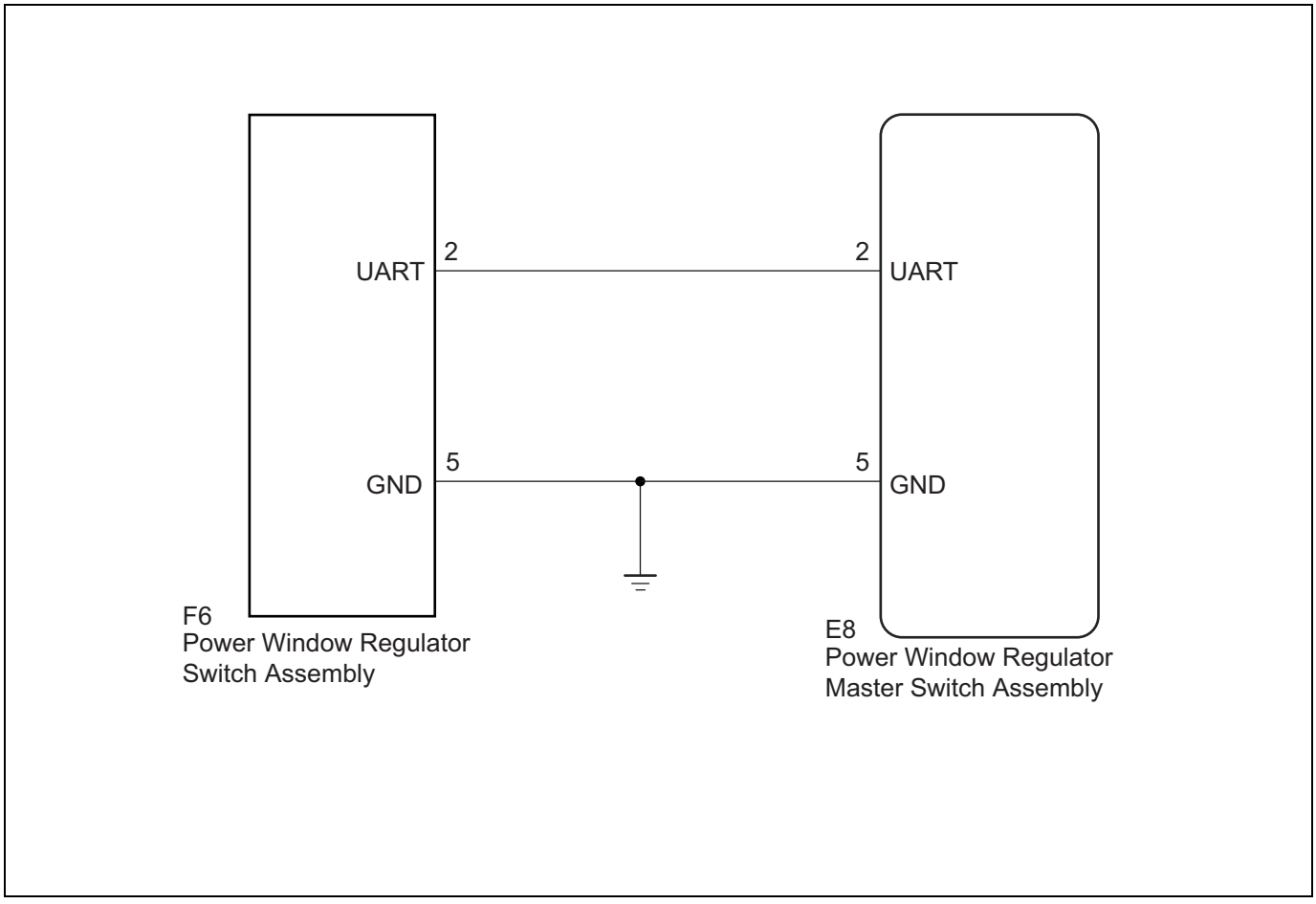

Inspection steps

1	Checking diagnostic codes

(1) Check DTC using SSM4. (Refer to WS - 12)

Result

Result	Go to
DTC output B2312.	A
DTC output B2315.	B

B → Go to Step 2.

A → Replacement of the power window regulator master switch ASSY (Refer to WS - 52)

2	Reading of SSM4 data

(1) Using the SSM4, follow the display and read the [Data monitor]. (Refer to WS - 18)
Criteria: The normal value on the [Data monitor] is displayed properly.

SSM4 screen: [Each System] →[Power Window] →[Data monitor]

Item name	Description/display range	Normal value	Remarks
[Passenger seat AUTO SW state]	Operation signal of switch AUTO for the passenger's seat/ Display range: ON-OFF	ON: AUTO switch is in operation. OFF: Neutral	-
[Passenger seat MANUAL UP SW state]	Operation signal of switch UP for the passenger's seat/ Display range: ON-OFF	ON: UP switch is in operation. OFF: Neutral	-
[Passenger seat MANUAL DOWN SW state]	Operation signal of switch DOWN for the passenger's seat/ Display range: ON-OFF	ON: DOWN switch is in operation. OFF: Neutral	-

NG → Replacement of the power window regulator switch ASSY (Refer to WS - 54)

OK

WS

3	Inspection of the wire harness and connector (power window regulator master switch ASSY - power window regulator switch ASSY)

(1) Disconnect the connector E8 of power window regulator master switch ASSY.
(2) Disconnect the connector F6 of power window regulator switch ASSY LH.
(3) Measure the resistance between the terminals.

Resistance (open circuit check)

Inspection terminals (Terminal symbol)	Inspection conditions	Standard value
E8-2 (UART) - F6-2 (UART)	Always	Less than 1 Ω

Resistance (short circuit check)

Inspection terminals (Terminal symbol)	Inspection conditions	Standard value
E8-2 (UART) - chassis ground	Always	10 kΩ or more

NG → Repair or replacement of wiring harness or connector

OK

Replacement of the power window regulator master switch ASSY (Refer to WS - 54)

DTC	B2313	Driver's seat glass position, window slide characteristic data not recorded status detection

DTC	B2316	Passenger's seat glass position, window slide characteristic data not recorded status detection

Circuit description

Operating the power window regulator master switch ASSY and the power window regulator switch ASSY drives the power window regulator motor ASSY LH (driver's seat) and power window regulator motor ASSY RH (passenger's seat). The power window regulator motor ASSY LH (driver's seat) and power window regulator motor ASSY RH (passenger's seat) have motor function and regulator function.

B2313 or B2316 is generated when the power window regulator motor ASSY LH (driver's seat) or the power window regulator motor ASSY RH (passenger's seat) has not been initialized.

DTC No.	Detecting conditions	Inspection parts
B2313	Power window regulator master switch ASSY LH (driver's seat) has not been initialized.	• Power window regulator master switch ASSY LH (driver's seat) • Power window regulator master switch ASSY LH (driver's seat) initialization malfunction
B2316	Power window regulator switch ASSY RH (passenger's seat) has not been initialized.	• Power window regulator switch ASSY RH (passenger's seat) • Power window regulator switch ASSY RH (passenger's seat) initialization malfunction

Inspection steps

1	DTC check

(1) Using SSM4 and following the screen, check the diagnostic codes. (Refer to WS - 12)

Criteria: Other DTCs (DTC2311, 2312, 2314, 2315) are not detected.

NG → Perform diagnosis depending on other detected DTCs.

OK

2	Power window system (initialization)

(1) Perform the initialization of the power window regulator motor ASSY LH (driver's seat) and power window regulator motor ASSY RH (passenger's seat). (Refer to WS - 5)

Next

3	Clear diagnostic code

(1) Using SSM4 and following the screen, clear the diagnostic codes. (Refer to WS - 12)

Next

4	DTC check

(1) Using SSM4 and following the screen, check the diagnostic codes. (Refer to WS - 12)

Result

Result	Go to
No DTC output	A
DTC B2313 output	B
DTC B2316 output	C

B → Replacement of the power window regulator motor ASSY LH (driver's seat) (Refer to WS - 58)

C → Replacement of the power window regulator motor ASSY RH (passenger's seat) (Refer to WS - 58)

A

Complete (due to failed initialization)

Cannot operate the window from driver's seat regulator switch

Circuit description

When IG is ON, operating the power window regulator master switch ASSY drives the power window regulator motor ASSY LH (driver's seat). The power window regulator motor ASSY LH (driver's seat) has motor function and regulator function.

WS

CAUTION:

- When replacing the power window regulator motor ASSY with a new one or reusing its motor, perform the initialization of the power window system. (Refer to WS - 5)
- Before performing the troubleshooting, check the fuse of this circuit.

Circuit figure

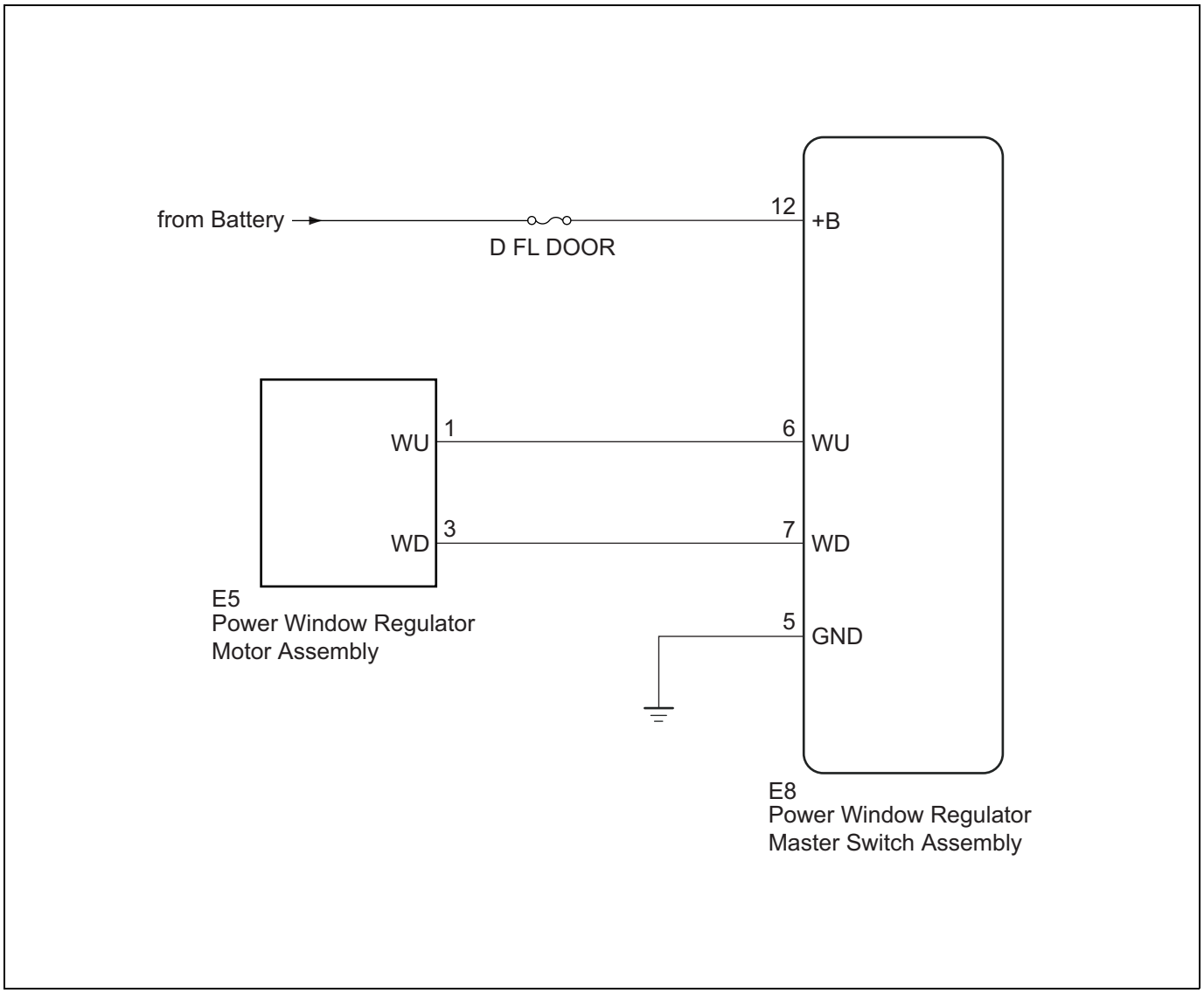

Inspection steps

WS

1	Implementation of SSM4 active test

(1) Using SSM4, perform an [Active Test] by following the display. (Refer to WS - 18)

Criteria: The [Active Test] can be performed properly.

SSM4 screen: [Each System] →[Power Window] →[Active Test]

Item name	Drive
[Power Window Motor Driver side]	UP/DOWN

Result

Item	Go to
NG	A
OK	B

B	Replacement of the power window regulator master switch ASSY (driver's seat) (Refer to WS - 52)

A

2	Inspection of the wire harness and connector (power window regulator master switch ASSY - battery and chassis ground)

(1) Disconnect the connector E8 of power window regulator master switch ASSY.

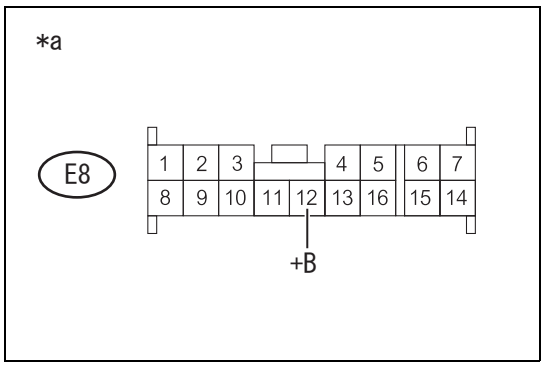

(2) Measure the voltage between the terminals.
Voltage

Inspection terminals (Terminal symbol)	Inspection conditions	Standard value
E8-12 (+B) - chassis ground	Always	11 to 14 V

(3) Measure the resistance between the terminals.
Resistance

Inspection terminals (Terminal symbol)	Inspection conditions	Standard value
E8-5 (GND) - chassis ground	Always	Less than 1 Ω

Captions in illustration

*a	Front side of vehicle wiring harness connector (connector to the power window regulator master switch ASSY)

NG → Repair or replacement of wiring harness or connector

OK

3	Inspection of the wire harness and connector (power window regulator master switch ASSY - power window regulator motor ASSY LH (driver's seat))

(1) Disconnect the connector E8 of power window regulator master switch ASSY.
(2) Disconnect the connector E5 of the power window regulator motor ASSY LH (driver's seat).
(3) Measure the resistance between the terminals.
Resistance (open circuit check)

Inspection terminals (Terminal symbol)	Inspection conditions	Standard value
E8-6 (WU) - E5-1 (WU)	Always	Less than 1 Ω
E8-7 (WD) - E5-3 (WD)	Always	Less than 1 Ω

Resistance (short circuit check)

Inspection terminals (Terminal symbol)	Inspection conditions	Standard value
E8-6 (WU) - chassis ground	Always	10 kΩ or more
E8-7 (WD) - chassis ground	Always	10 kΩ or more

NG → Repair or replacement of wiring harness or connector

OK

4	Replacement of the power window regulator master switch ASSY

(1) Replace with the new or normal power window regulator master switch ASSY, and verify normal operation. (Refer to PD - 25)

Result

Item	Go to
Motor operates.	A
Motor does not operate.	B

B → Replacement of the power window regulator motor ASSY RH (Refer to WS - 58)

A

Complete (switch malfunction)

Cannot operate the window from passenger's seat regulator switch

Circuit description

When IG is ON, and power window regulator switch ASSY (passenger's seat) is operated, the power window regulator motor ASSY RH (passenger's seat) is driven. The power window regulator motor ASSY RH (passenger's seat) has motor function and regulator function.

CAUTION:

- When replacing the power window regulator motor ASSY with a new one or reusing its motor, perform the initialization of the power window system. (Refer to WS - 5)
- Before performing the troubleshooting, check the fuse of this circuit.

Circuit figure

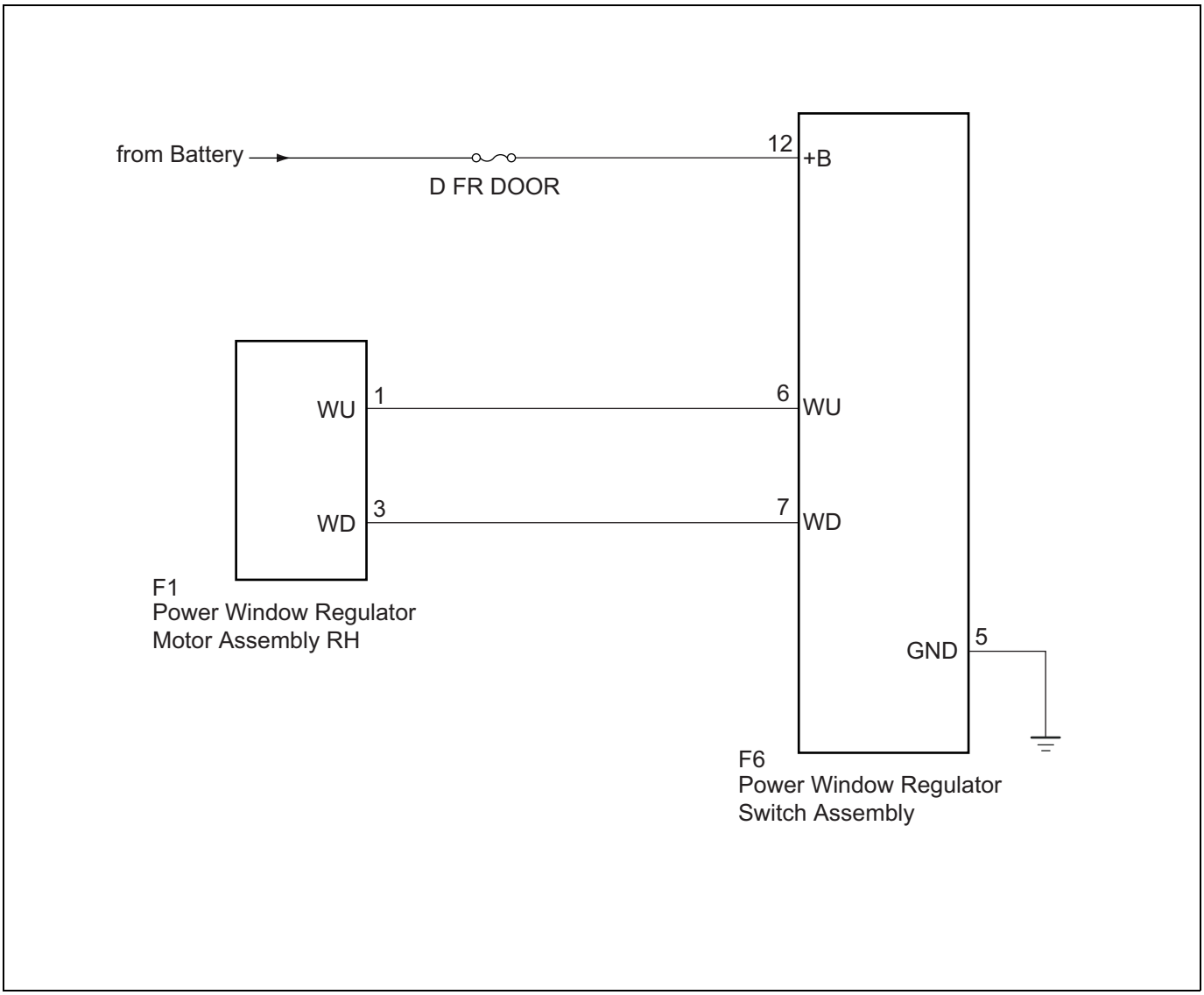

WS

Inspection steps

1	Implementation of SSM4 active test

(1) Using SSM4, perform an [Active Test] by following the display. (Refer to WS - 18)
Criteria: The [Active Test] can be performed properly.

SSM4 screen: [Each System] →[Power Window] →[Active Test]

Item name	Drive
[Power Window Motor Driver side]	UP/DOWN

Result

Item	Go to
NG	A
OK	B

B	Replacement of the power window regulator switch ASSY (Refer to WS - 54)

A

2	Inspection of the wire harness and connector (power window regulator switch ASSY - battery and chassis ground)

(1) Disconnect the connector F6 of power window regulator switch ASSY (passenger's seat).

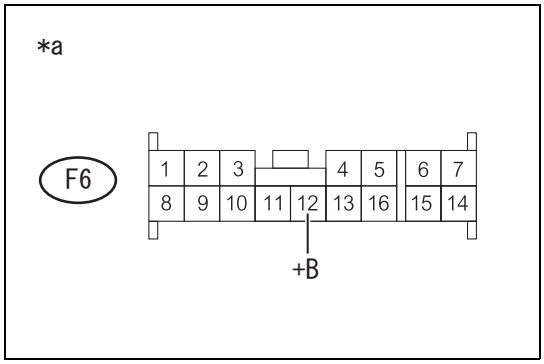

(2) Measure the voltage between the terminals.

Voltage

Inspection terminals (Terminal symbol)	Inspection conditions	Standard value
F6-12 (+B) - chassis ground	Always	11 to 14 V

(3) Measure the resistance between the terminals.

Resistance

Inspection terminals (Terminal symbol)	Inspection conditions	Standard value
F6-5 (GND) - chassis ground	Always	Less than 1 Ω

Captions in illustration

*a	Front side of vehicle wiring harness connector (connector to the power window regulator switch ASSY)

NG → Repair or replacement of wiring harness or connector

OK

3	Inspection of the wire harness and connector (power window regulator switch ASSY - power window regulator motor ASSY RH (passenger's seat))

(1) Disconnect the connector F6 of power window regulator switch ASSY (passenger's seat).
(2) Disconnect the connector F1 of power window regulator motor ASSY RH (passenger's seat).
(3) Measure the resistance between the terminals.

Resistance (open circuit check)

Inspection terminals (Terminal symbol)	Inspection conditions	Standard value
F6-6 (WU) - F1-1 (WU)	Always	Less than 1 Ω
F6-7 (WD) - F1-3 (WD)	Always	Less than 1 Ω

Resistance (short circuit check)

Inspection terminals (Terminal symbol)	Inspection conditions	Standard value
F6-6 (WU) - chassis ground	Always	10 kΩ or more
F6-7 (WD) - chassis ground	Always	10 kΩ or more

NG → Repair or replacement of wiring harness or connector

OK

4	Replacement of the power window regulator switch ASSY

(1) Replace with the new or normal power window regulator switch ASSY, and verify normal operation. (Refer to WS - 52)

Result

Item	Go to
Motor operates.	A
Motor does not operate.	B

B → Replacement of the power window regulator motor ASSY RH (passenger's seat) (Refer to WS - 58)

A

Complete (failed regulator switch ASSY)

Driver's door glass AUTO UP / DOWN function does not work (manual operation works)

Circuit description

If AUTO does not function, the fail safe may be working. Or, not performing the initialization of the power window regulator master switch ASSY LH (driver's seat) after repair also disables AUTO.

CAUTION:

- When replacing the power window regulator motor ASSY with a new one or reusing its motor, perform the initialization of the power window system. (Refer to WS - 5)
- After replacing door glass and/or weather strip, AUTO UP operation sometimes activates auto-reverse function. In this case, the door glass is fully closed by performing the procedure in the following order (*3). AUTO UP HOLD →(the auto-reverse function (glass reverse operation)) →(*1) →AUTO UP HOLD →(the auto-reverse function (glass reverse operation)) →AUTO UP HOLD (*2).
  - *1: If DOWN operation, IG OFF & timer operation OFF, and/or index operation is executed between auto-reverse function and AUTO UP HOLD, return to the beginning of the procedure.
  - *2: The upper end position of the glass is relearned by this operation (AUTO UP HOLD). (Refer to WS - 5)
  - *3: The failure of the door glass or regulator may prevent full closing of the door glass.

NOTE:

If any malfunction occurs on the pulse sensor in the power window regulator motor ASSY LH (driver's seat), the fail safe function is triggered. When fail safe is active, remote operation from the passenger's seat and AUTO operation are disabled. (During AUTO UP HOLD operation, only manual UP and manual DOWN operations are possible).

WS

Inspection steps

1	Reading of SSM4 data

(1) Using the SSM4, follow the display and read the [Data monitor]. (Refer to WS - 18)

Criteria: The normal value on the [Data monitor] is displayed properly.

SSM4 screen: [Each System] →[Power Window] →[Data monitor]

Item name	Description/display range	Normal value	Remarks
[Drivers seat AUTO SW state]	Operation signal of switch AUTO for the driver's seat/ Display range: OFF - ON	ON: AUTO switch is in operation. OFF: Neutral	-

NG → Go to Step 3.

OK

2	Perform initialization operation.

(1) Initialize the power window regulator master switch ASSY LH (driver's seat). (Refer to WS - 5)
(2) Open and close the power window, and ensure it works properly.
Criteria: It operates properly.

NG → Replacement of the power window regulator motor ASSY LH (driver's seat) (Refer to WS - 58)

OK

Complete (due to failed initialization)

3	Replacement of the power window regulator master switch ASSY

(1) Replace with the new or normal power window regulator master switch ASSY, and verify normal operation. (Refer to WS - 52)

Result

Item	Go to
Motor operates.	A
Motor does not operate.	B

B → Replacement of the power window regulator motor ASSY LH (driver's seat) (Refer to WS - 58)

A

Complete (power window regulator master switch ASSY is failed)

WS

Passenger's door glass AUTO UP / DOWN function does not work (manual operation works)

Circuit description

If AUTO does not function, the fail safe may be working. Or, not performing the initialization of the power window regulator switch ASSY RH (passenger's seat) after repair also disables AUTO.

CAUTION:

- When replacing the power window regulator motor ASSY with a new one or reusing its motor, perform the initialization of the power window system. (Refer to WS - 5)
- After replacing door glass and/or weather strip, AUTO UP operation sometimes activates auto-reverse function. In this case, the door glass is fully closed by performing the procedure in the following order (*3). AUTO UP HOLD →(the auto-reverse function (glass reverse operation)) →(*1) →AUTO UP HOLD →(the auto-reverse function (glass reverse operation)) →AUTO UP HOLD (*2).
  *1: If DOWN operation, IG OFF & timer operation OFF, and/or index operation is executed between auto-reverse function and AUTO UP HOLD, return to the beginning of the procedure.
  *2: The upper end position of the glass is relearned by this operation (AUTO UP HOLD). (Refer to WS - 5)
  *3: The failure of the door glass or regulator may prevent full closing of the door glass.

NOTE:

If any malfunction occurs on the pulse sensor in the power window regulator motor ASSY RH (passenger's seat), the fail safe function is triggered. When fail safe is active, AUTO operation is disabled. (During AUTO UP HOLD operation, only manual UP and manual DOWN operations are possible).

Inspection steps

1	Reading of SSM4 data

(1) Using the SSM4, follow the display and read the [Data monitor]. (Refer to WS - 18)
Criteria: The normal value on the data monitor is displayed properly.

SSM4 screen: [Each System] →[Power Window] →[Data monitor]

Item name	Description/display range	Normal value	Remarks
[Passenger seat AUTO SW state]	Operation signal of switch AUTO for the passenger's seat/ Display range: ON-OFF	ON: AUTO switch is in operation. OFF: Neutral	-

NG → Go to Step 3.

OK

2	Perform initialization operation.

(1) Initialize the power window regulator switch ASSY RH (passenger's seat), and verify normal operation. (Refer to WS - 5)
Criteria: It operates properly.

NG → Replacement of the power window regulator motor ASSY RH (passenger's seat) (Refer to WS - 58)

OK

Complete (due to failed initialization)

3	Replacement of the power window regulator switch ASSY

(1) Replace with the new or normal power window regulator switch ASSY, and verify normal operation. (Refer to WS - 54)

Result

Item	Go to
Motor operates.	A
Motor does not operate.	B

B → Replacement of the power window regulator motor ASSY RH (passenger's seat) (Refer to WS - 58)

A

Complete (failed power window regulator switch ASSY)

Door glass does not fully close in AUTO UP operation (auto-reverse function is activated)

Circuit description

If the door glass or power window regulator motor does not operate smoothly, auto-reverse function is activated automatically. Consequently, the AUTO UP function cannot fully close the windows.

CAUTION:

- When replacing the power window regulator motor ASSY with a new one or reusing its motor, perform the initialization of the power window system. (Refer to WS - 5)
- After replacing door glass and/or weather strip, AUTO UP operation sometimes activates auto-reverse function. In this case, the door glass is fully closed by performing the procedure in the following order (*3). AUTO UP HOLD →(the auto-reverse function (glass reverse operation)) →(*1) →AUTO UP HOLD →(the auto-reverse function (glass reverse operation)) →AUTO UP HOLD (*2).
  - *1: If DOWN operation, IG OFF & timer operation OFF, and/or index operation is executed between auto-reverse function and AUTO UP HOLD, return to the beginning of the procedure.
  - *2: The upper end position of the glass is relearned by this operation (AUTO UP HOLD). (Refer to WS - 5)
  - *3: The failure of the door glass or regulator may prevent full closing of the door glass.

Inspection steps

1	Power window system (initialization)

(1) Initialize the power window regulator motor ASSY LH (driver's seat) and power window regulator motor ASSY RH (passenger's seat), and verify normal operation. (Refer to WS - 5)
Criteria: It operates properly.

NG → Go to Step 2.

OK →

Complete (due to failed initialization)

2	Installation of door glass slide resistance (driver's door glass)

(1) Remove the door glass mounting bolts, and check if the door glass can be lifted with hands smoothly without being caught.
NOTE:
- The door glass is not in abnormal contact with the glass run.
- Glass run has no deformation or foreign matter inside.

NG → Install the glass properly (remove foreign matter which causes installation failure, fix the installation, or reinstall)

OK →

Replacement of the power window regulator motor ASSY (driver's or passenger's seat) (Refer to WS - 58)

Cannot remotely control other doors from the master switch (each door can be operated by its door switch)

Circuit description

Power window regulator master switch ASSY transmits the remote control switch signal of the other seat to the passenger's seat power window regulator switch ASSY (When IG is ON). The passenger's seat power window regulator switch ASSY, which receives the signal, operates according to the remote control switch signal of the other seat.

CAUTION:

- When replacing the power window regulator motor ASSY with a new one or reusing its motor, perform the initialization of the power window system. (Refer to WS - 5)
- After replacing door glass and/or weather strip, AUTO UP operation sometimes activates auto-reverse function. In this case, the door glass is fully closed by performing the procedure in the following order (*3). AUTO UP HOLD →(the auto-reverse function (glass reverse operation)) →(*1) →AUTO UP HOLD →(the auto-reverse function (glass reverse operation)) →AUTO UP HOLD (*2).
  *1: If DOWN operation, IG OFF & timer operation OFF, and/or index operation is executed between auto-reverse function and AUTO UP HOLD, return to the beginning of the procedure.
  *2: The upper end position of the glass is relearned by this operation (AUTO UP HOLD). (Refer to WS - 5)
  *3: The failure of the door glass or regulator may prevent full closing of the door glass.

Inspection steps

1	Inspection of power window regulator master switch ASSY (window lock switch)

(1) Verify when the window lock switch on the power window regulator master switch ASSY is pushed, the power windows for seats other than driver's will be inoperable.
(2) Verify when window lock switch is pushed once more, power window of each seat other than driver's will be operable.
Criteria: Power window of each seat is operable

NG → Replacement of the power window regulator master switch ASSY (Refer to WS - 52)

OK

2	Reading of SSM4 data

(1) Using the SSM4, follow the display and read the [Data monitor]. (Refer to WS - 18)
Criteria: The normal value on the [Data monitor] is displayed properly.

SSM4 screen: [Each System] →[Power Window] →[Data monitor]

Item name	Description/display range	Normal value	Remarks
[Remote SW AUTO SW state]	Operational status of switch AUTO for the passenger's seat/ Display range: ON-OFF	ON: AUTO switch is in operation. OFF: Neutral	-
[Remote SW MANUAL UP SW state]	Operational status of switch UP for the passenger's seat/ Display range: ON-OFF	ON: UP switch is in operation. OFF: Neutral	-
[Remote SW MANUAL DOWN SW state]	Operational status of switch DOWN for the passenger's seat/ Display range: ON-OFF	ON: DOWN switch is in operation. OFF: Neutral	-

NG → Replacement of the power window regulator master switch ASSY (Refer to WS - 52)

WS

OK

3	Inspection of the wire harness and connector (power window regulator master switch ASSY - power window regulator switch ASSY)

(1) Disconnect the connector E8 of power window regulator master switch ASSY.
(2) Disconnect the connector F6 of power window regulator switch ASSY.
(3) Measure the resistance between the terminals.

Resistance (open circuit check)

Inspection terminals (Terminal symbol)	Inspection conditions	Standard value
E8-2 (UART) - F6-2 (UART)	Always	Less than 1 Ω

Resistance (short circuit check)

Inspection terminals (Terminal symbol)	Inspection conditions	Standard value
E8-2 (UART) - chassis ground	Always	10 kΩ or more

NG → Repair or replacement of wiring harness or connector

OK

Replacement of the power window regulator switch ASSY LH (Refer to WS - 58)

Even though the conditions are not met, door glass can be operated after key OFF

Circuit description

After IG ON →OFF, if the driver's or passenger's door has not been opened within approx. 45 seconds, the power window regulator master switch ASSY and the power window regulator switch ASSY can operate own seat's door glass (after-key-OFF operation function). After approx. 45 seconds have passed, or when the driver's or passenger's door is opened, the after-key-OFF operation function will be stopped.

CAUTION:

- When replacing the power window regulator motor ASSY with a new one or reusing its motor, perform the initialization of the power window system. (Refer to WS - 5)
- After replacing door glass and/or weather strip, AUTO UP operation sometimes activates auto-reverse function. In this case, the door glass is fully closed by performing the procedure in the following order (*3). AUTO UP HOLD →(the auto-reverse function (glass reverse operation)) →(*1) →AUTO UP HOLD →(the auto-reverse function (glass reverse operation)) →AUTO UP HOLD (*2).
  *1: If DOWN operation, IG OFF & timer operation OFF, and/or index operation is executed between auto-reverse function and AUTO UP HOLD, return to the beginning of the procedure.
  *2: The upper end position of the glass is relearned by this operation (AUTO UP HOLD). (Refer to WS - 5)
  *3: The failure of the door glass or regulator may prevent full closing of the door glass.

WS

Inspection steps

1	Verification of after-key-OFF operation

(1) Check the symptom when power window regulator master switch ASSY is operated.

Result

Result	Go to
When the driver's or passenger's door is opened and closed within approx. 45 seconds after IG OFF, operation is possible.	A
When approx. 45 seconds have passed after IG OFF, all door glasses can be operated.	B
When approx. 45 seconds have passed after IG OFF, the driver's side door glass can be operated.	B
When approx. 45 seconds have passed after IG OFF, the passenger's side door glass can be operated.	C

(2) Check the symptom when power window regulator switch ASSY is operated.

Result

Result	Go to
When the driver's or passenger's door is opened and closed within approx. 45 seconds after IG OFF, operation is possible.	A
When approx. 45 seconds have passed after IG OFF, the passenger's side door glass can be operated.	D

B → Replacement of the power window regulator master switch ASSY (Refer to WS - 52)

C → Go to Step 4.

D → Go to Step 5.

A

2	Reading of SSM4 data

(1) Using the SSM4, follow the display and read the [Data monitor]. (Refer to WS - 18)

Criteria: The normal value on the [Data monitor] is displayed properly.

SSM4 screen: [Each System] →[Power Window] →[Data monitor]

Item name	Description/display range	Normal value	Remarks
[Drivers seat Courtesy SW state]	Status of driver's door courtesy lamp switch/ Display range: ON-OFF	ON: Driver's door is opened. OFF: Driver's door is closed.	-

NG → Inspection of courtesy lamp switch system (Refer to LI - 25)

OK

3	Operation inspection after IG OFF

(1) After IG OFF, open and close the door, and then check the operation.

Result

Result	Go to
When the driver's door has been opened and closed after IG OFF, operation is possible.	A

Result	Go to
When the passenger's door has been opened and closed after IG OFF, operation is possible.	B

A → Replacement of the power window regulator master switch ASSY (Refer to WS - 52)

B → Go to Step 5.

4	Replacement of the power window regulator master switch ASSY

(1) Replace with the new or normal power window regulator master switch ASSY, and verify normal operation. (Refer to WS - 58)
Criteria: No fault is found.

NG → Replacement of the power window regulator switch ASSY (Refer to WS - 58)

OK

Complete (power window regulator master switch ASSY is failed)

5	Replacement of the power window regulator switch ASSY

(1) Replace with the new or normal power window regulator switch ASSY, and verify normal operation. (Refer to WS - 58)
Criteria: No fault is found.

NG → Replacement of the power window regulator master switch ASSY (Refer to WS - 58)

OK

Complete (failed power window regulator switch ASSY)

WS

Index function does not operate (Driver's seat and passenger's seat)

CAUTION:
- When replacing the power window regulator motor ASSY with a new one or reusing its motor, perform the initialization of the power window system. (Refer to WS - 5)
- After replacing door glass and/or weather strip, AUTO UP operation sometimes activates auto-reverse function. In this case, the door glass is fully closed by performing the procedure in the following order (*3). AUTO UP HOLD →(the auto-reverse function (glass reverse operation)) →(*1) →AUTO UP HOLD →(the auto-reverse function (glass reverse operation)) →AUTO UP HOLD (*2).
  *1: If DOWN operation, IG OFF & timer operation OFF, and/or index operation is executed between auto-reverse function and AUTO UP HOLD, return to the beginning of the procedure.
  *2: The upper end position of the glass is relearned by this operation (AUTO UP HOLD). (Refer to WS - 5)
  *3: The failure of the door glass or regulator may prevent full closing of the door glass.

Inspection steps
CAUTION:
Before performing the diagnosis, refer to the precautions.

1	Reading SSM4 data

(1) Using the SSM4, follow the display and read the [Data monitor]. (Refer to WS - 18)
Criteria: The normal value on the [Data monitor] is displayed properly.

SSM4 screen: [Each System] →[Power Window] →[Data monitor]

Item name	Description/display range	Normal value	Remarks
[Drivers seat Courtesy SW state]	Status of driver's door courtesy lamp switch/ Display range: ON-OFF	ON: Driver's door is opened. OFF: Driver's door is closed.	-
[Passenger seat Courtesy SW state]	Status of passenger's door courtesy lamp switch/ Display range: ON-OFF	ON: Passenger's door is opened. OFF: Passenger's door is closed.	-

NG → Inspection of courtesy lamp switch system (Refer to LI - 25)

OK

2	Reinitialization of the power window master switch/power window switch

(1) Reinitialize the power window master switch/power window switch.
Criteria: No fault is found.

NG → Go to Step 3.

OK

Complete

WS

3	Reading SSM4 data

(1) Using the SSM4, follow the display and read the [Data monitor]. (Refer to WS - 18)
(2) When the glass is in top position and the courtesy SW status changes from OFF to ON, check the window position counter.
Criteria: Pulse fluctuates (approx. 30 pulses).

SSM4 screen: [Each System] →[Power Window] →[Data monitor]

Item name	Description/display range	Normal value	Remarks
[Drivers seat Courtesy SW state]	Status of driver's door courtesy lamp switch/ Display range: ON-OFF	ON: Driver's door is opened. OFF: Driver's door is closed.	-
[Passenger seat Courtesy SW state]	Status of passenger's door courtesy lamp switch/ Display range: ON-OFF	ON: Passenger's door is opened. OFF: Passenger's door is closed.	-

Item name	Description/display range	Normal value	Remarks
[Drivers seat window position counter]	Position information of driver's door glass Display range: -100 to 700	-	-
[Passenger seat window position counter]	Position information of passenger's door glass/ Display range: -100 to 700	-	-

NG → Go to Step 5.

OK

4	Unit inspection of the power window regulator motor ASSY

(1) Remove the power window regulator motor ASSY. (Refer to WS - 58)
(2) Perform unit inspection of the power window regulator motor ASSY.

NG → Replacement of the power window regulator motor ASSY (If the function does not operate after the replacement, replace the power window master switch)

OK

Replacement of the power window regulator (Refer to WS - 58)

5	Replacement of the power window regulator switch ASSY

(1) Replace with the new or normal power window regulator master switch ASSY, and verify normal operation. (Refer to WS - 58)

Result

Item	Go to
Motor does not operate.	A
Motor operates.	B

B → Complete

A

6	Unit inspection of power window regulator motor ASSY

(1) Remove the power window regulator motor ASSY. (Refer to WS - 58)
(2) Perform unit inspection of the power window regulator motor ASSY.

NG → Replacement of the power window regulator motor ASSY

OK

Replacement of the power window regulator (Refer to WS - 58)

Power window regulator master switch ASSY

Exploded view

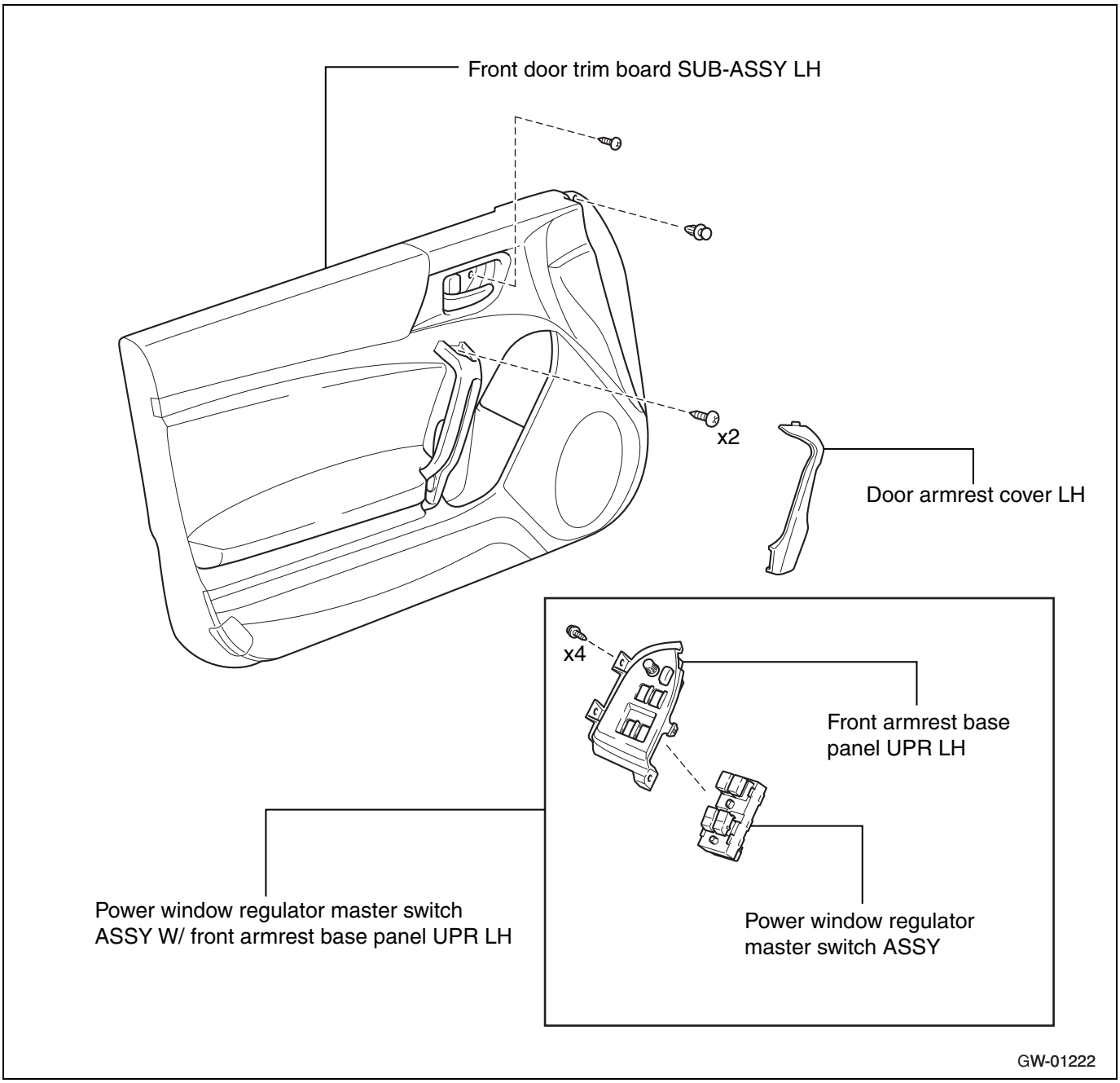

Removal

1. Disconnection of the battery ground terminal (Refer to IN - 6)
2. Removal of the door armrest cover LH (Refer to DH - 32)
3. Removal of the front door trim board SUB-ASSY LH (Refer to DH - 32)
4. Removal of power window regulator master switch ASSY W/front armrest base panel UPR LH (driver's side door) (Refer to DH - 33)

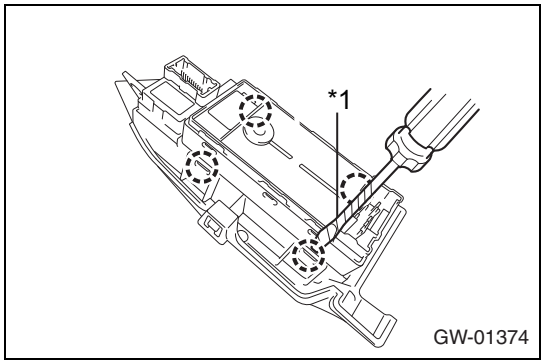

5. Removal of power window regulator master switch ASSY
   (1) Using a flat head screw driver wrapped in protective tape, release the 4 tabs and remove the power window regulator master switch ASSY from the front armrest base panel UPR LH.

*1	Protective tape

Installation

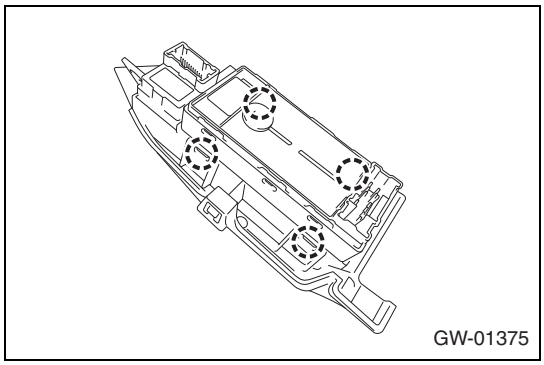

1. Installation of power window regulator master switch ASSY
   (1) Engage the 4 claws and install the power window regulator master switch ASSY to the front armrest base panel UPR LH.
2. Installation of the power window regulator master switch ASSY W/ front armrest base panel UPR LH (Refer to DH - 52)
3. Installation of the front door trim board SUB-ASSY LH (Refer to DH - 52)
4. Installation of the door armrest cover LH (Refer to DH - 54)
5. Connection of the battery ground terminal
   Standard value:T=6.0N·m {61kgf·cm} {4.4ft·lbf}
6. Settings when removing/installing battery terminals (Refer to IN - 10)

Power window regulator switch ASSY (installed to the front side)

Exploded view

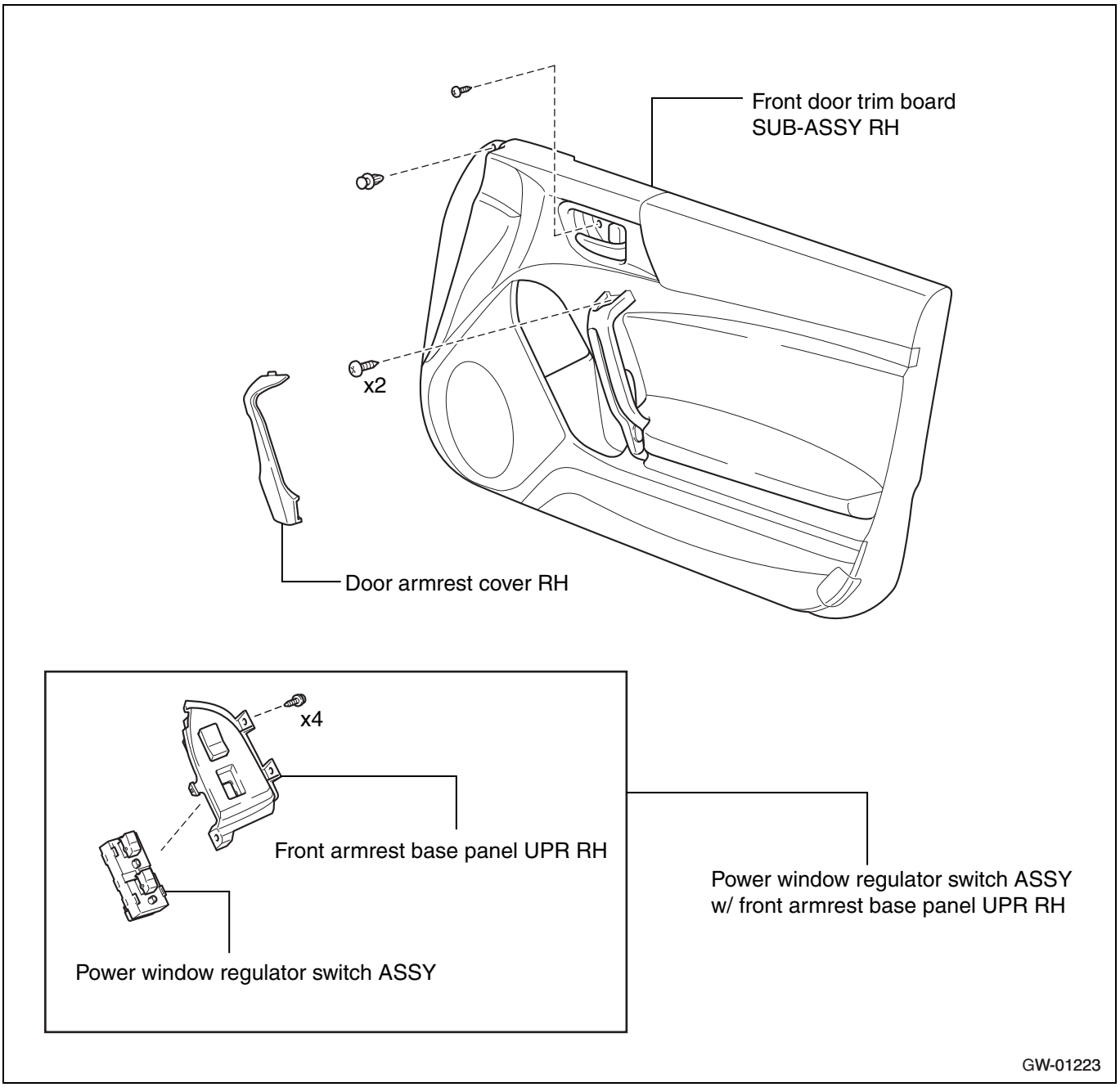

Removal

1. Disconnection of the battery ground terminal (Refer to IN - 6)
2. Removal of door armrest cover RH
   Remove the part in the same manner as LH side. (Refer to DH - 32)
3. Removal of front door trim board SUB-ASSY RH
   Remove the part in the same manner as LH side. (Refer to DH - 32)
4. Removal of power window regulator switch ASSY W/front armrest base panel UPR RH (passenger's side door) (Refer to DH - 34)

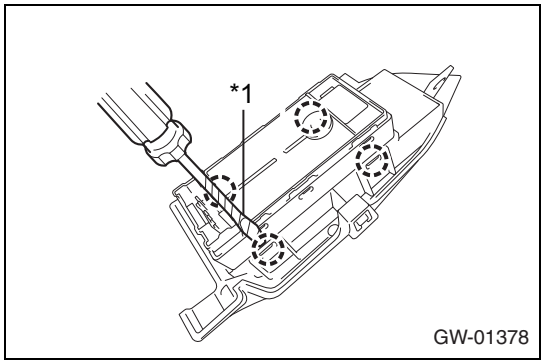

5. Removal of power window regulator switch ASSY
   (1) Using a flat head screw driver wrapped in protective tape, release the 4 tabs and remove the power window regulator switch ASSY from the front armrest base panel UPR RH.

*1	Protective tape

Installation

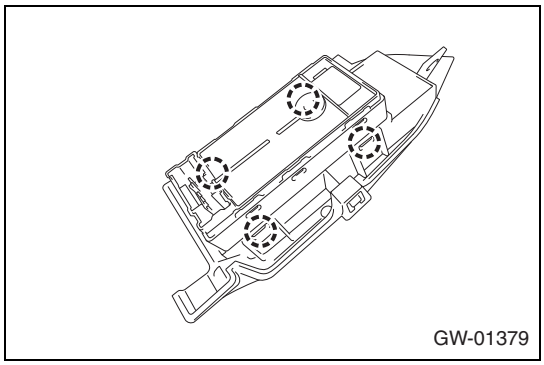

1. Installation of power window regulator switch ASSY
   (1) Engage the 4 claws and install the power window regulator switch ASSY to the front armrest base panel UPR RH.
2. Installation of power window regulator switch ASSY W/front armrest base panel UPR RH (Refer to DH - 52)
3. Installation of front door trim board SUB-ASSY RH
   Install the part in the same manner as LH side. (Refer to DH - 52)
4. Installation of door armrest cover RH
   Install the part in the same manner as LH side. (Refer to DH - 54)
5. Connection of the battery ground terminal
   Standard value:T=6.0N·m {61kgf·cm} {4.4ft·lbf}
6. Settings when removing/installing battery terminals (Refer to IN - 10)

Power window regulator motor ASSY (installed to the front side)

Exploded view

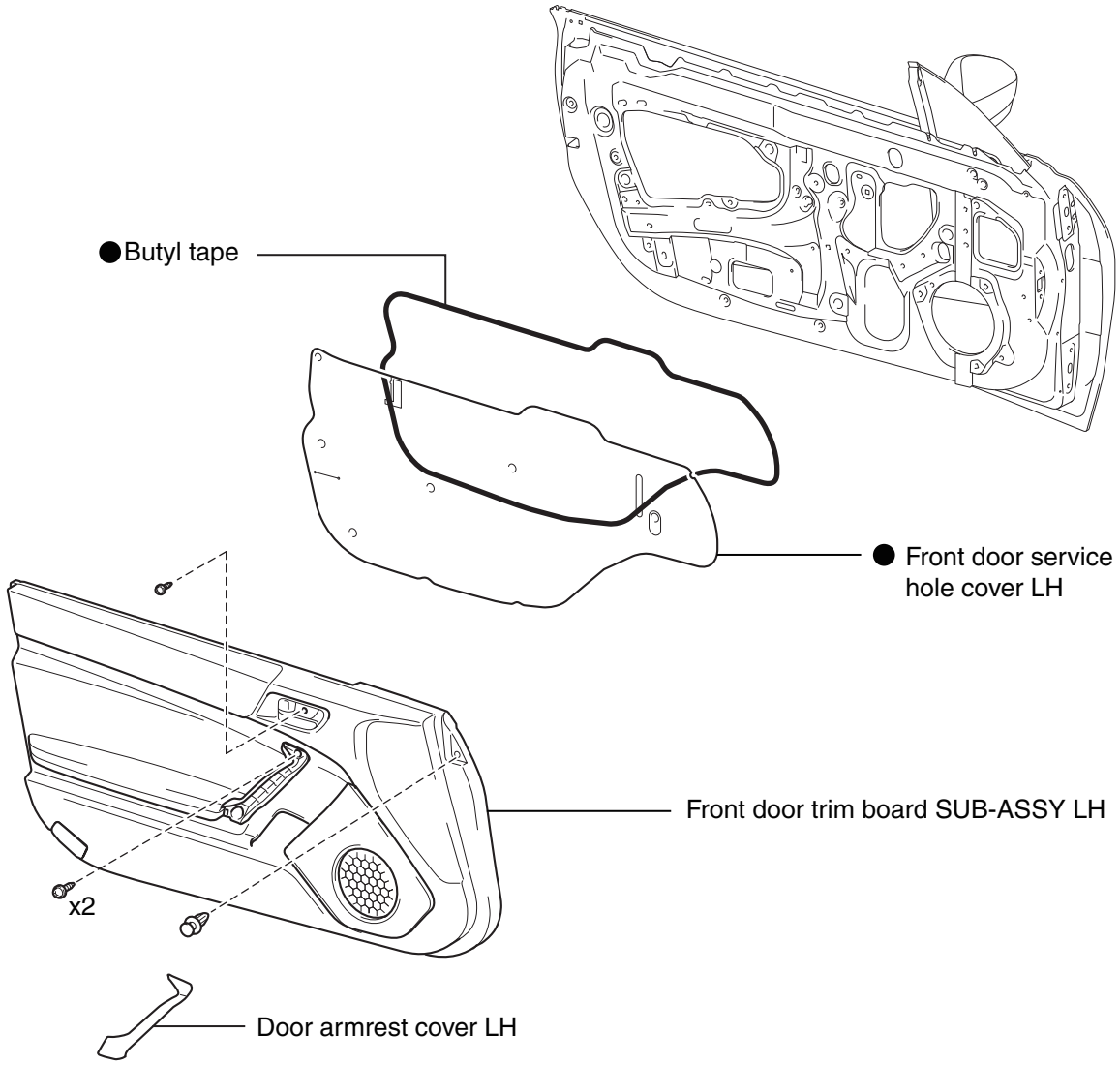

Driver's seat:



Power window regulator master switch ASSY w/ front armrest base panel UPR LH

Passenger's seat:

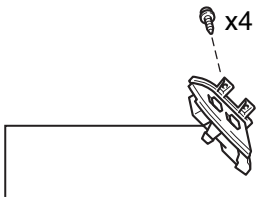

Power window regulator switch ASSY w/ front armrest base panel UPR RH

● Non-reusable parts

GW-01224

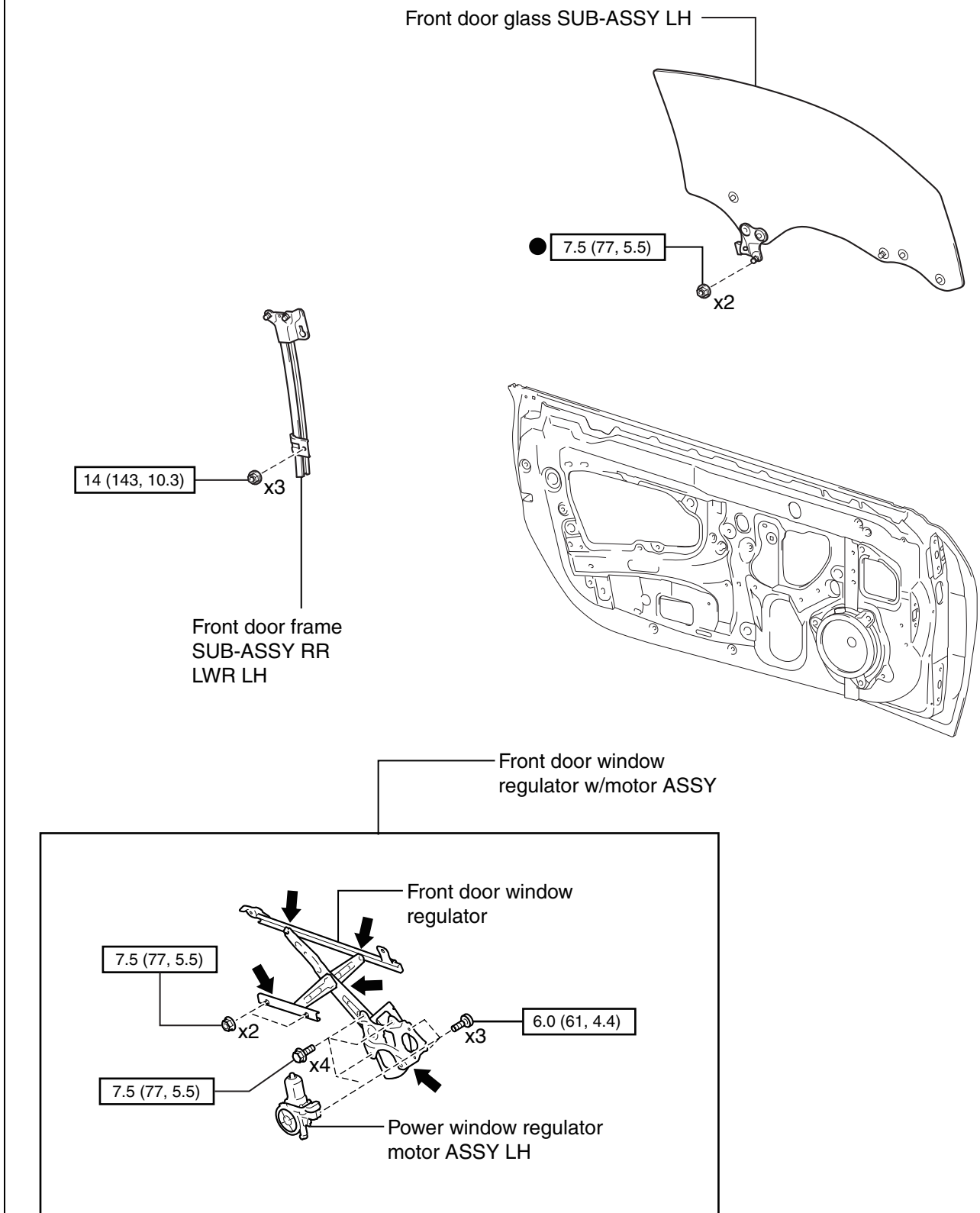
Front door glass SUB-ASSY LH
7.5 (77, 5.5)
x2
14 (143, 10.3)
x3
Front door frame
SUB-ASSY RR
LWR LH
Front door window
regulator w/motor ASSY
Front door window
regulator
7.5 (77, 5.5)
x2
6.0 (61, 4.4)
x3
x4
7.5 (77, 5.5)
Power window regulator
motor ASSY LH
N•m {kgf•cm,ft•lbf} : Tightening torque
Body grease
Non-reusable parts
GW-01225

WS

Removal

NOTE:

The following procedure is for LH side. Perform the same procedures both for the LH side and RH side, unless otherwise specified.

1. Disconnection of the battery ground terminal (Refer to IN - 6)
2. Removal of the door armrest cover LH (Refer to DH - 32)
3. Removal of the front door trim board SUB-ASSY LH (Refer to DH - 32)
4. Removal of power window regulator master switch ASSY W/front armrest base panel UPR LH (driver's side door) (Refer to DH - 33)
5. Removal of power window regulator switch ASSY W/front armrest base panel UPR RH (passenger's side door) (Refer to DH - 34)
6. Removal of the front door service hole cover LH (Refer to DH - 36)
7. Removal of front door glass SUB-ASSY LH (Refer to DH - 36)
8. Removal of the front door frame SUB-ASSY RR LWR LH (Refer to DH - 37)
9. Removal of front door window regulator W/motor ASSY (Refer to DH - 38)

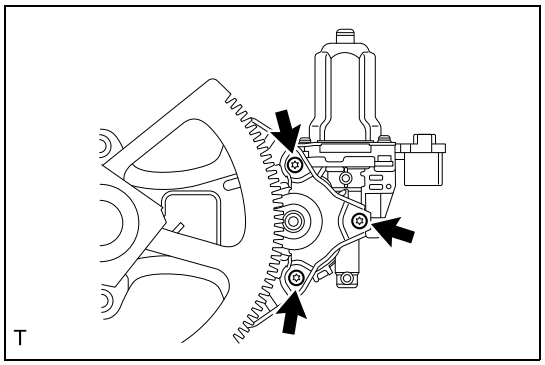

10. Removal of power window regulator motor ASSY LH
    (1) Using Torx socket wrench T25, remove the 3 Torx screws, and remove the power window regulator motor ASSY LH from the front door window regulator LH.

Installation

NOTE:

The following procedure is for LH side. Perform the same procedures both for the LH side and RH side, unless otherwise specified.

1. Installation of power window regulator motor ASSY LH
    (1) Using Torx socket wrench T25, with the 3 Torx screws, install the power window regulator motor ASSY LH onto the front door window regulator LH.
    Standard value:T=6.0N·m {61kgf·cm} {4.4ft·lbf}
2. Installation of front door window regulator W/motor ASSY (Refer to DH - 47)
3. Installation of the front door frame SUB-ASSY RR LWR LH (Refer to DH - 48)
4. Installation of front door glass SUB-ASSY LH (Refer to DH - 48)
5. Adjustment of the front door glass SUB-ASSY LH
    (1) Check the installation condition of front door glass. (Refer to DH - 54)
    (2) Check the mounting condition of front door glass. (Refer to DH - 55)
6. Installation of the front door service hole cover LH (Refer to DH - 49)
7. Installation of power window regulator master switch ASSY W/front armrest base panel UPR LH (driver's side door) (Refer to DH - 52)
8. Installation of power window regulator switch ASSY W/front armrest base panel UPR RH (passenger's side door) (Refer to DH - 52)
9. Installation of the front door trim board SUB-ASSY LH (Refer to DH - 52)
10. Installation of the door armrest cover LH (Refer to DH - 54)
11. Connection of the battery ground terminal
    Standard value:T=6.0N·m {61kgf·cm} {4.4ft·lbf}
12. Power window registration settings (Refer to WS - 5)

13. Function inspection of the power windows (Refer to WS - 59)

Unit inspection

1. Inspection of power window regulator motor ASSY LH (driver's side door)
   CAUTION:
   - Apply the voltage to the motor terminals 1 and 3 only. Otherwise, the pulse sensor inside the motor can be damaged.
   - After removing or replacing the power window regulator motor ASSY, perform the initialization of the power window system. (Refer to WS - 5)

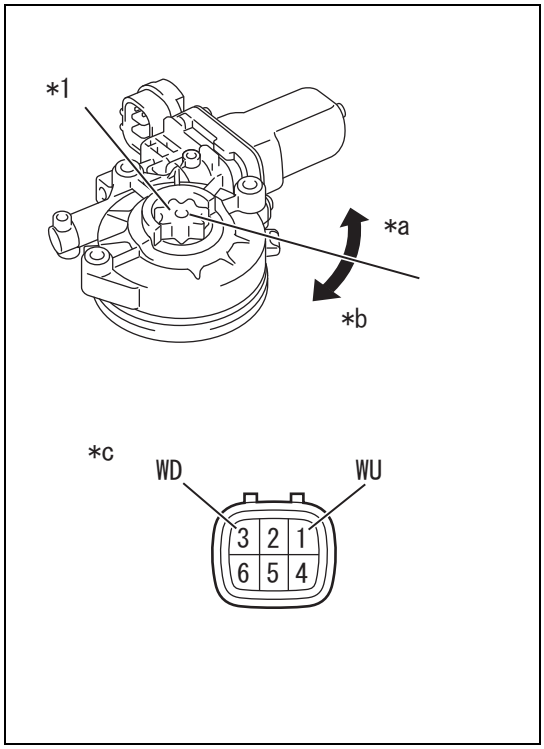

(1) Apply battery voltage to each connector terminal of the power window regulator motor ASSY LH and check that the power window regulator motor ASSY LH operates smoothly.

Criteria

Battery connection	Criteria
Battery positive terminal - 3 (WD) Battery ground terminal - 1 (WU)	Rotates on the drive shaft ccw (open).
Battery positive terminal - 1 (WU) Battery ground terminal - 3 (WD)	Rotates on the drive shaft cw (close).

Captions in illustration

*1	Drive shaft
*a	Rotates on the drive shaft ccw.
*b	Rotates on the drive shaft cw.
*c	Connector not connected (Power window regulator motor ASSY LH)

2. Inspection of power window regulator motor ASSY RH (passenger's side door)
   CAUTION:
   - Apply the voltage to the motor terminals 1 and 3 only. Otherwise, the pulse sensor inside the motor can be damaged.
   - After removing or replacing the power window regulator motor ASSY, perform the initialization of the power window system. (Refer to WS - 5)

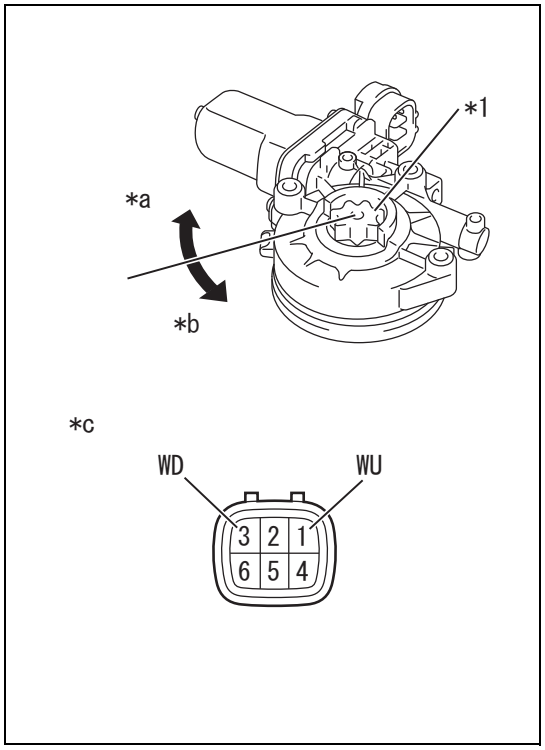

(1) Apply battery voltage to each connector terminal of the power window regulator motor ASSY RH and check that the power window regulator motor ASSY RH operates smoothly.

Criteria

Battery connection	Criteria
Battery positive terminal - 3 (WD) Battery ground terminal - 1 (WU)	Rotates on the drive shaft cw (open).
Battery positive terminal - 1 (WU) Battery ground terminal - 3 (WD)	Rotates on the drive shaft ccw (close).

Captions in illustration

*1	Drive shaft
*a	Rotates on the drive shaft cw.
*b	Rotates on the drive shaft ccw.
*c	Connector not connected (Power window regulator motor ASSY RH)

Windshield glass

Exploded view

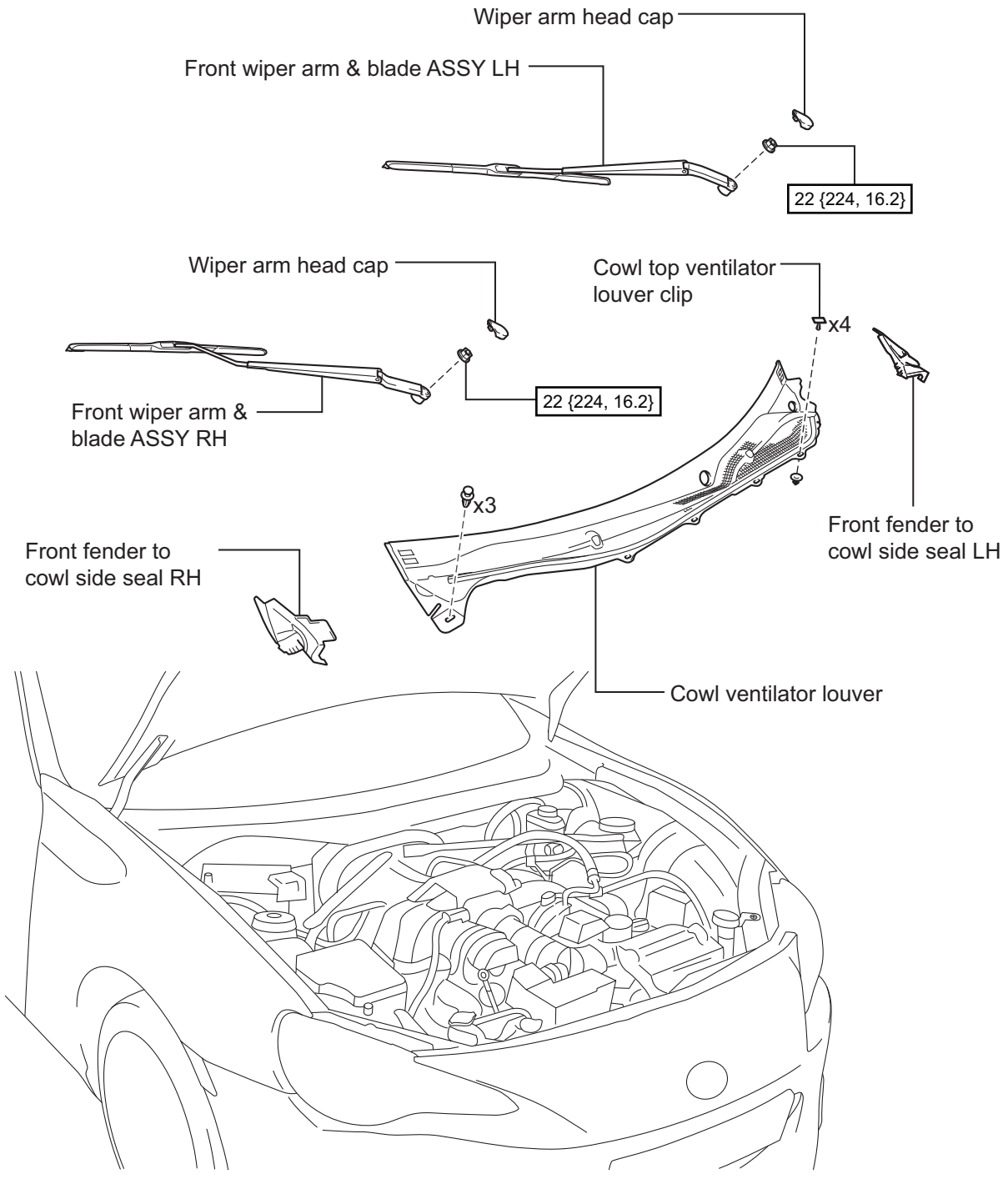

N*m {kgf*cm, ft*lbf}: Tightening torque

WW-10178

WS

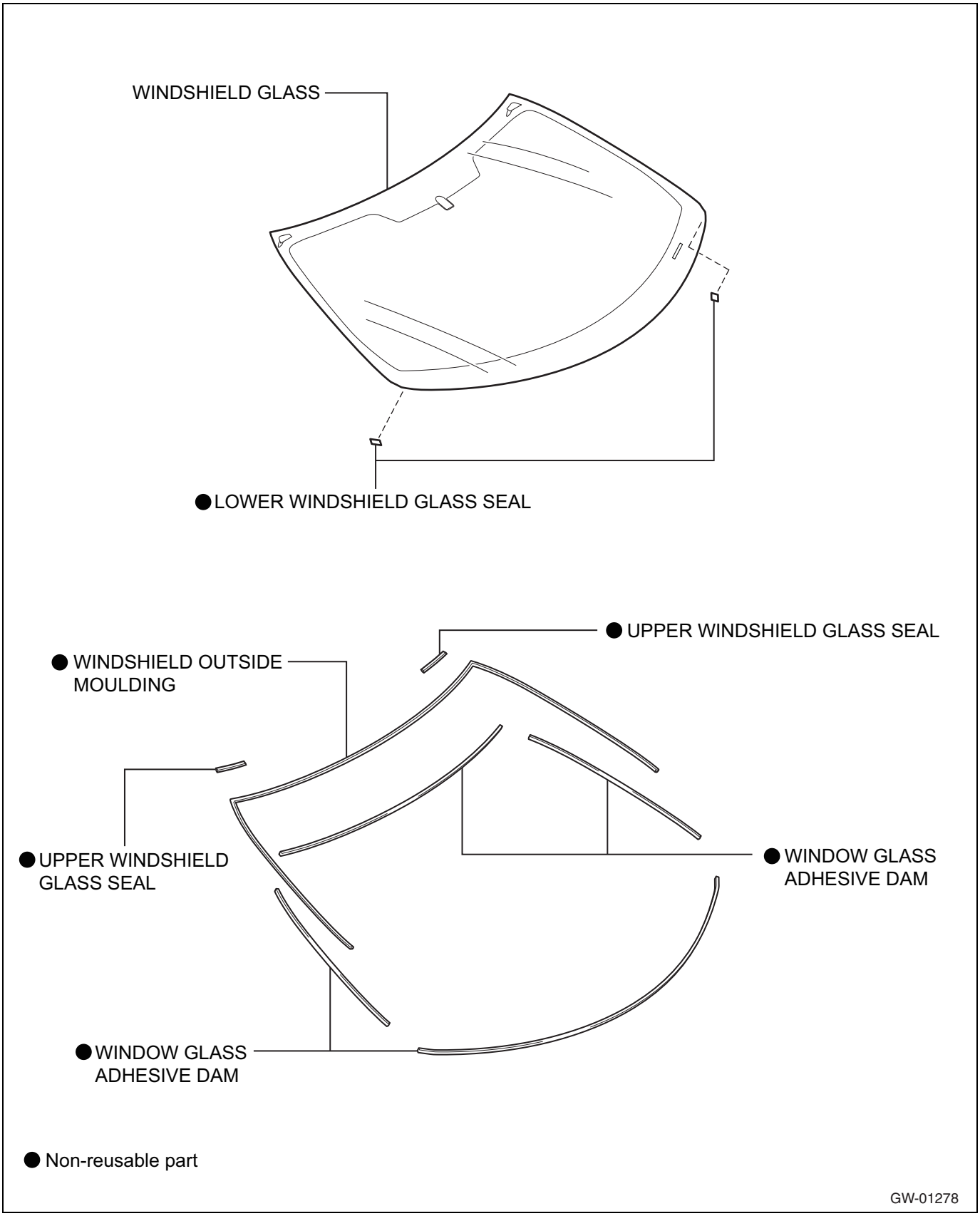

Removal

1. Precautions for the removal/installation of the windshield glass
   (1) If working with piano wire, remove the front pillar garnish first, mount the protect cover on the curtain shield airbag, then begin the removal/installation of the windshield glass.

2. Removal of the wiper arm head caps (Refer to WW - 9)
3. Removal of the front wiper arm & blade ASSY LH (Refer to WW - 9)
4. Removal of the front wiper arm & blade ASSY RH (Refer to WW - 9)
5. Removal of front fender to cowl side seal LH (Refer to WW - 10)
6. Removal of the front fender to cowl side seal RH
   NOTE:
   Remove the part in the same manner as LH side.
7. Removal of the cowl ventilator louver (Refer to WW - 10)
8. Removal of roof head lining ASSY
   (1) Partially detach the front side of the roof head lining ASSY in an area required for removing/installing the windshield glass. (Refer to IT - 52)
   CAUTION:
   Be careful not to damage the roof head lining ASSY.
9. Removal of windshield glass
   CAUTION:
   - Work with the windshield knife or piano wire according to cut location and/or condition.
   - Use the suction rubber to keep the windshield glass in place from outside to avoid dropping the windshield glass during operation.
   - Be careful not to damage the windshield glass because the windshield glass stopper is attached on the windshield glass.

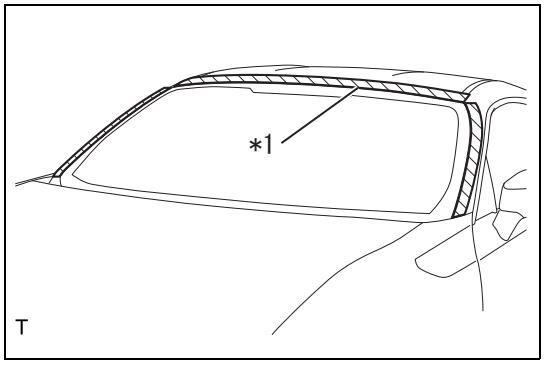

(1) Apply protective tape to the body side of the circumference of windshield glass.

Captions in illustration

*1	Protective tape

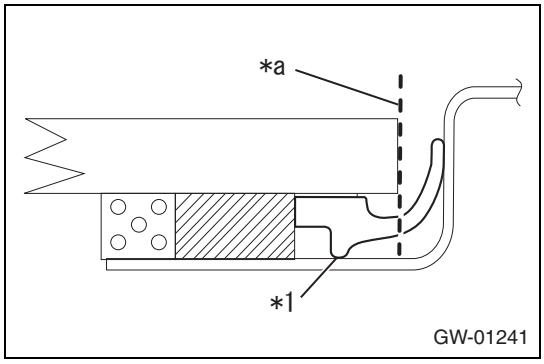

(2) Using the cutter knife, cut the windshield outside molding.
   CAUTION:
   - Do not damage the windshield glass and the body surface.
   - If the body surface is damaged, remove the windshield glass, and then perform the rust prevention treatment.

Captions in illustration

*1	Windshield outside molding
*a	Cut

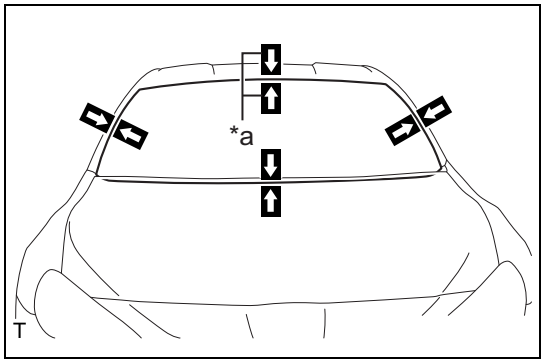

(3) When the windshield glass is reused.

Captions in illustration

*a	Alignment marks

(a) Apply packing tapes or similar tapes on the windshield glass and body panel, and put alignment marks on them with a pen for reinstallation.

(4) Attach the suction rubber onto the windshield glass.

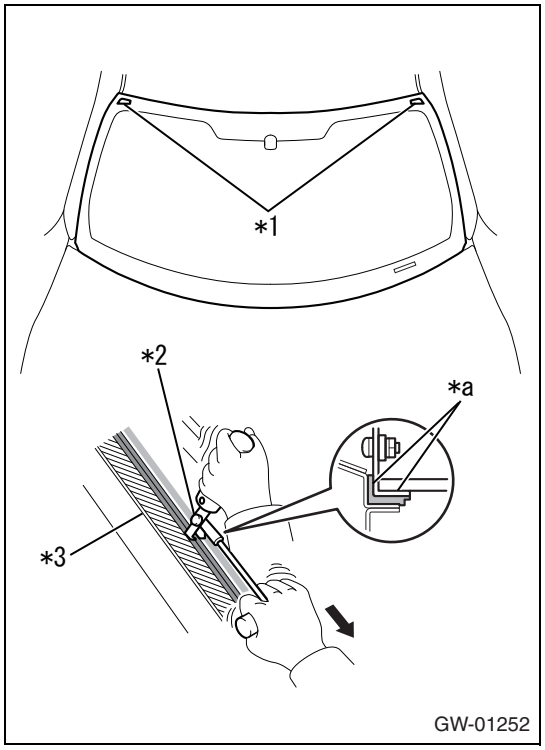

(5) When using the windshield knife
(a) Apply sufficient amount of soapy water to the adhesive section.
(b) Insert the windshield knife into the adhesive section.
(c) Using the windshield knife, insert the blade between the windshield glass and the vehicle body, and move the knife along the edge of the glass to cut adhesive while keeping the blade at right angle with the edge.
CAUTION:
- Never twist the windshield glass knife.
- Do not damage the windshield glass.

NOTE:
Begin from where the windshield glass and the body is most distant.

Captions in illustration

*1	Windshield glass stopper
*2	Windshield knife
*3	Protective tape
*a	Align with the glass

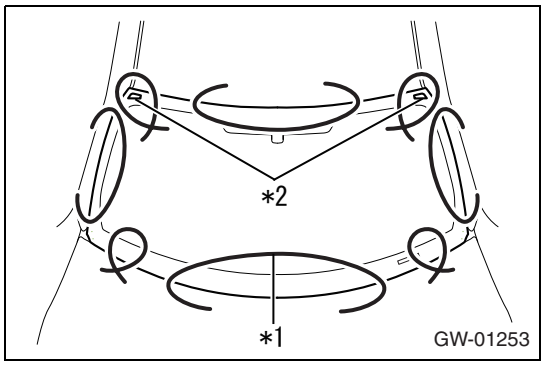

(6) When using piano wire
(a) Using an air drill, make a hole in the adhesive section and pass the piano wire through the hole.
(b) Pass the piano wire (0.6 mm {0.024 in} is recommended) through the point shown in the figure, attach both ends of the wire to wooden boards.
(c) Pull the piano wire both ways and cut the adhesive on the windshield glass.
CAUTION:
- Do not tightly contact the piano wire against the windshield glass edge.
- When working around the curtain shield air bag, do not damage it with the piano wire.
- When working around the instrument panel (safety pad), apply a plastic-made guard plate for preventing any damage by the piano wire.
- Make sure do not cross the piano wires. Otherwise, they can be cut.
- Do not damage the windshield glass.

Captions in illustration

*1	Piano wire
*2	Windshield glass stopper

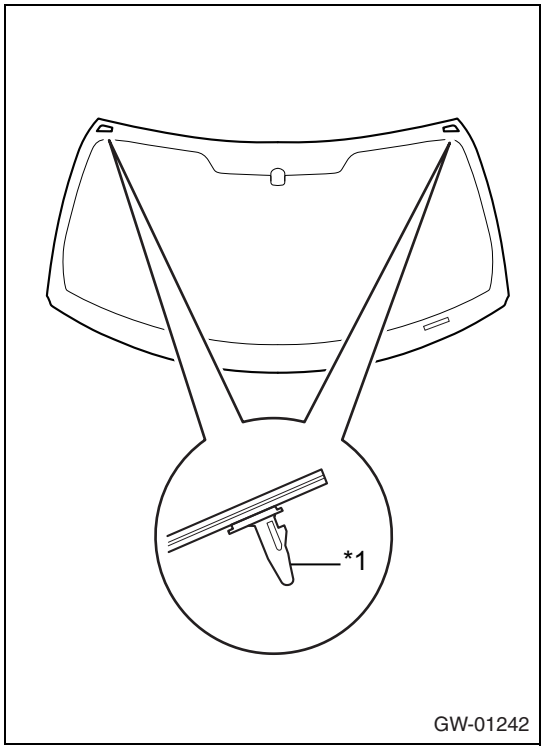

(7) Holding the suction rubbers, release the 2 tabs of the windshield glass stopper, then remove the windshield glass.
CAUTION:
- Be careful not to damage the windshield glass because the windshield glass stopper is attached on the windshield glass.
- Be careful not to drop the windshield glass.

Captions in illustration

*1	Windshield glass stopper

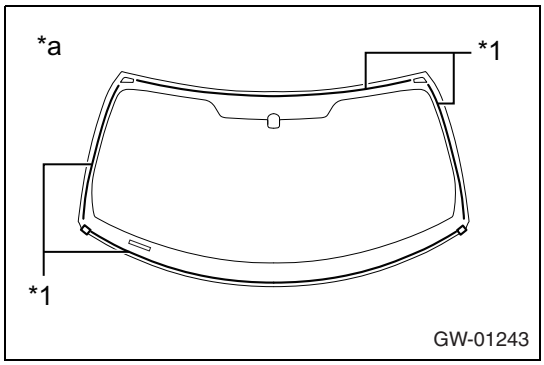

10. Removal of window glass adhesive dam
(1) When the windshield glass is reused.
(a)Using the scraper, remove the window glass adhesive dam.
CAUTION:
- Do not damage the windshield glass.
- The window glass adhesive dam must be replaced by a new one.

Captions in illustration

*1	Window glass adhesive dam
*a	Backside of the windshield glass

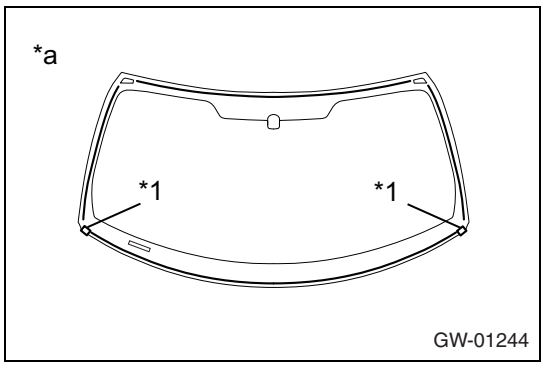

11. Removal of windshield glass seal
(1) When the windshield glass is reused.
(a)Using the scraper, remove 2 window glass seals.
CAUTION:
- Do not damage the windshield glass.
- Windshield glass seal must be replaced by a new one.

Captions in illustration

*1	Windshield glass seal
*a	Backside of the windshield glass

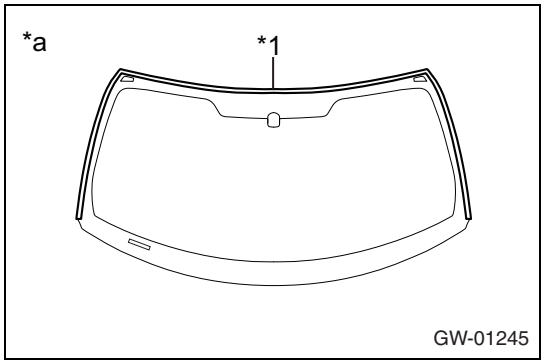

12. Removal of windshield outside molding
(1) When the windshield glass is reused.
(a)Using the scraper, remove the windshield outside molding.
CAUTION:
- Do not damage the windshield glass.
- Windshield outside molding must be replaced by a new one.

Captions in illustration

*1	Windshield outside molding
*a	Backside of the windshield glass

Installation

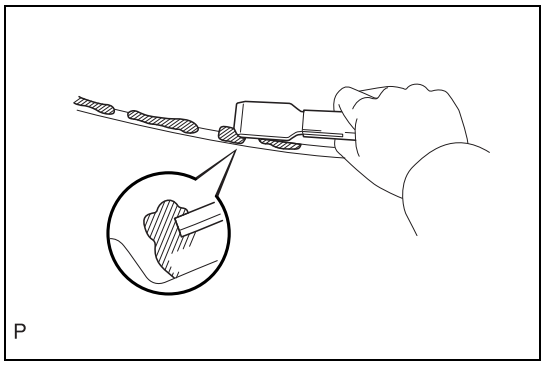

1. Cleaning of windshield glass
   (1) When the windshield glass is reused.
      (a)Using a scraper or similar tool, remove the adhesive and/or double-sided tape remaining on the windshield glass.
      CAUTION:
      Do not damage the windshield glass.
   (2) Using the appropriate cleaner, clean the rim of the windshield glass.
      CAUTION:
      New windshield glass also needs to be cleaned.

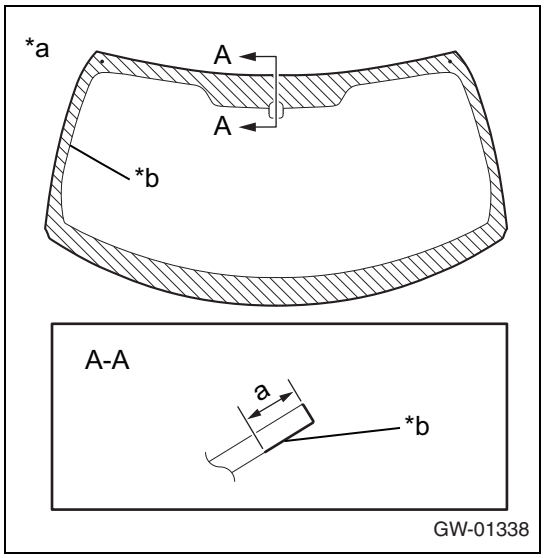

2. Installation of windshield outside molding
   (1) Apply primer to the installation area for the windshield outside molding on the windshield glass.
      Primer: 3M N-200, Sunstar #GP402, or equivalent
      CAUTION:
      Apply the primer to the ceramic part only.

Captions in illustration

*a	Backside of the windshield glass
*b	Primer application area

Standard value

Part	Dimension
a	7mm {0.276in}

   (2) After the primer has been dried, align the windshield outside molding with both side of the windshield glass.

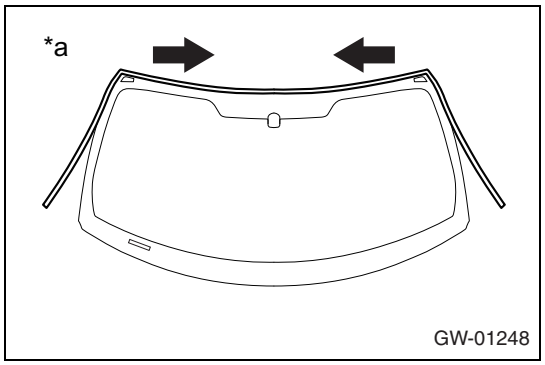

   (3) Using a roller, crimp the windshield outside molding in the direction specified by the arrows in the figure.
      Standard value: 50N/100 mm {5.1 kgf/3.94 in} {11.2 lbf/3.94 in}
      CAUTION:
      Be careful to attach the windshield outside molding firmly so that there is no loose or undulating part.

Captions in illustration

*a	Backside of the windshield glass

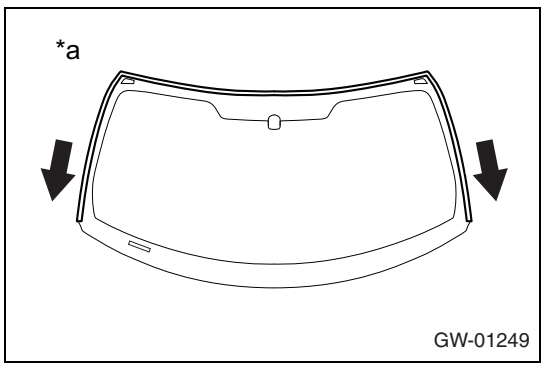

   (4) Using a roller, crimp the windshield outside molding in the direction specified by the arrows in the figure.
      Standard value: 50N/100 mm {5.1 kgf/3.94 in} {11.2 lbf/3.94 in}
      CAUTION:
      Be careful to attach the windshield outside molding firmly so that there is no loose or undulating part.

Captions in illustration

*a	Backside of the windshield glass

3. INSTALL UPPER WINDSHIELD GLASS SEAL
   (1) Install the upper windshield glass seal to the windshield outside molding, as shown in the illustration.

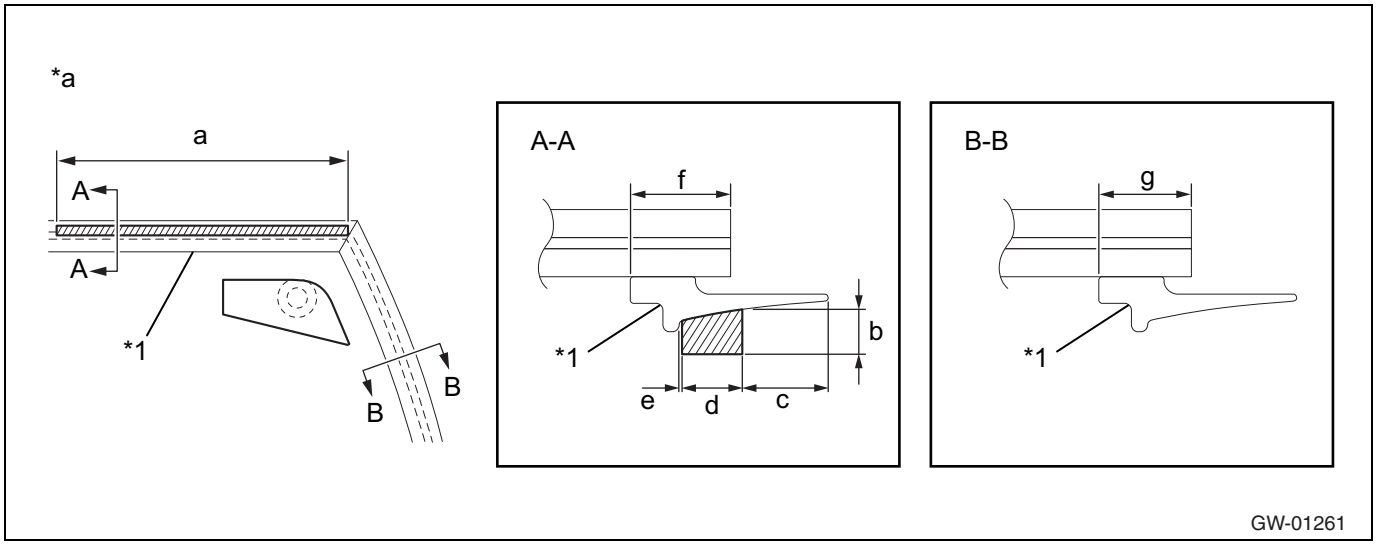

Standard Dimension

Area	Dimension
a	165 mm {6.496 in}
b	3.0 mm {0.118 in}
c	5.7mm {0.224 in}
d	5.0 mm {0.197 in}
e	0 to 0.5 mm {0 to 0.020 in}
f	7.3 mm {0.287in}
g	6.8 mm {0.268 in}

Text in Illustration

*1	Windshield Outside Molding	-	-
*a	Back Side	-	-
▨	Upper Windshield Glass Seal	-	-

4. INSTALL WINDOW GLASS ADHESIVE DAM
   (1) Using the appropriate cleaner, clean the installation surface of the window glass adhesive dam.
   (2) Install the new window glass adhesive dam onto the windshield glass, as shown in the illustration.

WS

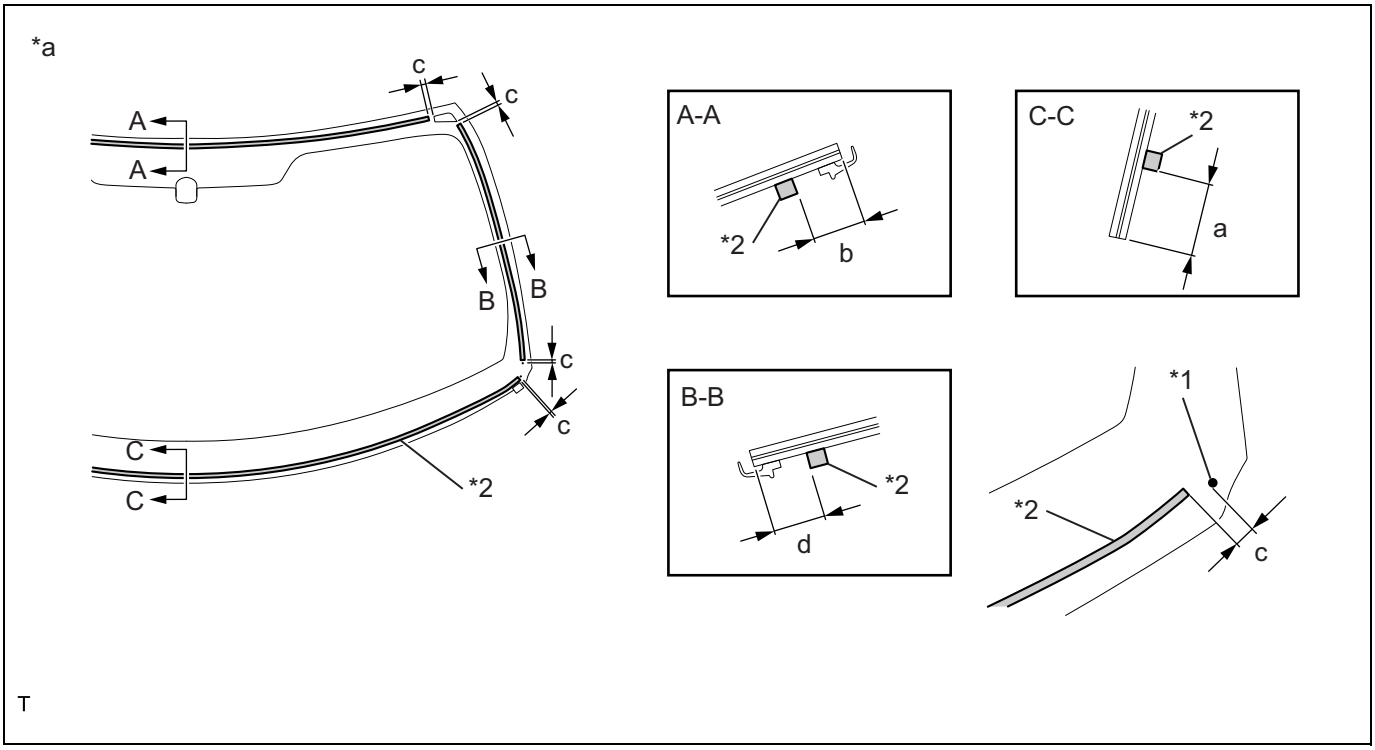

Standard Dimension

Area	Dimension
a	13.0 mm {0.512 in}
b	15.3 mm {0.602 in}
c	0 to 3.0mm {0 to 0.118 in}
d	14.8 mm {0.583 in}

Text in Illustration

*1	Ceramic Notch	*2	Window Glass Adhesive Dam
*a	Back Side	-	-

NOTE:
Use the same procedure for both the RH and LH sides.

5. INSTALL LOWER WINDSHIELD GLASS SEAL
   (1) Using the appropriate cleaner, clean the installation surface of the windshield glass seal.
   (2) Install the new lower windshield glass seal onto the windshield glass, as shown in the illustration.

WS

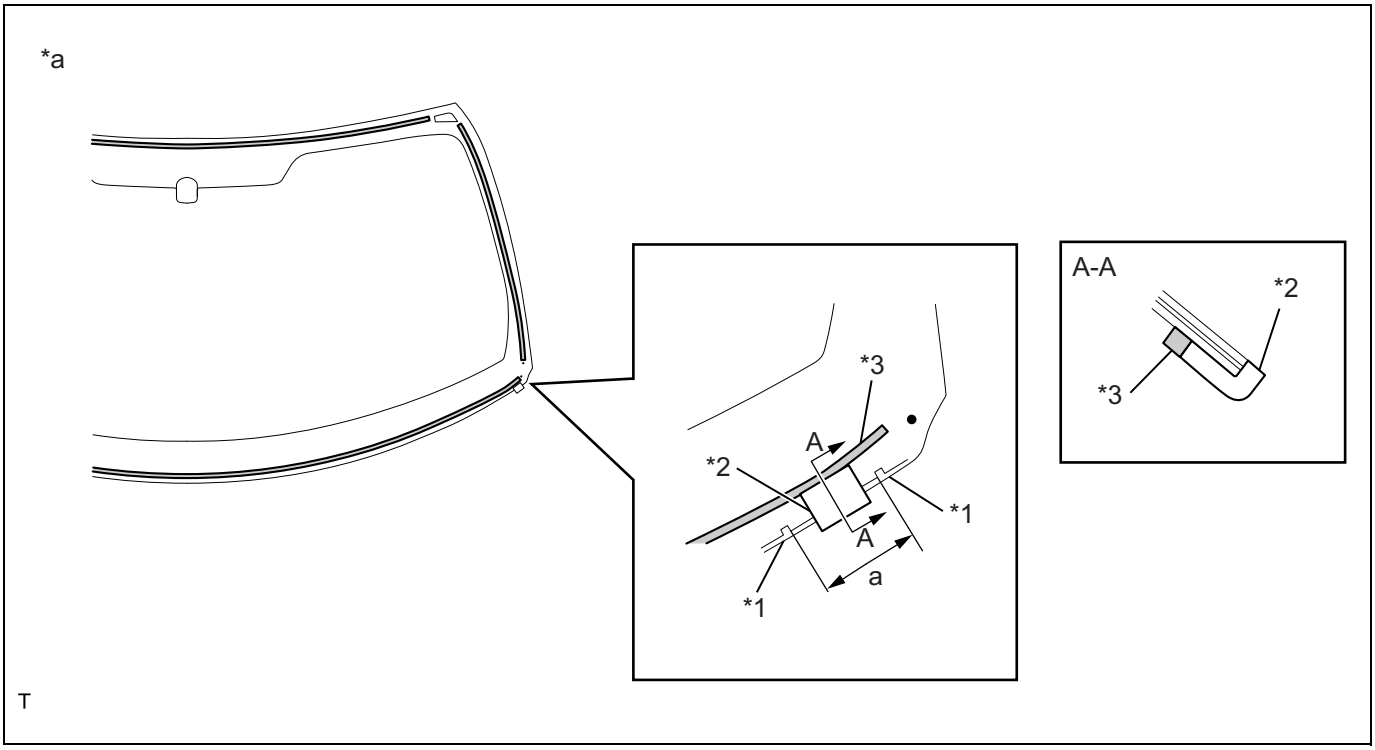

Standard Dimension

Area	Dimension
a	28.0 mm {1.102 in}

Text in Illustration

*1	Ceramic Notch	*2	Lower Windshield Glass Seal
*3	Window Glass Adhesive Dam	-	-
*a	Back Side	-	-

CAUTION:
Install the window glass seal so that it does not protrude onto the glass surface.
NOTE:
Use the same procedure for both the RH and LH sides.

6. Installation of windshield glass
   (1) Cleaning of mounting surface of the body
   (a)Remove the adhesive layer on the body using cutter knife or similar tool to obtain smooth surface of 2 mm {0.08 in} thick.
   CAUTION:
   - Do not damage the body.
   - Always leave a little amount of adhesive.

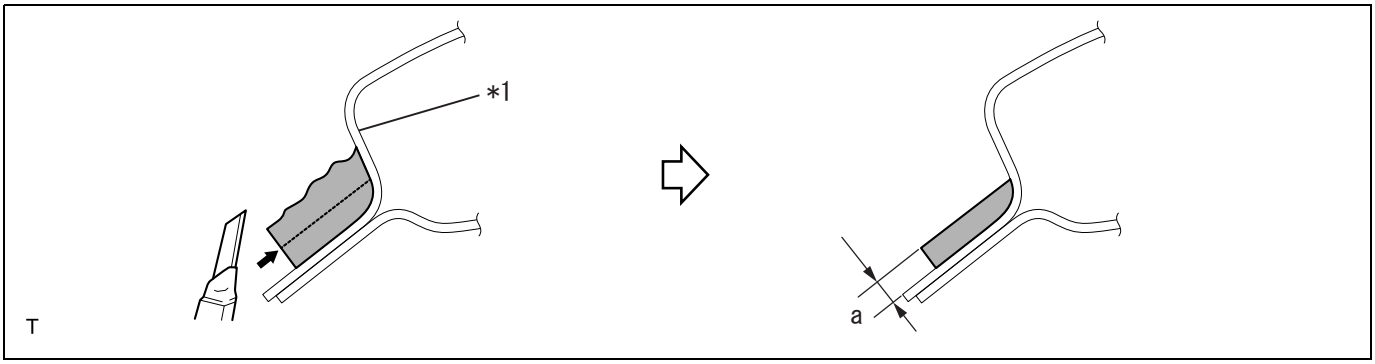

Captions in illustration

*1	Body	-	-

	Adhesive	-	-

Standard value

Part	Dimension
a	2.0 mm {0.079in}

(b)Using the appropriate cleaner, clean the installation surface of the body.

(2) Windshield glass pre-installation work

(a)Attach the suction rubber onto the windshield glass.

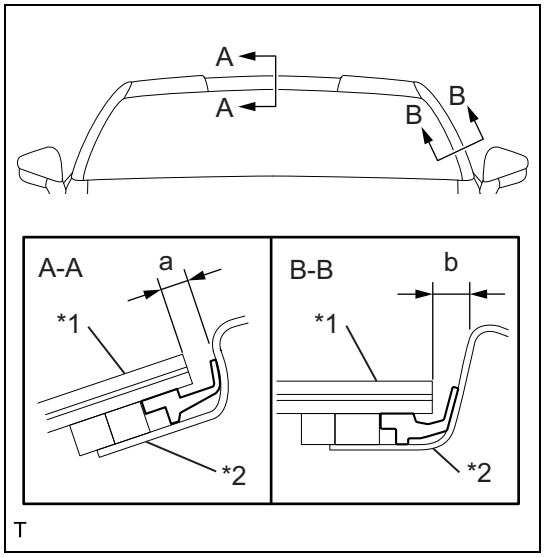

(b)Place the windshield glass on the body temporary, and set them so that windshield glass's upper end and both side have same width (consistent clearance between body and windshield glass edge).

Standard value

Part	Dimension
a	4.0 mm {0.157in}
b	5.0 mm {0.197in}

Captions in illustration

*1	Windshield glass
*2	Body

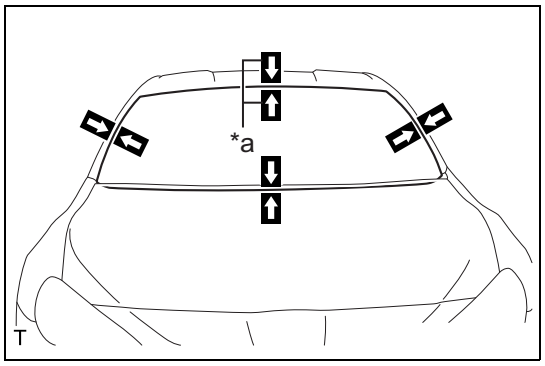

(c)Apply packing tapes or similar tapes on the windshield glass and body panel, and put alignment marks on them with a pen for reinstallation. (When new glass is used.)

Captions in illustration

*a	Alignment marks

CAUTION:

From inside the vehicle, check that windshield glass stoppers and body are engaged.

NOTE:

When windshield glass will be reused, check and correct the position of the alignment marks.

(d)Detach the windshield glass.

(e)Apply primer on the body surface.

Primer: The Dow Automotive U-413 or equivalent

CAUTION:

Do not apply the primer thickly.

(3) Apply primer onto backside of the windshield glass, where indicated in the figure.

Primer: The Dow Automotive U-401, U402 or equivalent

CAUTION:

Do not apply the primer thickly.

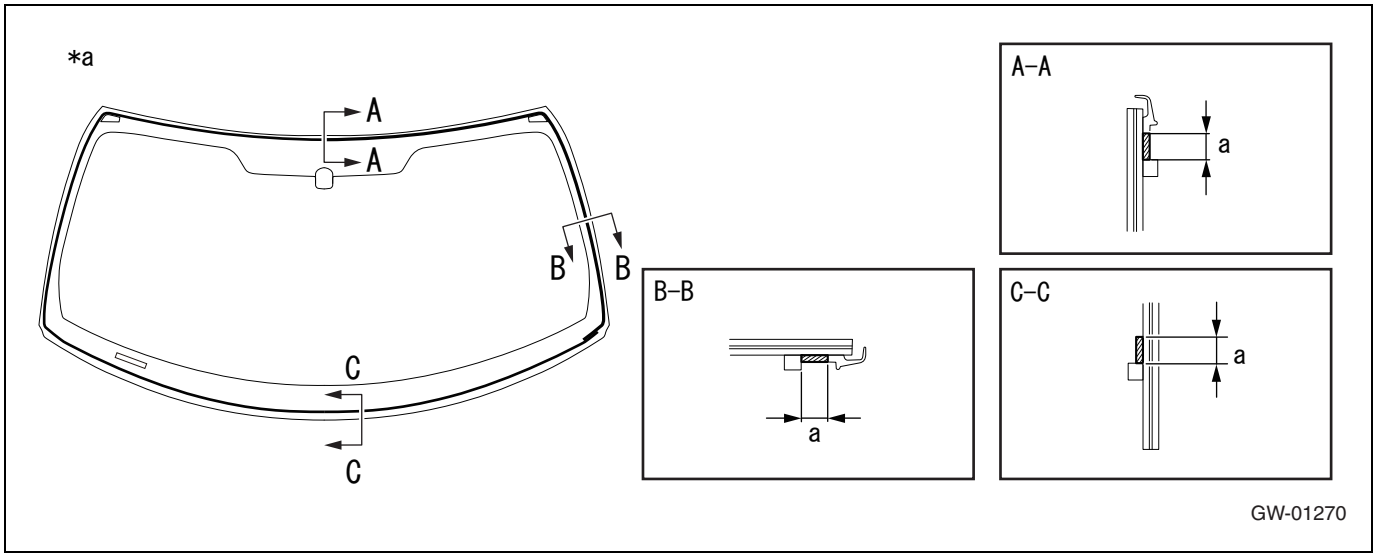

Captions in illustration

*a	Backside of the windshield glass	-	-
	Primer	-	-

Standard value

Part	Dimension
a	8.0 mm {0.315in}

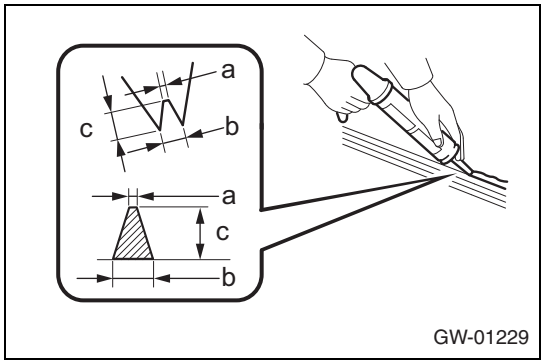

(4) Cut the tip of the adhesive nozzle, as shown in the figure.
Standard value

Part	Dimension
a	2.0 mm {0.029in}
b	8.0 mm {0.315in}
c	9.0 mm {0.354in}

(5) Set the adhesive into the sealant gun.
Adhesive : The Dow Automotive ESSEX U-400HV or equivalent

(6) Apply a bead of adhesive as shown in below.
CAUTION:
Apply adhesive after the primer dried (approx. after 10 minutes).

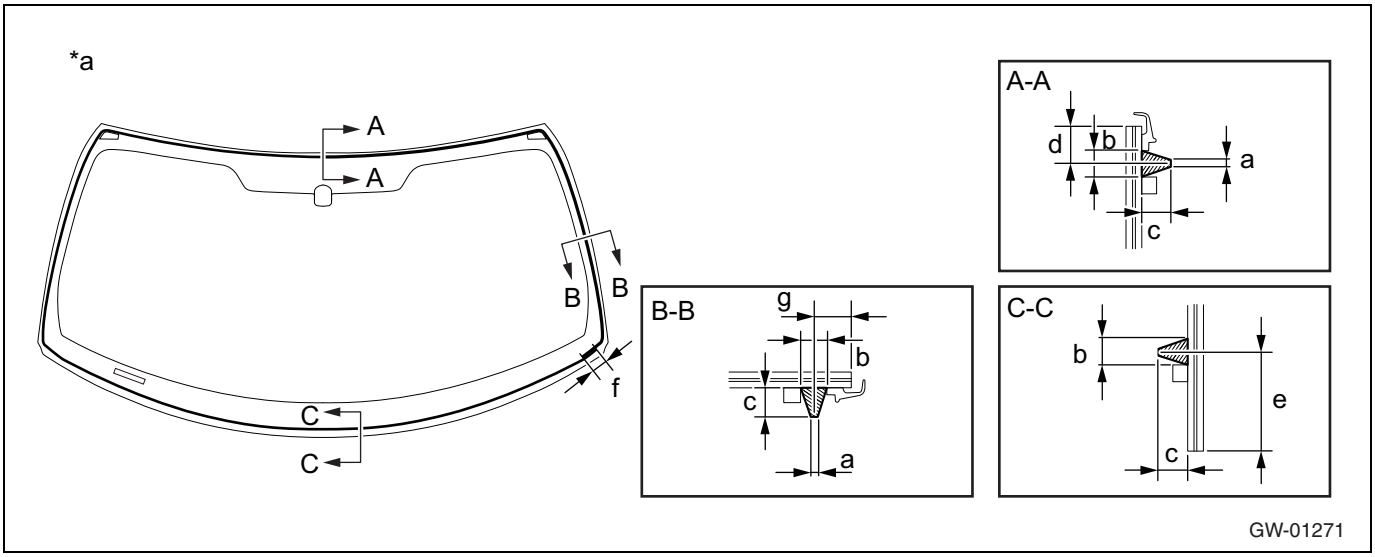

Captions in illustration

*a	Backside of the windshield glass	-	-
	Adhesive	-	-

Standard value

Part	Dimension
a	2.0 mm {0.079in}
b	8.0 mm {0.315in}
c	9.0 mm {0.354in}
d	11.3 mm {0.445in}
e	22.0 mm {0.866in}
f	30.0 mm {1.181in}
g	10.8 mm {0.425in}

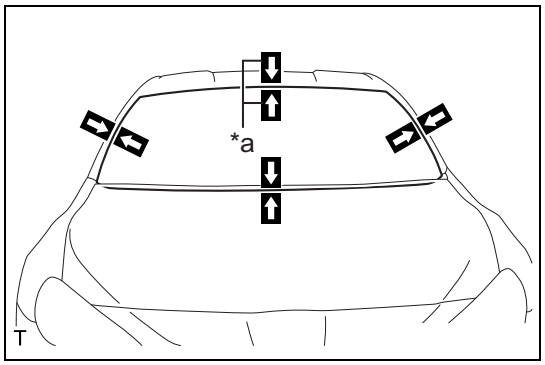

(7) Installation of windshield glass

(a) Holding the suction rubbers, position the alignment marks and install the windshield glass.

Captions in illustration

*a	Alignment marks

CAUTION:

- After body side primer is dried (approx. 10 minutes), attach the windshield glass .
- From inside the vehicle, check that windshield glass stoppers and body are engaged.

(b) Lightly press the front side of the windshield glass to fit tightly.

NOTE:

Pressing force: 98 N {10 kgf} {22.0 lbf} or more

(c) Using protection tapes or similar tapes, hold the windshield glass until the adhesive cures completely.

NOTE:

For minimum drying time or waiting time after the cure of adhesive, consult the instruction or manual of each adhesive supplier.

7. Leak test and repair
   (1) After the adhesive cure, pour water over the vehicle and make sure no water leak inside.
   (2) If any water leak is found, fill the three cement black after the drying.
   (3) Remove the applied protective tape and packing tape.

8. Installation of roof head lining ASSY
   (1) Install the roof head lining ASSY front side (parts). (Refer to IT - 56)
9. Installation of the cowl ventilator louver (Refer to WW - 14)
10. Installation of the front fender to cowl side seal LH
11. Installation of the front fender to cowl side seal RH
    NOTE:
    Install the part in the same manner as LH side.
12. Installation of the front wiper arm & blade ASSY RH (Refer to WW - 16)
13. Installation of the front wiper arm & blade ASSY LH (Refer to WW - 15)
14. Installation of the wiper arm head caps (Refer to WW - 16)

Back window glass

Exploded view

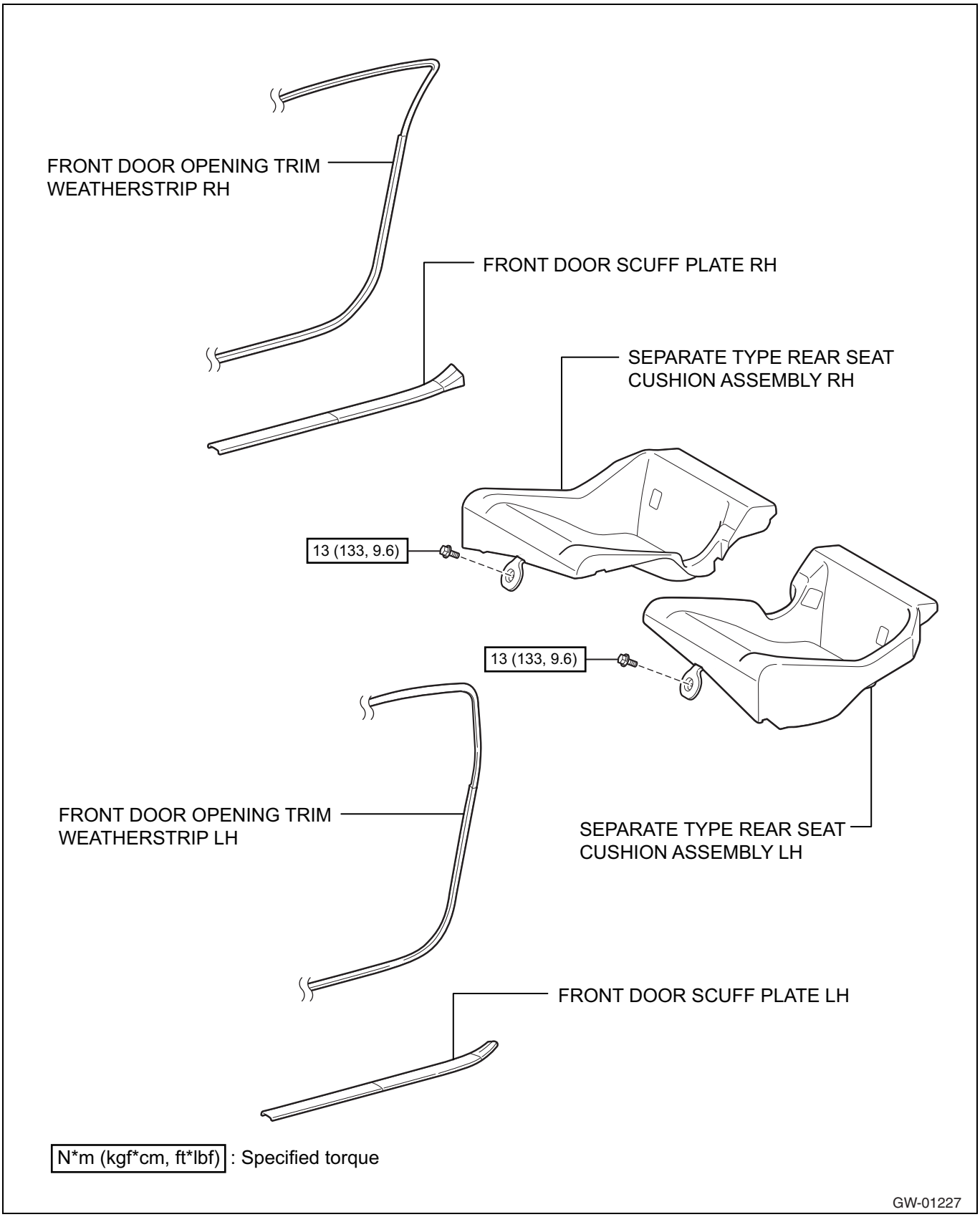

WS

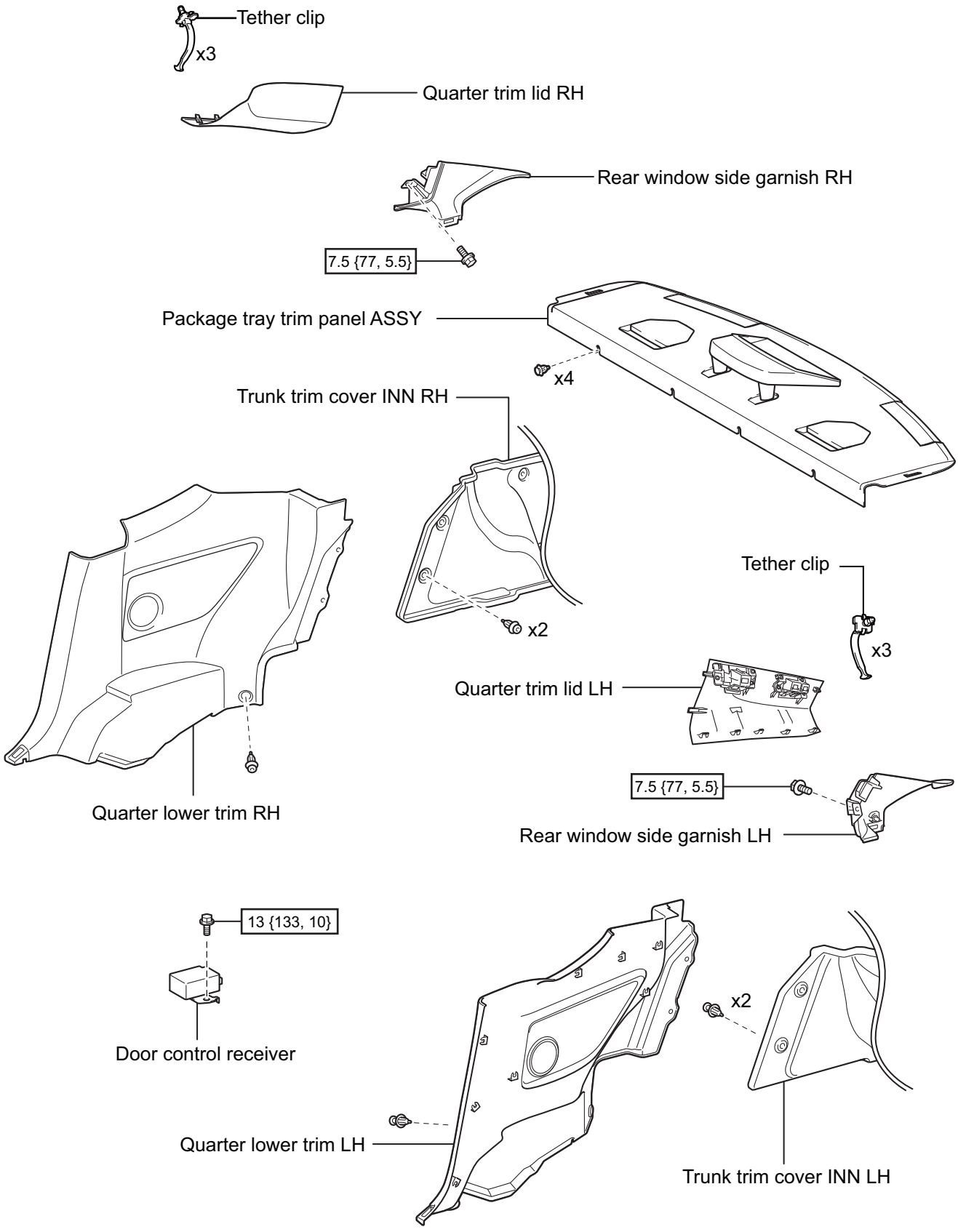

N*m {kgf*cm, ft*lbf}: Tightening torque

EI-10379

WS

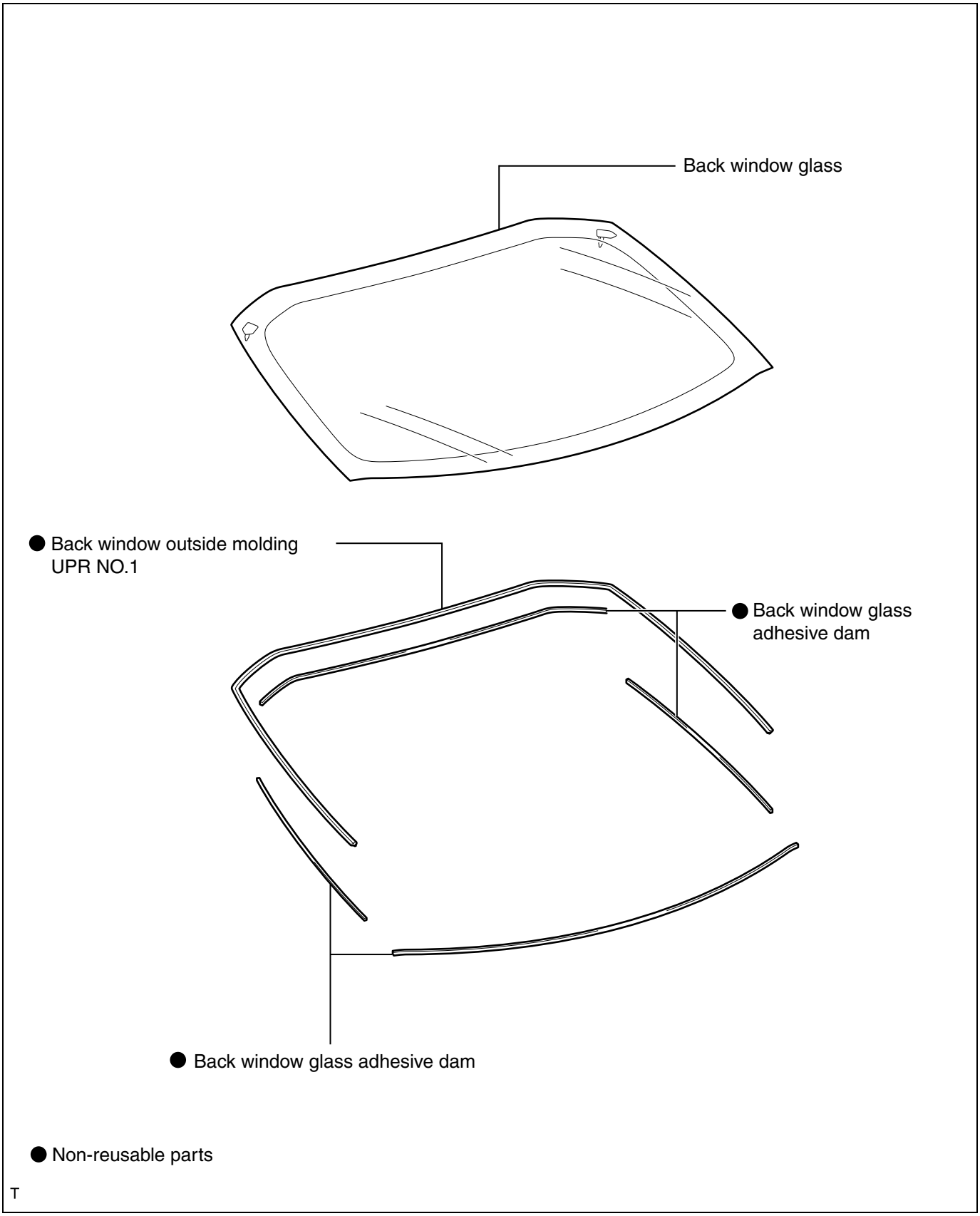

T

Removal

1. Removal of separate type rear seat cushion ASSY LH (Refer to SE - 31)

2. Removal of separate type rear seat cushion ASSY RH
   NOTE:
   Perform operation following the same procedure as LH side.
3. Removal of the front door scuff plate RH (Refer to IT - 48)
4. Removal of front door scuff plate LH
   NOTE:
   Perform the same procedures as RH side.
5. Disconnection of front door opening trim weather strip RH (Refer to SB - 26)
6. Disconnection of the front door opening trim weather strip LH
   NOTE:
   Perform the same procedures as RH side.
7. Disconnection of trunk trim cover INN RH (Refer to IT - 49)
8. Disconnection of trunk trim cover INN LH
   NOTE:
   Perform the same procedures as RH side.
9. Removal of quarter lower trim RH (Refer to IT - 49)
10. Removal of quarter lower trim LH
    NOTE:
    Perform the same procedures as RH side.
11. Removal of quarter trim lid RH (Refer to IT - 49)
12. Removal of quarter trim lid LH
    NOTE:
    Perform the same procedures as RH side.
13. Removal of the rear window side garnish RH (Refer to IT - 50)
14. Removal of the rear window side garnish LH
    NOTE:
    Perform the same procedures as RH side.
15. Removal of package tray trim panel ASSY (Refer to DL - 111)
16. Removal of back window glass
    CAUTION:
    - The back window glass stopper is installed on the back window glass. Be careful not to damage the back window glass.
    - Work with the windshield knife or piano wire according to cut location and/or condition.
    - Use the suction rubber to keep back window glass in place from outside to avoid dropping the back window glass during operation.

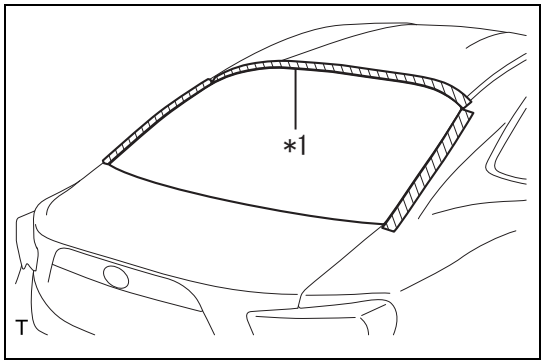

(1) Apply protective tape to the body side of the circumference of back window glass.

Captions in illustration

*1	Protective tape

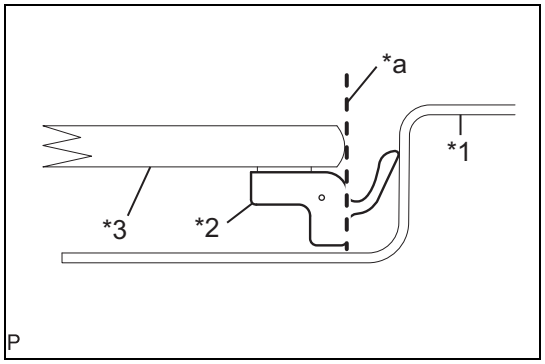

(2) Using the cutter knife, cut the back window outside molding UPR No. 1.
CAUTION:
- Do not damage the back window glass and the body surface.
- If the body surface is damaged, remove the back window glass, and then perform the rust prevention treatment.

Captions in illustration

*1	Body
*2	Molding
*3	Back window glass
*a	Cut

(3) Pull the back window outside molding UPR No. 1 by hand to detach.

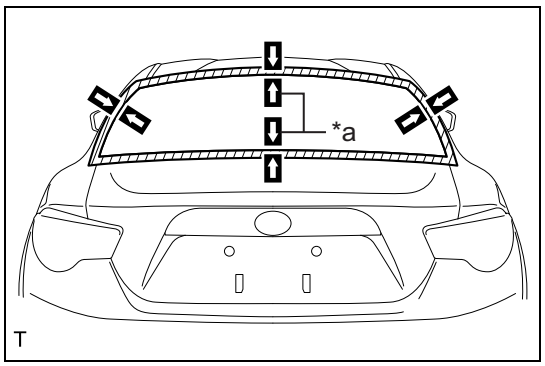

(4) When the back window glass is reused.
(a) Attach gummed tapes or similar tapes on the back window glass and body panel, and put alignment marks on them with a pen for reinstallation.

Captions in illustration

*a	Alignment marks

(5) Disconnect the defogger connector.
(6) Attach the suction rubber onto the back window glass.

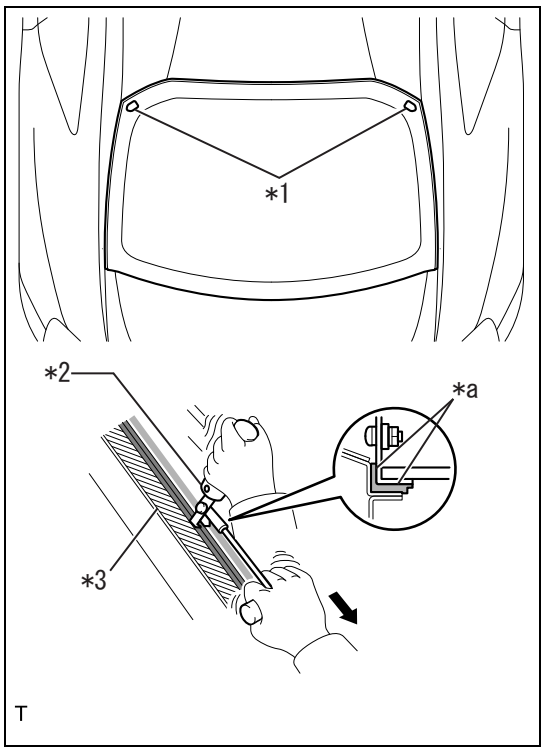

(7) When using the windshield knife
(a) Apply sufficient amount of soapy water to the adhesive section.
(b) Insert the windshield knife into the adhesive section.
(c) Using the windshield knife, insert the blade between the back window glass and the vehicle body, and move the knife along the edge of the glass to cut adhesive while keeping the blade at right angle with the edge.
CAUTION:
- Never twist the windshield glass knife.
- Do not damage the back window glass.

NOTE:
Begin from where the back window glass and the body is most distant.

Captions in illustration

*1	Back window glass stopper
*2	Windshield knife
*3	Protective tape
*a	Align with the glass

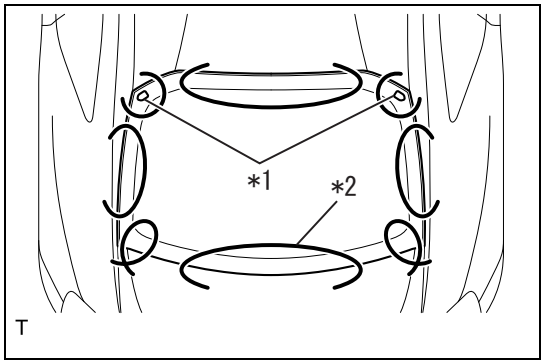

(8) When using piano wire
(a) Using an air drill, make a hole in the adhesive section and pass the piano wire through the hole.
(b) Pass the piano wire (0.6 mm {0.024 in} is recommended) through the point shown in the figure, attach both ends of the wire to wooden boards.
(c) Pull the piano wire both ways and cut the adhesive on the back window glass.
CAUTION:
- Do not tightly contact the piano wire against the back window glass edge.
- When working around the air bag, do not damage it with the piano wire.
- Make sure do not cross the piano wires. Otherwise, they can be cut.

Captions in illustration

*1	Back window glass stopper
*2	Piano wire

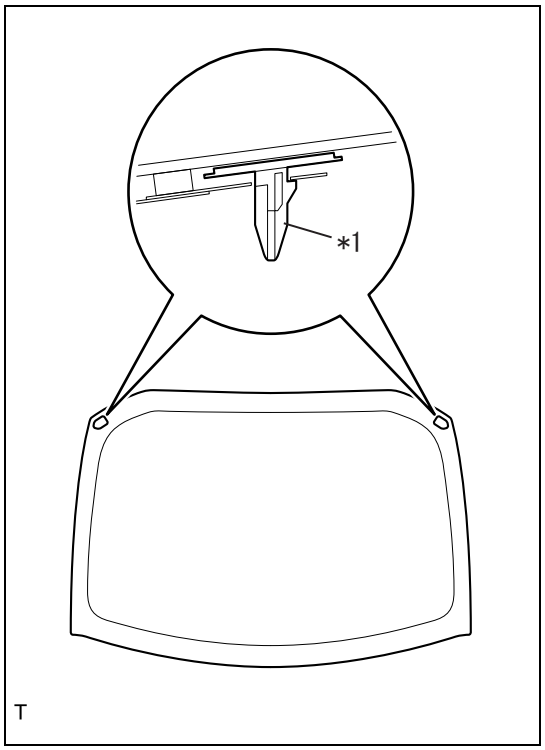

(9) Hold the suction rubbers, release the 2 tabs of the back window glass stopper, then remove the back window glass.
CAUTION:
- The back window glass stopper is installed in the position shown on the back window glass figure. Be careful not to damage the back window glass.
- Work with the windshield knife or piano wire according to cut location and/or condition.
- Use the suction rubber to keep back window glass in place from outside to avoid dropping the back window glass during operation.

Captions in illustration

*1	Back window glass stopper

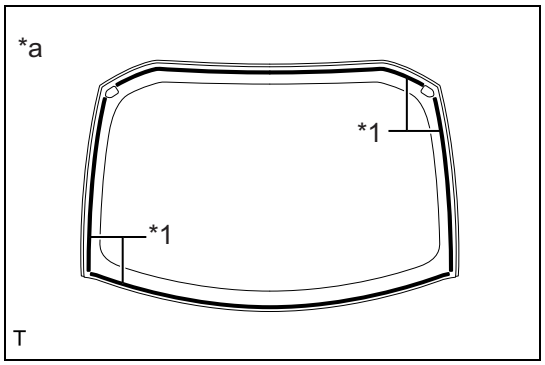

17. Removal of back window glass adhesive dam
(1) When the back window glass is reused.
(a) Using the scraper, remove the back window glass adhesive dam.
CAUTION:
- Do not damage the back window glass.
- The back window glass dam kit must be replaced by a new one.

Captions in illustration

*1	Back window glass adhesive dam
*a	Backside of the back window glass

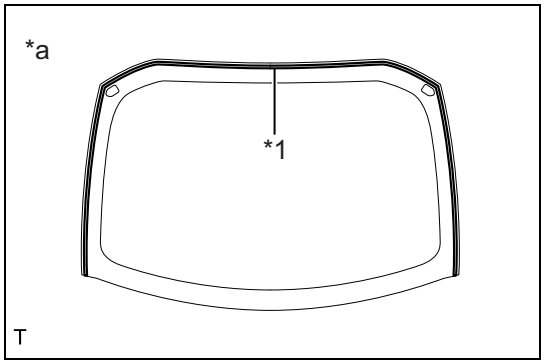

18. Removal of back window outside molding UPR No. 1
    (1) When the back window glass is reused.
        (a) Using the scraper, remove the back window outside molding UPR No. 1.
        CAUTION:
        - Do not damage the back window glass.
        - The back window outside molding UPR No. 1 must be replaced by a new one.

Captions in illustration

*1	Back window outside molding UPR No. 1
*a	Backside of the back window glass

Installation

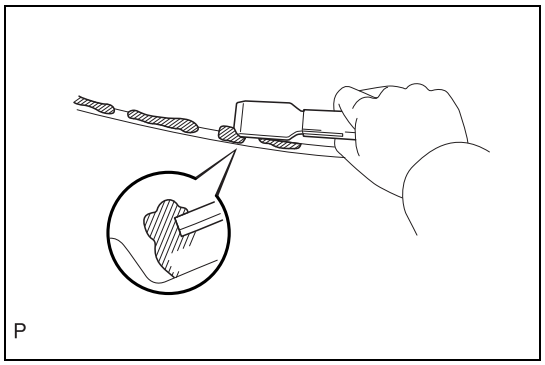

1. Cleaning of back window glass
    (1) When the back window glass is reused.
        (a) Using a scraper or similar tool, remove the adhesive and/or back window glass adhesive dam remaining on the back window glass.
        CAUTION:
        Do not damage the back window glass.
    (2) Using the appropriate cleaner, clean the rim of the back window glass.
        CAUTION:
        New back window glass also requires to be cleaned.
    (3) Apply primer to mounting surface on the back window glass for the back window outside molding UPR No 1.
        Primer : 3M N-200, Sunstar #GP402, or equivalent
        CAUTION:
        Do not apply the primer thickly.
    (4) Fit the back window outside molding UPR No. 1 to the both sides of the back window glass.

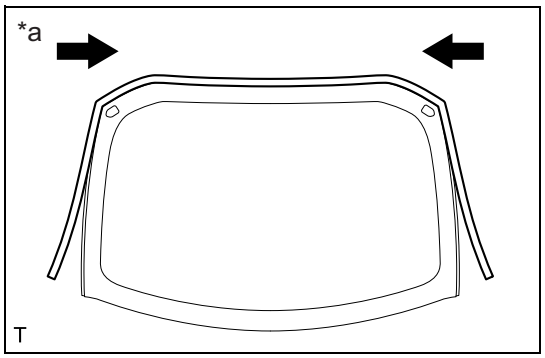

    (5) Using a roller, crimp the back window outside molding UPR NO.1 in the direction specified by the arrows in the figure.
        CAUTION:
        - Be careful to attach the back window outside molding UPR NO.1 firmly so that there is no loose part.
        - Attach the back window outside molding UPR NO.1 after the primer dried (approx. 10 minutes).

Captions in illustration

*a	Backside of the back window glass

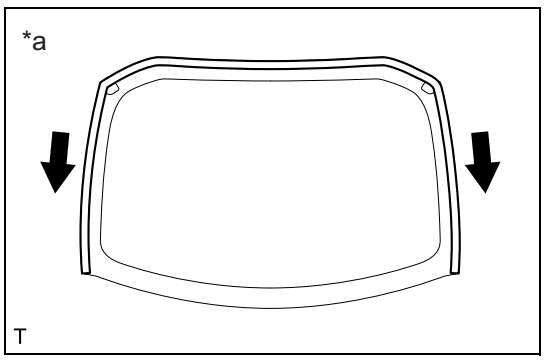

    (6) Using a roller, crimp the back window outside molding UPR NO.1 in the direction specified by the arrows in the figure.
        CAUTION:
        - Be careful to attach the back window outside molding UPR NO.1 firmly so that there is no loose part.
        - Attach the back window outside molding UPR NO.1 after the primer dried (approx. 10 minutes).

Captions in illustration

*a	Backside of the back window glass

2. Installation of back window glass adhesive dam
    (1) Using the appropriate cleaner, clean the installation surface of the back window glass adhesive dam.

(2) Attach new back window glass adhesive dam onto the place of backside of the back window glass where indicated in the figure.

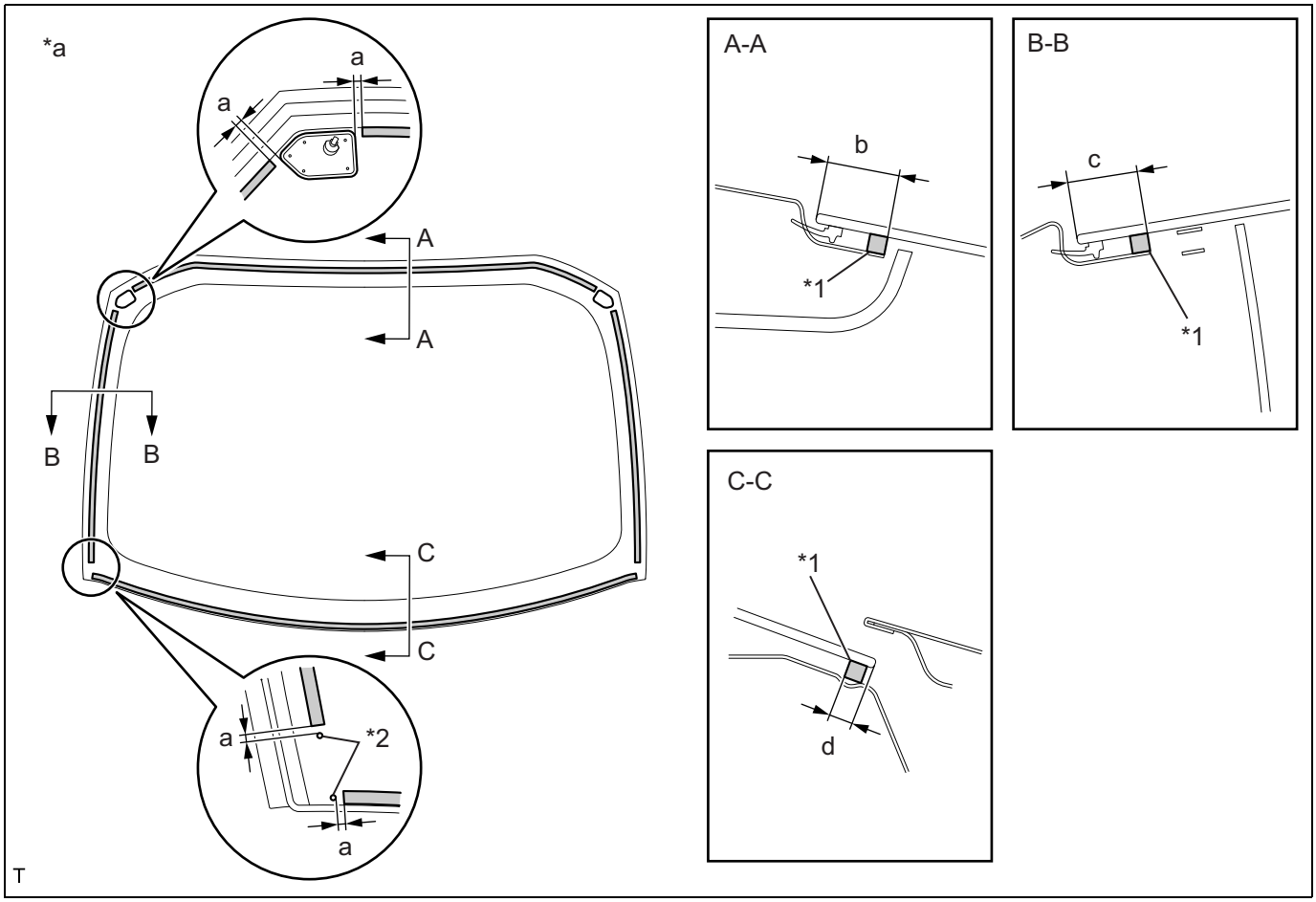

Captions in illustration

*1	Back window glass adhesive dam	*2	Ceramic cutout
*a	Backside of the back window glass	-	-

Standard value

Part	Dimension
a	3.0 mm {0.118 in} or less
b	19.9 to 21.9 mm {0.783 to 0.862 in}
c	18.9 to 20.9 mm {0.744 to 0.823 in}
d	6.0 to 8.0 mm {0.236 to 0.315 in}

3. Installation of back window glass

(1) Cleaning of mounting surface of the body

(a)Remove the adhesive layer on the body using cutter knife or similar tool to obtain smooth surface of 2 mm {0.08 in} thick.

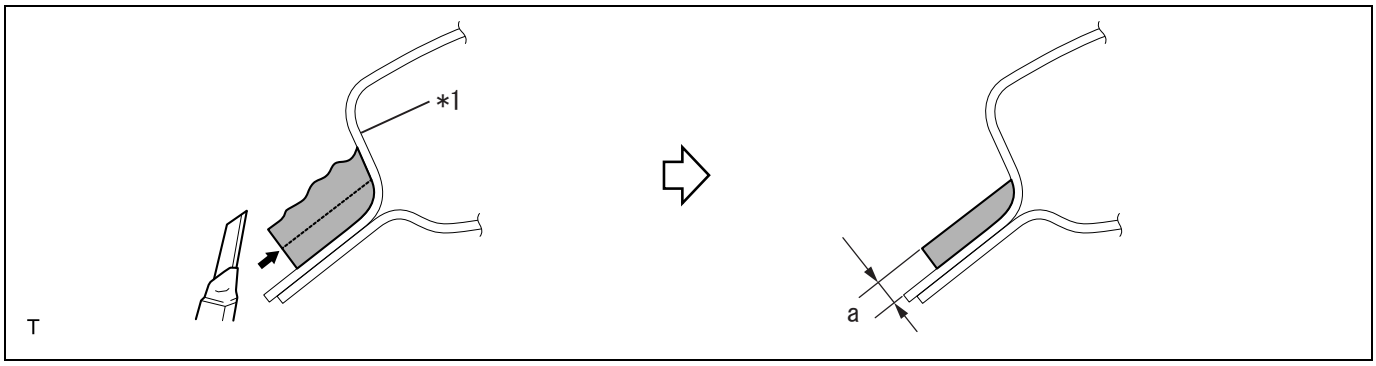

CAUTION:
- Do not damage the body.
- Always leave a little amount of adhesive.

Captions in illustration

*1	Body	-	-
	Adhesive	-	-

Standard value

Part	Dimension
a	2.0 mm {0.079in}

(b)Using the appropriate cleaner, clean the body installation surface.

(2) Preliminary operation for back window glass installation

(a)Attach the suction rubber onto the back window glass.

(b)Temporarily place the back window glass on the body, and set it so that the upper and side sections for the back window glass become equal in width (consistent clearance between body and back window glass edge).

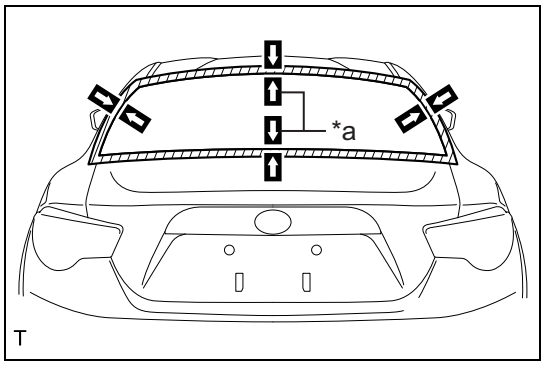

(c)Attach packing tapes or similar tapes on the back window glass and body panel, and put alignment marks on them with a pen for reinstallation. (When new back window glass is used.)

CAUTION:

From inside the vehicle, check that the back window glass stoppers and the body are engaged.

NOTE:

When back window glass will be reused, check and correct the position of the alignment marks.

Captions in illustration

*a	Alignment marks

(d)Detach the back window glass.

(e)Apply primer on the body surface.

Primer : The Dow Automotive U-413 or equivalent

CAUTION:

Do not apply the primer thickly.

(f) Apply primer onto backside of the back window glass, where indicated in the figure.

Primer : The Dow Automotive U-401, U-402 or equivalent

CAUTION:

Do not apply the primer thickly.

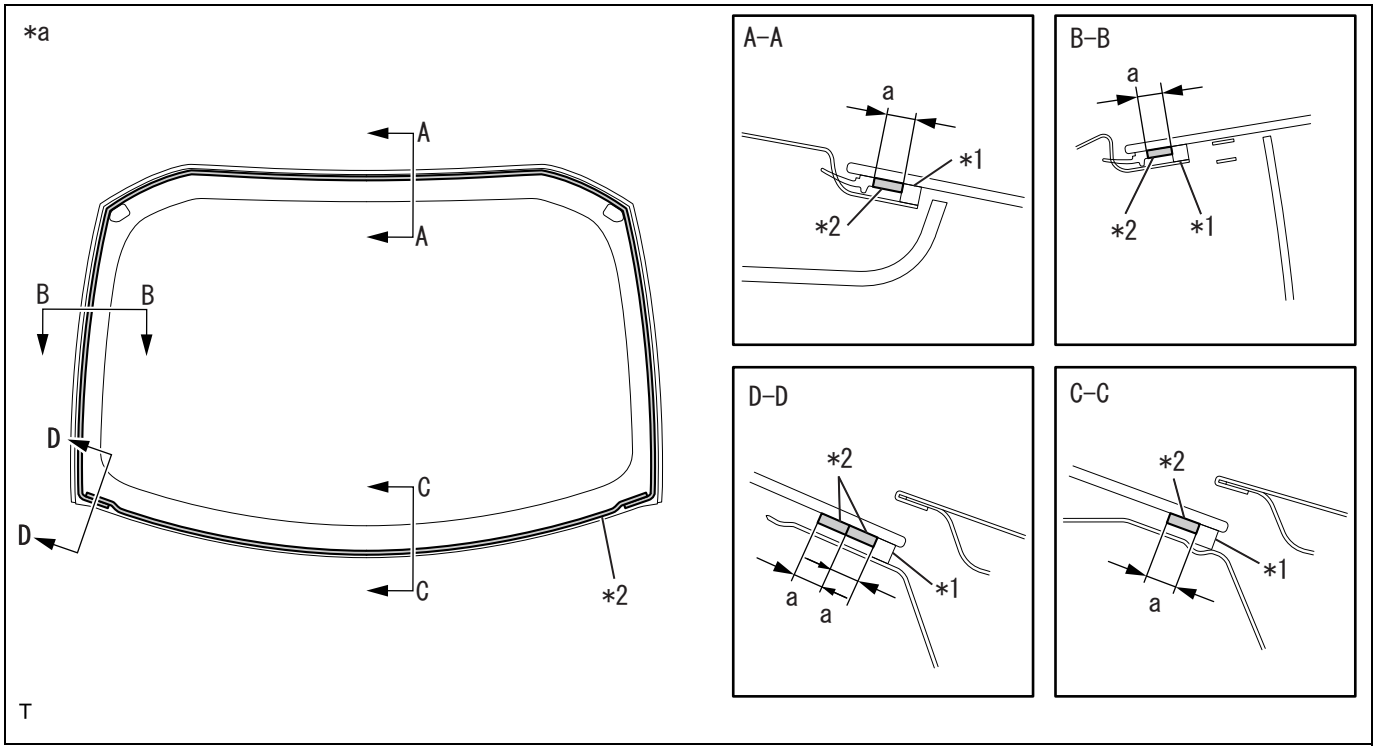

Captions in illustration

*1	Back window glass adhesive dam	*2	Primer
*a	Backside of the back window glass	-	-

Standard value

Part	Dimension
a	8.0 mm {0.315in}

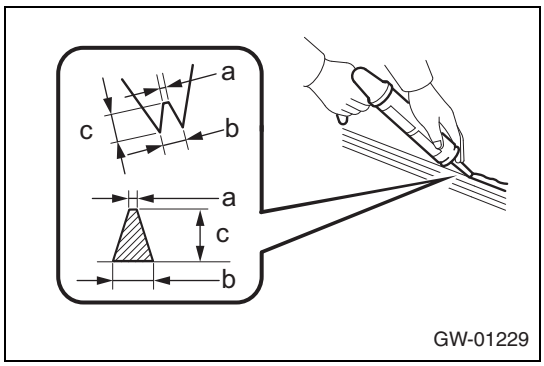

(g)Cut the tip of the adhesive nozzle, as shown in the figure.

Standard value

Part	Dimension
a	2.0 mm {0.079in}
b	8.0 mm {0.315in}
c	9.0 mm {0.354in}

(h)Set the adhesive into the sealant gun.

Adhesive : The Dow Automotive ESSEX U-400HV or equivalent

(i) Apply a bead of adhesive as shown in the figure.

WS

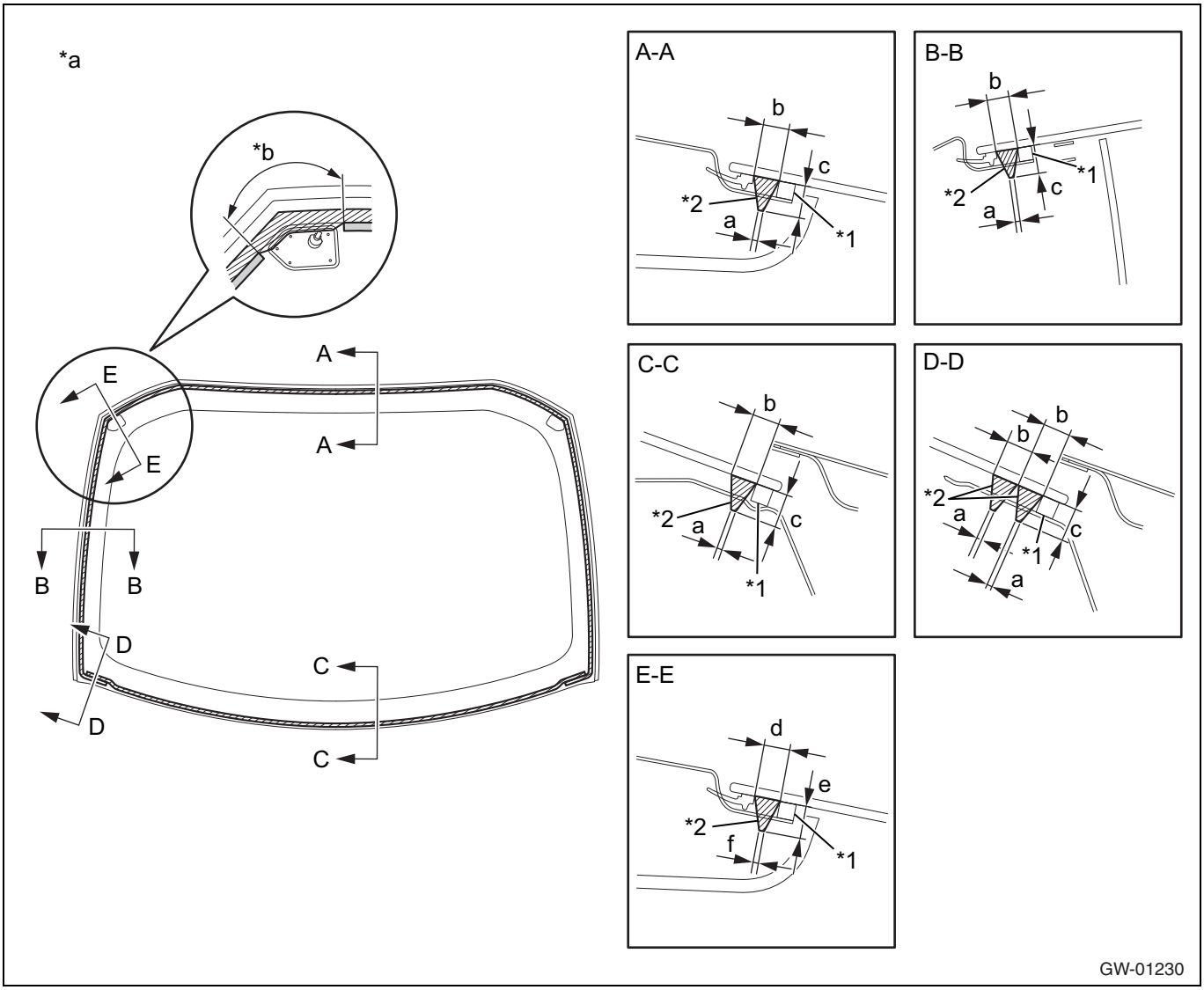

Captions in illustration

*1	Back window glass adhesive dam	*2	Adhesive
*a	Backside of the back window glass	*b	Extra adhesive area

WS

Standard value

Part	Dimension
a	2.0 mm {0.079in}
b	8.0 mm {0.315in}
c	9.0 mm {0.354in}
d	9.8 mm {0.386in}
e	11.1 mm {0.437in}
f	2.5 mm {0.098in}

CAUTION:
Apply adhesive after the primer dried (approx. after 10 minutes).

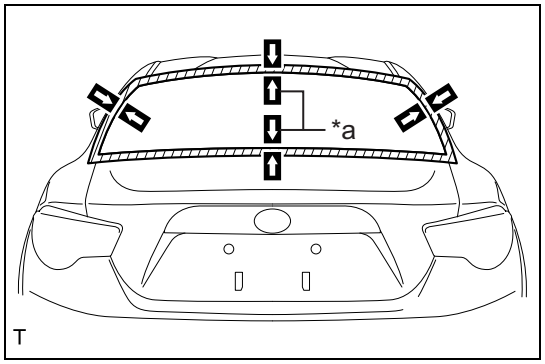

(3) Installation of back window glass

(a) Using the suction rubbers, position the alignment marks and install the back window glass.

Captions in illustration

*a	Alignment marks

CAUTION:
From inside the vehicle, check that the back window glass stoppers and the body are engaged.

(b) Lightly press the front side of the back window glass to fit completely.
NOTE:
Pressing force: 98 N {10 kgf} {22.0 lbf} or more

(c) Using a spatula, remove or add adhesive if any excess and/or shortage is found.

(d) Remove excess adhesive before cure.

(e) Using protection tapes or similar tapes, hold the back window glass until the adhesive cures completely.
NOTE:
For minimum drying time or waiting time after the cure of adhesive, consult the instruction or manual of each adhesive supplier.

(4) Connect the defogger connector.

4. Leak test and repair
   (1) After the adhesive cure, pour water over the back window glass from outside of the vehicle and make sure no water leak inside.
   (2) If any water leak is found, fill the three cement black after the drying.
   (3) Remove the applied protective tape and packing tape.
5. Installation of package tray trim panel ASSY (Refer to DL - 112)
6. Installation of the rear window side garnish RH (Refer to IT - 57)
7. Installation of rear window side garnish LH
   NOTE:
   Perform the same procedures as RH side.
8. Installation of the quarter trim lid RH (Refer to IT - 57)
9. Installation of quarter trim lid LH
   NOTE:
   Perform the same procedures as RH side.
10. Installation of the quarter lower trim RH (Refer to IT - 58)
11. Installation of quarter lower trim LH
    NOTE:
    Perform the same procedures as RH side.
12. Installation of trunk trim cover INN RH (Refer to IT - 58)
13. Installation of the trunk trim cover INN LH
    NOTE:
    Perform the same procedures as RH side.
14. Installation of the front door opening trim weather strip LH (Refer to IT - 58)
15. Installation of front door opening trim weather strip RH
    NOTE:
    Perform operation following the same procedure as LH side.
16. Installation of the front door scuff plate RH (Refer to IT - 58)
17. Installation of front door scuff plate LH
    NOTE:
    Perform the same procedures as RH side.
18. Installation of separate type rear seat cushion ASSY LH (Refer to SE - 39)

19. Installation of separate type rear seat cushion ASSY RH
    NOTE:
    Perform operation following the same procedure as LH side.

Window defogger system

Function inspection

1. Operation inspection of rear window defogger
   (1) When the customize function is set to the normal drive mode
      (a) Turn the ignition switch to ON.
      (b) Make sure the indicator light illuminates and the back door glass (window defogger) warms up when the defogger switch is pushed.
      (c) Make sure the indicator light turns off and the window defogger operation stops after approx. 15 minutes.
   (2) When the customize function is set to the continuous drive mode *1
      (a) Turn the ignition switch to ON.
      (b) Make sure the indicator light illuminates and the back door glass (window defogger) warms up when the defogger switch is pushed.
      (c) Make sure that approx. 15-min. operation and 2-min. stop are repeated.
      *1: For automatic air conditioning system

Parts location

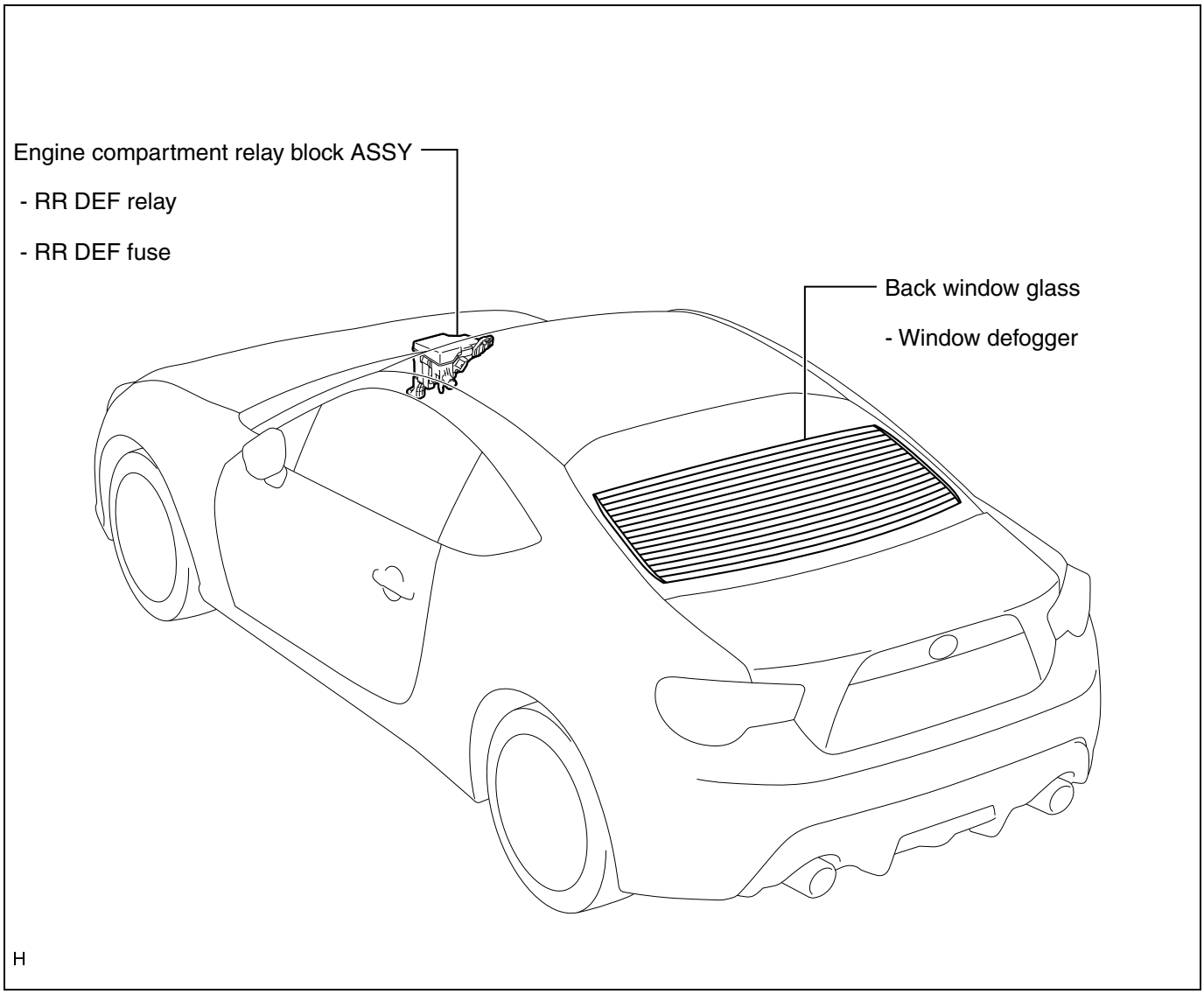

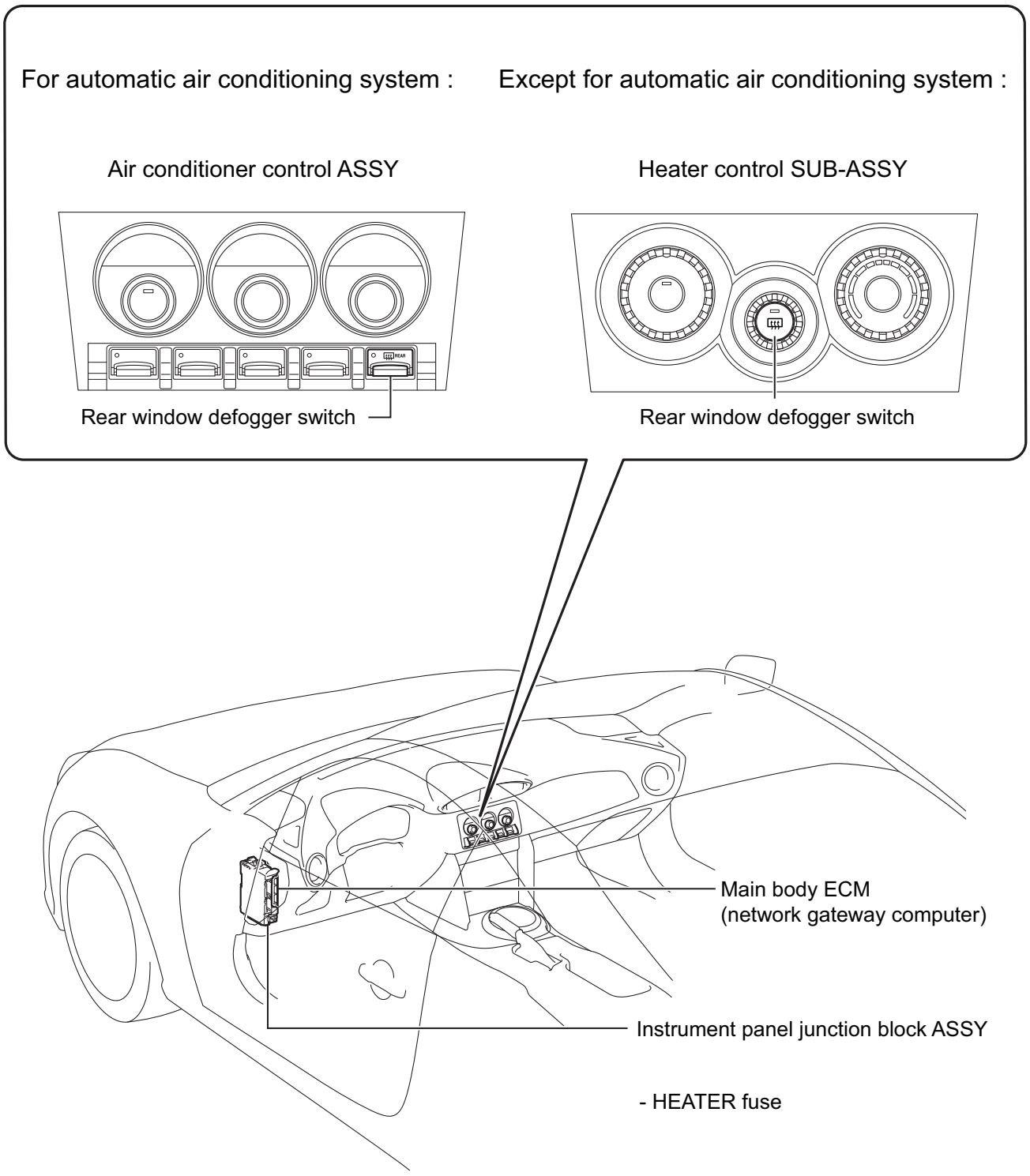
For automatic air conditioning system :
Except for automatic air conditioning system :
Air conditioner control ASSY
Heater control SUB-ASSY
Rear window defogger switch
Rear window defogger switch
Main body ECM
(network gateway computer)
Instrument panel junction block ASSY
- HEATER fuse
GW-10137

Symptom table

For automatic air conditioning system

Symptoms	Inspection items	Reference pages
Window defogger does not operate	Refer to troubleshooting flowchart "Window defogger does not operate".	WS - 96

Except for automatic air conditioning system

Symptoms	Inspection items	Reference pages
Window defogger does not operate (Indicator light illuminates).	DEF fuse	WS - 87
	DEF relay	WS - 113
	Back door glass (window defogger)	-
	Vehicle wiring harness and connector	-
Window defogger does not operate (Indicator light turns off).	HEATER fuse	WS - 87
	Heater control ASSY (defogger switch)	AC - 174
	Vehicle wiring harness and connector	-

How to troubleshoot

1	Bring in the car

Next

2	Interview and phenomenon check

(1) Perform the interview and phenomenon check (Refer to WS - 91)

Next

3	Check vehicle status

(1) Check the vehicle specification.

Result

Result	Go to
For automatic air conditioning system	A
Except for automatic air conditioning system	B

B → Go to Step 5.

A

4	Inspection of CAN communication system

(1) Check CAN communication system. (Refer to NW - 30)

Result

Result	Go to
Functioning properly	A
Not functioning properly	B

B → Go to the CAN communication system section (Refer to NW - 30)

A

5	Symptom table

(1) Check the symptom table. (Refer to WS - 89)

Result

Result	Go to
Not applicable to the symptom table.	A
Applicable to the symptom table.	B

B → Go to Step 7.

A

6	Based on the trouble phenomenon, perform troubleshooting following the steps below.

(1) Function inspection (Refer to WS - 87)
(2) ECM terminal arrangement (Refer to WS - 94)
(3) Data monitor / active test*1 (Refer to WS - 18)
*1: For automatic air conditioning system

Next

7	Adjustment, repair, or replacement

Next

8	Confirmation test

Next

Complete

Check list for interview

Window Defogger System Diagnosis Checklist for Interview

Year/date of vehicle bring-in Year Month Date

Name		Registration No.	First registration Year Month Date
		Vehicle model	Frame No.
Front	Engineer	Engine type	Odometer reading km
Customer specified content			

Date when trouble occurred (from when)	Year Month Date Time		
Frequency of occurrence	Continuous Sometimes (times/day, times/month)		
Condition of trouble occurrence	Yes / No		
Weather	Fine / Cloudy / Rainy / Snowy / Other ( )	Temperature	Approx. ( ) °C
Road	Inner city Suburbs Highway Others ( )	Paved road / Unpaved road	
Trouble symptom	☐ Window defogger dose not operate		
	☐ Others ( )		
Conditions for normal recovery	☐ When IG ON ☐ When engine starts ☐ When ( ) switch is operated		

WS

customize function

1. Customization of window defogger system
   (1) Customization using the SSM4

(a)Connect the SSM4 to the DLC3 and turn the ignition to IG ON.
(b)From [Each System] on the SSM4 display screen, select [Body Control] →[Customize] to customize the settings.

Display name	Initial setting	Contents	Setting	Controller ECM
[Rr Defogger op. mode]	Normal	Rear defogger operation drive mode setting	Normal *1 / Continuous *2	Main body ECM (Network gateway computer)

- *1: Rear defogger operation is turned OFF after 15 minutes.
- *2: Rear defogger repeats 15-min. operation and 2-min. stop.

Circuit figure

For automatic air conditioning system:

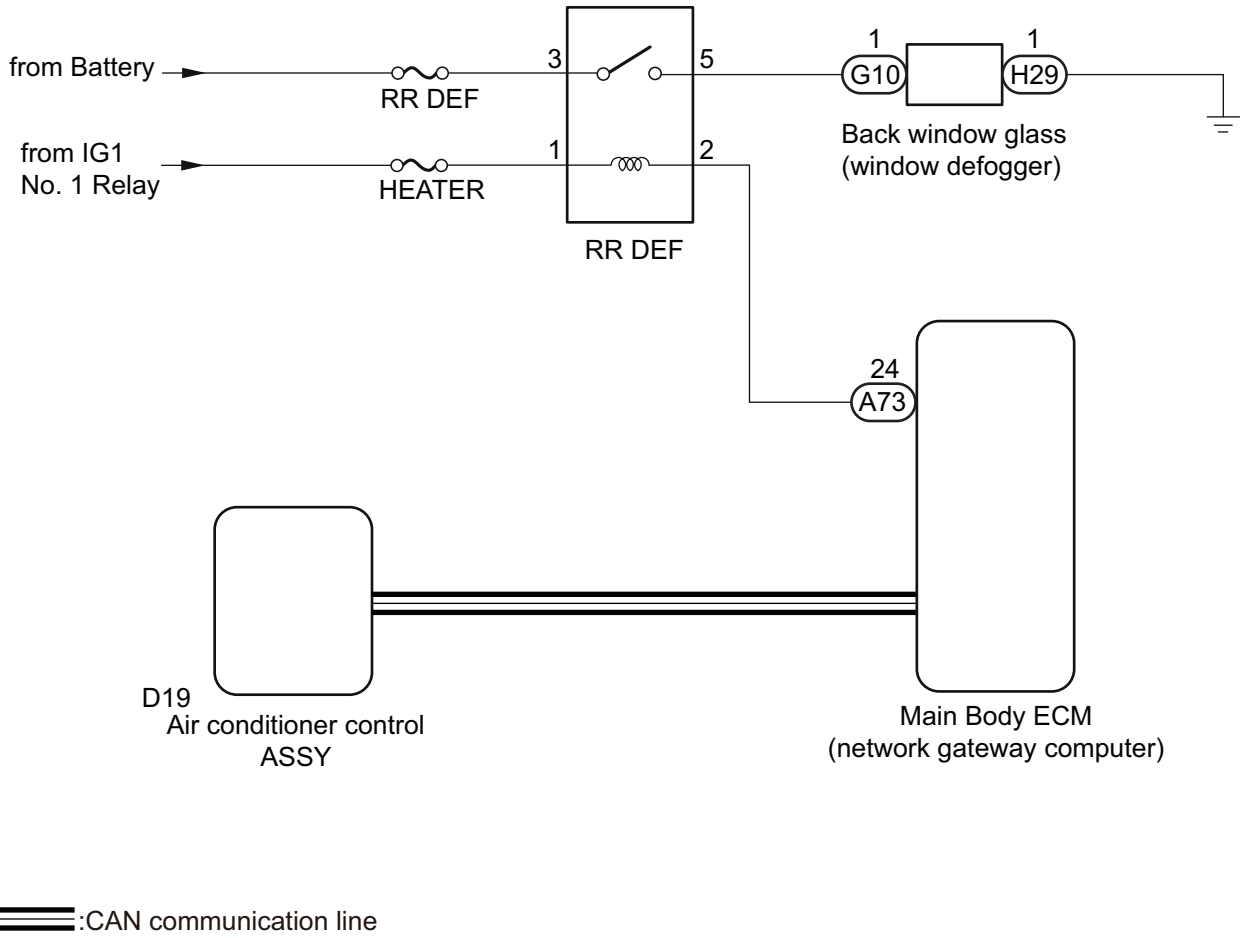

WS

Except for automatic air conditioning

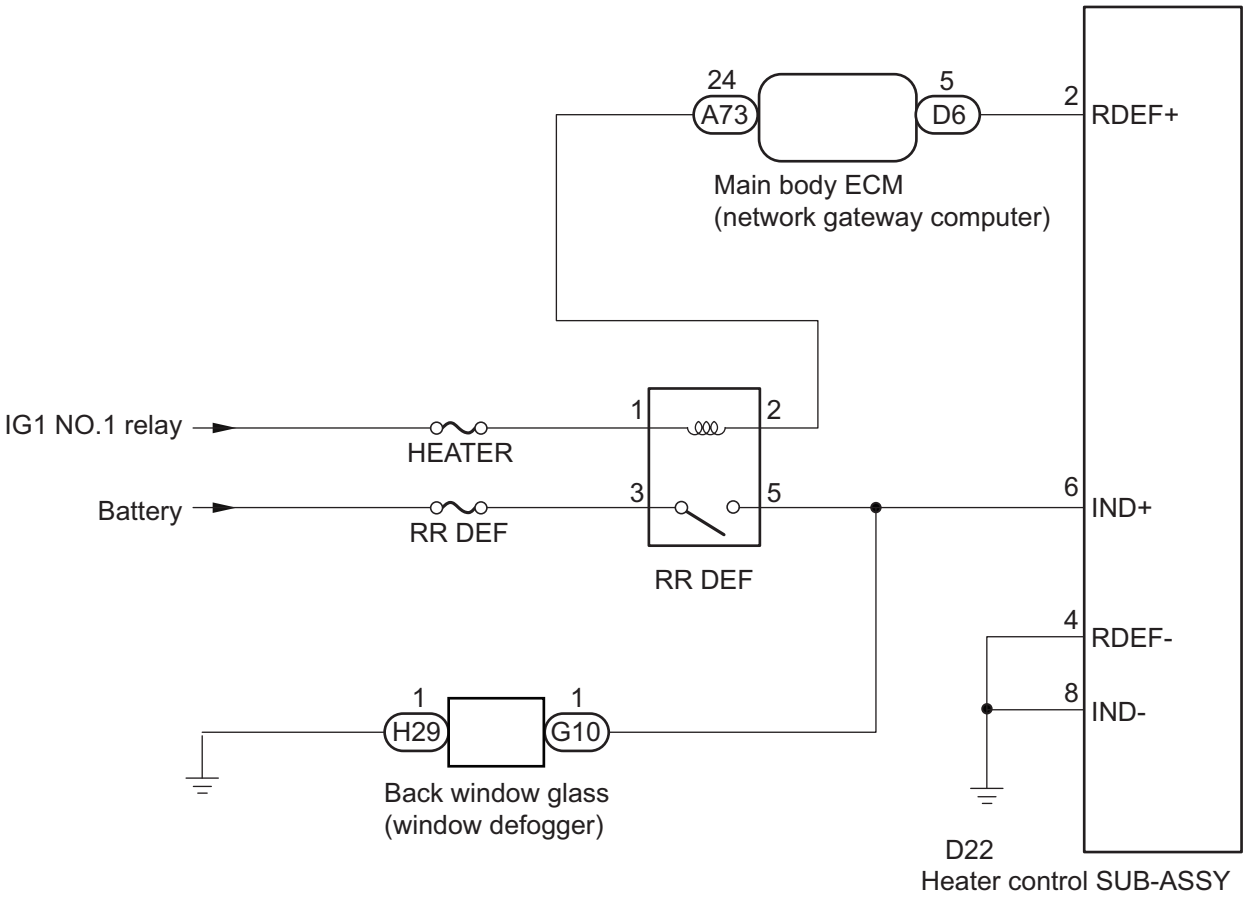

GW-10409

ECM terminal arrangement

1. Instrument panel junction block ASSY, main body ECM (Network gateway computer)

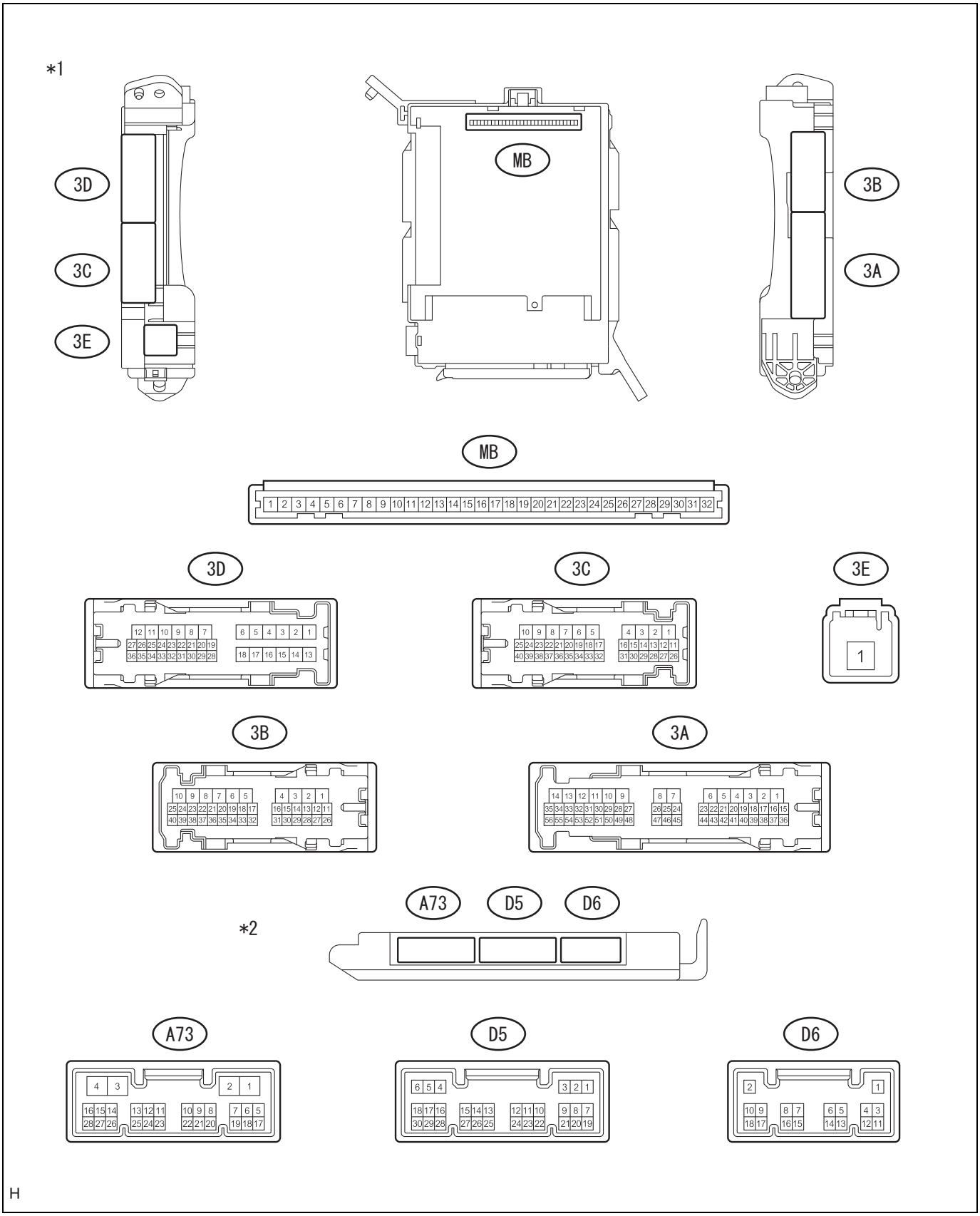

Captions in illustration

*1	Instrument panel junction block ASSY	*2	Main body ECM (Network gateway computer)

(1) Inspection of the instrument panel junction block ASSY and the main body ECM (network gateway computer)

(a)Measure the voltage between the terminals.

Standard value

Terminal No. (Terminal symbol)	Inspection conditions	Standard value
A73-24 ←→chassis ground	IG ON	11 to 14 V
D5-22 (ACC) ←→chassis ground*	ACC ON	11 to 14 V

*: When there is a smart entry & start system

NOTE:

If it is outside the standard values, the vehicle is defective.

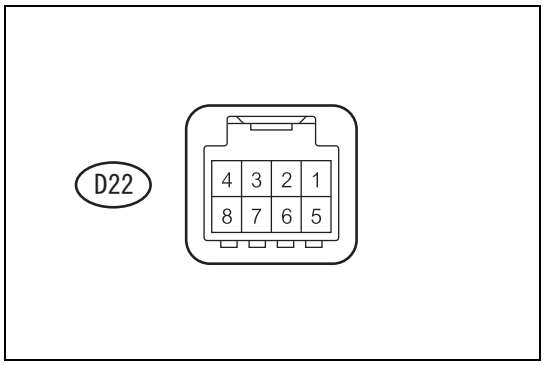

2. Heater control SUB-ASSY (Rear window defogger switch) (except for automatic air conditioning system)
   (1) Disconnect the connector D22 of the heater control SUB-ASSY (Rear window defogger switch).
   (2) Measure the voltage and resistance between terminals.

Standard value

Terminal No. (Terminal symbol)	Inspection conditions	Standard value
D22-2 (IND+) ←→D22-4 (RDEF-)	Always	11 to 14 V
D22-4 (RDEF-) ←→chassis ground	Always	Less than 1 Ω

   (3) Connect the connector D22 of the heater control SUB-ASSY (Rear window defogger switch).
   (4) Measure the voltage between the terminals.

Standard value

Terminal No. (Terminal symbol)	Inspection conditions	Standard value
D22-6 (IND+) ←→D22-4 (RDEF-)	IG ON Defogger switch OFF →ON	11 to 14 V →1 V or less

Data monitor / active test

1. Inspection with SSM4
   (1) Data monitor
      (a)Use the SSM4 and [Data monitor] to determine functionality and narrow down the defective part.

WS

SSM4 screen: [Each System] →[Body Control] →[Data monitor]

Item name	Description/display range	Normal value	Remarks
[Rr Defogger op. mode]	Rear defogger operation status/ Display range: Normal - Continuous*	Normal: OFF after 15 minutes Continuous: 15-min. operation and 2-min. stop are repeated.	-
[Rear Defogger SW Input]	Rear defogger switch status/ Display range: ON-OFF	-	-
[Rear defogger]	Rear defogger output status/ Display range: ON-OFF	-	-

*: For automatic air conditioning system

SSM4 screen: [Each System] →[Air Conditioner] →[Data monitor]

Item name	Description/display range	Normal value	Remarks
[Rear defogger relay]	Rear defogger relay status/ Display range: ON-OFF	-	-

   (2) Active test
      (a)Use the SSM4 to conduct an [Active Test] and determine functionality and narrow down the defective part.

SSM4 screen: [Each System] →[Body Control] →[Active Test]

Item name	Drive
[Rear defogger]	Rear defogger output ON / OFF

SSM4 screen: [Each System] →[Power Window] →[Active Test]

Item name	Drive
[P seat power window UP/DOWN]	UP / DOWN

Window defogger does not operate

Description of functions

When IG is ON, operating the rear window defogger switch turns on the rear window defogger.

Except for automatic air conditioning system

Rear window defogger control is performed by the main body ECM (network gateway computer). When the switch ON signal is received, RR DEF relay operates for 15 minutes. When the switch OFF signal is received within 15 minutes, operation of DEFOG relay stops.

For automatic air conditioning system

Rear window defogger control is performed by the main body ECM (network gateway computer). When the switch ON signal is transmitted from the air conditioner control ASSY through the CAN communication to the main body ECM (network gateway computer), RR DEF relay operates for 15 minutes. When the switch OFF signal is received within 15 minutes, operation of RR DEF relay stops.

Circuit figure

For automatic air conditioning system:

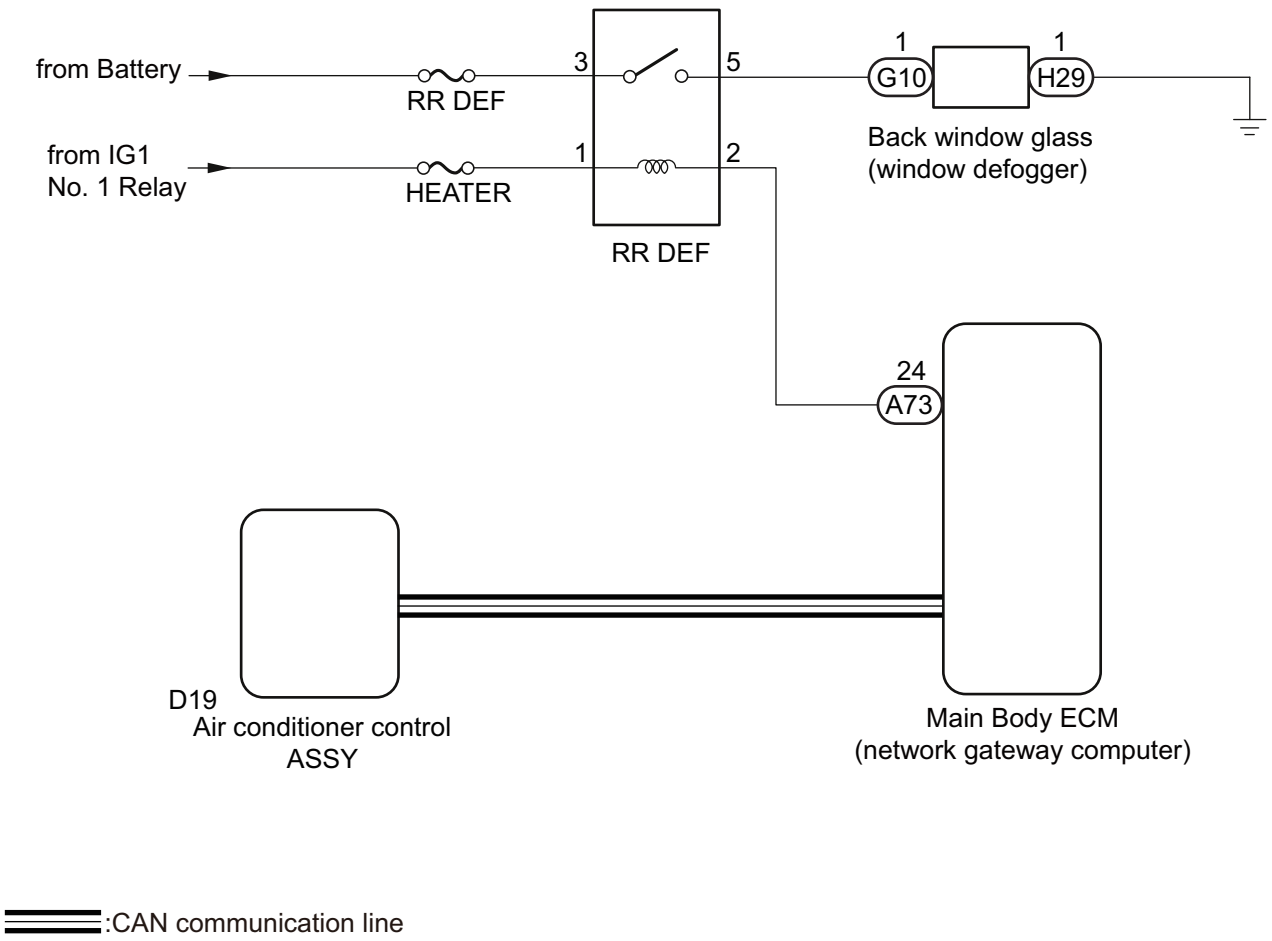

Except for automatic air conditioning

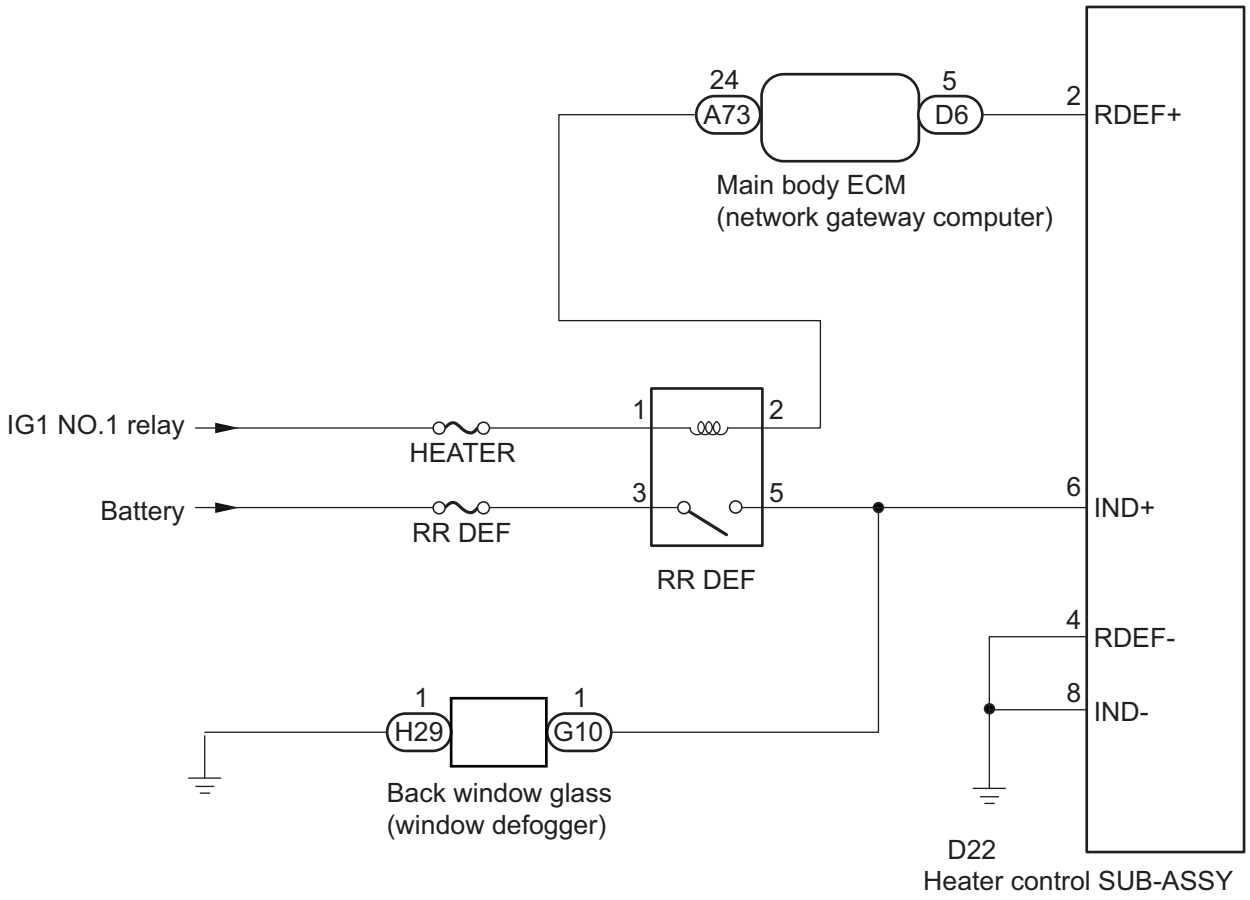

GW-10409

Inspection steps

WS

WARNING:

- Window defogger system uses CAN communication. First, perform a “Communication function inspection”, following “How to troubleshoot”, and after checking for any malfunction in the communication system, you can proceed with troubleshooting.
- Before performing the troubleshooting, check the fuse of this circuit.

1	Implementation of SSM4 active test (Rr defogger output)

(1) Using SSM4, perform an [Active Test] by following the display.

SSM4 screen: [Each System] →[Body Control] →[Active Test]

Item name	Contents of testing	Constraints
[Rear defogger]	Rear defogger output ON / OFF	-

Result

Result	Go to
Window defogger is not activated.	A
Window defogger is activated.	B

B	Perform the circuit test shown on the symptom table. (Refer to WS - 89)

A

2	Unit inspection of defogger relay (RR DEF relay)

(1) Perform unit inspection of the defogger relay (RR DEF relay). (Refer to WS - 113)

NG → Replacement of defogger relay (RR DEF relay)

OK

3	Inspection of wire harness and connector (defogger relay - IG 1 No. 1 relay and battery)

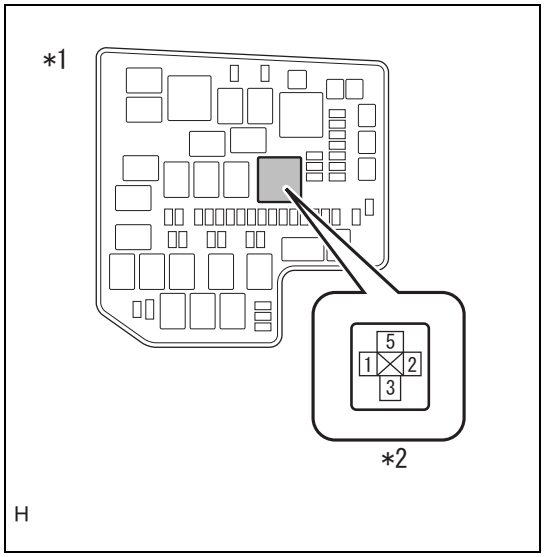

(1) Detach the defogger relay (RR DEF relay) from the engine compartment relay block.
(2) Measure the voltage between the terminals.

Voltage

Inspection terminals	Inspection conditions	Standard value
1 - Chassis ground	IG ON	11 to 14 V
3 - Chassis ground	Always	11 to 14 V

Captions in illustration

*1	Engine compartment relay block
*2	Defogger relay (RR DEF relay) holder

NG → Repair or replacement of wiring harness or connector

OK

4	Inspection of wire harness and connector (defogger relay - main body ECM (network gateway computer))

(1) Detach the defogger relay (RR DEF relay) from the engine compartment relay block.
(2) Disconnect the A73 connector of the main body ECM (network gateway computer).
(3) Measure the resistance between the terminals.

Resistance

Inspection terminals	Inspection conditions	Standard value
2 - A73-24	Always	Less than 1 Ω
2 - Chassis ground	Always	10 kΩ or more

Result

Item	Go to
NG	A
OK (except for automatic air conditioning)	B
OK (for automatic air conditioning system)	C

WS

B → Go to Step 5.

C → Go to Step 7.

A

Repair or replacement of wiring harness or connector

5	Inspection of wire harness and connector (main body ECM (network gateway computer) - heater control SUB-ASSY)

(1) Disconnect the connector D6 for the main body ECM (network gateway computer).
(2) Disconnect the connector D22 of the heater control SUB-ASSY.
(3) Measure the resistance between the terminals.

Resistance (open circuit check)

Inspection terminals (Terminal symbol)	Inspection conditions	Standard value
D6-5 - D22-2 (RDEF+)	Always	Less than 1 Ω

Resistance (short circuit check)

Inspection terminals	Inspection conditions	Standard value
D6-5 - Chassis ground	Always	10 kΩ or more

NG → Repair or replacement of wiring harness or connector

OK

6	Unit inspection of heater control SUB-ASSY (Rear defogger switch)

(1) Detach heater control SUB-ASSY (Rear defogger switch) (Refer to AC - 174)
(2) Perform unit inspection of heater control SUB-ASSY (Rear defogger switch) (Refer to AC - 179)

NG → Replacement of rear defogger switch

OK

7	Inspection of wire harness and connector (back window glass - defogger relay and chassis ground)

(1) Disconnect the connectors G10 and H29 for the back window glass.
(2) Detach the defogger relay (RR DEF relay) from the engine compartment relay block.
(3) Measure the resistance between the terminals.

Resistance (open circuit check)

Inspection terminals	Inspection conditions	Standard value
G10-1 - 5	Always	Less than 1 Ω

WS

Resistance (short circuit check)

Inspection terminals	Inspection conditions	Standard value
G10-1 - Chassis ground	Always	10 kΩ or more
H29-1 - Chassis ground	Always	Less than 1 Ω

NG → Repair or replacement of wiring harness or connector

OK

Replacement of the back window glass (Refer to WS - 76)

Quarter window

Exploded view

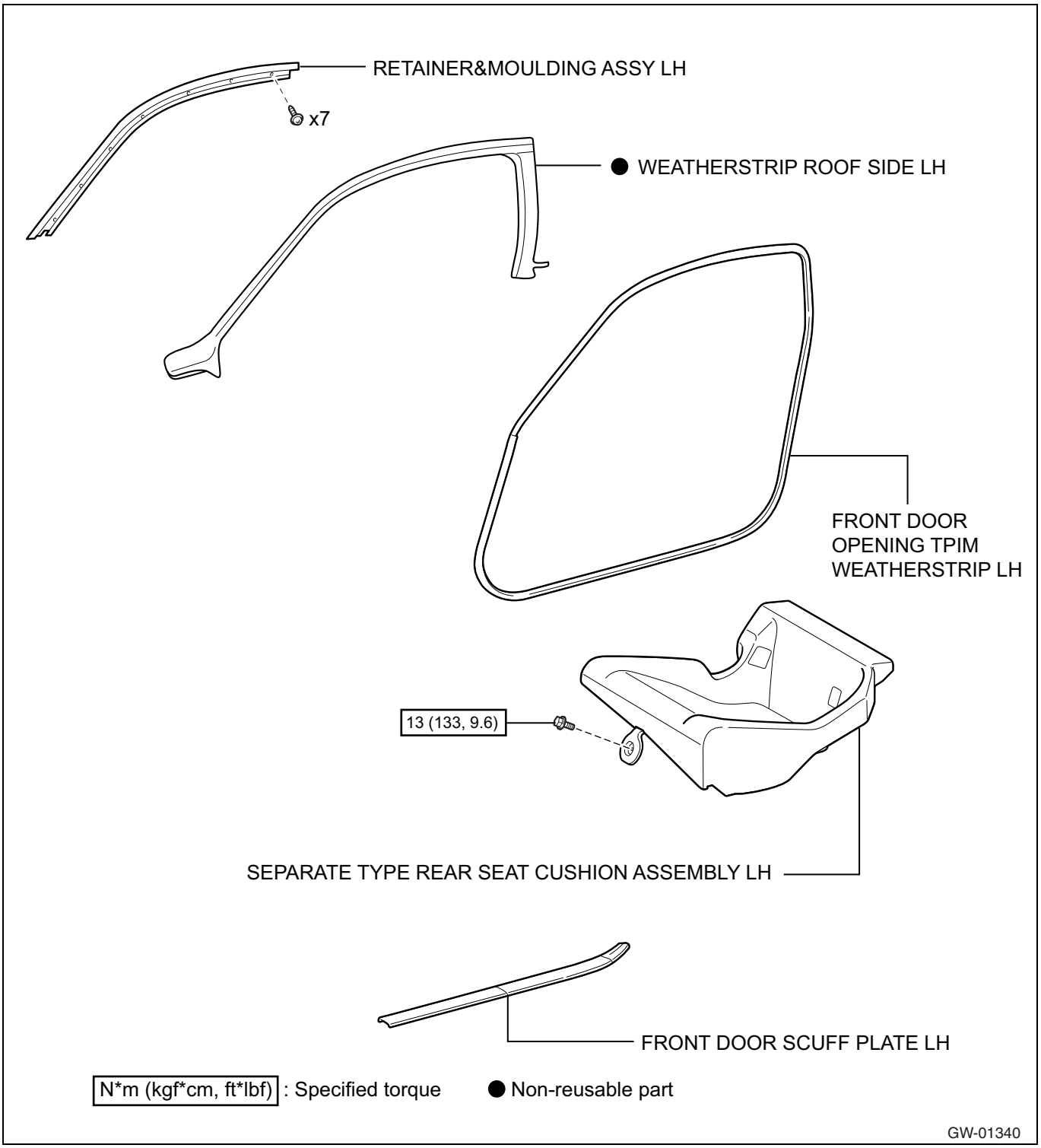

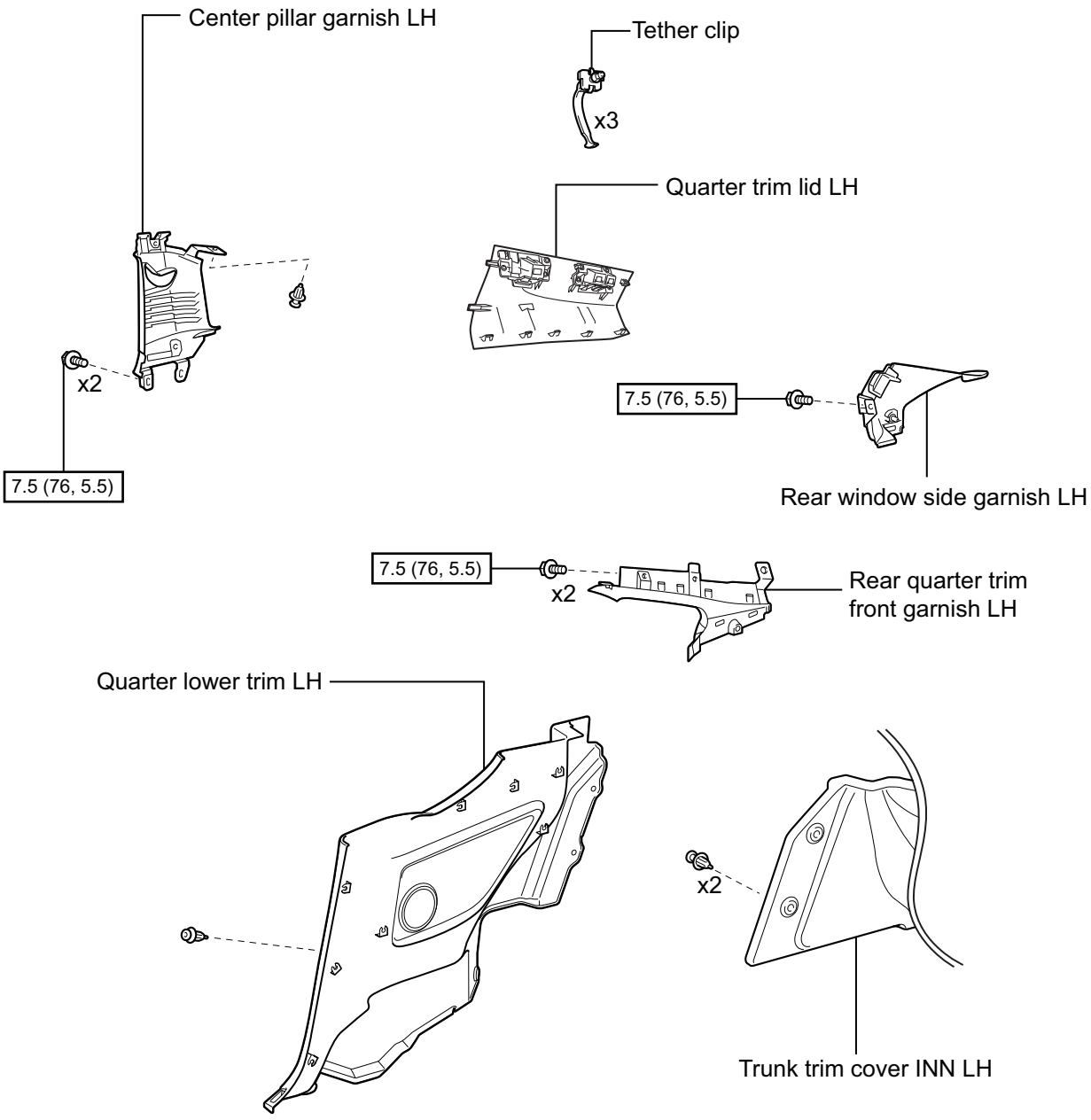

N*m (kgf*cm, ft*lbf) : Specified torque

EI-10378

WS

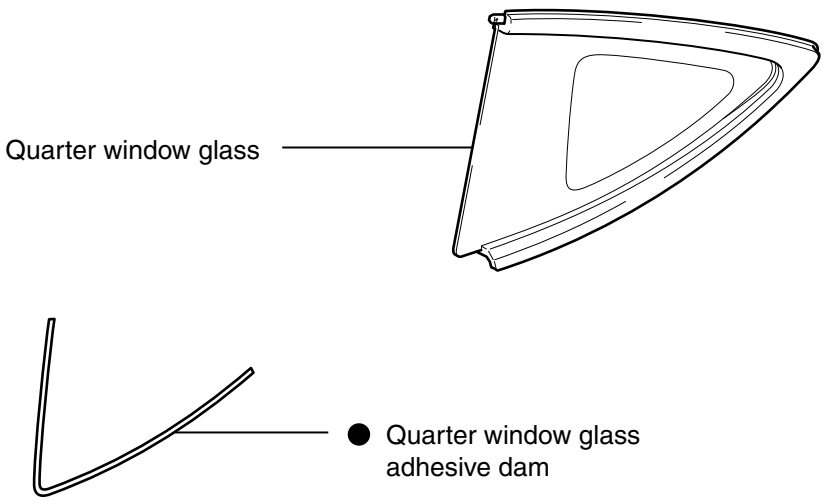

● Non-reusable parts

T

Removal

NOTE:

The following procedure is for LH side. Perform the same procedures both for the LH side and RH side, unless otherwise specified.

1. Removal of separate type rear seat cushion ASSY LH
   NOTE:
   Perform the same procedures as RH side. (Refer to SE - 31)
2. Disconnection of front seat outer belt ASSY LH
   NOTE:
   Perform the same procedures as RH side. (Refer to SB - 26)
3. Removal of front door scuff plate LH
   NOTE:
   Perform the same procedures as RH side. (Refer to IT - 48)
4. Disconnection of the front door opening trim weather strip LH
   NOTE:
   Perform the same procedures as RH side. (Refer to IT - 48)
5. Removal of the trunk trim cover INN LH
   NOTE:
   Perform the same procedures as RH side. (Refer to IT - 49)
6. Removal of quarter lower trim LH
   NOTE:
   Perform the same procedures as RH side. (Refer to IT - 49)
7. Removal of quarter trim lid LH
   NOTE:
   Perform the same procedures as RH side. (Refer to IT - 50)
8. Removal of the rear window side garnish LH
   NOTE:
   Perform the same procedures as RH side. (Refer to IT - 50)
9. Removal of quarter rear trim garnish FR LH
   NOTE:
   Perform the same procedures as RH side. (Refer to IT - 51)

WS

10. Removal of center pillar garnish LH
    NOTE:
    Perform the same procedures as RH side. (Refer to IT - 51)

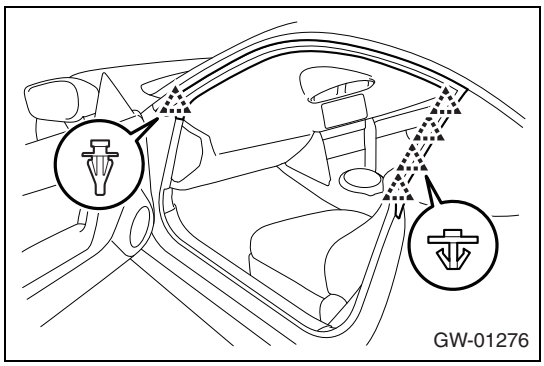

11. Removal of the weather strip roof side LH
    (1) Release the 5 clips and manually pull the weather strip roof side LH to remove it.
    CAUTION:
    Be sure to replace the weather strip roof side with a new one.

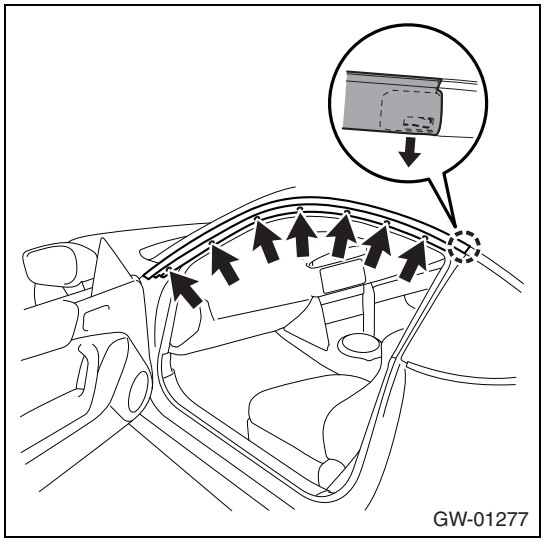

12. Removal of the retainer & molding ASSY LH
    (1) Remove 7 screws.
    (2) Release the tab, and remove the retainer & molding ASSY.
    CAUTION:
    When performing removal or installation, wear protective equipment.

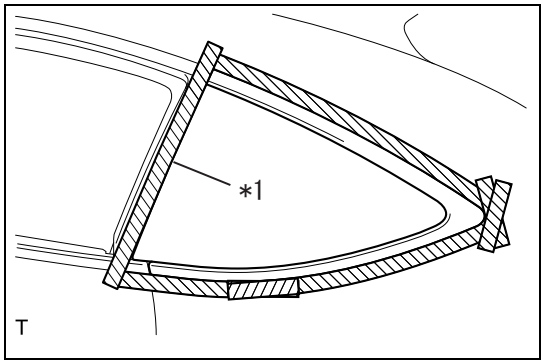

13. Removal of quarter window glass
    (1) Apply protective tape to the body surface of the circumference of quarter window glass.

Captions in illustration

*1	Protective tape

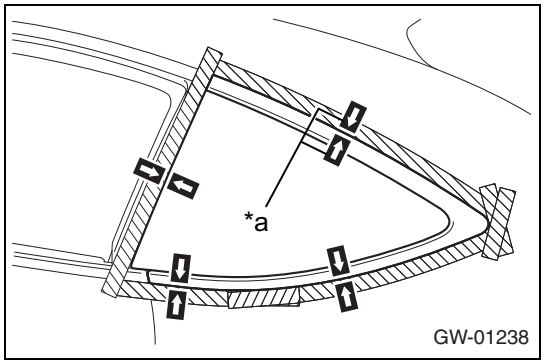

    (2) When the quarter window glass is reused.
        (a)Apply packing tapes or similar tapes on the quarter window glass and body panel, and put alignment marks on them with a pen for reinstallation.

Captions in illustration

*a	Alignment marks

    (3) Attach the suction rubber onto the quarter window glass.

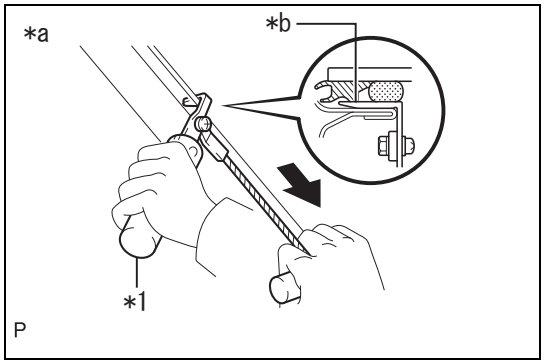

(4) When using the windshield knife
(a) Apply sufficient amount of soapy water to the adhesive section.
(b) Insert the windshield knife into the adhesive section.
(c) Using the windshield knife, insert the blade between the quarter window glass and the vehicle body, and move the knife along the edge of the glass to cut adhesive while keeping the blade at right angle with the edge.
CAUTION:
- Never twist the windshield glass knife.
- Do not damage the quarter window glass.

NOTE:
Begin from where the quarter window glass and the body is most distant.

Captions in illustration

*a	Passenger compartment side
*b	Align with the body
*1	Windshield knife

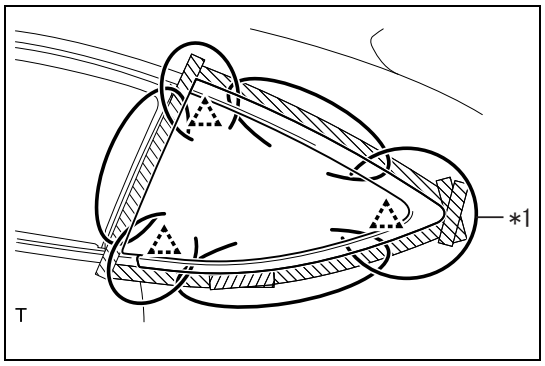

(5) When using piano wire
(a) Pass the piano wire (0.6 mm {0.024 in} is recommended) through the point shown in the figure, attach both ends of the wire to wooden boards.
(b) Pull the wire ends alternately to cut off the adhesive section, leaving the quarter window clip.
CAUTION:
- Do not tightly contact the piano wire against the quarter window glass edge.
- Make sure do not cross the piano wires. Otherwise, they can be cut.

NOTE:
Even when using the piano wire, using the windshield knife is easier to cut on the upper side of the glass.

Captions in illustration

*1	Piano wire

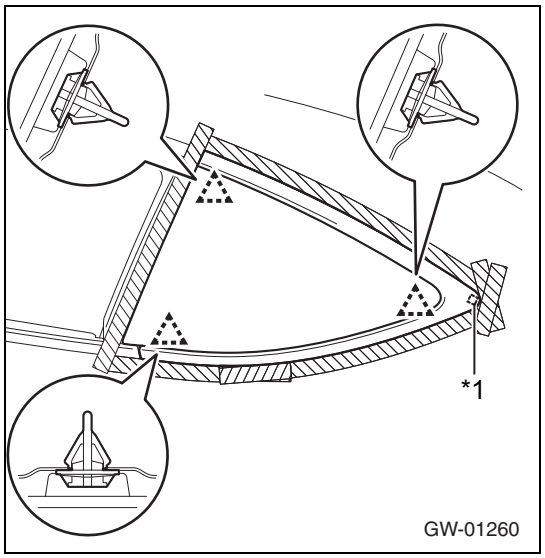

(6) Holding the suction rubbers, release the 3 tabs of the quarter window clips and remove the double-sided tape, then remove the quarter window glass.
CAUTION:
Be careful not to drop the quarter window glass.

Captions in illustration

*1	Double-sided tape

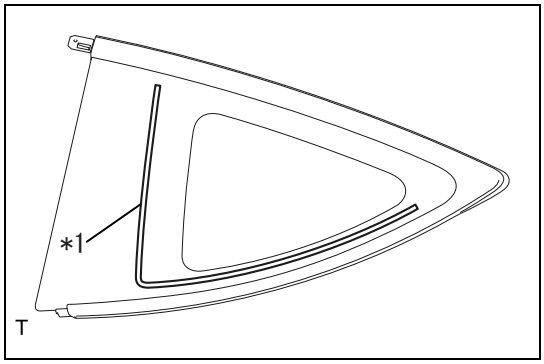

14. Removal of quarter window glass adhesive dam
    (1) When the quarter window glass is reused.
        (a)Using the scraper, remove the quarter window glass adhesive dam.
        CAUTION:
        • Do not damage the quarter window glass.
        • The quarter window glass adhesive dam must be replaced by a new one.

Captions in illustration

*1	Quarter window glass adhesive dam

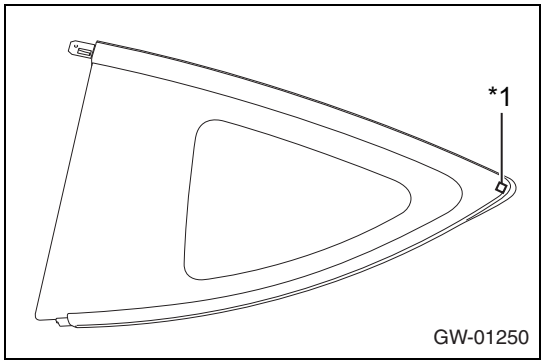

15. Removal of the double-sided tape
    (1) When the quarter window glass is reused.
        (a)Remove the double-sided tape from the quarter window glass molding part.

Captions in illustration

*1	Double-sided tape

Installation

NOTE:

The following procedure is for LH side. Perform the same procedures both for the LH side and RH side, unless otherwise specified.

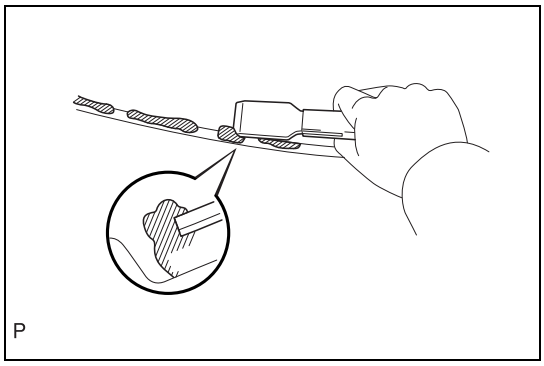

1. Cleaning of quarter window glass
    (1) When the quarter window glass is reused.
        (a)Using a scraper or similar tool, remove the adhesive remaining on the quarter window glass.
        CAUTION:
        Do not damage the quarter window glass.
    (2) Using the appropriate cleaner, clean the rim of the quarter window glass.
        CAUTION:
        New quarter window glass also needs to be cleaned.

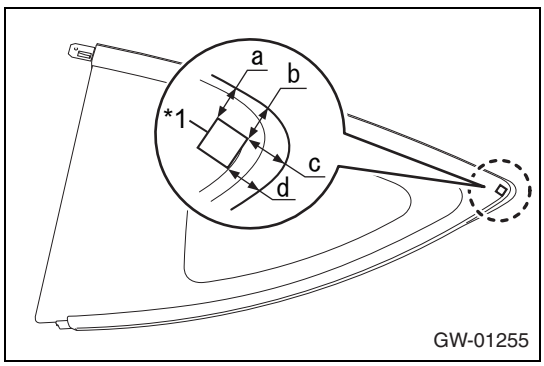

2. Application of double-sided tape
    (1) Prepare a piece of double-sided tape (10 mm {0.394 in}×10 mm {0.394in}).
        Double-sided tape : 3M GT7110
    (2) Apply the double-sided tape onto the quarter window glass, where indicated in the figure.

Captions in illustration

*1	Double-sided tape

Standard value

a	8.9mm {0.350in}
b	8.8mm {0.346in}
c	9.2mm {0.362in}
d	7.8mm {0.307in}

3. Installation of quarter window glass adhesive dam
    (1) Using the appropriate cleaner, clean the installation surface of the quarter window glass adhesive dam.

(2) Install the new quarter window glass adhesive dam in the position on the back of the quarter window glass that is indicated in the figure.

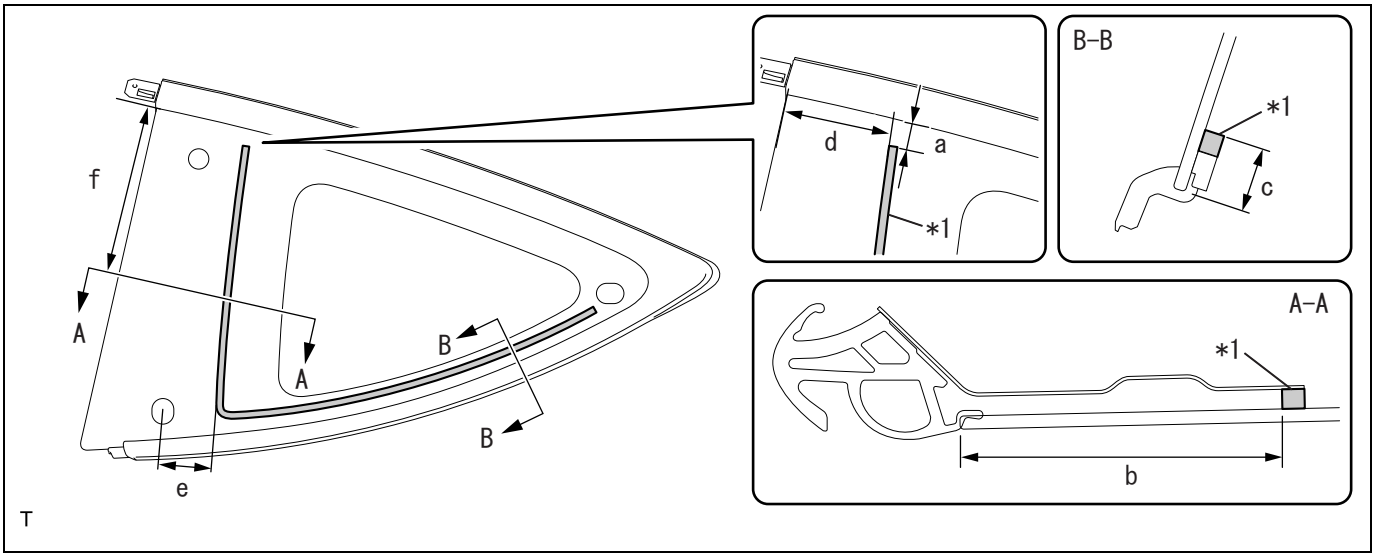

Captions in illustration

*1	Quarter window glass adhesive dam	-	-

Standard value

Part	Dimension
a	13.0 mm {0.512in}
b	72.5 mm {2.854in}
c	13.0 mm {0.512in}
d	62.3 mm {2.453in}
e	23.4 mm {0.921in}
f	123.8 mm {4.874in}

4. Installation of quarter window glass

(1) Cleaning of mounting surface of the body

(a)Remove the adhesive layer on the body using cutter knife or similar tool to obtain smooth surface of 2 mm {0.08 in} thick.

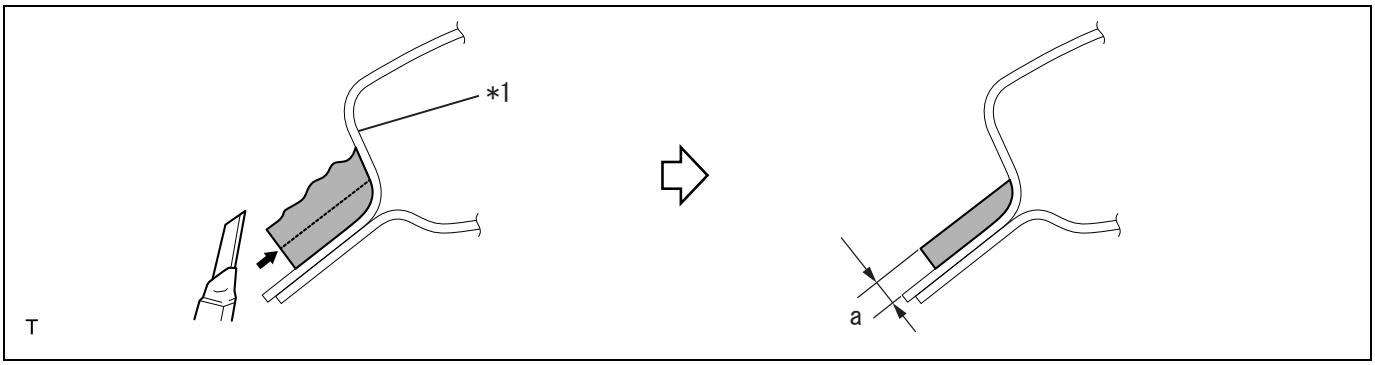

CAUTION:

- Do not damage the body.
- Always leave a little amount of adhesive.

Captions in illustration

*1	Body	-	-
	Adhesive	-	-

Standard value

Part	Dimension
a	2.0 mm {0.079in}

(2) Using the appropriate cleaner, clean the installation surface of the body.
(3) Preparation works prior to quarter window glass installation
(a)Attach the suction rubber onto the quarter window glass.
(b)Apply primer on the body surface.
Primer : The Dow Automotive U-413 or equivalent
CAUTION:
Do not apply the primer thickly.
(4) Apply primer onto the quarter window glass where indicated in the figure.
Primer : The Dow Automotive U-401, U-402 or equivalent
CAUTION:
Do not apply the primer thickly.

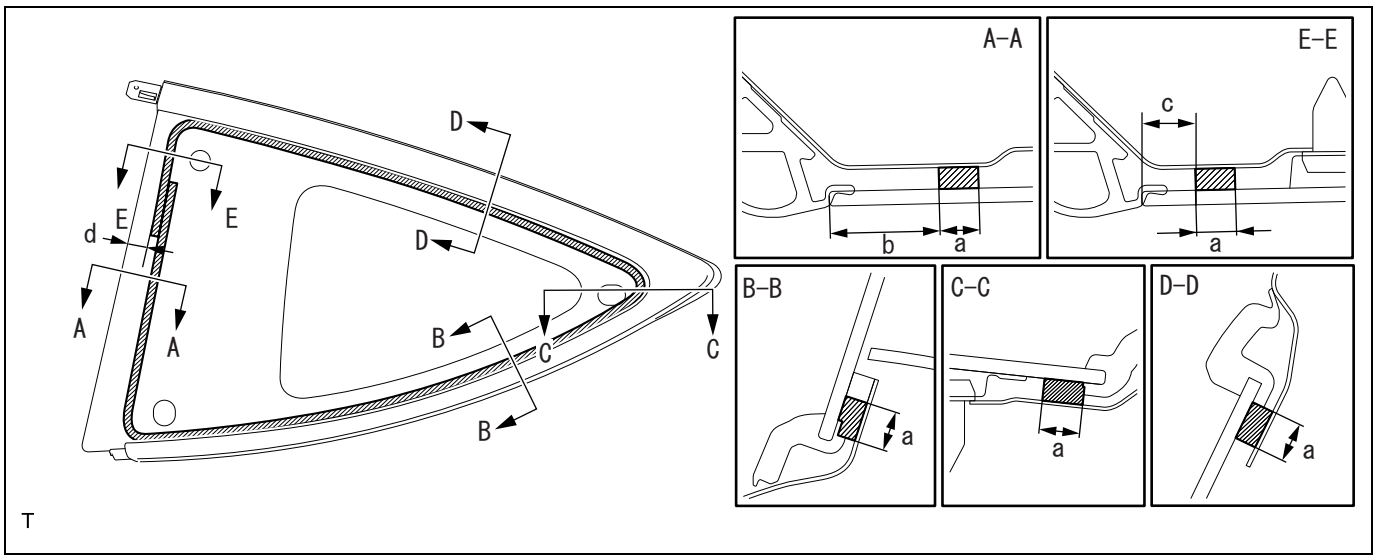

T

Captions in illustration

▨	Primer	-	-

Standard value

Part	Dimension
a	8.0 mm {0.315in}
b	22.3 mm {0.878in}
c	10.1 mm {0.398in}
d	13.9 mm {0.547in}

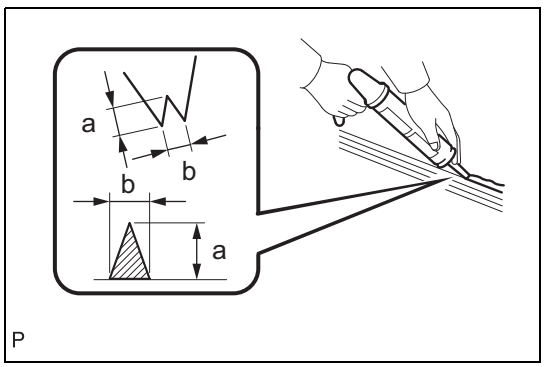

P

(5) Cut the tip of the adhesive nozzle, as shown in the figure.
Standard value

Part	Dimension
a	12.0 mm {0.472in}
b	8.0 mm [0.315 in]

(6) Set the adhesive into the sealant gun.
Adhesive : The Dow Automotive ESSEX U-400HV or equivalent

WS

(7) Apply a bead of adhesive to the installation part of the quarter window glass as shown in below.

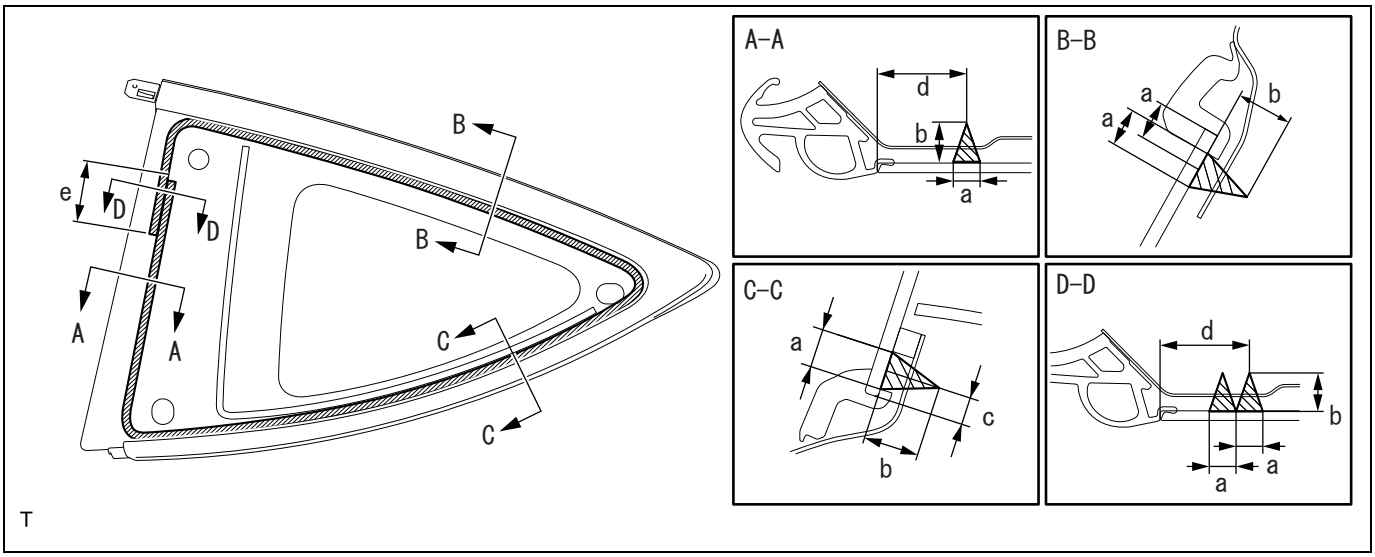

Captions in illustration

▨	Adhesive	-	-

Standard value

Part	Dimension
a	8.0 mm {0.315in}
b	12.0 mm {0.472in}
c	5.6 mm {0.220in}
d	26.3 mm {1.035in}
e	50.0 mm {1.969in}

CAUTION:
Apply adhesive after the primer dried (approx. after 10 minutes).

(8) Installation of quarter window glass (when the quarter window glass is reused.)

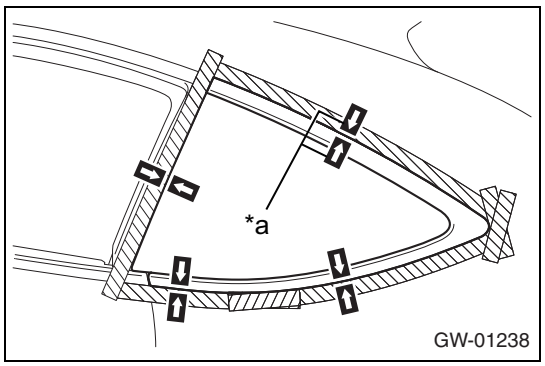

(a)Holding the suction rubbers, align the alignment marks and install the quarter window glass.
CAUTION:
After body side primer is dried (approx. 10 minutes), attach the quarter window glass.

Captions in illustration

*a	Alignment marks

(b)Lightly press the front side of the quarter window glass to fit tightly.
NOTE:
Pressing force: 98 N {10 kgf} {22.0 lbf} or more

(9) Installation of quarter window glass (when new quarter window glass is used.)

(a)Holding the suction rubbers, engage the 3 clips and install the quarter window glass.
CAUTION:
After body side primer is dried (approx. 10 minutes), attach the quarter window glass.

(b)Lightly press the front side of the quarter window glass to fit tightly.
NOTE:
Pressing force: 98 N {10 kgf} {22.0 lbf} or more

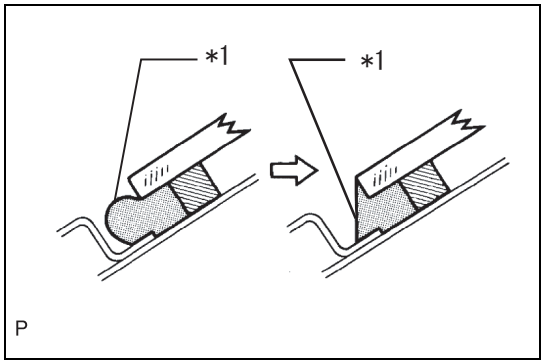

(10) Using a spatula, remove or add adhesive if any excess and/or shortage is found.

Captions in illustration

*1	Adhesive

(11) Remove excess adhesive before cure.

(12) Using protection tapes or similar tapes, hold the quarter window glass until the adhesive cures completely.

NOTE:

For minimum drying time or waiting time after the cure of adhesive, consult the instruction or manual of each adhesive supplier.

5. Leak test and repair test
   (1) After the adhesive cure, pour water over the vehicle and make sure no water leak inside.
   (2) If any water leak is found, fill the three cement black after the drying.
   (3) Remove the applied protective tape and packing tape.
6. Installation of the retainer & molding ASSY LH
   (1) Fit in the tab.
   (2) Install the retainer & molding ASSY with the 7 screws.
7. Installation of the weather strip roof side LH
   (1) Using the appropriate cleaner, clean the installation surface of the body.
   (2) Engage the 5 clips, insert the upper part of the weather strip roof side in the groove of the retainer & molding ASSY, and affix it with double-sided tape.
8. Installation of center pillar garnish LH
   NOTE:
   Perform the same procedures as RH side. (Refer to IT - 57)
9. Installation of quarter rear trim garnish FR LH
   NOTE:
   Perform the same procedures as RH side. (Refer to IT - 57)
10. Installation of rear window side garnish LH
    NOTE:
    Perform the same procedures as RH side. (Refer to IT - 57)
11. Installation of quarter trim lid LH
    NOTE:
    Perform the same procedures as RH side. (Refer to IT - 57)
12. Installation of quarter lower trim LH
    NOTE:
    Perform the same procedures as RH side. (Refer to IT - 58)
13. Installation of the trunk trim cover INN LH
    NOTE:
    Perform the same procedures as RH side. (Refer to IT - 58)
14. Connection of front door opening trim weather strip LH
    NOTE:
    Perform the same procedures as RH side. (Refer to IT - 58)
15. Installation of front door scuff plate LH
    NOTE:
    Perform the same procedures as RH side. (Refer to IT - 58)

16. Connection of front seat outer belt ASSY LH
    NOTE:
    Perform the same procedures as RH side. (Refer to SB - 28)
17. Installation of the separate type rear seat cushion ASSY LH
    NOTE:
    Perform the same procedures as RH side. (Refer to SE - 39)

Relay

Unit inspection

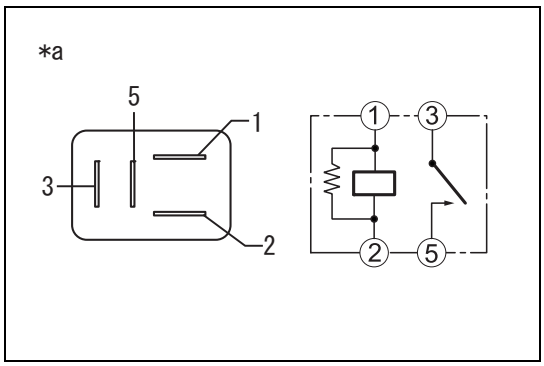

1. Inspection of defogger relay
   (1) Measure the resistance between connector terminals as shown below.
   Resistance

Inspection terminals	Inspection conditions	Standard value
3 - 5	When battery voltage is not applied between terminals 1 - 2.	10 kΩ or more
	When battery voltage is applied between terminals 1 - 2.	Less than 1 Ω

*a	Connector not connected (RR DEF relay)

Door / trunk

Trunk opener system
- Function inspection . . . DH-3
- Parts location . . . DH-4
- System diagram . . . DH-5
- Description of functions . . . DH-5
- Symptom table . . . DH-6
- How to troubleshoot . . . DH-6
- Check list for interview . . . DH-8
- ECM terminal arrangement . . . DH-8
- Data monitor / active test . . . DH-10
- Trunk opener does not operate . . . DH-10

Front hood
- Exploded view . . . DH-17
- Disassembly . . . DH-18
- Assembly . . . DH-18
- Adjustment . . . DH-19
- On-vehicle inspection . . . DH-20

Cable ASSY front hood
- Exploded view . . . DH-22
- Removal . . . DH-23
- Installation . . . DH-25

Front door
- Exploded view . . . DH-27
- Disassembly . . . DH-31
- Assembly . . . DH-43
- Adjustment . . . DH-54

Trunk panel
- Exploded view . . . DH-59
- Disassembly . . . DH-61
- Assembly . . . DH-61
- Adjustment . . . DH-62

Stay ASSY trunk
- Exploded view . . . DH-65
- Removal . . . DH-65
- Installation . . . DH-66
- Disposal . . . DH-66

Trunk opening switch ASSY
- Exploded view . . . DH-68
- Removal . . . DH-68
- Installation . . . DH-69
- Unit inspection . . . DH-69

Trunk electrical key switch
- Exploded view . . . DH-70
- Removal . . . DH-70
- Installation . . . DH-71

Unit inspection DH-71

Trunk opener main switch

Exploded view DH-72
Removal DH-72
Installation DH-73
Unit inspection DH-74

Cable ASSY fuel

Exploded view DH-75
Removal DH-78
Installation DH-81

Trunk opener system

Function inspection

1. Function inspection of the trunk opener
   (1) When the vehicle meets all the following conditions, after operating the trunk opening switch ASSY, check that the trunk becomes unlatched (partially opens).
      (a)IG OFF
      (b)In IG ON status, the vehicle's speed is 3 km or less or the shift is in the P position.
      (c)The auto alarm is not in caution or warning status.*
         *: When there is an auto alarm system

Parts location

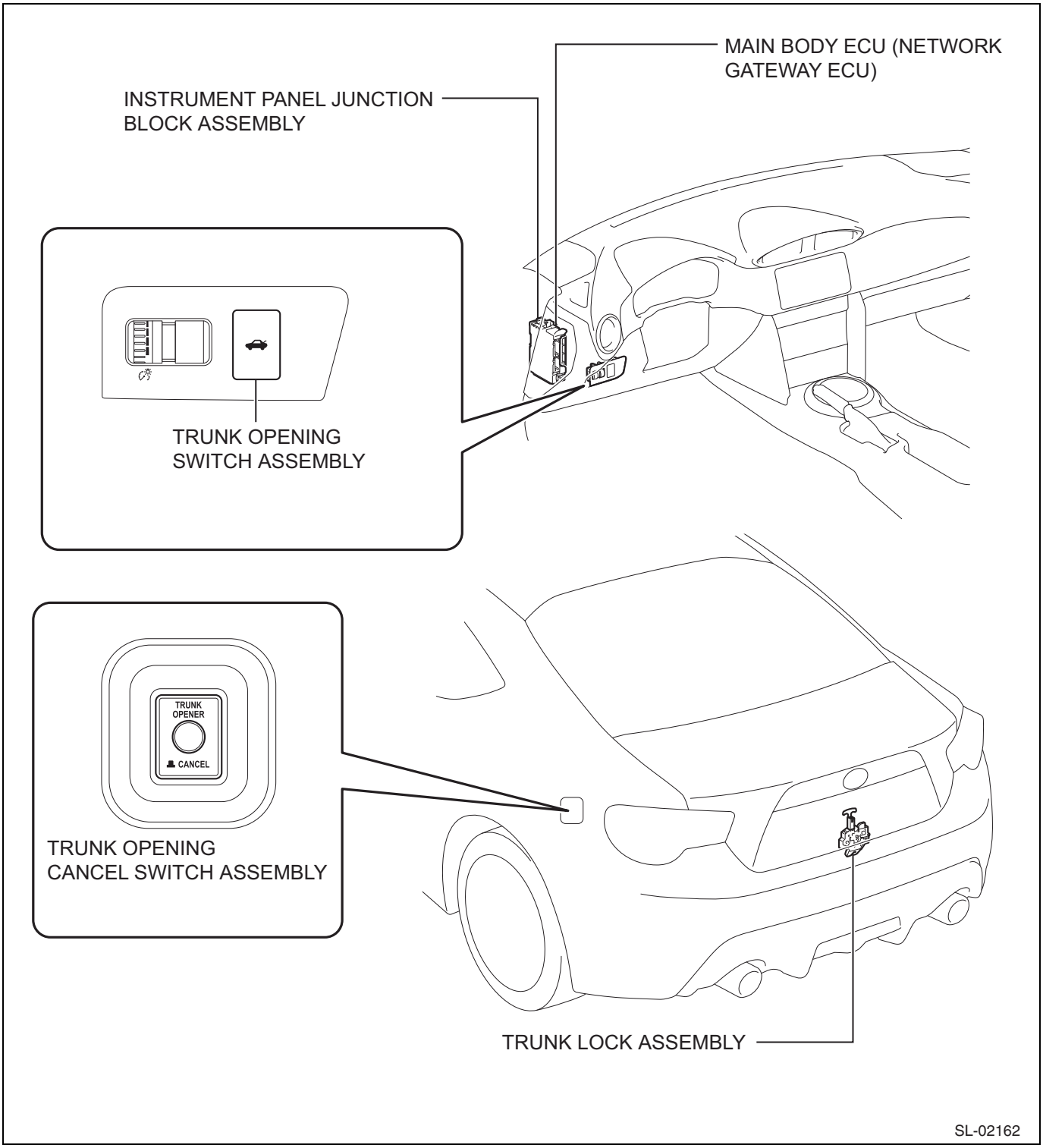

SYSTEM DIAGRAM

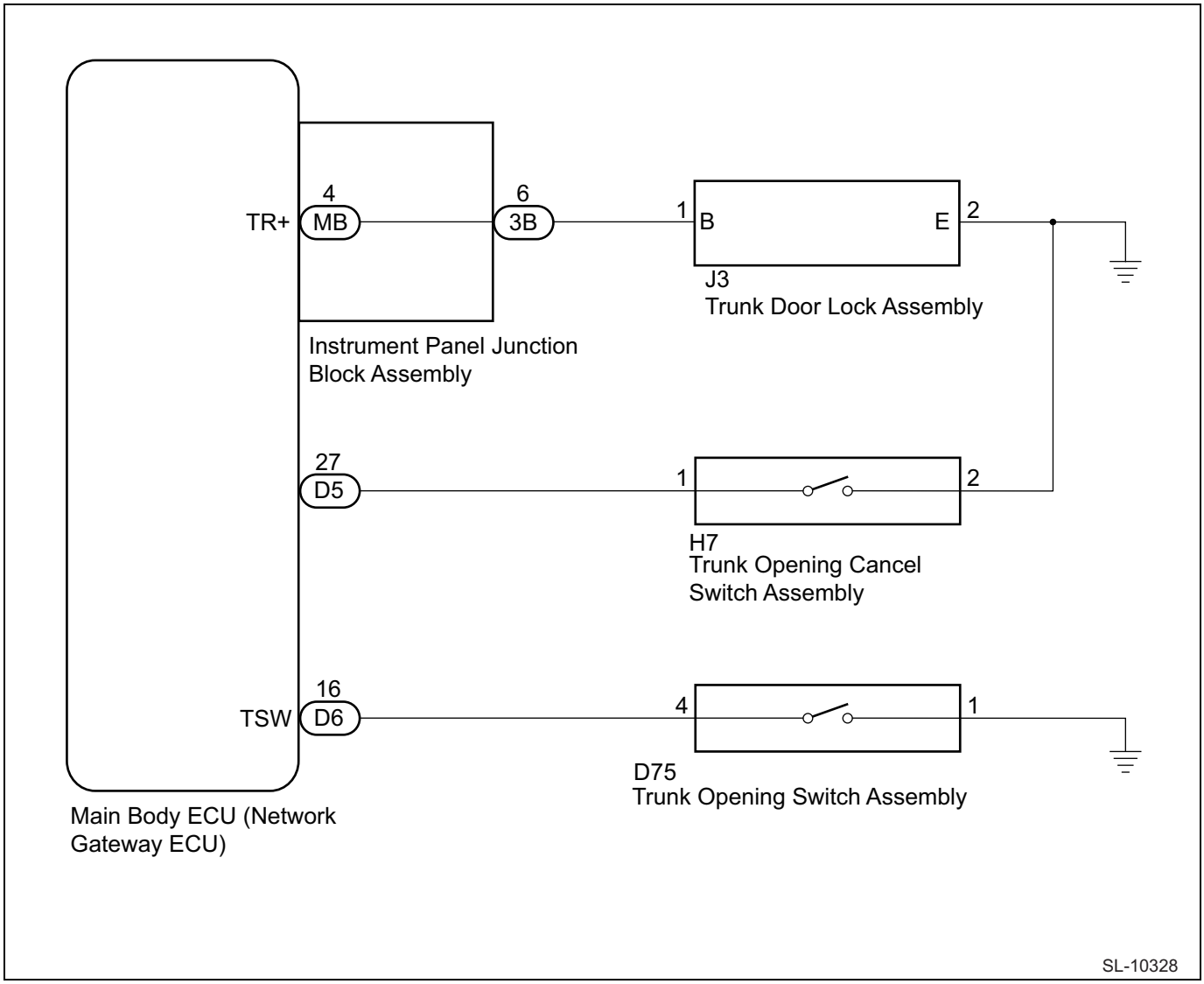

Communication Table

Sender	Receiver	Signal	Line
Trunk Opening Switch	Main body ECU (multiplex network body ECU)	Trunk opening switch signal	Local communication
Trunk Opener Cancel Switch	Main body ECU (multiplex network body ECU)	Trunk opener cancel switch signal	Local communication

DH

Description of functions

1. Description of the trunk opener system
   (1) The trunk opener is an electric type.
   (2) When it receives the ON signal from the trunk opening switch ASSY, the main body ECM (multiplex network body computer) operates the trunk lock motor.
   (3) The trunk opener system operates in the following ways.

Opening cancel switch status	Opening switch status	Door lock status	Trunk opener system status
ON (pressed in)	ON (pressed in)	Locked	Does not operate
ON (pressed in)	OFF (not pressed in)	Locked	Does not operate
ON (pressed in)	ON (pressed in)	Not locked	Does not operate
OFF (not pressed in)	ON (pressed in)	Not locked	Operates

2. Functions of the main parts

Component	Function
Trunk lock cylinder ASSY	Controlled by the main body ECM (multiplex network body computer), it releases the trunk lock.
Trunk opening switch ASSY	When the trunk opening switch is pressed in, the opening switch ON signal is sent to the main body ECM (multiplex network body computer).
Trunk opening cancel switch ASSY	When the trunk opening cancel switch is pressed in, the opening cancel switch ON signal is sent to the main body ECM (multiplex network body computer).
Main body ECM (multiplex network body ECM)	When the trunk opening switch is pressed in, the main body ECM (multiplex network body computer) receives the opening switch ON signal. When the trunk opening cancel switch is pressed in, the main body ECM (multiplex network body computer) receives the opening cancel switch ON signal.

Symptom table

NOTE:

- Use the table below to help determine the cause of problem symptoms. If multiple suspected areas are listed, the potential causes of the symptoms are listed in order of probability in the "Suspected Area" column of the table. Check each symptom by checking the suspected areas in the order they are listed. Replace parts as necessary.
- Inspect the fuses and relays related to this system before inspecting the suspected areas below.

Luggage Compartment Door Opener System

Symptom	See page
Trunk opener does not operate	DH - 10

How to troubleshoot

NOTE:

Use the following procedure to troubleshoot the luggage compartment door opener system.

1	Bring in the car

Next

2	Interview and phenomenon check

NOTE:

Refer to DH - 8.

Next

3	Communication function inspection of the CAN communication system

(1) Check CAN communication system. (Refer to NW - 30)

Result

Result	Go to
If the CAN communication system is functioning properly, [there is no "CAN communication error, ECM communication error / lost communication" diagnostic code output.]	A
If the CAN communication system is not functioning properly, [there is a "CAN communication error, ECM communication error / lost communication" diagnostic code output.]	B

B → See the CAN communication system troubleshooting flowchart

A

4	Check vehicle status

(1) Check whether the auto alarm system is installed.

Result

Result	Go to
If there is an auto alarm system	A
If there is no auto alarm system	B

B → Go to Step 6.

A

5	Function inspection of the auto alarm system

(1) Check that malfunction does not occur in the auto alarm system. (Refer to TD - 322)

Result

Result	Go to
Normal auto alarm system	A
Auto alarm system malfunction	B

B → Go to "Auto alarm system" (Refer toTD - 322)

A

6	Symptom table

NOTE:

Refer to DH - 6.

Result

Result	Go to
Not applicable to the symptom table.	A
Applicable to the symptom table.	B

B → Go to Step 7.

A

7	Based on the trouble phenomenon, perform troubleshooting with the following steps.

(1) [Data monitor] / [Active Test] (Refer to DH - 10)
  (a) Inspection with SSM4 [Data monitor]
  (b) Inspection with SSM4 [Active Test]
(2) ECM terminal arrangement (Refer to DH - 8)
(3) Unit inspection

Next

8	Adjustment, repair, or replacement

Next

Complete

Check list for interview

Trunk Opener Diagnosis Checklist for Interview

Year/date of vehicle bring-in: Year Month Date

Name		Registration No.		First registration	Year Month Date
		Vehicle model		Frame No.	
Front	Engineer	Engine type		Odometer reading	mile/km

Customer specified content

Date when trouble occurred (from when)	Year Month Date Time		
Frequency of occurrence	Continuous Sometimes (times/day, times/month)		
Condition of trouble occurrence			
Weather	Fine / Cloudy / Rainy / Snowy / Other ( )	Temperature	Approx. ( ) °F (°C)
Road	Inner city / Suburbs / Highway / Others ( )		Paved road / Unpaved road
Trouble symptom	☐ Trunk opener does not operate.		
	☐ Trunk opening cancel switch does not operate.		
	☐ Others		
Conditions for normal recovery	☐ When ACC ON ☐ When engine starts ☐ ( )		
Condition when trouble occurred	☐ ACC OFF → ON ☐ When ( ) switch is operated ☐ Others ( )		

SL-02227

DH

ECM terminal arrangement

1. Main body ECM (network gateway computer), instrument panel junction block ASSY
   (1) Inspection of the main body ECM (network gateway computer), instrument panel junction block ASSY

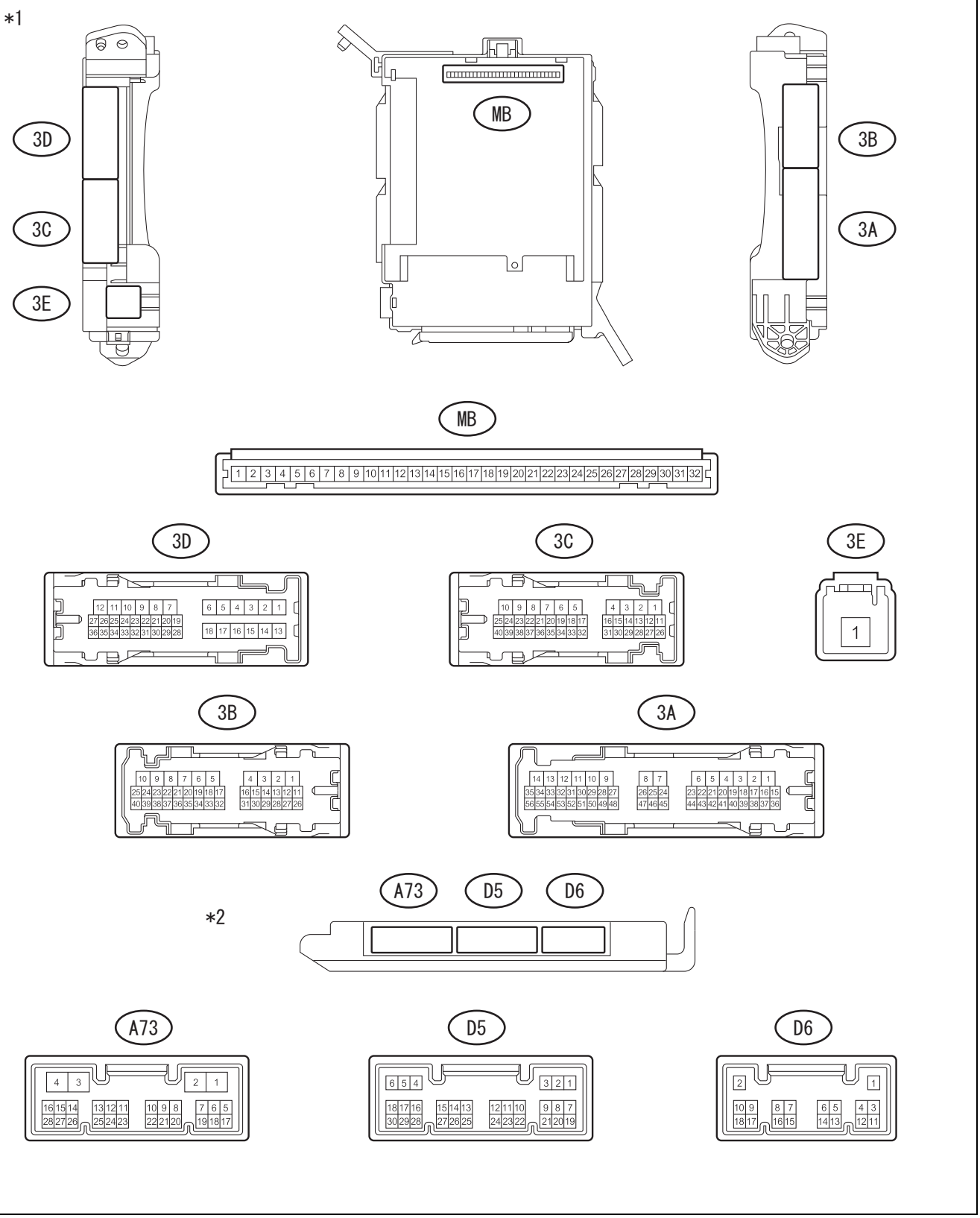

H

Captions in illustration

*1	Instrument panel junction block ASSY	*2	Main body ECM (Network gateway computer)

(a)Remove the main body ECM (network gateway computer) from the instrument panel junction block ASSY.

(b)Measure the voltage and resistance between terminals.

Standard value

Terminal No. (Terminal symbol)	Inspection conditions	Standard value
MB-1 (BECU) ←→chassis ground	Always	11 to 14 V
MB-8 (IG) ←→chassis ground	IG OFF →IG ON	Less than 1 V →11 to 14 V
MB-9 (ACC) ←→chassis ground	ACC OFF →ACC ON	Less than 1 V →11 to 14 V
MB-11 (GND) ←→chassis ground	Always	Less than 1 Ω
D5-22 (ACC) ←→chassis ground*	ACC OFF →ACC ON	Less than 1 V →11 to 14 V
D6-16 (TSW) ←→chassis ground	Trunk opening switch ASSY OFF →ON	10 kΩ or more →less than 1 Ω

*: With smart entry & start system

NOTE:

If it is outside the standard values, the vehicle is defective.

(c) Install the main body ECM (network gateway computer) on the instrument panel junction block ASSY.

(d) Measure the voltage between the terminals.

Standard value

Terminal No. (Terminal symbol)	Inspection conditions	Standard value
D6-16 (TSW) ←→chassis ground	Trunk opening switch ASSY OFF →ON	Pulse generation →less than 1 V
3B-6 ←→chassis ground	Trunk opening switch ASSY OFF →ON	Less than 1 V →11 to 14 V →less than 1 V

NOTE:

If it is outside the standard values, the main body ECM (network gateway computer) is defective.

Data monitor / active test

1. Inspection with SSM4

(1) [Data monitor]

(a) Use the SSM4 and [Data monitor] to determine functionality and narrow down the defective part.

Criteria

SSM4 screen: [Each System] →[Body Control] →[Data monitor]

Item Name	Description/display range	Normal value	Remarks
[Trunk/BDoor Open SW]	Trunk opening switch ASSY status Display range: ON - OFF	ON: the switch is pressed in OFF: the switch is not pressed in	-

(2) [Active Test]

(a) Use the SSM4 to conduct [Active Test] and determine functionality and narrow down the defective part.

Criteria

SSM4 screen: [Each System] →[Body Control] →[Active Test]

Item	Drive
[Trunk and Back-Door Open]	Open

DH

Trunk opener does not operate

Circuit description

The main body ECM (network gateway computer) receives a switch signal from the trunk opening switch ASSY, then starts the trunk lock ASSY motor and opens the trunk. (For operation conditions, refer to the function inspection DH - 3)

Circuit figure

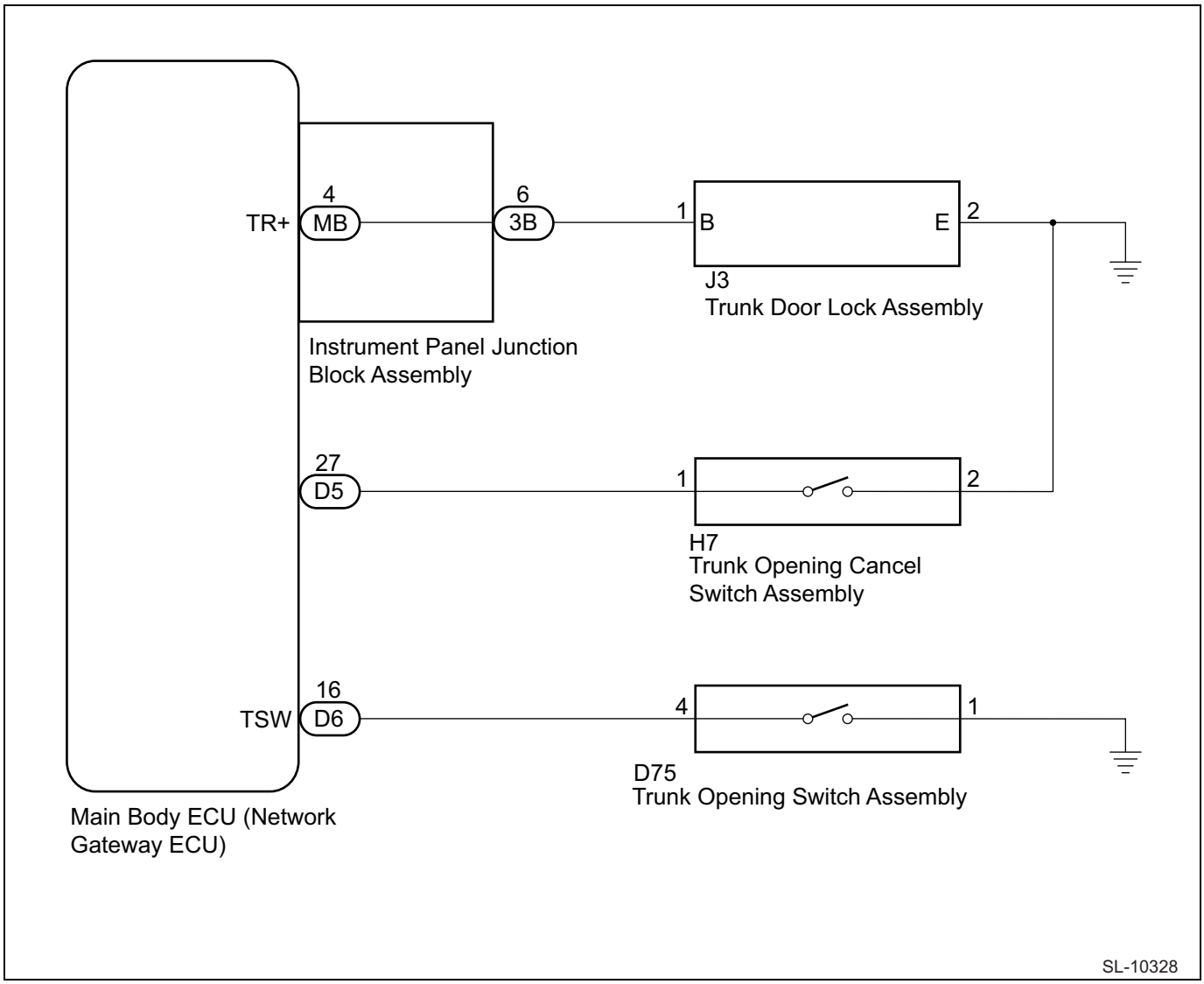

Inspection steps

CAUTION:

The trunk opener system uses the CAN communication system. First, perform a “Communication function inspection”, following “How to troubleshoot (Refer to DH - 6)”, and after checking for any malfunction in the communication system, you can proceed with troubleshooting.

DH

1	Trunk opener system check

(1) When the trunk opening cancel switch ASSY is ON, press trunk opening switch ASSY and confirm that the trunk does not open.

Criteria: The trunk opener system does not operate.

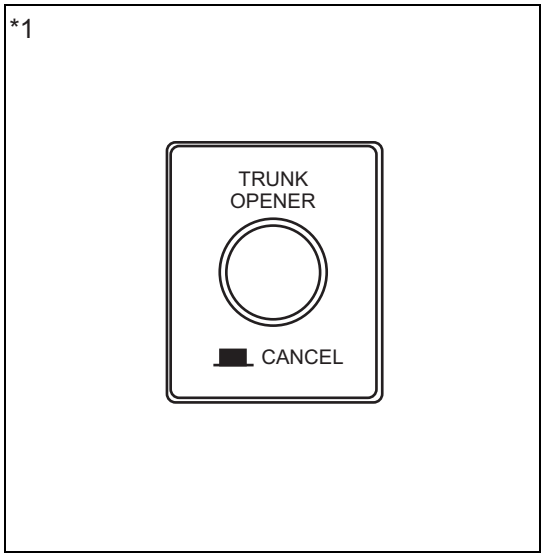

(2) When the trunk opening cancel switch ASSY is OFF, press trunk opening switch ASSY and confirm that the trunk opens.
Criteria: The trunk opener system operates.

Captions in illustration

*1	Trunk opening cancel switch ASSY

NG → Go to Step 2.

OK

Complete

2	Implementation of SSM4 [Active Test]

(1) [Active Test]
(a) Using the SSM4 and the [Active Test], check that the trunk can be opened. (Refer to DH - 10)

Criteria
SSM4 screen: [Each System] →[Body Control] →[Active Test]

Item	Drive
[Trunk and Back-Door Open]	Open

NG → Go to Step 8.

OK

DH

3	SSM4 [Data monitor] (Trunk opening switch ASSY)

(1) [Data monitor]
(a) Using the SSM4, check the data monitor of the main body ECM (network gateway computer). (Refer to DH - 10)

Criteria
SSM4 screen: [Each System] →[Body Control] →[Data monitor]

Tester display	Measurement items / range	Normal condition	Notes for diagnosis
[Trunk and Back-Door Open]	Trunk opening switch signal / [ON or OFF]	[ON]: The trunk opening switch ASSY is pressed in. [OFF]: The trunk opening switch ASSY is not pressed in.	-

Tester display	Measurement items / range	Normal condition	Notes for diagnosis
[Trunk main switch]	Trunk opening cancel switch signal / [ON or OFF]	[ON]: The trunk opening cancel switch ASSY is pressed in. [OFF]: The trunk opening cancel switch ASSY is not pressed in.	-

Result

Result	Proceed to
OK	A
NG (The trunk opening switch ASSY has a malfunction.)	B
NG (The trunk opening cancel switch ASSY has a malfunction.)	C

B → Go to Step 4.

C → Go to Step 6.

A

Replacement of the main body ECM (multiplex network body ECM)

4	Unit inspection of trunk opening switch ASSY

(1) Remove the trunk opening switch ASSY. (Refer to DH - 68)
(2) Perform the unit inspection of the trunk opening switch ASSY. (Refer to DH - 69)

NG → Replacement of the trunk opening switch ASSY (Refer to DH - 68)

OK

5	Inspection of the wiring harnesses and the connectors (main body ECM - trunk opening switch ASSY)

(1) Disconnect the main body ECM (network gateway computer) connector D6 and the trunk opening switch ASSY connector D75.
(2) Measure the resistance between the terminals.

Resistance (open circuit check)

Inspection terminals (Terminal symbol)	Inspection conditions	Standard value
D6-16 (TSW) - D75-4	Always	Less than 1 Ω

Resistance (short circuit check)

Inspection terminals (Terminal symbol)	Inspection conditions	Standard value
D6-16 (TSW) - chassis ground	Always	10 kΩ or more
D75-1 - chassis ground	Always	Less than 1 Ω

DH

NG → Repair or replacement of wiring harness or connector

OK

Replacement of the main body ECM (multiplex network body ECM) (Refer to PD - 25)

6	Check the trunk opening cancel switch ASSY.

(1) Remove the trunk opening cancel switch ASSY. (Refer to DH - 72)
(2) Check the trunk opening cancel switch ASSY. (Refer to DH - 74)

NG → Replace the trunk opening cancel switch ASSY (Refer to DH - 72)

OK

7	Inspection of the harnesses and the connectors (Trunk opening cancel switch ASSY - main body ECM)

(1) Disconnect the D5 of the main body ECM (Multiplex network body computer) connector and H7 trunk opening cancel switch ASSY.
(2) Measure the resistance according to the following table.

Normal resistance (open circuit check)

Tester connection	Conditions	Specified condition
D5-27 - H7-1	Always	1 Ωor less

Normal resistance (short circuit inspection)

Tester connection	Conditions	Specified condition
D5-27 - chassis ground	Always	10 kΩ or more
H7-2 - chassis ground	Always	1 Ωor less

NG → Repair or replacement of the harnesses or connectors (trunk opening cancel switch ASSY - main body ECM)

OK

DH

Replacement of the main body ECM (multiplex network body ECM)

8	Unit inspection for the trunk lock ASSY

(1) Remove the trunk lock ASSY. (Refer to DL - 105)
(2) Perform the unit inspection of the trunk lock ASSY. (Refer to DL - 108)

NG → Replacement of the trunk lock ASSY (Refer to DL - 105)

OK

9	Inspection of the wiring harnesses and the connectors (instrument panel junction block ASSY - trunk lock ASSY)

(1) Disconnect the instrument panel junction block ASSY connector (3B) and the trunk lock ASSY connector (J3).
(2) Measure the resistance between the terminals.

Resistance (open circuit check)

Inspection terminals (Terminal symbol)	Inspection conditions	Standard value
3B-6 - J3-1 (B)	Always	Less than 1 Ω

Resistance (short circuit check)

Inspection terminals (Terminal symbol)	Inspection conditions	Standard value
3B-6 - chassis ground	Always	10 kΩ or more
J3-2 (E) - chassis ground	Always	Less than 1 Ω

NG → Repair or replacement of wiring harness or connector

OK

10	Unit inspection of the instrument panel junction block ASSY.

(1) Remove the instrument panel junction block ASSY. (Refer to PD - 25)
(2) Remove the main body ECM (network gateway computer) from the instrument panel junction block ASSY.
(3) Measure the resistance between the terminals.

*a

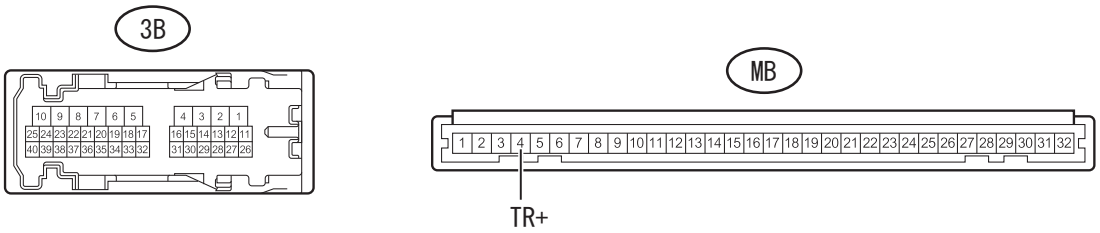

Captions in illustration

*a	Connector not connected (Instrument panel junction block ASSY connector)	-	-

Resistance

Inspection terminals (Terminal symbol)	Inspection conditions	Standard value
MB-4 (TR+) - 3B-6	Always	Less than 1 Ω

NG → Replacement of the instrument panel junction block ASSY (Refer to PD - 25)

DH

OK

Replacement of the main body ECM (network gateway computer) (Refer to PD - 25)

Front hood

Exploded view

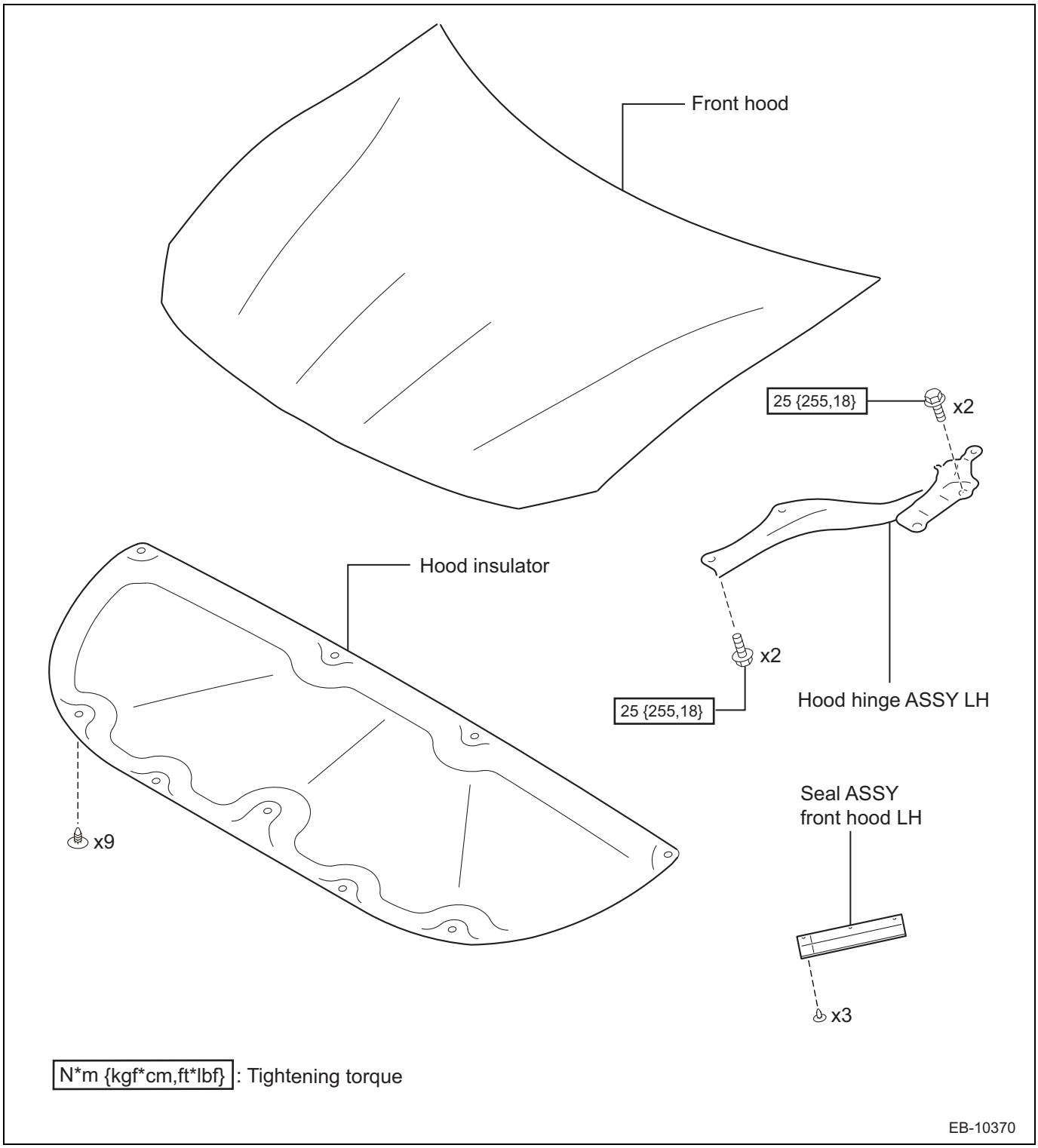

Disassembly

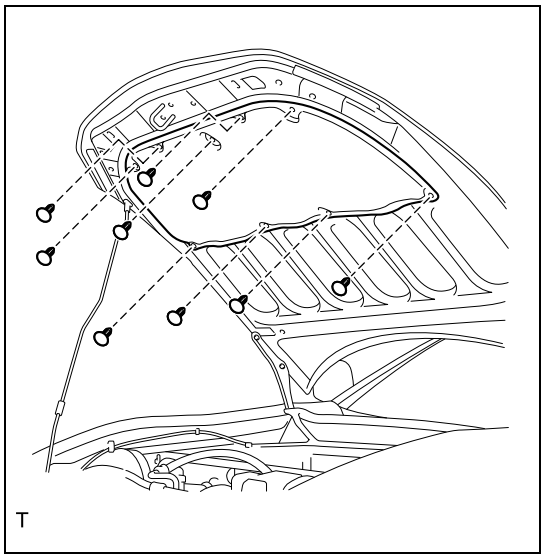

1. Removal of the hood insulator
   (1) Using a clip remover, remove the 9 clips, and remove the hood insulator.

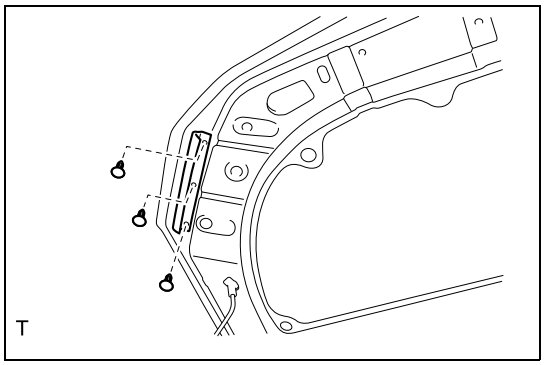

2. Removal of the seal ASSY front hood RH
   (1) Using a clip remover, remove the 3 clips and remove the seal ASSY front hood RH.

3. Removal of the seal ASSY front hood LH
   (1) Remove the part in the same manner as RH side.

Assembly

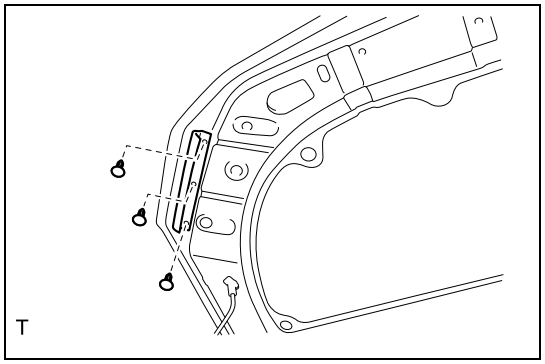

1. Installation of the seal ASSY front hood RH
   (1) Using 3 clips, install the seal ASSY front hood RH.

2. Installation of the seal ASSY front hood LH
   (1) Install the part in the same manner as RH side.

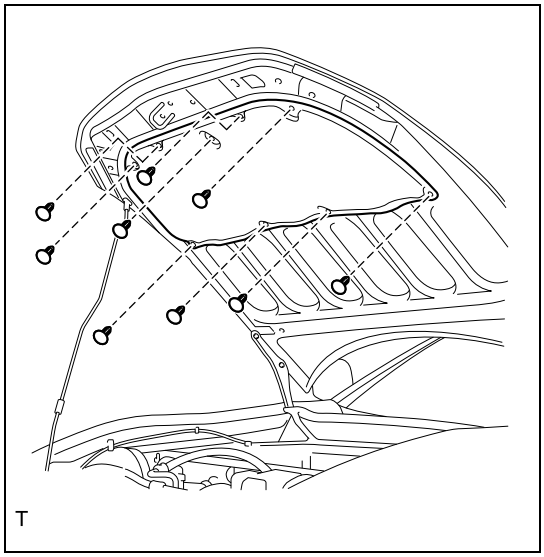

3. Installation of the hood insulator
   (1) Using 9 clips, install the hood insulator.

4. Adjustment of the hood ASSY (hood SUB-ASSY) (Refer to DH - 19)

Adjustment

1. Inspection of the hood ASSY (hood SUB-ASSY) (Refer to DH - 20)

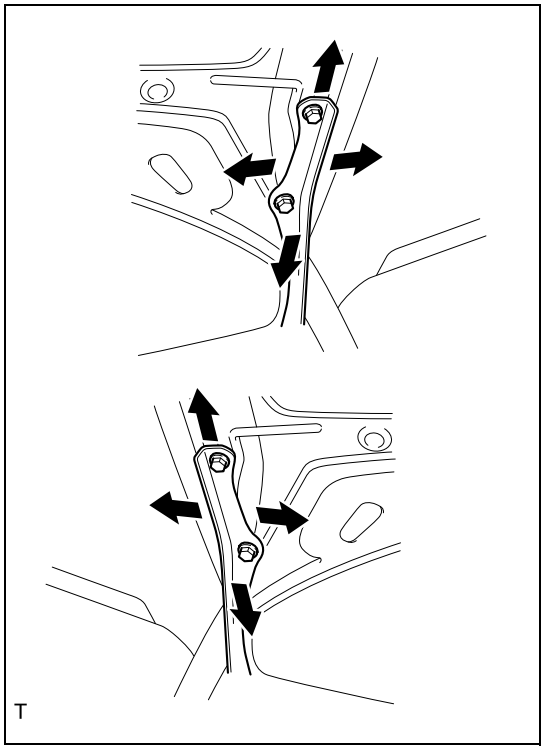

2. Adjustment of the hood ASSY (hood SUB-ASSY)
   (1) Adjustment of the hood horizontal direction
      (a)Loosen the bolts of the hood hinge ASSY to adjust.
         Standard value:T=25N·m {255kgf·cm} {18.4ft·lbf}

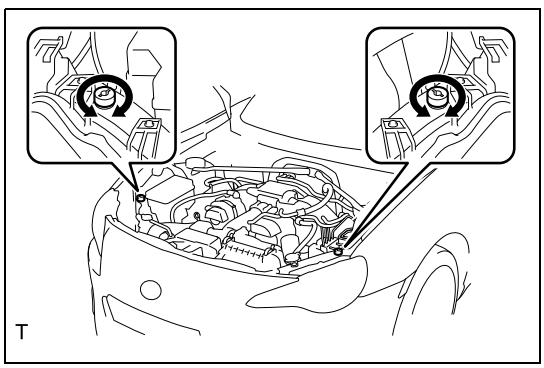

   (2) Adjustment of the vertical direction of both sides of the hood's front end
      (a)Turn the 2 cushions to adjust the height.

DH

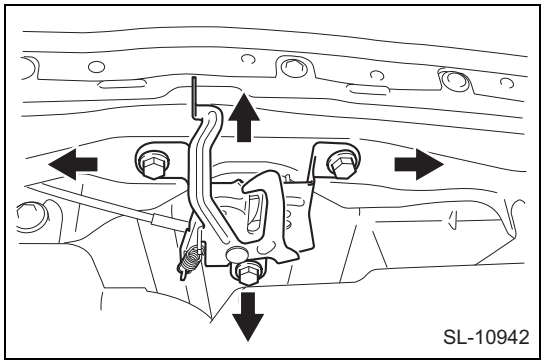

(3) Adjustment of the vertical and left and right directions of the hood's front end.
(a)Loosen the 3 bolts to adjust.

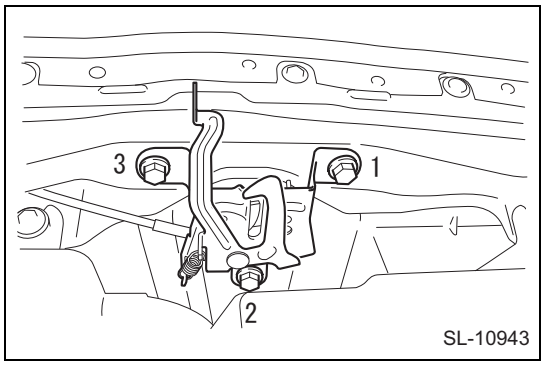

(b)In the order shown in the figure, tighten the 3 bolts.
Standard value:T=33N·m {336kgf·cm} {24.3ft·lbf}

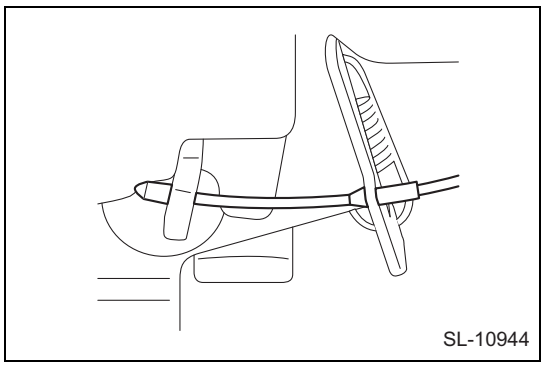

(c)Connect the cable ASSY front hood (hood lock control cable ASSY).

On-vehicle inspection

1. Inspection of the hood ASSY (hood SUB-ASSY)
   (1) Inspect if each placement dimension is within the reference values.

DH

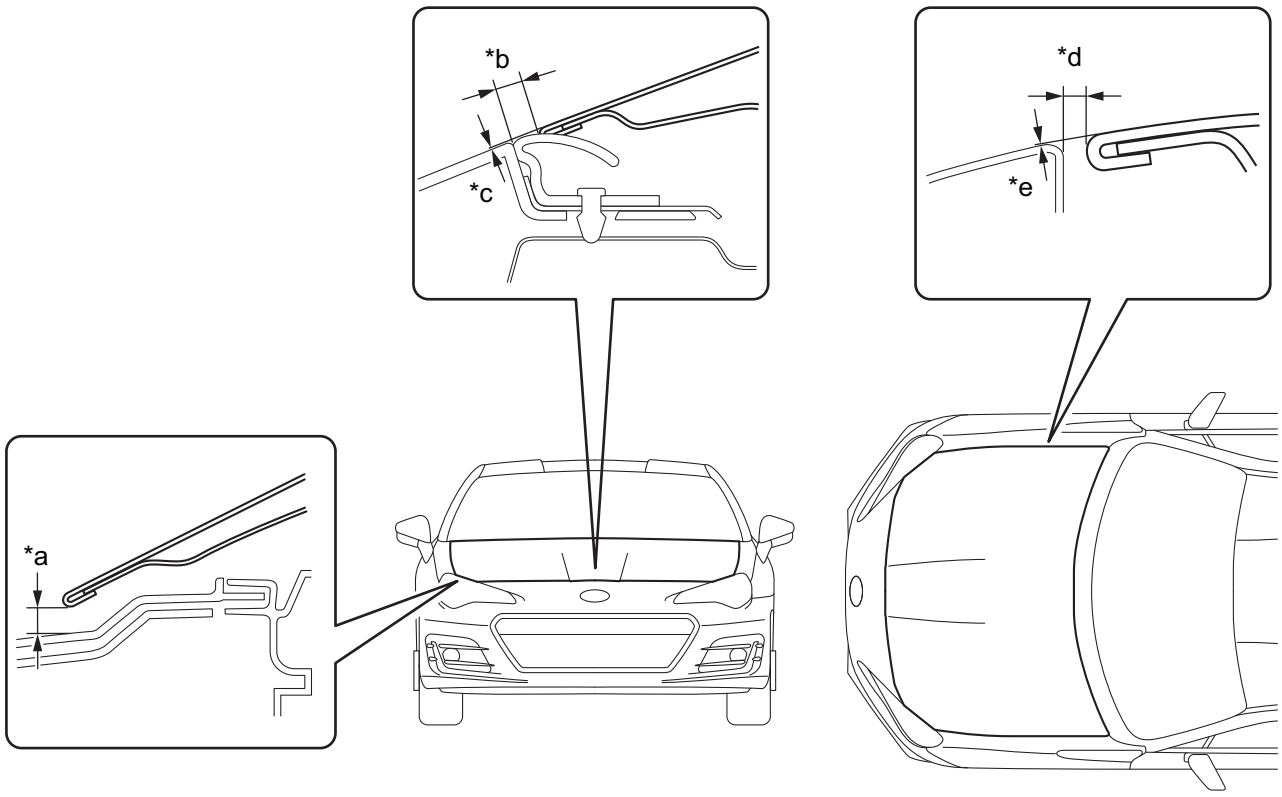

EB-10053

Reference values

*a	5.8 to 9.8 mm {0.2283 to 0.3858 in}	*b	3.0 to 7.0 mm {0.1181 to 0.2756 in}
*c	-2.0 to 2.0 mm {-0.0787 to 0.0787 in}	*d	2.0 to 5.0 mm {0.0787 to 0.1969 in}
*e	-2.0 to 1.0 mm {-0.0787 to 0.0394 in}	-	-

Cable ASSY front hood

Exploded view

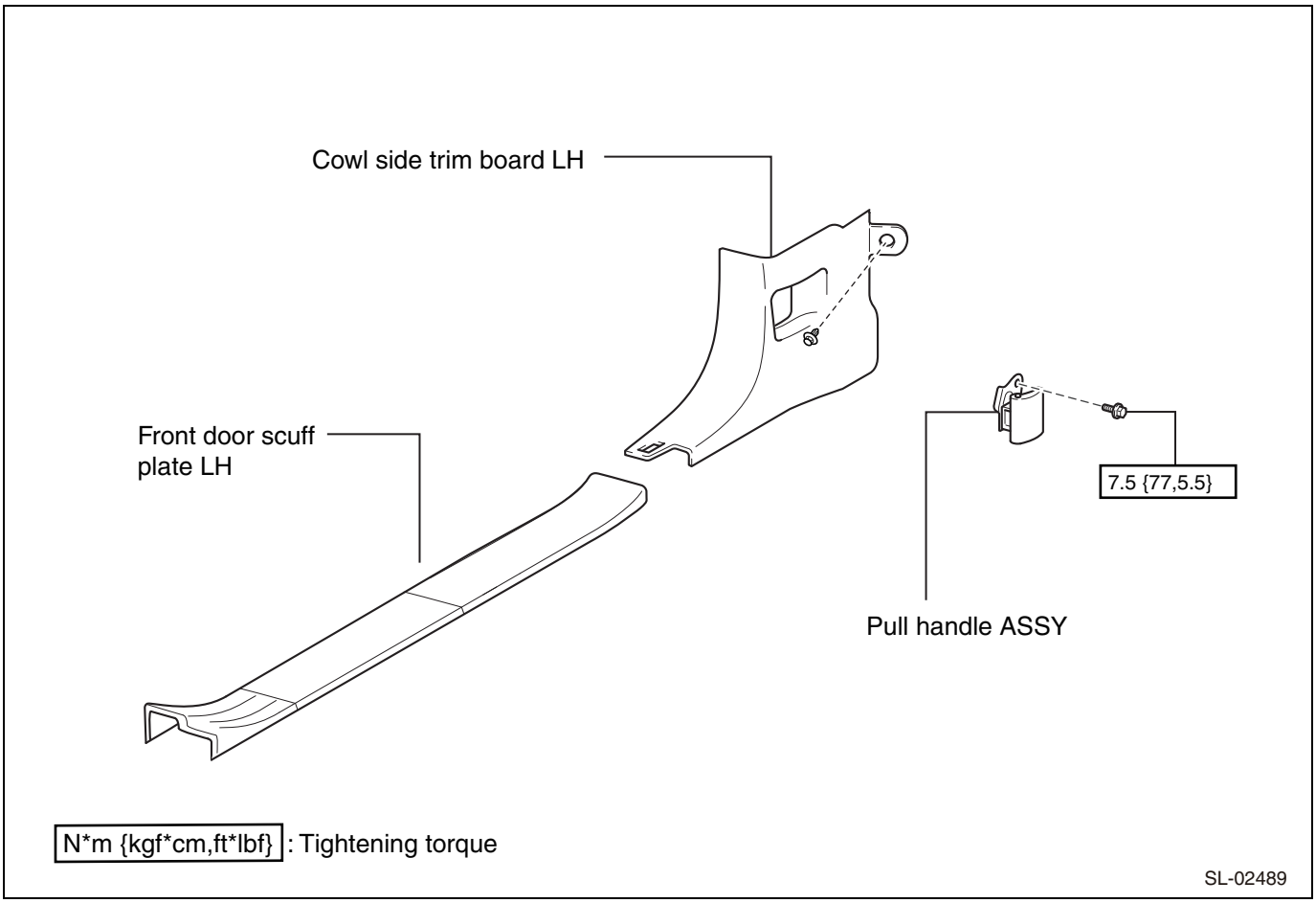

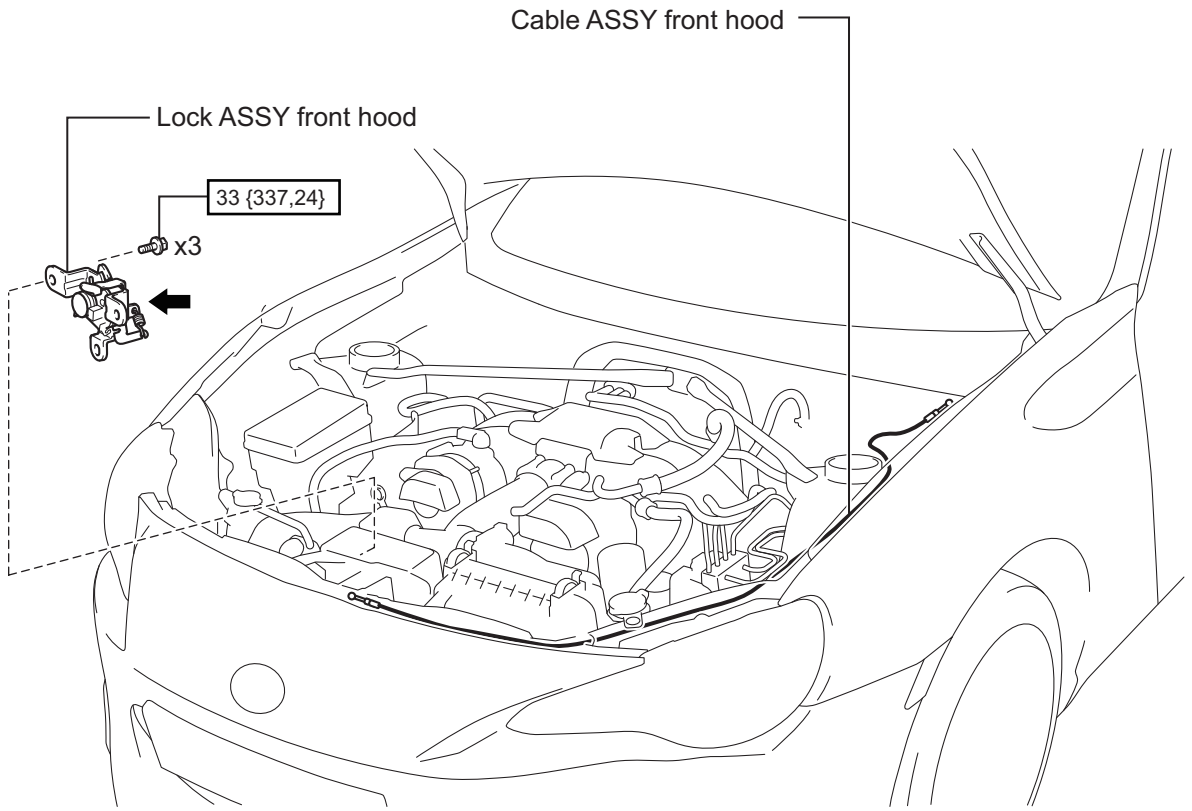

Removal

1. Removal of front door scuff plate LH (Refer to IT - 48)
2. Removal of cowl side trim board LH (Refer to IT - 48)

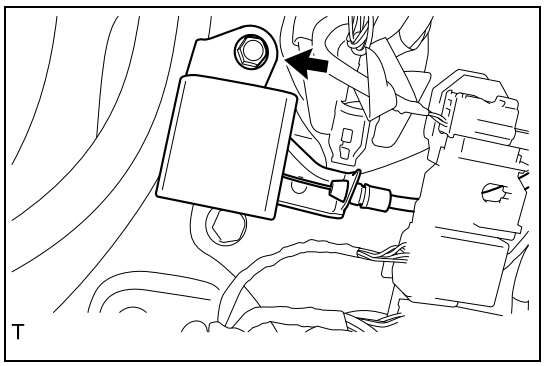

3. Removal of the pull handle ASSY
   (1) Remove the bolt and remove the pull handle ASSY.
   (2) Disconnect the cable ASSY front hood.
4. Removal of the air cleaner case SUB-ASSY (Refer to IE - 15)

DH

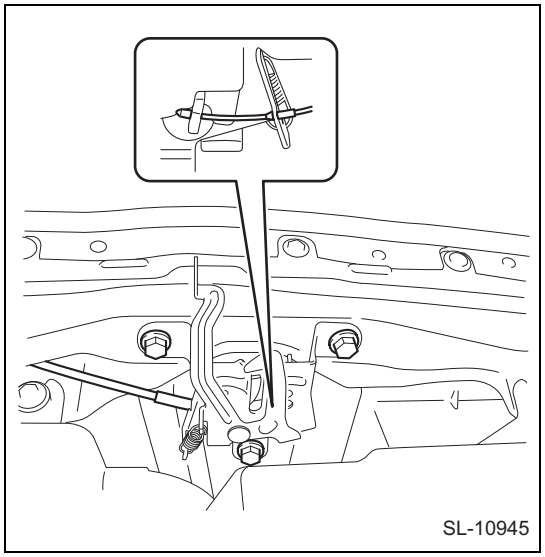

5. Removal of the lock ASSY front hood
   (1) Remove the 3 bolts, and remove the hood lock ASSY.
   (2) Disconnect the cable ASSY front hood.

6. Removal of the cable ASSY front hood
   (1) Using a flat tip screwdriver wrapped in protective tape, release each clamp, and remove the cable ASSY front hood.

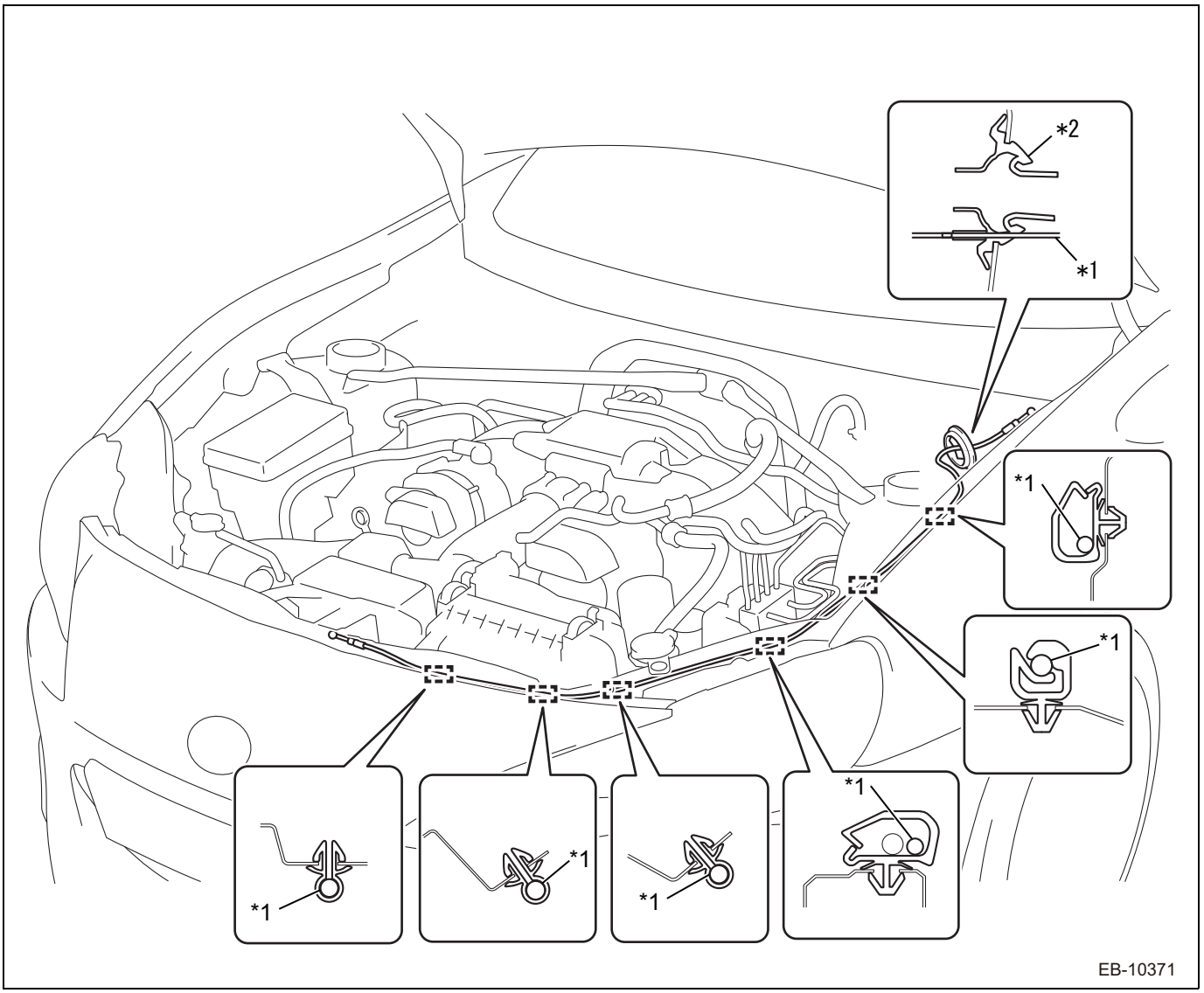

Captions in illustration

Part	Part name	Part	Part name
*1	Cable ASSY front hood	*2	Grommet

Installation

1. Installation of the cable ASSY front hood
   (1) Engage each clamp as shown in the figure to install the cable ASSY front hood.

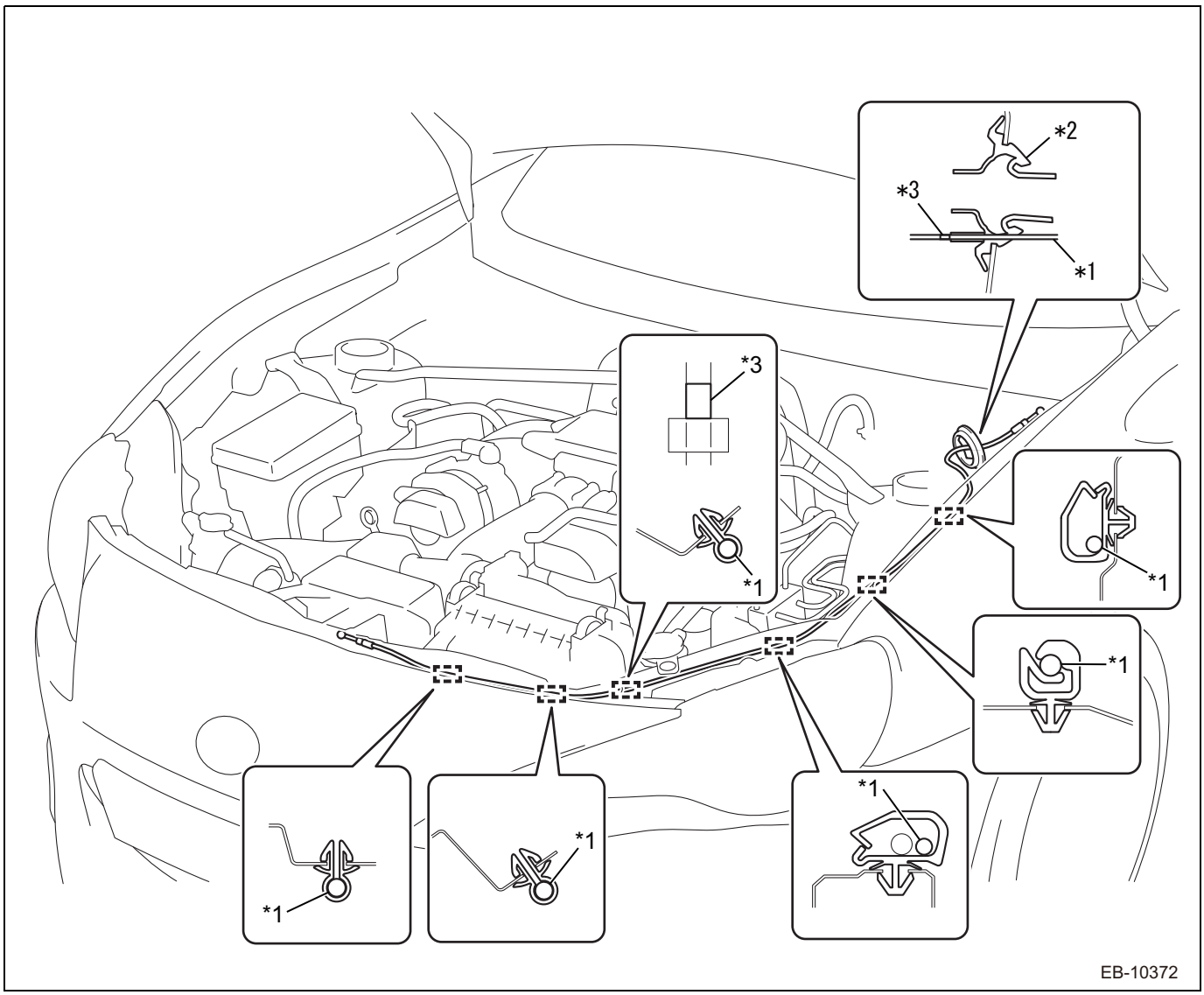

Captions in illustration

Part	Part name	Part	Part name
*1	Cable ASSY front hood	*2	Grommet
*3	Alignment marks	—	—

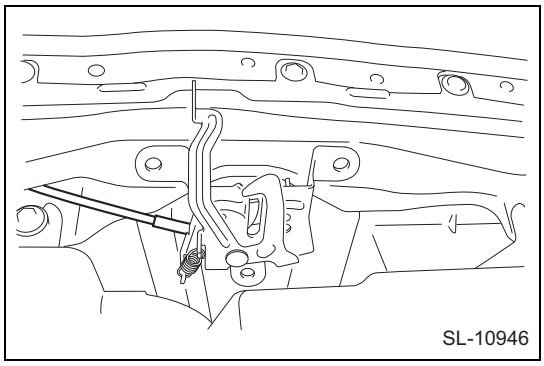

2. Installation of the lock ASSY front hood
   (1) Connect the cable ASSY front hood to the hood lock ASSY.

DH

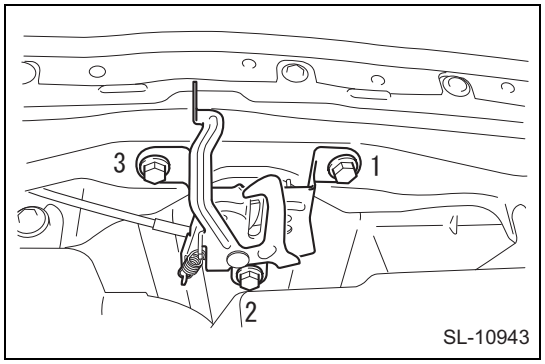

(2) Install the lock ASSY front hood with the 3 bolts in the order shown in the figure.
Standard value:T=33N·m {336kgf·cm} {24.3 ft·lbf}

3. Installation of the air cleaner case SUB-ASSY (Refer to IE - 29)
4. Installation of the pull handle ASSY
   (1) Connect the cable ASSY front hood to the pull handle ASSY.
   (2) Using the bolt, install the pull handle ASSY.
   Standard value:T=7.5N·m {77kgf·cm} {5.5ft·lbf}
5. Installation of cowl side trim board LH (Refer to IT - 58)
6. Installation of front door scuff plate LH (Refer to IT - 58)

Front door

Exploded view

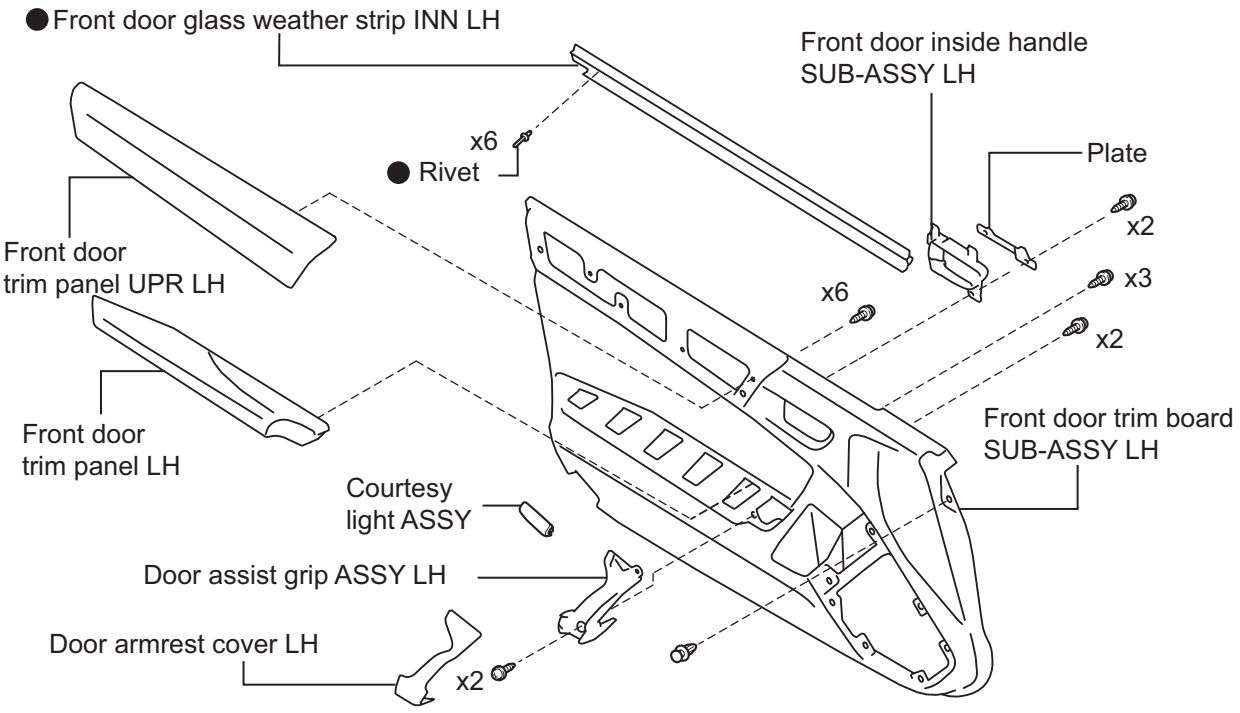

For 2 speakers:

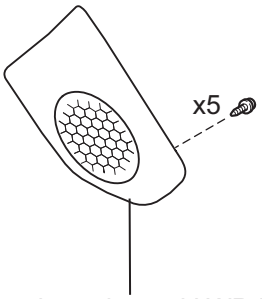

Except for 2 speakers:

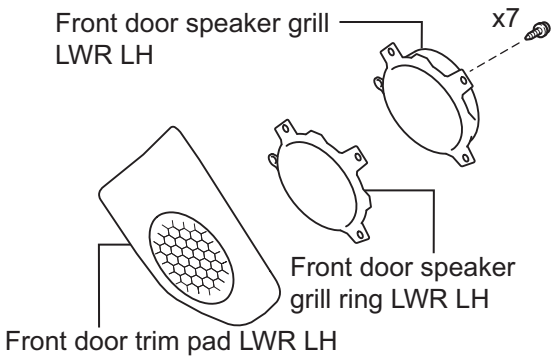

Driver's door:

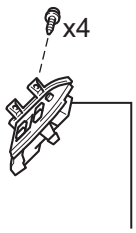

Passenger's door:

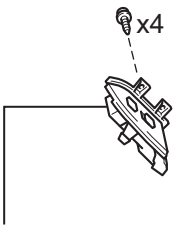

● Non-reusable part

SL-10334

DH

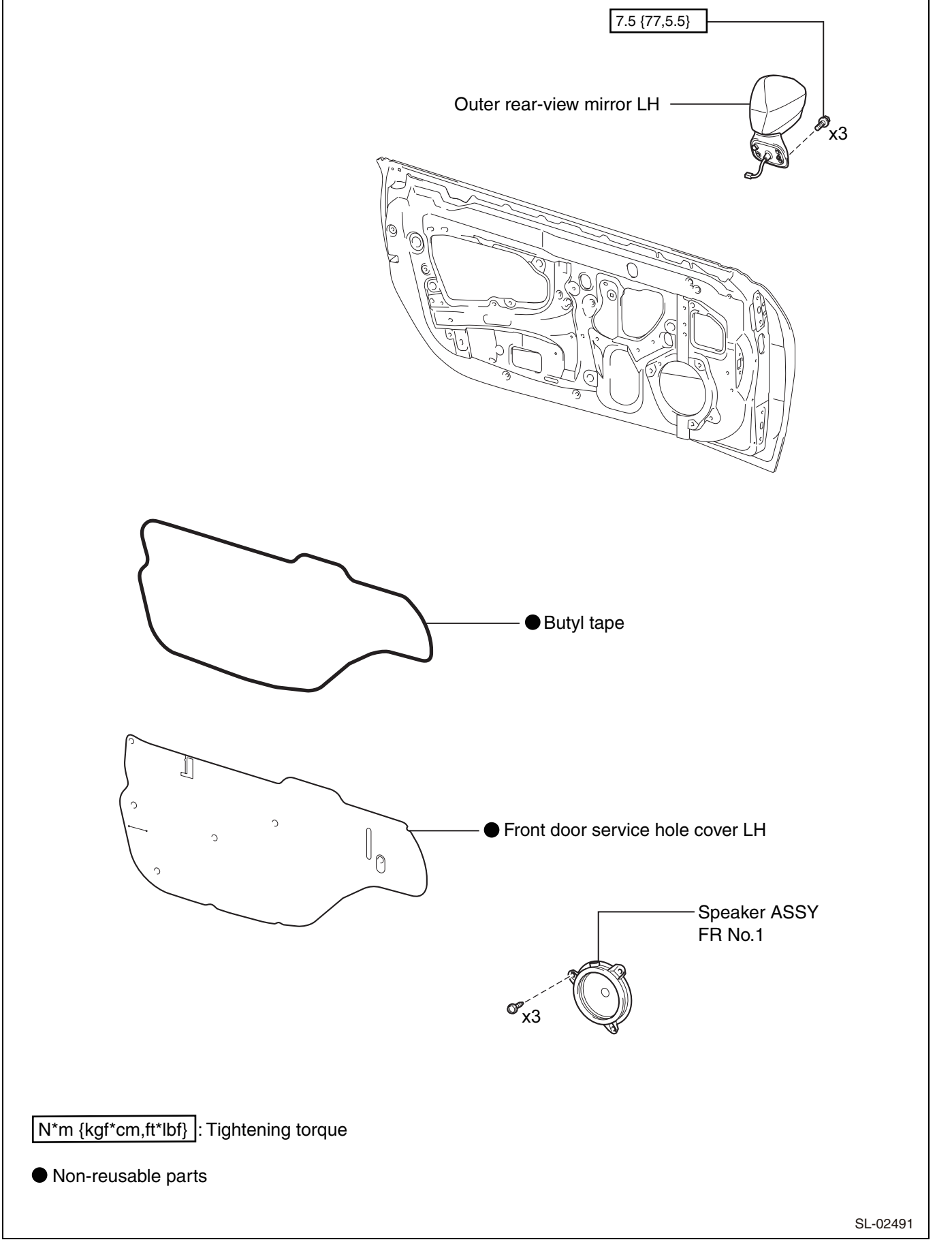

N*m {kgf*cm,ft*lbf} : Tightening torque

● Non-reusable parts

SL-02491

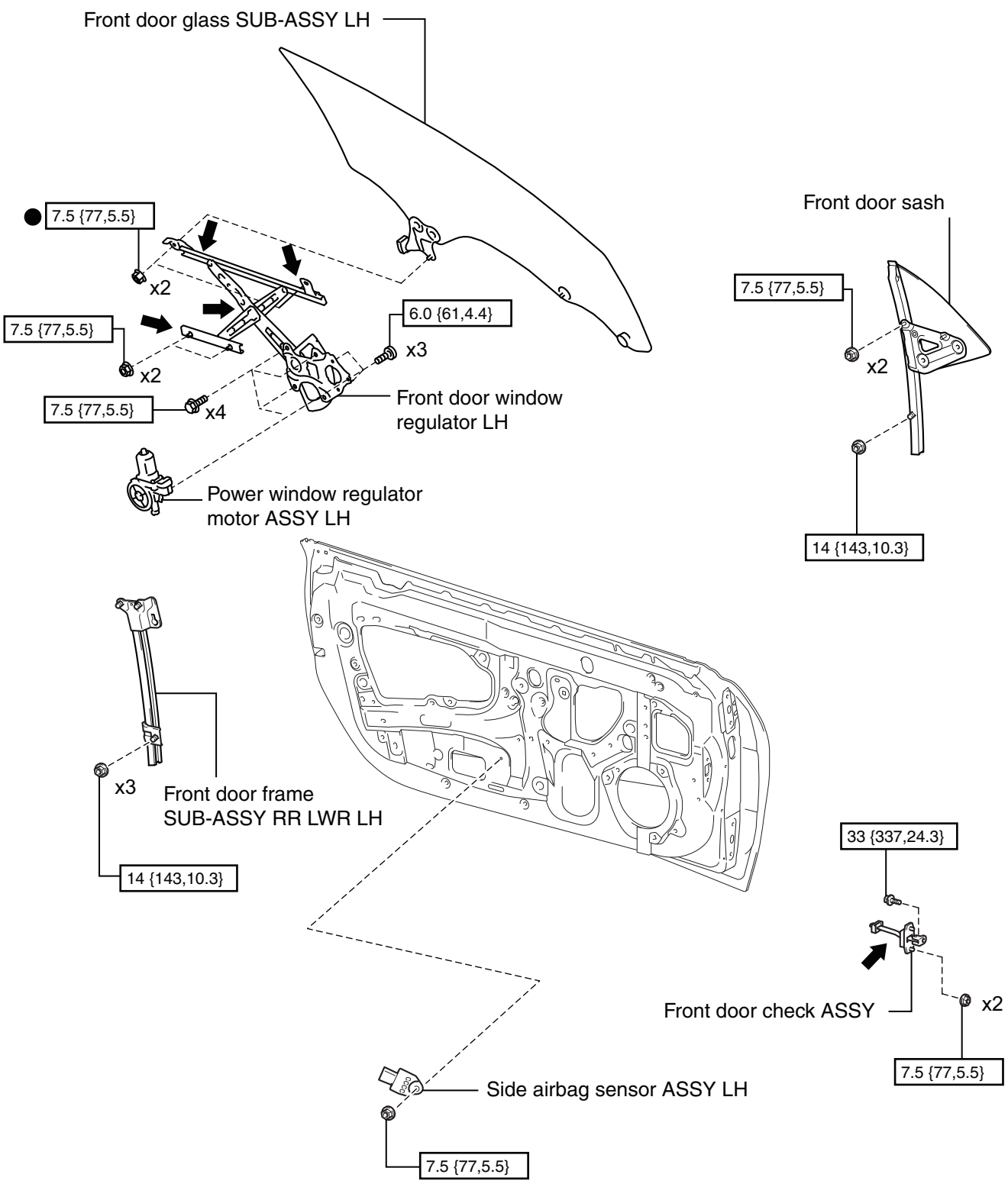

DH

N*m {kgf*cm,ft*lbf} : Tightening torque ⬅ Body grease ● Non-reusable parts

SL-02492

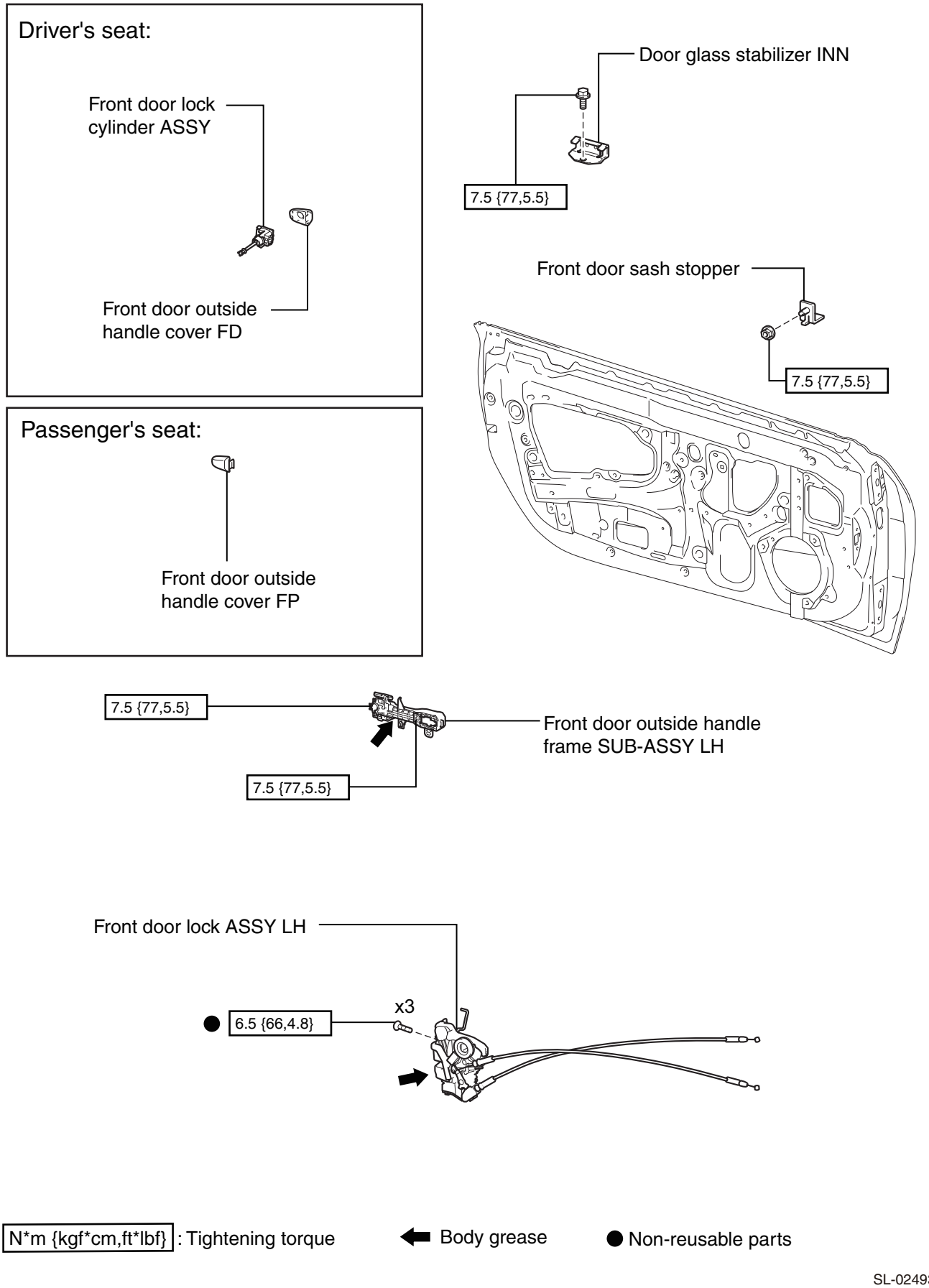
Driver's seat:
Front door lock cylinder ASSY
Front door outside handle cover FD
Passenger's seat:
Front door outside handle cover FP
Door glass stabilizer INN
7.5 {77,5.5}
Front door sash stopper
7.5 {77,5.5}
7.5 {77,5.5}
Front door outside handle frame SUB-ASSY LH
7.5 {77,5.5}
Front door lock ASSY LH
x3
6.5 {66,4.8}
N*m {kgf*cm,ft*lbf} : Tightening torque
Body grease
Non-reusable parts
SL-02493

DH

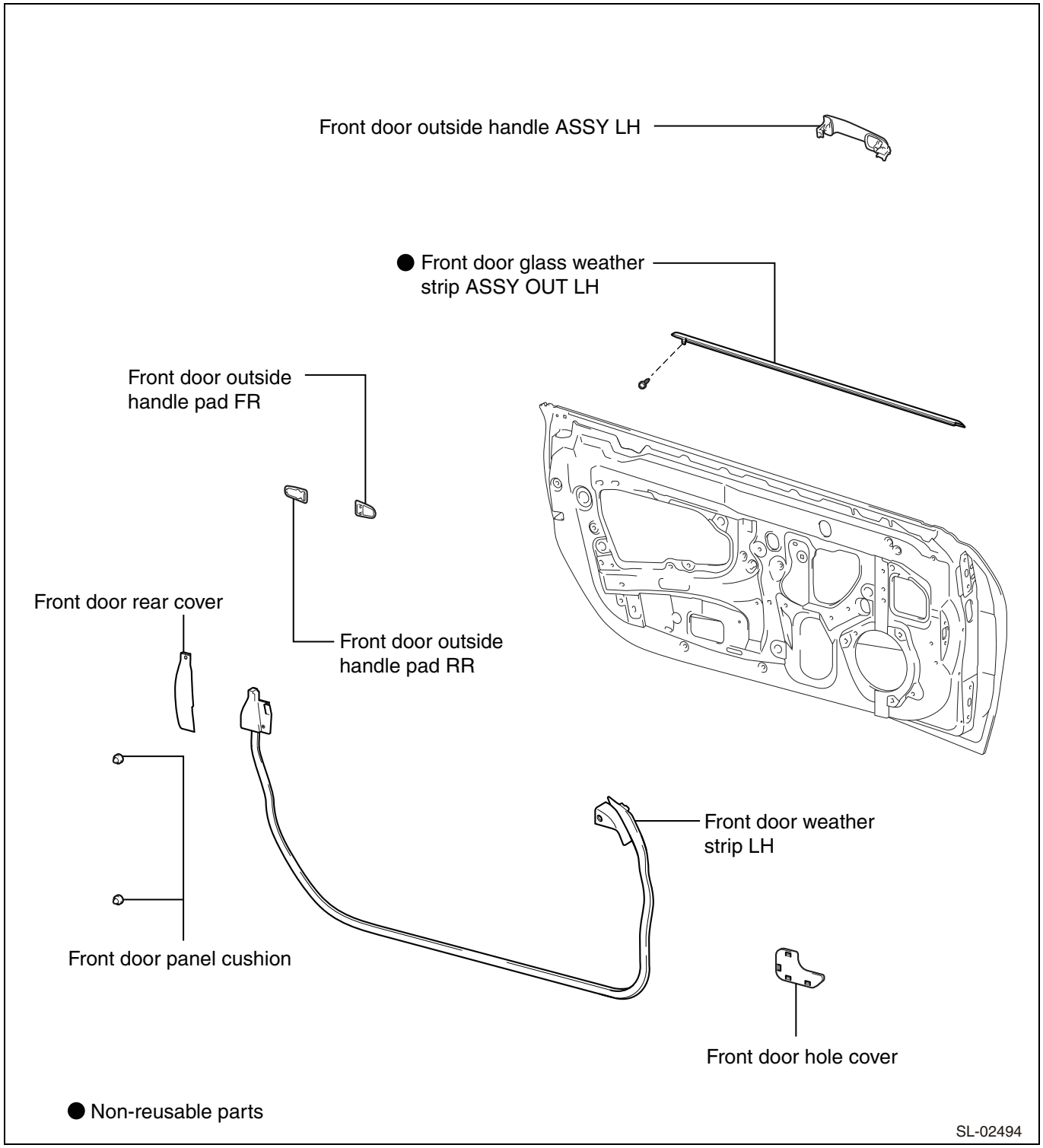

Disassembly

NOTE:

The following procedure is for LH side. Unless otherwise specified, perform the same procedures for the LH and RH side.

1. Disconnection of the battery ground terminal (Refer to BH - 31)

DH

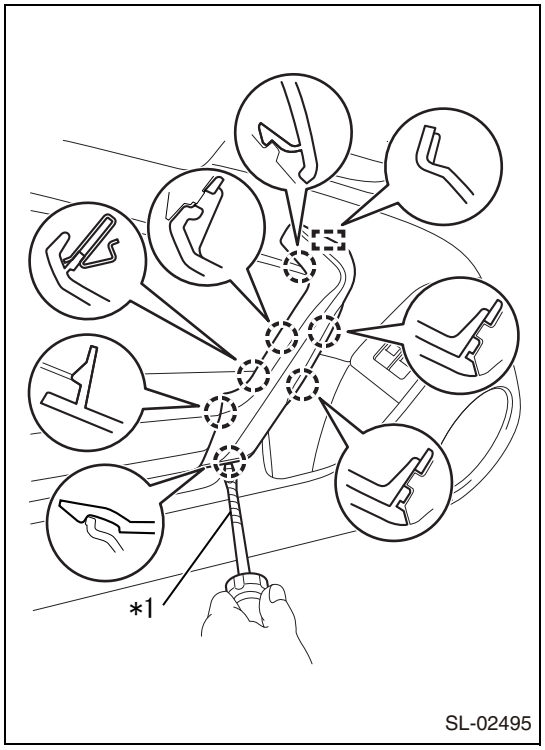

2. Removal of the door armrest cover LH

Captions in illustration

*1	Protective tape

(1) Using a flat tip screwdriver that is wrapped in protective tape, release the 7 tabs.
(2) Release the guide, and remove the door armrest cover LH.

3. Removal of the courtesy light ASSY (if there is a courtesy light) (Refer to LI - 55)

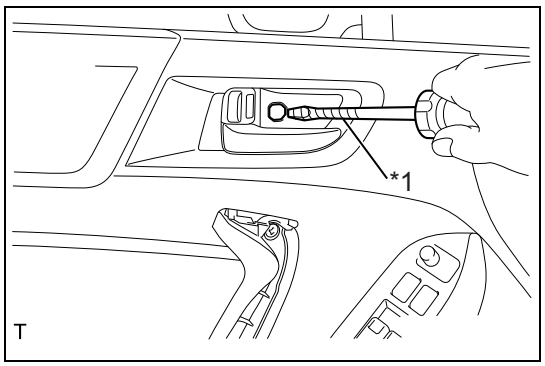

4. Removal of the front door trim board SUB-ASSY LH
(1) Using a flat tip screwdriver that is wrapped in protective tape, open the cap.

Captions in illustration

*1	Protective tape

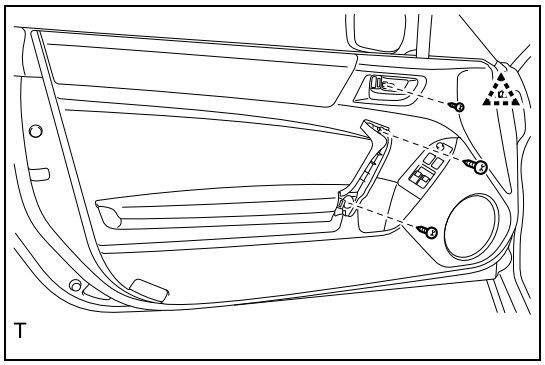

(2) Remove the clip.
(3) Remove the 3 screws.

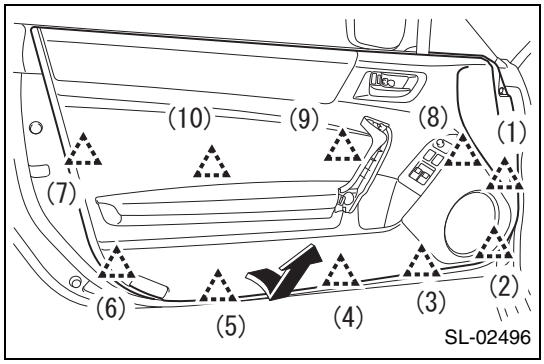

(4) While pulling the front door trim board SUB-ASSY towards, release the 10 clips in the order shown in the figure.
(5) Disconnect each connector.

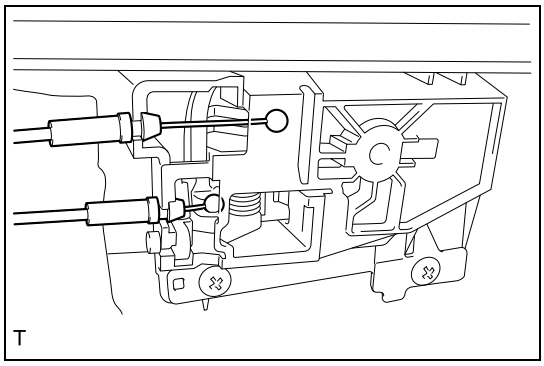

(6) Disconnect the front door lock remote control cable and the front door inside locking cable from the front door trim board SUB-ASSY LH.

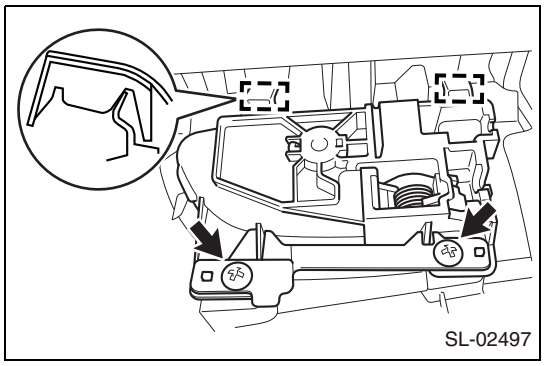

5. Removal of the front door inside handle SUB-ASSY LH
   (1) Remove the 2 screws.
   (2) Release the 2 guides, and remove the front door inside handle SUB-ASSY LH and the plate.

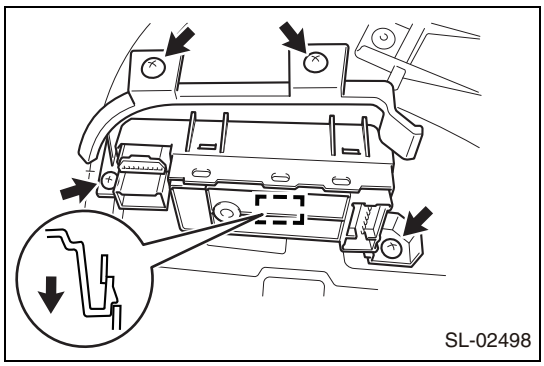

6. Removal of the power window regulator master switch ASSY W/ front armrest base panel UPR LH (driver side door)
   (1) Remove the 4 screws.
   (2) Release the tab, and remove the power window regulator master switch ASSY W/ front door armrest base panel.

7. Removal of the power window regulator master switch ASSY (driver side door) (Refer to WS - 53)

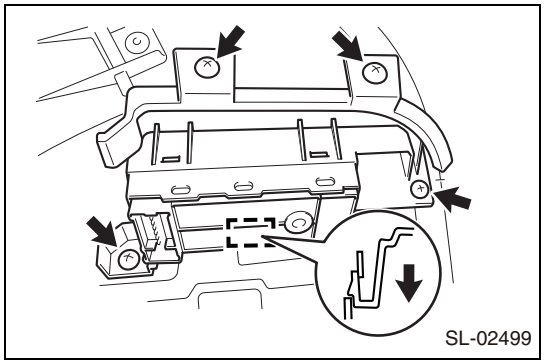

8. Removal of the power window regulator switch ASSY W/ front armrest base panel UPR RH (passenger side door)
   (1) Remove the 4 screws.
   (2) Release the tab, and remove the power window regulator switch ASSY W/ front door armrest base panel.
9. Removal of the power window regulator switch ASSY (passenger side door) (Refer to WS - 55)
10. Removal of the outer mirror switch ASSY (Refer to MX - 14)

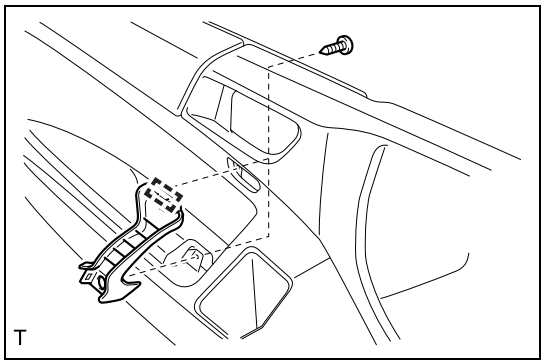

11. Removal of the door assist grip ASSY LH
    (1) Remove the 2 screws.
    (2) Release the guide, and remove the door assist grip ASSY LH.

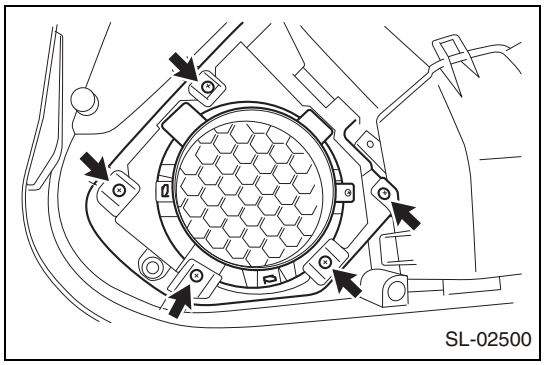

12. Removal of the front door trim pad LWR LH (2-speaker type)
    (1) Remove the 5 screws, and remove the front door trim pad LWR LH.

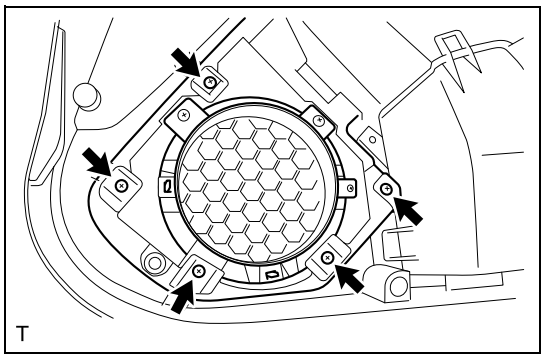

13. Removal of the front door trim pad LWR LH (6-speaker type)
    (1) Remove the 5 screws, and remove the front door trim pad LWR LH.

DH

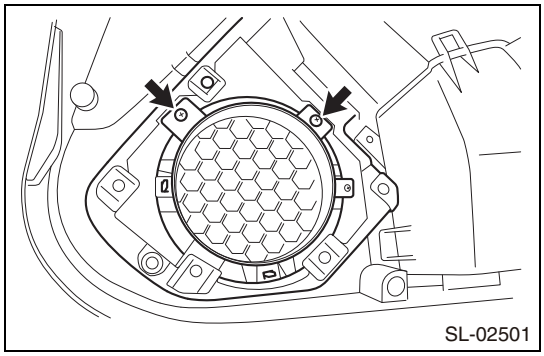

14. Removal of the front door speaker LH (6-speaker type)
    (1) Remove the 2 screws, and remove the front door speaker LH.
    (2) Remove the front door speaker grill LH from the front door speaker LH.

15. Removal of the front door glass weather strip INN LH
    (1) Set the 4 mm {0.1575 in} drill bit in the air drill.
    (2) Wrap tape around the 4 mm {0.1575 in} drill bit about 5 mm {0.1969 in} behind the tip.
        NOTE:
        Wrapping the tape prevents grinding too deep.
    (3) Lightly press the air drill against the rivet, grind the flange portion of the rivet, and remove the 6 rivets.
        CAUTION:
        - If you press the air drill too hard, the rivet will turn together, and will not be cut.
        - If you pry with the air drill while grinding, you may grind the hole where the rivet is installed or may damage the drill bit.
        - Be careful, because the cut rivet will be hot.

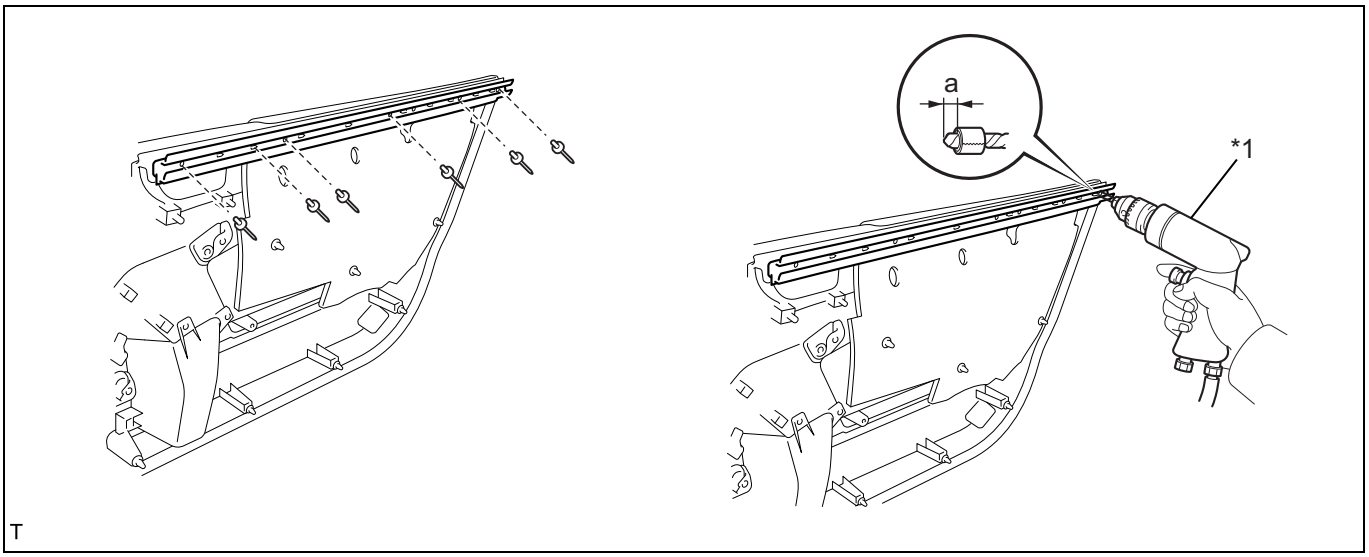

T

Captions in illustration

*1	Air drill	-	-
a	5 mm {0.1969 in}	-	-

DH

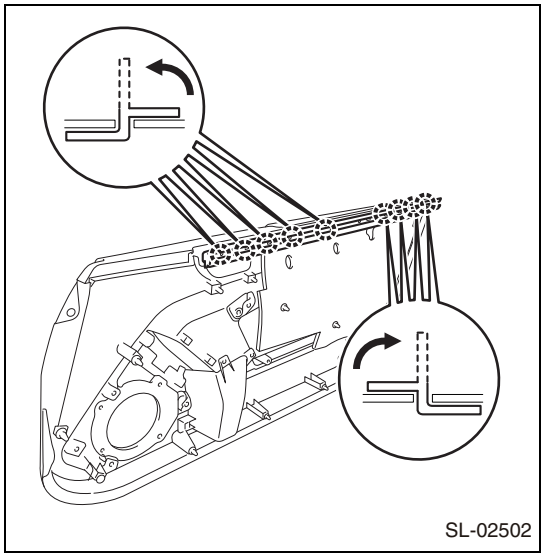

(4) Release the 9 tabs, and remove the front door glass weather strip INN LH.

16. Removal of the speaker ASSY FR NO. 1 (if there is a speaker) (Refer to AV - 18)

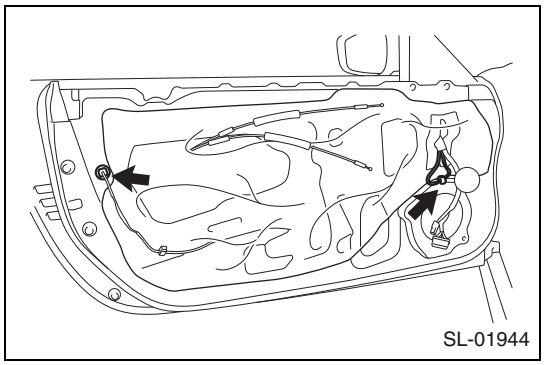

17. Removal of the front door service hole cover LH
    (1) Disconnect the connectors for the front door lock ASSY and the outer rear-view mirror ASSY.
    (2) Remove the front door service hole cover LH.
    CAUTION:
    Remove any butyl tape left on the door panel.

18. Removal of the outer rear-view mirror LH (Refer to MX - 6)

19. Removal of the front door glass weather strip ASSY OUT LH (Refer to ET - 38)

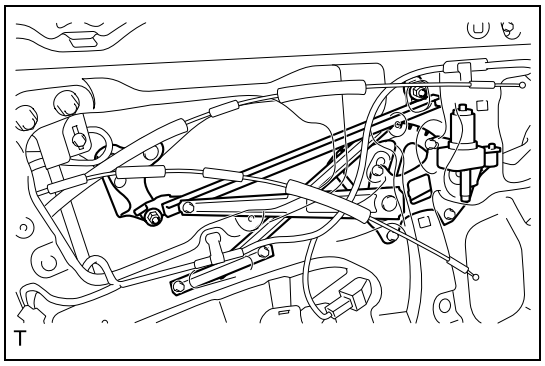

20. Removal of the front door glass SUB-ASSY LH
    (1) Reconnect the battery ground terminal.
    (2) Connect the power window regulator master switch ASSY connector and move the front door glass SUB-ASSY LH until you can see the front door glass SUB-ASSY LH mounting bolt.
    (3) Disconnect the battery ground terminal.
    (4) Disconnect the power window regulator master switch ASSY connector.

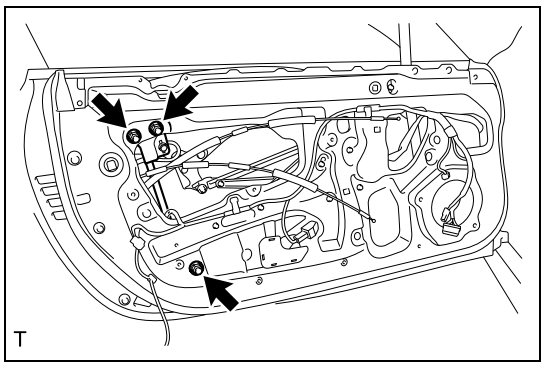

(5) Remove the 3 nuts, disconnect the front door frame SUB-ASSY RR LWR LH, and slide the front door frame SUB-ASSY RR LWR LH beyond the mounting section.

DH

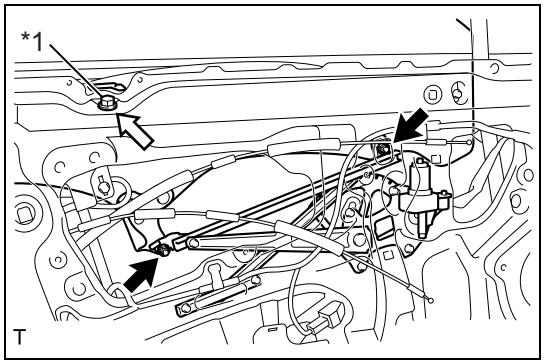

(6) Insert a flat tip screwdriver into the slit at the glass bolt tip. While holding it, remove the 2 nuts and disconnect the front glass SUB-ASSY LH.

(7) Loosen the front stabilizer mounting bolt.

CAUTION:

Be sure to hold the front glass SUB-ASSY LH and the front door frame SUB-ASSY RR LWR LH securely so that they don't fall.

Captions in illustration

*1	Front stabilizer mounting bolt

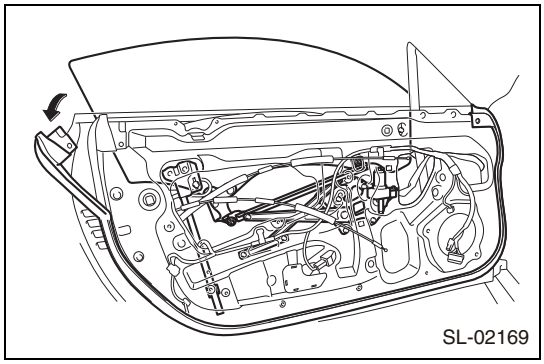

(8) Remove the front door rear cover LH, and turn over the rear end of the front door weather strip so that the front glass SUB-ASSY LH can be removed.

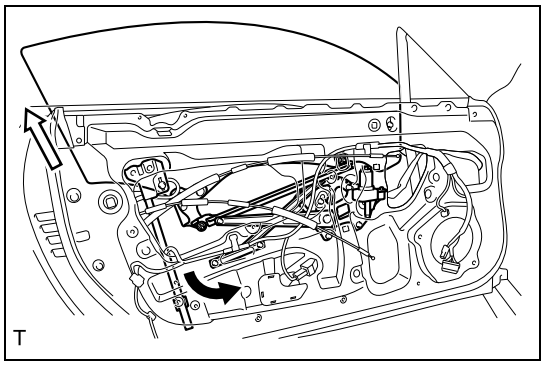

(9) While lifting the front glass SUB-ASSY LH up, let the front door frame SUB-ASSY RR LWR LH slide down, and pull the front glass SUB-ASSY LH out from the front door frame SUB-ASSY RR LWR LH.

CAUTION:

- Be sure to hold the front glass SUB-ASSY LH and the front door frame SUB-ASSY RR LWR LH securely so that they don't fall.
- Do not damage the front door glass.

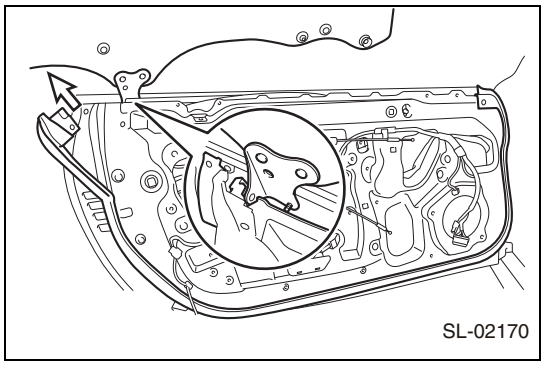

(10) From the position shown in the figure, remove the front glass SUB-ASSY LH.

CAUTION:

Do not damage the front door weather strip.

NOTE:

The front glass SUB-ASSY LH cannot be removed from any position other than the one in the figure.

21. Removal of the front door frame SUB-ASSY RR LWR LH.
    (1) Remove the front door frame SUB-ASSY RR LWR LH from the front door frame.
22. Removal of the door glass stabilizer INN
    (1) Remove the bolt and remove the door glass stabilizer INN.

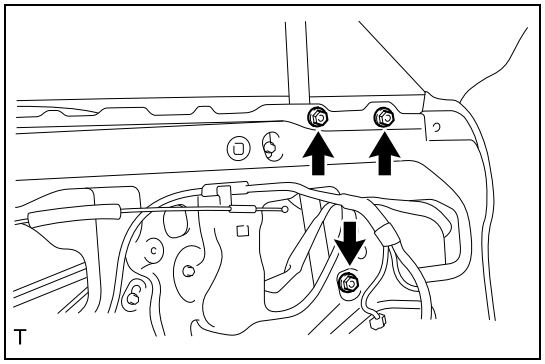

23. Removal of the front door sash
    (1) Remove the 3 nuts.

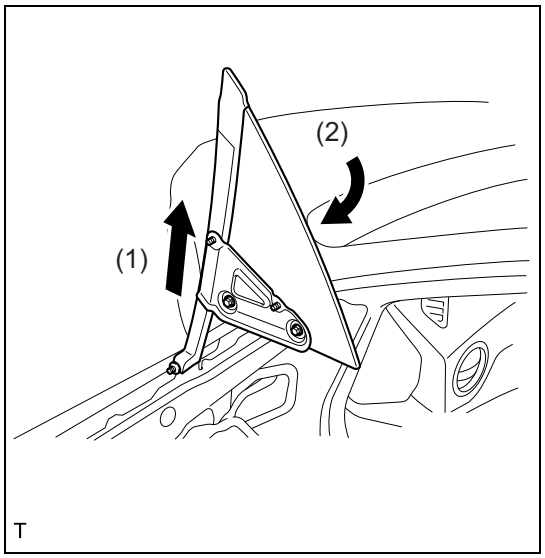

    (2) In the order shown in the figure, turn the front door sash, and pull it out.
    CAUTION:
    - The mounting bolt of the front door sash will interfere, so be sure to perform this task in the order in the figure.
    - To avoid damaging the glass, hold it securely.

24. Removal of the front door sash stopper
    (1) Remove the nut and remove the front door sash stopper.

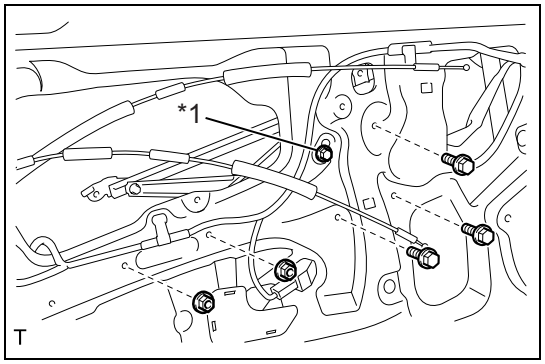

25. Removal of the front door window regulator W/ motor ASSY
    (1) Disconnect the connector.
    (2) Loosen the tack bolt.
    CAUTION:
    If you remove the tack bolt, and the other 3 bolts and 2 nuts are removed, the front door window regulator W/ motor ASSY may fall and be disfigured. Do not remove it.
    (3) Remove the 3 bolts and the 2 nuts.
    (4) Remove the tack bolt and remove the front door window regulator W/ motor ASSY.

Captions in illustration

*1	Tack bolt

26. Removal of the power window regulator motor ASSY LH (Refer to WS - 58)
27. Removal of the front door weather strip LH
    (1) For the remaining front door weather strip LH, using a clip remover, release the 15 clips, and remove the front door weather strip LH.

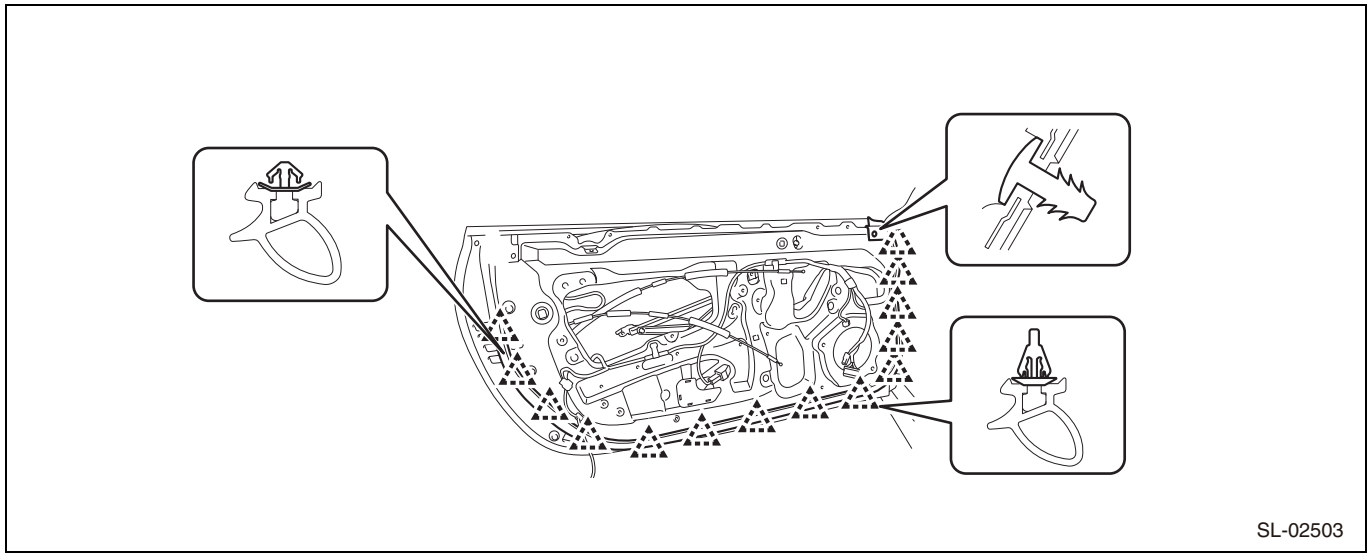

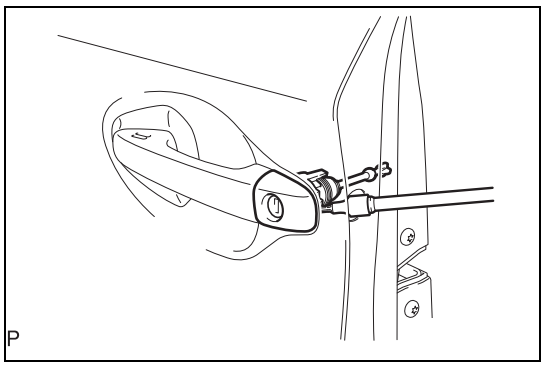

28. Removal of the front door outside handle cover W/ lock cylinder ASSY (driver side door)
    (1) Using a Torx socket wrench, remove the Torx screw, and remove the front door outer handle cover with lock cylinder ASSY LH.

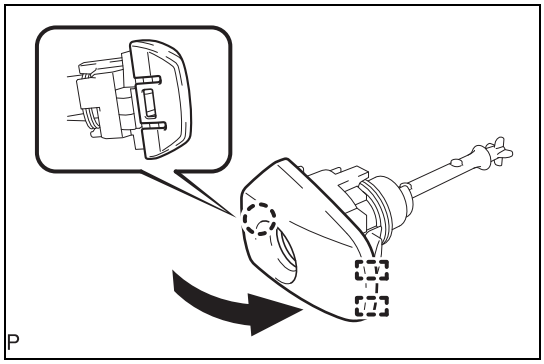

29. Removal of the front door outside handle cover FD (driver side door)
    (1) Using a flat tip screwdriver, release the tab and the 2 guides, and remove the front door outer handle cover FD from the front door lock cylinder ASSY.

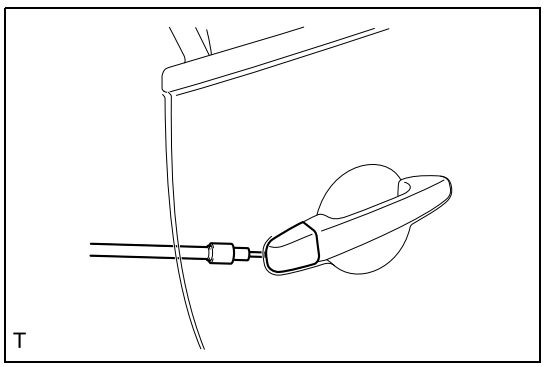

30. Removal of the front door outside handle cover FP (passenger side door)
    (1) Using a Torx socket wrench, remove the Torx screw, and remove the front door outside handle cover FP.

31. Removal of the front door lock ASSY LH (Refer to DL - 102)

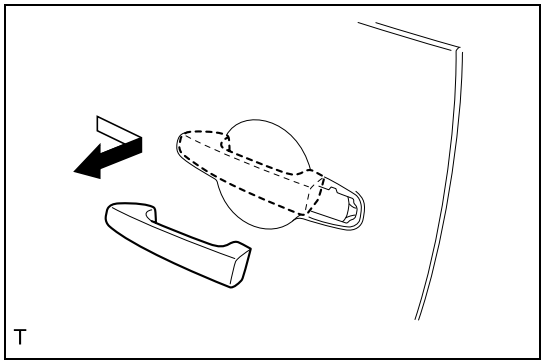

32. Removal of the front door outside handle ASSY LH
    (1) Pull the front door outside handle ASSY LH towards the back of the vehicle, and release the front door outside handle frame SUB-ASSY LH.
    (2) Pull the front door outside handle ASSY LH towards you, and remove it from the front door outside handle frame LH.

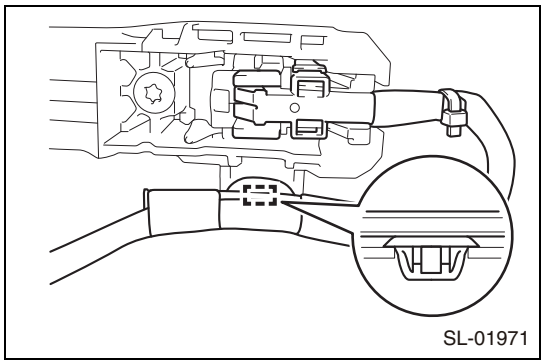

33. Removal of the front door outside handle ASSY LH (if there is smart entry)
    (1) Use the clip remover to release the clamp.

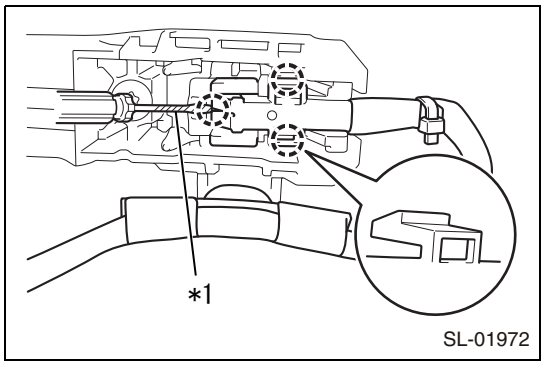

    (2) Using a thin flat tip screwdriver that is wrapped in protective tape, release the 3 tabs and lift the connector cover.

Captions in illustration

*1	Protective tape

    (3) Disconnect the connector.

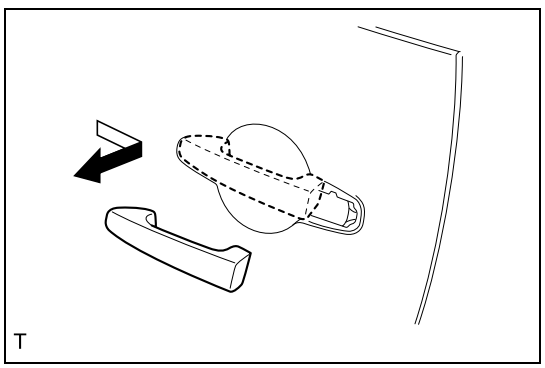

    (4) Pull the front door outside handle ASSY LH towards the back of the vehicle, and release the front door outside handle frame SUB-ASSY LH.
    (5) Pull the front door outside handle ASSY LH towards you, and remove it from the front door outside handle frame SUB-ASSY LH.

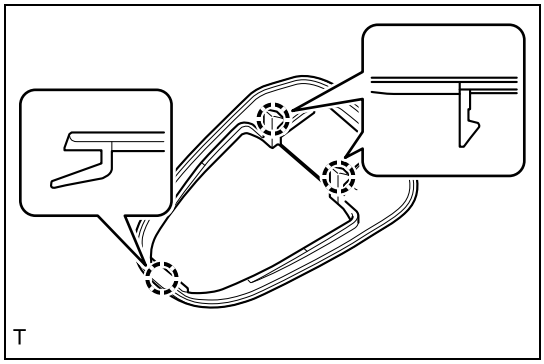

34. Removal of the front door outside handle pad FR
    (1) Release the 3 tabs and remove the front door outside handle pad FR.

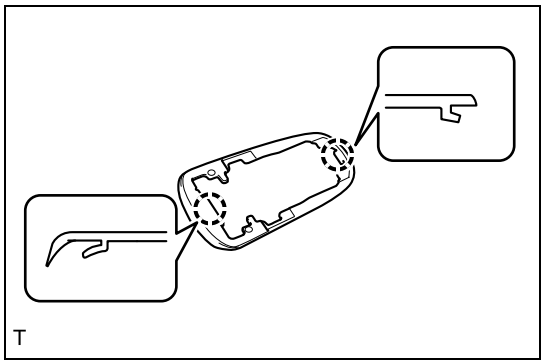

35. Removal of the front door outside handle pad RR
    (1) Release the 2 tabs and remove the front door outside handle pad RR.

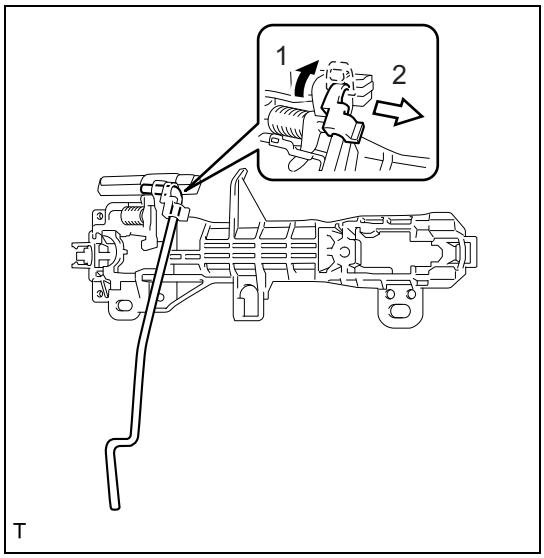

36. Removal of the front door lock open rod LH
    (1) In the order shown in the figure, release the front door outside handle snap, and remove the front door lock open rod LH.

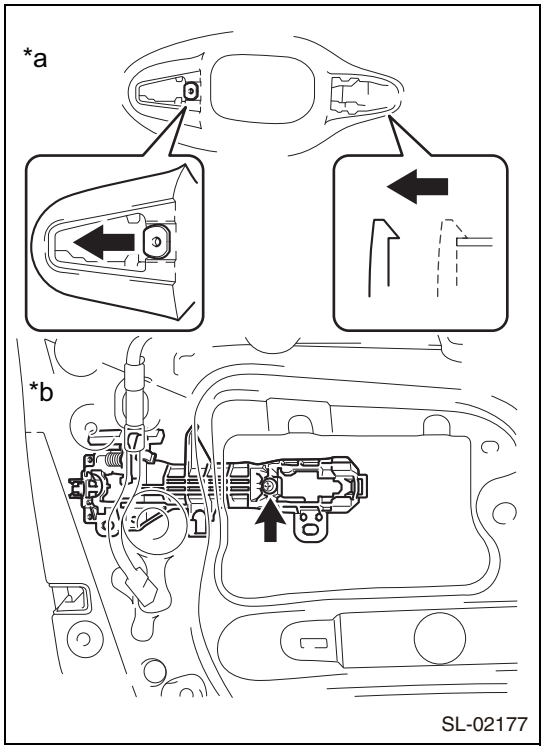

37. Removal of the front door outside handle frame SUB-ASSY LH
    (1) Using a T30 Torx socket wrench, loosen the Torx screw.
    (2) Pull towards the front of the vehicle, release the tab, and remove the front door outside handle frame LH.

Captions in illustration

*a	Vehicle exterior
*b	Vehicle interior

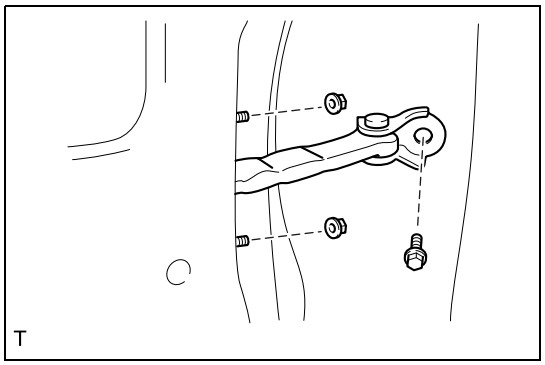

38. Removal of the front door check ASSY
    (1) Remove the bolt and the 2 nuts and remove the front door check ASSY.

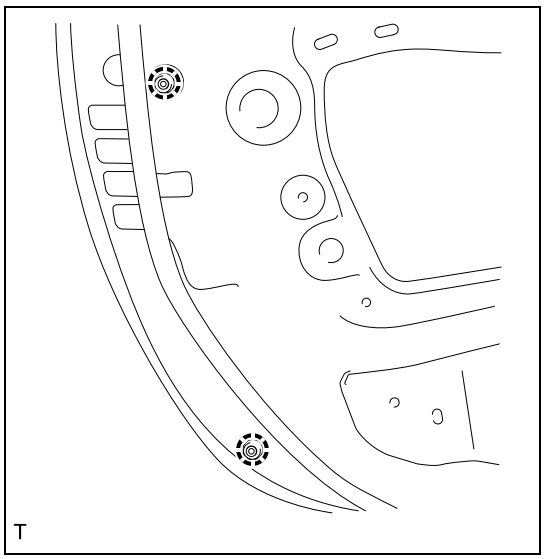

39. Removal of the front door panel cushion
    (1) Release the tabs and remove the 2 front door panel cushions.

40. Removal of the side air bag sensor ASSY LH (Refer to RS - 269)

DH

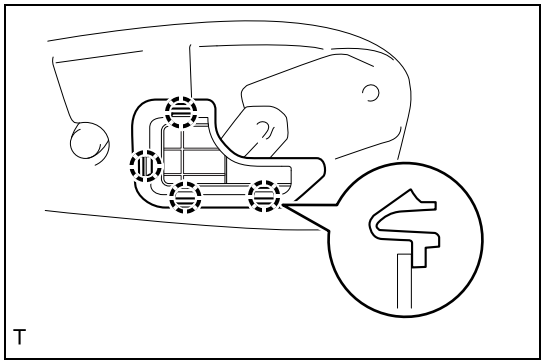

41. Removal of the front door hole cover
    (1) Release the 4 tabs and remove the front door hole cover.

Assembly

NOTE:

The following procedure is for LH side. Unless otherwise specified, perform the same procedures for the LH and RH side.

1. Applying of body grease
   (1) Apply body grease to the sliding parts of the front door window regulator, the front door check ASSY LH, the front door outside handle frame SUB-ASSY LH, and the front door lock ASSY LH.

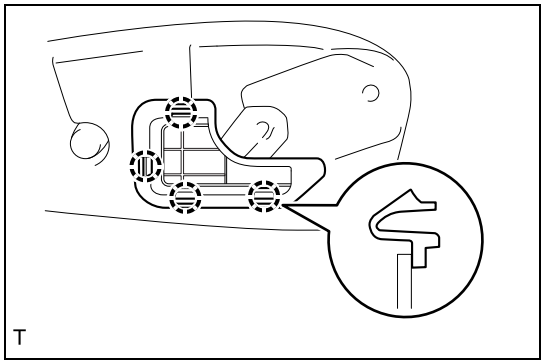

2. Installation of the front door hole cover
   (1) Fit in the 4 tabs and install the front door hole cover.
3. Installation of the side air bag sensor ASSY LH (Refer to RS - 267)

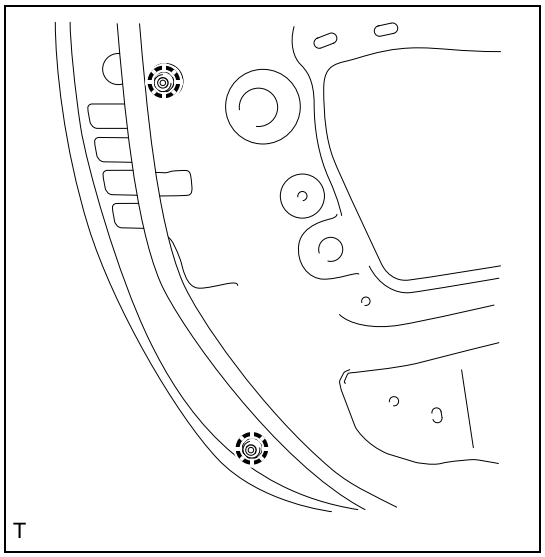

4. Installation of the front door panel cushions
   (1) Fit in the 2 tabs and install the 2 front door panel cushions.

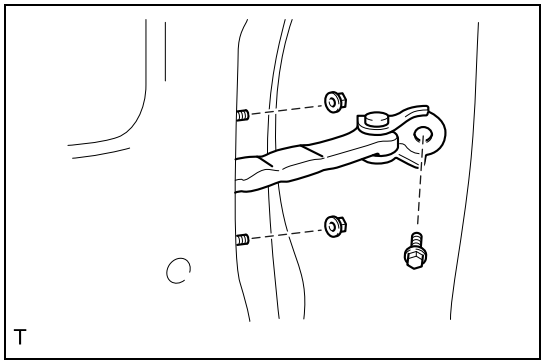

5. Installation of the front door check ASSY
   (1) Using 2 nuts, install the front door check ASSY.
   Standard value:T=7.5N·m {77kgf·cm} {5.5ft·lbf}
   (2) Install the bolt.
   Standard value:T=33N·m {336kgf·cm} {24.3ft·lbf}

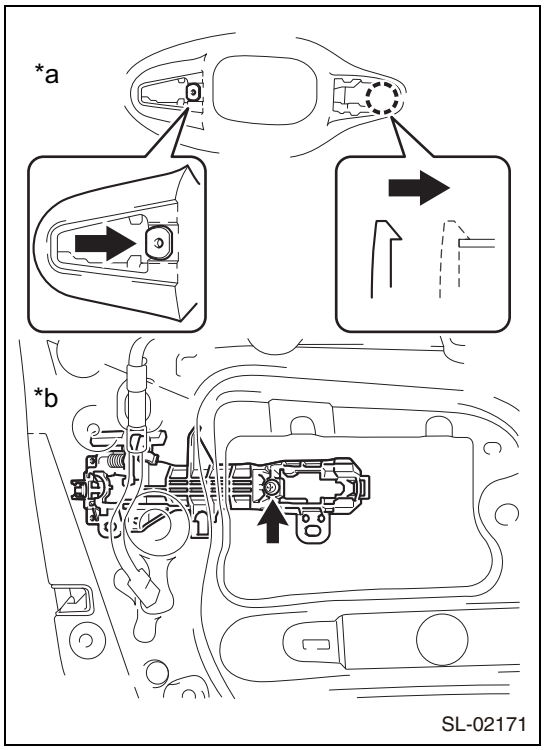

6. Installation of the front door outside handle frame SUB-ASSY LH
   (1) Pull towards the back of the vehicle, fit in the tab, and temporarily install the front door outside handle frame SUB-ASSY LH on the front door panel.
   (2) Using a Torx socket wrench and a Torx screw, install the front door outer handle frame SUB-ASSY LH.
   Standard value:T=7.5N·m {77kgf·cm} {5.5ft·lbf}

Captions in illustration

*a	Vehicle exterior
*b	Vehicle interior

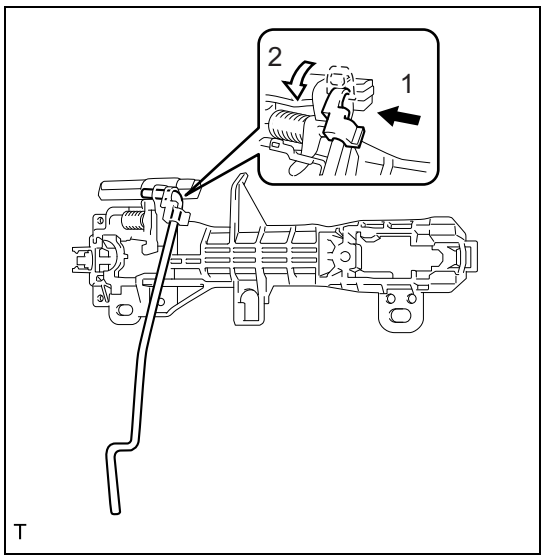

7. Installation of the front door lock open rod LH
   (1) In the order shown in the figure, fit in the front door outside handle snap, and attach the front door lock open rod LH to the front door outside handle frame LH.

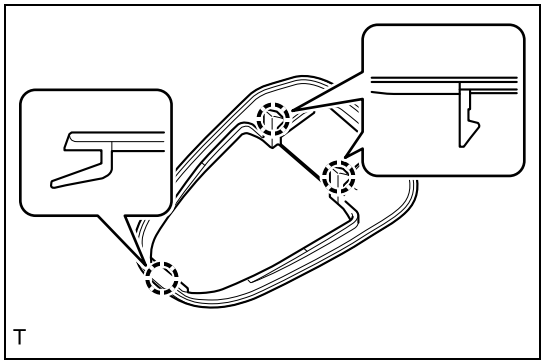

8. Installation of the front door outside handle pad FR
   (1) Fit in the 3 tabs and install the front door outside handle pad FR.

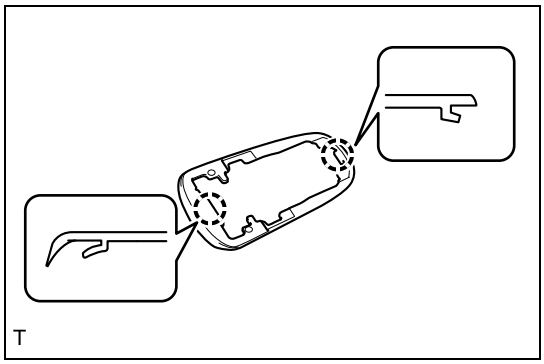

9. Installation of the front door outside handle pad RR
   (1) Fit in the 2 tabs and install the front door outside handle pad RR.

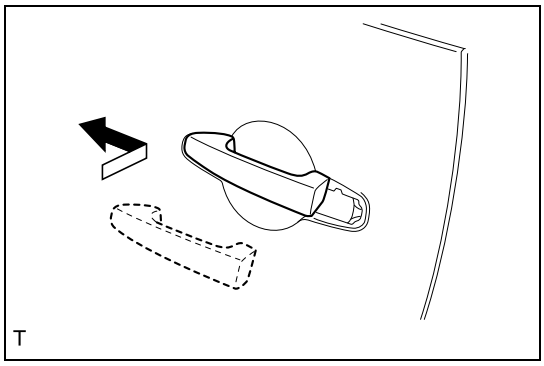

10. Installation of the front door outside handle ASSY LH (if there is smart entry)
    (1) Insert the front end of the front door outside handle ASSY LH into the front door outside handle frame SUB-ASSY LH.
    (2) Insert the rear end of the front door outside handle ASSY LH into the front door outside handle frame SUB-ASSY LH, and install it by sliding it towards the front of the vehicle.

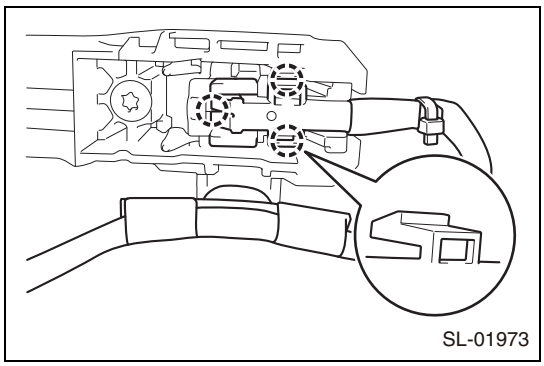

    (3) Connect the connector.
    (4) Fit in the 3 claws.

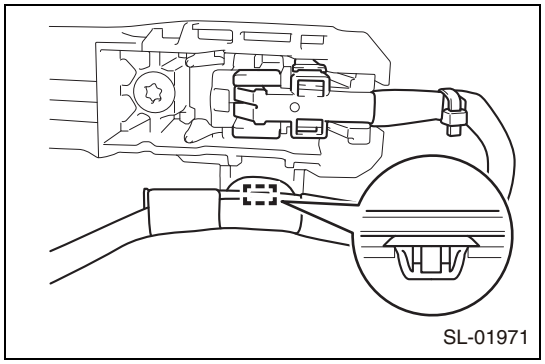

(5) Fit in the clamp.

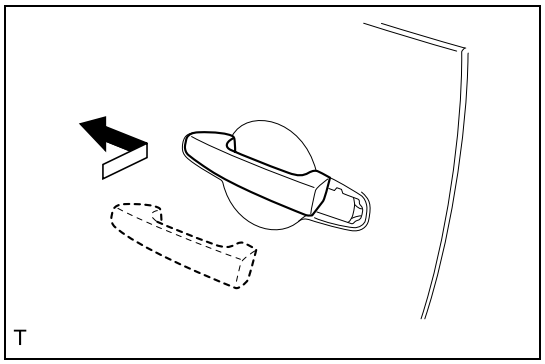

11. Installation of the front door outside handle ASSY LH (if there is no smart entry)
    (1) Insert the front end of the front door outside handle ASSY LH into the front door outside handle frame SUB-ASSY LH.

12. Installation of the front door lock ASSY LH (Refer to DL - 102)

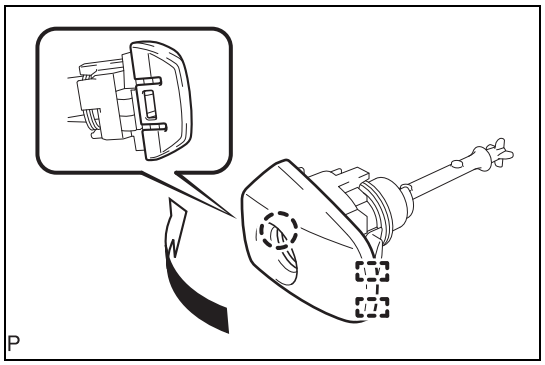

13. Installation of the front door outside handle cover FD (driver side door)
    (1) Fit in the tab and the 2 guides, and install the front door outside handle cover FD on the front door lock cylinder ASSY.

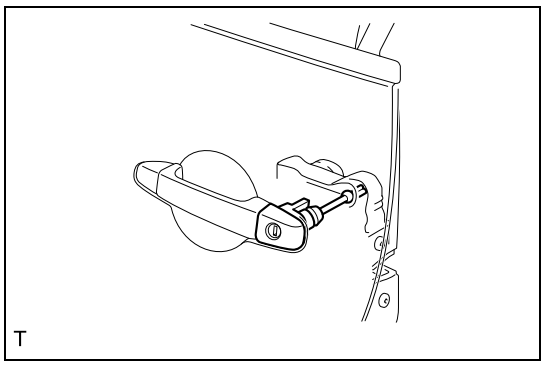

14. Installation of the front door outside handle cover W/ lock cylinder ASSY (driver side door)
    (1) Assemble the front door outside handle cover W/ lock cylinder ASSY.
    NOTE:
    Check that the front door lock cylinder rod is inserted into the front door lock ASSY LH.

DH

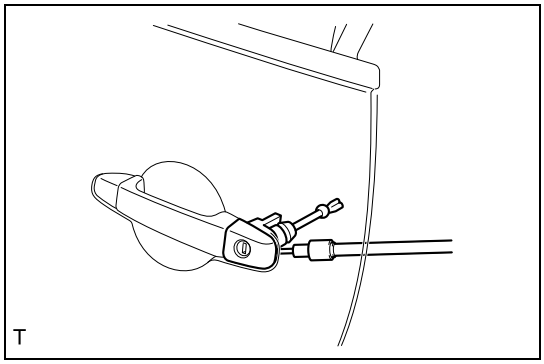

(2) Using a Torx socket wrench and a Torx screw, install the front door outside handle cover W/ lock cylinder ASSY.
Standard value:T=7.5N·m {77kgf·cm} {5.5ft·lbf}

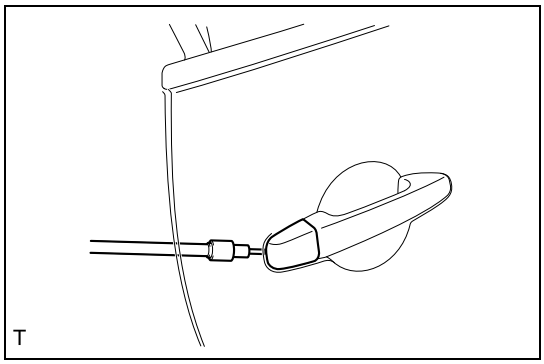

15. Installation of the front door outside handle cover FP (passenger side door)
    (1) Using a Torx socket wrench and a Torx screw, install the front door outside handle cover FP.
    Standard value:T=7.5N·m {77kgf·cm} {5.5ft·lbf}

16. Installation of the front door weather strip LH.
    (1) Fit in the 15 clips.
    (2) Install the 3 rear sections after installing the front door glass weather strip ASSY OUT LH.

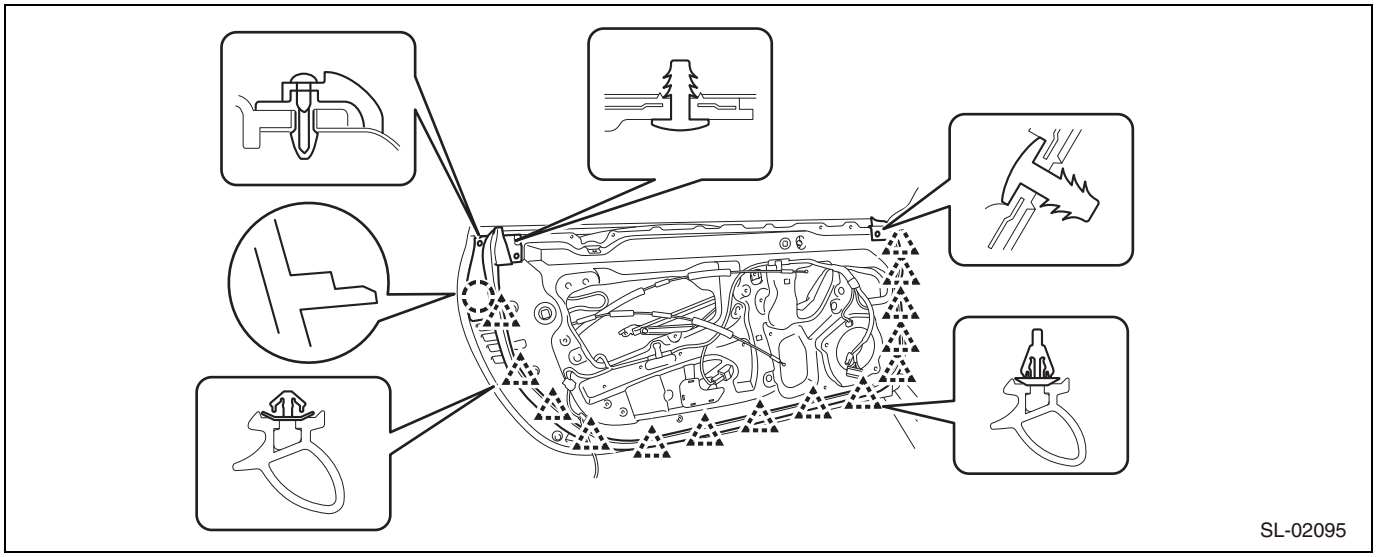

17. Installation of the power window regulator motor ASSY LH (Refer to WS - 58)

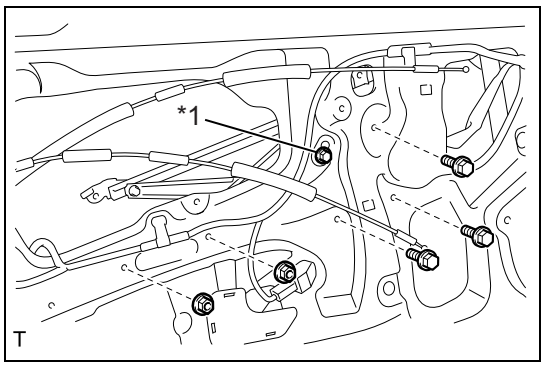

18. Installation of the front door window regulator W/ motor ASSY
    (1) With the tack bolt, temporarily install the front door window regulator W/ motor ASSY on the front door panel.
    (2) With 3 bolts and 2 nuts, install the front door window regulator W/ motor ASSY.
    Standard value:T=7.5N·m {77kgf·cm} {5.5ft·lbf}
    (3) Completely tighten the tack bolt.
    Standard value:T=7.5N·m {77kgf·cm} {5.5ft·lbf}
    (4) Connect the connector.

Captions in illustration

*1	Tack bolt

DH

19. Installation of the front door sash stopper
    (1) Install the front door sash stopper with a bolt.
    Standard value:T=7.5N·m {77kgf·cm} {5.5ft·lbf}

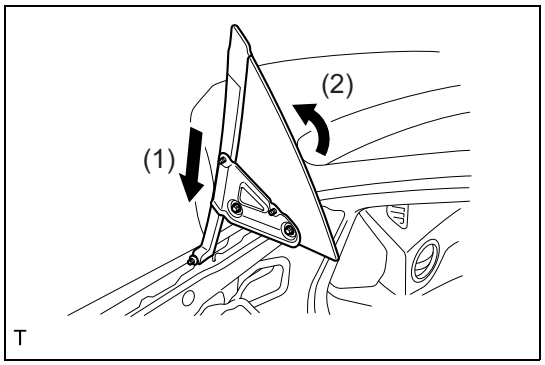

20. Installation of the front door sash
    (1) As in the figure, insert the front door sash into the front door frame at a right angle.
    CAUTION:
    - The mounting bolt of the front door sash will interfere, so be sure to perform this task in the order in the figure.
    - To avoid damaging the front door sash, hold it securely.
    (2) Turn the front door sash 90°.

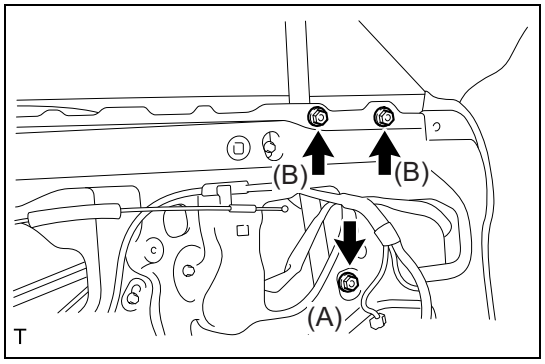

    (3) Using 3 nuts, install the front door sash.
    Standard value:Nut (A)
    T=14N·m {143kgf·cm} {10.3ft·lbf}
    Standard value:Nut (B)
    T=7.5N·m {77kgf·cm} {5.5ft·lbf}

21. Installation of the front door frame SUB-ASSY RR LWR LH
    (1) Using 3 nuts, install the front door frame SUB-ASSY RR LWR LH.
    Standard value:T=14N·m {143kgf·cm} {10.3ft·lbf}

22. Installation of the front door glass SUB-ASSY LH
    (1) Reconnect the battery ground terminal.
    (2) Connect the power window regulator master switch ASSY connector and move the front door window regulator until you can see where the front door glass SUB-ASSY LH is installed.
    (3) Disconnect the battery ground terminal.
    (4) Disconnect the power window regulator master switch ASSY connector.

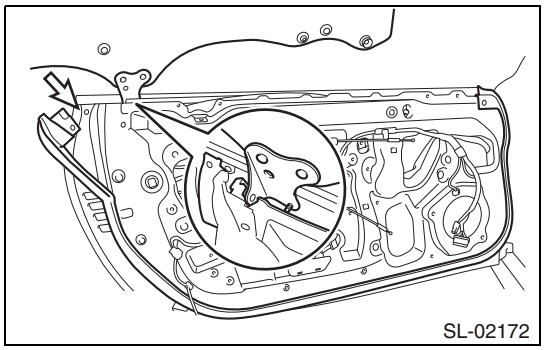

    (5) From the position shown in the figure, insert the front door glass SUB-ASSY LH into the front door frame.
    CAUTION:
    Do not damage the front door weather strip LH.
    NOTE:
    Because the front door glass SUB-ASSY LH cannot be installed in a position other than the one in the figure, perform this task while sliding the front door frame SUB-ASSY RR LWR LH.
    (6) Set the grommet part of the front door glass SUB-ASSY LH into the rail of the front door frame SUB-ASSY RR LWR LH.
    CAUTION:
    - To avoid dropping the front door glass SUB-ASSY LH and the front door frame SUB-ASSY RR LWR LH, hold them securely.
    - Do not damage the front door glass.

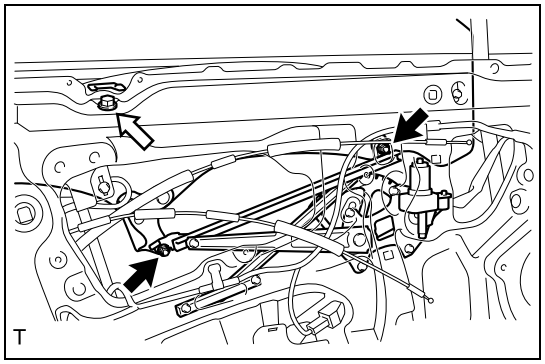

(7) Using 2 nuts, install the front door glass SUB-ASSY LH.
Standard value:T=7.5N·m {77kgf·cm} {5.5ft·lbf}

23. Installation of the door glass stabilizer INN
    (1) Install the door glass stabilizer INN with a bolt.
    Standard value:T=7.5N·m {77kgf·cm} {5.5ft·lbf}
24. Adjustment of the front door glass SUB-ASSY LH
    (1) Inspect the front door glass installation. (Refer to DH - 54)
    (2) Adjust the placement of the front door glass. (Refer to DH - 55)
25. Installation of the front door glass weather strip ASSY OUT LH (Refer to ET - 40)
26. Install the rear end of the front door weather strip LH, and install the front door rear cover LH.
27. Installation of the outer rear-view mirror LH (Refer to MX - 7)
28. Installation of the front door service hole cover LH

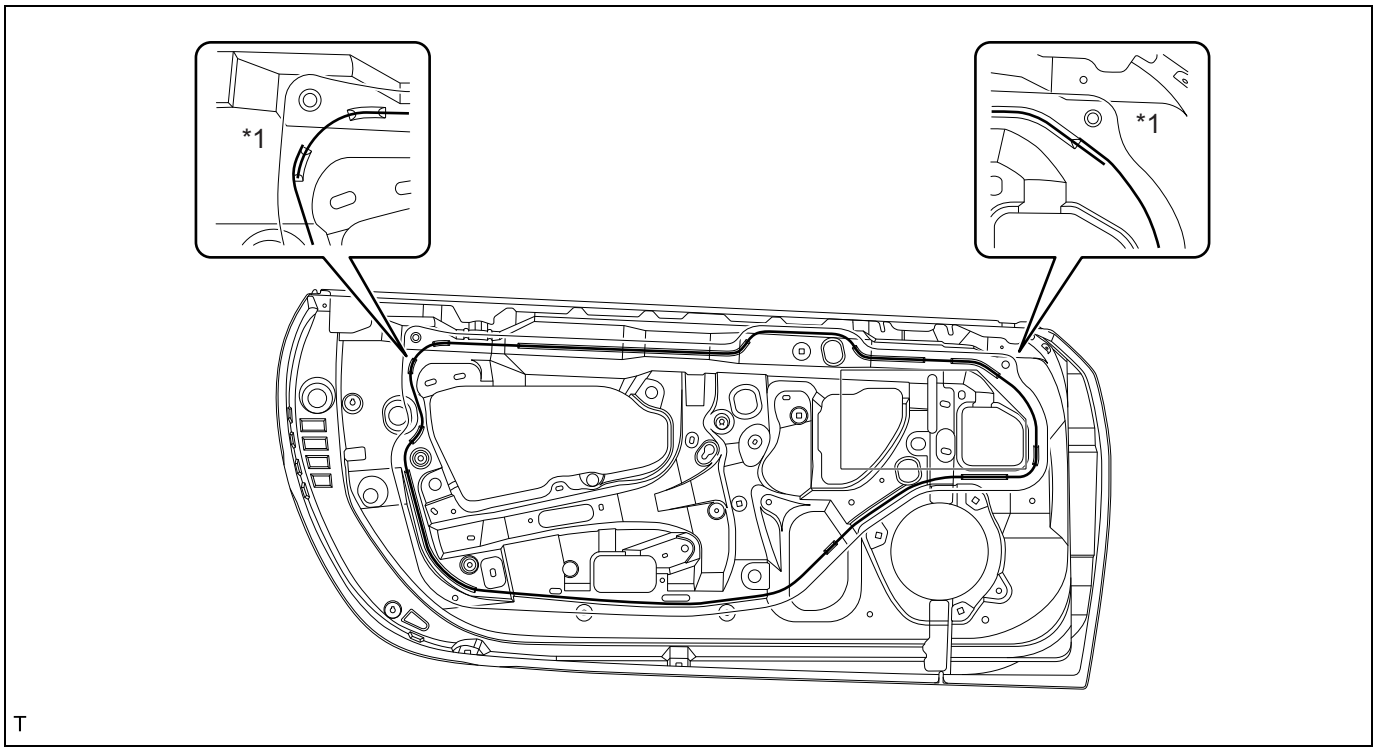

(1) Apply new butyl tape to the door panel.
CAUTION:
- The butyl tape must overlay for 20 cm {7.874 in} or more.
- The butyl tape must not block the water draining holes in the front door panel.

(2) Put the front door lock remote control cable LH, the rear door inside locking cable LH and every connector through the new front door service hole cover LH.
(3) Align the new front door service hole cover LH with the front door panel standard position, and apply.
CAUTION:
To avoid wrinkles and bubbles, push with enough force when applying the front door service hole cover LH.
(4) Connect each connector.

Captions in illustration

*1	Specified location	-	-

29. Installation of the speaker ASSY FR NO.1 (if there is a speaker) (Refer to AV - 18)

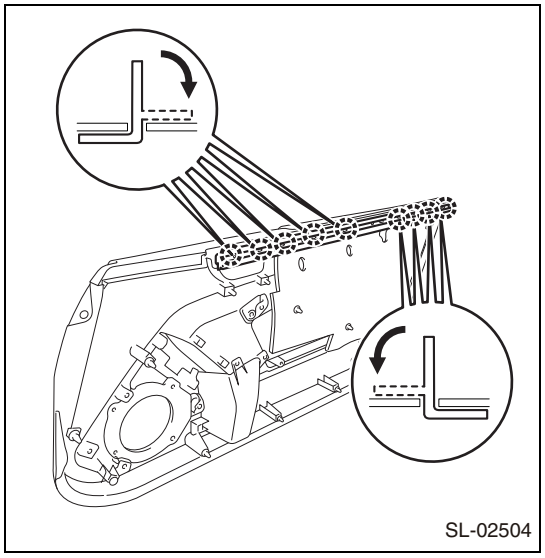
SL-02504

30. Installation of the front door glass weather strip INN LH.
    (1) As in the figure, fit in the 9 tabs and install the new front door glass weather strip INN LH on the front door trim board SUB-ASSY LH.
    (2) Fit in the tab.

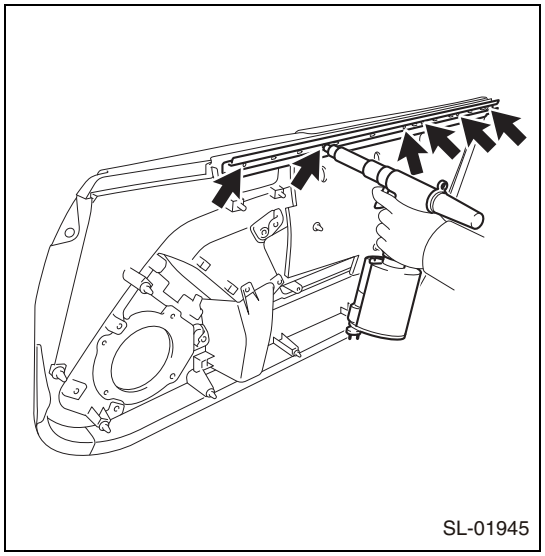
SL-01945

    (3) Attach nosepiece No.1 to the air riveter (a product that supports φ3.2 mm {0.13 in}), and insert the mandrel of the new rivet into the nosepiece.
    (4) Once the rivets have been vertically pushed into the installation holes, use the air riveter to install the 6 rivets.
    (5) If you can't cut the shaft, pull again to cut off the shaft, removing the head as well.
    Preparation tool & preparation items: Air riveter (product that supports φ3.2 mm {0.13 in})
    Rivet

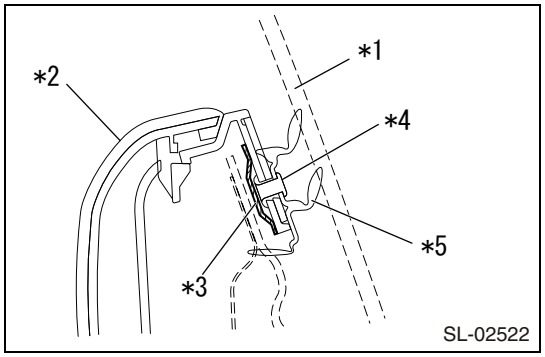

SL-02522

    (6) After installing the rivet, cut non-woven tape into a 15 mm×15 mm {0.59 in ×0.59 in} square and apply to the crimped section.
    CAUTION:
    The crimped section of the rivet should be 3 mm {0.12 in} high. It may interfere with the door panel. If the crimping is insufficient, push it down with pliers.
    Preparation items: Non-woven tape: 94029FG000

Captions in illustration

*1	Window glass
*2	Door trim
*3	Non-woven tape
*4	Rivet
*5	Weather strip INN

    (7) After installing the weather strip INN, perform the following inspections.
    - There is no gap between the weather strip INN LH and the front door trim board SUB-ASSY LH.
    - There is no looseness when you lightly pull on the weather strip INN LH.

DH

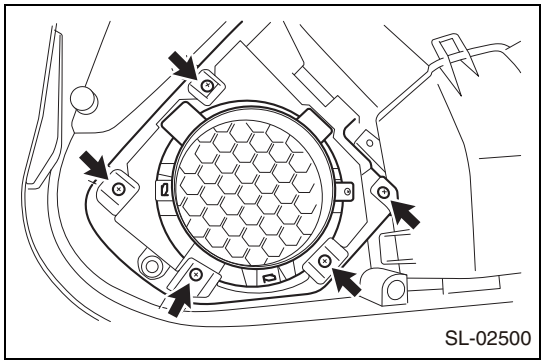

31. Installation of the front door trim pad LWR LH (2-speaker type)
    (1) Using 5 screws, install the front door trim pad LWR LH.

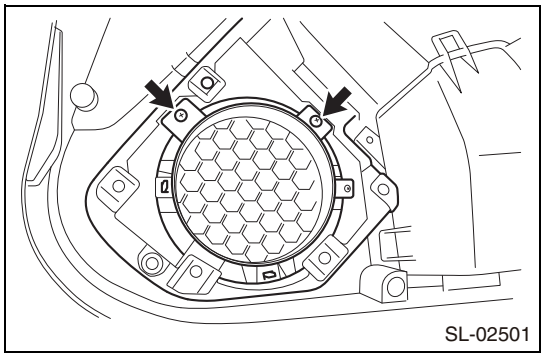

32. Installation of the front door speaker LH (6-speaker type)
    (1) Install the front door speaker grill LH on the front door speaker LH.
    (2) Using 2 screws, install the front door speaker LH.

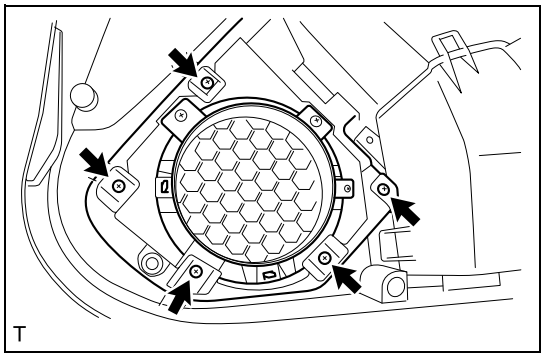

33. Installation of the front door trim pad LWR LH (6-speaker type)
    (1) Using 5 screws, install the front door trim pad LWR LH.

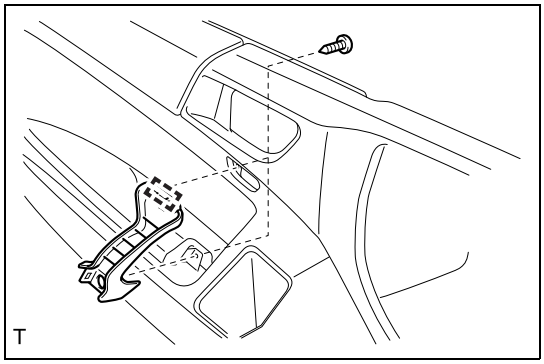

34. Installation of the door assist grip ASSY LH
    (1) Fit in the guide, and with 2 screws, install the door assist grip ASSY LH.

35. Installation of the outer mirror switch ASSY (Refer to MX - 14)

36. Installation of the power window regulator master switch ASSY (driver side door) (Refer to WS - 53)

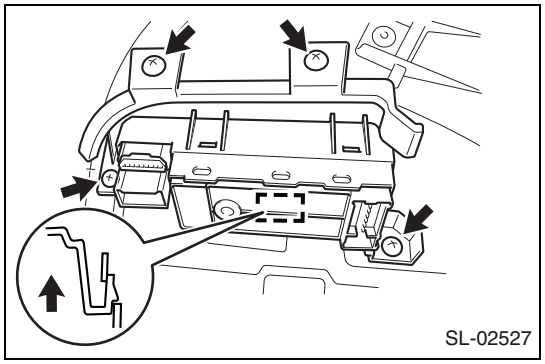

37. Installation of the power window regulator master switch ASSY W/ front armrest base panel UPR LH (driver side door)
    (1) Fit in the tab, and using 4 screws, install the power window regulator master switch ASSY W/ front armrest base panel UPR LH on the front door trim board SUB-ASSY LH.

38. Installation of power window regulator switch ASSY (passenger side door) (Refer to WS - 55)

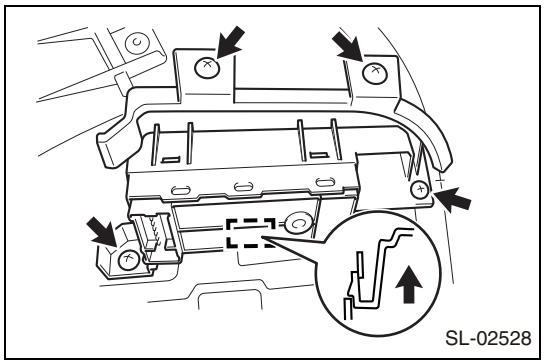

39. Installation of the power window regulator switch ASSY W/ front armrest base panel UPR RH (passenger side door)
    (1) Fit in the tab, and using 4 screws, install the power window regulator switch ASSY W/ front armrest base panel UPR RH on the front door trim board SUB-ASSY RH.

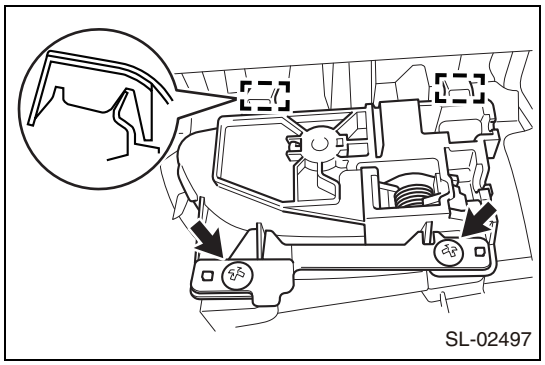

40. Installation of the front door inside handle SUB-ASSY LH
    (1) Fit in the 2 guides.
    (2) Using 2 screws, install the front door inside handle SUB-ASSY LH with the plate on the front door trim board SUB-ASSY LH.

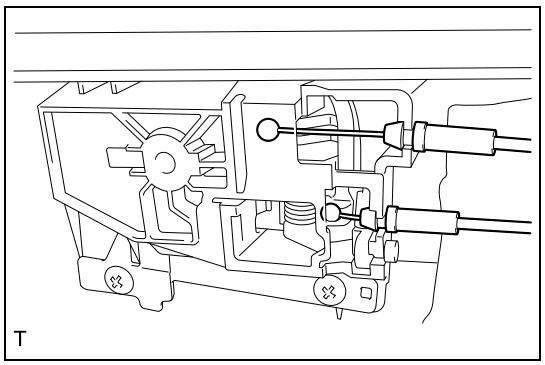

41. Installation of the front door trim board SUB-ASSY LH
    (1) Connect the front door lock remote control cable LH and the front door inside locking cable LH to the door remote ASSY LH.

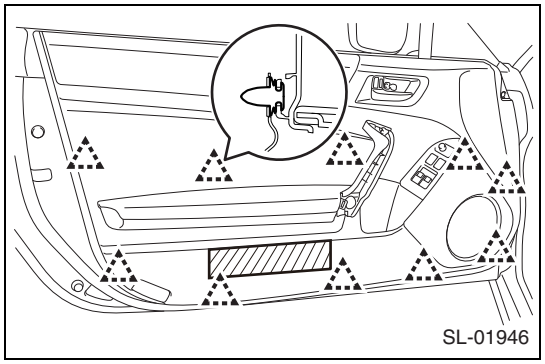

(2) Connect each connector.
(3) Insert the upper side of the front door trim board SUB-ASSY LH first.
(4) Fit in the 10 clips and install the front door trim board SUB-ASSY LH on the front door panel.
CAUTION:
When installing the front door panel, do not hit the shaded area.

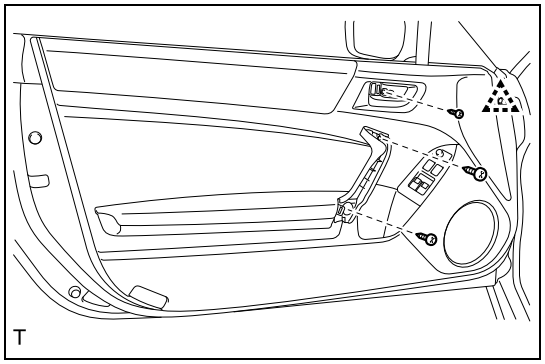

(5) Install the 3 screws and a clip.

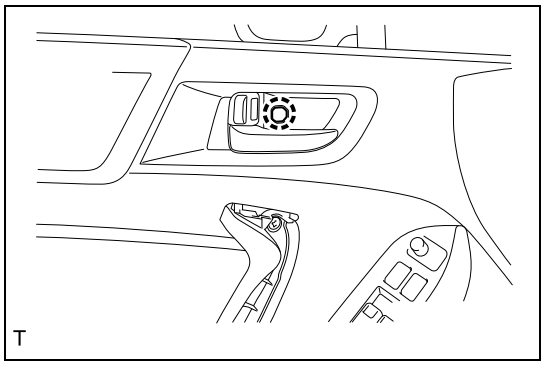

(6) Fit in the tab and install the cap.

42. Installation of the courtesy light ASSY (Refer to LI - 56)

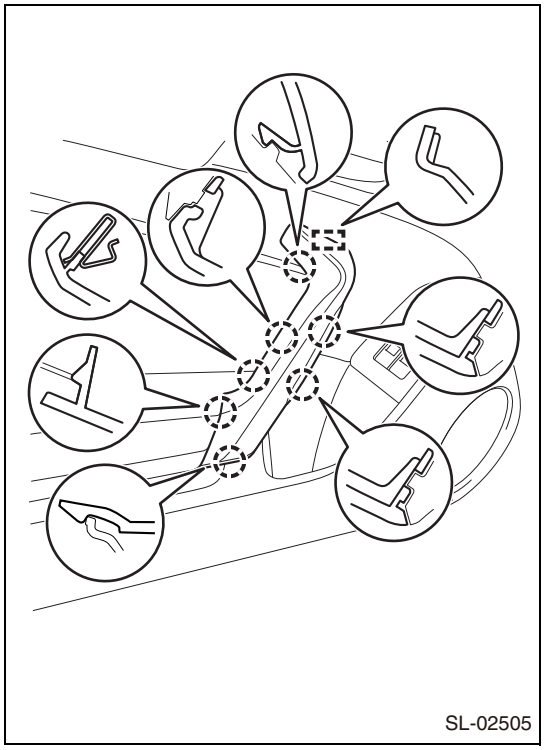

43. Installation of the door armrest cover LH
    (1) Fit in the 7 tabs and the guide, and install the door armrest cover LH.

44. Connection of the battery ground terminal
    Standard value:T=6.0N·m {61kgf·cm} {4.4ft·lbf}
45. Power window registration settings (Refer to WS - 5)
46. Function inspection of the power windows (Refer to WS - 59)

Adjustment

NOTE:

The following procedure is for LH side. Perform the same procedures for the RH and LH side.

1. Inspection of the front door LH
    (1) Inspect if each placement dimension is within the reference values.

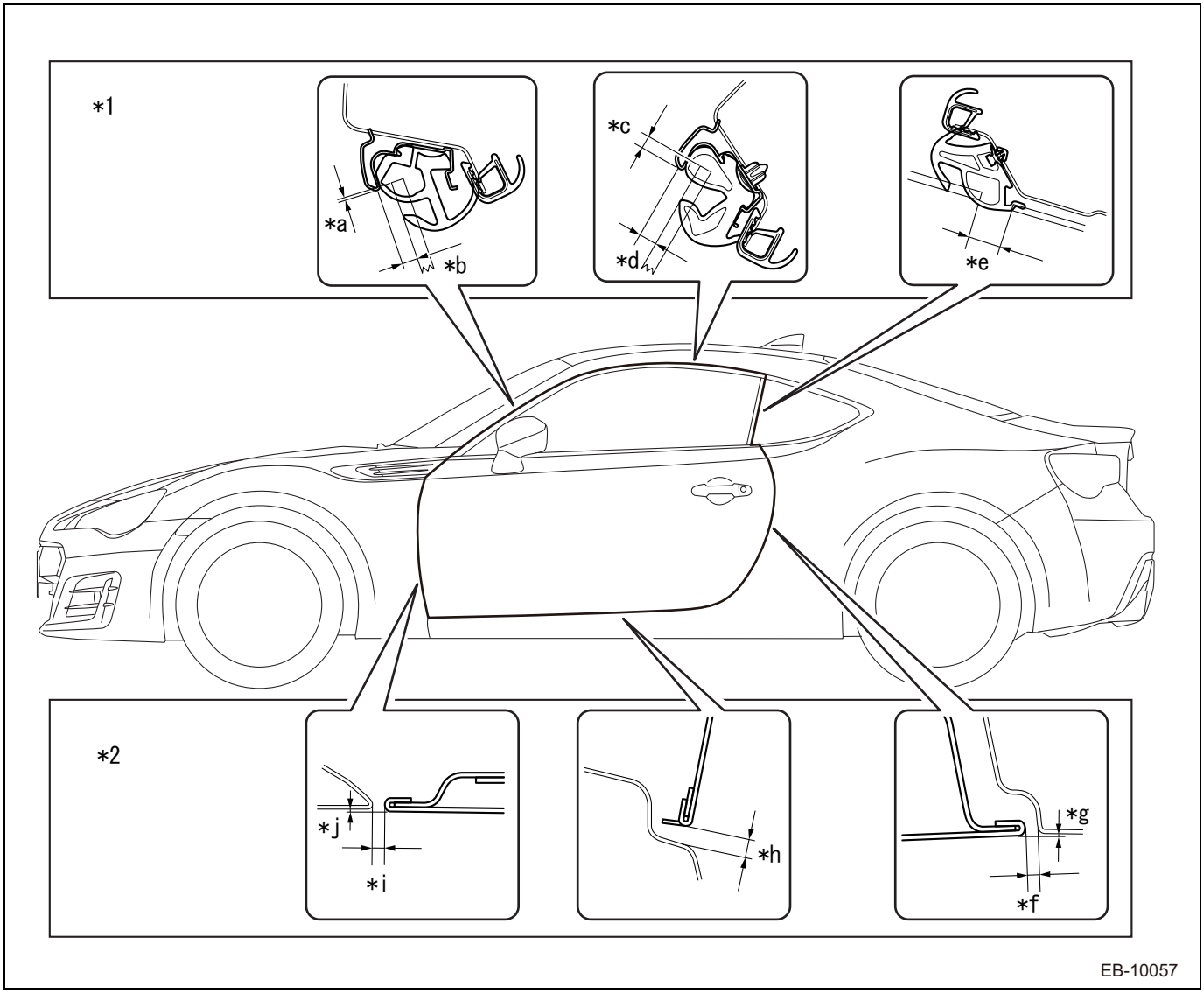

Captions in illustration

*1	Front glass	*2	Front door

Reference values

*a	-1.0 to 2.0 mm {-0.039 to 0.079 in}	*b	5.5 to 8.5 mm {0.217 to 0.335 in}
*c	3.5 to 6.5 mm {0.138 to 0.256 in}	*d	5.2 to 8.2 mm {0.205 to 0.323 in}
*e	13.5 to 16.5 mm {0.5315 to 0.6496 in}	*f	2.5 to 5.5 mm {0.0984 to 0.2165 in}
*g	0.0 to 1.5 mm {0.0 to 0.0591 in}	*h	4.8 to 7.8 mm {0.1890 to 0.3071 in}
*i	3.1 to 5.6 mm {0.122 to 0.220 in}	*j	-1.0 to 1.5 mm {-0.0394 to 0.0591 in}

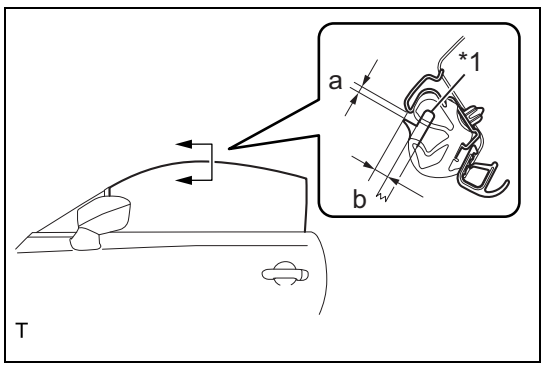

2. Adjustment of the front door glass
   (1) Insert the SST in the front door glass and measure the placement dimensions.
   SST 61299CA000

Captions in illustration

*1	SST

Reference values

*a	3.5 to 6.5 mm {0.138 to 0.256 in}
*b	5.2 to 8.2 mm {0.205 to 0.323 in}

   (2) Adjust the front door glass so that the placement dimensions are within the reference values.

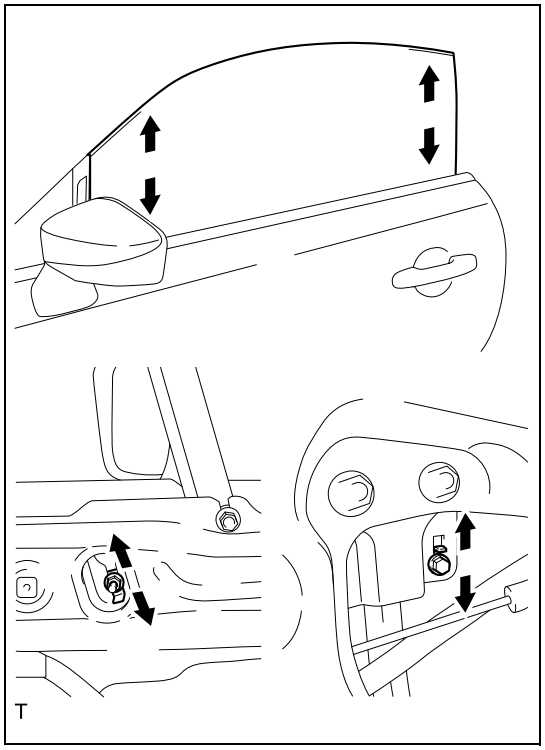

(3) Loosen the nut of the front door sash stopper and the bolt of the front door frame SUB-ASSY RR LWR RH stopper section, and adjust the vertical direction of the front door glass.
Standard value:T=7.5N·m {77kgf·cm} {5.5ft·lbf}

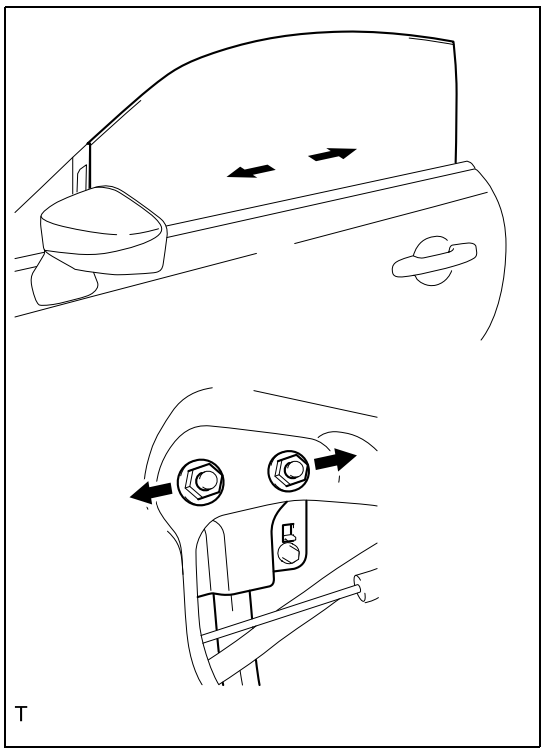

(4) Loosen the 2 nuts of the front door frame SUB-ASSY RR LWR RH, and adjust the forward and backward direction of the front door glass.
Standard value:T=14N·m {143kgf·cm} {10.3ft·lbf}

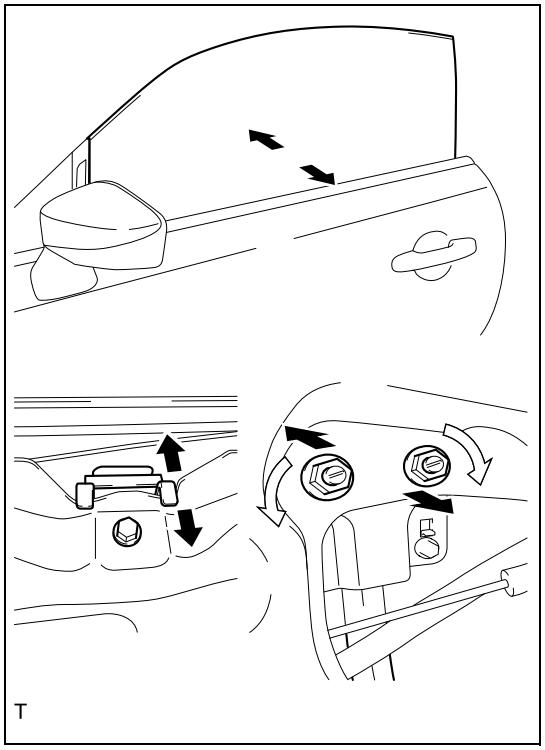

(5) Loosen the bolt of the door glass stabilizer INN, and adjust the side to side direction of the front door glass.
Standard value:T=7.5N·m {77kgf·cm} {5.5ft·lbf}

(6) Loosen the nut of the front door frame SUB-ASSY RR LWR RH, turn the bolt with a flat tip screwdriver, and adjust the side to side direction of the front door glass.
Standard value:T=14N·m {143kgf·cm} {10.3ft·lbf}

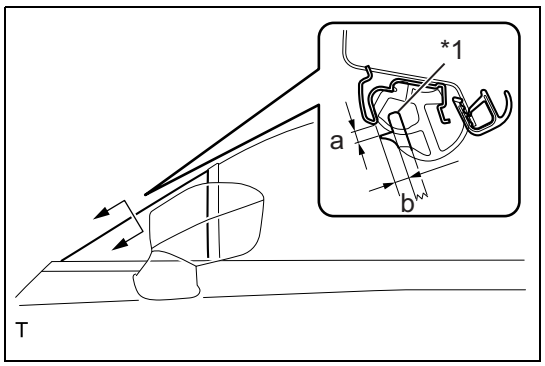

(7) Insert the SST in the side fix window and measure the placement dimensions.
SST 61299CA010

Captions in illustration

*1	SST

Reference values

*a	2.5 to 5.5 mm {0.0984 to 0.2165 in}
*b	5.2 to 8.2 mm {0.2047 to 0.3228 in}

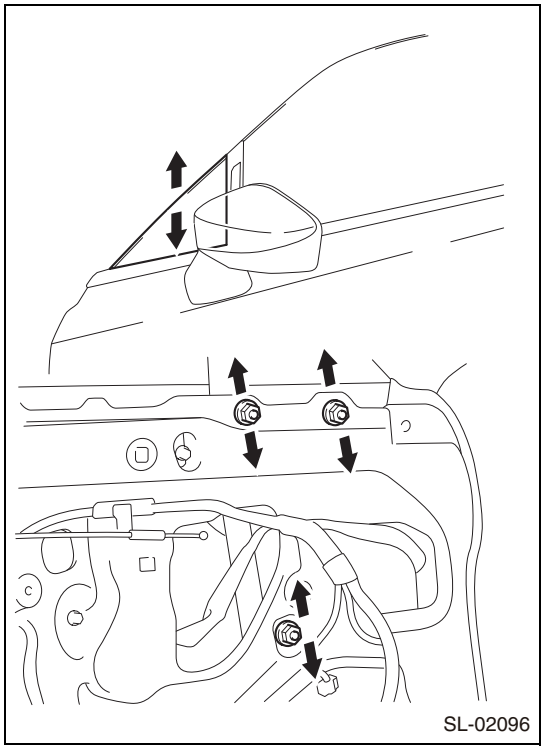

(8) Loosen the 3 nuts of the front door sash and adjust the vertical direction of the front door sash so that the placement dimensions are within the reference values.
Standard value:T=14N·m {143kgf·cm} {10.3ft·lbf} (lower side)
T=7.5N·m {77kgf·cm} {5.5ft·lbf} (upper side)

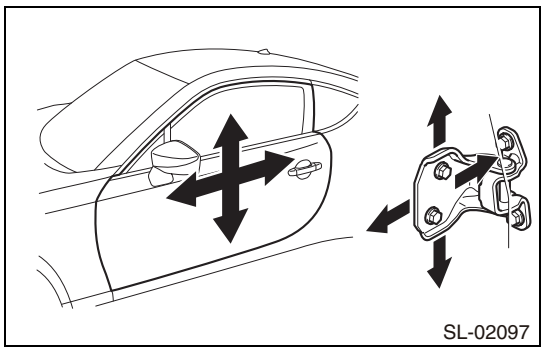

3. Adjustment of the front door LH
(1) Turn the steering wheel fully to the left to turn over the rear end of the mud guard.
(2) Loosen the bolts on the body side, and adjust the door's front and rear, and vertical directions.
Standard value:T=30N·m {306kgf·cm} {22.1ft·lbf}

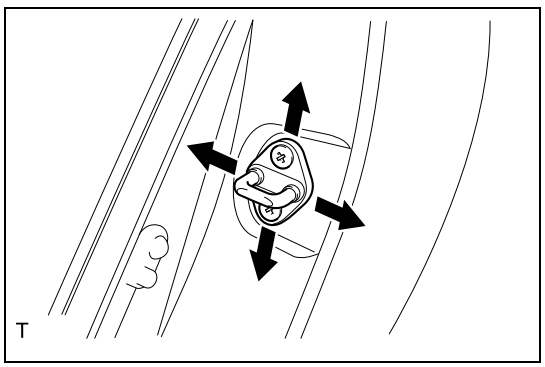

(3) Loosen the striker installation screws until the striker can move. Using a brass bar, hit the striker lightly and adjust the side to side and vertical directions of the rear end of the door and the front door lock striker plate ASSY.
Standard value:T=18N·m {184kgf·cm} {13.3ft·lbf}

Trunk panel

Exploded view

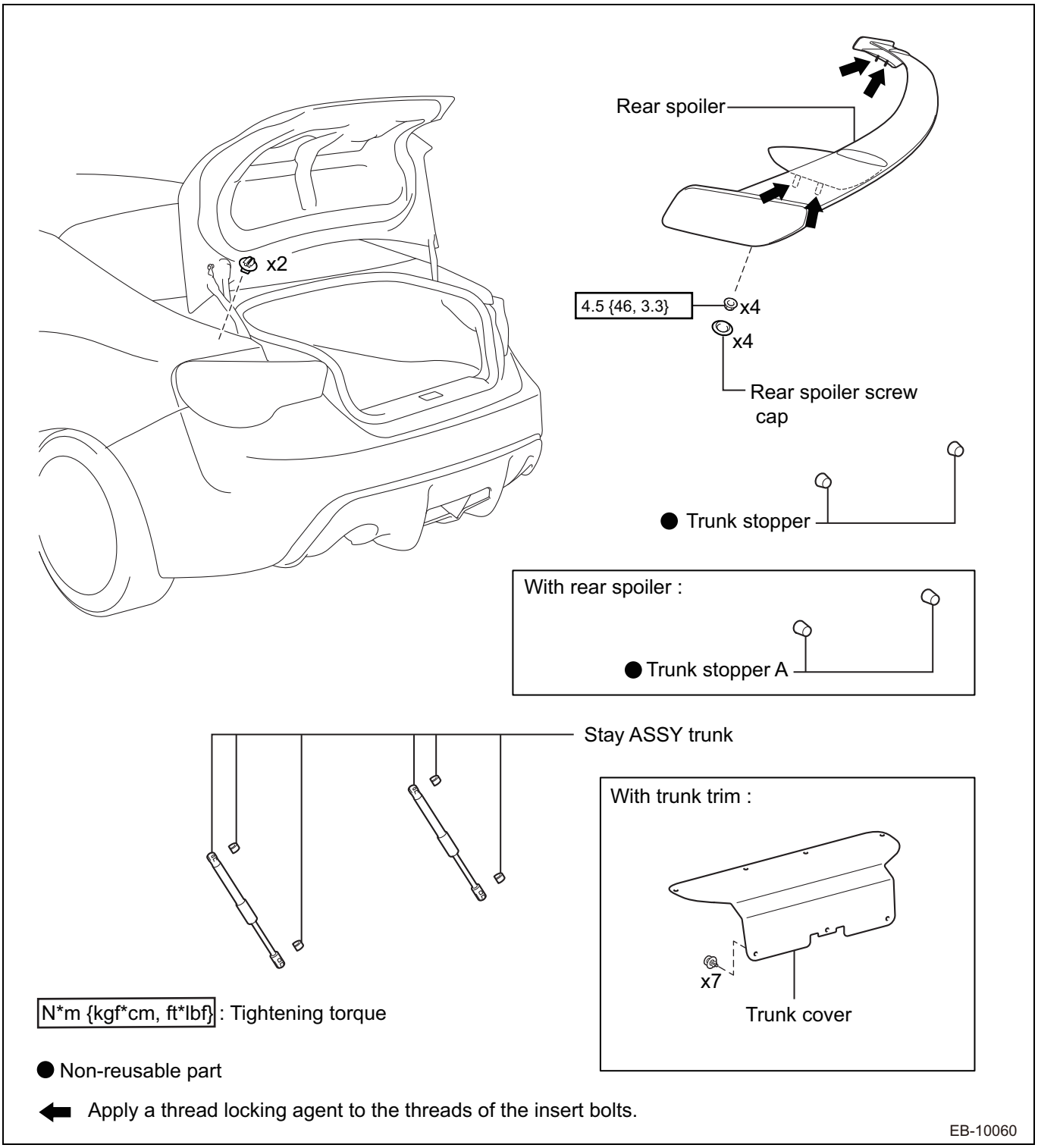

DH

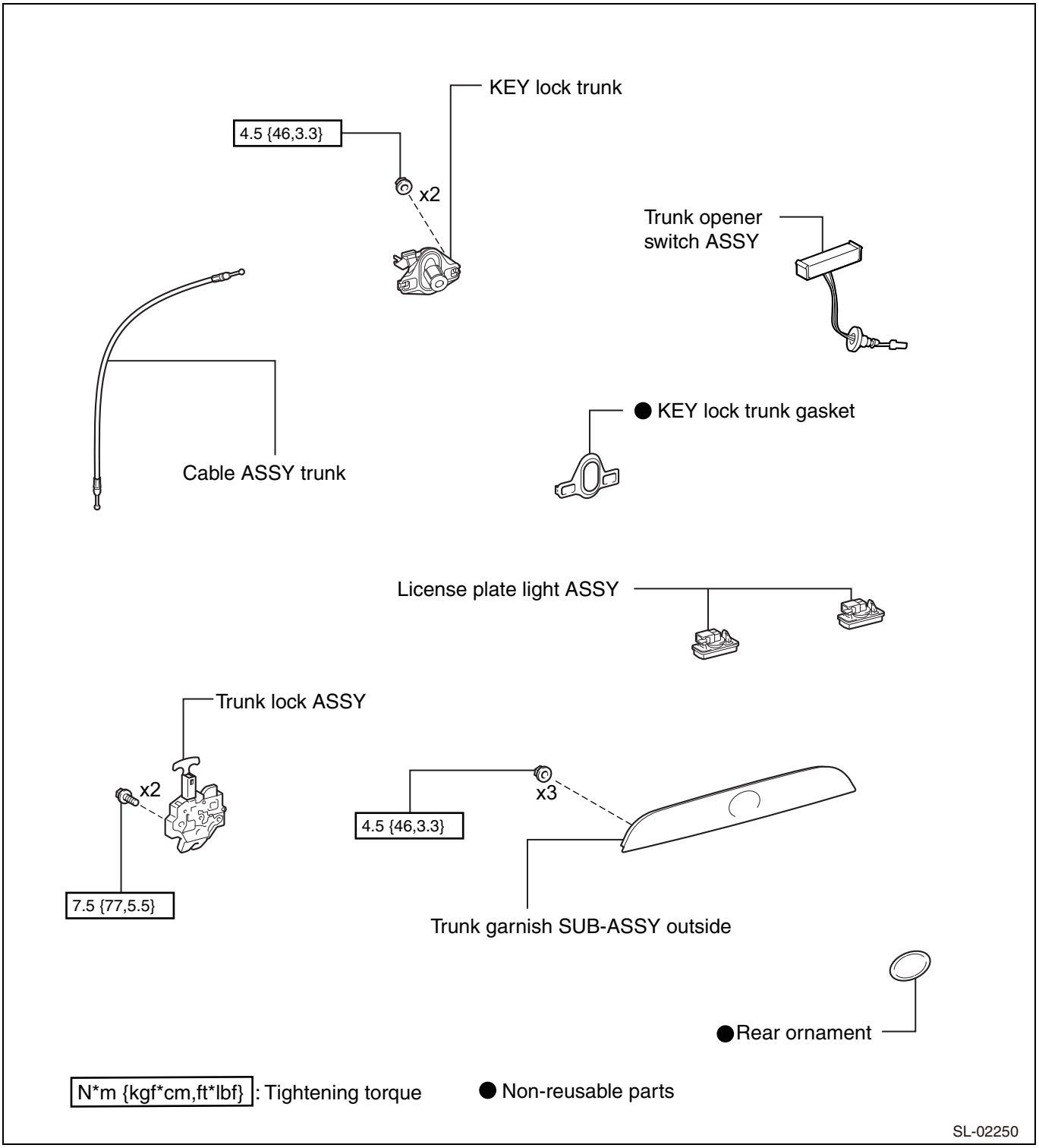
KEY lock trunk
4.5 {46,3.3}
x2
Trunk opener switch ASSY
Cable ASSY trunk
● KEY lock trunk gasket
License plate light ASSY
Trunk lock ASSY
x2
7.5 {77,5.5}
x3
4.5 {46,3.3}
Trunk garnish SUB-ASSY outside
●Rear ornament
N*m {kgf*cm,ft*lbf}: Tightening torque
● Non-reusable parts
SL-02250

DH

Disassembly

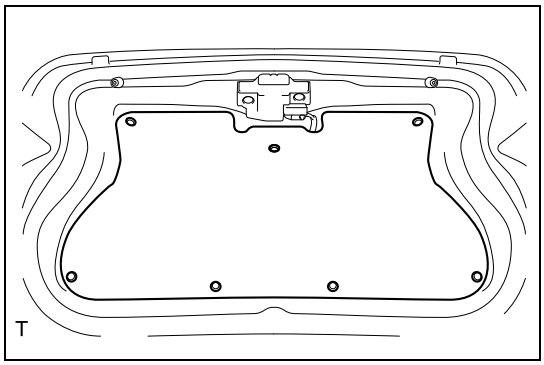

1. Removal of the trunk cover
   (1) Using a clip remover, remove the 7 clips and remove the trunk cover.

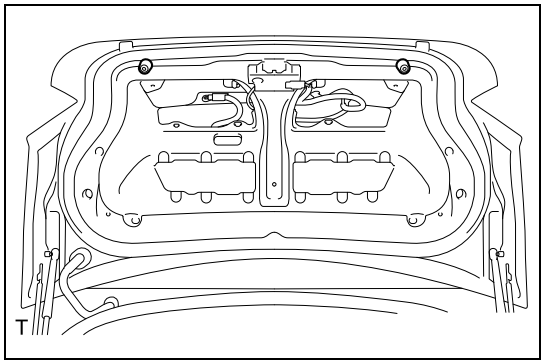

2. Removal of the trunk stoppers
   (1) Release the 2 tabs and remove the 2 trunk stoppers.

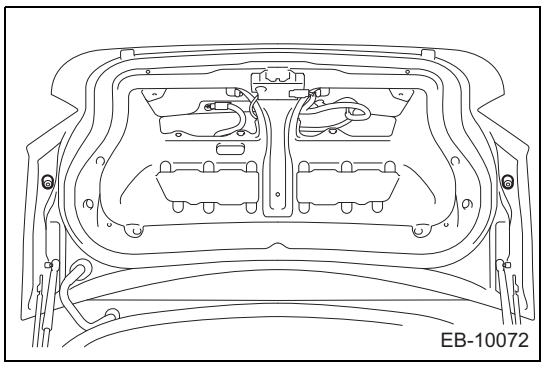

3. Removal of the trunk stopper A (if there is a rear spoiler)
   (1) Release the 2 tabs and remove the 2 trunk stoppers A.

4. Removal of key lock trunk (Refer to DL - 106)
5. Removal of the trunk lock ASSY (Refer to DL - 106)
6. Removal of the cable ASSY trunk (Refer to DL - 107)
7. Removal of the trunk garnish SUB-ASSY outside (Refer to ET - 52)
8. Removal of the trunk opener switch ASSY (Refer to DH - 71)
9. Removal of the rear ornament emblem (installed on the rear) (Refer to ET - 39)
10. Removal of the license plate light ASSY (installed on the LH side) (Refer to LE - 69)
11. Removal of the license plate light ASSY (installed on the RH side)
    NOTE:
    Remove the part in the same manner as LH side.
12. Removal of the rear spoiler (if there is a rear spoiler) (Refer to ET - 33)
13. Removal of the stay ASSY trunk (Refer to DH - 65)

Assembly

1. Installation of the stay ASSY trunk (Refer to DH - 66)
2. Installation of the rear spoiler (if there is a rear spoiler) (Refer to ET - 34)
3. Installation of the license plate light ASSY (installed on the LH side) (Refer to LE - 69)

4. Installation of the license plate light ASSY (installed on the RH side)
   NOTE:
   Install the part in the same manner as LH side.
5. Installation of the rear ornament emblem (installed on the rear) (Refer to ET - 40)
6. Installation of the trunk opener switch ASSY (Refer to DH - 71)
7. Installation of the trunk garnish SUB-ASSY outside (Refer to ET - 52)
8. Installation of the cable ASSY trunk (Refer to DL - 107)
9. Installation of the trunk lock ASSY (Refer to DL - 107)
10. Installation of key lock trunk (Refer to DL - 107)

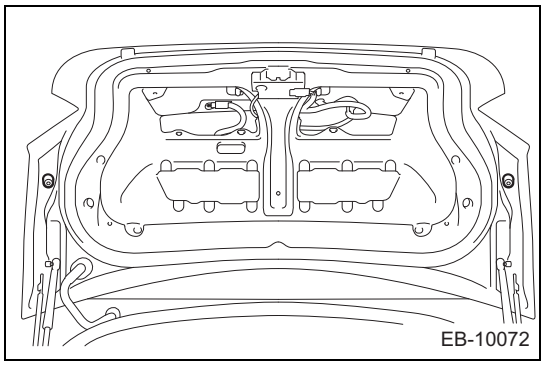

11. Installation of the trunk stopper A (if there is a rear spoiler)
    (1) Fit in the 2 tabs and install the 2 new trunk stoppers A.

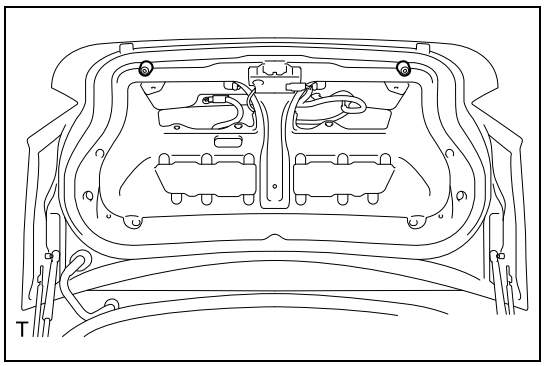

12. Installation of the trunk stoppers
    (1) Fit in the 2 tabs and install the 2 new trunk stoppers.

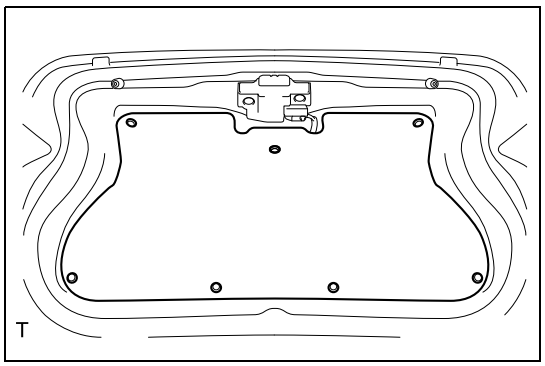

13. Installation of the trunk cover
    (1) Using 7 clips, install the trunk cover.

DH

Adjustment

1. Inspection of the hinge ASSY trunk
   (1) Inspect if placement dimensions are within the reference values.

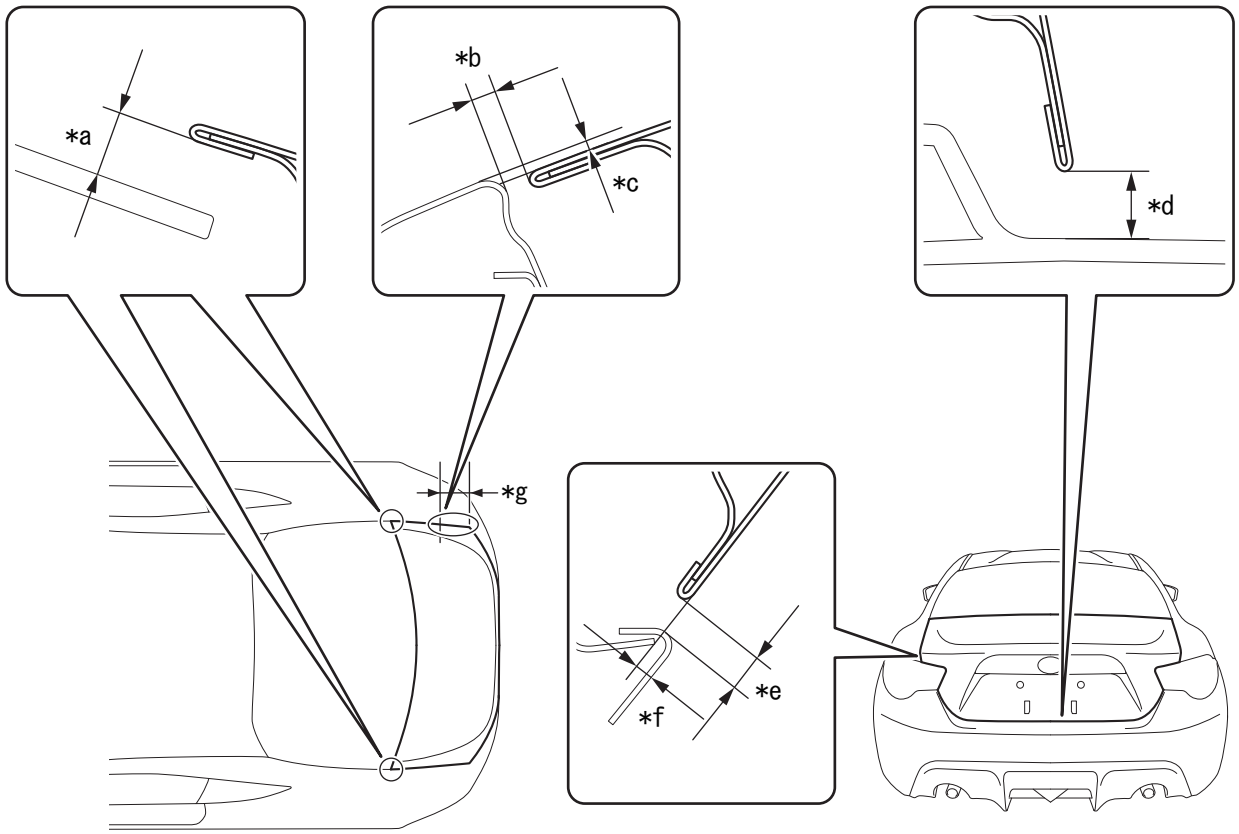

EI-03882

Reference values

*a	7.8 mm {0.3071 in}	*b	2.0 to 5.0 mm {0.0787 to 0.1969 in}
*c	-2.0 to 1.0mm {-0.0787 to 0.0394in}	*d	5.8 to 10.2 mm {0.2283 to 0.4016 in}
*e	4.3 to 7.3 mm {0.1693 to 0.2874 in}	*f	-2.0 to 1.0 mm {-0.0787 to 0.0394 in}
*g	150 mm {5.906 in}	—	—

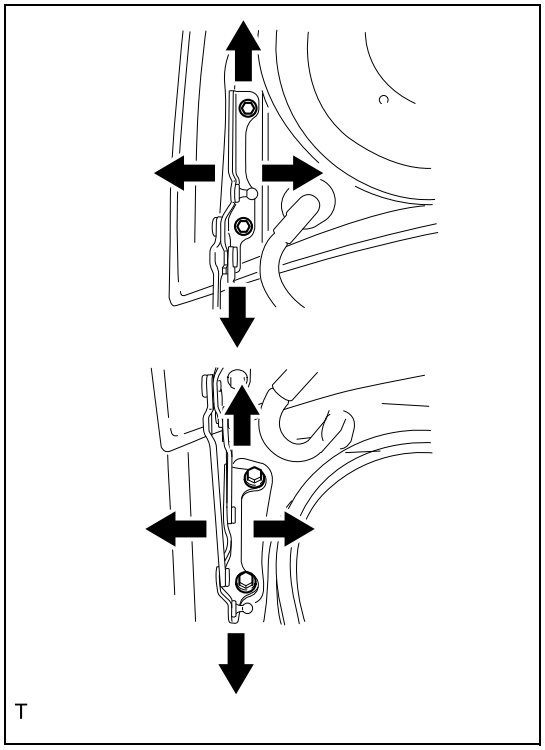

2. Adjustment of the hinge ASSY trunk
   (1) Loosen the bolts before adjusting the door's forward and backward direction, and the side to side direction of the door's front end.
   Standard value:T=18N·m {184kgf·cm} {13.3ft·lbf}

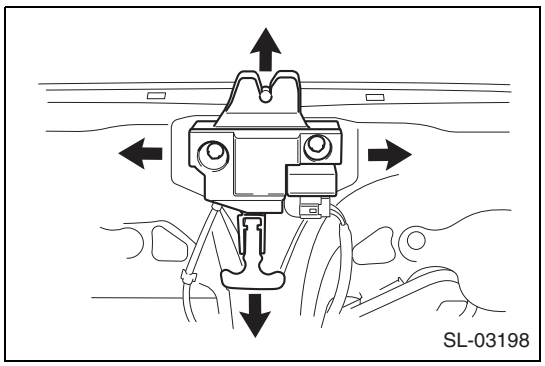

   (2) Loosen the bolts before adjusting the side to side direction of the door's rear end and the striker.
   Standard value:T=7.5N·m {77kgf·cm} {5.5ft·lbf}

Stay ASSY trunk

Exploded view

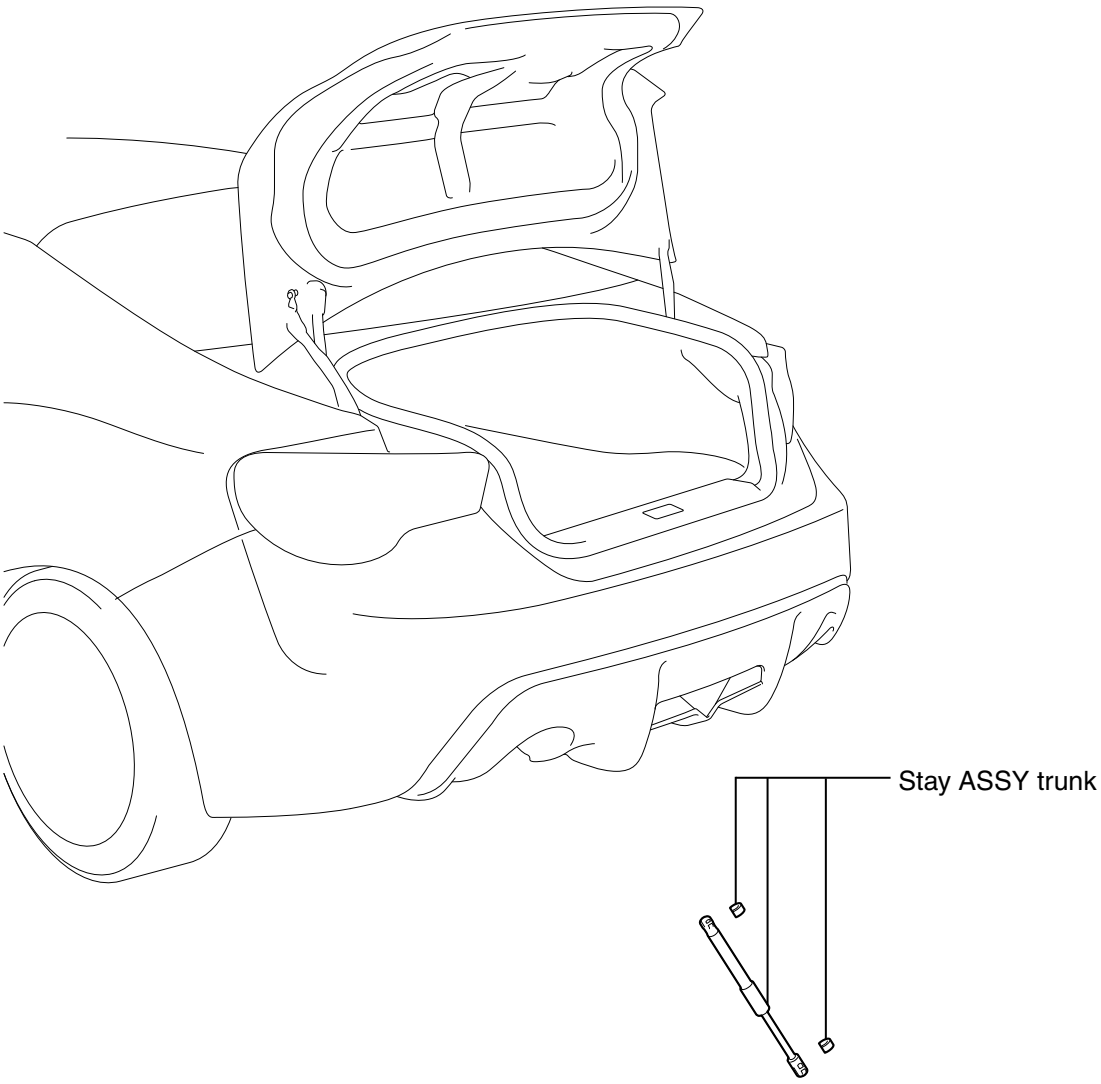

SL-02079

Removal

NOTE:

The following procedure is for LH side. Perform the same procedures for the RH and LH side.

1. Removal of stay ASSY trunk

   CAUTION:

   - During installation or removal, hold the cylinder part. To prevent foreign objects from becoming attached, do not touch the stroking section of the rod.
   - If you are wearing cotton gloves and touch the rod section, the fibers may become attached and cause gas leaks. Do not touch the rod.
   - To avoid disfiguration in the rod, do not put a lateral load on the cylinder.

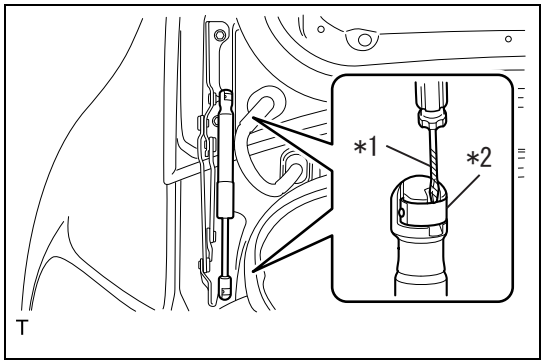

(1) Using a thin flat tip screwdriver that is wrapped in protective tape, remove the 2 stop rings along the side.

Captions in illustration

*1	Protective tape
*2	Stop ring

(2) Release the ball joint section and remove the stay ASSY trunk.
CAUTION:
Hold the trunk so that it can't fall, and remove the stay ASSY trunk.

Installation

NOTE:

The following procedure is for LH side. Perform the same procedures for the RH and LH side.

1. Installation of the stay ASSY trunk
CAUTION:
- During installation or removal, hold the cylinder part. To prevent foreign objects from becoming attached, do not touch the stroking section of the rod.
- If you are wearing cotton gloves and touch the rod section, the fibers may become attached and cause gas leaks. Do not touch the rod.
- To avoid disfiguration in the rod, do not put a lateral load on the cylinder.
- Hold the joint section and check the installation condition.

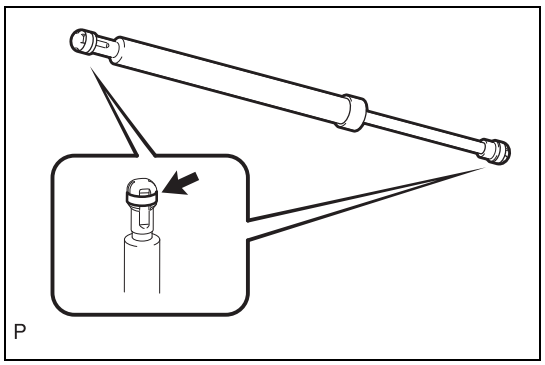

(1) If you are reusing the stay ASSY trunk:
(a)Install the 2 stop rings on the stay ASSY trunk.

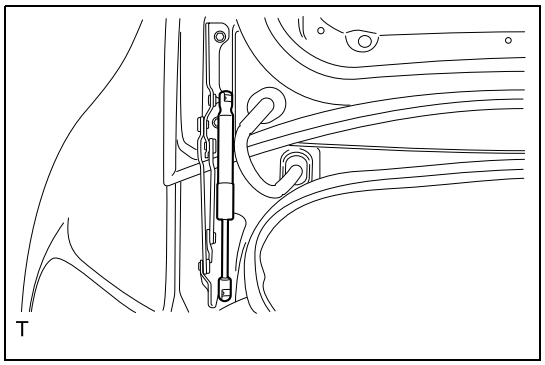

(2) Fit the stay ASSY trunk into the ball joint section to install it.
CAUTION:
- Hold the trunk so that it can't fall, and install the stay ASSY trunk.
- Fit the stay ASSY trunk into the ball joint section, and check that it can't come out.

Disposal

1. Disposal of the stay ASSY trunk
(1) With the piston rod fully extended, secure the stay ASSY trunk in a vice bench.

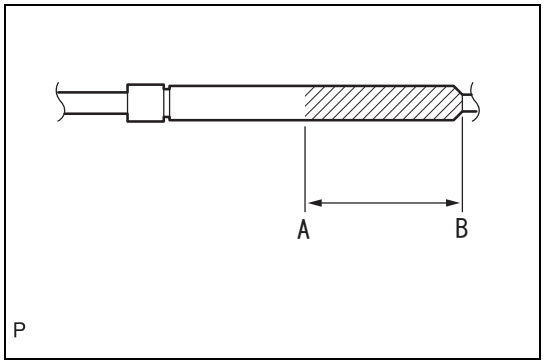

(2) Using a metal saw, cut between A and B in the figure, and release the gas.

Range	Length
A-B	80mm {3.15 in}

CAUTION:
- Wear protective goggles when performing this task.
- The stored gas is colorless, odorless, and harmless. However, the powder from the saw may come flying, so cover it with a cloth.

Trunk opening switch ASSY

Exploded view

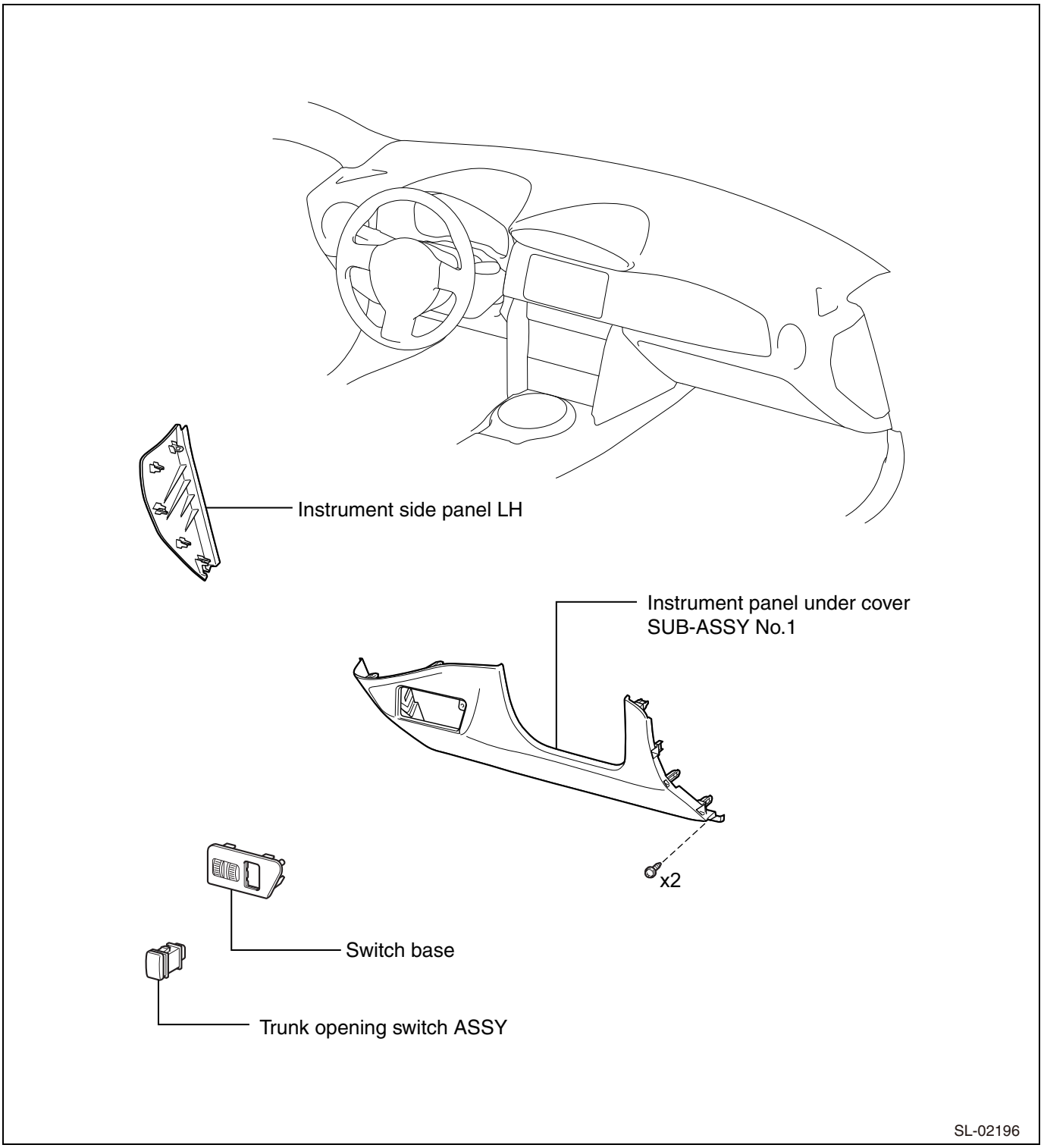

Removal

1. Removal of the instrument side panel LH (Refer to IT - 24)
2. Removal of the instrument panel under cover SUB-ASSY No. 1 (Refer to ME - 68)

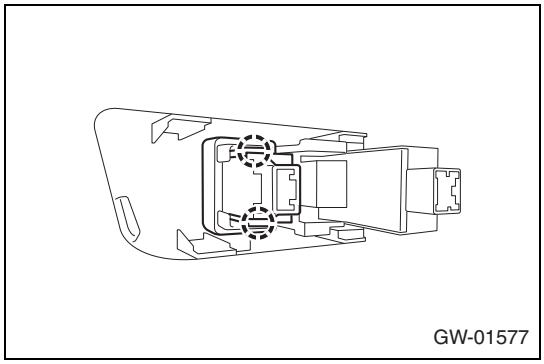
GW-01577

3. Removal of the trunk opening switch ASSY
   (1) Release the 2 tabs and remove the trunk opening switch ASSY.

Installation

1. Installation of the trunk opening switch ASSY
   (1) Fit in the 2 tabs and install the trunk opening switch ASSY.
2. Installation of the instrument panel under cover SUB-ASSY No.1 (Refer to ME - 69)
3. Installation of the instrument side panel LH (Refer to IT - 29)

Unit inspection

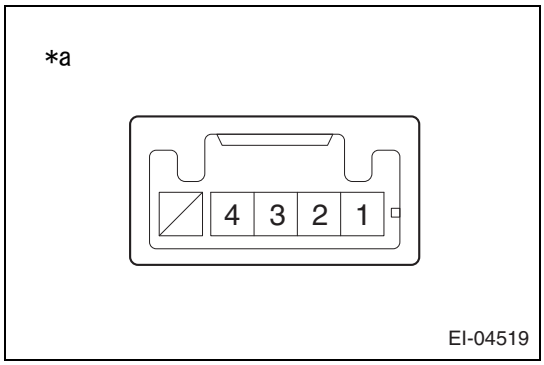

EI-04519

1. Inspection of the trunk opening switch ASSY
   (1) Inspection of the trunk opening switch ASSY
      (a)Check the resistance between the connector terminals.
      Resistance

Inspection terminals	Inspection conditions	Standard value
4 - 1	When the switch is not in use (OFF)	10 kΩ or more
4 - 1	When the switch is in use (ON)	Less than 1 Ω

Captions in illustration

*a	Connector not connected (Trunk opening switch ASSY)

Trunk electrical key switch

Exploded view

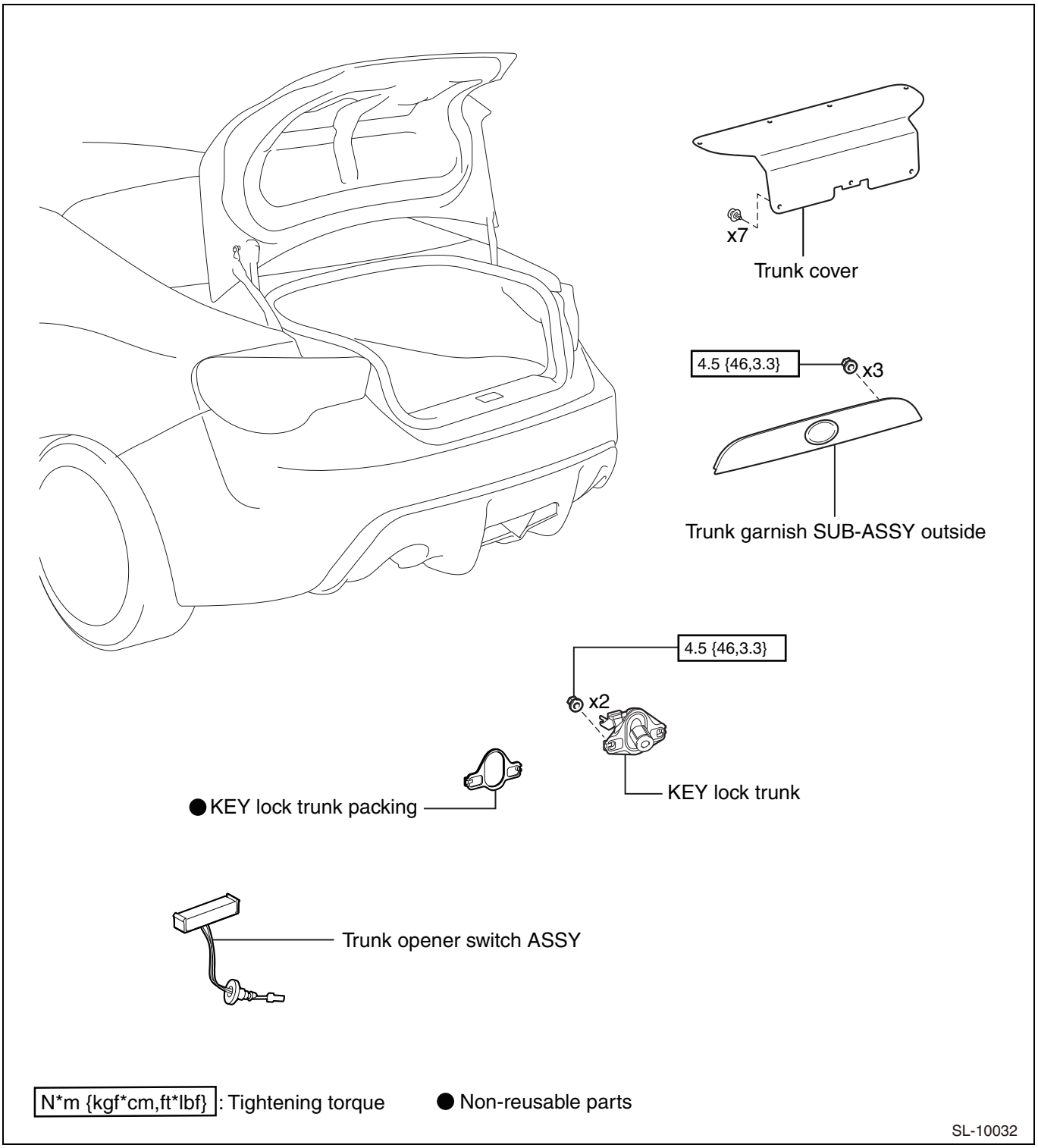

Removal

1. Removal of the trunk cover (Refer to DH - 61)
2. Removal of key lock trunk (Refer to DL - 106)
3. Removal of the trunk garnish SUB-ASSY outside (Refer to ET - 52)

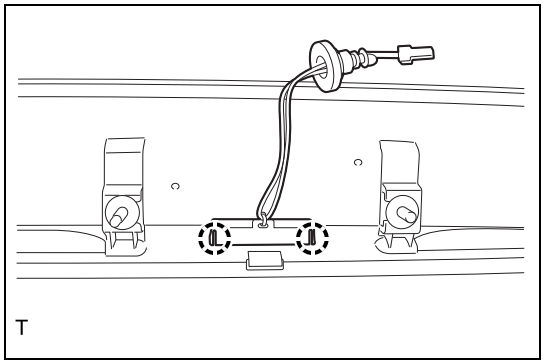

4. Removal of the trunk opener switch ASSY
   (1) Release the 2 tabs and remove the trunk opener switch ASSY.

Installation

1. Installation of the trunk opener switch ASSY
   (1) Fit in the 2 tabs and install the trunk opener switch ASSY.
2. Installation of the trunk garnish SUB-ASSY outside (Refer to ET - 52)
3. Installation of key lock trunk (Refer to DL - 107)
4. Installation of the trunk cover (Refer to DH - 62)

Unit inspection

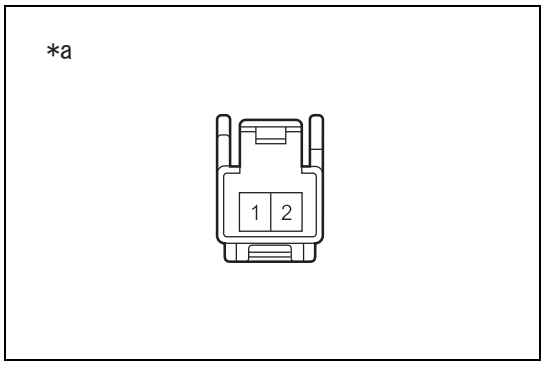

1. Inspection of the trunk opener switch ASSY
   (1) Inspection of the trunk opener switch ASSY
      (a)Measure the resistance between the terminals.
      Resistance

Inspection terminals	Inspection conditions	Standard value
2 - 1	When the switch is not in use (OFF)	10 kΩ or more
2 - 1	When the switch is in use (ON)	Less than 1 Ω

Captions in illustration

*a	Connector not connected (Trunk opener switch ASSY)

DH

Trunk opener main switch

Exploded view

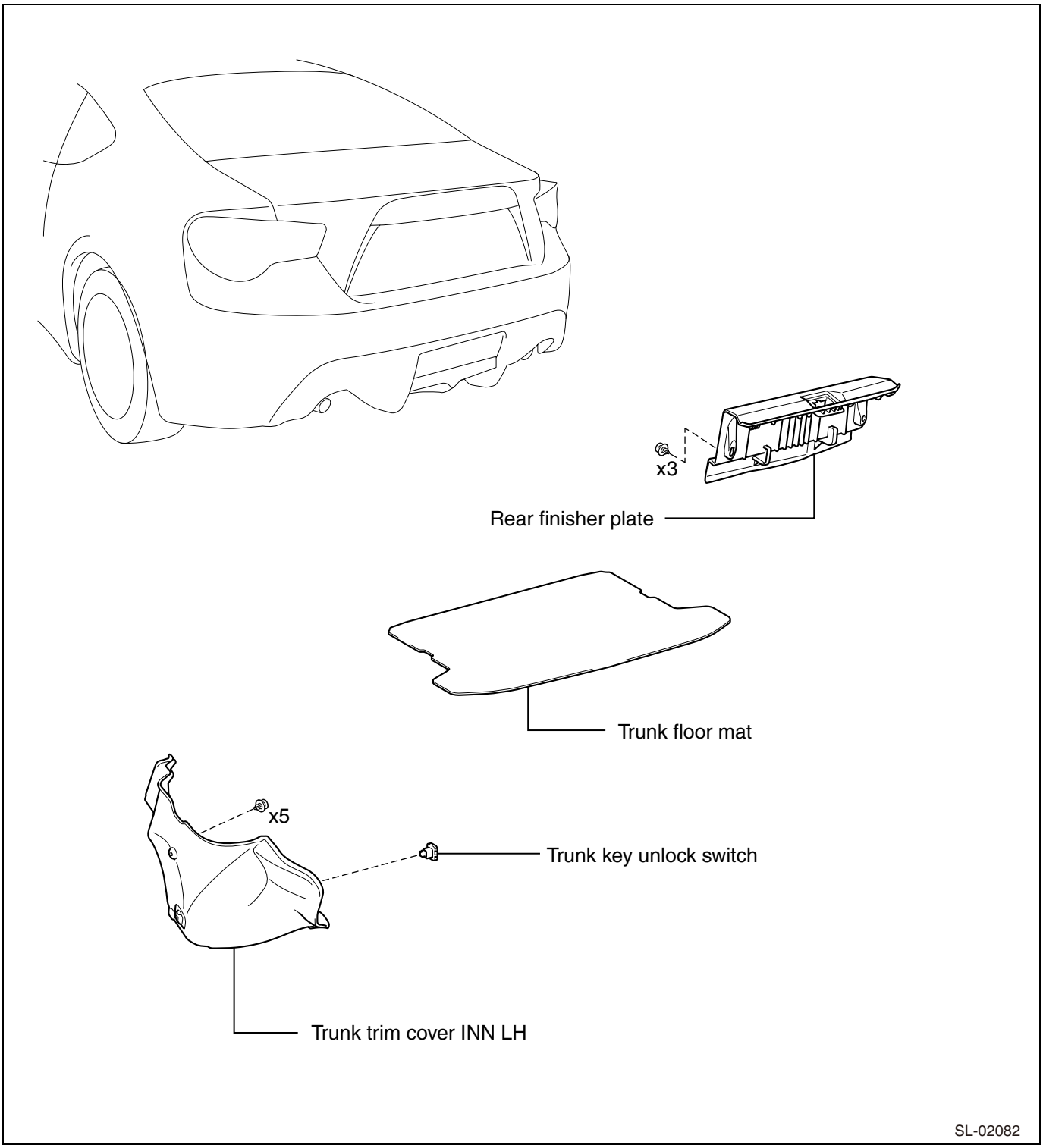

Removal

1. Removal of the trunk floor mat
2. Removal of the rear floor finish plate (Refer to LE - 61)

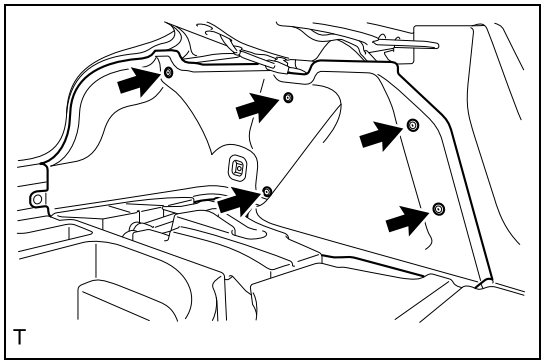

3. Removal of the trunk trim cover INN LH
   (1) Remove the 5 clips.

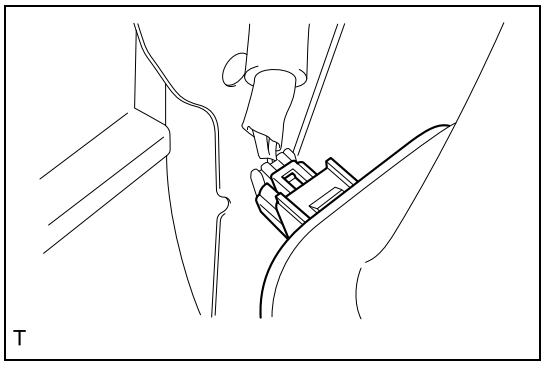

   (2) Disconnect the connector and remove the trunk trim cover INN LH.

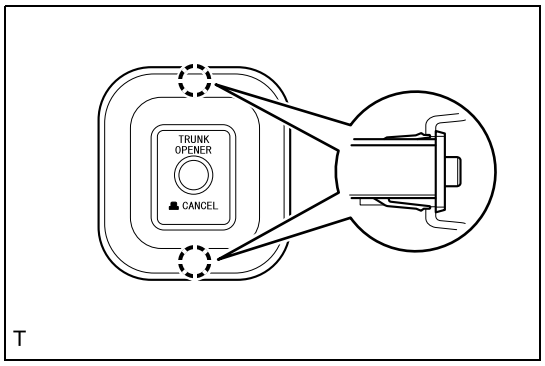

4. Removal of the trunk key unlock switch
   (1) Release the 2 tabs and remove the trunk key unlock switch.

Installation

1. Installation of the trunk key unlock switch
   (1) Fit in the 2 tabs and install the trunk key unlock switch.
2. Installation of the trunk trim cover INN RH
   (1) Connect the connector.
   (2) Using 5 clips, install the trunk trim cover INN RH.
3. Installation of the rear floor finish plate (Refer to LE - 63)
4. Installation of the trunk floor mat

Unit inspection

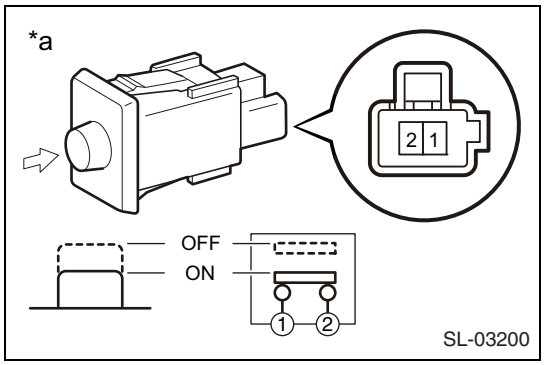

1. Inspection of the trunk key unlock switch
   (1) Measure the resistance between the terminals.

Resistance

Inspection terminals	Inspection conditions	Standard value
1 - 2	When the switch is in use (ON)	Less than 1 Ω
1 - 2	When the switch is not in use (OFF)	10 kΩ or more

Captions in illustration

*a	Connector not connected (Trunk key unlock switch)

Cable ASSY fuel

Exploded view

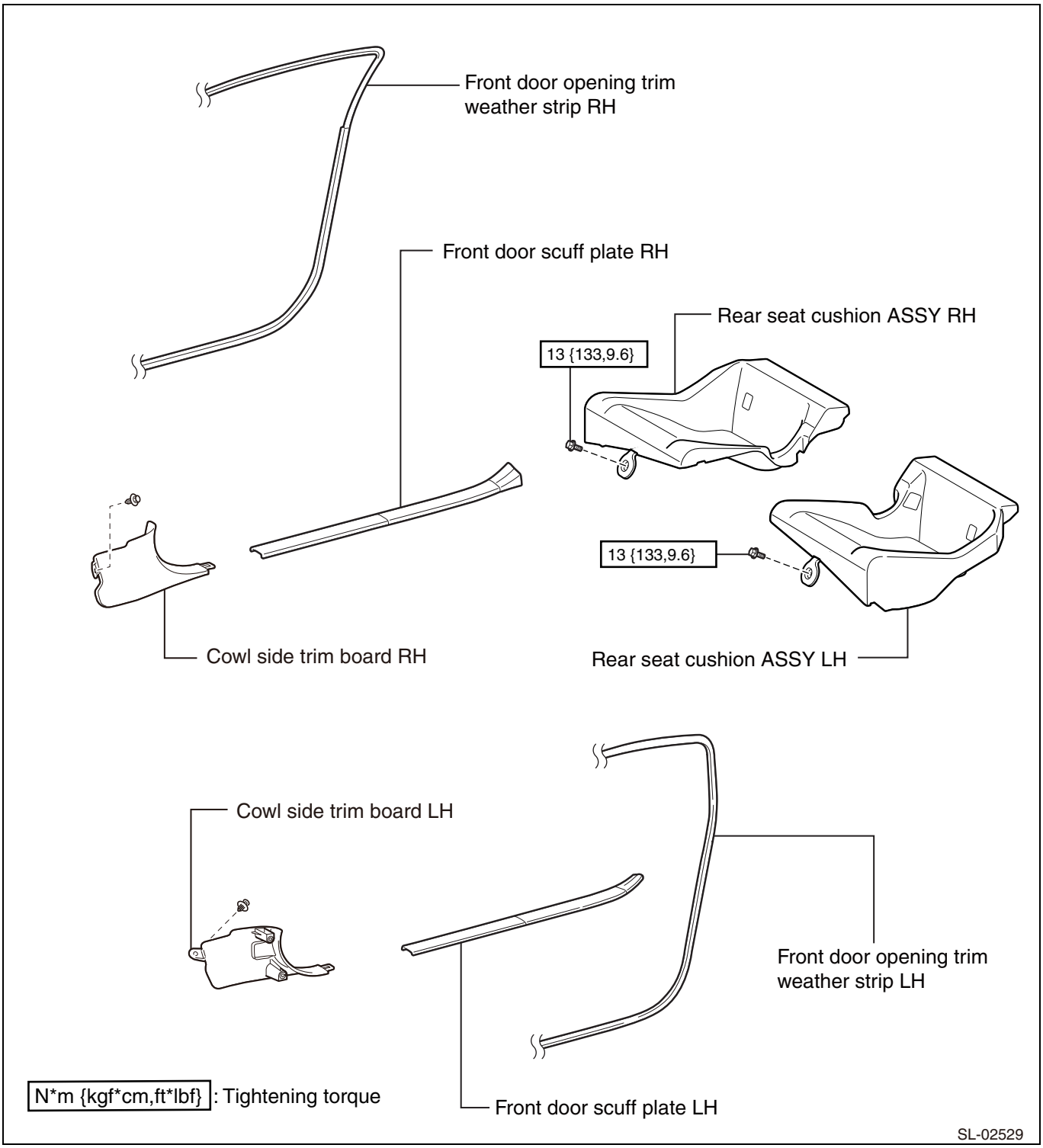

DH

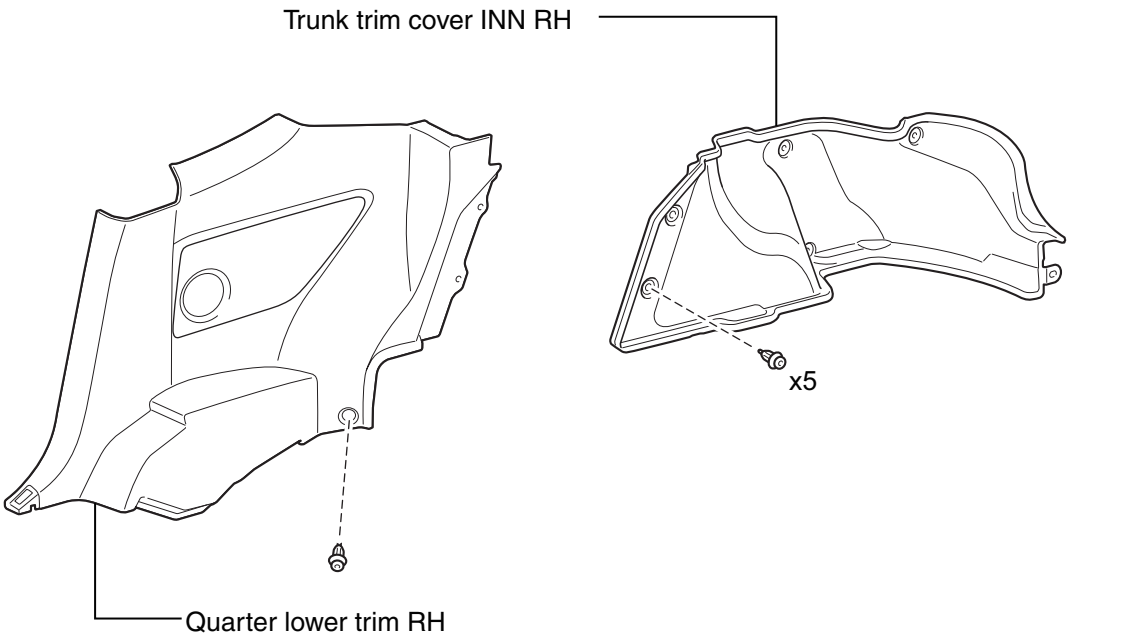
Trunk trim cover INN RH
x5
Quarter lower trim RH

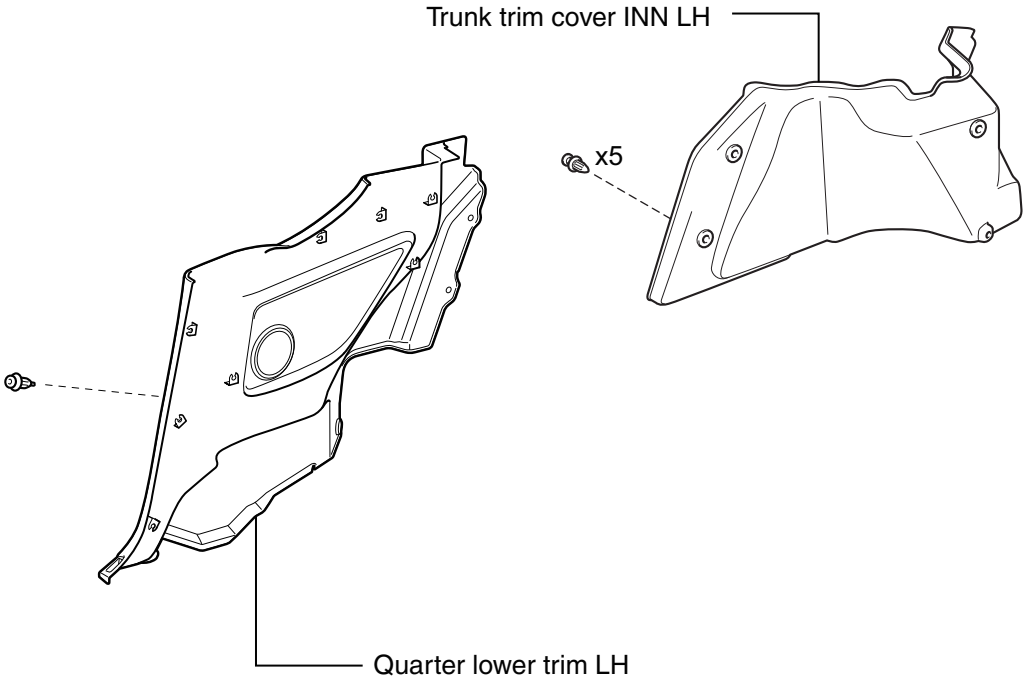
Trunk trim cover INN LH
x5
Quarter lower trim LH

SL-02173

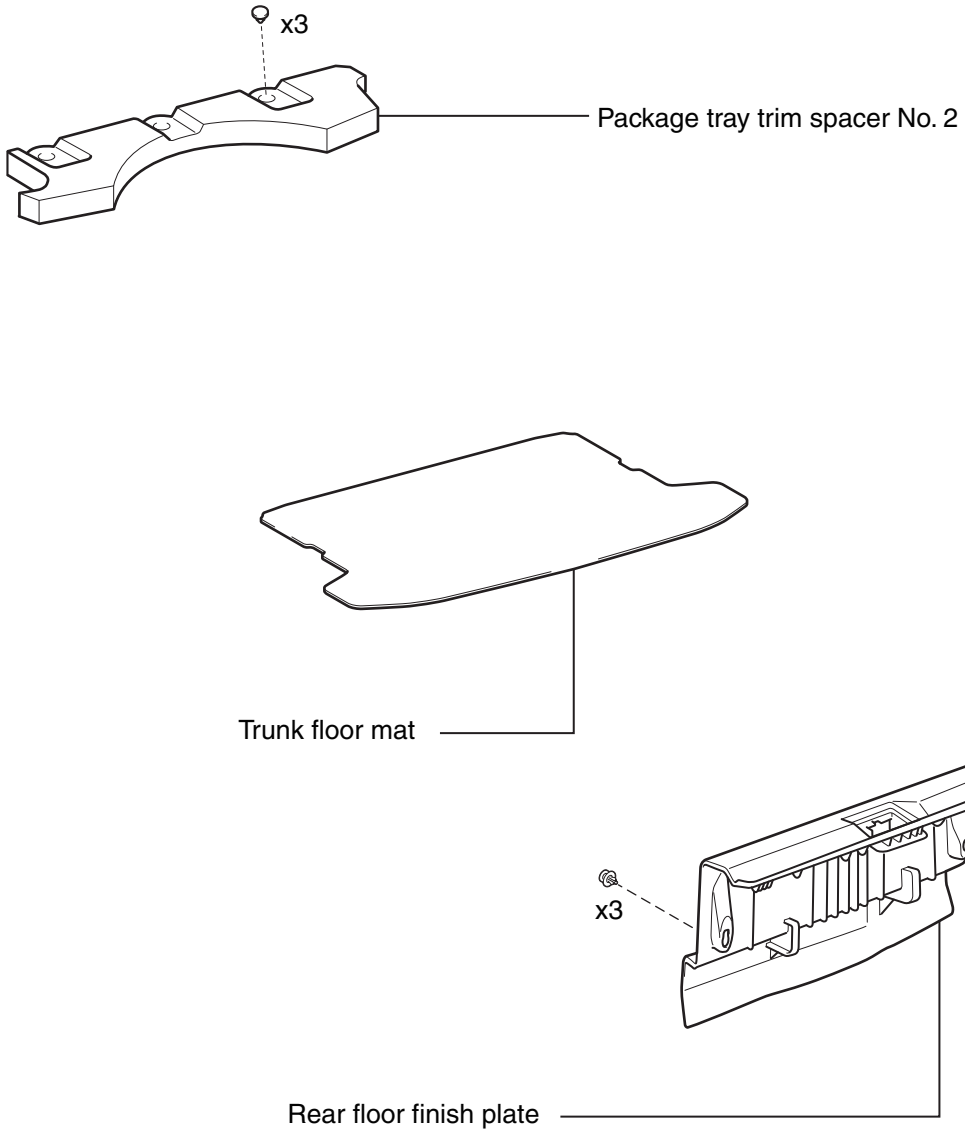
x3
Package tray trim spacer No. 2
Trunk floor mat
x3
Rear floor finish plate
SL-02534

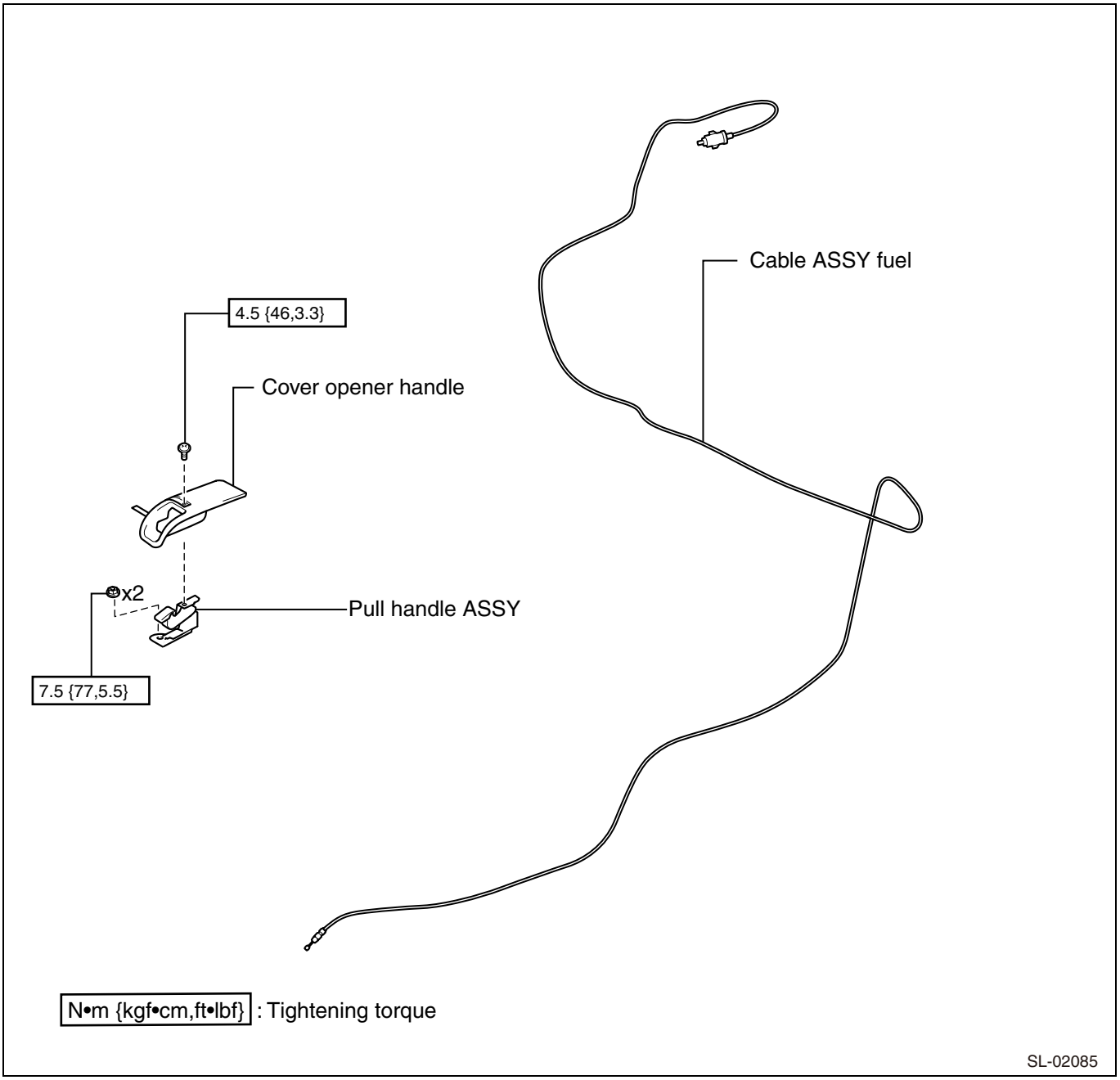

DH

Removal

1. Removal of the front door scuff plate LH and cowl side trim board LH (Refer to IT - 48)
2. Disconnection of the front door opening trim weather strip LH
   (1) Disconnect the front door opening trim weather strip LH in a range you can work. (Refer to IT - 48)
3. Removal of the front door scuff plate RH and cowl side trim board RH (Refer to IT - 48)
4. Removal of front door opening trim weather strip RH (Refer to IT - 48)
5. Removal of the front seat ASSY (Refer to SE - 11)
6. Removal of the rear seat cushion ASSY LH (Refer to SE - 31)
7. Removal of the rear seat cushion ASSY RH (Refer to SE - 31)
8. Removal of the trunk floor mat
9. Removal of the rear floor finish plate (Refer to LE - 61)

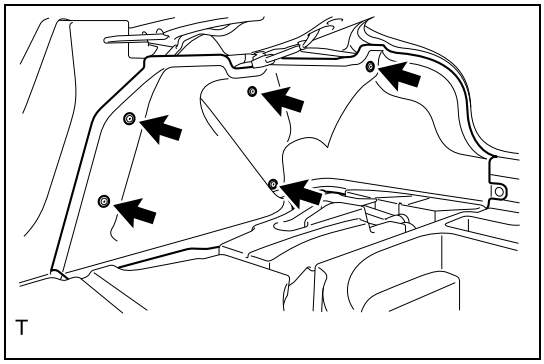
T

10. Removal of the trunk trim cover INN RH
    (1) Using a clip remover, remove the 5 clips and remove the trunk trim cover INN RH.

11. Removal of the trunk trim cover INN LH (Refer to DH - 73)
12. Removal of quarter lower trim LH (Refer to IT - 49)
13. Removal of quarter lower trim RH (Refer to IT - 49)

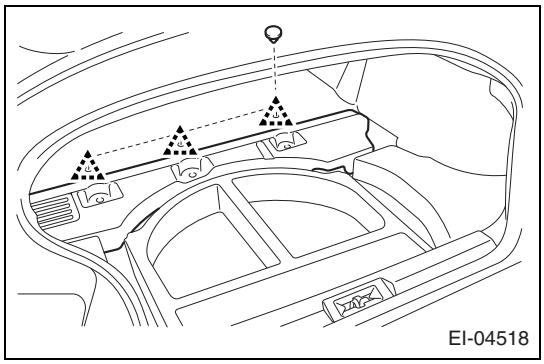
EI-04518

14. Removal of the package tray trim spacer NO. 2
    (1) Using a clip remover, remove the 3 clips and remove the package tray trim spacer NO. 2.

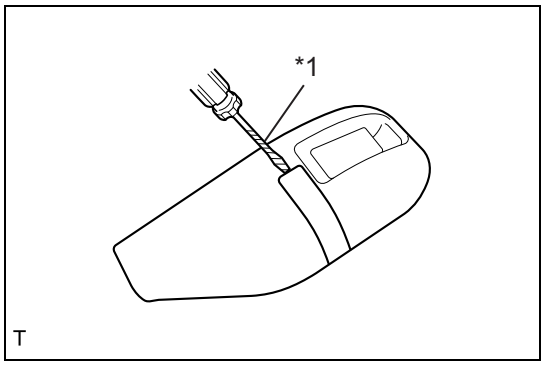

T

15. Removal of the cover opener handle
    (1) Using a flat head screw driver wrapped in protective tape, release the tab.

Captions in illustration

*1	Protective tape

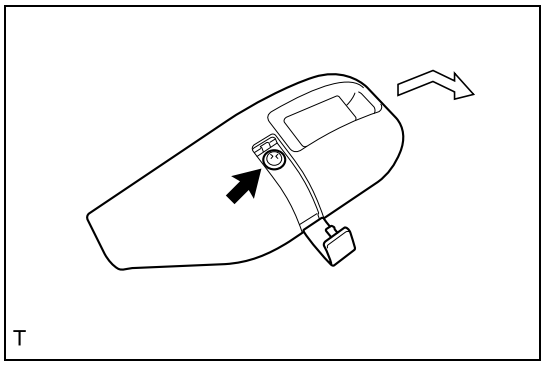
T

    (2) Remove the screw and slide the cover opener handle as in the figure to remove it.

DH

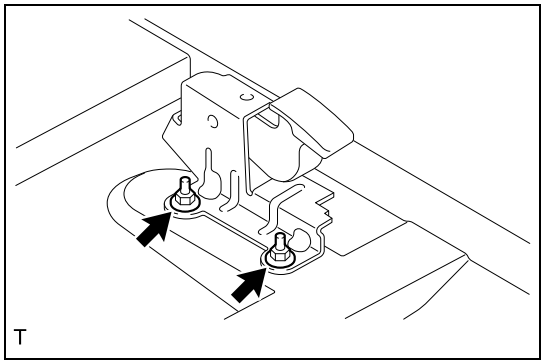

16. Removal of the pull handle ASSY
    (1) Turn over the floor carpet.
    NOTE:
    Turn over the floor carpet to a range where you can install and remove the cable ASSY fuel.
    (2) Remove 2 nuts and remove the pull handle ASSY.

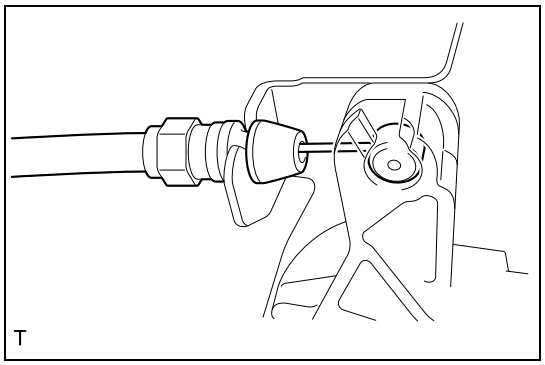

    (3) Remove the cable ASSY fuel from the pull handle ASSY.

17. Removal of the cable ASSY fuel
    (1) Turn over the floor carpet to a range where you can remove the cable ASSY fuel.

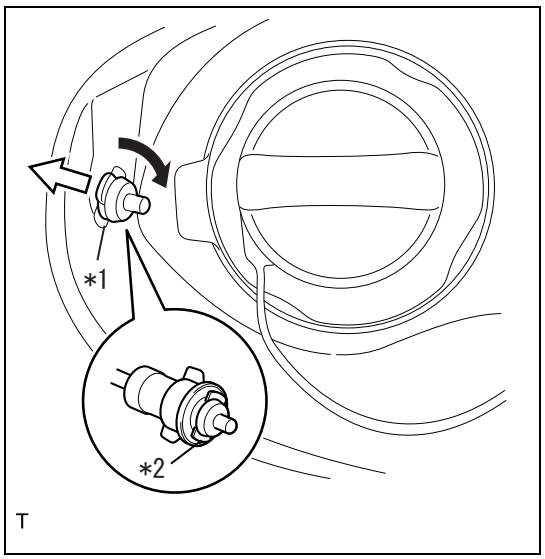

    (2) As in the figure, turn the cable ASSY fuel, align the guide with the cutout on the body side, and pull out the cable ASSY fuel.

Captions in illustration

*1	Cutout
*2	Guide

    (3) Using a flat head screw driver wrapped in protective tape, release each clamp shown in the figure, and remove the cable ASSY fuel.

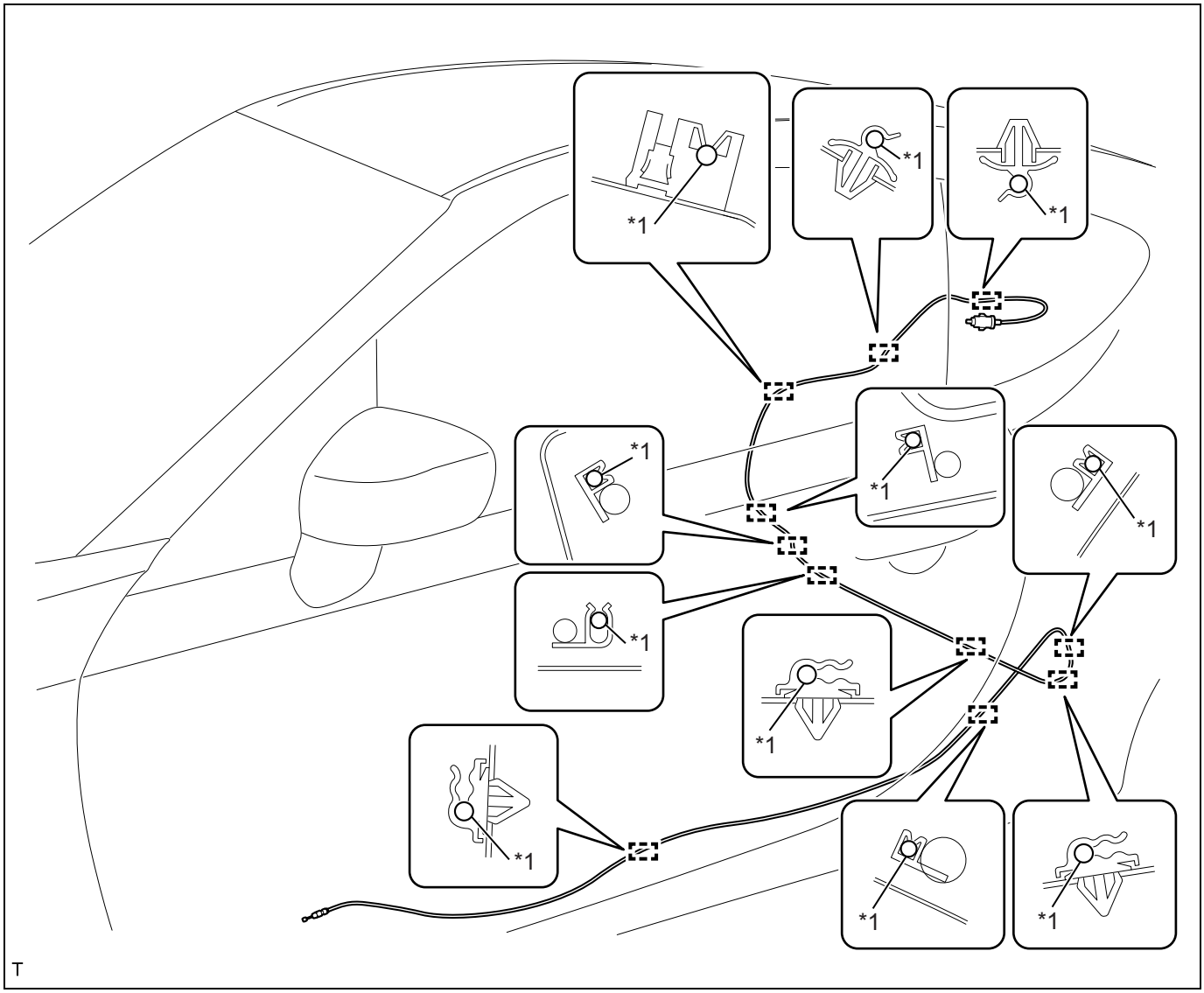

Captions in illustration

*1	Cable ASSY fuel	-	-

Installation

1. Installation of cable ASSY fuel
   (1) Engage the each clamp and install the cable ASSY fuel.

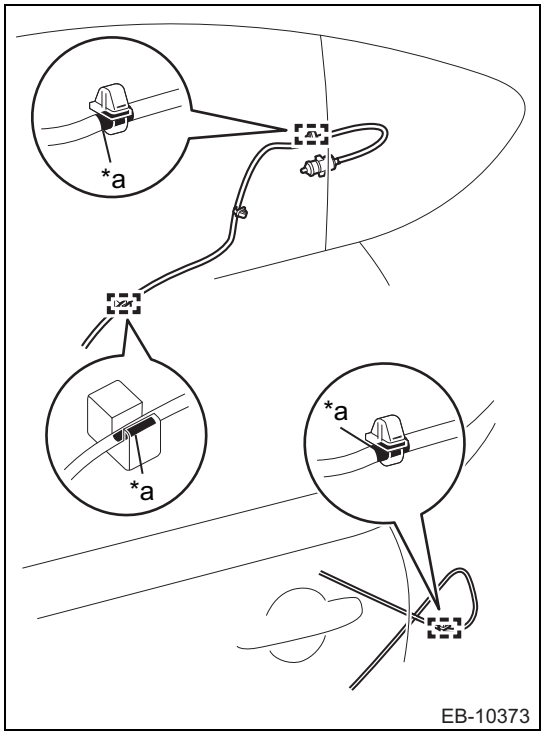

(2) Check that the center of the cable ASSY fuel marking tape matches the center of the clamps in the figure.
CAUTION:
Make sure there are no twists in the cable ASSY fuel.

Captions in illustration

*a	Alignment marks

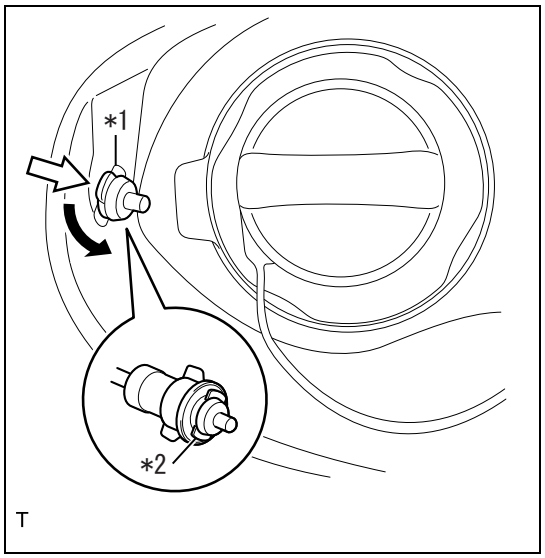

(3) As in the figure, align the guide of the cable ASSY fuel with the cut-out on the body side, and turn in the direction of the arrow to install the cable ASSY fuel.

Captions in illustration

*1	Cutout
*2	Guide

DH

2. Installation of the pull handle ASSY
   (1) Install the cable ASSY fuel on the pull handle ASSY.
   (2) Using 2 nuts, install the pull handle ASSY.
   Standard value:T=7.5N·m {77kgf·cm} {5.5ft·lbf}
   (3) Return the floor carpet to its original position.
3. Installation of the cover opener handle
   (1) Slide the cover opener handle towards the rear, and install on the pull handle ASSY.
   (2) Install the cover opener handle with the screw.
   Standard value:T=4.5N·m {46kgf·cm} {3.3ft·lbf}
4. Installation of the package tray trim spacer NO. 2
   (1) Using 3 clips, install the package tray trim spacer NO. 2
5. Installation of the quarter lower trim LH (Refer to IT - 58)
6. Installation of the quarter lower trim RH (Refer to IT - 58)
7. Installation of the trunk trim cover INN RH
   (1) Using 5 clips, install the trunk trim cover INN RH.

8. Installation of the trunk trim cover INN LH (Refer to DH - 73)
9. Installation of the rear floor finish plate (Refer to LE - 63)
10. Installation of the trunk floor mat
11. Installation of the rear seat cushion ASSY RH (Refer to SE - 39)
12. Installation of the rear seat cushion ASSY LH (Refer to SE - 39)
13. Installation of the front seat ASSY LH, RH (Refer to SE - 25)
14. Connection of the front door opening trim weather strip LH, RH (Refer to IT - 58)
15. Installation of the front door scuff plate LH, RH and cowl side trim board LH, RH (Refer to IT - 58)

Outer mirror

Electric mirror system
- Parts location MX-2
- Symptom table MX-3

Outer rear-view mirror
- Exploded view MX-4
- Removal MX-5
- Disassembly MX-6
- Assembly MX-7
- Installation MX-7
- Unit inspection MX-8

Outer rear-view mirror glass
- Exploded view MX-10
- Removal MX-10
- Installation MX-11

Outer mirror switch
- Exploded view MX-13
- Removal MX-13
- Installation MX-14
- Unit inspection MX-14

Relay
- Unit inspection MX-16

Electric mirror system

Parts location

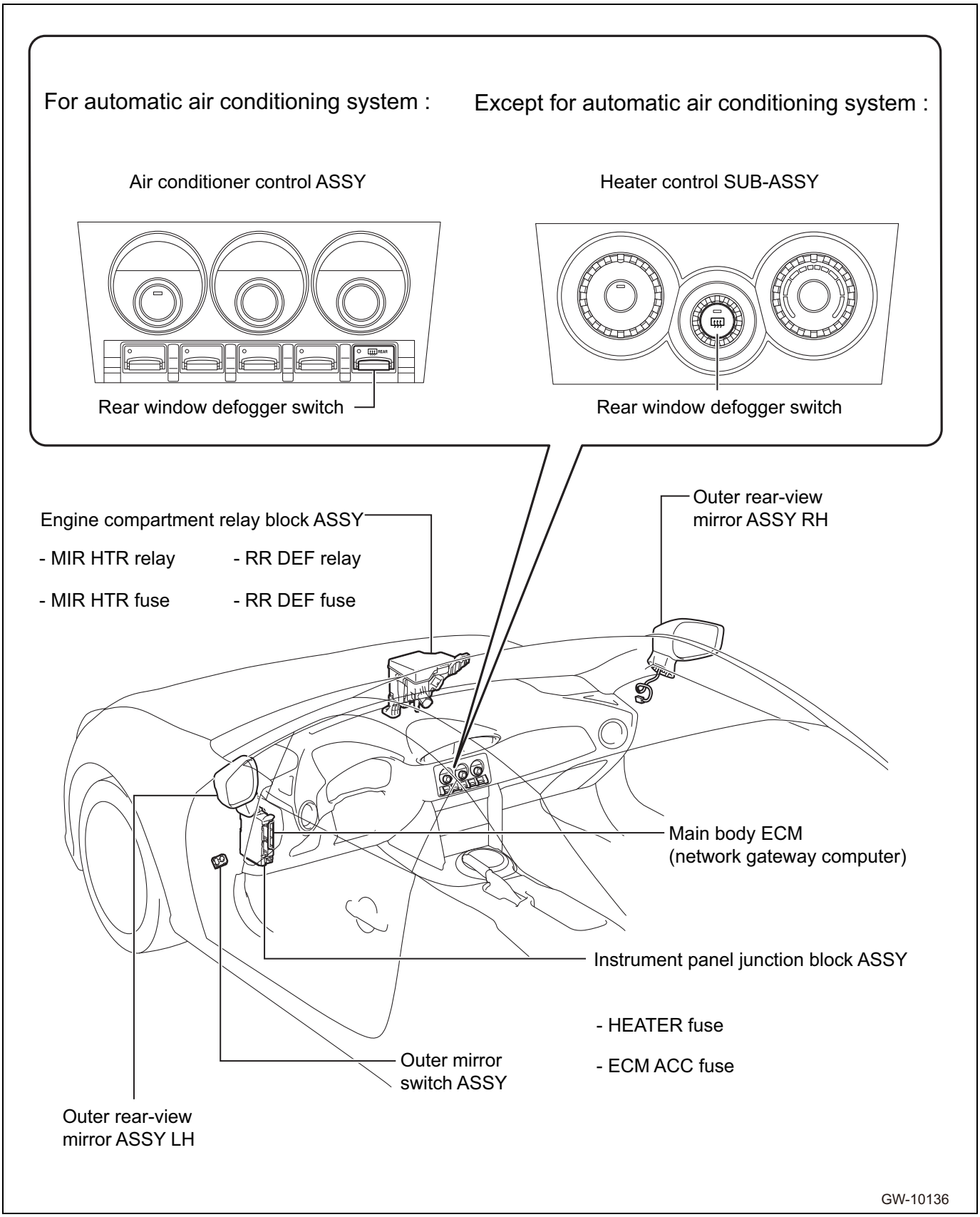

MX

Symptom table

General

Symptoms	Inspection items	Reference pages
Mirror heater doesn't operate. (Window defogger system operates normally)	MIR HTR fuse	-
	MIR HTR relay	-
	Outer rear-view mirror ASSY RH	MX - 8
	Outer rear-view mirror ASSY LH	MX - 8
	Vehicle wiring harness and connector	-
Mirror heater doesn't operate. (Window defogger system also doesn't operate)	See the rear window defogger system	WS - 89

Outer rear-view mirror

Exploded view

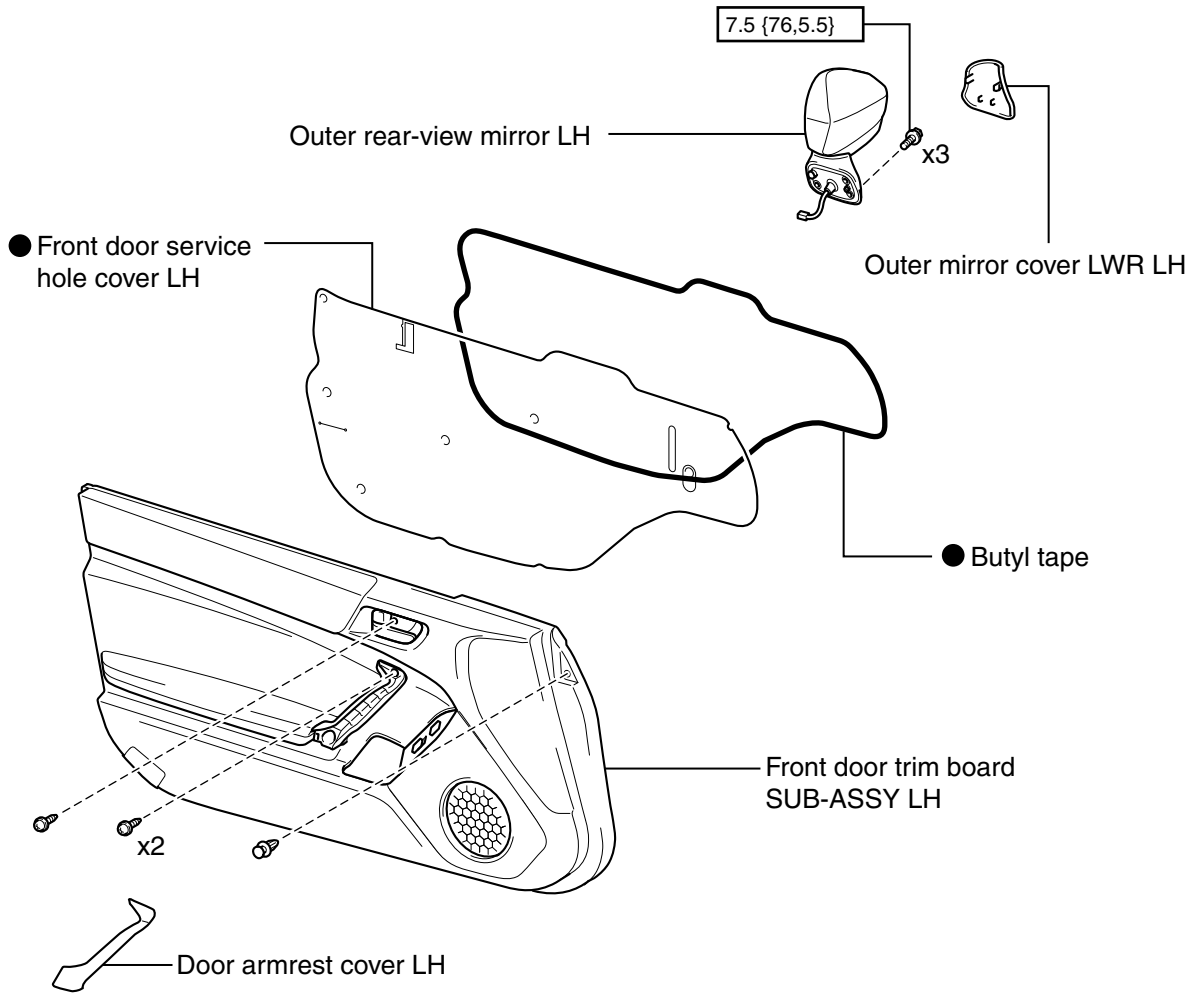

N•m {kgf•cm, ft•lbf} : Tightening torque

● Non-reusable parts

GW-01212

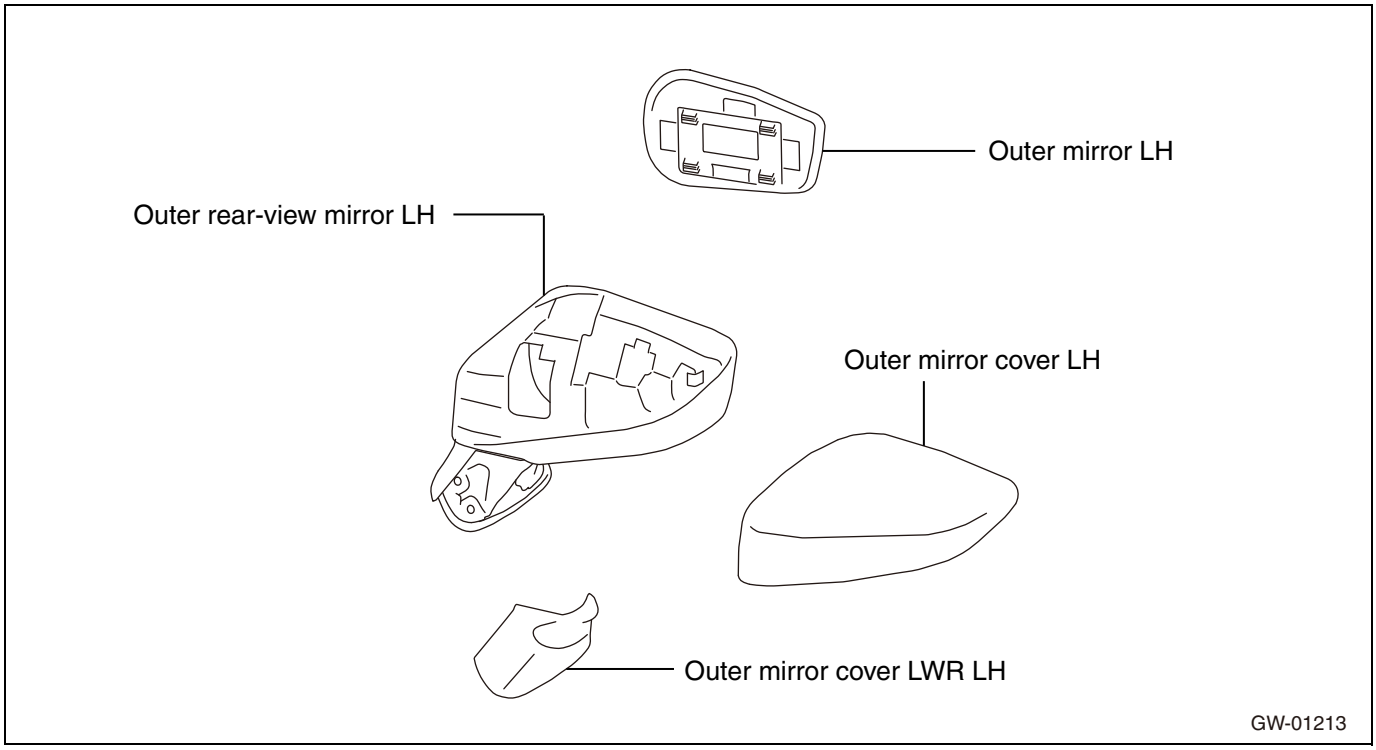

Removal

NOTE:

The following procedure is for LH side. Perform the same procedures for the RH and LH side.

1. Removal of the door armrest cover LH (Refer to DH - 32)
2. Removal of the front door trim board SUB-ASSY LH (Refer to DH - 32)
3. Removal of the front door service hole cover LH (Refer to DH - 36)

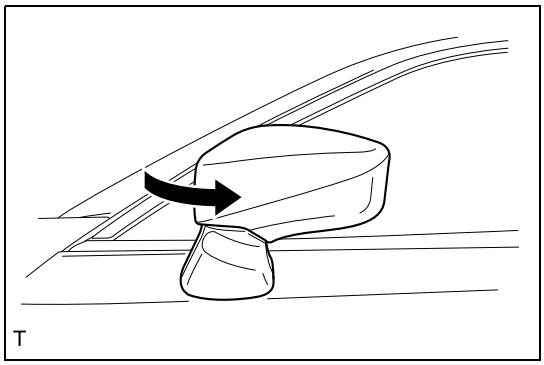

4. Removal of the outer mirror cover LWR LH
   (1) Retract the outer rear-view mirror LH.

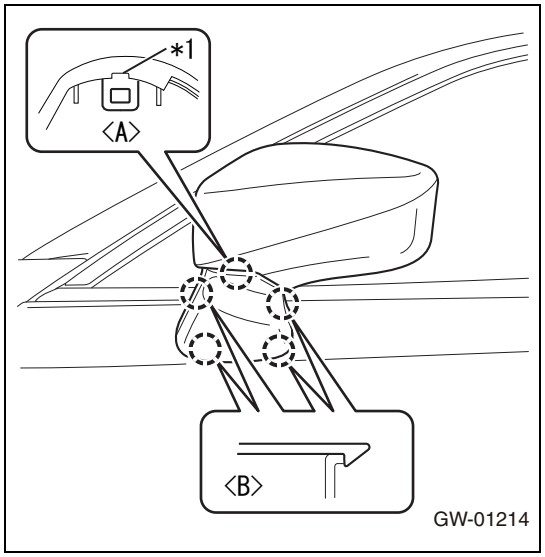

(2) Using a flat tip screwdriver that is wrapped in protective tape, release tab <A> from the slit.
(3) Release the 4 <B> tabs and remove the outer mirror cover LWR LH.

Captions in illustration

*1	Slit

5. Removal of the outer rear-view mirror LH
   (1) Disconnect the connector.

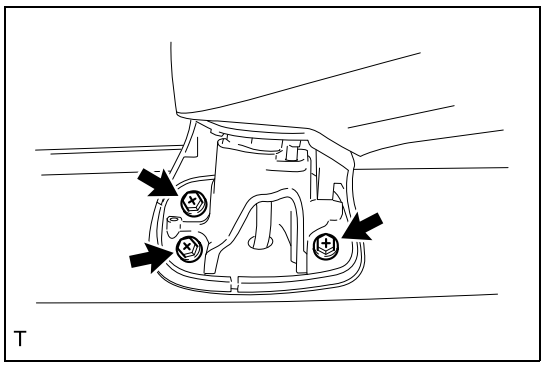

(2) Remove the 3 bolts and remove the outer rear-view mirror LH.

Disassembly

NOTE:
The following procedure is for LH side. Perform the same procedures for the RH and LH side.

1. Removal of the outer mirror LH (Refer to MX - 10)
2. Removal of the outer mirror cover LH

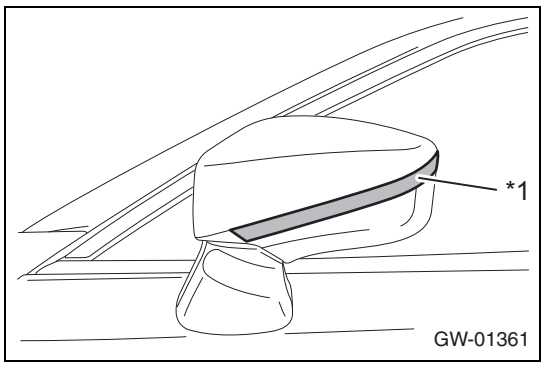

(1) Apply protective tape to the location shown in the figure.

Captions in illustration

*1	Protective tape

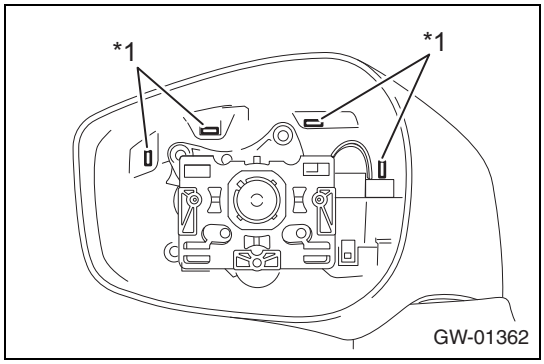

(2) Using a flat tip screwdriver, release the 4 tabs.

Captions in illustration

*1	tabs

(3) Insert the molding remover.

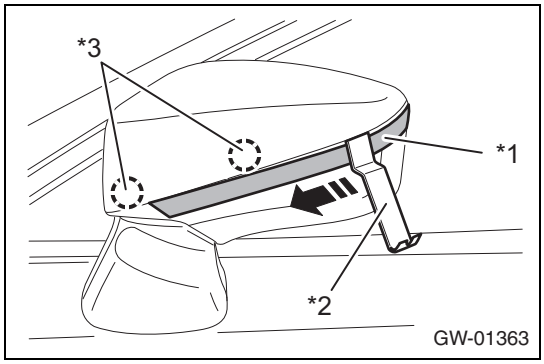

(4) Slowly slide the molding remover in the direction of an arrow, and remove the engaged tabs to remove the outer mirror cover LH.

Captions in illustration

*1	Protective tape
*2	Molding remover
*3	tabs

Assembly

NOTE:

The following procedure is for LH side. Perform the same procedures for the RH and LH side.

1. Installation of the outer mirror LH (Refer to MX - 11)

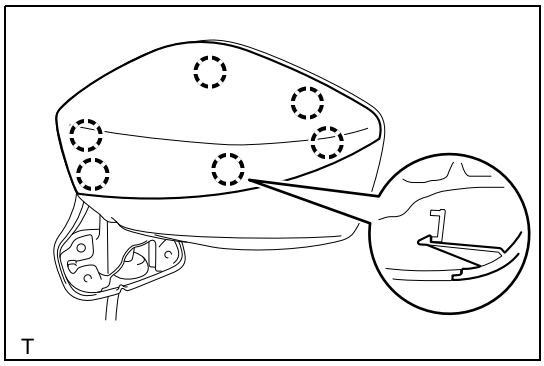

2. Installation of the outer mirror cover LH
   (1) Fit in the 6 tabs and install the outer mirror cover LH.

Installation

NOTE:

The following procedure is for LH side. Perform the same procedures for the RH and LH side.

1. Installation of the outer rear-view mirror LH
   (1) Retract the outer rear-view mirror LH.
   (2) Using 3 bolts, install the outer rear view mirror LH.
   Standard value:T=7.5N·m {76kgf·cm} {5.5ft·lbf}

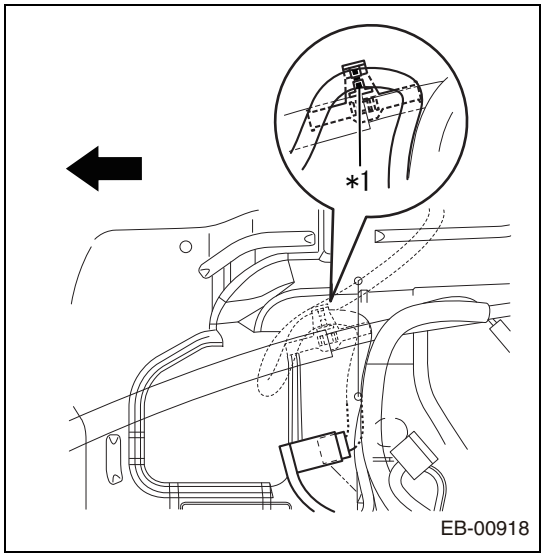

(3) Align the alignment mark of the wiring harness with the harness clip on the body side, and install the wiring harness.

Captions in illustration

*1	Alignment marks
➡	Front side of the vehicle

2. Installation of the outer mirror cover LWR LH
   (1) Fit in the 5 tabs and install the outer mirror cover LWR LH.
3. Installation of the front door service hole cover LH (Refer to DH - 49)
4. Installation of the front door trim board SUB-ASSY LH (Refer to DH - 52)
5. Installation of the door armrest cover LH (Refer to DH - 54)

Unit inspection

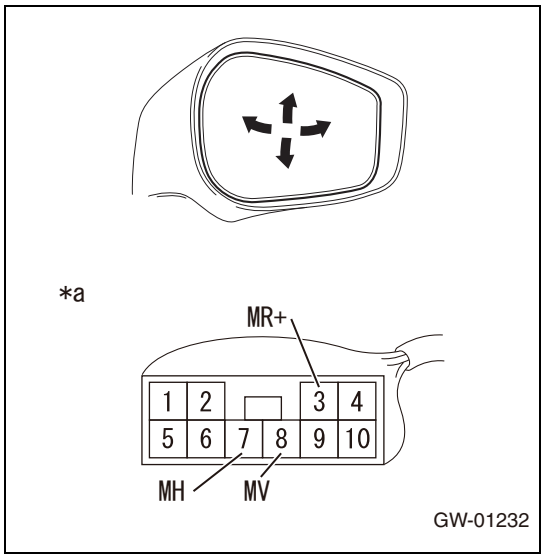

1. Inspection of the outer rear-view mirror RH
   (1) Operation inspection for the mirror surface position
      (a) Inspect operation when battery voltage is applied between connector terminals.
      Criteria

Battery connection	Operation direction
Battery positive →3 (MR+) Battery ground →8 (MV)	Upward
Battery positive →8 (MV) Battery ground →3 (MR+)	Downward
Battery positive →3 (MR+) Battery ground →7 (MH)	Rightward
Battery positive →7 (MH) Battery ground →3 (MR+)	Leftward

Captions in illustration

*a	Connector not connected (Outer rear-view mirror RH)

   (2) Inspection for the mirror heater (when there is a mirror heater)
      (a) Measure the resistance according to the following chart.

Resistance

Inspection terminals (Terminal symbol)	Inspection conditions	Standard value
4 (+) - 10 (-)	23°C {73°F}	9.6 to 14.4 Ω

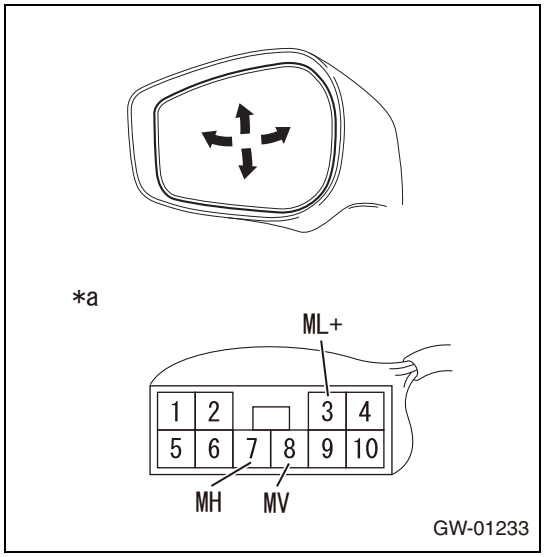

2. Inspection of the outer rear-view mirror LH
   (1) Operation inspection for the mirror surface position
      (a)Inspect operation when battery voltage is applied between connector terminals.
      Criteria

Battery connection	Operation direction
Battery positive →3 (ML+) Battery ground →8 (MV)	Upward
Battery positive →8 (MV) Battery ground →3 (ML+)	Downward
Battery positive →3 (ML+) Battery ground →7 (MH)	Rightward
Battery positive →7 (MH) Battery ground →3 (ML+)	Leftward

Captions in illustration

*a	Connector not connected (Outer rear-view mirror LH)

   (2) Inspection for the mirror heater (when there is a mirror heater)
      (a)Measure the resistance according to the following chart.

Resistance

Inspection terminals (Terminal symbol)	Inspection conditions	Standard value
4 (+) - 10 (-)	23°C {73°F}	9.6 to 14.4 Ω

Outer rear-view mirror glass

Exploded view

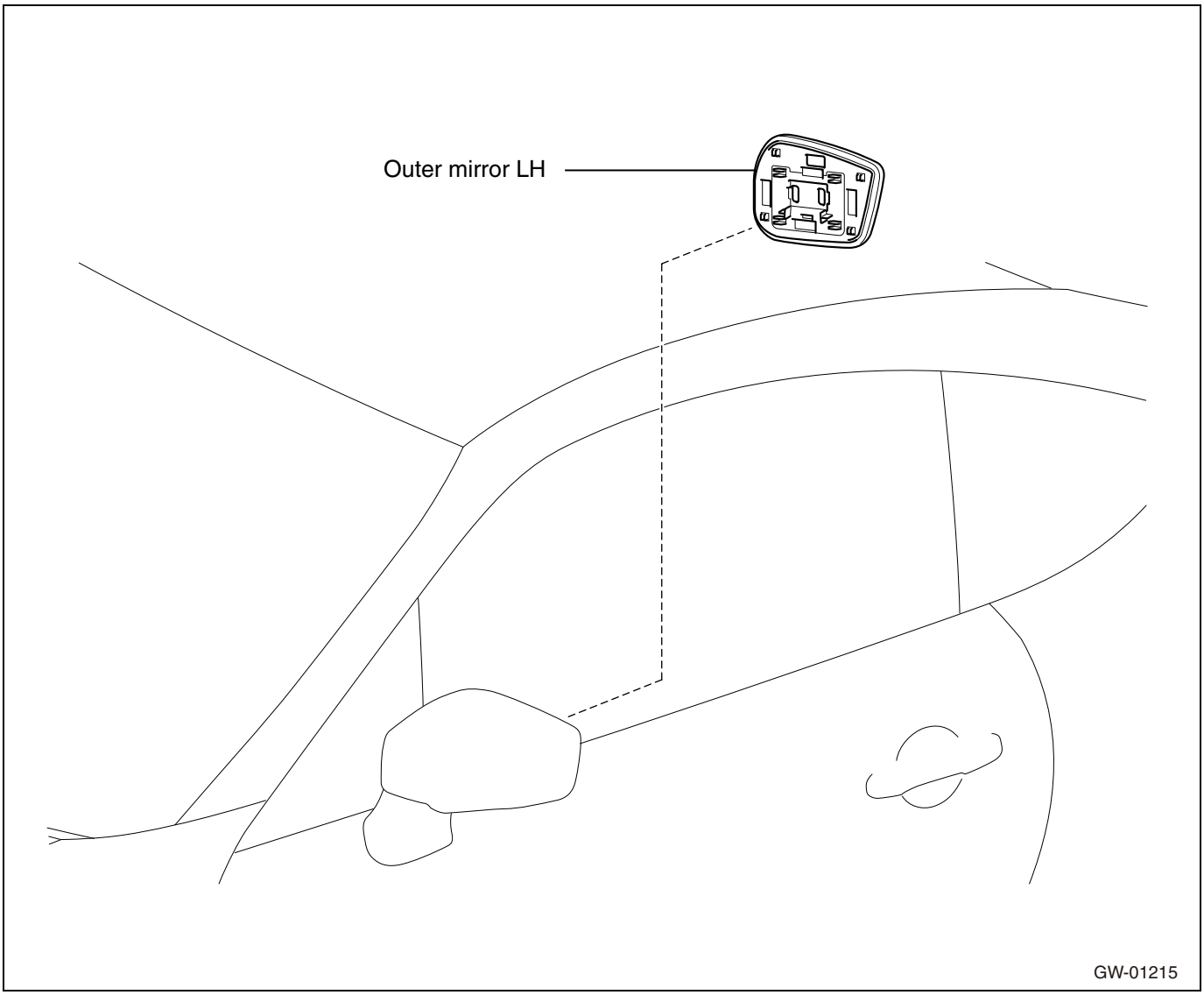

Removal

NOTE:

The following procedure is for LH side. Perform the same procedures for the RH and LH side.

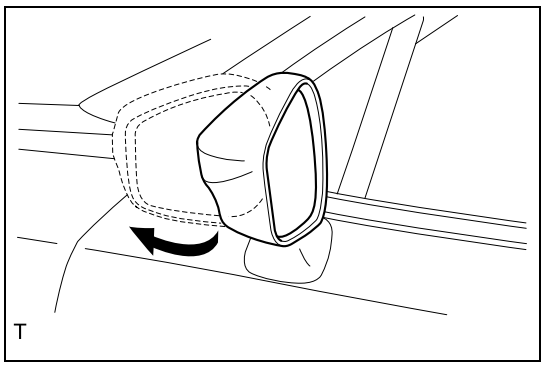

1. Removal of the outer mirror LH
   (1) As shown in the figure, tilt the outer rear-view mirror LH in the forward retracting direction.

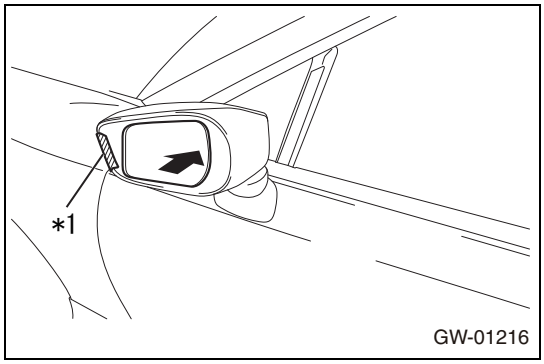

(2) Push the inside of the mirror surface and face the mirror surface towards the interior of the vehicle.
(3) Apply protective tape to the location in the figure.

Captions in illustration

*1	Protective tape

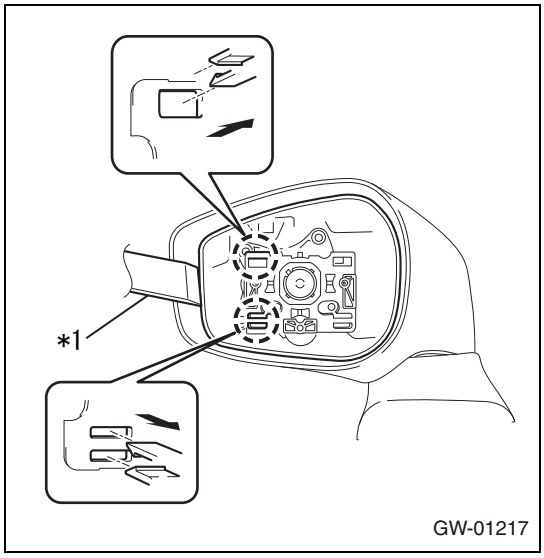

(4) Using a molding remover, release the 2 tabs.
CAUTION:
Be careful not to pull the outer mirror LH with excessive force, as this may disconnect the actuator mechanism or crack the mirror.

*1	Molding remover

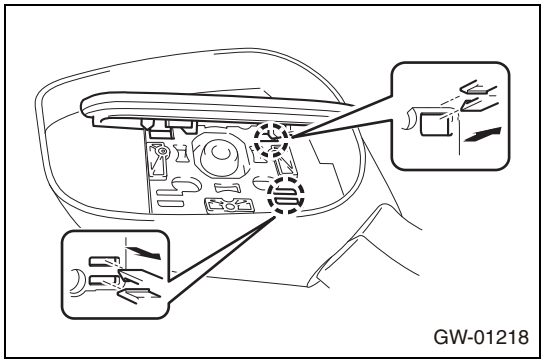

(5) When there is no mirror heater:
(a)Release the 2 tabs and remove the outer mirror LH.

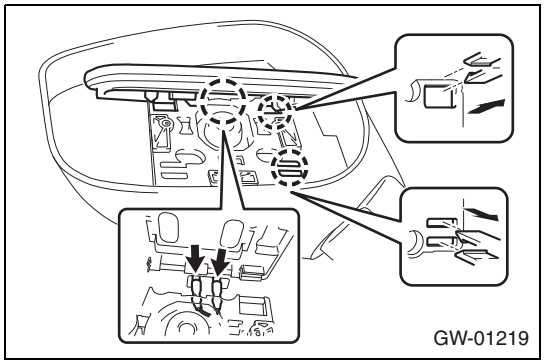

(6) With a mirror heater:
(a)Release the 2 tabs.
(b)Disconnect the 2 connectors and remove the outer mirror LH.

MX

Installation

NOTE:
The following procedure is for LH side. Perform the same procedures for the RH and LH side.

1. Installation of the outer mirror LH
   (1) When there is no mirror heater:
      (a)Fit in the 2 claws.
   (2) With a mirror heater:
      (a)Connect the 2 connectors.
      (b)Fit in the 2 claws.

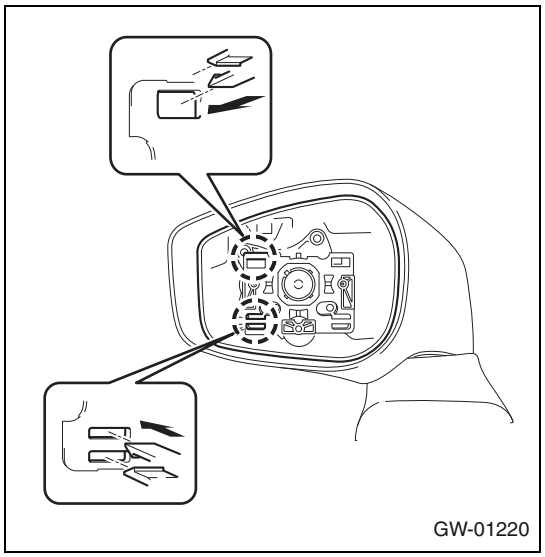

(3) Fit in the 2 tabs and install the outer mirror LH.
CAUTION:
Be careful not to push the outer rear-view mirror glass with excessive force, as this may crack the mirror.

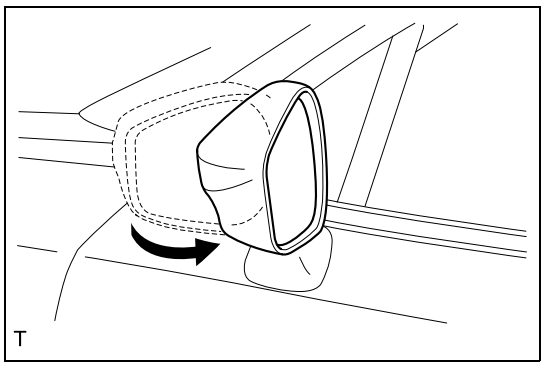

(4) Push the outer rear-view mirror LH in the direction shown in the figure.

Outer mirror switch

Exploded view

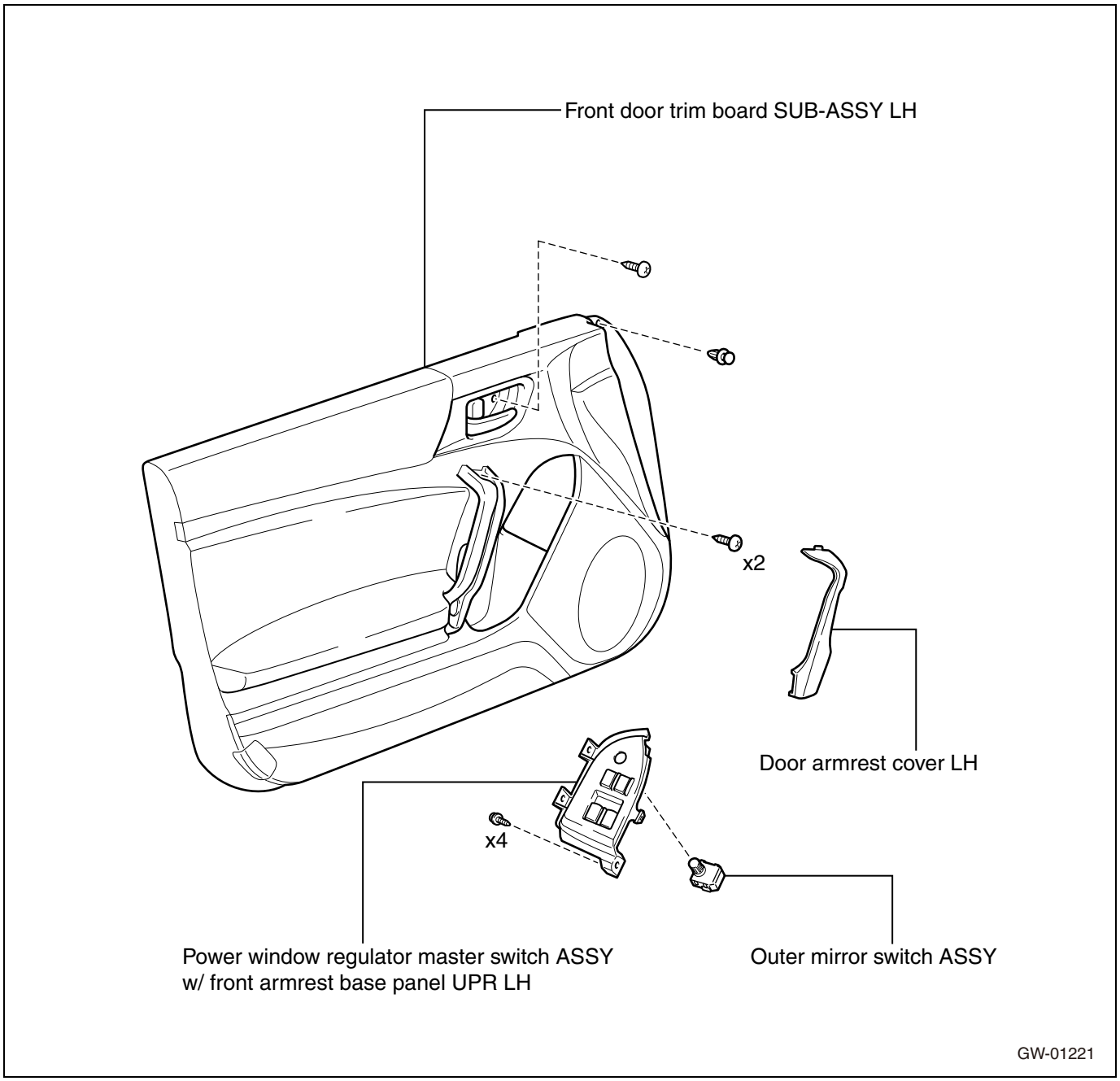

Removal

1. Removal of the door armrest cover LH (Refer to DH - 32)
2. Removal of the front door trim board SUB-ASSY LH (Refer to DH - 32)
3. Removal of the power window regulator master switch ASSY W/ front armrest base panel UPR LH (Refer to DH - 33)

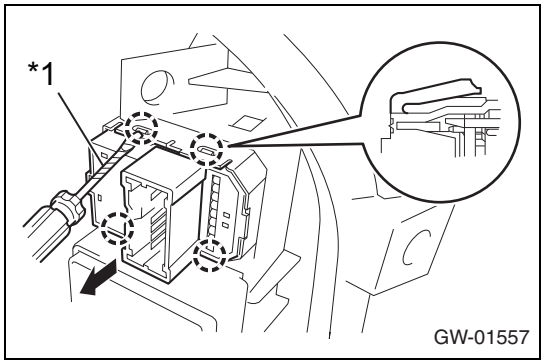

4. Removal of the outer mirror switch ASSY
   (1) Using a thin flat tip screwdriver wrapped with protective tape, release the 4 tabs and remove the outer mirror switch ASSY.

*1	Protective tape

Installation

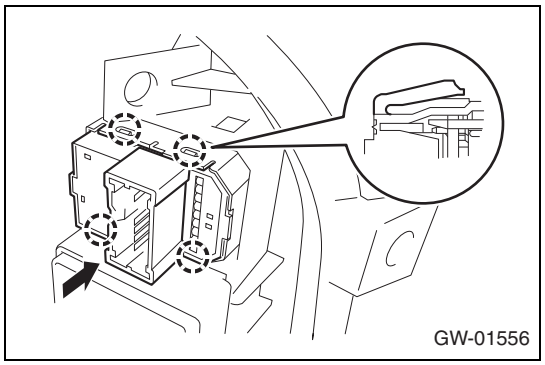

1. Installation of the outer mirror switch ASSY
   (1) Fit in the 4 tabs and install the outer mirror switch ASSY.
2. Installation of the power window regulator master switch ASSY W/ front armrest base panel UPR LH (Refer to DH - 52)
3. Installation of the front door trim board SUB-ASSY LH (Refer to DH - 52)
4. Installation of the door armrest cover LH (Refer to DH - 54)

Unit inspection

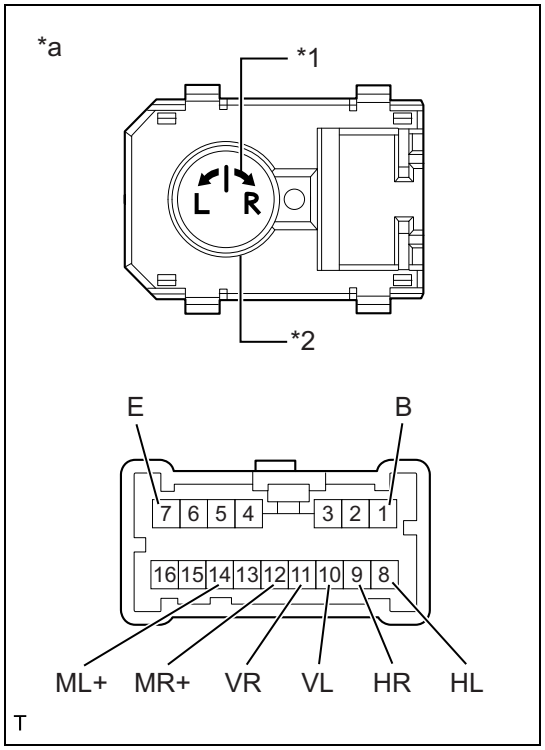

1. Inspection of the outer mirror switch ASSY
   (1) Resistance check
      (a) Measure the resistance between connector terminals when each switch is operated.

Resistance

Positioning switch (Side to side changing switch, left side)

Inspection terminals (Terminal symbol)	Inspection conditions	Standard value
1 (B) - 14 (ML+) 10 (VL) - 7 (E)	Hold down the "Up" switch	Less than 1 Ω
1 (B) - 10 (VL) 14 (ML+) - 7 (E)	Hold down the "Down" switch	Less than 1 Ω
1 (B) - 8 (HL) 14 (ML+) - 7 (E)	Hold down the "Left" switch	Less than 1 Ω
1 (B) - 14 (ML+) 8 (HL) - 7 (E)	Hold down the "Right" switch	Less than 1 Ω

Resistance

Positioning switch (Side to side changing switch, right side)

Inspection terminals (Terminal symbol)	Inspection conditions	Standard value
1 (B) - 12 (MR+) 11 (VR) - 7 (E)	Hold down the "Up" switch	Less than 1 Ω
1 (B) - 11 (VR) 12 (MR+) - 7 (E)	Hold down the "Down" switch	Less than 1 Ω
1 (B) - 9 (HR) 12 (MR+) - 7 (E)	Hold down the "Left" switch	Less than 1 Ω
1 (B) - 12 (MR+) 9 (HR) - 7 (E)	Hold down the "Right" switch	Less than 1 Ω

Captions in illustration

*1	Positioning switch
*2	Side to side changing switch
*a	Connector not connected (Outer mirror switch ASSY)

Relay

Unit inspection

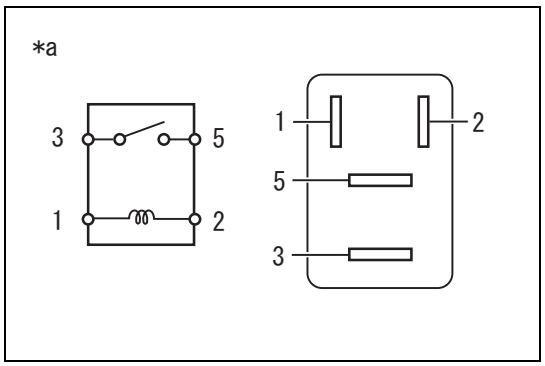

1. Inspection of the MIR HTR relay
   (1) Measure the resistance between connector terminals.

Resistance

Inspection terminals	Inspection conditions	Standard value
3 - 5	When battery voltage is not applied between terminals 1 and 2.	10 kΩ or more
	When battery voltage is applied between terminals 1 and 2.	Less than 1 Ω

Captions in illustration

*a	Relay not connected (MIR HTR relay)

Wipers & washers

Wiper & washer system
- Precautions WW-2
- Parts location WW-2
- Symptom table WW-3
- How to troubleshoot WW-3
- Check list for interview WW-5
- Circuit figure WW-6

Front wiper motor
- Exploded view WW-7
- Removal WW-9
- Installation WW-12
- On-vehicle inspection WW-17
- Unit inspection WW-17

Front wiper rubber
- Exploded view WW-18
- Replacement WW-18

Wiper switch
- Exploded view WW-21
- Removal WW-21
- Installation WW-23
- On-vehicle inspection WW-24
- Unit inspection WW-25

Washer motor
- Exploded view WW-26
- Removal WW-26
- Installation WW-28
- On-vehicle inspection WW-28

Washer tank
- Exploded view WW-29
- Removal WW-30
- Installation WW-30

Washer nozzle
- Exploded view WW-31
- Removal WW-31
- Installation WW-32
- Adjustment WW-32
- On-vehicle inspection WW-33

Wiper & washer system

Precautions

1. Precautions when handling the washer nozzle
   (1) Using thin flat tip screwdrivers wrapped with protective tape, the washer spray location can be adjusted.
   CAUTION:
   Because it may damage the washer nozzle discharge port and cause the washer liquid not to be sprayed correctly, do not insert a screwdriver into the washer nozzle discharge port.
   (2) If something, such as wax, is clogging the washer nozzle, use a soft plastic brush or something similar to clean it out.

Parts location

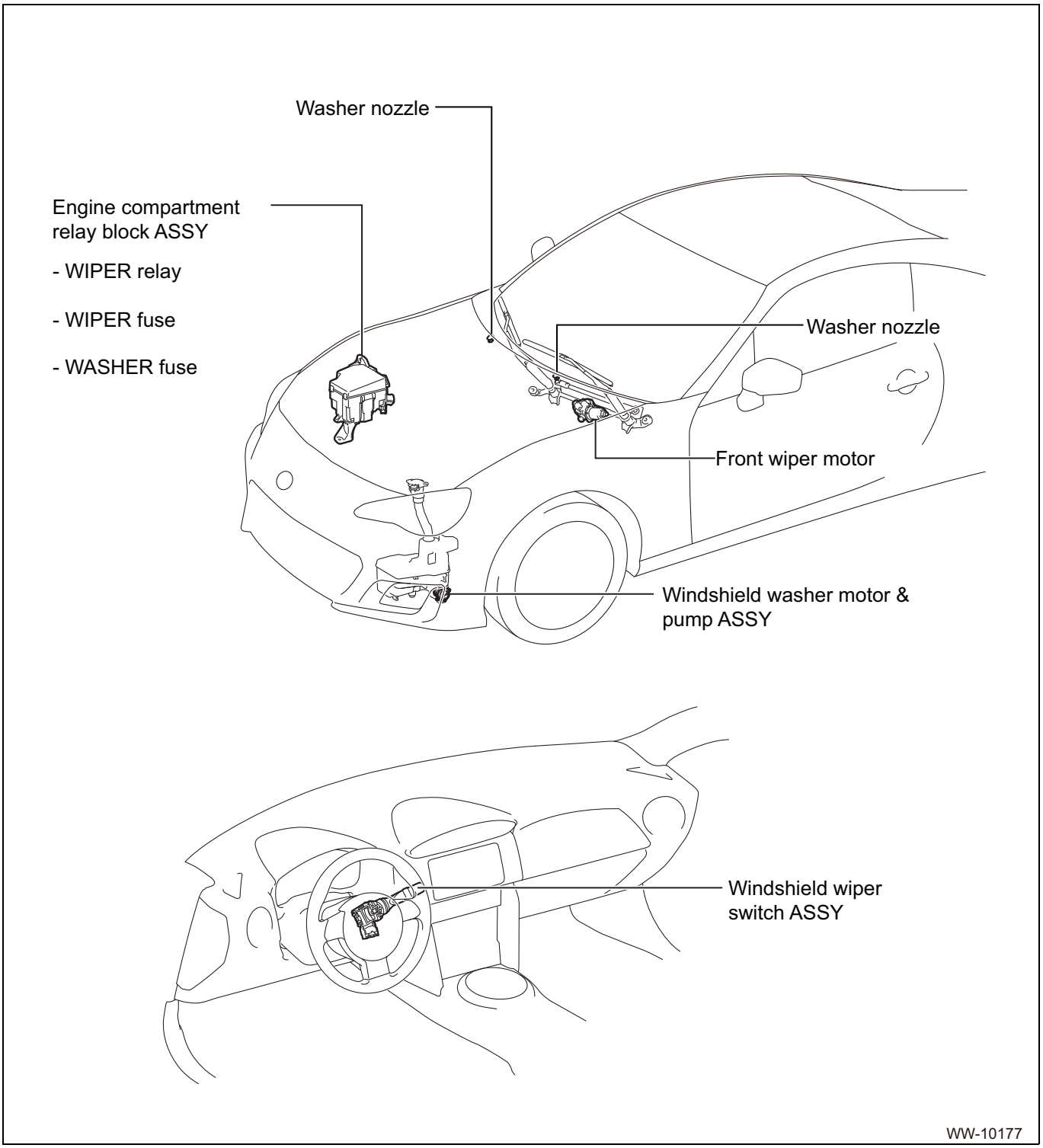

Symptom table

Front wipers & washers

Symptoms	Inspection items	Reference pages
Wipers and washers do not operate.	WIPER fuse, WASHER fuse	-
	Windshield wiper switch ASSY	WW - 25
	Vehicle wiring harness and connector	-
Wipers do not operate on LO.	Windshield wiper switch ASSY	WW - 25
	Front wiper motor	WW - 17
	Vehicle wiring harness and connector	-
Wipers do not operate on HI.	Windshield wiper switch ASSY	WW - 25
	Front wiper motor	WW - 17
	Vehicle wiring harness and connector	-
Wipers do not operate on INT.	Windshield wiper switch ASSY	WW - 25
	Windshield wiper switch ASSY (operation inspection)	WW - 24
	Front wiper motor	WW - 17
	Vehicle wiring harness and connector	-
Washer motor does not operate.	WASHER fuse	-
	Windshield wiper switch ASSY	WW - 25
	Windshield washer motor & pump ASSY	WW - 28
	Vehicle wiring harness and connector	-
When the washer switch is turned ON, and the washer fluid is sprayed, the wipers don't operate.	Windshield wiper switch ASSY	WW - 25
	Front wiper motor	WW - 17
	Vehicle wiring harness and connector	-
Washer fluid isn't sprayed.	Washer hose and nozzle	-

How to troubleshoot

1	Bring in the car

Next

2	Interview and phenomenon check

(1) Perform the interview and phenomenon check (Refer to WW - 5)

Next

3	Symptom table

(1) Check the symptom table. (Refer to WW - 3)

Result

Result	Go to
Not applicable to the symptom table.	A
Applicable to the symptom table.	B

B → Go to Step 5.

A

4	Based on the trouble phenomenon, perform troubleshooting following the steps below.

(1) On-vehicle inspection

WW

(2) Unit inspection

Next

5	Adjustment, repair, or replacement

Next

6	Confirmation test

Next

Complete

Check list for interview

Wiper & Washer Diagnosis Checklist for Interview

Year/date of vehicle bring-in: Year Month Date

Name		Registration No.		First registration	Year Month Date
		Vehicle model		Frame No.	
Interviewer		Inspector		Engine type		Odometer reading	km
Customer specified content					

Date when trouble occurred (from when)	Year Month Date Time		
Frequency of occurrence	Continuous Sometimes (times/day, times/month)		
Condition of trouble occurrence			
Weather	Fine / Cloudy / Rainy / Snowy / Other ( )	Temperature	Approx. ( ) °C
Road	Inner city / Suburbs / Highway / Others ( )		Paved road / Unpaved road

Trouble symptom		
	Wiper	
	Washer	

H

WW

Circuit figure

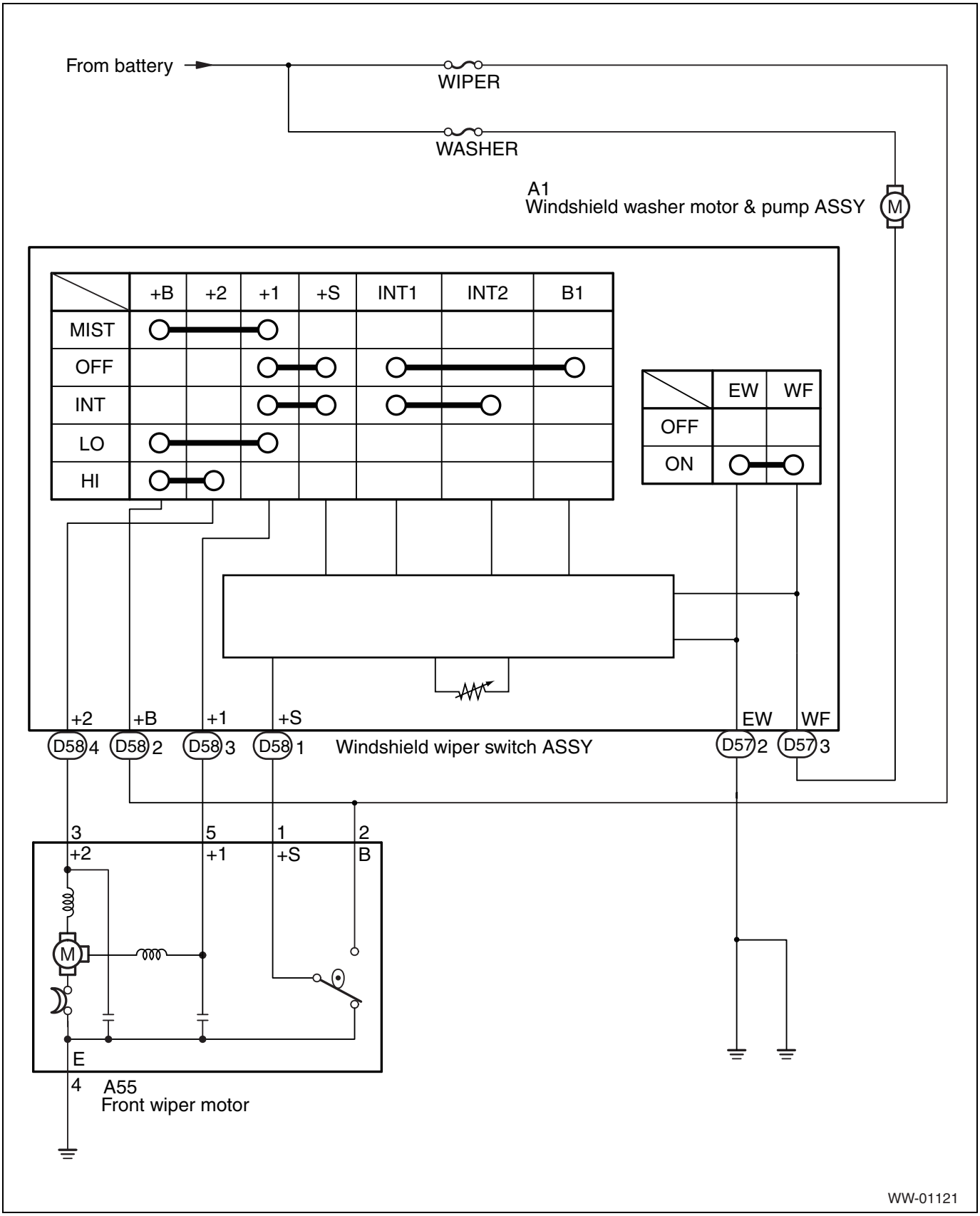

WW

Front wiper motor

Exploded view

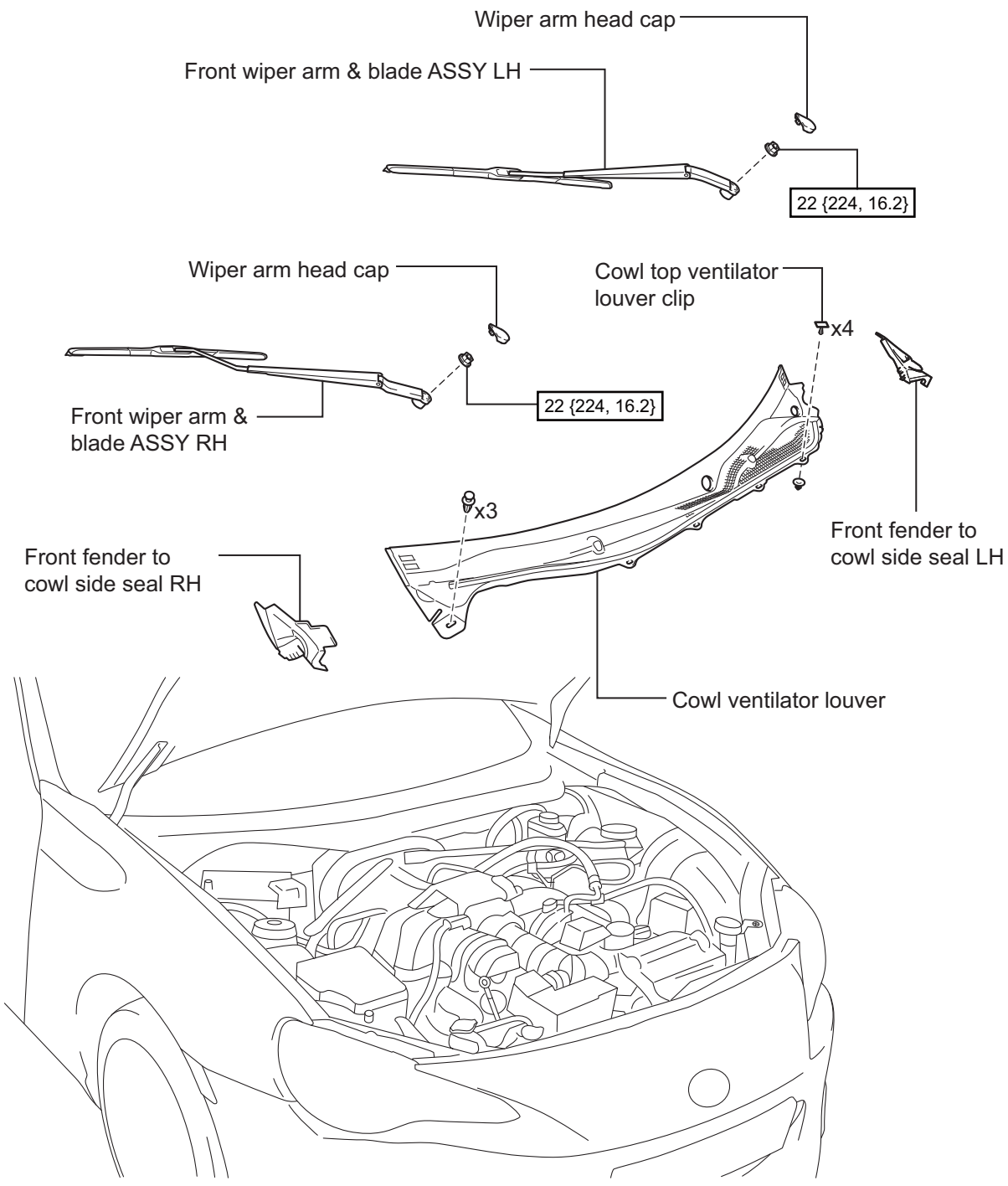

N*m {kgf*cm, ft*lbf}: Tightening torque

WW-10178

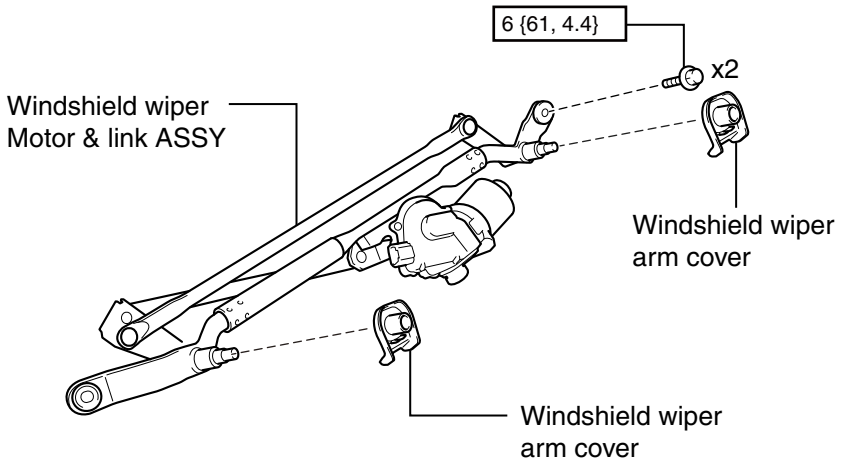

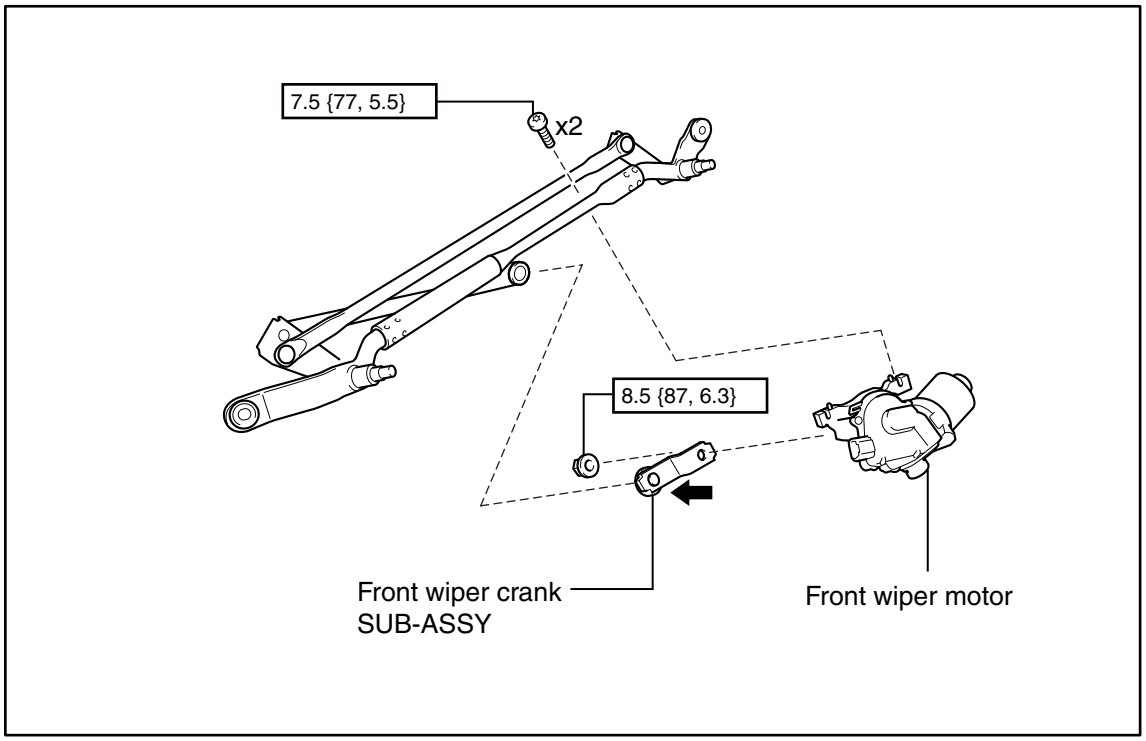

N•m {kgf•cm, ft•lbf} : Tightening torque

⬅ Multemp SA grease or equivalent

WW-01011

Removal

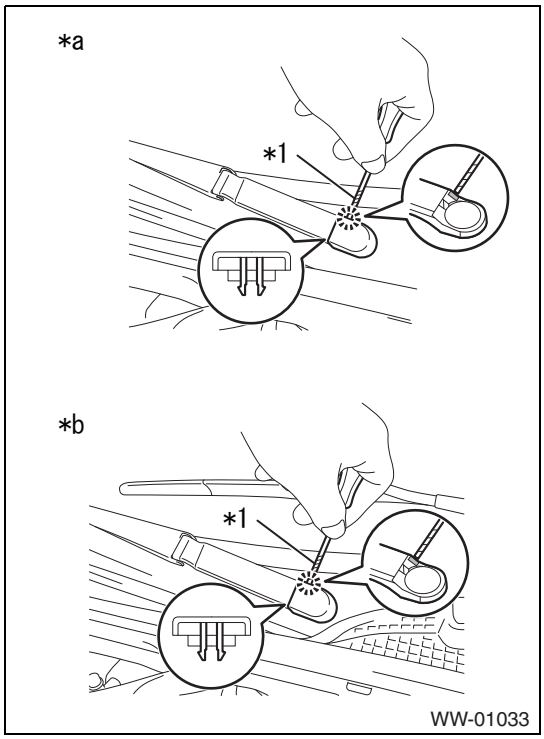

1. Removal of the wiper arm head caps
   (1) Using a thin flat tip screwdriver that is wrapped in protective tape, release the tabs and remove the 2 wiper arm head caps.

Captions in illustration

*1	Protective tape
*a	LH side
*b	RH side

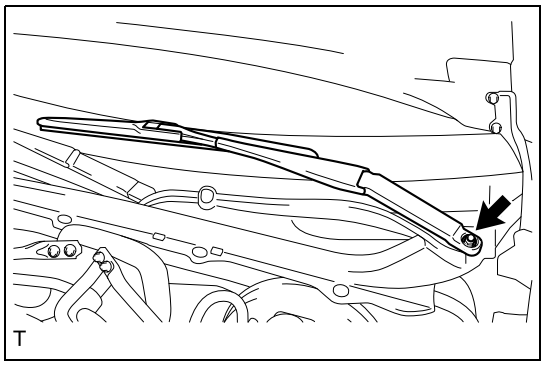

2. Removal of the front wiper arm & blade ASSY LH
   (1) Remove the nut and remove the front wiper arm & blade ASSY LH.

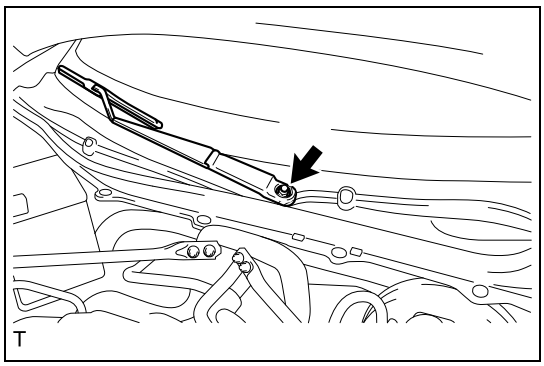

3. Removal of the front wiper arm & blade ASSY RH
   (1) Remove the nut and remove the front wiper arm & blade ASSY RH.

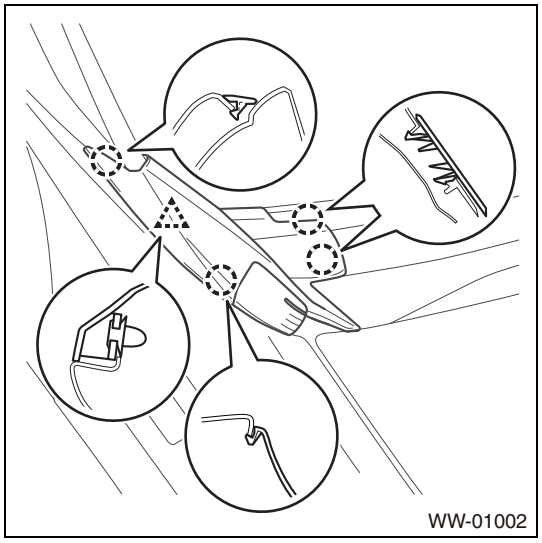

4. Removal of the front fender to cowl side seal RH
   (1) Release the 3 tabs.
   (2) Remove the clip and remove the front fender to cowl side seal RH.
5. Removal of the front fender to cowl side seal LH
   NOTE:
   Perform the same procedures as RH side.
6. Removal of the cowl ventilator louver
   CAUTION:
   Before removing the cowl ventilator louver, use an air blower and a nylon brush to clean the gravel of the front, lower area of the glass.
   (1) Using a clip remover, remove the 3 clips.
   (2) While pressing the tabs, remove the 4 cowl top ventilator louver clips.
      CAUTION:
      Be careful not to pull the cowl top ventilator louver clips with excessive force, as this may damage the clips.

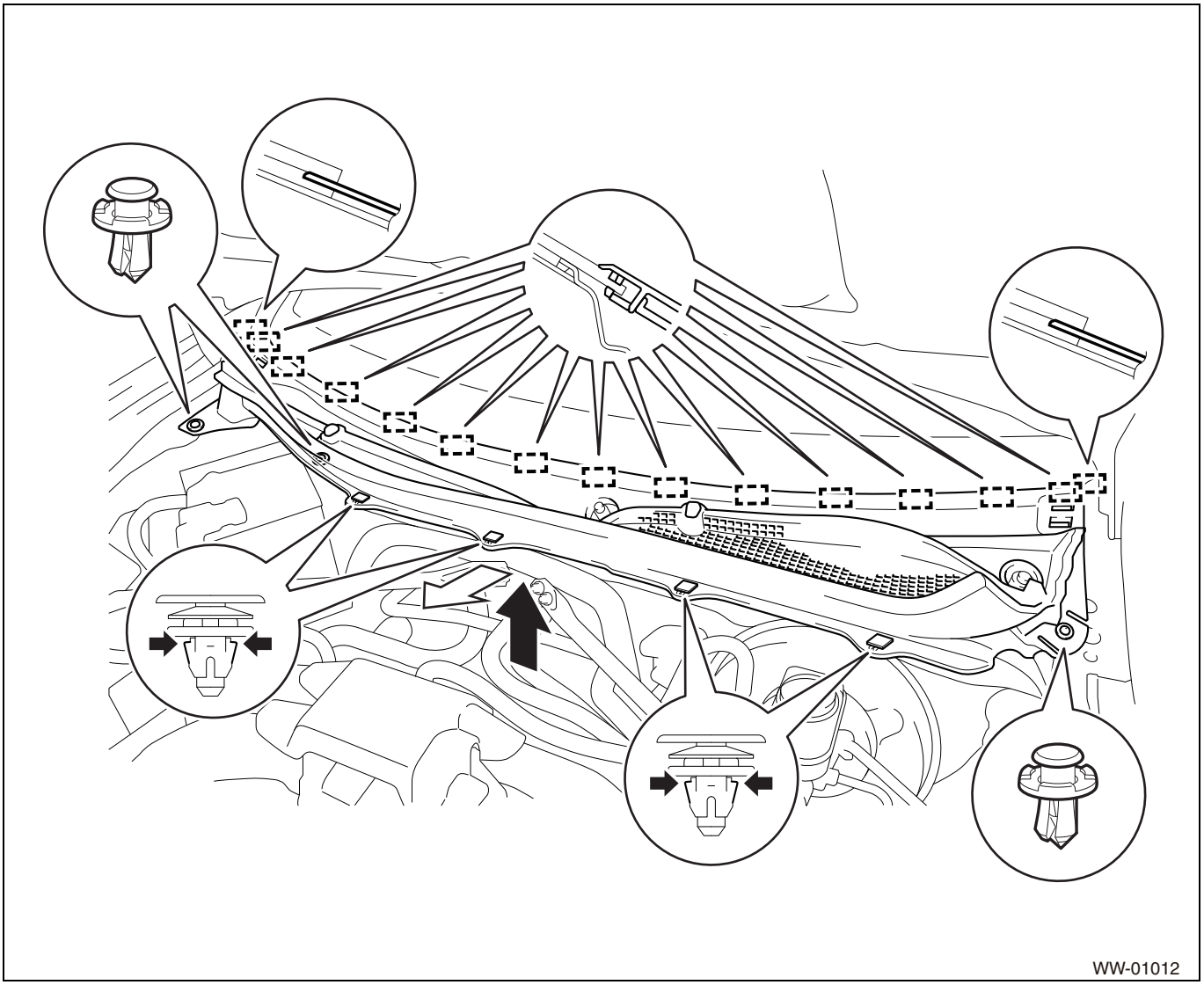

(3) Release the 15 guides as in the figure, and remove the cowl ventilator louver.

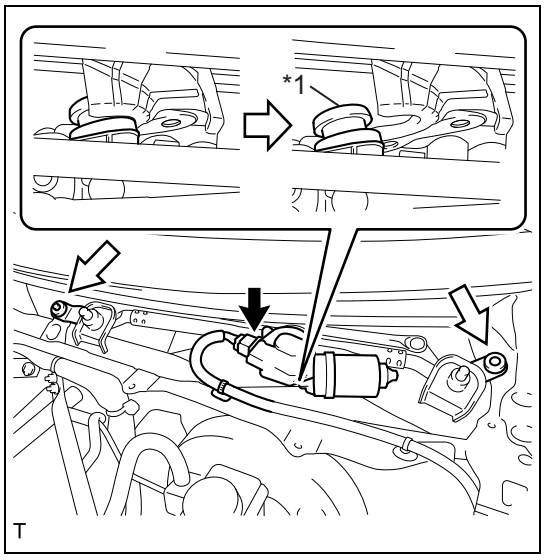

7. Removal of the windshield wiper motor & link ASSY
   (1) Disconnect the front wiper motor connector.
      (a)Remove the 2 bolts.
      (b)As in the figure, release the grommet of the front wiper motor from the body, and remove the windshield wiper motor & link ASSY.

Captions in illustration

*1	Grommet

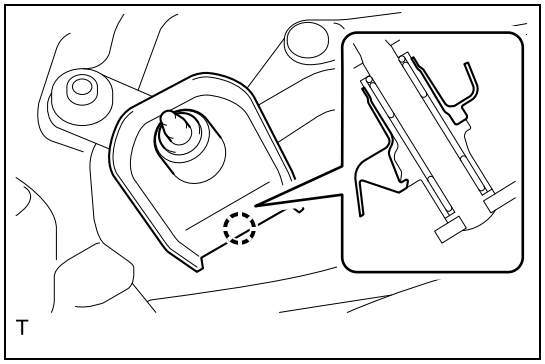

8. Removal of the windshield wiper arm covers
   (1) Release the tabs and remove the 2 windshield wiper arm covers.

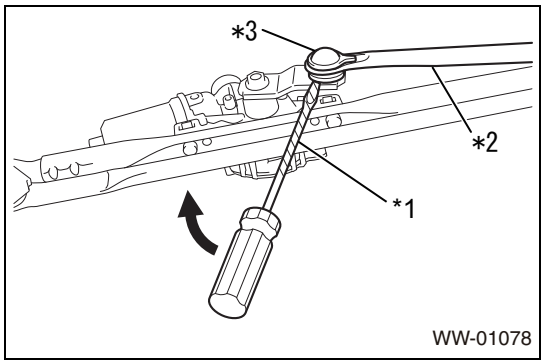

9. Removal of the front wiper crank SUB-ASSY
   (1) Using a flat tip screwdriver that is wrapped in protective tape, as in the figure, disconnect the No. 1 rod from the crank arm pivot of the front wiper crank SUB-ASSY.

Captions in illustration

*1	Protective tape
*2	No. 1 rod
*3	Crank arm pivot

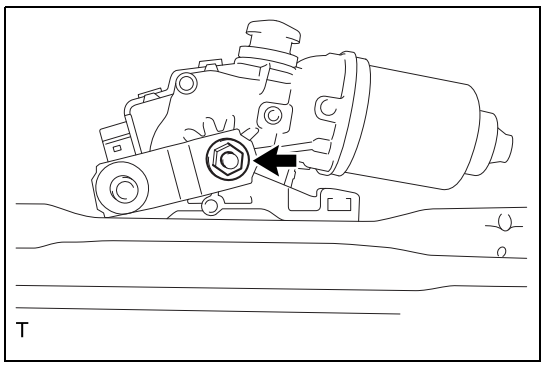

   (2) Remove the nut and remove front wiper crank SUB-ASSY.

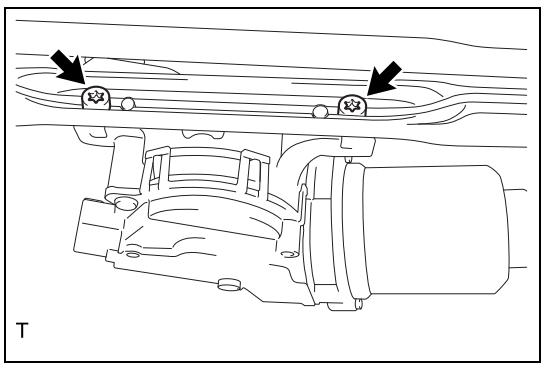

10. Removal of the front wiper motor
    (1) Using a T30 Torx socket wrench, remove the 2 Torx bolts, and remove the front wiper motor from the windshield wiper link ASSY.

WW

Installation

1. Installation of the front wiper motor
   (1) Using a T30 Torx socket wrench and 2 bolts, install the front wiper motor on the windshield wiper link ASSY.
   Standard value:T=7.5N·m {77kgf·cm} {5.5ft·lbf}
2. Installation of the front wiper crank SUB-ASSY
   (1) Connect the front wiper motor connector.
   (2) Turn the ignition switch to ON.
   (3) Activate the wiper switch, and stop the front wiper motor in the automatic stop position.
   (4) Turn the ignition switch to OFF.
   (5) Disconnect the front wiper motor connector.

(6) Using the nut, temporarily install the front wiper crank SUB-ASSY on the front wiper motor.

(7) Temporarily place the No. 1 rod on the crank arm pivot of the front wiper crank SUB-ASSY.

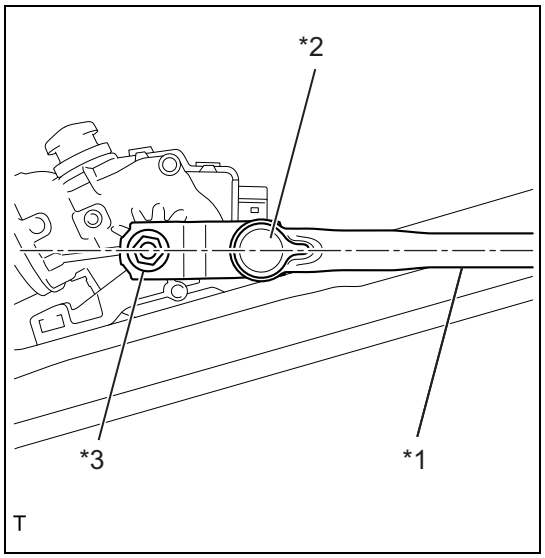

(8) As in the figure, directly align the nut of the front wiper crank SUB-ASSY and the crank arm pivot with the No. 1 rod.

Captions in illustration

*1	No. 1 rod
*2	Crank arm pivot
*3	Nut

(9) Tighten the nut completely.
Standard value:T=8.5N·m {87kgf·cm} {6.3ft·lbf}

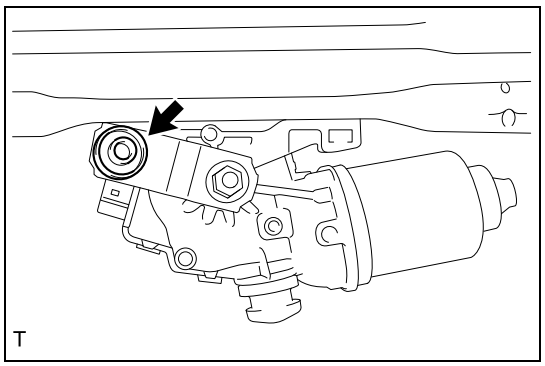

(10) Apply Multemp SA grease or the equivalent to the crank arm pivot of the front wiper crank SUB-ASSY.

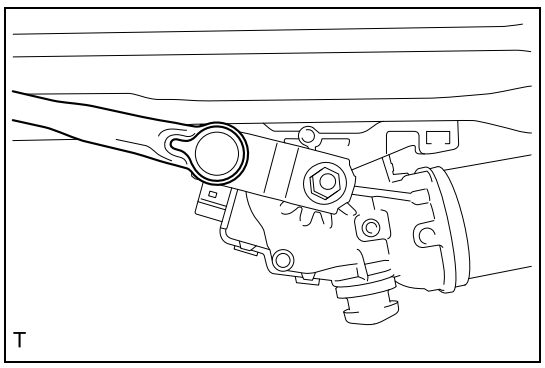

(11) Connect the No. 1 rod to the crank arm pivot of the front wiper crank SUB-ASSY.

3. Installation of the windshield wiper arm cover

(1) Fit in the tabs and install the 2 windshield wiper arm covers.

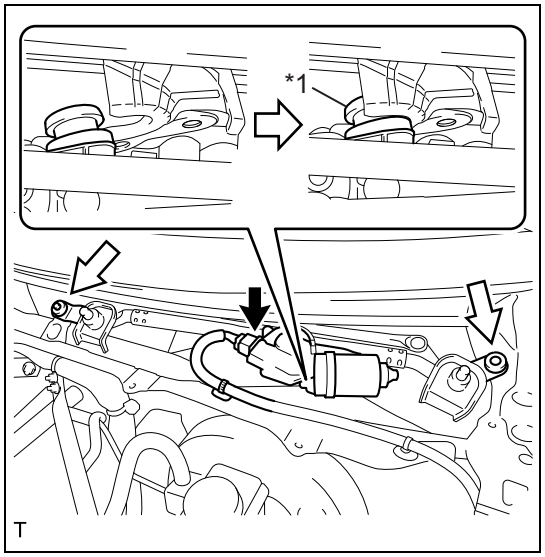

4. Installation of the windshield wiper motor & link ASSY
   (1) As shown in the figure, fit the grommet of the front wiper motor in the body, and assemble the windshield wiper motor & link ASSY.
   (2) Using 2 bolts, install the windshield wiper motor & link ASSY.
   Standard value:T=6.0N·m {61kgf·cm} {4.4ft·lbf}
   (3) Connect the connector.

Captions in illustration

*1	Grommet

5. Installation of the cowl ventilator louver
   CAUTION:
   Before installing, check that there is no gravel on the installation sections of the windshield glass and the cowl ventilator louver.
   (1) Install in the direction of the arrow in the figure, and fit in the 15 guides.
   (2) Install the 4 cowl top ventilator louver clips on the cowl ventilator louver.
   (3) Using 3 clips, install the cowl ventilator louver.

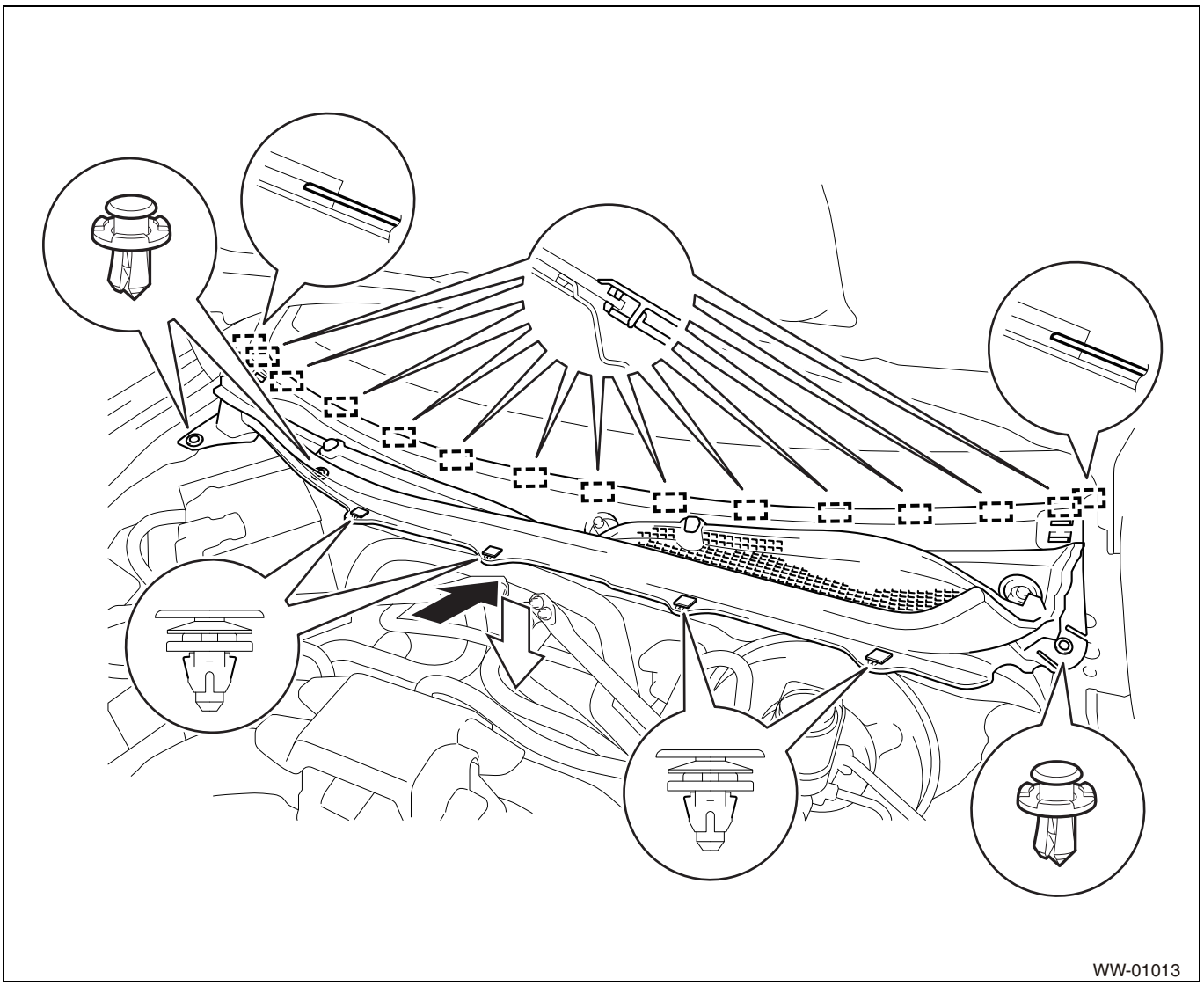

WW

6. Installation of the front fender to cowl side seal RH
   (1) Fit in the 3 tabs and, using clips, install the front fender to cowl side seal RH.
7. Installation of the front fender to cowl side seal LH
   NOTE:
   Perform the same procedures as RH side.

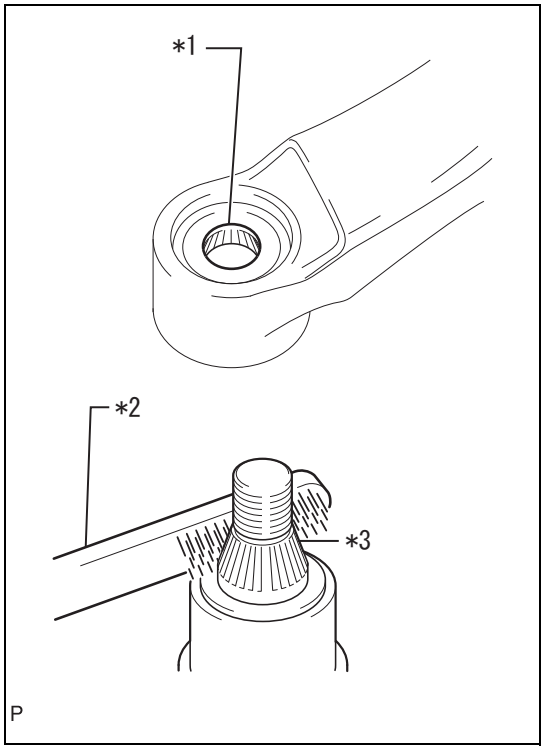

8. Installation of the front wiper arm & blade ASSY RH
   (1) Stop the front wiper motor in the automatic stop position.
   (2) During re-assembly:
   (a)Use a round file to clean the wiper arm serration section.

Captions in illustration

*1	Wiper arm serration section
*2	Wire brush
*3	Wiper pivot serration section

   (3) Using a wire brush, clean the wiper pivot serration section.

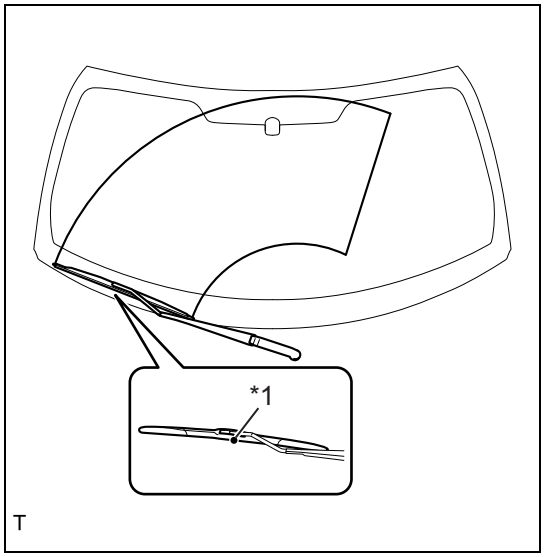

   (4) Use a nut to install the front wiper arm & blade ASSY RH so that it matches the position in the figure.
   Standard value:T=22N·m {224kgf·cm} {16.2ft·lbf}
   NOTE:
   While pressing on the arm hinge with your hand, tighten the nut.

Captions in illustration

*1	Ceramic dot

9. Installation of the front wiper arm & blade ASSY LH

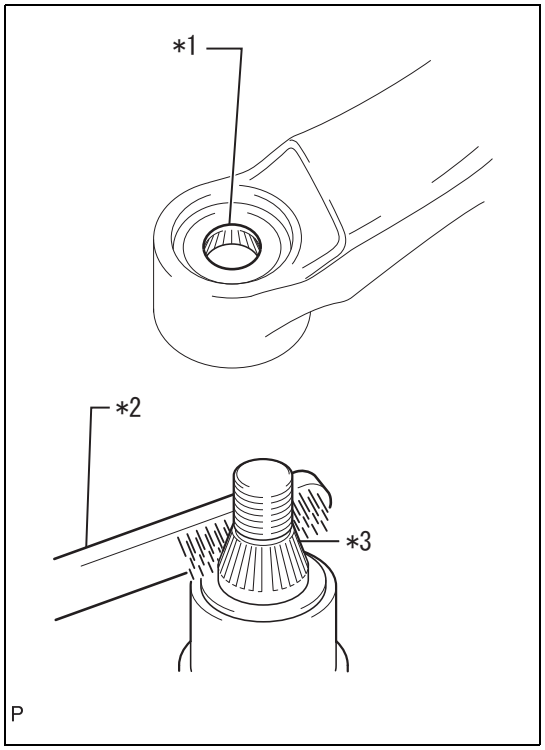

(1) During re-assembly:
(a)Use a round file to clean the wiper arm serration section.

Captions in illustration

*1	Wiper arm serration section
*2	Wire brush
*3	Wiper pivot serration section

(2) Using a wire brush, clean the wiper pivot serration section.

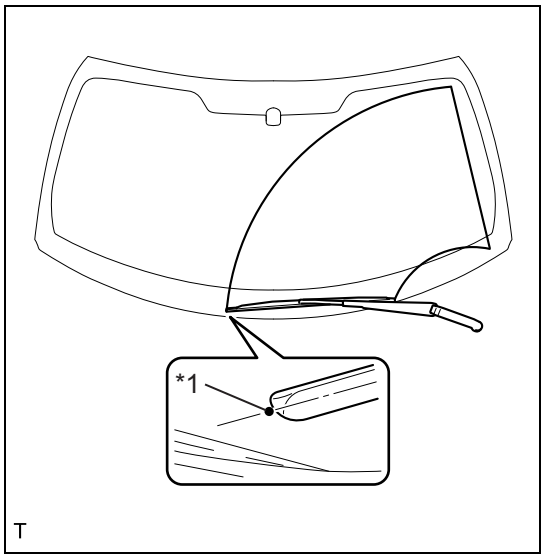

(3) Use a nut to install the front wiper arm & blade ASSY LH so that it matches the position in the figure.
Standard value:T=22N·m {224kgf·cm} {16.2ft·lbf}
NOTE:
While pressing on the arm hinge with your hand, tighten the nut.

Captions in illustration

*1	Ceramic dot

(4) While spraying water or washer fluid on the glass, activate the front wipers, and check that the blades wipe properly and don't interfere with the body.

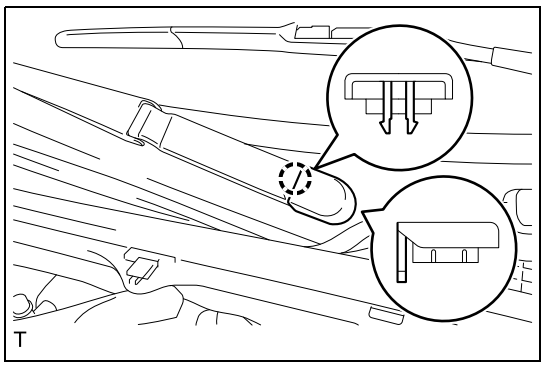

10. Installation of the wiper arm head caps
(1) Fit in the tabs and install the 2 wiper arm head caps.

On-vehicle inspection

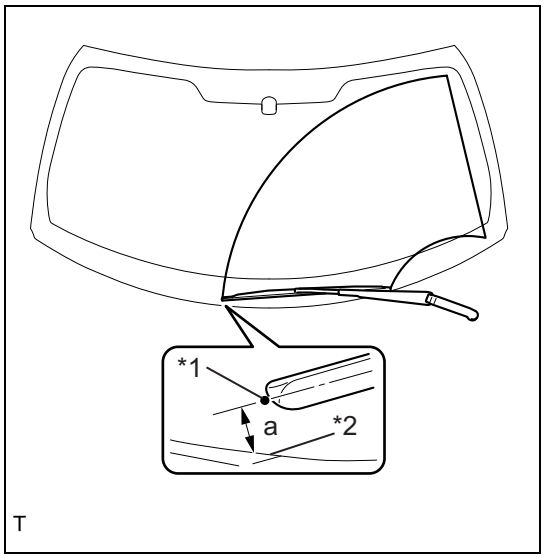

1. Inspection of the front wiper motor ASSY
   (1) Inspection of the automatic stopping position (LH side)
      (a) Operate the front wiper motor ASSY, and then stop it and check the automatic stopping position of the wiper arm.
      NOTE:
      Lift 2 times after stopping, then inspect.
      Criteria: The wiper arm stops in the position shown in the figure.

Captions in illustration

*1	Ceramic dot
*2	Cowl panel edge

Standard value

Measurement place	Standard value
a	35.0mm {1.378in}

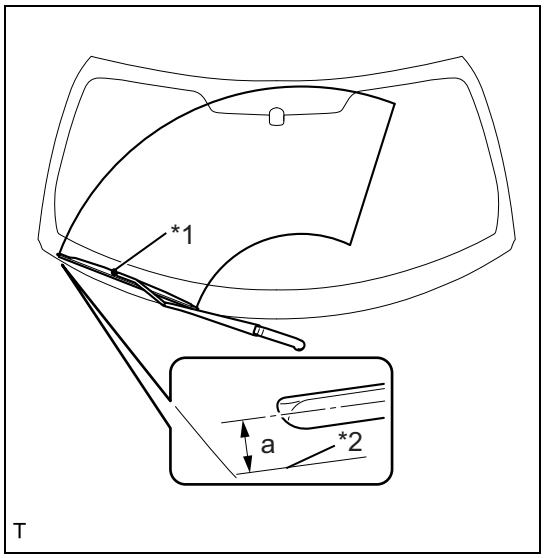

   (2) Inspection of the automatic stopping position (RH side)
      (a) Operate the front wiper motor ASSY, and then stop it and check the automatic stopping position of the wiper arm.
      NOTE:
      Lift 2 times after stopping, then inspect.
      Criteria: The wiper arm stops in the position shown in the figure.

Captions in illustration

*1	Ceramic dot
*2	Cowl panel edge

Standard value

Measurement place	Standard value
a	33.0mm {1.299in}

Unit inspection

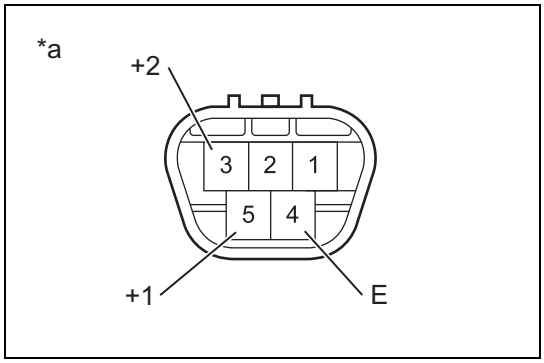

1. Inspection of the front wiper motor ASSY
   (1) LO operation inspection
      (a) Inspect the front wiper motor ASSY operation when battery voltage is applied to each connector terminal.

Criteria

Battery connection	Criteria
Battery positive →5 (+1) Battery ground →4 (E)	Operates at low speed (LO)

   (2) HI operation inspection
      (a) Inspect the front wiper motor ASSY operation when battery voltage is applied to each connector terminal.

Criteria

Battery connection	Criteria
Battery positive →3 (+2) Battery ground →4 (E)	Operates at high speed (HI)

Captions in illustration

*a	Connector not connected (Front wiper motor ASSY)

WW

Front wiper rubber

Exploded view

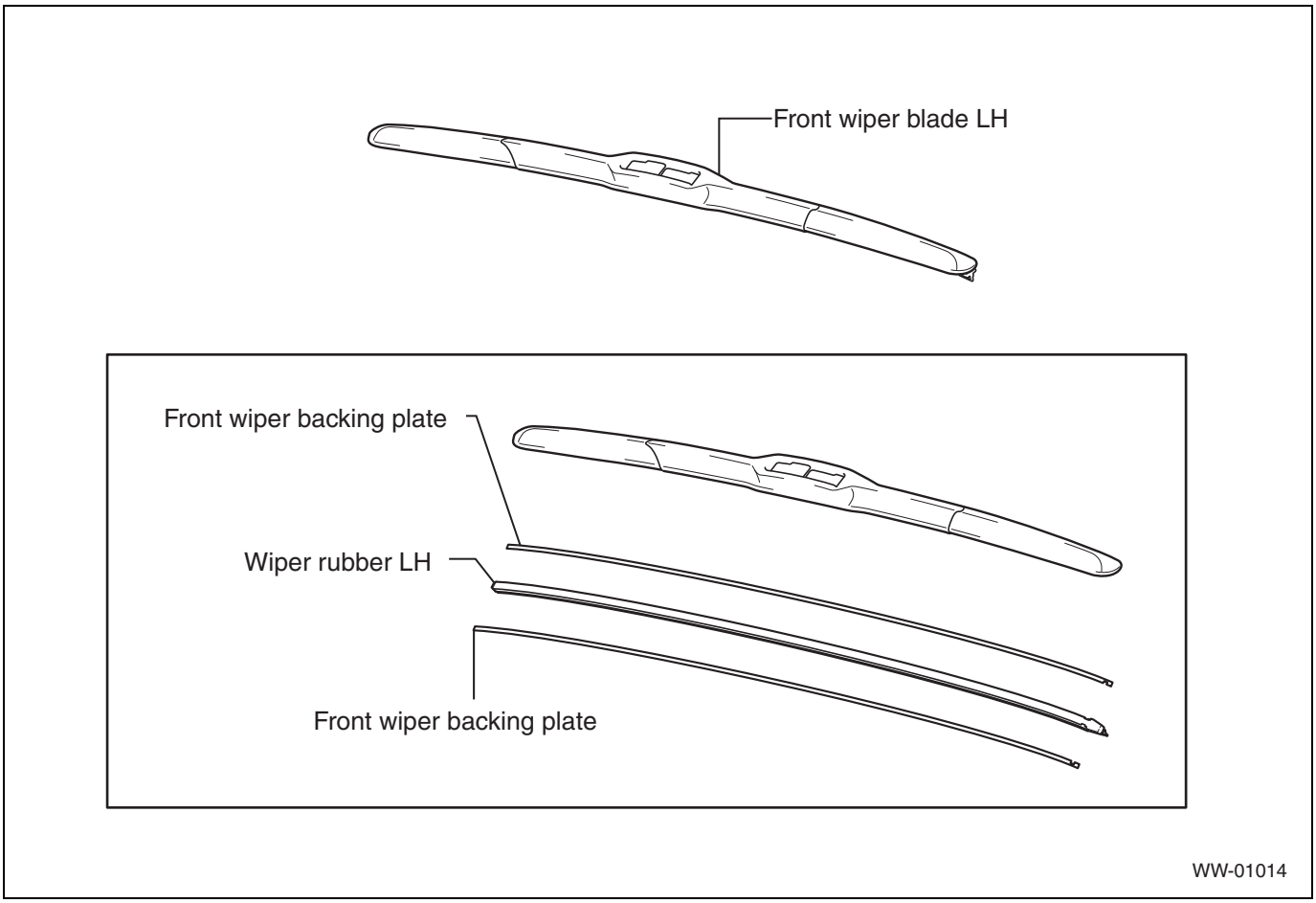

Replacement

NOTE:

The following procedure is for LH side. Perform the same procedures for the RH and LH side.

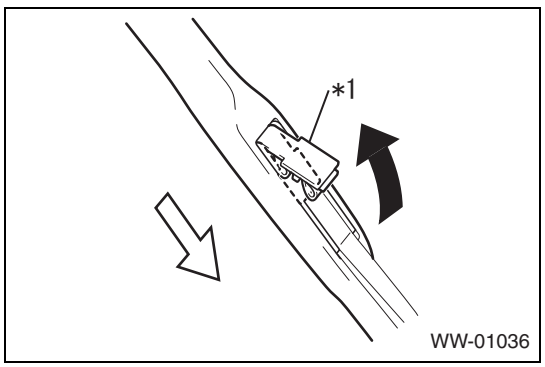

1. Removal of the front wiper blade LH
   (1) Remove the front wiper blade LH holder.
   (2) As in the figure, remove the front wiper blade LH from the front wiper arm LH.
   CAUTION:
   To avoid damaging the windshield glass, place a cloth between the windshield glass and the front wiper arm LH.

*1	Holder

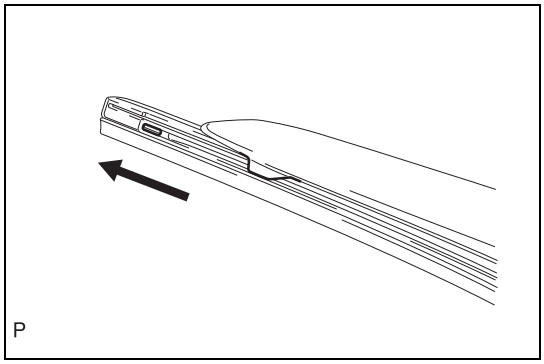

2. Removal of the wiper rubber LH
   (1) Remove the wiper rubber LH as a unit with the front wiper backing plates from the front wiper blade LH.
   NOTE:
   Pull from the head of the wiper rubber LH (the part with a bulge) and remove it.

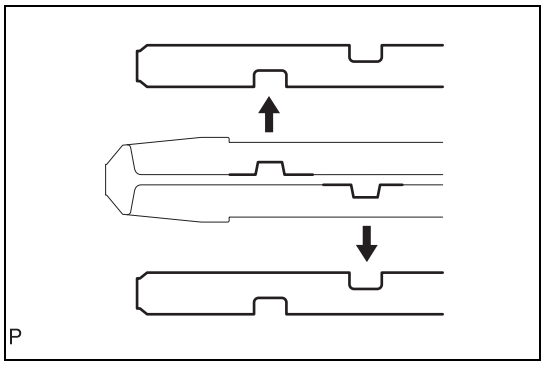

   (2) Remove the wiper rubber LH from the front wiper backing plates.

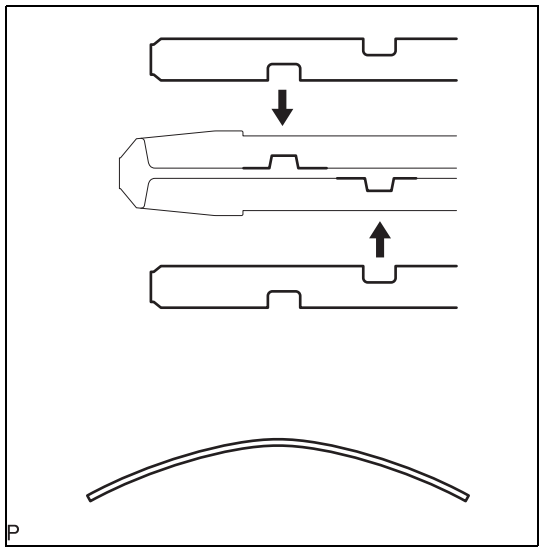

3. Installation of the wiper rubber LH
   (1) Install the front wiper backing plates on the wiper rubber LH.
   CAUTION:
   - Align the recesses of the wiper rubber backing plates with the protruding parts of the wiper rubber LH.
   - Put the R direction of the wiper rubber backing plates in the same direction as the R direction of the windshield glass.

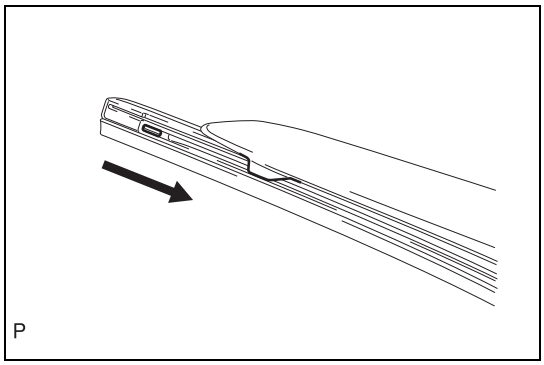

   (2) Install the wiper rubber LH as a unit with the front wiper backing plates on the front wiper blade LH.
   CAUTION:
   Push the wiper rubber LH strongly into the blade fitting area, and fit completely into the recess of the wiper rubber edge.
   NOTE:
   Install it on the front wiper blade LH so that the head of the wiper rubber LH (the part with a bulge) faces the arm axle side.

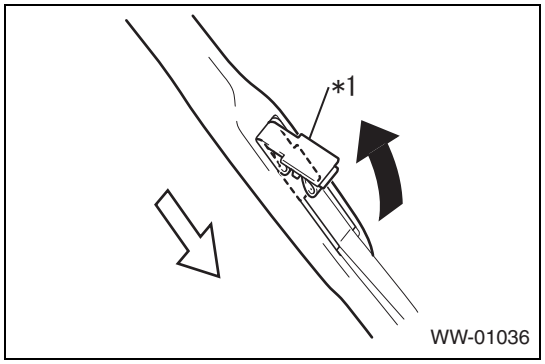

4. Installation of the front wiper blade LH
   (1) As in the figure, install the front wiper blade LH on the front wiper arm LH.
   (2) Install the holder of the front wiper blade LH.

*1	Holder

Wiper switch

Exploded view

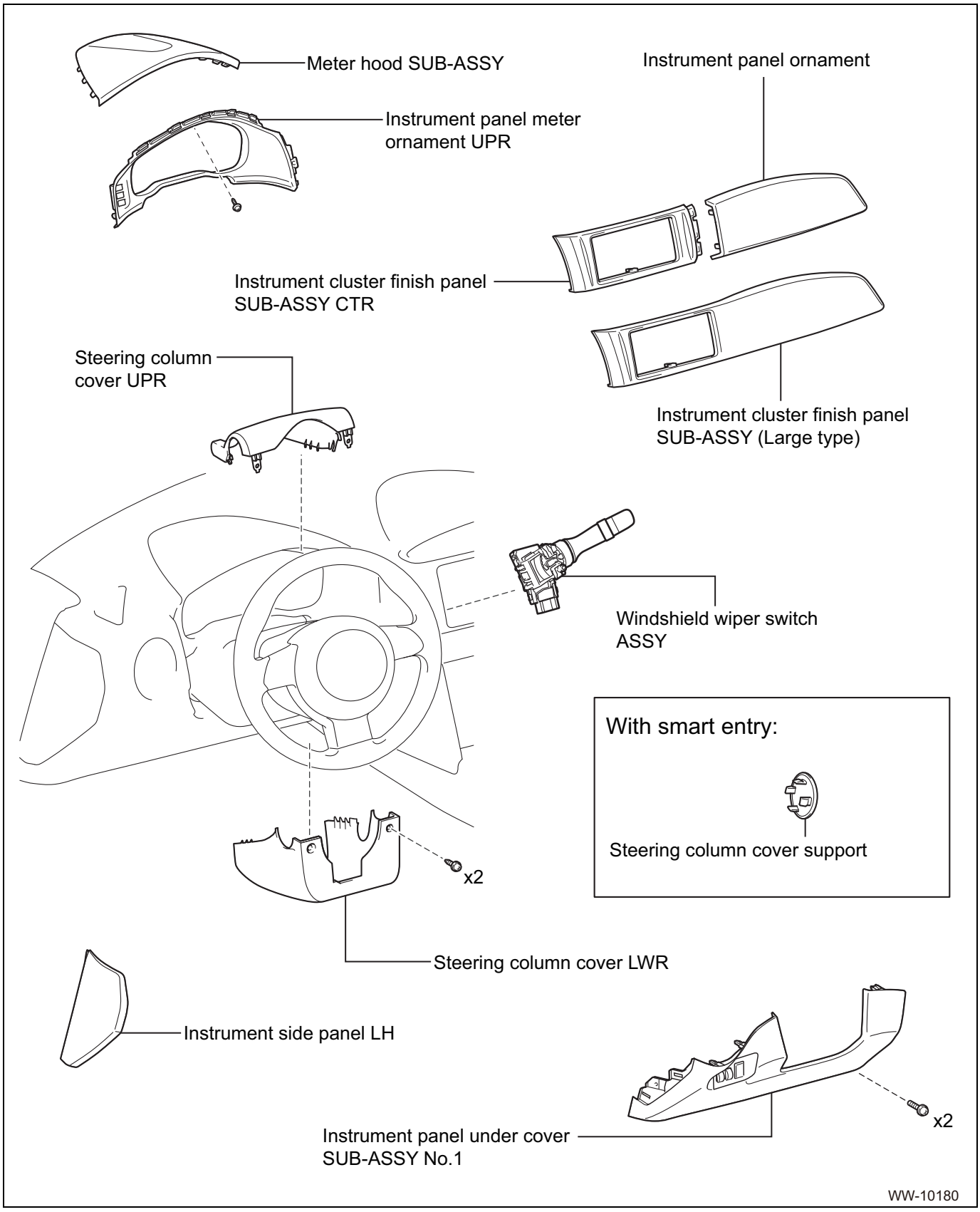

Removal

1. Removal of the instrument side panel LH (Refer to IT - 24)

2. Removal of the instrument cluster finish panel SUB-ASSY CTR (Refer to IT - 23)
3. Removal of the meter hood SUB-ASSY (Refer to IT - 24)
4. Removal of the instrument panel meter ornament UPR (Refer to IT - 24)
5. Removal of the instrument panel under cover SUB-ASSY No. 1 (Refer to ME - 68)

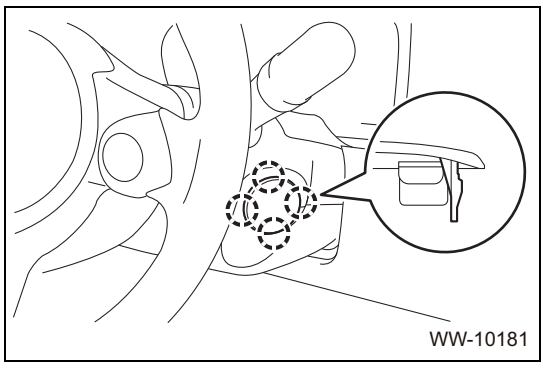

6. Removal of the steering column cover support (when there is smart entry)
   (1) Release the 4 tabs and remove the steering column cover support.

7. Removal of the steering column cover LWR
   (1) Free the tilt lever.

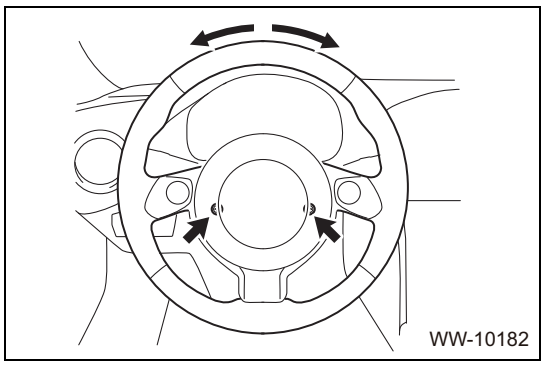

   (2) Turn the steering wheel left and right, and remove the 2 screws.

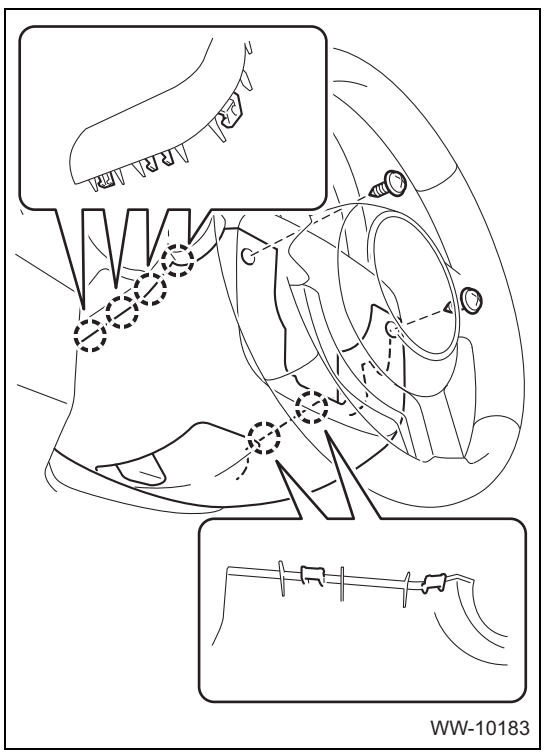

   (3) Press on the steering column cover LWR from the left and right sides, release the 6 tabs, and remove the steering column cover LWR.

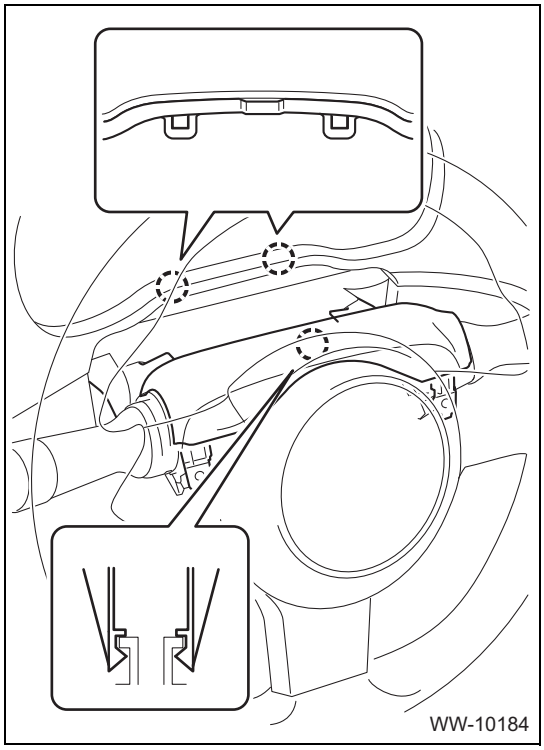

8. Removal of the steering column cover UPR
   (1) Release the tabs and remove the steering column cover UPR.

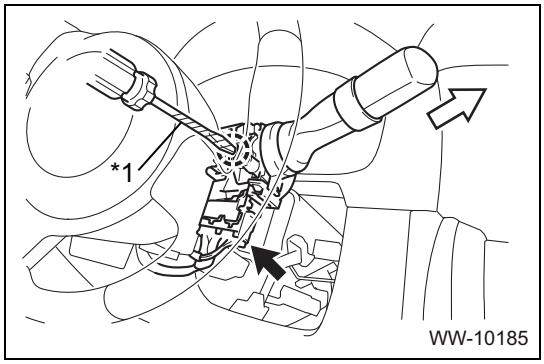

9. Removal of the windshield wiper switch ASSY
   (1) Disconnect each connector.
   (2) Using a flat tip screwdriver that is wrapped in protective tape, release the tab and remove the windshield wiper switch ASSY in the direction of the arrow in the figure.
   CAUTION:
   Pressing strongly may damage the tab.

Captions in illustration

*1	Protective tape

Installation

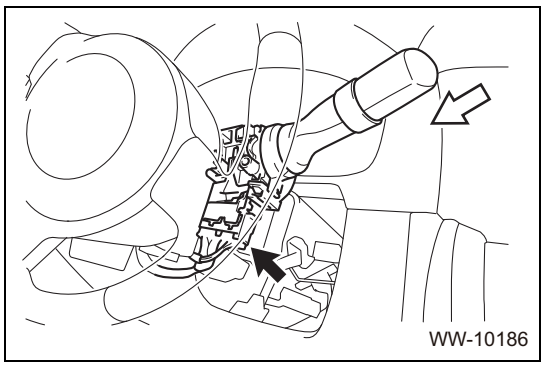

1. Installation of the windshield wiper switch ASSY
   (1) Fit in the tab and install the windshield wiper switch ASSY in the direction of the arrow in the figure.
   (2) Connect each connector.
2. Installation of the steering column cover UPR
   (1) Fit in the tabs and install the steering column cover UPR on the steering column ASSY.
3. Installation of the steering column cover LWR
   (1) Fit in the 6 tabs and install the steering column cover LWR.
   (2) Turn the steering wheel left and right, and using 2 screws, secure the steering column cover LWR.
4. Installation of the steering column cover support (when there is smart entry)
   (1) Fit in the 4 tabs and install the steering column cover support.
5. Installation of the instrument panel meter ornament UPR (Refer to IT - 29)
6. Installation of the meter hood SUB-ASSY (Refer to IT - 29)

7. Installation of the instrument cluster finish panel SUB-ASSY CTR (Refer to IT - 29)
8. Installation of the instrument panel under cover SUB-ASSY No.1 (Refer to ME - 69)
9. Installation of the instrument side panel LH (Refer to IT - 29)

On-vehicle inspection

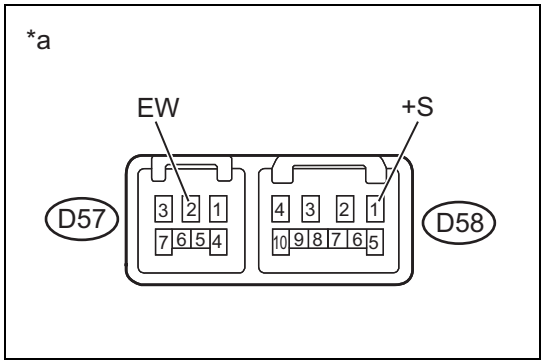

1. Inspection of the windshield wiper switch ASSY
   (1) Intermittent operation inspection (front wiper)

Captions in illustration

*a	Connector not connected (Windshield wiper switch ASSY)

(a) Turn the ignition switch to ON, and turn the windshield wiper switch ASSY to INT.

(b) Inspect the voltage between terminal D58-1 (+S) and terminal D57-2 (EW) when intermittent wiper relay is operated.

NOTE:

Inspect from behind the connectors once they have been connected.

Criteria: Shown in the figure

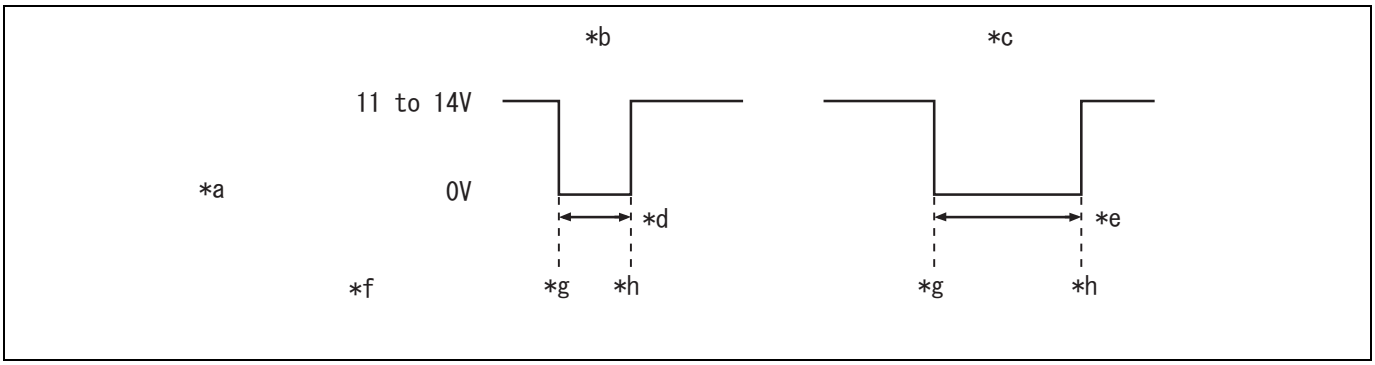

Captions in illustration

*a	Voltage between terminals D58-1 (+S) ←→D57-2 (EW)	*b	FAST
*c	SLOW	*d	1.6±1 second
*e	16±6 seconds	*f	Wiper operation
*g	Stop	*h	Start

(2) Operation inspection (front washer)

(a) Turn the ignition switch to ON, and turn the windshield wiper switch ASSY to OFF.

(b) Using a tester, connect the tester's positive terminal to the connector's D57-3 (WF) terminal, and the tester's ground terminal to the D57-2 (EW) terminal, and inspect the voltage between the D57-3 (WF) terminal and the D57-2 (EW) terminal when the washer switch is ON and OFF.

NOTE:

Inspect from behind the connectors once they have been connected.

Criteria: Shown in the figure

WW

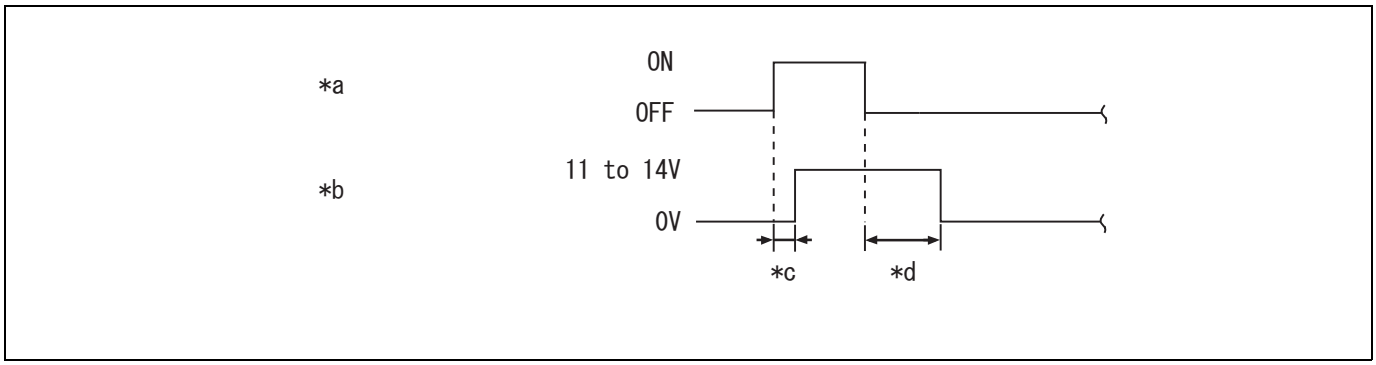

Captions in illustration

*a	Washer switch	*b	Voltage between terminals D57-1 (WF) ←→D57-2 (EW)
*c	Approx. 0.05 seconds	*d	Approx. 2.2 seconds

Unit inspection

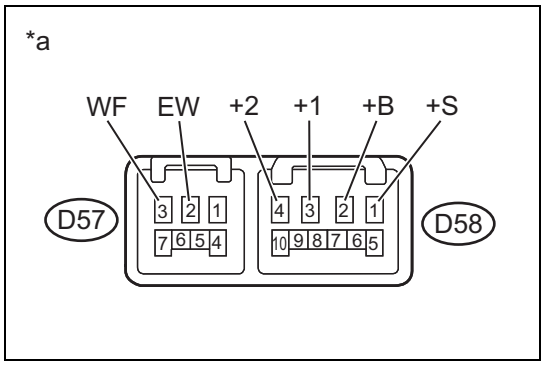

1. Inspection of the windshield wiper switch ASSY
   (1) Measurement of the resistance
      (a)Measure the resistance between connector terminals.
         Resistance

Front wiper switch

Inspection terminals (Terminal symbol)	Inspection conditions (switch over)	Standard value
D58-3 (+1) - D58-2 (+B)	MIST	Less than 1 Ω
D58-3 (+1) - D58-1 (+S)	OFF	
D58-3 (+1) - D58-1 (+S)	INT	
D58-3 (+1) - D58-2 (+B)	LO	
D58-4 (+2) - D58-2 (+B)	HI	

Front washer switch

Inspection terminals (Terminal symbol)	Inspection conditions (switch over)	Standard value
D57-3 (WF) - D57-2 (EW)	OFF	10 kΩ or more
	ON	Less than 1 Ω

Captions in illustration

*a	Connector not connected (Windshield wiper switch ASSY)

Washer motor

Exploded view

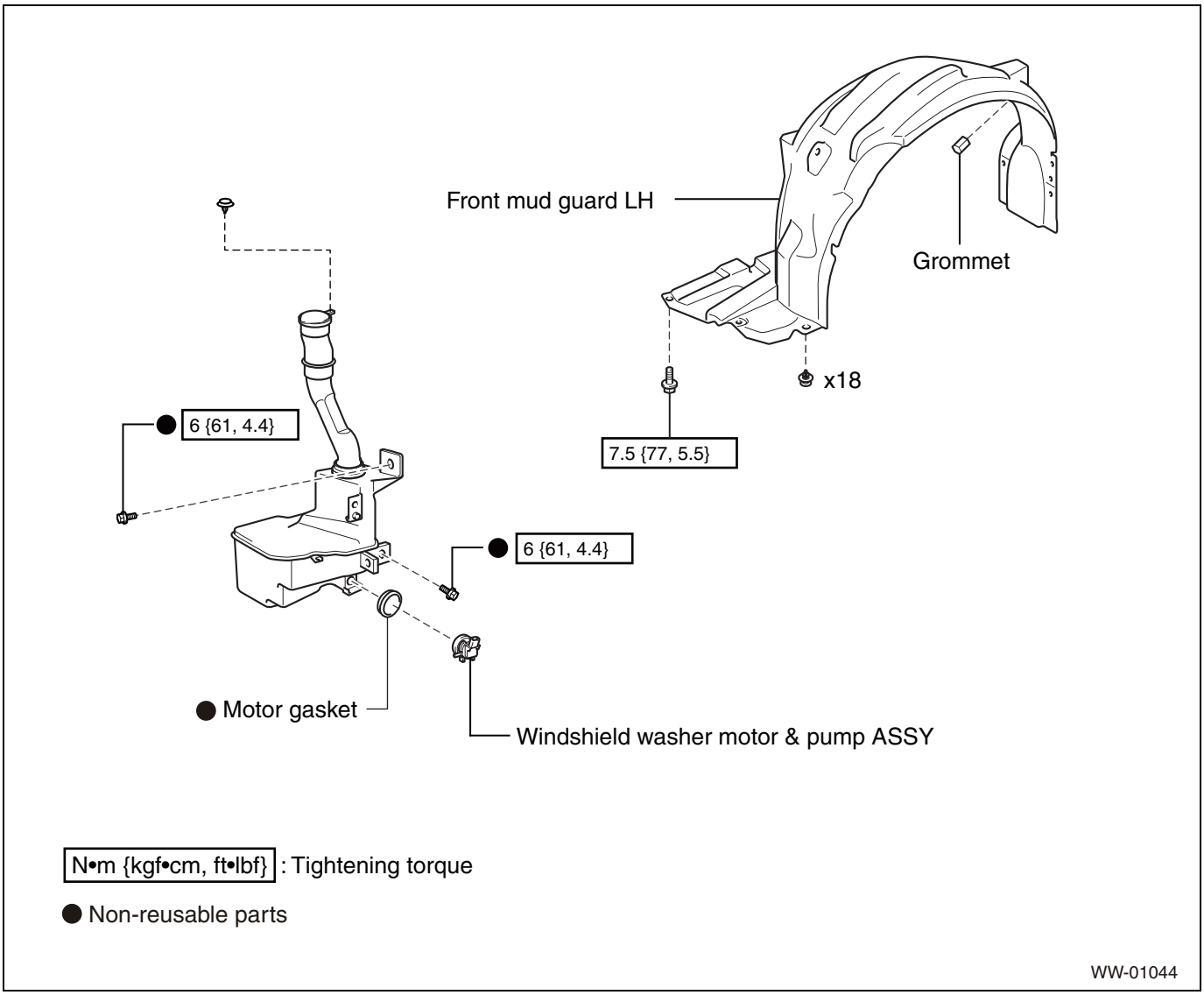

Removal

1. Removal of the front tire LH
2. Removal of the front mud guard LH
   (1) Remove the bolt.

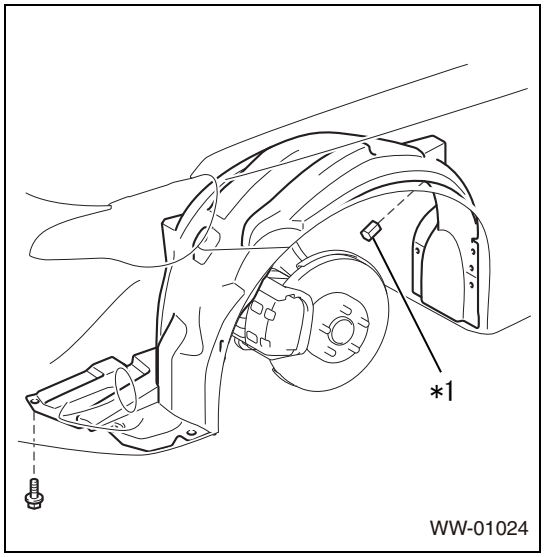

(2) Remove the grommet.

*1	Grommet

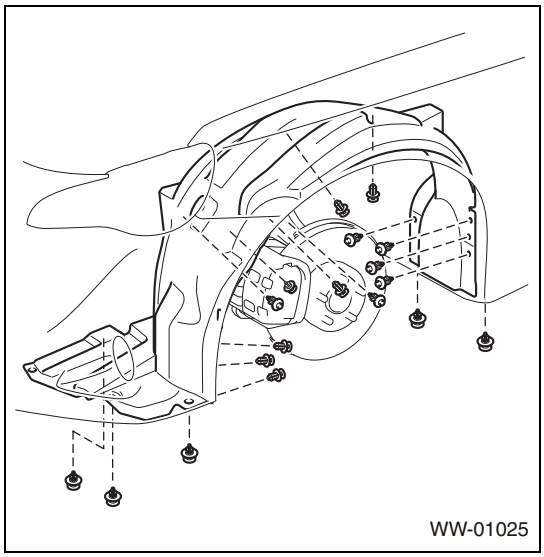

(3) Using a clip remover, remove the 18 clips and remove front mud guard LH.

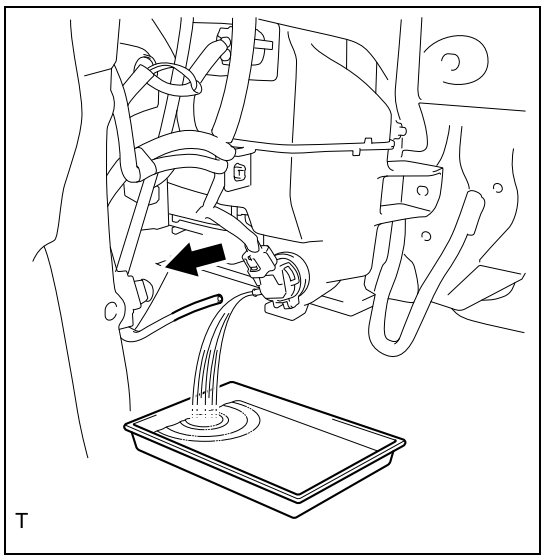

3. Draining of the washer fluid
   (1) Disconnect the washer hose and drain the washer fluid.
   NOTE:
   Prepare a receptacle beforehand.

WW

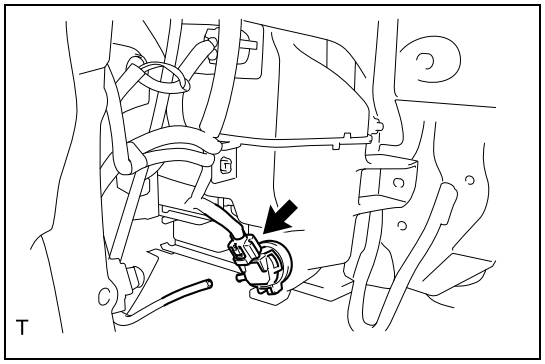

4. Removal of the windshield washer motor & pump ASSY
   (1) Disconnect the connector.
   (2) Remove the windshield washer motor & pump ASSY.

Installation

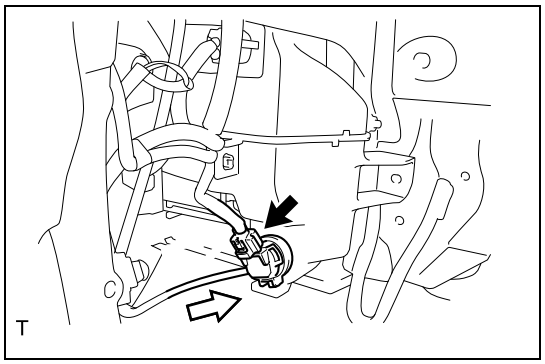

1. Installation of the windshield washer motor & pump ASSY
   (1) Install the windshield washer motor & pump ASSY.
   (2) Connect the connector.
   (3) Connect the washer hose.

2. Refilling washer fluid
   (1) Refill the washer fluid.
3. Installation of the front mud guard LH
   (1) Using 18 clips, install the front mud guard LH.
   (2) Install a new grommet.
   (3) Install the bolt.
   Standard value:T=7.5N·m {77kgf·cm} {5.5ft·lbf}
4. Installation of the front tire LH
   Standard value:T=120N·m {1224kgf·cm} {88.5ft·lbf}

On-vehicle inspection

1. Inspection of the windshield washer motor & pump ASSY
   (1) Operation inspection
      (a)When the windshield washer motor & pump ASSY is installed to the windshield washer tank, pour washer fluid into the windshield washer tank.

WW

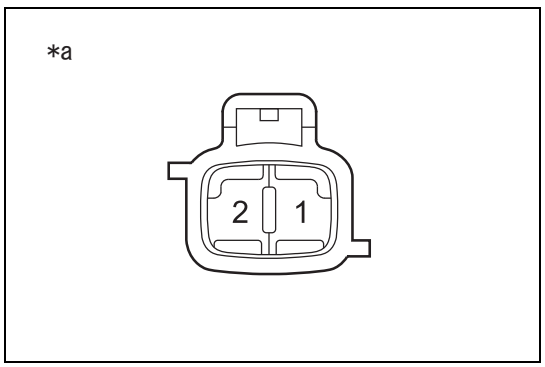

(b)Inspect if washer fluid is pumped when battery voltage is applied to each connector terminal.
Criteria

Battery connection	Criteria
Battery positive →1 Battery ground →2	Washer fluid is pumped from the front side.

Captions in illustration

*a	Connector not connected (Windshield washer motor & pump ASSY)

Washer tank

Exploded view

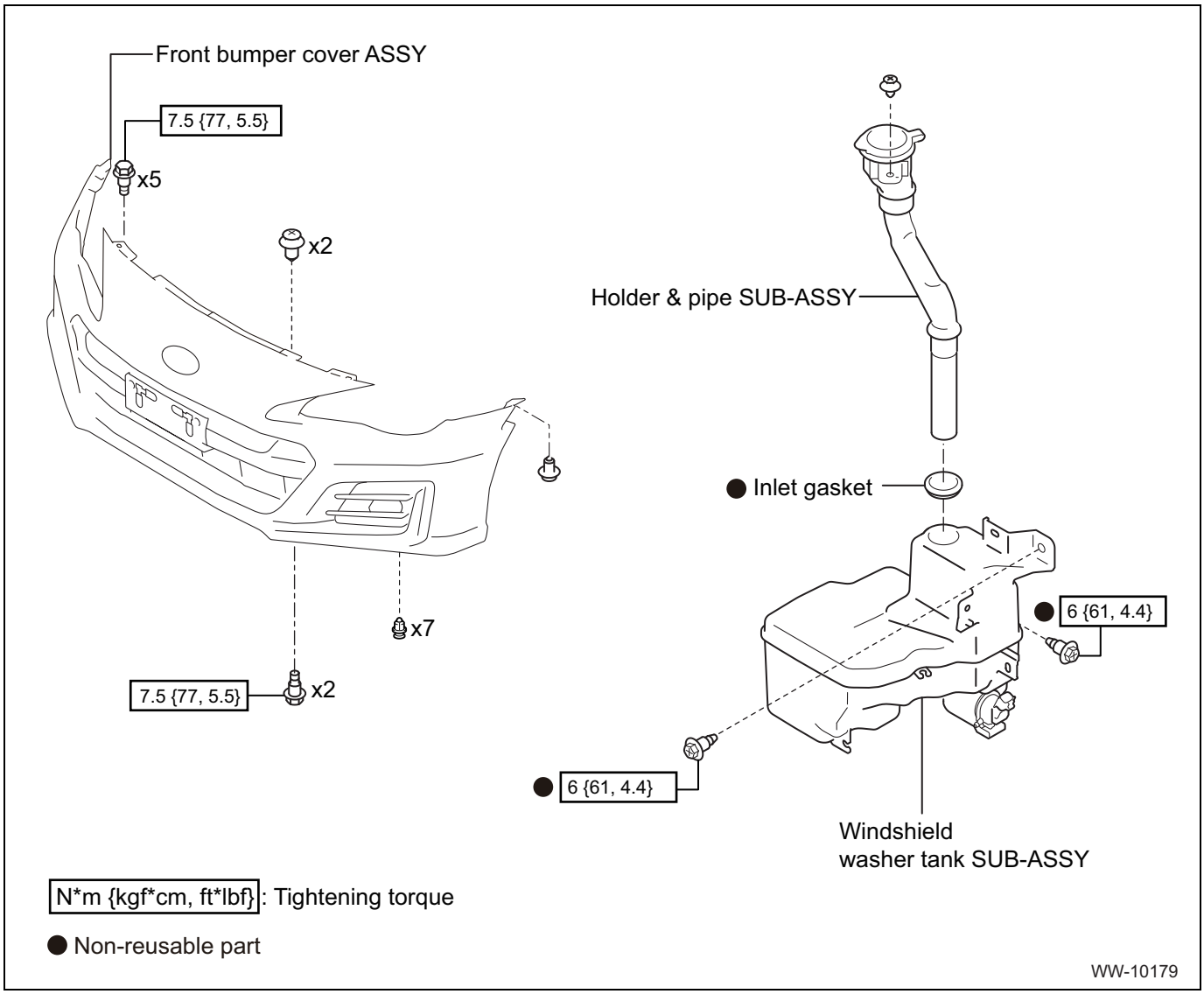

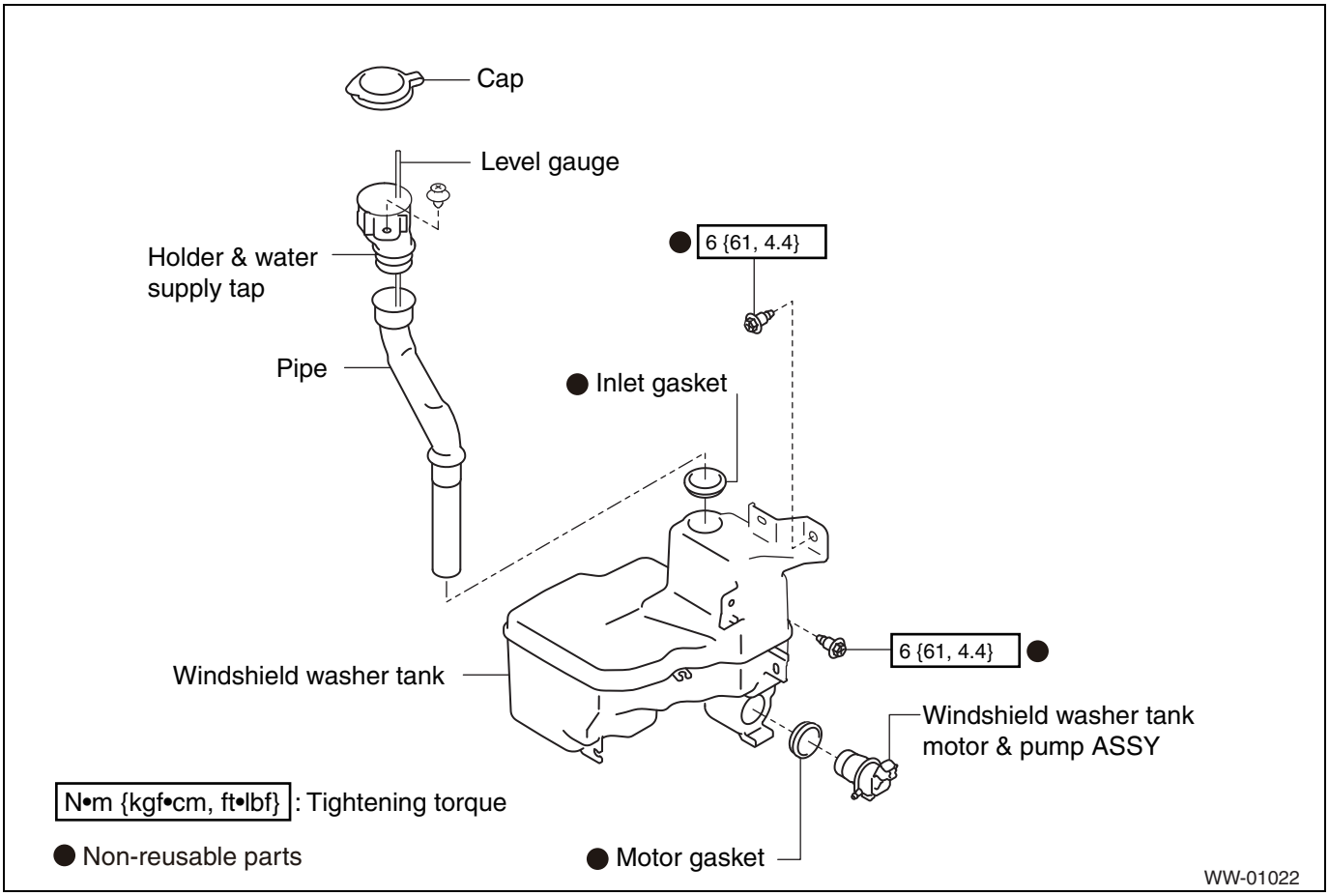

Removal

1. Removal of the front bumper cover (Refer to ET - 5)
2. Draining of the washer fluid (Refer to WW - 27)
3. Removal of the windshield washer motor & pump ASSY (Refer to WW - 28)
4. Removal of the windshield washer tank
   (1) Remove the clip.
   (2) Remove the holder & pipe SUB-ASSY from the windshield washer tank.
   (3) Remove the 2 bolts, and remove the windshield washer tank.

Installation

1. Installation of the windshield washer tank
   (1) Using 2 new bolts, install the windshield washer tank.
   Standard value:T=7.5N·m {77kgf·cm} {5.5ft·lbf}
   (2) Replace the inlet gasket with a new one, and install the holder & pipe SUB-ASSY.
   (3) Install the clip.
   Standard value:T=6N·m {61kgf·cm} {4.4ft·lbf}
2. Refilling washer fluid (Refer to WW - 28)
3. Installation of the windshield washer motor & pump ASSY (Refer to WW - 28)
4. Installation of the front bumper cover (Refer to ET - 12)

WW

Washer nozzle

Exploded view

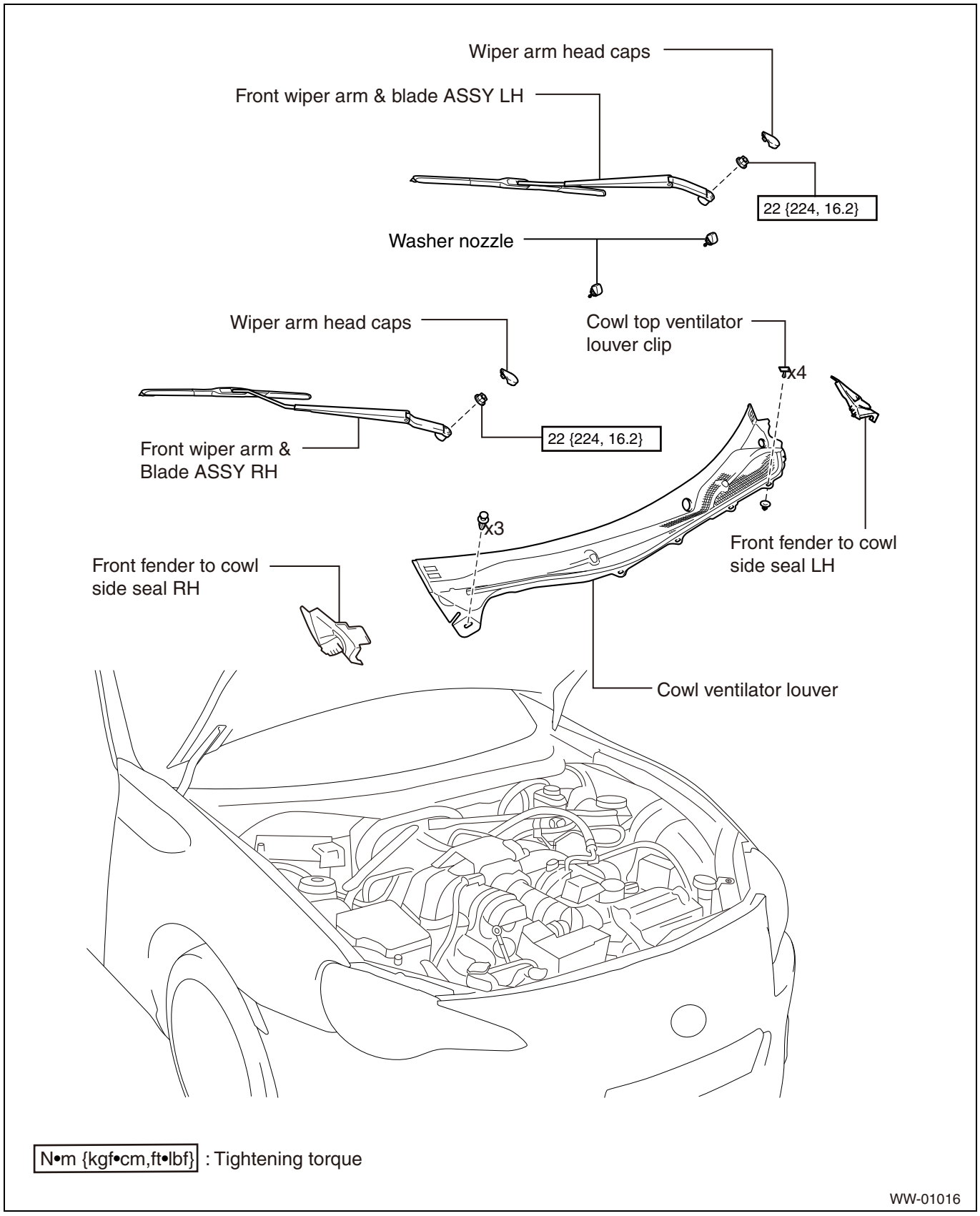

Removal

1. Removal of the wiper arm head caps (Refer to WW - 9)

2. Removal of the front wiper arm & blade ASSY LH (Refer to WW - 9)
3. Removal of the front wiper arm & blade ASSY RH (Refer to WW - 9)
4. Removal of the front fender to cowl side seal RH (Refer to WW - 10)
5. Removal of the front fender to cowl side seal LH
   NOTE:
   Perform the same procedures as RH side.
6. Removal of the cowl ventilator louver (Refer to WW - 10)

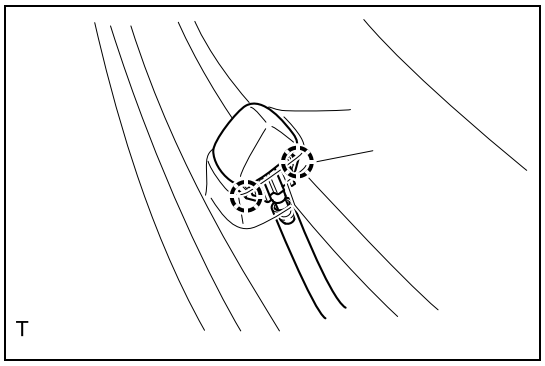

7. Removal of the washer nozzle
   (1) Release the 2 tabs and remove the washer nozzle.

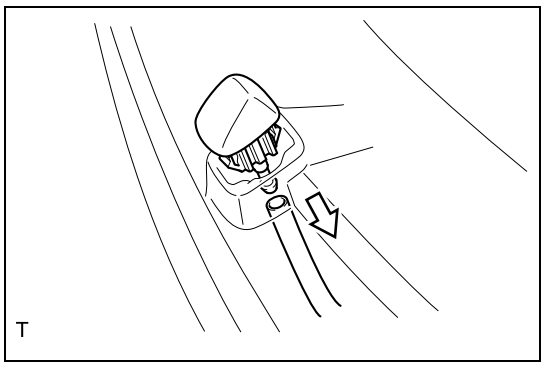

   (2) Disconnect the washer hose from the washer nozzle.

Installation

1. Installation of the washer nozzle
   (1) Connect the washer nozzle to the washer hose.
   (2) Fit in the 2 tabs and install the washer nozzle.
2. Installation of the cowl ventilator louver (Refer to WW - 14)
3. Installation of the front fender to cowl side seal RH (Refer to WW - 15)
4. Installation of the front fender to cowl side seal LH
   NOTE:
   Perform the same procedures as RH side.
5. Installation of the front wiper arm & blade ASSY RH (Refer to WW - 15)
6. Installation of the front wiper arm & blade ASSY LH (Refer to WW - 16)
7. Installation of the wiper arm head caps (Refer to WW - 16)
8. Washer nozzle inspection (Refer to WW - 33)
9. Washer nozzle adjustment (Refer to WW - 32)

Adjustment

1. Removal of the washer nozzle (Refer to WW - 31)
2. Washer nozzle adjustment
   (1) Using thin flat head screwdrivers wrapped with protective tape, adjust the nozzle jet of the washer nozzle so that the washer fluid sprays within the standard range.
   NOTE:
   When adjusting the washer nozzle, use the adjustment grooves on the upper and lower sides of the nozzle.

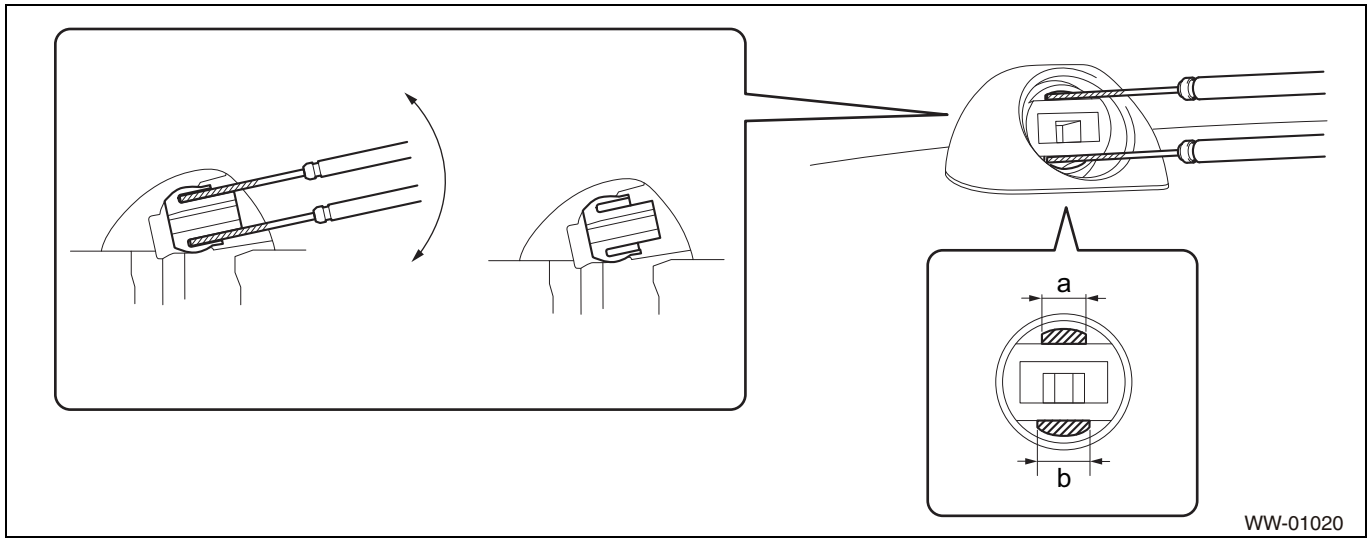

Reference values

*a	2.5mm	*b	2.8 mm

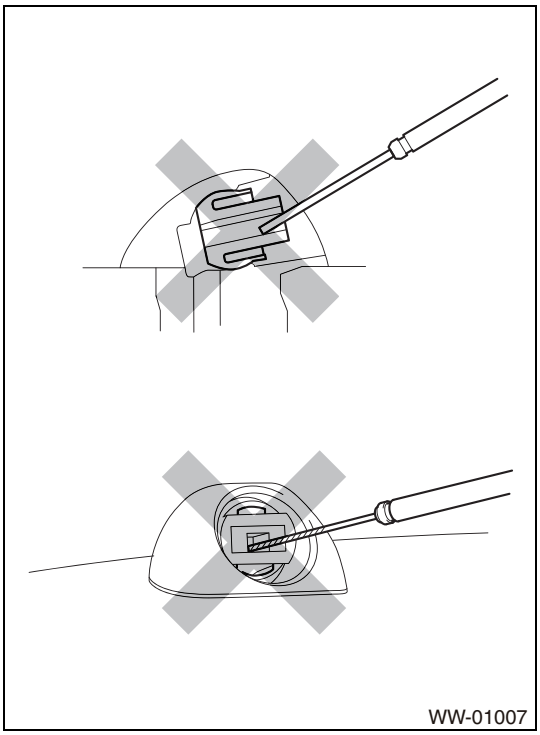

CAUTION:
- Because it may damage the washer nozzle discharge port and cause the washer liquid not to be sprayed correctly, do not insert a screwdriver into the washer nozzle discharge port.
- Do not use a tool which size is larger than the adjustment groove.

3. Installation of the washer nozzle (Refer to WW - 32)

On-vehicle inspection

1. Washer nozzle inspection
   (1) Turn the ignition switch to ON, and inspect where the washer liquid is sprayed.
   Criteria: Inside the range in the figure

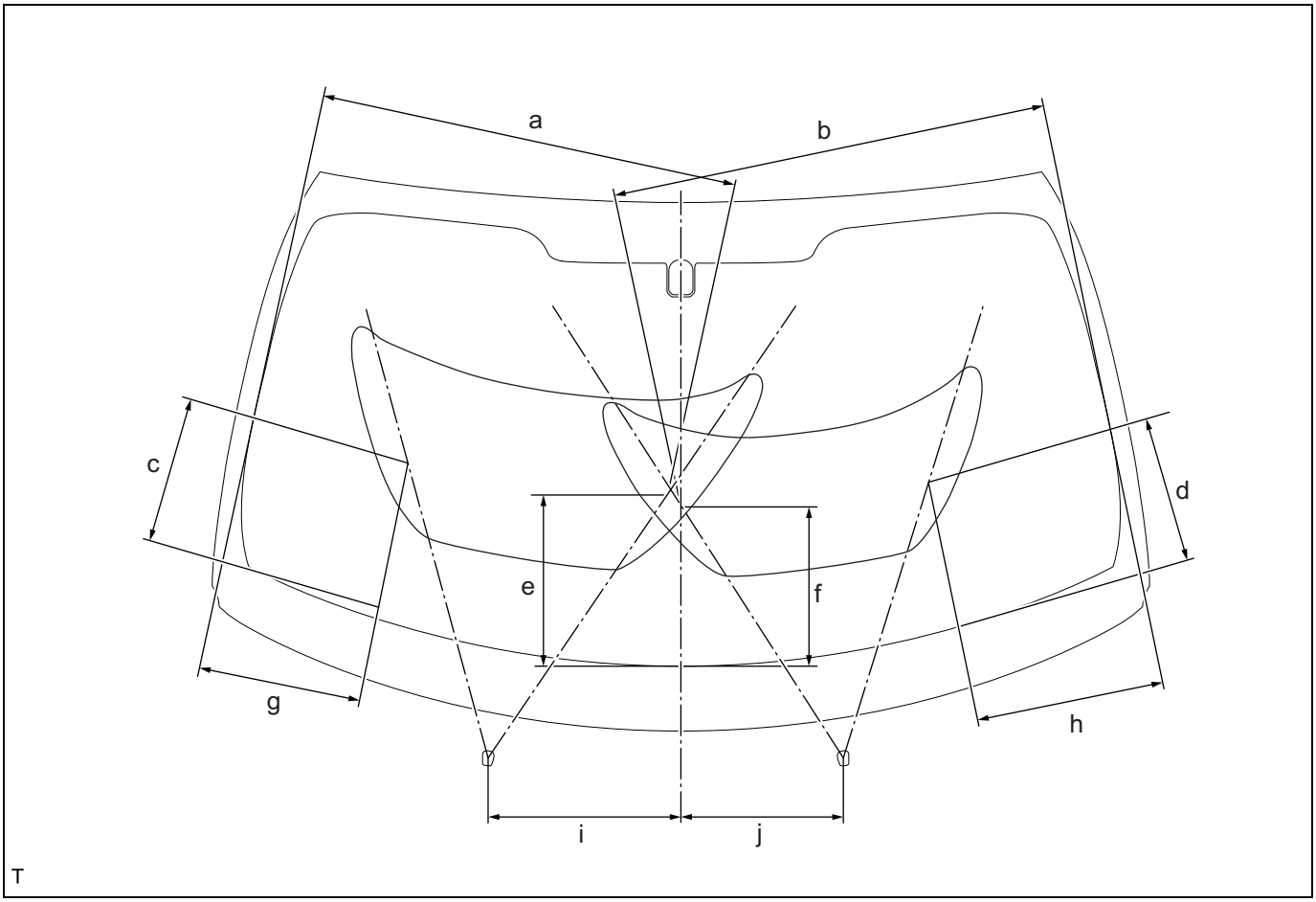

T

Standard value

Measurement place	Dimension	Measurement place	Dimension
a	660 mm {25.984 in}	b	684 mm {26.929 in}
c	247 mm {9.724 in}	d	232 mm {9.134 in}
e	268 mm {10.551 in}	f	250 mm {9.843 in}
g	253 mm {9.961 in}	h	299 mm {11.772 in}
i	300 mm {11.811 in}	j	250 mm {9.843 in}

CAUTION:
If the spray misses the standard area, adjust the washer nozzle.

Lighting (exterior)

Lighting system
- Precautions LE-4
- Function inspection LE-4
- Parts location LE-5
- List of diagnostic codes LE-7
- Symptom table LE-7
- How to troubleshoot LE-10
- Check list for interview LE-12
- Checking / clearing diagnostic codes LE-12
- Customize function LE-13
- Circuit figure LE-13
- ECM terminal arrangement LE-20
- Data monitor / active test LE-22
- B1244 . . . . . LE-23
- Low beam headlight circuit LE-25
- High beam headlight circuit LE-29
- Tail light circuit LE-32
- Headlight dimmer switch circuit LE-34

Auto leveling system
- Precautions LE-38
- Function inspection LE-38
- Registration settings LE-38
- Symptom table LE-42
- Check list for interview LE-44
- Circuit figure LE-45
- ECM terminal arrangement LE-46
- Failsafe list LE-46
- Headlight leveling motor circuit LE-47

Headlights
- Exploded view LE-50
- Removal LE-50
- Installation LE-51
- Adjustment LE-51

Fog light
- Exploded view LE-54
- Removal LE-54
- Installation LE-55
- Adjustment LE-55

Front side marker lights
- Exploded view LE-57
- Removal LE-57
- Disassembly LE-58
- Assembly LE-58
- Installation LE-59

Rear combination light
- Exploded view LE-60

Removal LE-61
Disassembly LE-62
Assembly LE-63
Installation LE-63
Unit inspection LE-63

Back-up light
Exploded view LE-65
Removal LE-65
Disassembly LE-66
Assembly LE-66
Installation LE-67
Unit inspection LE-67

License plate light
Exploded view LE-68
Removal LE-68
Installation LE-69
Unit inspection LE-69

High-mounted stop light
Exploded view LE-70
Removal LE-70
Installation LE-71
Unit inspection LE-71

Headlight dimmer switch
Exploded view LE-72
Removal LE-72
Installation LE-73
Unit inspection LE-74

Hazard warning switch
Exploded view LE-76
Removal LE-76
Installation LE-76
Unit inspection LE-77

Stop light switch
Exploded view LE-78
Removal LE-78
Installation LE-79
Unit inspection LE-80

Automatic light control sensor
Exploded view LE-81
Removal LE-81
Installation LE-81
On-vehicle inspection LE-82

Height control sensor
Exploded view LE-83
Removal LE-83
Installation LE-83
Unit inspection LE-84

Headlight leveling computer
Exploded view LE-85
Removal LE-85

Installation LE-85

Turn signal flasher

Exploded view LE-87
Removal. LE-87
Installation LE-87
On-vehicle inspection. LE-88

Relay

Unit inspection LE-89

Lighting system

Precautions

1. Precautions for replacing each light's bulb.
   (1) If you leave a bulb out for a long time after removal, debris or dampness may enter the lens. Therefore, replace the bulb after preparing a new bulb.
   (2) Be sure to replace the bulb with one of the same standard and wattage.
   (3) Replacing only one bulb may create a difference in the brightness and color of the light emitted from the left and right side.
   (4) Improper installation in the socket can cause cloudiness or water to enter to the lens, so after replacing the bulb, securely install it.
2. Precautions during headlight beam adjustment
   (1) If using a cover when the headlights are on, do not perform for 3 minutes or more.
   (2) Because the headlight outer lens is made of plastic, performing the adjustment for a long time will cause heat that may cause disfiguration.
3. Precautions when handling head light auto leveling
   (1) The initialization procedure is necessary when removing, installing, or replacing the height control sensor RR LH, when performing a procedure that changes the height of the vehicle, such as replacing the suspension, and when replacing the headlight leveling computer ASSY.
   NOTE:
   Refer to LE - 38for initialization.
   (2) When repairing or replacing the suspension, be sure to do so after removing the height control sensor RR LH.

Function inspection

1. Before troubleshooting
   (1) Basic inspection
   (a)Inspect the battery voltage.
   Standard value: 11 to 14 V (when IG OFF)
   (2) Inspect for blown light bulbs and fuses, wiring harnesses open circuit, short circuits, and poor contact of connectors, in places where you can inspect visually.
2. Operation inspection of the DRL system
   (1) Start the engine.
   (2) Move the shift lever in a position other than P.
   (3) Release the parking brake.
   (4) Turn the light control switch to the OFF position.
   (5) Check that the DRL lights turn on.
3. Battery saver inspection
   (1) With the ignition key removed from the IG SW, turn the light control switch to TAIL or HEAD, and turn on the headlights.
   (2) With the light control switch in the same position for 20 minutes, check that the headlights and tail lights turn off.

Parts location

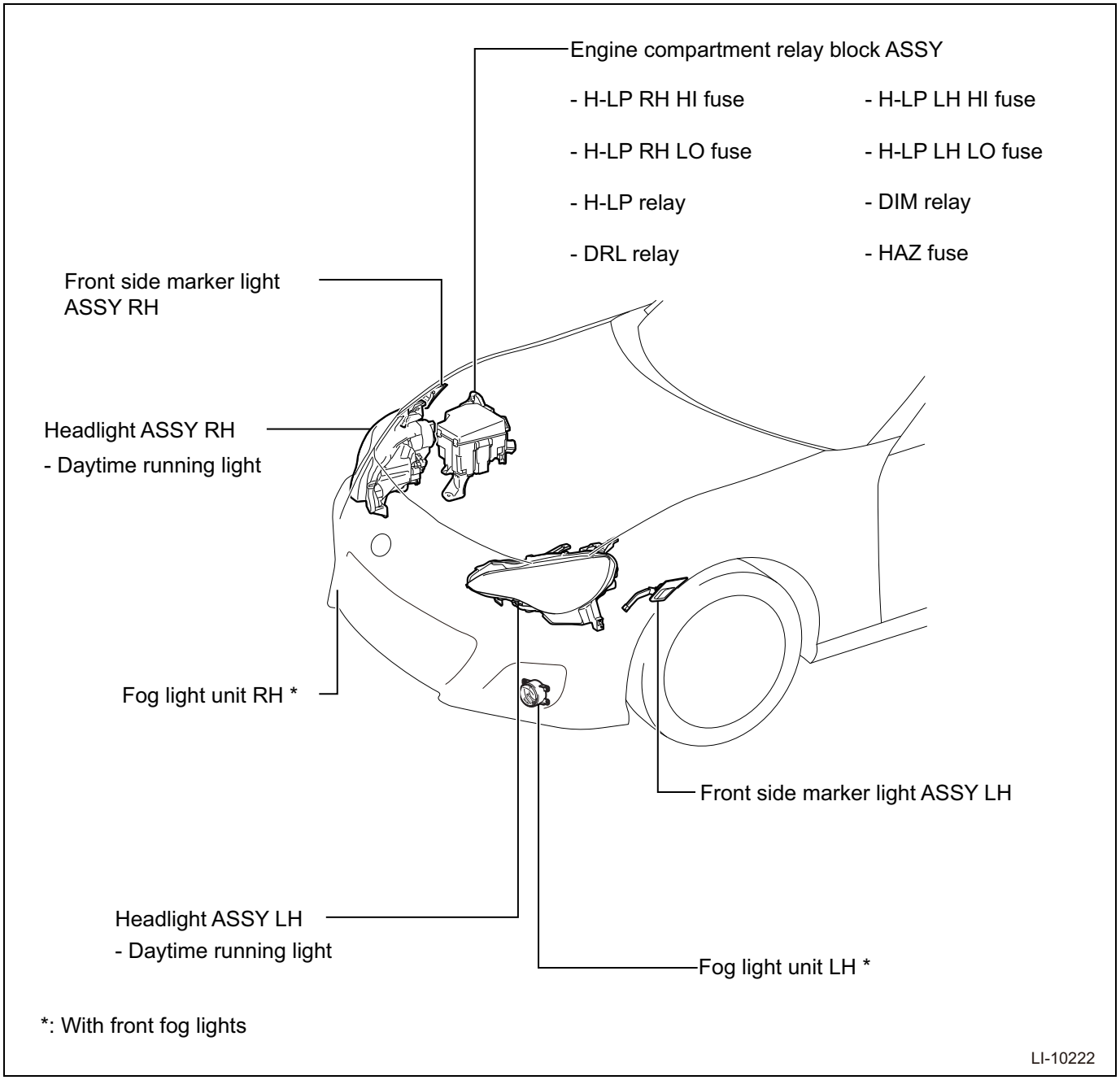

*: With front fog lights

LI-10222

LE

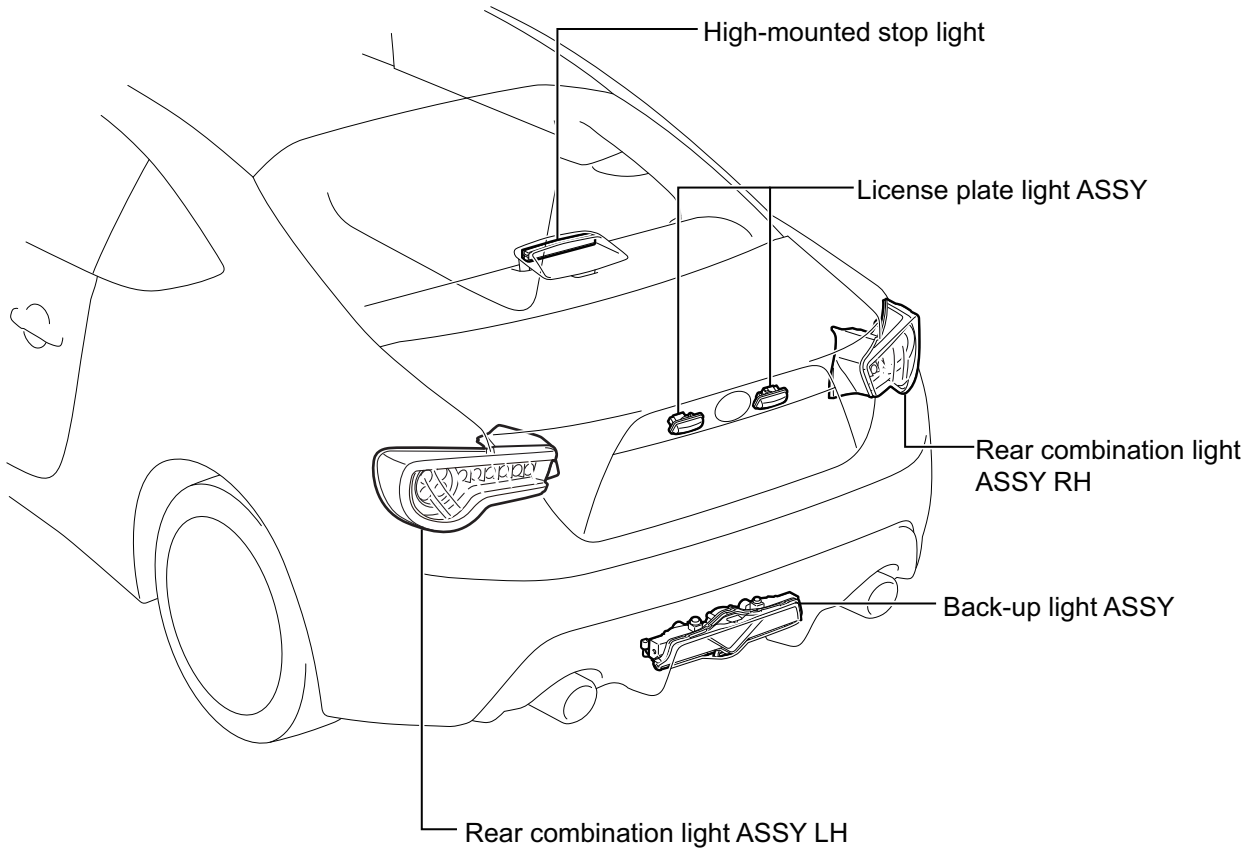
High-mounted stop light
License plate light ASSY
Rear combination light ASSY RH
Back-up light ASSY
Rear combination light ASSY LH
LI-10274

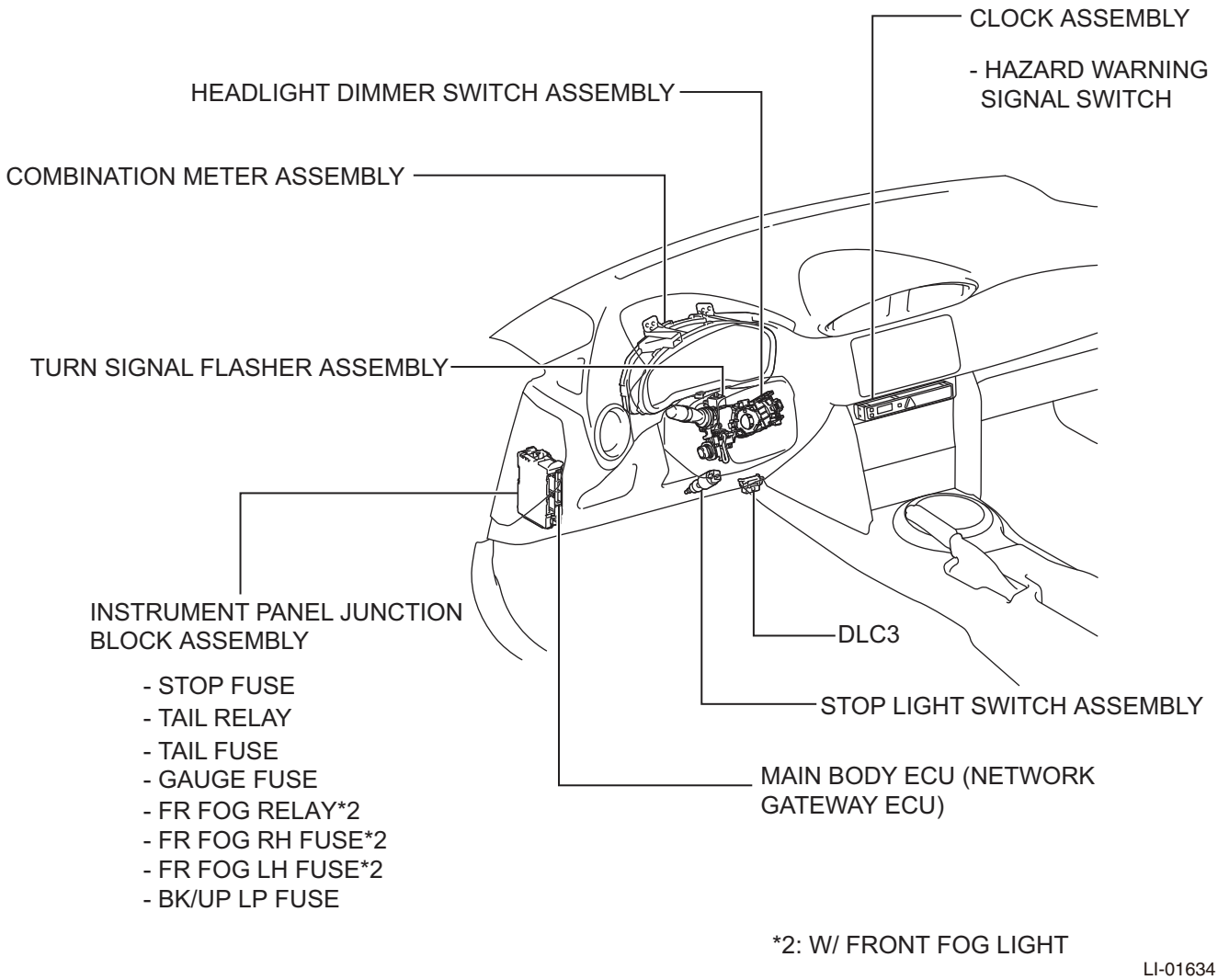

List of diagnostic codes

Lighting system

Diagnostic codes	Diagnostic items	Reference pages
B1244	[Light sensor system abnormal]	LE - 23

Symptom table

Headlights

Symptoms	Inspection items	Reference pages
The headlights (both LO and HI beam) don't turn on.	MAIN fuse	-
	Headlight dimmer switch circuit	LE - 34
	Main body ECM (Network gateway computer)	-
	Vehicle wiring harness and connector	-
The headlights (LO beam) don't turn on.	H-LP LH-LO fuse, H-LP RH-LO fuse	-
	Headlight dimmer switch circuit	LE - 34
	Low beam headlight circuit	LE - 25
	Main body ECM (Network gateway computer)	-
	Vehicle wiring harnesses and connectors (low beam headlight - H-LP relay, chassis ground)	-
	Headlight ASSY	-

Symptoms	Inspection items	Reference pages
One of the headlights (LO beam) doesn't turn on.	H-LP LH LO, H-LP RH LO fuse	-
	Headlight light control computer ASSY	-
	Headlight ASSY	-
	Vehicle wiring harnesses and connectors (low beam headlight - H-LP relay, chassis ground)	-
	Headlight ASSY	-
The headlights (HI beam) don't turn on.	H-LP LH HI, H-LP RH HI fuse	-
	Headlight dimmer switch circuit	LE - 34
	High beam headlight circuit	LE - 29
	Vehicle wiring harnesses and connectors (low beam headlight - DIM relay, chassis ground)	-
	Main body ECM (Network gateway computer)	-
	Headlight light control computer ASSY	-
	Headlight ASSY	-
One of the headlights (HI beam) doesn't turn on.	H-LP LH HI, H-LP RH HI fuse	-
	Headlight light control computer ASSY	-
	Vehicle wiring harnesses and connectors (low beam headlight - DIM relay, chassis ground)	-
	Headlight ASSY	-
Flashing doesn't function.	Headlight dimmer switch circuit	LE - 34
	Vehicle wiring harnesses and connectors (low beam headlight - DIM relay, chassis ground)	-
The headlight (discharge bulb) flickers, is dark.	Headlight light control computer ASSY	-
	Vehicle wiring harnesses and connectors (low beam headlight - H-LP relay, chassis ground)	-
	Headlight ASSY	-
Clearance lights don't turn on.	Headlight dimmer switch circuit	LE - 34
	Vehicle wiring harnesses and connectors (low beam headlight - H-LP relay, chassis ground)	-
	Headlight ASSY	-

Tail lights

Symptoms	Inspection items	Reference pages
All tail lights (including the clearance lights and the license plate light) don't turn on.	TAIL fuse	-
	Headlight dimmer switch circuit	LE - 34
	Tail light circuit	LE - 32
	Main body ECM (Network gateway computer)	-
	Vehicle wiring harness and connector	-
One of the tail lights doesn't turn on.	Rear combination light ASSY	-
	Rear combination light socket & wiring SUB-ASSY	LE - 63
	Vehicle wiring harness and connector	-

License plate light

Symptoms	Inspection items	Reference pages
The license plate light doesn't turn on.	License plate light bulb	-
	License plate light ASSY	LE - 69
	Vehicle wiring harness and connector	-

Front fog lights

Symptoms	Inspection items	Reference pages
Both front fog lights don't turn on.	FR FOG RH, FR FOG LH fuse	-
	FR FOG relay	-
	Headlight dimmer switch circuit	LE - 34
	Main body ECM (Network gateway computer)	-
	Vehicle wiring harnesses and connectors (front fog lights - instrument panel junction block ASSY, chassis ground)	-

Symptoms	Inspection items	Reference pages
One front fog light doesn't turn on.	Fog light bulb	-
	Vehicle wiring harness and connector	-

Back-up light

Symptoms	Inspection items	Reference pages
All back-up lights don't turn on.	BK/UP LP fuse	-
	Back-up light switch ASSY *1	LE - 67
	Neutral start switch ASSY *2	AT - 190
	Vehicle wiring harness and connector	-
One of the back-up lights doesn't turn on.	Back-up light bulb	-
	Rear light sockets & wiring	-
	Vehicle wiring harness and connector	-

*1: Transmission M/T

*2: Transmission A/T

Stop lights

Symptoms	Inspection items	Reference pages
All stop lights don't turn on.	STOP fuse	-
	Noise filter	AV - 40
	Stop light switch ASSY	LE - 80
	Vehicle wiring harness and connector	-
One of the stop lights doesn't turn on.	Rear combination light ASSY	-
	Rear combination socket & wiring SUB-ASSY	LE - 63
	Vehicle wiring harness and connector	-

High-mounted stop light

Symptoms	Inspection items	Reference pages
The high-mounted stop light does not turn on.	Center stop light ASSY	LE - 71
	Vehicle wiring harness and connector	-

Turn signal lights

Symptoms	Inspection items	Reference pages
All turn signal lights don't turn on.	GAUGE fuse	-
	Turn signal flasher ASSY	LE - 88
	Headlight dimmer switch ASSY	LE - 74
	Vehicle wiring harness and connector	-
One of the front turn signal lights doesn't turn on. Front turn signal light bulb	Headlight ASSY	-
	Front turn signal light socket & wiring LH	-
	Vehicle wiring harness and connector	-
One of the side turn signal lights doesn't turn on.	Side turn signal light bulb	-
	Side turn signal light ASSY	-
	Side turn signal light socket plug	-
	Vehicle wiring harness and connector	-
One of the rear turn signal lights doesn't turn on.	Rear combination light ASSY	-
	Rear combination socket & wiring SUB-ASSY	LE - 63
	Vehicle wiring harness and connector	-

Hazard warning signal lights

Symptoms	Inspection items	Reference pages
Hazard lights don't function. (Turn signals function normally)	Turn signal flasher ASSY	LE - 88
	Clock ASSY	LE - 77
	Vehicle wiring harness and connector	-

Light auto cut control

Symptoms	Inspection items	Reference pages
Light auto cut system doesn't operate. (other controls function normally)	Front door courtesy light switch circuit	LI - 33
	IG signal circuit	LI - 23
	Main body ECM (Network gateway computer)	-

Daytime Running Light System

Symptoms	Inspection items	Reference pages
Daytime running light system does not operate.	MPX-B fuse	-
	DRL relay	-
	Low beam headlight relay circuit	LE - 25
	Taillight relay circuit	LE - 32
	Main body ECU (network gateway ECU)	-
	Harness or connector	-
	Headlight ASSY	-

How to troubleshoot

1	Bring in the car

Next

2	Interview and phenomenon check

Next

3	Communication function inspection of the CAN communication system

(1) Check CAN communication system. (Refer to NW - 30)

Result

Result	Go to
Functioning properly	A
Not functioning properly	B

B → To CAN communication system (Refer to NW - 30)

A

4	DTC check

NOTE:

Refer to LE - 12.

(1) DTC check
  (a) Record the diagnostic codes.
(2) Clear diagnostic code
(3) Do a DTC check again.
  (a) Based on the recorded diagnostic codes, reproduce the trouble phenomenon, and check if the diagnostic codes are output again.

NOTE:

When the diagnostic codes are output, see the “List of diagnostic codes” (Refer to LE - 7).

Result

Result	Go to
No code, can check and reproduce phenomenon	A
No code, can't check and reproduce phenomenon	B
Code is output	C

B → To fault simulation (Refer to IN - 32)

C → See inspection step 7

A

5	Symptom table

NOTE:
Refer to LE - 7.
Result

Result	Go to
Not applicable to the symptom table.	A
Applicable to the symptom table.	B

B → See inspection step 7

A

6	Based on the trouble phenomenon, perform troubleshooting following the steps below.

(1) Function inspection (Refer to LE - 4)
(2) ECM terminal arrangement (Refer to LE - 20)
(3) Data monitor / active test (Refer to LE - 22)
(4) Symptom table (Refer to LE - 7)
(5) On-vehicle inspection
(6) Unit inspection

Next

7	Adjustment, repair, or replacement

Next

8	Confirmation test

Next

Complete

Check list for interview

Lighting (Exterior) Diagnosis Checklist for Interview

Year/date of vehicle bring-in: Year Month Date

Name		Registration No.		First registration	Year Month Date
		Vehicle model		Frame No.	
Interviewer		Inspector		Engine type		Odometer reading	

Customer specified content

Date when trouble occurred (from when)	Year Month Date Time
Frequency of occurrence	Continuous Sometimes (times/day, times/month)
Condition of trouble occurrence	

Weather	Fine / Cloudy / Rainy / Snowy / Other ( )	Temperature	Approx. ( ) °C (°F)
Road	Inner city / Suburbs / Highway / Others ( )		Paved road / Unpaved road

Trouble symptom	Illumination	
	Switch	

DTC check	Parts name	1st output code	2nd output code

LI-01604

Checking / clearing diagnostic codes

1. Preparation before inspection
   (1) Turn the ignition switch to OFF.

LE

2. Checking diagnostic codes (reading with SSM4)
   (1) With IG OFF, connect SSM4 to DLC3.
   (2) Turn IG to ON, and turn on the SSM4.
   (3) Operate following the SSM4 display screen. Display [Each System] →[Body Control] screens, and select [DTC].
   (4) Check the diagnostic codes.
3. Clearing diagnostic code records (Cleared by the SSM4)
   (1) With IG OFF, connect SSM4 to DLC3.
   (2) Turn IG to ON, and turn on the SSM4.
   (3) Operate following the SSM4 display screen. Display [Each System] →[Body Control] screens, and select [Clear Memory].
   (4) Inspect the diagnosis codes again, and check that the malfunction code was cleared, and that the normal code is displayed.
   CAUTION:
   • If you can't clear it, start over from IG OFF status.
   • Do not use the SSM4 to delete diagnostic codes until the cause of the trouble has been identified.

customize function

1. Customize the lighting system (exterior)
   (1) Customization using the SSM4
   (a)Connect the SSM4 to the DLC3 and turn the ignition to IG ON.
   (b)From the SSM4 display screen, select [Each System] →[Body Control] →[Customize] →“each item” to customize the settings.

Display name	Initial setting	Contents	Setting	Controller ECM
[Light Auto OFF Delay]	30 s	Setting of lighting time for light auto cut function	OFF, 30 s, 60 s or 90 s	Main body ECM (multiplex network body computer)
[Welcome Light Off Delay Time (Approaching)]	30 s	Setting of lighting time for welcome light function (entering the vehicle)	OFF, 30 s, 60 s or 90 s	
[Auto Dimmer Cancel Setting]	3	Setting of auto dimmer cancel function	0 (OFF)/stage 1 (least sensitive)/stage 2 (less sensitive)/stage 3 (standard)/stage 4 (more sensitive)/stage 5 (very sensitive)	
[Wiper Link Auto Light Setup]	ON	Switching of auto light function linked to wipers ON/OFF	ON or OFF	
[Lane Change Signal Setting]	ON	Switching of lane change signal function ON/OFF	ON or OFF	
[Auto Light Sensitivity]	±0%	Auto light control sensor sensitivity (illumination detection) adjustment function settings (The higher the set value, the easier the light turns on)	-40% / -20% / ±0% / +20% / +40%	
[DRL Function]	ON	ON/OFF of the DRL function	ON or OFF	

CAUTION:
Items without settings are not displayed in the SSM4 or do not function.

Circuit figure

1. Headlights

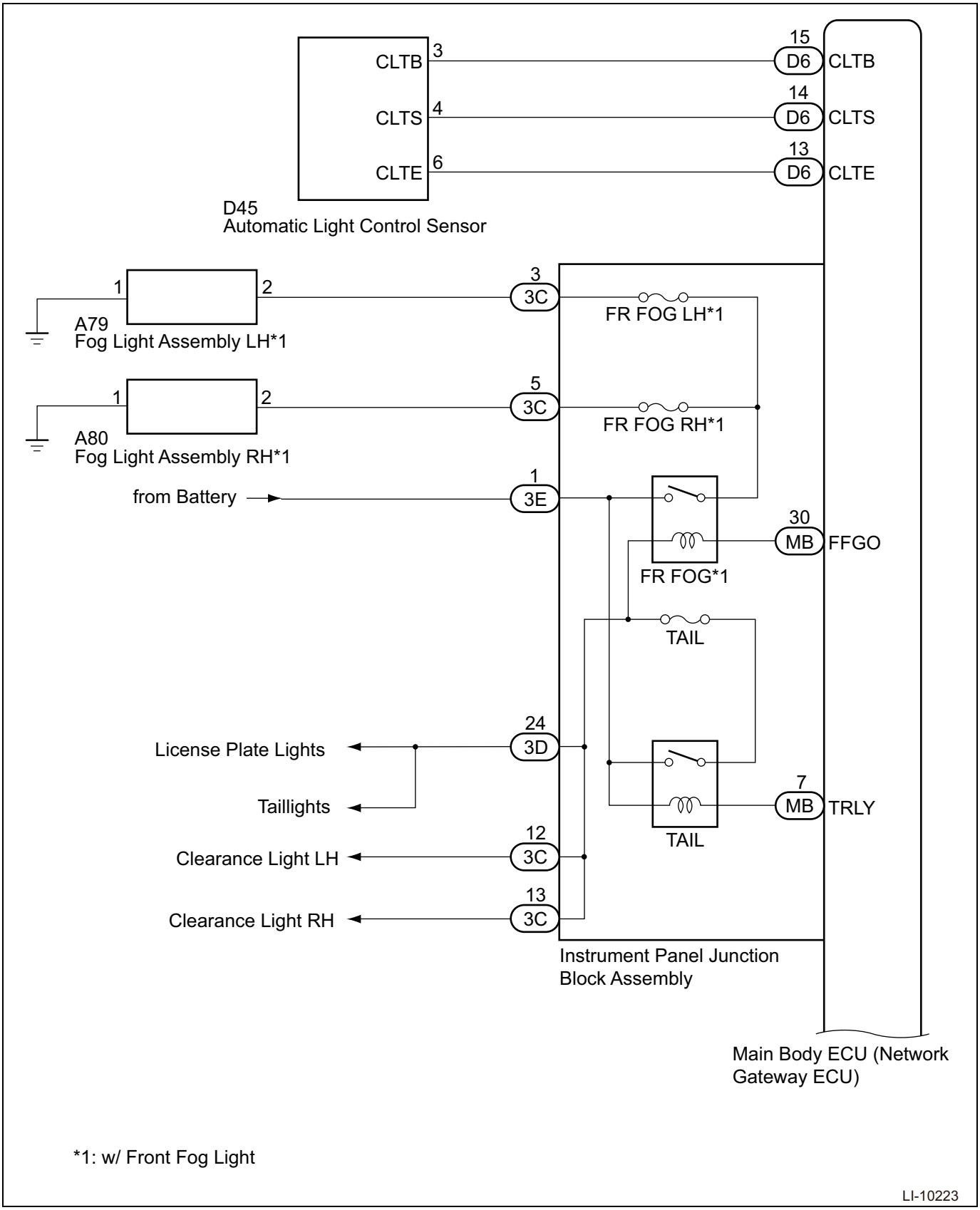

*1: w/ Front Fog Light

LI-10223

LE

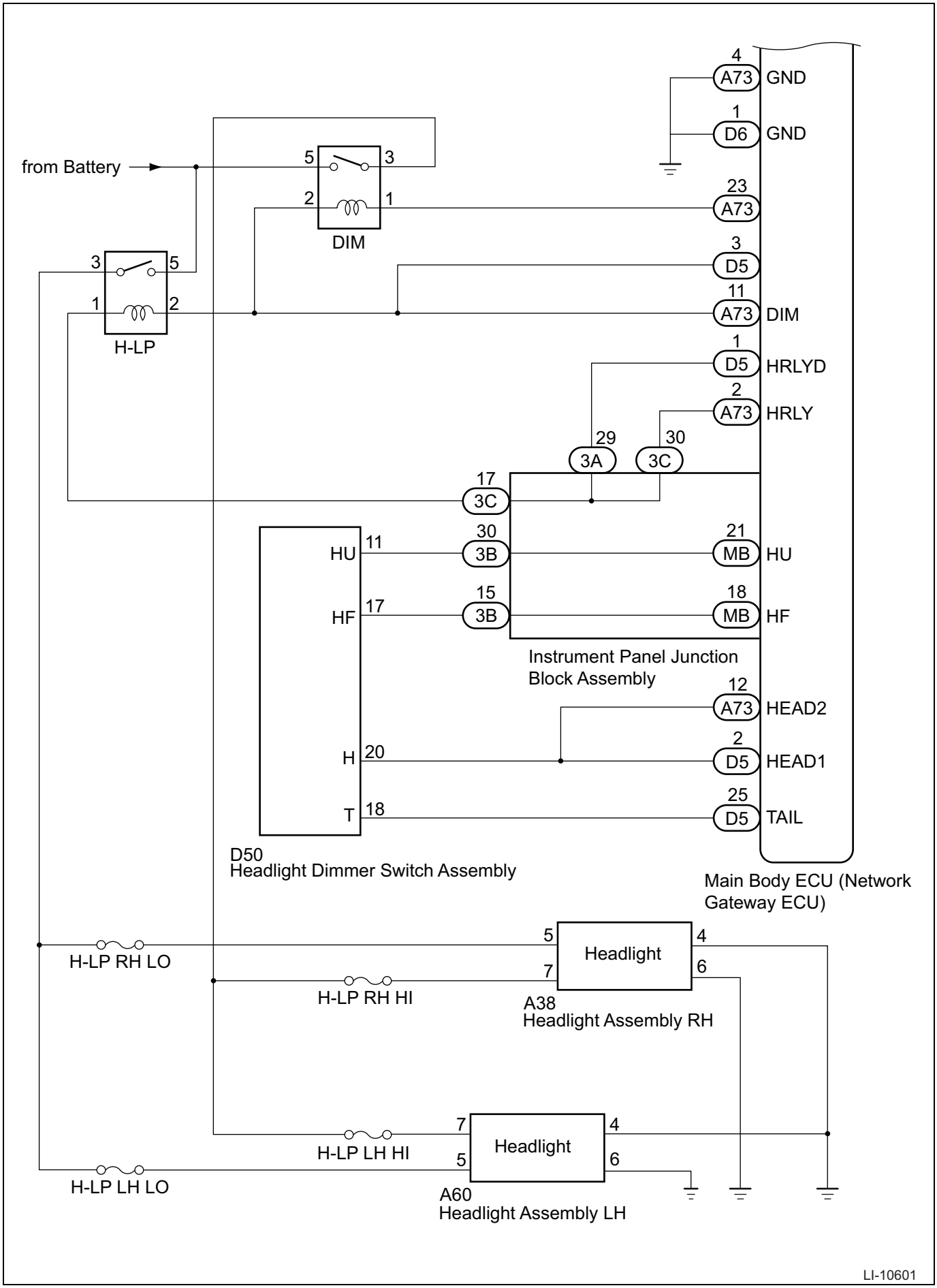
4
A73
GND
1
D6
GND
from Battery
5
3
2
1
DIM
23
A73
3
5
1
2
H-LP
3
D5
11
A73
DIM
1
D5
HRLYD
2
A73
HRLY
29
30
3A
3C
17
3C
HU
11
30
3B
21
MB
HU
HF
17
15
3B
18
MB
HF
Instrument Panel Junction
Block Assembly
12
A73
HEAD2
H
20
2
D5
HEAD1
T
18
25
D5
TAIL
D50
Headlight Dimmer Switch Assembly
Main Body ECU (Network
Gateway ECU)
H-LP RH LO
5
Headlight
4
7
6
H-LP RH HI
A38
Headlight Assembly RH
7
4
H-LP LH HI
Headlight
5
6
H-LP LH LO
A60
Headlight Assembly LH
LI-10601

LE

2. Turn signal lights, hazard warning signal lights

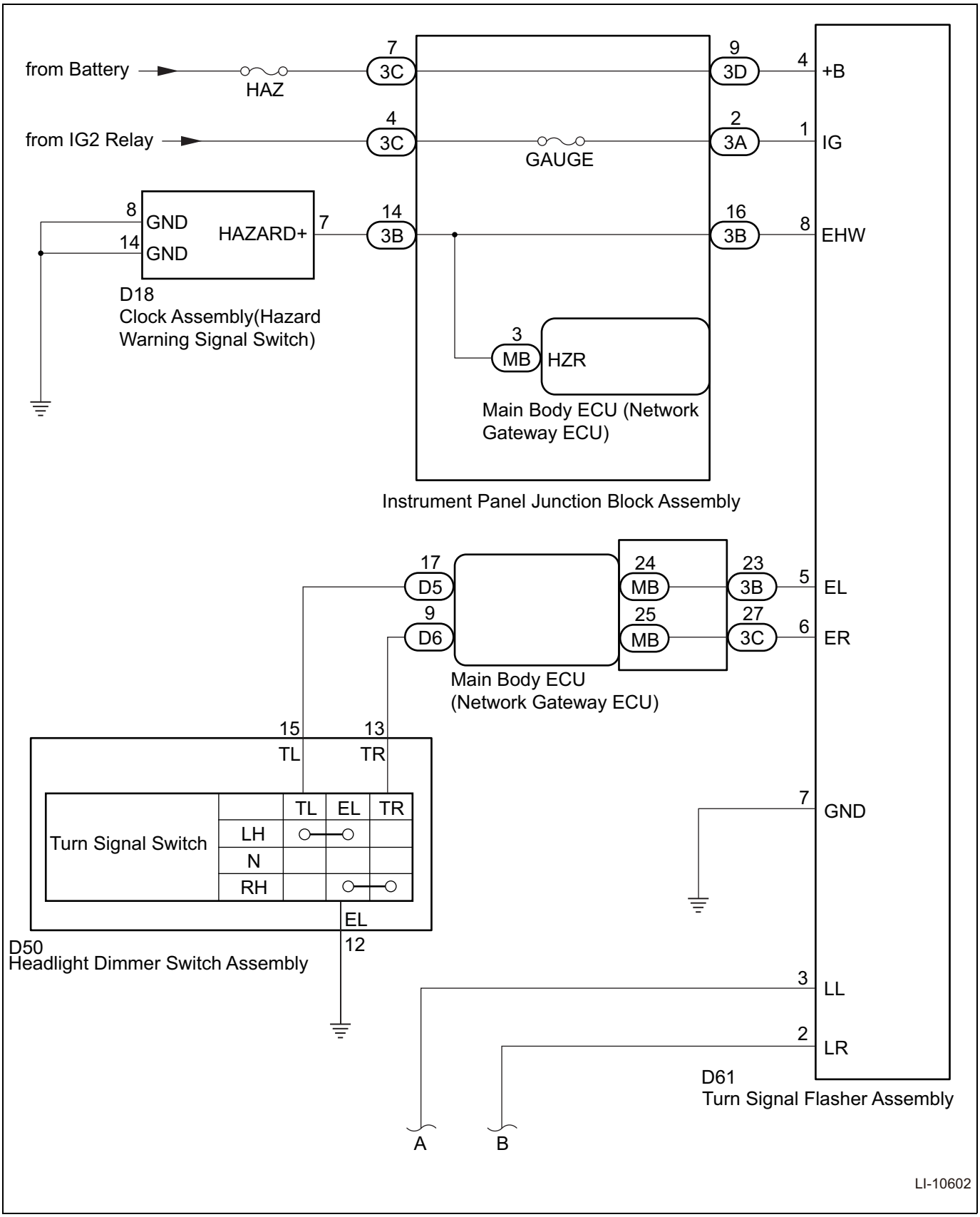

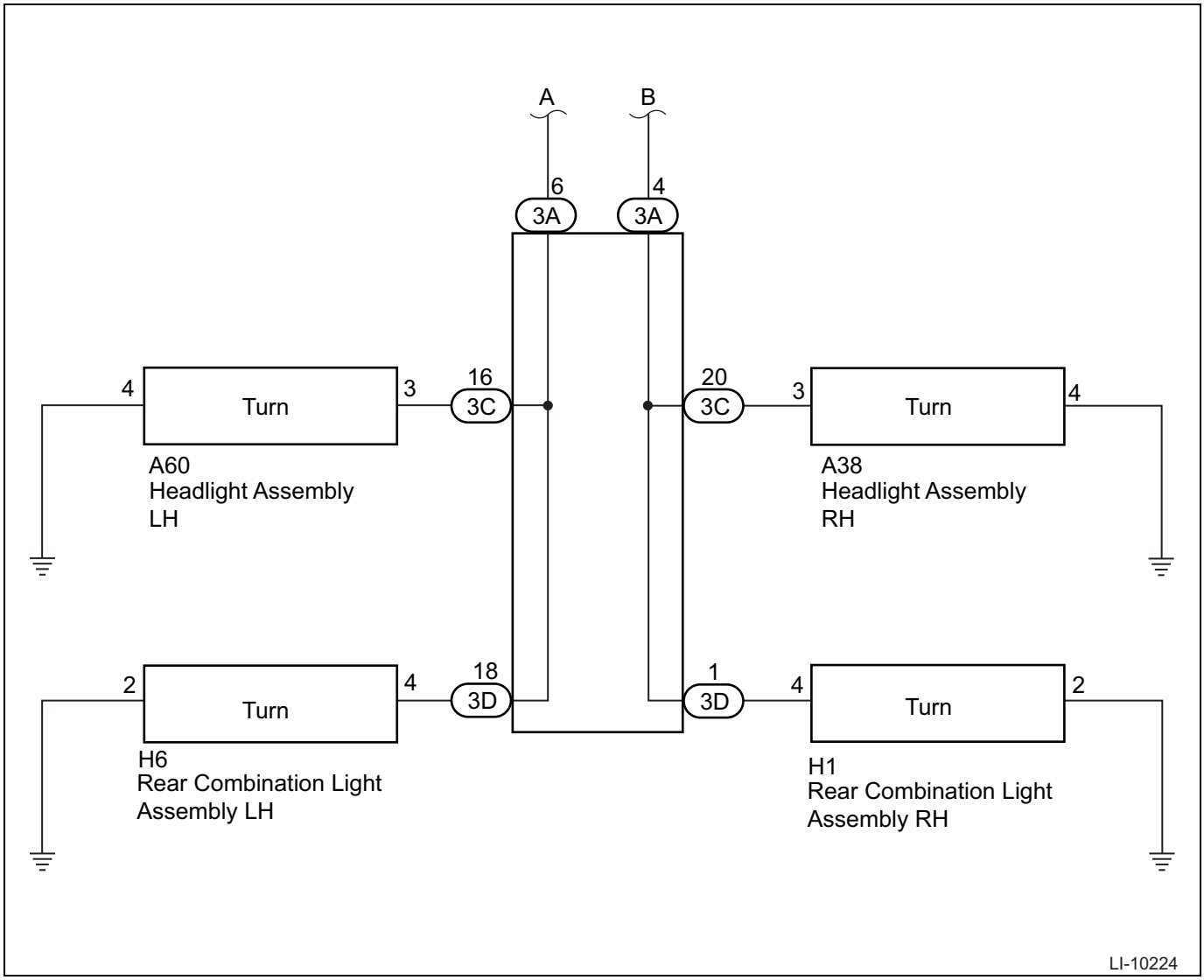

3. Stop lights

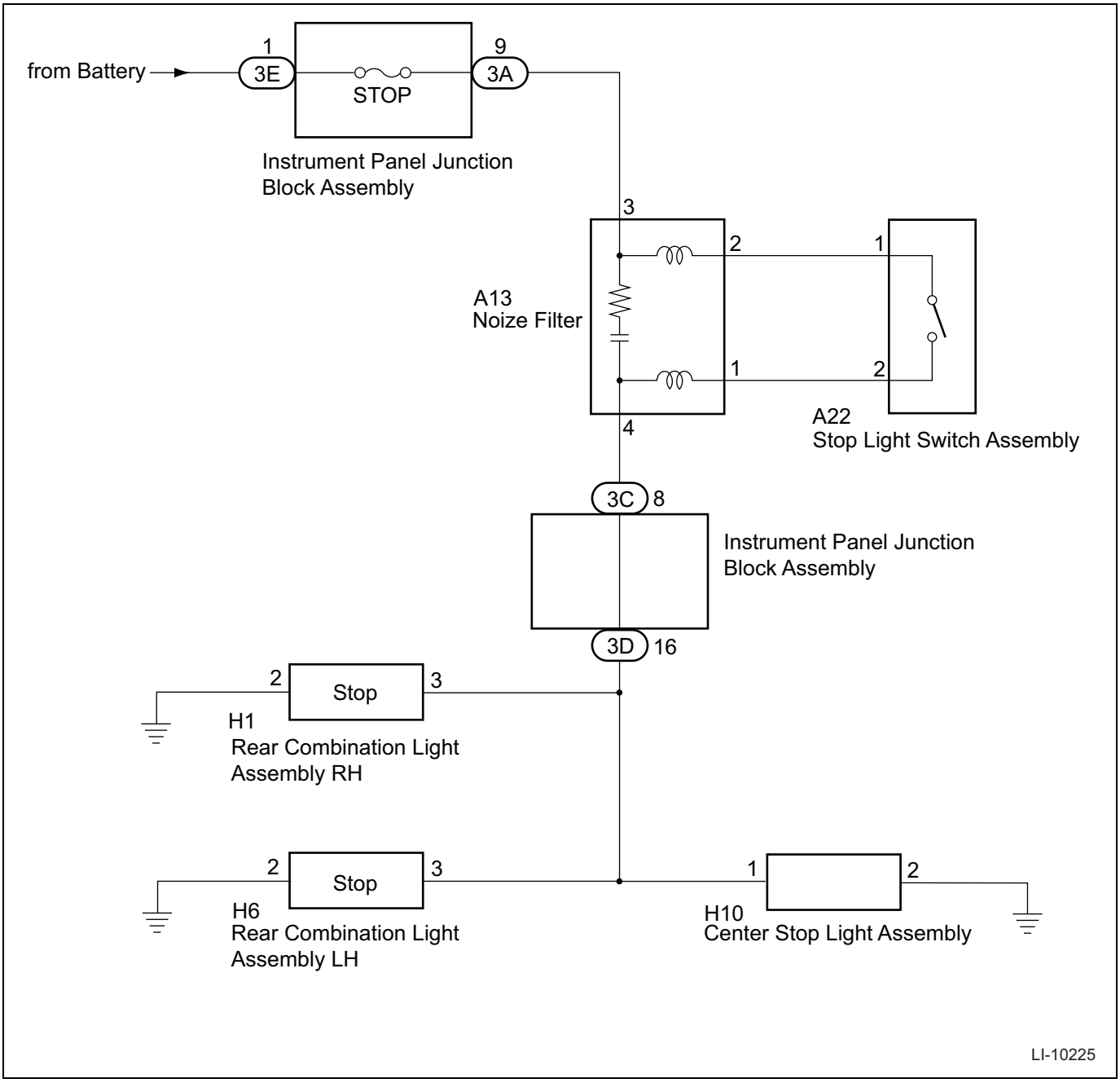

4. DAYTIME RUNNING LIGHT SYSTEM

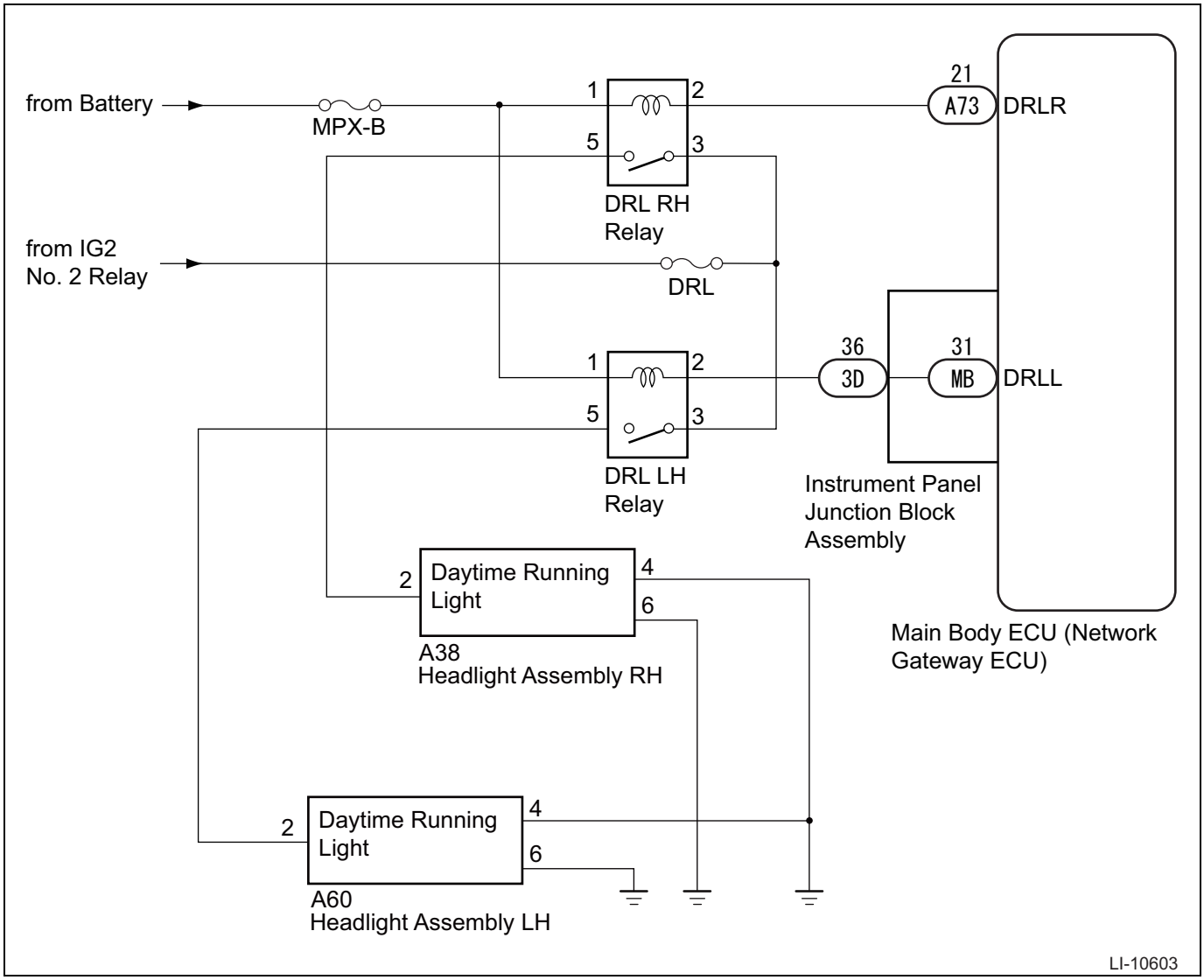
from Battery
MPX-B
1
2
5
3
DRL RH
Relay
from IG2
No. 2 Relay
DRL
1
2
5
3
DRL LH
Relay
21
A73
DRLR
36
3D
31
MB
DRLL
Instrument Panel
Junction Block
Assembly
Main Body ECU (Network
Gateway ECU)
2
Daytime Running
Light
4
6
A38
Headlight Assembly RH
2
Daytime Running
Light
4
6
A60
Headlight Assembly LH
LI-10603

LE

ECM terminal arrangement

1. Main body ECM (network gateway computer), instrument panel junction block ASSY

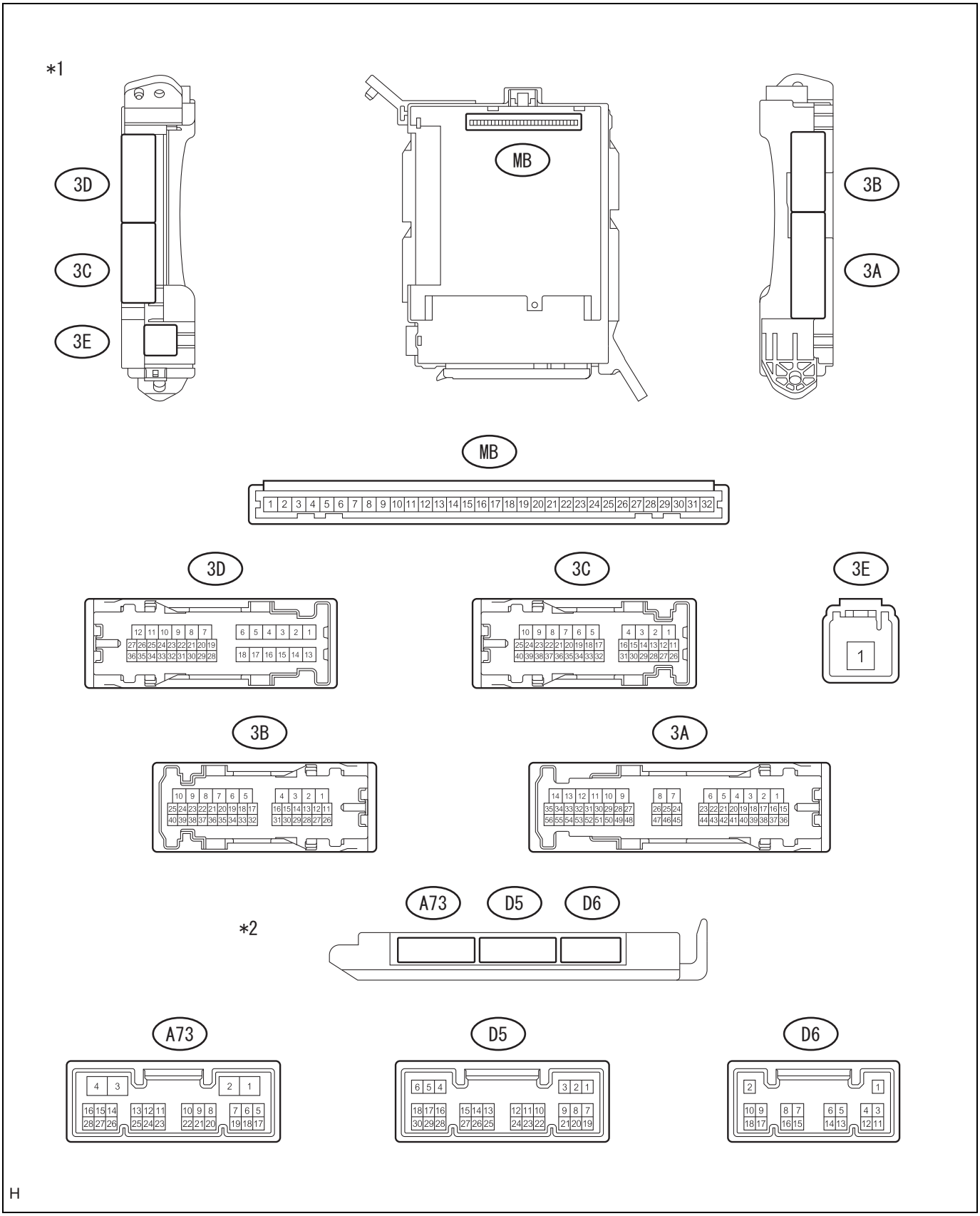

Captions in illustration

*1	Instrument panel junction block ASSY	*2	Main body ECM (Network gateway computer)

(1) Inspection of the instrument panel junction block ASSY and the main body ECM (network gateway computer)

(a)Remove the main body ECM (network gateway computer) from the instrument panel junction block ASSY.

(b)Measure the voltage and resistance between terminals.

Standard value

Terminal No. (Terminal symbol)	Inspection conditions	Standard value
A73-2 (HRLY) ←→Chassis ground	Always	11 to 14 V
A73-4 (GND) ←→Chassis ground	Always	Less than 1 Ω
A73-23 ←→Chassis ground	Always	11 to 14 V
MB-30 (FFGO) ←→Chassis ground	When the tail lights are on	11 to 14 V
D6-1 (GND) ←→Chassis ground	Always	Less than 1 Ω
3C-4 ←→Chassis ground	IG ON	11 to 14 V
3C-7 ←→Chassis ground	Always	11 to 14 V
3E-1 ←→Chassis ground	Always	11 to 14 V

NOTE:

If it is outside the standard values, the vehicle is defective.

(c)Install the main body ECM (network gateway computer) on the instrument panel junction block ASSY.

(d)Measure the resistance between the terminals.

Standard value

Terminal No.	Inspection conditions	Standard value
D6-13 (CLTE)* ←→Chassis ground	Always	Less than 1 Ω

*: When there is auto light control

(e)Measure the voltage between the terminals.

Standard value

Terminal No. (Terminal symbol)	Inspection conditions	Standard value
A73-11 (DIM) ←→Chassis ground	When in key SW OFF, IG OFF, or ACC OFF, light control switch OFF →HEAD	Less than 1 V →11 to 14 V
A73-12 ←→Chassis ground	IG ON, light control switch OFF →HEAD	11 to 14 V →Less than 1 V
D5-2 (HEAD) ←→Chassis ground	Key SW ON, light control switch OFF →HEAD*1	11 to 14 V →Less than 1 V
	ACC ON, light control switch OFF →HEAD*2	
D5-23 (A)*3 ←→Chassis ground	Light control switch OFF →AUTO	11 to 14 V →Less than 1 V
D5-24 (FFOG) ←→Chassis ground	Front fog light switch OFF →ON	11 to 14 V →Less than 1 V
D5-25 (TAIL) ←→Chassis ground	Light control switch OFF →TAIL	11 to 14 V →Less than 1 V
D6-14 (CLTS)*3 ←→Chassis ground	IG ON, light control switch is AUTO, automatic control sensor is covered by something that doesn't let light through →exposed	Pulse generation (changes according to the light) (waveform 1)
D6-15 (CLTB)*3 ←→Chassis ground	IG ON	11 to 14 V
MB-18 (HF) ←→Chassis ground	Headlight dimmer switch (flashing) OFF→ON	11 to 14 V →Less than 1 V
MB-21 (HU) ←→Chassis ground	When the light control switch is set to HEAD, LO beam →HI beam	11 to 14 V →Less than 1 V

*1: Without smart entry & start system

*2: With smart entry & start system

*3: With auto light control

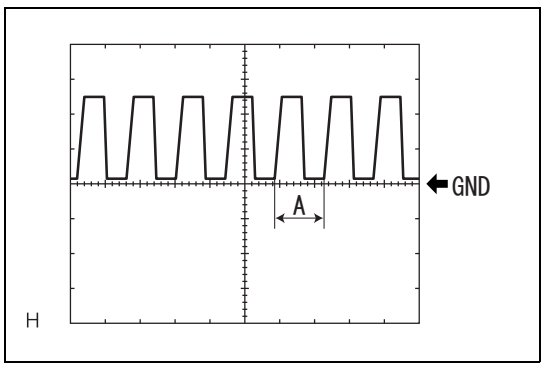

(2) Waveform 1

Item	Contents
Inspection terminals	D6-14 ←→Chassis ground
Equipment setting	5V/DIV, 5ms/DIV
Inspection conditions	IG ON, light control switch is AUTO, automatic control sensor is covered by something that doesn't let light through →exposed

*: When there is auto light control

NOTE:

The brighter the area becomes, the shorter the A interval becomes.

LE

Data monitor / active test

1. Inspection with SSM4
   (1) Data monitor
      (a)Use the SSM4 and data monitor to determine functionality and narrow down the defective part.

SSM4 screen: [Each System] →[Body Control] →[Data monitor]

Item name	Description/display range	Normal value	Remarks
[Ignition]	Status of the IG signal Display range: OFF - ON	OFF: IG OFF ON: IG ON	-
[ACC SW]	Status of the ACC signal Display range: OFF - ON	OFF: ACC OFF ON: ACC ON	-
[Dimmer]	Headlight dimmer switch (HI) status Display range: OFF - ON	OFF: Dimmer switch is OFF ON: Dimmer switch is HI	-
[Passing Light SW]	Headlight dimmer switch (flashing) status Display range: OFF - ON	OFF: Headlight dimmer switch (flashing) is OFF ON: Headlight dimmer switch (flashing) is ON	-
[Lighting I Lamp Output]	Light control switch (TAIL) status Display range: OFF - ON	OFF: Light control switch (TAIL) is OFF ON: Light control switch (TAIL) is ON	-
[Lighting II Lamp Output]	Light control switch (HEAD) status Display range: OFF - ON	OFF: Light control switch (HEAD) is OFF ON: Light control switch (HEAD) is ON	-
[Lighting Hi Lamp Output]	Headlight HI beam status Display range: OFF - ON	OFF: Normal ON: Headlight HI beam lights up	-
[Front Fog Light SW]	Front fog light switch status Display range: OFF - ON	OFF: Front fog light switch is OFF ON: Front fog light switch is ON	-
[Front Fog Lamp Output]	Front fog lights status Display range: OFF - ON	OFF: Front fog light is OFF ON: Front fog light is ON	-
[Auto Light SW]	Light control switch (AUTO) status Display range: OFF - ON	OFF: Light control switch is OFF ON: Light control switch is AUTO	-
[Head Light Switch (H)]	Light control switch (HEAD) status Display range: OFF - ON	OFF: Light control switch is OFF ON: Light control switch is HEAD	-
[Tail Light Switch (T)]	Light control switch (TAIL) status Display range: OFF - ON	OFF: Light control switch is OFF ON: Light control switch is TAIL	-
[D Door Courtesy]	Driver's seat door courtesy light switch status Display range: [Open]-[Close]	Open: Open the driver's door. Closed: Close the driver's door.	-
[Illumination Rate Info]	Automatic light control sensor status Display range: 0to 65535	Outputs a number according to the brightness (in units of lx)	If there is no light, 0 will be displayed.
[Sensitivity]	Sensitivity of the automatic light control system / Light2, Light1, Normal, Dark1 or Dark2	Customize setting displayed	-
[DRL Function]	DRL function / ON or OFF	Customize setting displayed	-
[DRL Output]	DRL output / ON or OFF	ON: DRL output OFF: Normal	-
[Light Auto OFF Delay]	Light auto OFF delay / Off, 30 s,60 s or 90 s	Customize setting displayed	-
[Welcome Light Off Delay Time (Approaching)]	Welcome Light Off Delay Time (Approaching) / OFF, 30 s, 60 s, or 90 s	Customize setting displayed	-
[Auto Dimmer Cancel Setting]	Auto Dimmer Cancel Setting / 0, 1, 2, 3, 4 or 5	Customize setting displayed	-
[Wiper Link Auto Light Setup]	Wiper Link Auto Light Setup / ON or OFF	Customize setting displayed	-
[Lane Change Signal Setting]	Lane Change Signal Setting / ON or OFF	Customize setting displayed	-
[Left turn signal input]	Left turn signal switch status Display range: OFF - ON	OFF: Left turn signal switch OFF ON: Left turn signal switch ON	-
[Right turn signal input]	Right turn signal switch status Display range: OFF - ON	OFF: Right turn signal switch OFF ON: Right turn signal switch ON	-
[Hazard switch input]	Hazard switch status Display range: OFF - ON	OFF: Hazard switch OFF ON: Hazard switch ON	-

CAUTION:
Items without settings are not displayed in the SSM4 or do not function.

   (2) Active test
      (a)Use the SSM4 to conduct an active test and determine functionality and narrow down the defective part.

SSM4 screen: [Each System] →[Body Control] →[Active Test]

Item name	Item description	Drive
[Daytime Running Light]	Daytime running lights	ON/OFF

Item name	Item description	Drive
[Taillight Relay]	Turn on the tail lights.	OFF - ON
[Headlight Relay]	Turn on the headlight LO beams.	OFF - ON
[Head Light Hi]	Turn on the headlight HI beams.	OFF - ON
[Front Fog Lamp Output]	Turn on the front fog lights.	OFF - ON

*1: Perform operation confirmation when the tail lights are on.
CAUTION:
Items without settings are not displayed in the SSM4 or do not function.

DTC	B1244	Malfunction in the auto light sensor

Circuit description
The automatic light control sensor converts the detected brightness of its surrounding area into an electric signal and outputs that to the main body ECM (network gateway computer). Based on that signal, the main body ECM (network gateway computer) turns the headlights and tail lights on and off.

DTC NO.	Diagnosis contents	Inspection parts
B1244	IG ON, light control switch is AUTO and abnormal light sensor brightness signal input detected	• Automatic light control sensor • Main body ECM (Network gateway computer) • Vehicle wiring harnesses and connectors (sensor input system)

Circuit figure

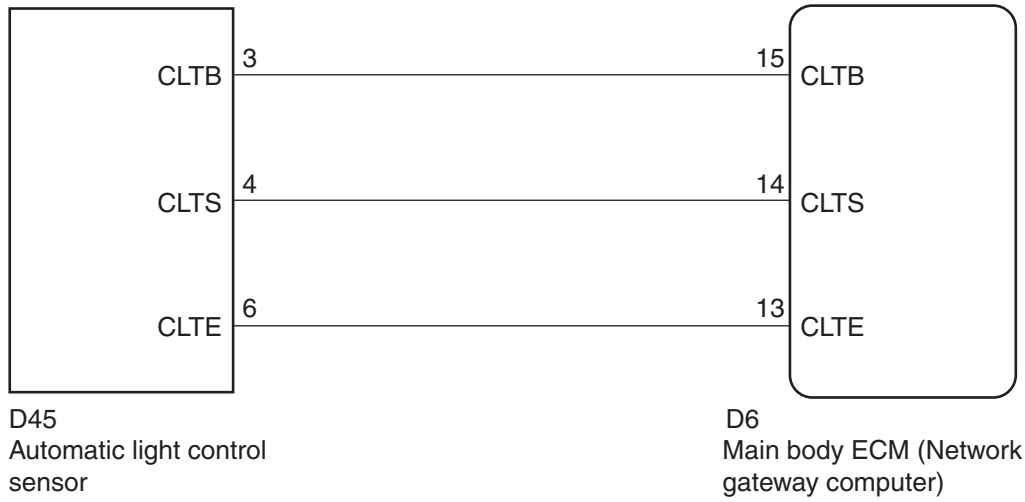

Inspection steps

1	Reading of SSM4 data monitor

(1) Using the SSM4, follow the display and read the data monitor. (Refer to LE - 22)

SSM4 screen: [Each System] →[Body Control] →[Data monitor]

Item name	Description/display range	Normal value	Remarks
[Illumination Rate Info]	Automatic light control sensor status Display range: 0 to 65535	Outputs a number according to the brightness (in units of lx)	-

Criteria: The normal value on the data monitor is displayed properly.

(2) When the light control switch is set to AUTO, and you cover the automatic control sensor with something that doesn't let light through, then expose it, inspect if the number for the Illumination Rate Info changes within the displayed range.

Result

Item	Go to
Malfunction	A
Normal	B

B → Go to "How to simulate trouble phenomenon" (Refer to IN - 32)

A

2	Inspection of wiring harnesses and connections (main body ECM (multiplex network body computer) - automatic light control sensor)

(1) Disconnect the connector D6 for the main body ECM (network gateway computer).
(2) Disconnect the connector D45 of the automatic light control sensor.
(3) Measure the resistance between the terminals.

Resistance (open circuit check)

Inspection terminals (Terminal symbol)	Inspection conditions	Standard value
D6-13 (CLTE) - D45-6 (CLTE)	Always	Less than 1 Ω
D6-14 (CLTS) - D45-4 (CLTS)	Always	Less than 1 Ω
D6-15 (CLTB) - D45-3 (CLTB)	Always	Less than 1 Ω

Resistance (short circuit check)

Inspection terminals (Terminal symbol)	Inspection conditions	Standard value
D6-13 (CLTE) - chassis ground	Always	10 kΩ or more
D6-14 (CLTS) - chassis ground	Always	10 kΩ or more
D6-15 (CLTB) - chassis ground	Always	10 kΩ or more

NG → Repair or replacement of wiring harness or connector

OK

LE

3	Unit inspection of the main body ECM (network gateway computer)

(1) Connect the connector D6 of the main body ECM (network gateway computer).

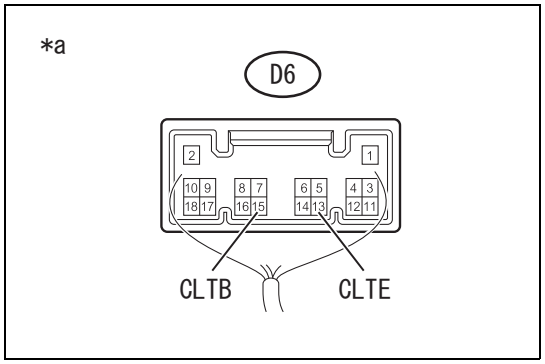

(2) Measure the voltage between the terminals.
CAUTION:
With the connectors connected, perform this inspection from the rear of the connectors.
Voltage

Inspection terminals (Terminal symbol)	Inspection conditions	Standard value
D6-13 (CLTE) - D6-15 (CLTB)	IG ON	11 to 14 V

Captions in illustration

*a	Connector connected (Main body ECM (network gateway computer))

NG → Replacement of the main body ECM (network gateway computer) (Refer to PD - 25)

OK

4	Inspection of the automatic light control sensor

(1) Perform an on-vehicle inspection of the automatic light control sensor. (Refer to LE - 82)

NG → Replacement of the automatic light control sensor (Refer to LE - 81)

OK

Replacement of the main body ECM (network gateway computer) (Refer to PD - 25)

Low beam headlight circuit

Circuit description

The turning on and off of the low beam headlights is controlled by the main body ECM (network gateway computer).

Circuit figure

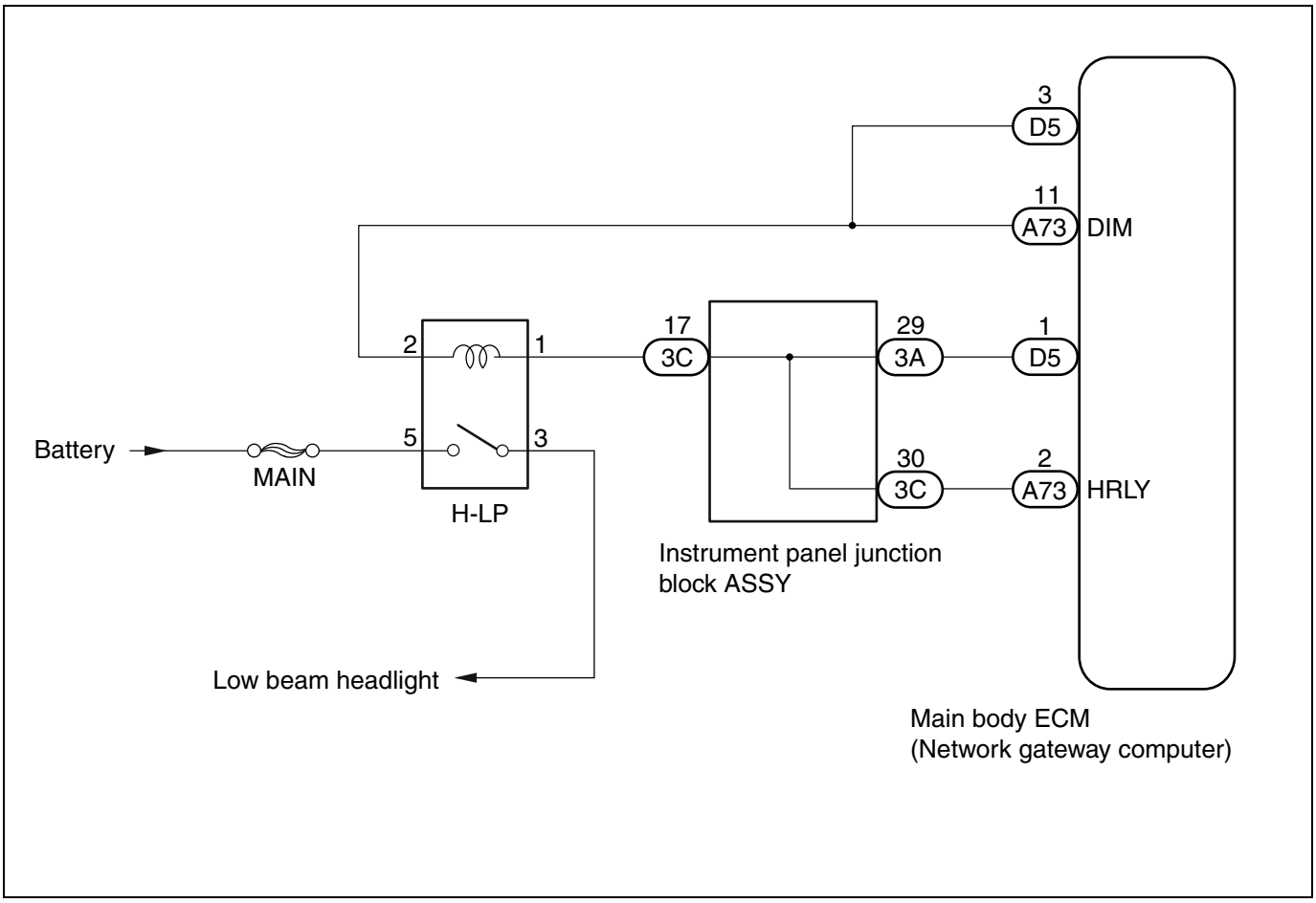

Inspection steps

CAUTION:

Before performing the troubleshooting, check the fuse of this circuit.

1	Implementation of SSM4 active test

(1) Using SSM4, perform an active test by following the display. (Refer to LE - 22)

SSM4 screen: [Each System] →[Body Control] →[Active Test]

Item name	Item description	Drive
[Headlight Relay]	Turn on the headlight LO beams.	OFF - ON

Criteria: The active test can be performed properly.

Result: The low beam headlights turn on.

NG → Go to Step 2.

OK →

Replacement of the main body ECM (network gateway computer) (Refer to PD - 25)

LE

2	Unit inspection for the headlight relay (H-LP relay)

(1) Remove the H-LP relay from the engine compartment relay block ASSY.
(2) Perform the unit inspection of the H-LP relay. (Refer to LE - 89)

NG → Replacement of the H-LP relay.

OK

3	Inspection of wiring harnesses and connectors (H-LP relay - battery)

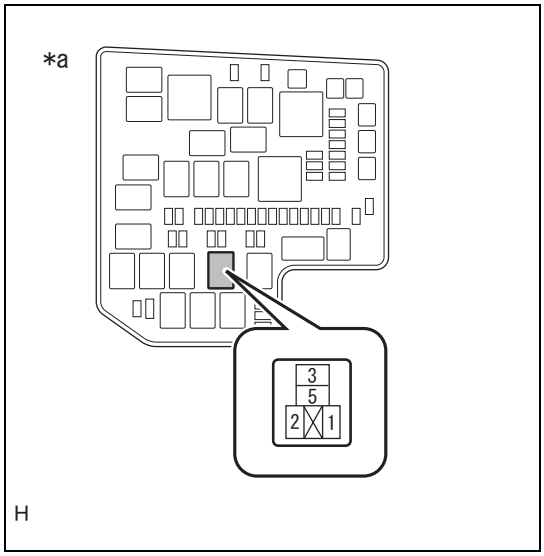

(1) Measure the voltage between the terminals.
Voltage

Inspection terminals	Inspection conditions	Standard value
Relay connection terminal 5 - chassis ground	Always	11 to 14 V

Captions in illustration

*a	Engine compartment relay block ASSY (H-LP relay connector)

NG → Repair or replacement of wiring harness or connector

OK

4	Inspection of wiring harnesses and connectors (H-LP relay - main body ECM (network gateway computer))

(1) Disconnect the A73 connector of the main body ECM (network gateway computer).
(2) Measure the resistance between the terminals.
Resistance (open circuit check)

Inspection terminals (Terminal symbol)	Inspection conditions	Standard value
Relay connection terminal 2 - A73-11 (DIM)	Always	Less than 1 Ω

Resistance (short circuit check)

Inspection terminals	Inspection conditions	Standard value
A73-11 (DIM) - chassis ground	Always	10 kΩ or more

NG → Repair or replacement of wiring harness or connector

OK

LE

5	Inspection of wiring harnesses and connectors (H-LP relay - instrument panel junction block ASSY)

(1) Disconnect the connector 3C of the instrument panel junction block ASSY.
(2) Measure the resistance between the terminals.

Resistance (open circuit check)

Inspection terminals	Inspection conditions	Standard value
Relay connection terminal 1 - 3C-17	Always	Less than 1 Ω

Resistance (short circuit check)

Inspection terminals	Inspection conditions	Standard value
3C-17 - chassis ground	Always	10 kΩ or more

NG → Repair or replacement of wiring harness or connector

OK

6	Inspection of wiring harnesses and connectors (instrument panel junction block ASSY - main body ECM (network gateway computer))

(1) Disconnect the connector 3A of the instrument panel junction block ASSY and the connector D5 of the main body ECM (network gateway computer).
(2) Measure the resistance between the terminals.

Resistance (open circuit check)

Inspection terminals	Inspection conditions	Standard value
3A-29 - D5-1	Always	Less than 1 Ω
3C-30 - A73-2 (HRLY)	Always	Less than 1 Ω

Resistance (short circuit check)

Inspection terminals	Inspection conditions	Standard value
D5-1 - chassis ground	Always	10 kΩ or more

NG → Repair or replacement of wiring harness or connector

OK

LE

7	Inspection of the instrument panel junction block ASSY.

(1) Remove the instrument panel junction block ASSY from the vehicle. (Refer to PD - 25)
(2) Remove the main body ECM (network gateway computer) from the instrument panel junction block ASSY.
(3) Measure the resistance between the terminals.

*a

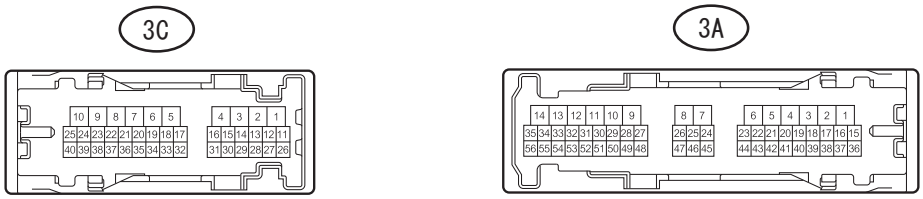

Resistance

Inspection terminals	Inspection conditions	Standard value
3C-17 - 3A-29	Always	Less than 1 Ω
3C-17 - 3C-30	Always	Less than 1 Ω

Captions in illustration

*a	Connector not connected (Instrument panel junction block ASSY)	-	-

NG → Replacement of the instrument panel junction block ASSY (Refer to PD - 25)

OK

See the next circuit for inspection shown on the symptom table. (Refer to LE - 7)

High beam headlight circuit

Circuit description

The turning on and off of the high beam headlights is controlled by the main body ECM (network gateway computer).

Circuit figure

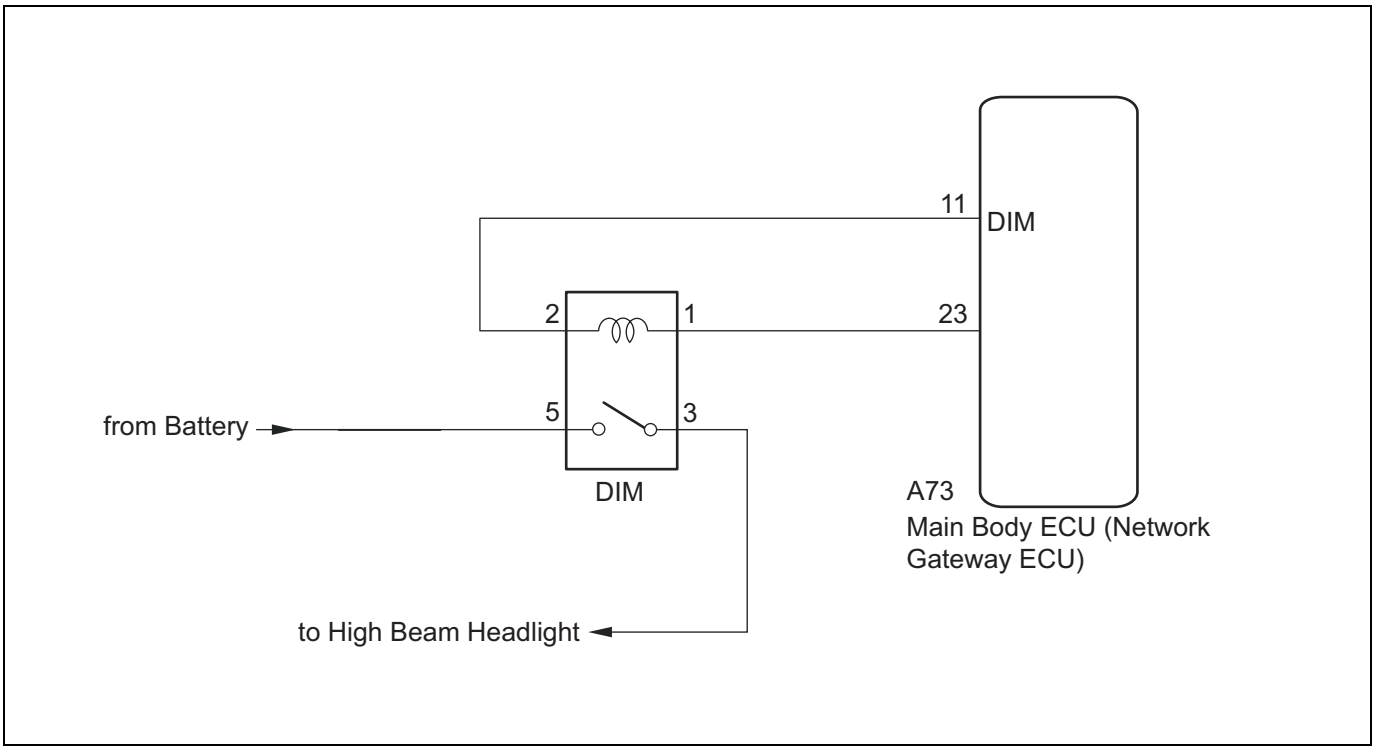

Inspection steps

CAUTION:

Before performing the troubleshooting, check the fuse of this circuit.

1	Implementation of SSM4 active test

(1) Using SSM4, perform an active test by following the display. (Refer to LE - 22)

SSM4 screen: [Each System] →[Body Control] →[Active Test]

Item name	Item description	Drive
[Head Light Hi]	Turn on the headlight HI beams.	OFF - ON

Criteria: The active test can be performed properly.

Result: The high beam headlights turn on.

NG → Go to Step 2.

OK

LE

Replacement of the main body ECM (network gateway computer) (Refer to PD - 25)

2	Unit inspection for the headlight dimmer relay (DIM relay)

(1) Remove the DIM relay from the engine compartment relay block ASSY.

(2) Perform the unit inspection of the DIM relay. (Refer to LE - 89)

NG → Replacement of the headlight dimmer relay (DIM relay)

OK

3	Inspection of the wiring harnesses and connectors (DIM relay - battery)

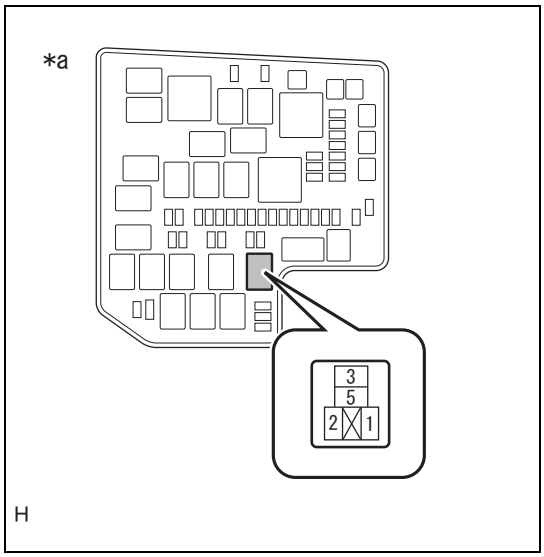

(1) Measure the voltage between the terminals.
Voltage

Inspection terminals	Inspection conditions	Standard value
Relay connection terminal 5 - chassis ground	IG OFF	11 to 14 V

Captions in illustration

*a	Engine compartment relay block ASSY (DIM relay connector)

NG → Repair or replacement of wiring harness or connector

OK

4	Inspection of wiring harnesses and connectors (DIM relay - main body ECM (network gateway computer))

(1) Disconnect the A73 connector of the main body ECM (network gateway computer).
(2) Measure the resistance between the terminals.
Resistance (open circuit check)

Inspection terminals (Terminal symbol)	Inspection conditions	Standard value
Relay connection terminal 2 - A73-11 (DIM)	Always	Less than 1 Ω
Relay connection terminal 1 - A73-23	Always	Less than 1 Ω

Resistance (short circuit check)

Inspection terminals (Terminal symbol)	Inspection conditions	Standard value
A73-11 (DIM) - chassis ground	Always	10 kΩ or more
A73-23 - chassis ground	Always	10 kΩ or more

NG → Repair or replacement of wiring harness or connector

OK

See the next circuit for inspection shown on the symptom table. (Refer to LE - 7)

LE

Tail light circuit

Circuit description

The turning on and off of the tail lights, the clearance lights, and the license plate light is controlled by the main body ECM (network gateway computer).

Circuit figure

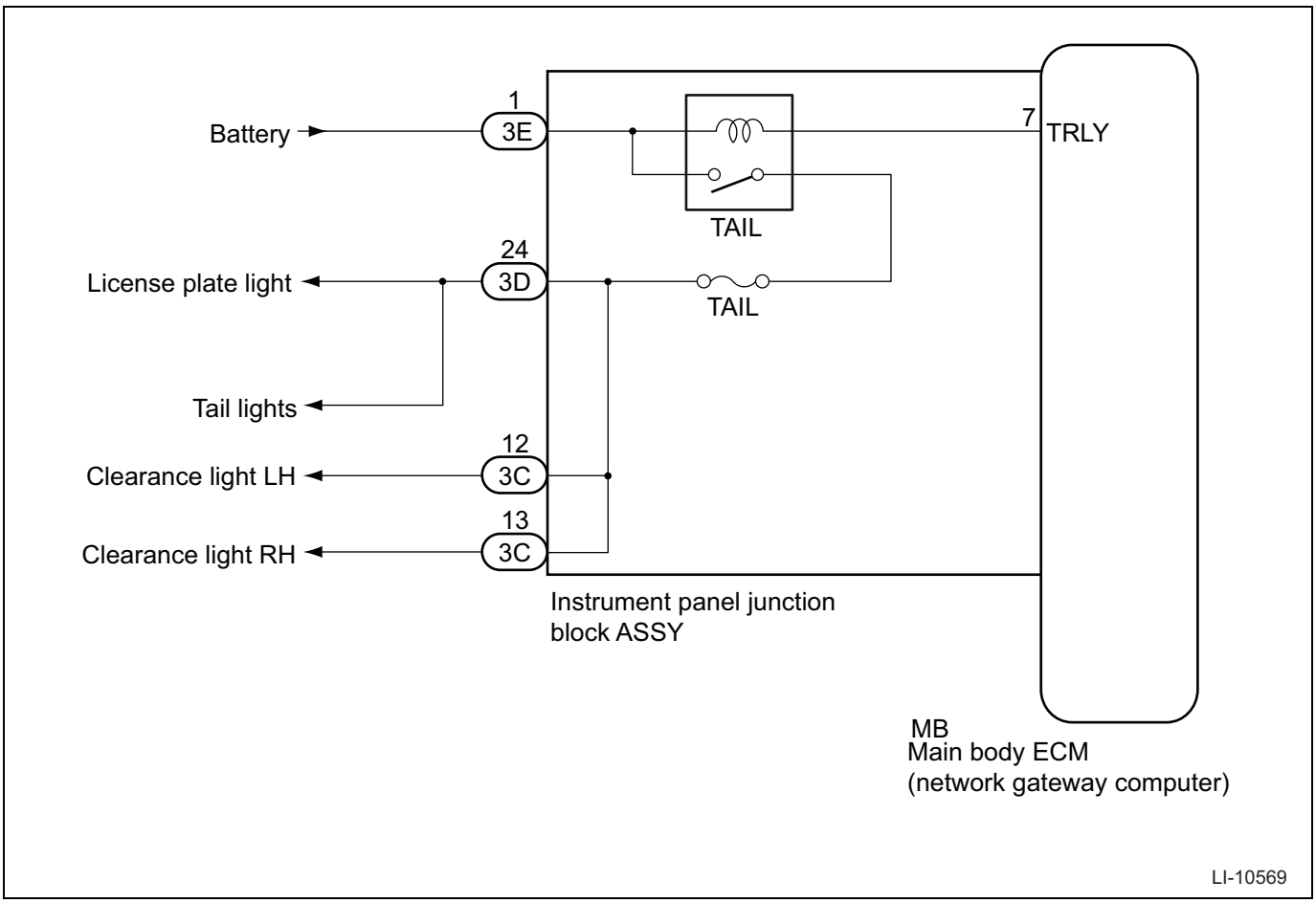

Inspection steps

CAUTION:

Before performing the troubleshooting, check the fuse of this circuit.

1	Implementation of SSM4 active test

LE

(1) Using SSM4, perform an active test by following the display. (Refer to LE - 22)

SSM4 screen: [Each System] →[Body Control] →[Active Test]

Item name	Item description	Drive
[Taillight Relay]	Turn on the tail lights.	OFF - ON

Criteria: The active test can be performed properly.

(2) Check that the tail lights, the clearance lights, and the license plate light turn on properly.

Result

Result	Go to
All the tail lights, the clearance lights, and the license plate light don't turn on.	A

Result	Go to
All the tail lights, the clearance lights, and the license plate light turn on.	B

B → Replacement of the main body ECM (network gateway computer) (Refer to PD - 25)

A

2 Inspection of the wiring harnesses and connectors (battery - instrument panel junction block ASSY)

(1) Disconnect the connector 3E of the instrument panel junction block ASSY.

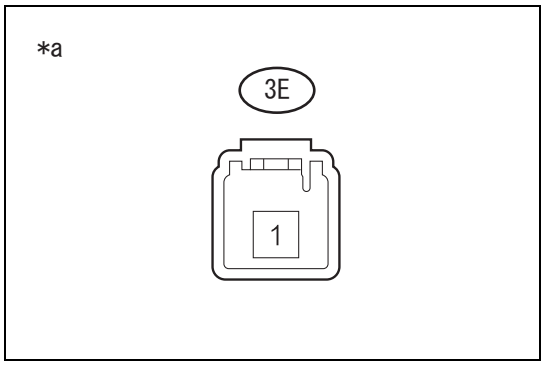

(2) Measure the voltage between the terminals.
Voltage

Inspection terminals	Inspection conditions	Standard value
3E-1 - chassis ground	Always	11 to 14 V

Captions in illustration

*a	Connector not connected (Instrument panel junction block ASSY)

NG → Repair or replacement of wiring harness or connector

OK

3 Inspection of the instrument panel junction block ASSY.

(1) Remove the instrument panel junction block ASSY from the vehicle. (Refer to PD - 25)
(2) Remove the main body ECM (network gateway computer) from the instrument panel junction block ASSY.

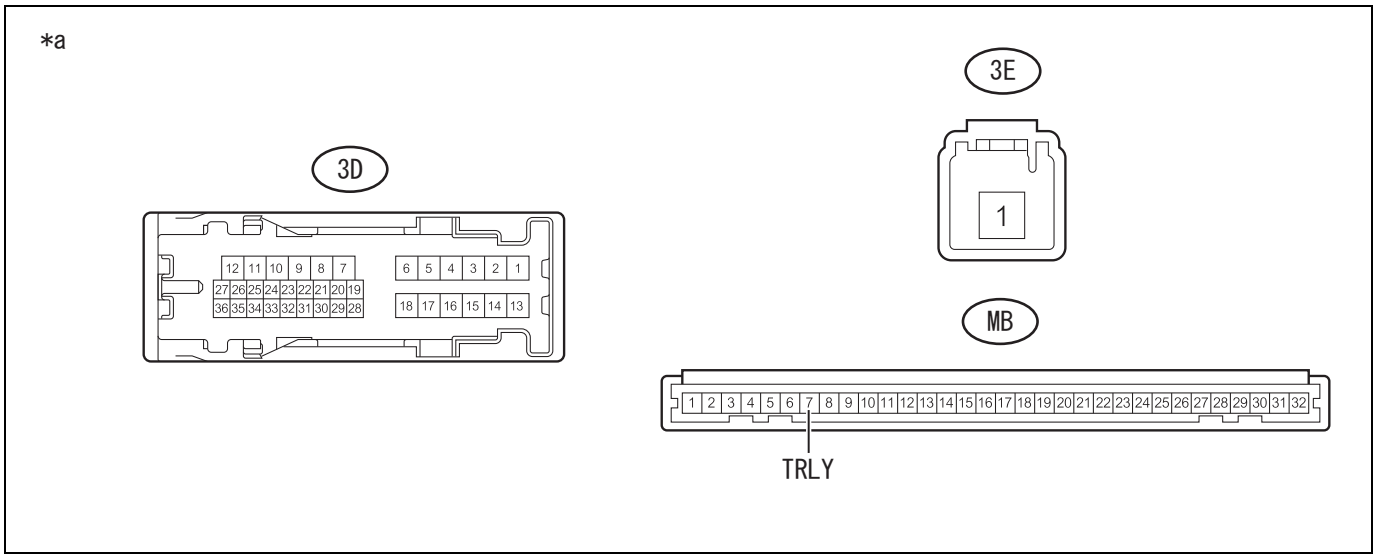

Captions in illustration

*a	Connector not connected (Instrument panel junction block ASSY)	-	-

(3) Measure the resistance between the terminals.

LE

Resistance

Inspection terminals	Inspection conditions	Standard value
3E-1 - 3D-24	Always	10 kΩ or more

(4) Measure the voltage between the terminals when battery voltage is applied between the terminals.

Voltage

Inspection terminals	Inspection conditions	Standard value
3C-12 - Battery negative (-) terminal	Connect a positive (+) lead from the battery 3E-1Connect a negative (-) lead from the battery MB-7 (TRLY)	11 to 14 V
3C-13 - Battery negative (-) terminal	Connect a positive (+) lead from the battery 3E-1Connect a negative (-) lead from the battery MB-7 (TRLY)	11 to 14 V
3D-24 - chassis ground	Battery positive →3E-1 Battery ground →MB-7 (TRLY)	11 to 14 V

NG → Replacement of the instrument panel junction block ASSY (Refer to PD - 25)

OK

See the next circuit for inspection shown on the symptom table. (Refer to LE - 7)

Headlight dimmer switch circuit

Circuit description

The main body ECM (network gateway computer) receives the light control switch signal, the dimmer switch signal, and the fog switch signal from the headlight dimmer switch ASSY.

Circuit figure

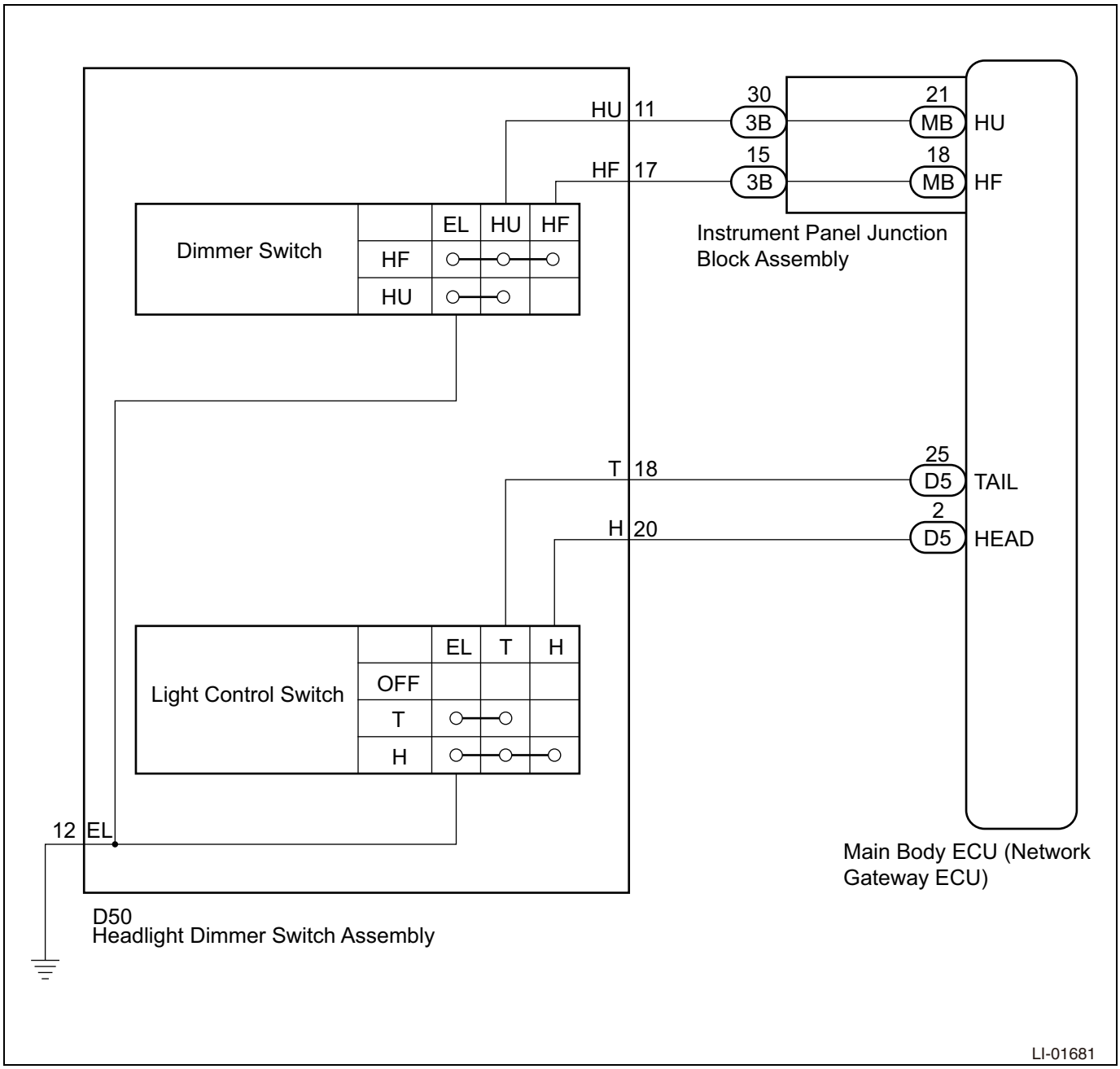

Inspection steps

1	Reading of SSM4 data

LE

(1) Using the SSM4, follow the display and read the data monitor. (Refer to LE - 22)

SSM4 screen: [Each System] →[Body Control] →[Data monitor]

Item name	Description/display range	Normal value	Remarks
[Dimmer]	Dimmer switch (HI) status Display range: OFF - ON	OFF: Dimmer switch is OFF ON: Dimmer switch is HI	-
[Passing Light SW]	Dimmer switch (flashing) status Display range: OFF - ON	OFF: Dimmer switch is OFF ON: Dimmer switch (flashing) is ON	-
[Head Light Switch (H)]	Light control switch (HEAD) status Display range: OFF - ON	OFF: Light control switch is OFF ON: Light control switch is HEAD	Check when the vehicle is in IG ON.

Item name	Description/display range	Normal value	Remarks
[Tail Light Switch (T)]	Light control switch (TAIL) status Display range: OFF - ON	OFF: Light control switch is OFF ON: Light control switch is TAIL	-

Criteria: The normal value on the data monitor is displayed properly.

Result

Item	Go to
OK	A
NG (Dimmer switch)	B
NG (light control switch)	C

B → Go to Step 2.

C → Go to Step 4.

A

Replacement of the main body ECM (network gateway computer) (Refer to PD - 25)

2 Unit inspection of the headlight dimmer switch ASSY

(1) Remove the headlight dimmer switch ASSY. (Refer to LE - 72)
(2) Perform the unit inspection of the headlight dimmer switch ASSY. (Refer to LE - 74)

NG → Replacement of the headlight dimmer switch ASSY (Refer to LE - 72)

OK

3 Inspection of the wiring harnesses and the connectors (headlight dimmer switch ASSY - instrument panel junction block ASSY)

(1) Disconnect the connector 3B of the instrument panel junction block ASSY.
(2) Measure the resistance between the terminals.

Resistance (open circuit check)

Inspection terminals (Terminal symbol)	Inspection conditions	Standard value
D50-17(HF) - 3B-15	Always	Less than 1 Ω
D50-11(HU) - 3B-30	Always	Less than 1 Ω

Resistance (short circuit check)

Inspection terminals (Terminal symbol)	Inspection conditions	Standard value
D50-17 (HF) - chassis ground	Always	10 kΩ or more
D50-11 (HU) - chassis ground	Always	10 kΩ or more

NG → Repair or replacement of wiring harness or connector

OK

See the next circuit for inspection shown on the symptom table. (Refer to LE - 7)

4	Unit inspection of the headlight dimmer switch ASSY

(1) Remove the headlight dimmer switch ASSY. (Refer to LE - 72)
(2) Perform the unit inspection of the headlight dimmer switch ASSY. (Refer to LE - 74)

NG → Replacement of the headlight dimmer switch ASSY (Refer to LE - 72)

OK

5	Inspection of wiring harnesses and connectors (headlight dimmer switch ASSY - main body ECM (network gateway computer))

(1) Disconnect the connector MB and D5 of the main body ECM (network gateway computer).
(2) Measure the resistance between the terminals.

Resistance (open circuit check)

Inspection terminals (Terminal symbol)	Inspection conditions	Standard value
D50-20(H) - D5-2 (HEAD)	Always	Less than 1 Ω
D50-18(T) - D5-25 (TAIL)	Always	Less than 1 Ω

Resistance (short circuit check)

Inspection terminals (Terminal symbol)	Inspection conditions	Standard value
D50-20 (H) - chassis ground	Always	10 kΩ or more
D50-18 (T) - chassis ground	Always	10 kΩ or more

NG → Repair or replacement of wiring harness or connector

OK

See the next circuit for inspection shown on the symptom table. (Refer to LE - 7)

Auto leveling system

Precautions

1. Precautions during headlight beam adjustment
   (1) If using a cover when the headlights are on, do not perform for 3 minutes or more.
   (2) Because the headlight outer lens is made of plastic, performing the adjustment for a long time will cause heat that may cause disfiguration.
2. Precautions when handling models with head light auto leveling
   (1) The initialization procedure is necessary when removing, installing, or replacing the height control sensor RR LH, when performing a procedure that changes the height of the vehicle, such as replacing the suspension, and when replacing the headlight leveling computer ASSY.
   NOTE:
   Refer to LE - 38for initialization.
   (2) When repairing or replacing the suspension, be sure to do so after removing the height control sensor RR LH.

Function inspection

1. Before troubleshooting
   (1) Basic inspection
   (a)Inspect the battery voltage.
   Standard value: 11 to 14 V (when the engine is stopped)
   (2) Inspect for blown fuses, wiring harnesses open circuit, short circuits, and poor contact of connectors, in places where you can inspect visually.
2. Inspection of the headlight auto leveling
   (1) In IG ON, with the light control switch in the HEAD position and the vehicle stopped, change the vehicle posture. Maintain that status for 3 seconds or more, and check that the beams move.
   CAUTION:
   Change the vehicle height slowly.

Registration settings

1. Initialization procedure for the headlight leveling computer ASSY
   CAUTION:
   Perform initialization using the following procedure when removing, installing, or replacing the height control sensor RR LH, when performing a procedure that changes the height of the vehicle, such as replacing the suspension, and when replacing the headlight leveling computer ASSY.
   NOTE:
   When initializing the headlight leveling computer ASSY, the amount of fuel shown on the scales of the fuel receiver gauge is broken into 5 levels, and processing is performed based on the amount of fuel at that time.
   (1) Checking the vehicle condition (*1)
   (a)Put the vehicle in the following condition.
   - Remove any loadable luggage from the vehicle. (The spare tire and on-board tools are mounted on the vehicle.)
   - There are no passengers in the vehicle.
   - Turn off the headlights.
   - Vehicle is stopped, and the vehicle height does not change. (Vehicle posture is stable on a level surface.)

   NOTE:
   Initialization cannot be normally performed unless above-mentioned conditions are all satisfied.
   (2) Checking the warning display
   (a)3 seconds after IG OFF →ON, check the warning display of the headlight leveling warning light in the combination meter ASSY.

Criteria

Operation contents	Warning display
Replacement (new one) or initialization error of the headlight leveling computer ASSY	Continues blinking 6 times at 2 Hz
Replacement or removal/installation of the height control sensor RR LH, or suspension replacement, etc.	OFF

NOTE:
If it is outside the specification, check the headlight leveling computer ASSY, the height control sensor RR LH, and the wiring harnesses and connectors.

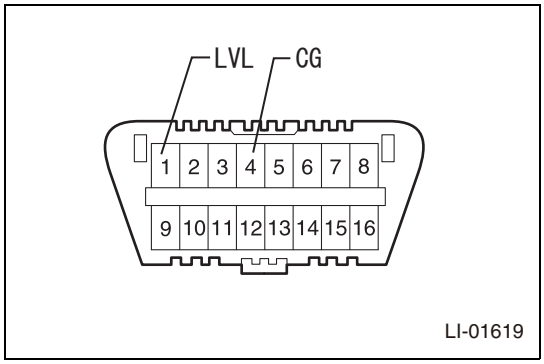

(3) Initialization operation
(a)Turn the ignition switch to ON.
(b)Using the SST, short-circuit 1 (LVL) to 4 (CG) of DLC3.
SST 09843-18040

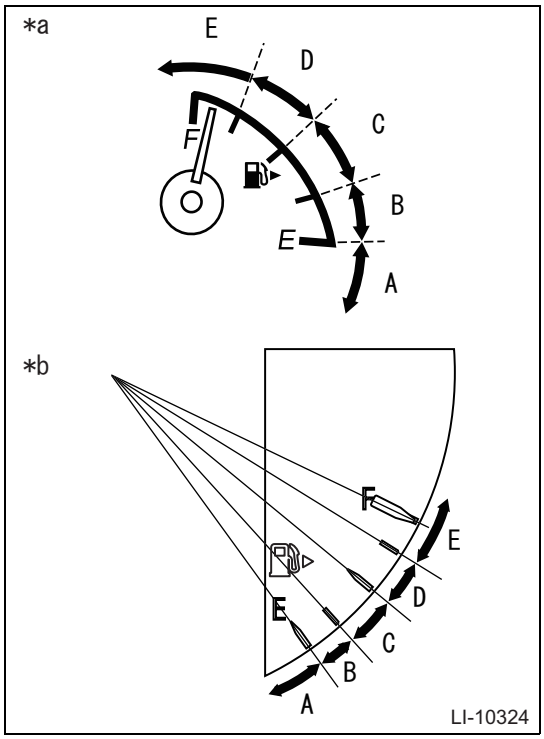

(c)Based on the position of the indicator of the fuel receiver gauge (amount of remaining fuel), determine the applicable number of times to operate the light control switch using the following chart.
Indicator position

Remaining amount in the scales	Number of times to operate the light control switch
Indicator is in range A	1 time
Indicator is in range B	2 times
Indicator is in range C	3 times
Indicator is in range D	4 times
Indicator is in range E	5 times

Captions in illustration

*a	Normal meter
*b	TFT meter

(d)After short-circuiting the initialization terminals, turn the light control switch OFF →HEAD →OFF for the number N(*2)of times.
NOTE:
- *2: N is the number of times to operate the light control switch determined based on the position of the indicator of the fuel receiver gauge.
- Start operating the switch within 20 seconds after short-circuiting the initialization terminals.
- Operate the switch approx. at 3-second intervals.

(e)After operating the light control switch, check the warning display 3 seconds later.

LE

Result

Operation contents	Warning display	Result
Replacement of the headlight leveling computer ASSY (new)	Blinks 6 times at 2 Hz →Continues blinking N(*3) times at 2 Hz	Initialization completed normally
	Continues blinking 6 times at 2 Hz	Initialization error
Replacement or removal/installation of the height control sensor RR LH, or suspension replacement, etc.	No blinking →Continues blinking N(*3) times at 2 Hz	Initialization completed normally
	Continues blinking 6 times at 2 Hz	Initialization error

NOTE:
- *3: N is the number of times the light control switch was operated.

- For initialization errors, the headlight leveling warning light in the combination meter ASSY turns on.
- If the number of times the warning light blinks and the number of times the switch was operated are different, initialization was not completed normally.
- If it was not completed normally (initialization error), start over from (*1).

(f) Once the normal completion of the initialization is confirmed, turn the ignition switch to OFF.

NOTE:

Blinking from initialization completing normally continues until IG OFF.

Parts location

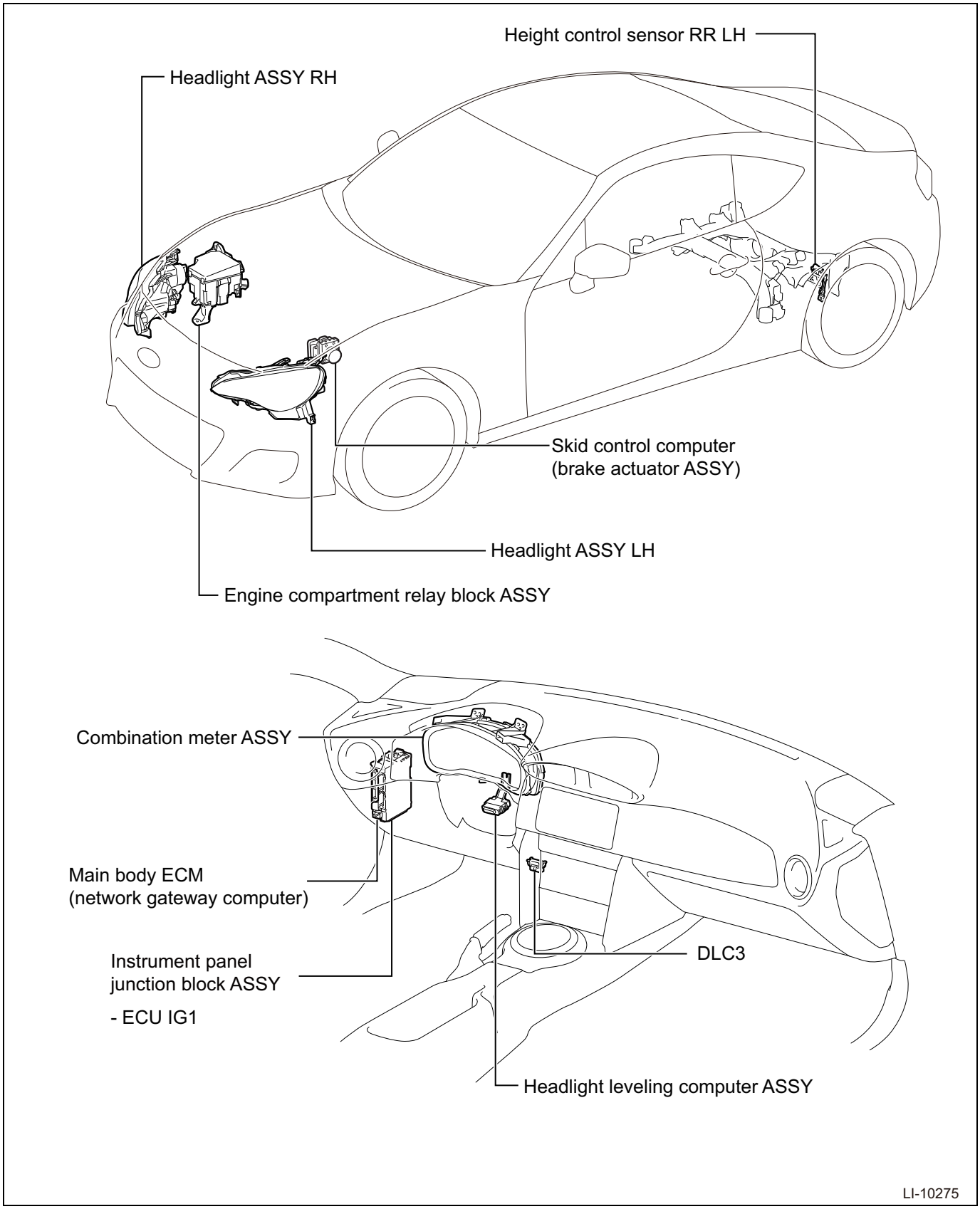

LE

Symptom table

Auto leveling control

Symptoms	Inspection items	Reference pages
Beam control is not performed.	Failsafe function	LE - 46
	ECM IG1 fuse	LE - 41
	Height control sensor RR LH	LE - 41
	Headlight leveling motor circuit	LE - 47
	Headlight leveling computer ASSY	-
When IG OFF →ON, the headlight auto leveling warning light does not turn on (beam control is normal).	Headlight leveling computer ASSY	-
	Combination meter ASSY	-
	Vehicle wiring harness and connector	-
The headlight auto leveling warning light turns on.	Failsafe function	LE - 46
	Height control sensor RR LH	LE - 41
	Headlight leveling computer ASSY	-
	Combination meter ASSY	-
	Vehicle wiring harness and connector	-

How to troubleshoot

1	Bring in the car

Next

2	Interview and phenomenon check

Next

3	Symptom table

NOTE:
Refer to LE - 42.

Result	Go to
Not applicable to the symptom table.	A
Applicable to the symptom table.	B

B → Go to Step 5.

A

4	Based on the trouble phenomenon, perform troubleshooting following the steps below.

(1) Function inspection (Refer to LE - 38)
(2) ECM terminal arrangement (Refer to LE - 46)
(3) Failsafe list (Refer to LE - 46)
(4) On-vehicle inspection
(5) Unit inspection

Next

LE

5	Adjustment, repair, or replacement

Next

6	Confirmation test

Next

Complete

Check list for interview

Auto Leveling System Diagnosis Checklist for interview

Year Month Date

Customer's name		V.I.N.		Registration date	
		Vehicle model		Frame No.	
Interviewer		Inspector		Engine type		Odometer reading km	

Customer specified content

Date and time when the trouble occurred (When)	Year Month Date Time
Frequency of trouble occurrence	Continuous / Sometimes occurs (times per day, times per month)
Condition of trouble occurrence	

Weather	Fine, Cloudy, Rainy, Snowy, Others: ( )	Outside temp.	Approx. °C(°F)
Road	Inner city, Suburbs, Highway, Others: ( )		Paved road • Unpaved road

Trouble symptom	Beam level control	

Confirmation of diagnostic code	Equipment	Initial DTC	Second DTC

LI-01618

Circuit figure

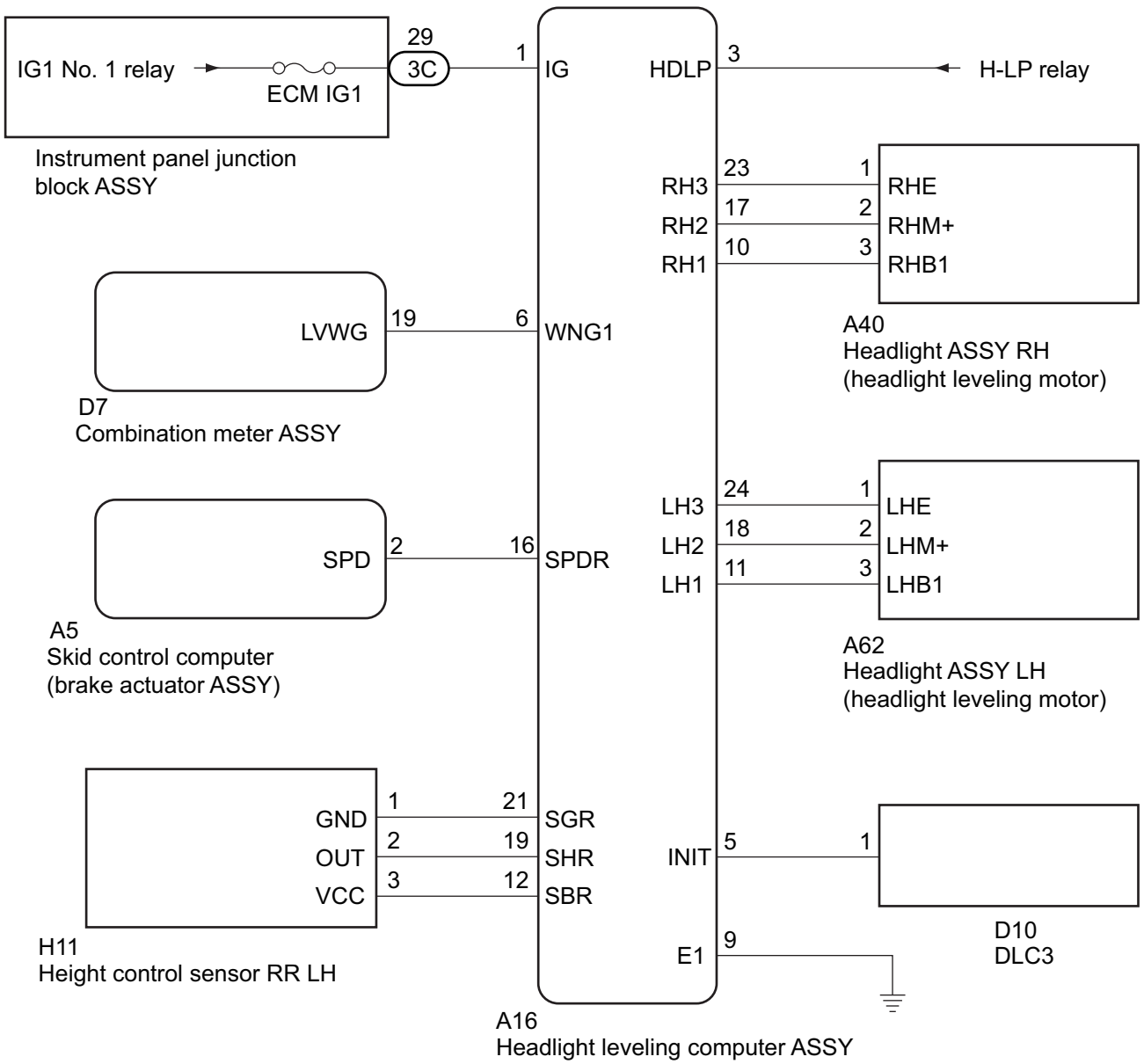

LE

ECM terminal arrangement

1. Headlight leveling computer ASSY

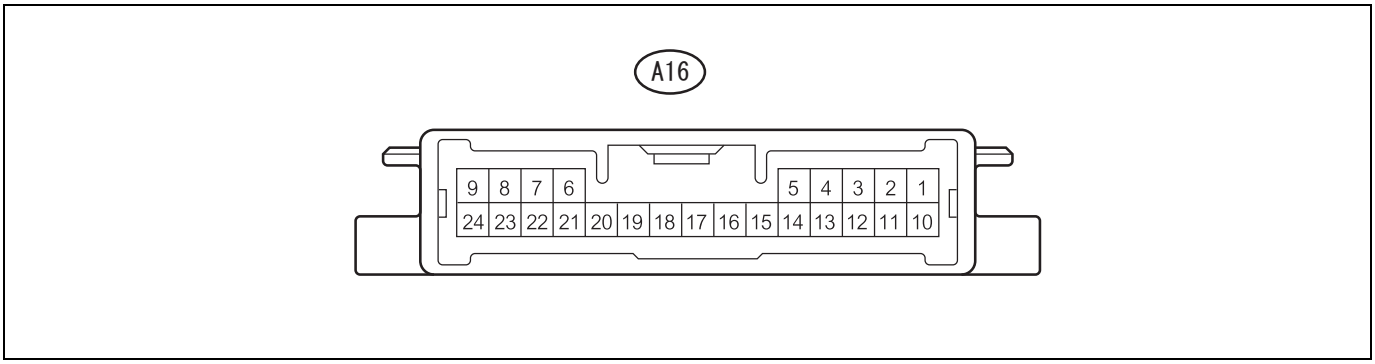

Standard value

Inspection terminals (Terminal symbol)	Measuring conditions	Standard value
A16-1 (IG) ←→A16-9 (SHR)	IG ON	11 to 14 V
A16-3 (HDLP) ←→A16-9 (SHR)	Headlights off →on	5 V or more →1.5 V or less
A16-5 (INIT) ←→A16-9 (SHR)	Always (Initialization signal input terminal)	Approx. 5 V
A16-6 (WNG) ←→A16-9 (SHR)	After IG ON, 3 seconds (warning light on)→ After 3 seconds (warning light off)	Less than 1 V →11 to 14 V
A16-9 (SHR) ←→Chassis ground	Always	Less than 1 Ω
A16-10 (RH1) ←→A16-9 (SHR)	IG ON	11 to 14 V
A16-11 (LH1) ←→A16-9 (SHR)	IG ON	11 to 14 V
A16-12 (SBR) ←→A16-21 (SGR)	IG ON	4.75 to 5.25 V
A16-16 (SPDR) ←→A16-9 (SHR)	Driving at approx. 20 km/h	Pulse generation (Waveform 1)
A16-17 (RH2) ←→A16-9 (SHR)	Headlights off →on Headlights on with no change in vehicle height →Change the vehicle height and maintain for 3 seconds or more	Less than 1 V →1.0 to 14.4 V (17 seconds)
A16-18 (LH2) ←→A16-9 (SHR)	Headlights off →on, Headlights on with no change in vehicle height →Change the vehicle height and maintain for 3 seconds or more	Less than 1V →1.0 to 14.4 V (17 seconds)
A16-19 (SHR) ←→A16-21 (SGR)	IG ON (No passengers, no luggage, vehicle is stationary)	Approx. 2.5 V*1
A16-21 (SGR) ←→A16-9 (SHR)	Always	Less than 1 Ω
A16-23 (RH3) ←→A16-9 (SHR)	Always	Less than 1 Ω
A16-24 (LH3) ←→A16-9 (SHR)	Always	Less than 1 Ω

*1: Values change depending on the vehicle status.

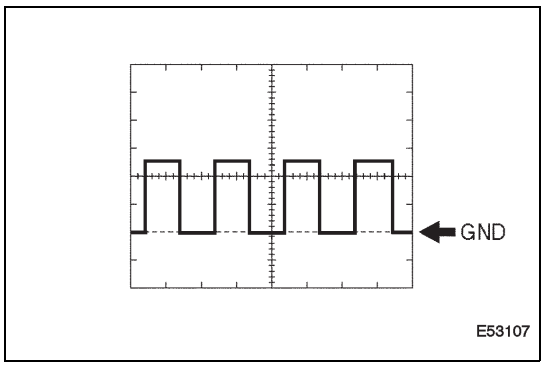

(1) Waveform

Item	Contents
Inspection terminals (Terminal symbol)	A16-16 (SPDR) ←→Chassis ground
Equipment setting	2 V/DIV, 2 ms/DIV
Measuring conditions	Drive at 30 km/h

LE

Failsafe list

1. Failsafe function
   (1) Headlight leveling computer ASSY

(a)If the following errors are detected, the headlight leveling computer ASSY stops auto leveling control. Also, if an error is detected while the actuator is in motion, the actuator operation is stopped.

Item	Error detection conditions	Restoring condition	Warning display
Power Supply Voltage Failure	When power supply voltage of 18.1 V or more is detected	When power supply voltage of 17.5 V or less is detected	OFF
	When power supply voltage of 9.0 V or less is detected	When power supply voltage of 9.3 V or more is detected	
Vehicle height sensor power supply error	When vehicle height sensor power supply voltage of 6.25 V or more is detected	When vehicle height sensor power supply voltage less than 6.25 V is detected	ON
	When vehicle height sensor power supply voltage of 4.45 V or less is detected	When vehicle height sensor power supply voltage above 4.45 V is detected	
Vehicle height sensor signal error	When vehicle height sensor signal voltage of 4.75 V or more is detected	When vehicle height sensor signal voltage less than 4.75 V is detected	ON
	When vehicle height sensor signal voltage of 0.25 V or less is detected	When vehicle height sensor signal voltage above 0.25 V is detected	
Vehicle height sensor data error during initialization	When the headlight leveling computer ASSY was initialized with an invalid sensor signal from the vehicle height sensor	When initialization is performed with a valid sensor value from the vehicle height sensor	ON

Headlight leveling motor circuit

Circuit figure

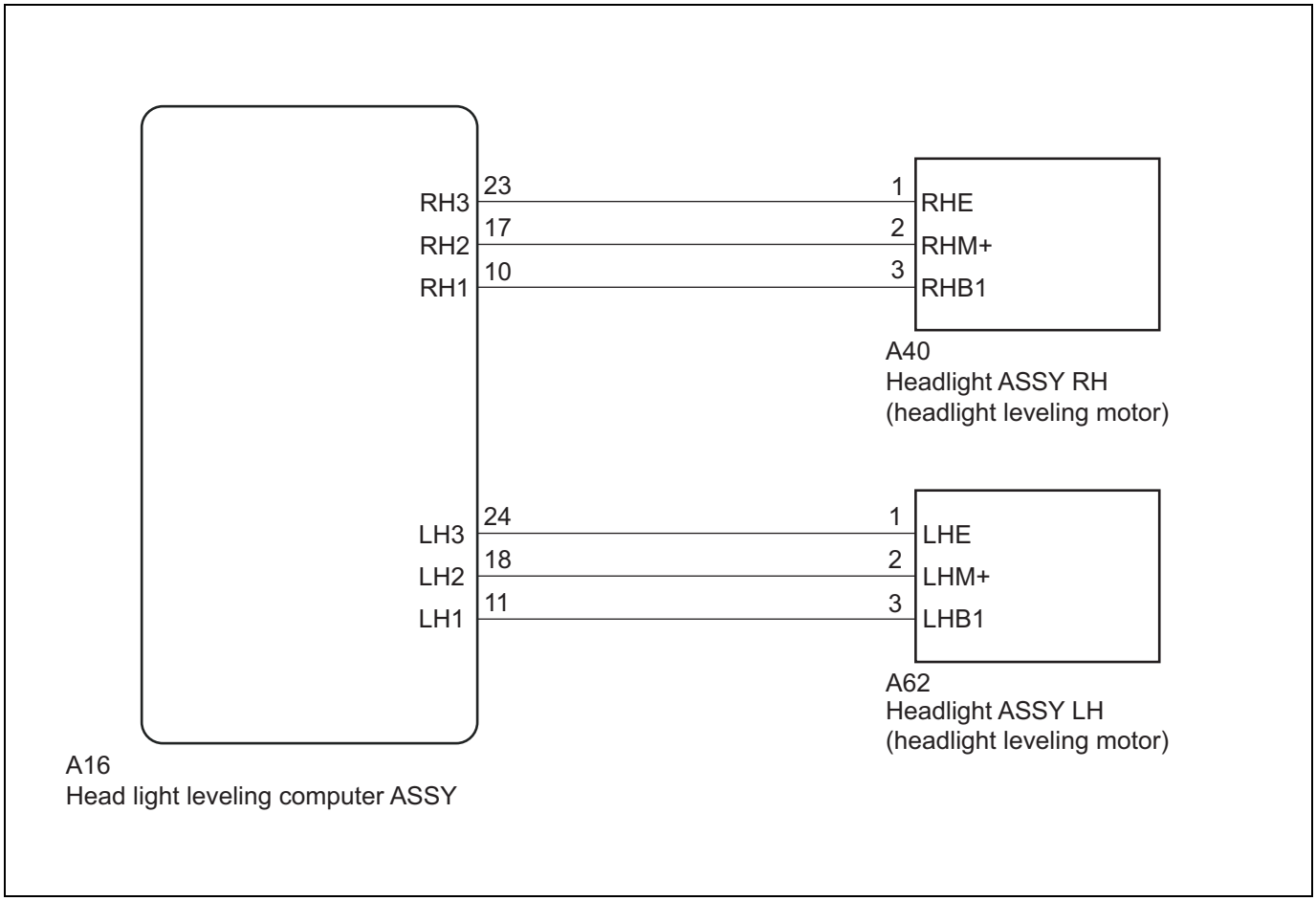

Inspection steps

CAUTION:

After replacing the headlight leveling computer ASSY, initialization is required. (Refer to LE - 38)

1	Inspection of the wiring harnesses and connectors (headlight leveling computer ASSY - headlight ASSY)

(1) Disconnect the connector A16 of the headlight leveling computer ASSY.
(2) Disconnect the connector A62 of the headlight ASSY LH, or connector A40 of the headlight ASSY RH.
(3) Measure the resistance according to the following chart.

Resistance (open circuit check)

LH side

Inspection terminals (Terminal symbol)	Inspection conditions	Standard value
A16-11 (LH1) - A62-3 (LHB1)	Always	Less than 1 Ω
A16-18 (LH2) - A62-2 (LHM+)	Always	Less than 1 Ω
A16-24 (LH3) - A62-1 (LHE)	Always	Less than 1 Ω

RH side

Inspection terminals (Terminal symbol)	Inspection conditions	Standard value
A16-10 (RH1) - A40-3 (RHB1)	Always	Less than 1 Ω
A16-17 (RH2) - A40-2 (RHM+)	Always	Less than 1 Ω
A16-23 (RH3) - A40-1 (RHE)	Always	Less than 1 Ω

Resistance (short circuit check)

LH side

Inspection terminals (Terminal symbol)	Inspection conditions	Standard value
A16-11 (LH1) - Chassis ground	Always	10 kΩ or more
A16-18 (LH2) - Chassis ground	Always	10 kΩ or more
A16-24 (LH3) - Chassis ground	Always	10 kΩ or more

RH side

Inspection terminals (Terminal symbol)	Inspection conditions	Standard value
A16-10 (RH1) - Chassis ground	Always	10 kΩ or more
A16-17 (RH2) - Chassis ground	Always	10 kΩ or more
A16-23 (RH3) - Chassis ground	Always	10 kΩ or more

NG → Repair or replacement of wiring harness or connector

OK

2	Replacement of the headlight leveling computer ASSY

(1) Replace with a new or normal headlight leveling computer ASSY. (Refer to LE - 85)

Next

3	Operation inspection

(1) Inspect the operation of the headlight leveling motors. (Refer to LE - 4)
Criteria: The headlight leveling motors operate normally.

Result

Item	Go to
Both headlight leveling motors operate.	A
The right headlight leveling motor does not operate.	B
The left headlight leveling motor does not operate.	C

B → Replacement of the headlight ASSY RH (Refer to LE - 50)

C → Replacement of the headlight ASSY LH (Refer to LE - 50)

A

Complete (Faulty headlight leveling computer ASSY)

Headlights

Exploded view

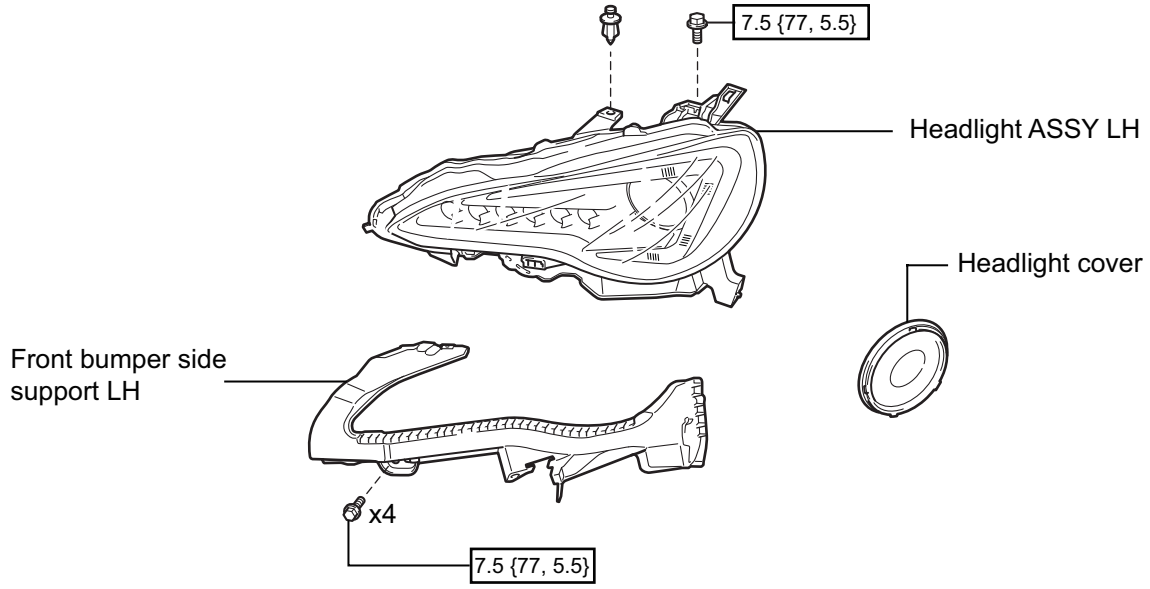

N*m {kgf*cm, ft*lbf}: Tightening torque

LI-10244

Removal

NOTE:

The following procedure is for LH side. Perform the same procedures for the RH and LH side.

1. Disconnection of the battery ground terminal (Refer to IN - 6)
2. Removal of the front bumper cover (Refer to ET - 4)

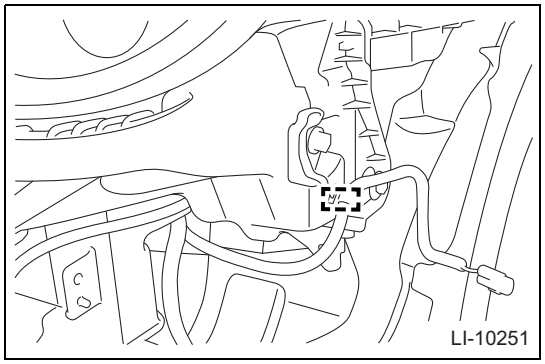

LI-10251

3. Removal of the front bumper side support LH
   (1) Using a clip remover, release the clamp, and disconnect the wiring harnesses.

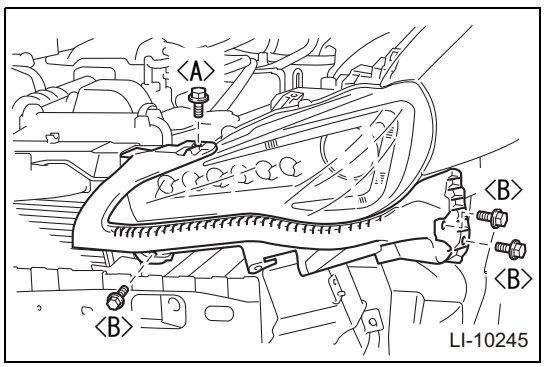

LI-10245

   (2) Remove bolt <A>.
   (3) Remove the 3 <B> bolts and remove the front bumper side support LH.

LE

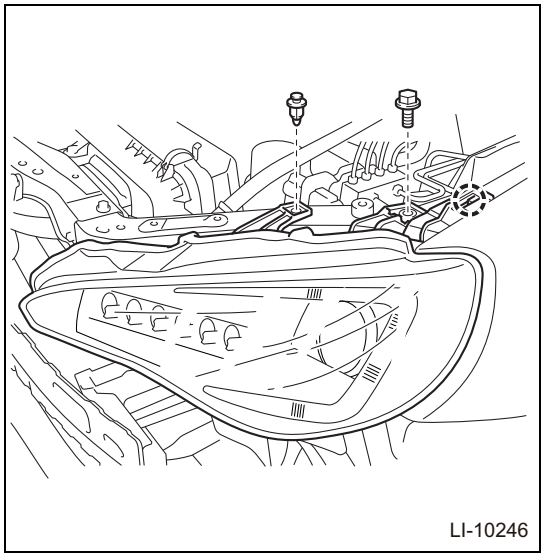

4. Removal of the headlight ASSY LH
   (1) Disconnect each connector.
   (2) Using a clip remover, remove the clip.
   (3) Remove the bolt and release the tab, and remove the headlight ASSY LH.

Installation

NOTE:

The following procedure is for LH side. Perform the same procedures for the RH and LH side.

1. Installation of the headlight ASSY LH
   (1) Connect each connector.
   (2) Fit in the tab.
   (3) Install the clip.
   (4) Using the bolt, install the headlight ASSY LH.
   Standard value:T=7.5N·m {77kgf·cm} {5.5ft·lbf}
2. Installation of the front bumper side support LH
   (1) Install bolt <A>.
   Standard value:T=7.5N·m {77kgf·cm} {5.5ft·lbf}
   (2) Using the 3 <B> bolts, install the front bumper side support LH.
   Standard value:T=7.5N·m {77kgf·cm} {5.5ft·lbf}
   (3) Engage the clamp to install the wiring harness.
3. Installation of the front bumper cover (Refer to ET - 12)
4. Connection of the battery ground terminal
   Standard value:T=6.0N·m {61kgf·cm} {4.4ft·lbf}
5. Settings when removing/installing battery terminals (Refer to IN - 10)
6. Headlight beam adjustment (Refer to LE - 51)

Adjustment

NOTE:

The following procedure is for LH side. Perform the same procedures for the RH and LH side.

1. Preliminary operations for adjusting the headlight beams
   NOTE:
   Perform the headlight adjustment with the low beams.
   (1) Make sure that the vehicle is parked on a level surface.
   (2) Make sure that no luggage is loaded into the vehicle.
   (3) Fill up the fuel tank.
   (4) Check that there is the specified amount of oil.
   (5) Check that there is the specified amount of coolant.
   (6) Adjust the tire pressure to the specified value. (Refer to TW - 2)
   (7) Shake the car up and down, and let the suspension settle.
   (8) Have 1 person get in the driver's seat.
   (9) Start the engine and charge the battery.

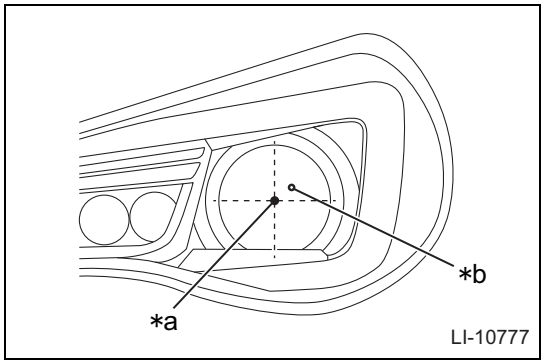

(10) Measure the distance between the light source centers of the low/high beam, and the height of the light source center.

Captions in illustration

*a	Light source center of the low/high beam
*b	Not used

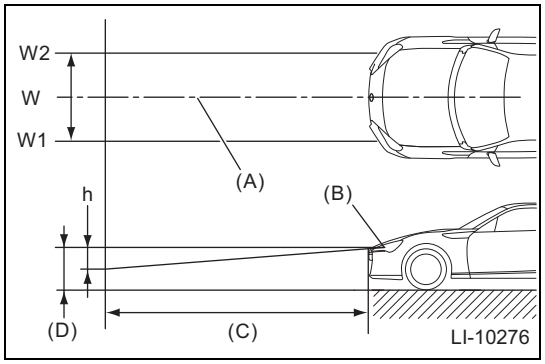

(11) Face the measuring panel to the front of the vehicle.

Captions in illustration

(A)	Center of the vehicle
(B)	Center of the bulbs
(C)	3 m (10 ft)
(D)	Height of the center of the headlights
W	Area between the center of the headlights =1.342 m (52.83 in)
h	Height of the center of the headlights at 3 m (10 ft)

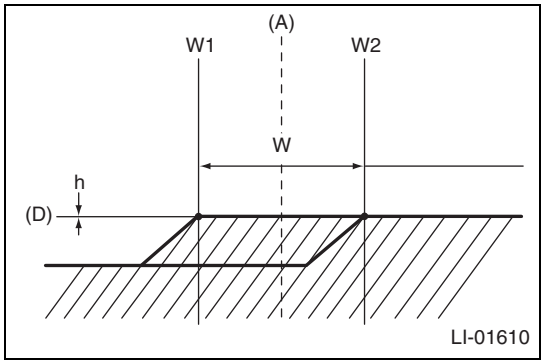

(12) Turn the headlights on with low beams.

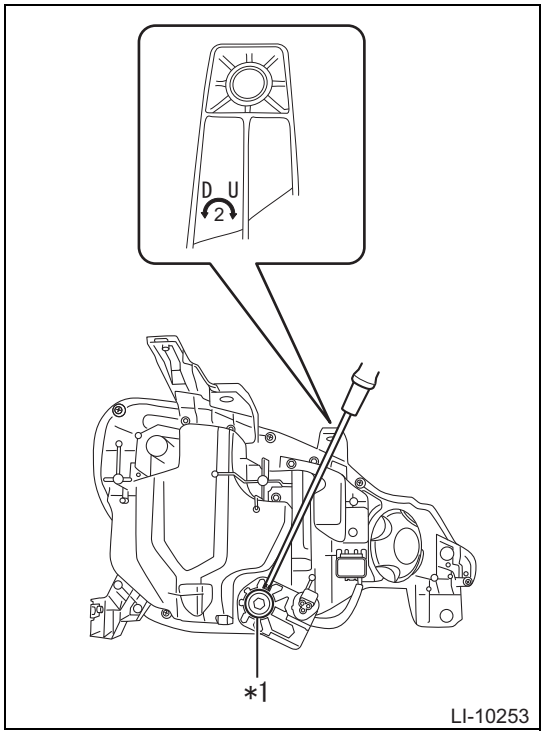

(13) If they vary greatly from the standard line, adjust the beams for the low beams so that the line separating light and darkness matches the position of the standard line.

Captions in illustration

*1	Vertical aiming screw

CAUTION:
The aiming screw is adjusted according to the way it is tightened. (When adjusting in the loosening direction, tighten it again after loosening it.)

Fog light

Exploded view

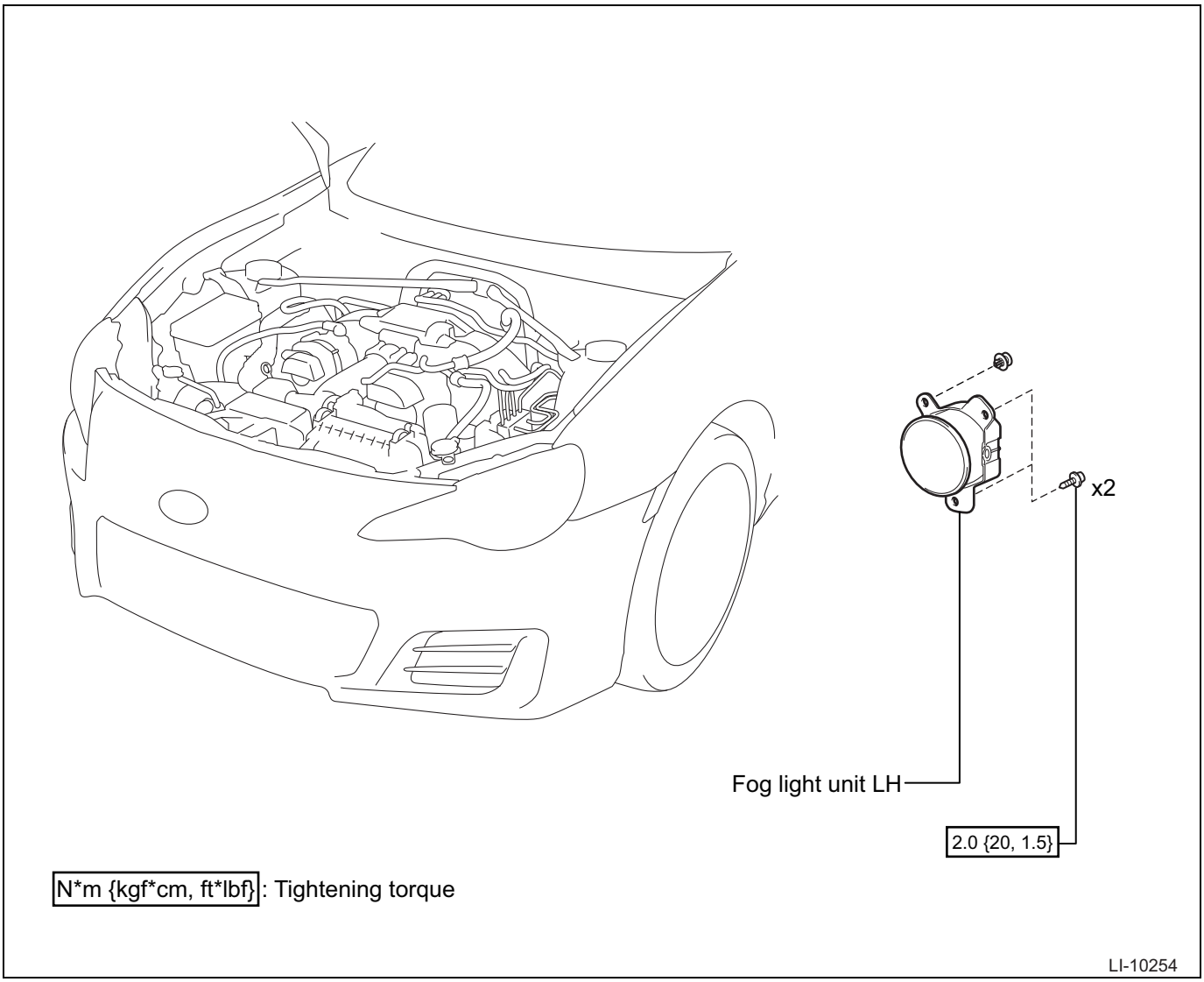

Removal

NOTE:

The following procedure is for LH side. Perform the same procedures for the RH and LH side.

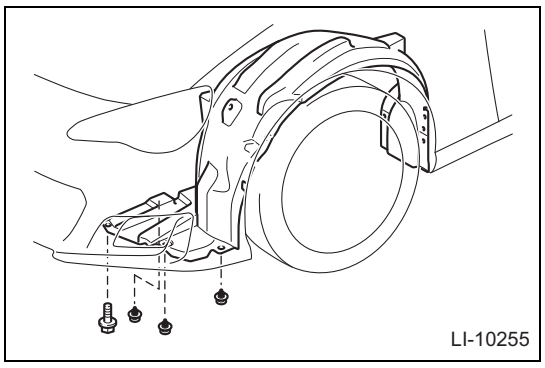

1. Turn over the front mud guard LH.
   (1) Remove the bolt.
   (2) Using a clip remover, remove the 3 clips and turn over the front mud guard LH.

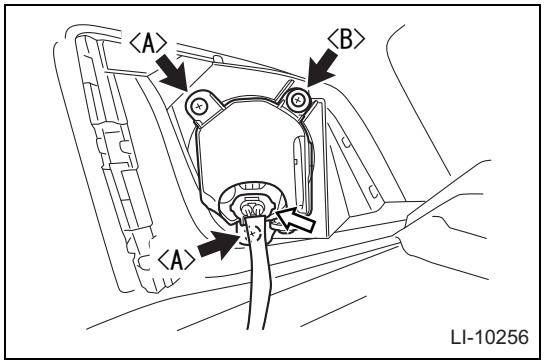

2. Removal of the fog light unit LH
   (1) Disconnect the connector.
   (2) Remove 2 screws <A>.
   (3) Remove the clip <B>, and remove the fog light unit LH.

Installation

NOTE:

The following procedure is for LH side. Perform the same procedures for the RH and LH side.

1. Installation of the fog light unit LH
   (1) Install the clip.
   (2) Using 2 screw, install the fog light unit LH.
   Standard value:T=2.0N·m {20kgf·cm} {1.5ft·lbf}
   (3) Connect the connector.
2. Installation of the front mud guard LH
   (1) Using 3 clips, install the front mud guard LH.
   (2) Install the bolt.
   Standard value:T=7.5N·m {77kgf·cm} {5.5ft·lbf}
3. Adjusting the fog light beams (Refer to LE - 55)

Adjustment

NOTE:

The following procedure is for LH side. Perform the same procedures for the RH and LH side.

1. Preliminary operation for adjusting the fog light beams
   (1) Check that the vehicle is parked on a level surface.
   (2) Check that no luggage is loaded on the vehicle.
   (3) Fill up the fuel tank.
   (4) Check that there is the specified amount of oil.
   (5) Check that there is the specified amount of coolant.
   (6) Adjust the tire pressure to the specified value. (Refer to TW - 2)
   (7) Shake the car up and down, and let the suspension settle.
   (8) Have 1 person get in the driver's seat.
   (9) Start the engine and charge the battery.
2. Turn over the front mud guard LH. (Refer to LE - 54)

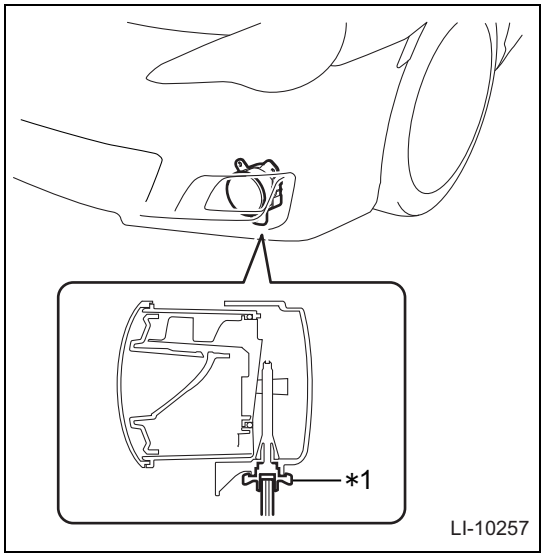

4. Inspection of the fog light beams
   Criteria: They shine within 40 m (131.2 ft).

3. Adjusting the fog light beams
   (1) Adjust by turning the aiming screw from below the vehicle.

Captions in illustration

*1	Aiming screw

NOTE:
Tightening the aiming screw makes the fog light face upward, and loosening it makes the fog light face downward.

Front side marker lights

Exploded view

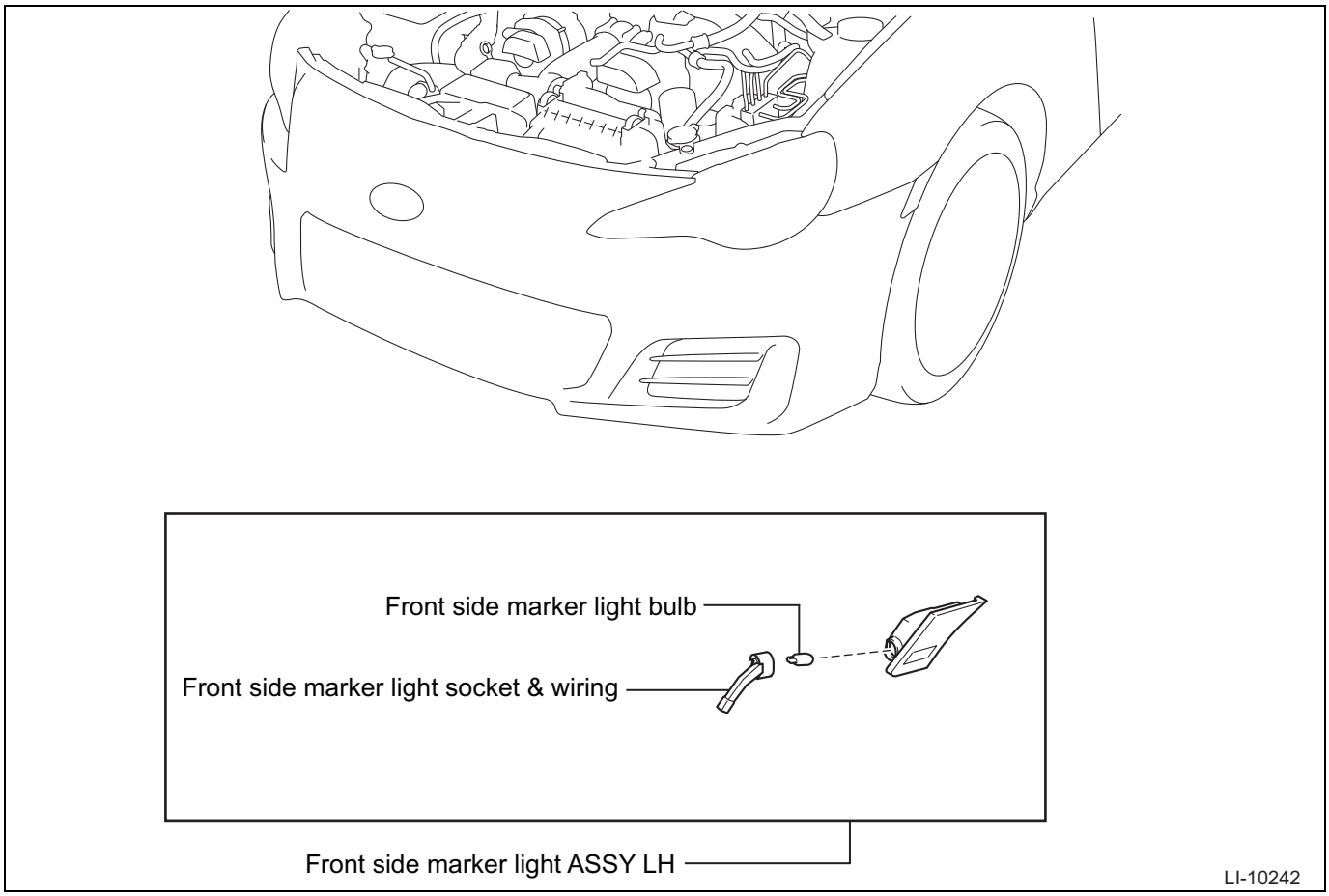

Removal

NOTE:

The following procedure is for LH side. Perform the same procedures for the RH and LH side.

1. Removal of the front side marker light ASSY LH
   (1) Turn the front tires all the way to the right side.

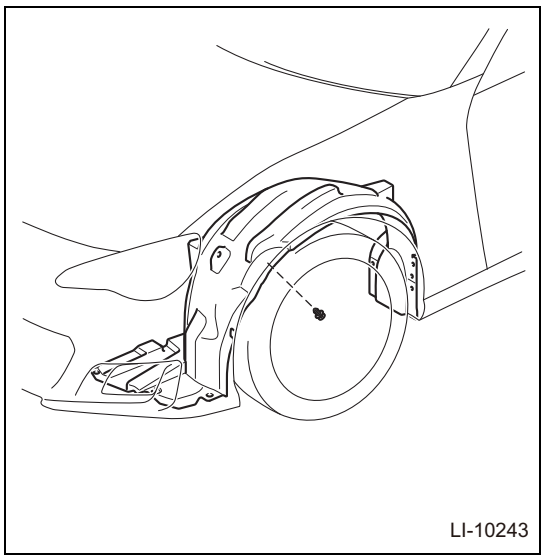

   (2) Remove the clip and turn over the front mud guard.

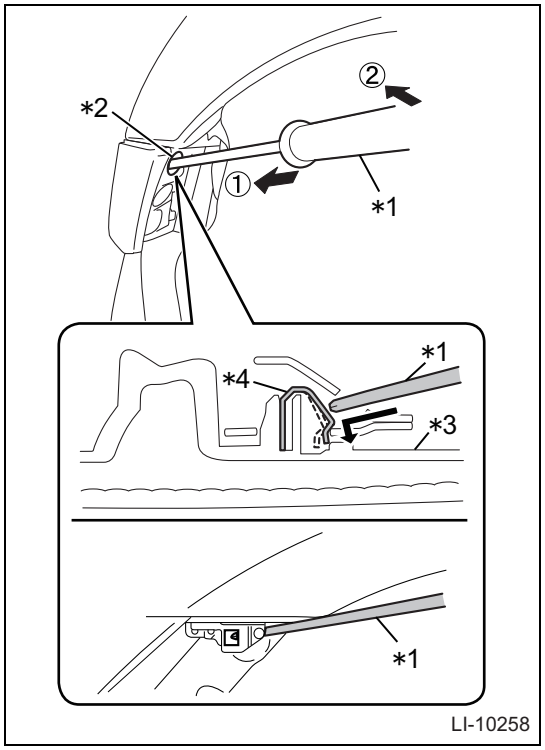

(3) Using a Phillips screwdriver, while pushing the metal clip of the front side marker light ASSY LH from the service hole in the direction of the arrow in the figure, release the clip.
NOTE:
While firmly pressing the Phillips screw driver in the direction of [1], move it in the direction of [2].

Captions in illustration

*1	Phillips screw driver
*2	Service hole
*3	Front side marker light ASSY LH
*4	Metal clip

(4) Disconnect the connector and remove the front side marker light ASSY LH.

Disassembly

NOTE:
The following procedure is for LH side. Perform the same procedures for the RH and LH side.

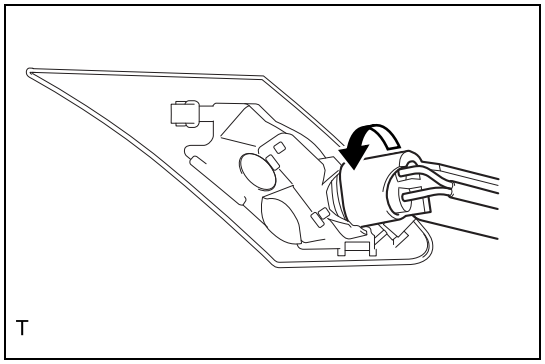

1. Removal of the front side marker light socket & wiring
   (1) Turn in the direction of the arrow in the figure, and remove the front side marker light socket & wiring as a unit with the front side marker light bulb.
2. Removal of the front side marker light bulb
   (1) Remove the front side marker light bulb from the front side marker light socket & wiring.

Assembly

LE

NOTE:
The following procedure is for LH side. Perform the same procedures for the RH and LH side.

1. Installation of the front side marker light bulb
   (1) Install the front side marker light bulb on the front side marker light socket & wiring.

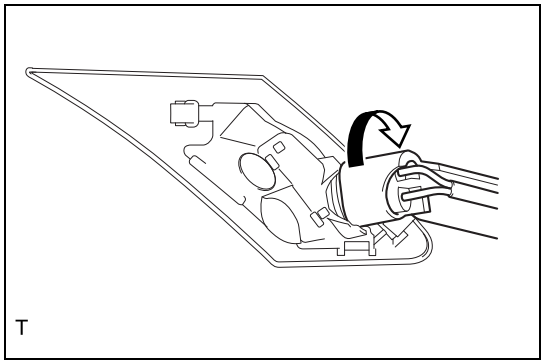

2. Installation of the front side marker light socket & wiring
   (1) Turn in the direction of the arrow in the figure, and install the front side marker light socket & wiring as a unit with the front side marker light bulb.

Installation

NOTE:

The following procedure is for LH side. Perform the same procedures for the RH and LH side.

1. Installation of the front side marker light ASSY LH
   (1) Connect the connector.
   (2) Fit in the tab and install the front side marker light ASSY LH.

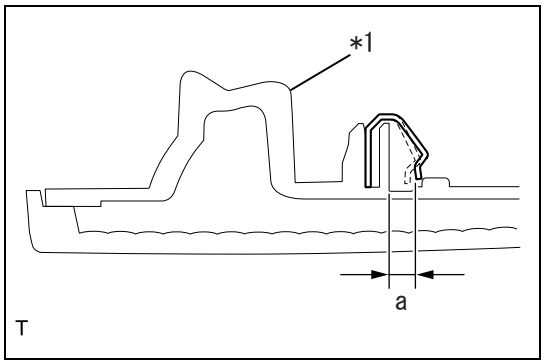

   (3) Check in the installation condition.
   NOTE:
   If looseness is found in the front side marker light ASSY LH, adjust the clip.

Captions in illustration

*1	Front side marker light ASSY

Standard value

Part	Standard value
a	3.0 mm {0.118 in}

   (4) Using the clip, install the front mud guard.

Rear combination light

Exploded view

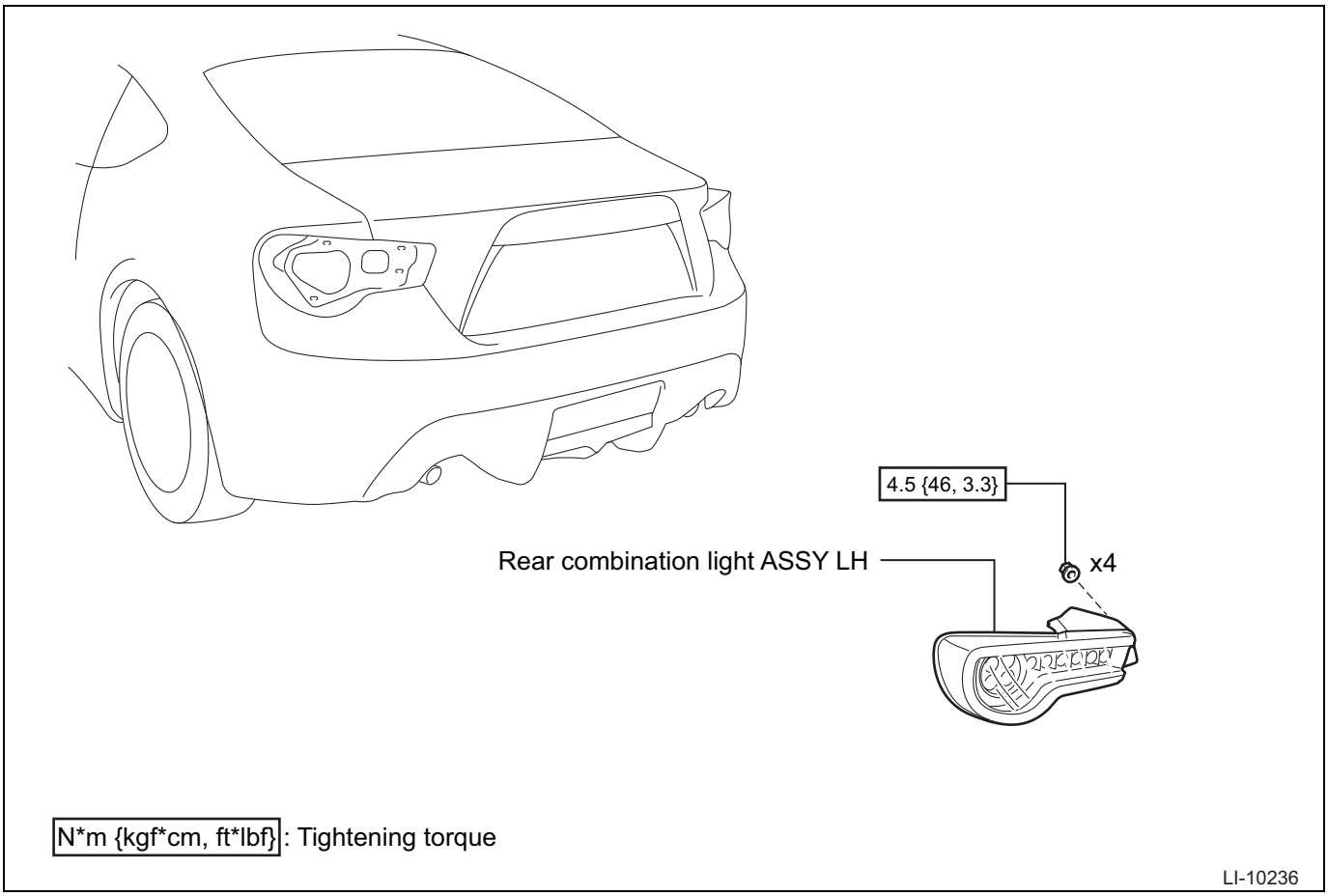

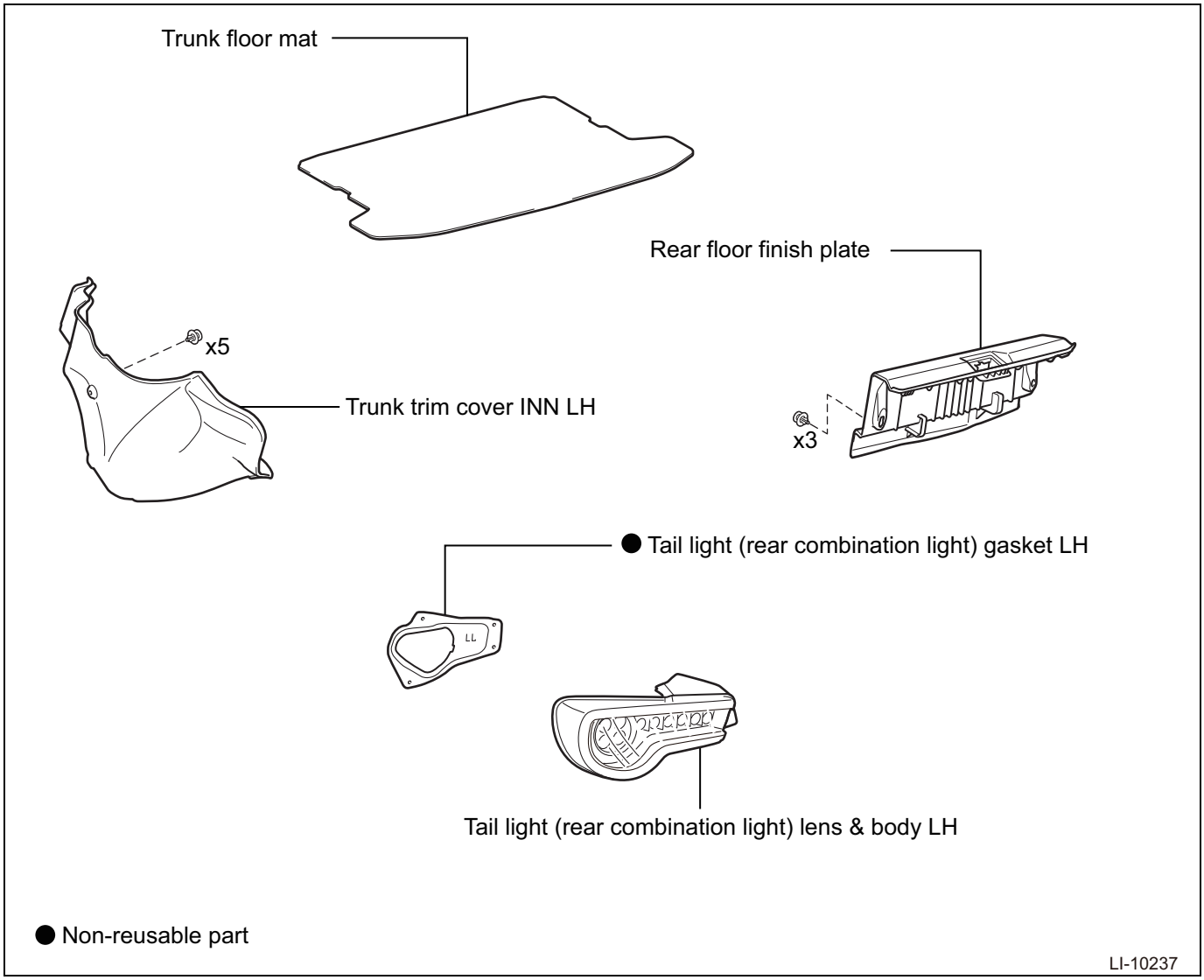

Removal

NOTE:

The following procedure is for LH side. Perform the same procedures for the RH and LH side.

1. Removal of the trunk floor mat

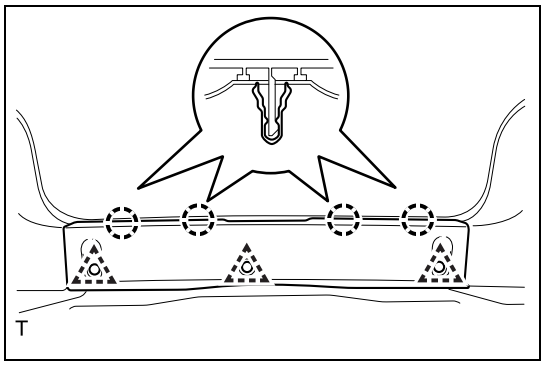

2. Removal of the rear floor finish plate
   (1) Using a clip remover, remove the 3 clips.
   (2) Release the 4 tabs, and remove the rear floor finish plate.

LE

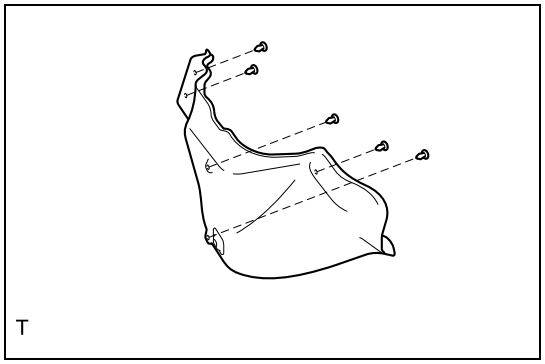
T

3. Removal of the trunk trim cover INN LH
   (1) Using a clip remover, remove the 5 clips and remove the trunk trim cover INN LH.

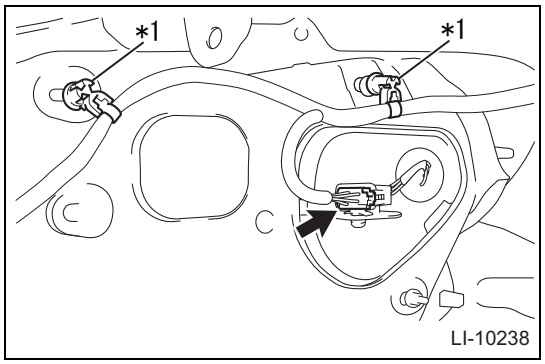

4. Removal of the rear combination light ASSY LH
   (1) Disconnect the connector.

*1	Grommet

   (2) Remove the 2 grommets, and disconnect the wiring harnesses.

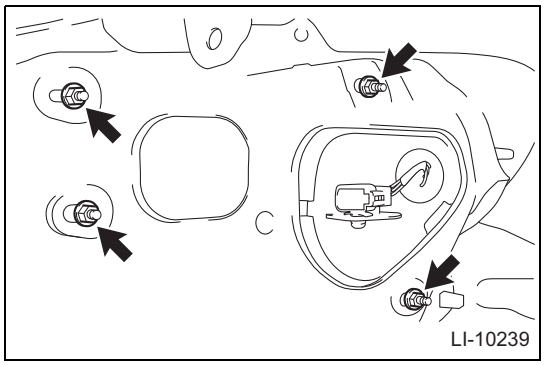

   (3) Remove the 4 nuts.

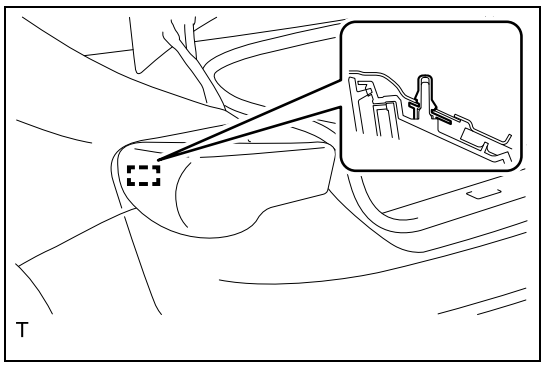
T

   (4) Release the guide, and remove the rear combination light ASSY LH.

LE

Disassembly

NOTE:
The following procedure is for LH side. Perform the same procedures for the RH and LH side.

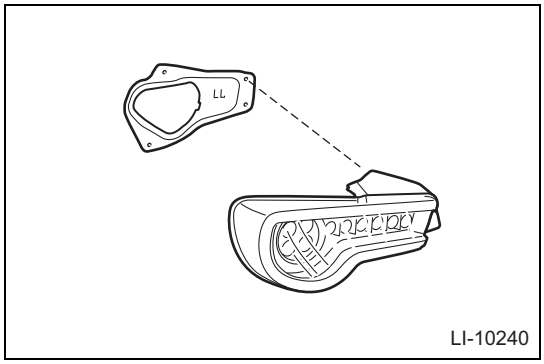

1. Removal of the tail light (rear combination light) gasket LH
   (1) Remove the tail light (rear combination light) gasket LH.
   CAUTION:
   - If the tail light (rear combination light) gasket LH sticks to the body, be sure to remove all of it.
   - Because it may allow water to enter, once you have removed the gasket, be sure to replace it with a new tail light (rear combination light) gasket LH.

Assembly

NOTE:

The following procedure is for LH side. Perform the same procedures for the RH and LH side.

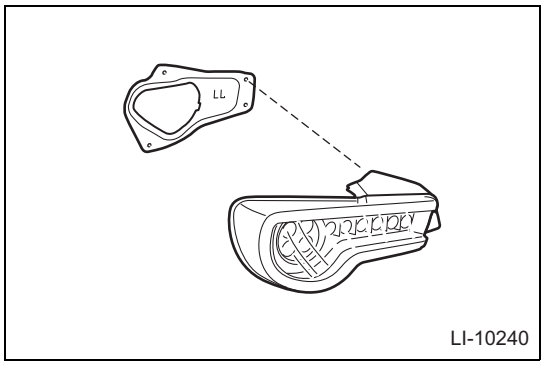

1. Installation of the tail light (rear combination light) gasket LH
   (1) Install a new tail light (rear combination light) gasket LH.

Installation

NOTE:

The following procedure is for LH side. Perform the same procedures for the RH and LH side.

1. Installation of the rear combination light ASSY LH
   (1) Fit in the guide, and temporarily install the rear combination light ASSY LH.

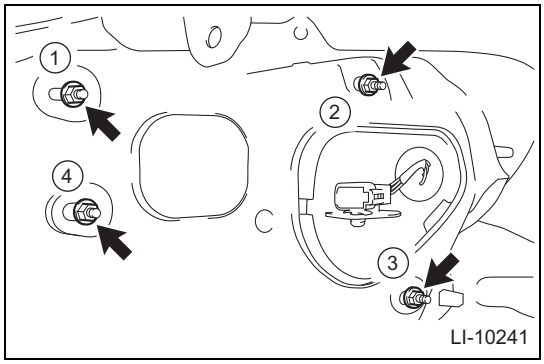

   (2) Tighten the 4 nuts from [1] to [4] to install the rear combination light ASSY LH.
   NOTE:
   The RH side is mirrored.
   Standard value:T=4.5N·m {46kgf·cm} {3.3ft·lbf}
   (3) Using 2 grommets, install the rear combination light socket & wiring SUB-ASSY LH.
   (4) Connect the connector.
2. Installation of the trunk trim cover INN LH
   (1) Using 5 clips, install the trunk trim cover INN LH.
3. Installation of the rear floor finish plate
   (1) Fit in the 4 tabs, and using 3 clips, install the rear floor finish plate.
4. Installation of the trunk floor mat

Unit inspection

NOTE:

The following procedure is for LH side. The RH side and the LH side inspections follow the same steps.

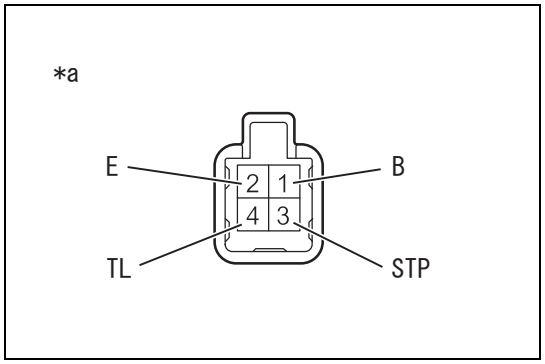

1. Inspection of the rear combination light socket & wiring SUB-ASSY LH
   (1) Inspect if the lights turn on when battery voltage is applied between the connector terminals.
   Criteria

Battery connection	Criteria
Battery positive →1 (B) Battery ground →2 (E)	Tail lights, rear side marker lights
Battery positive →3 (STP) Battery ground →2 (E)	Stop lights turn on.
Battery positive →4 (TL) Battery ground →2 (E)	The turn lights turn on.

Captions in illustration

*a	Connector not connected (Rear combination light socket & wiring SUB-ASSY LH)

NOTE:
Perform this inspection using new or properly-functioning bulbs.

Back-up light

Exploded view

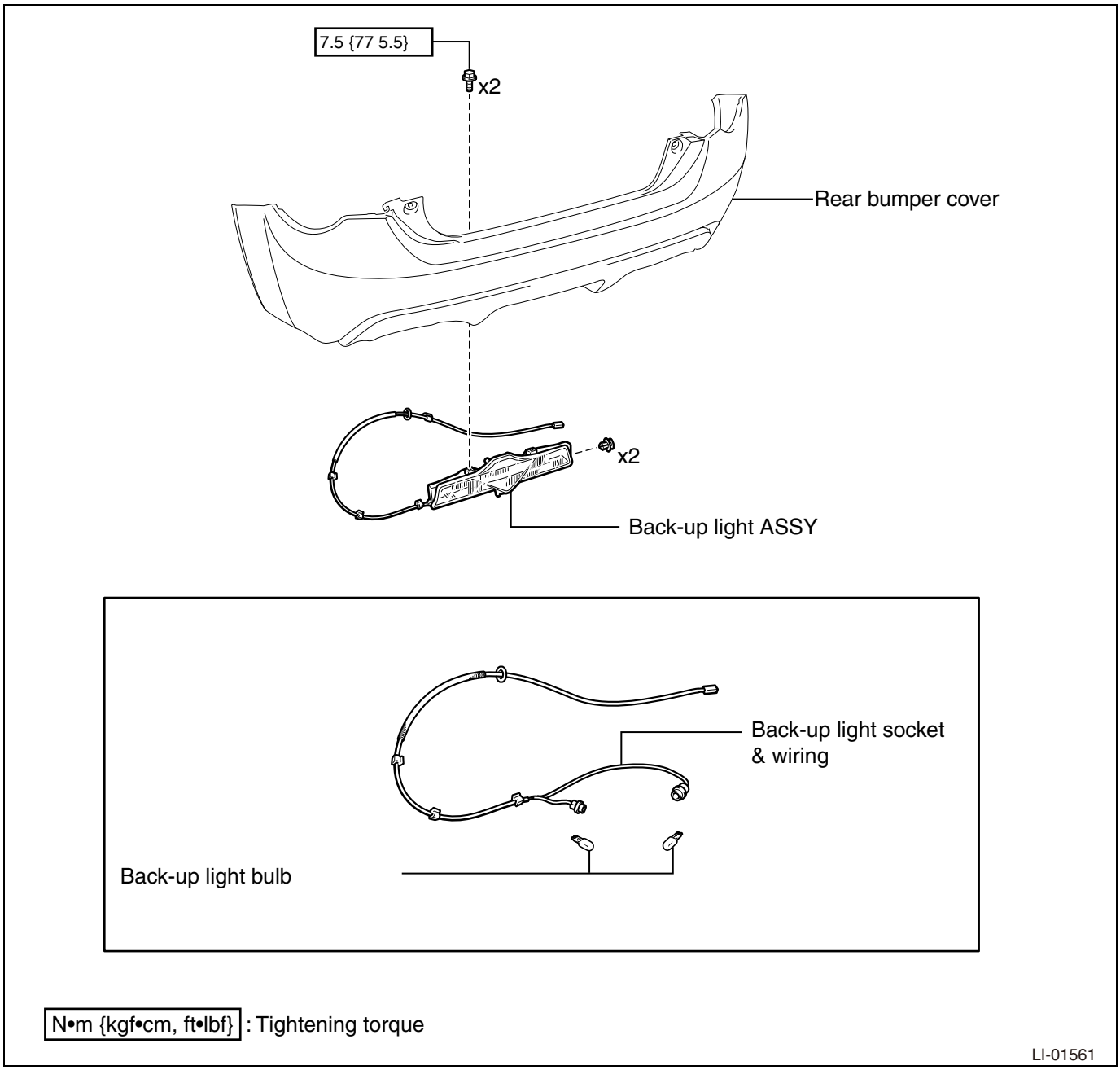

Removal

1. Removal of the rear bumper cover (Refer to ET - 19)

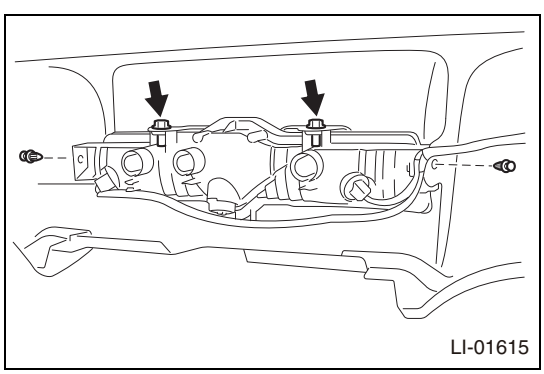

2. Removal of the back-up light ASSY
   (1) Using a clip remover, remove the 2 clips.
   (2) Remove the 2 bolts.

LE

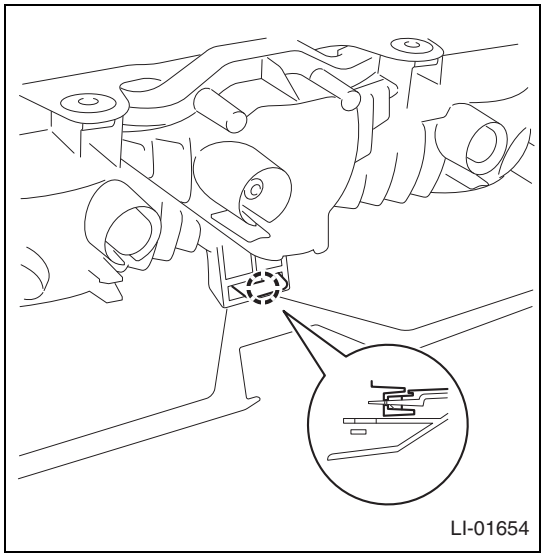

(3) Release the tab, and remove the back-up light ASSY.

Disassembly

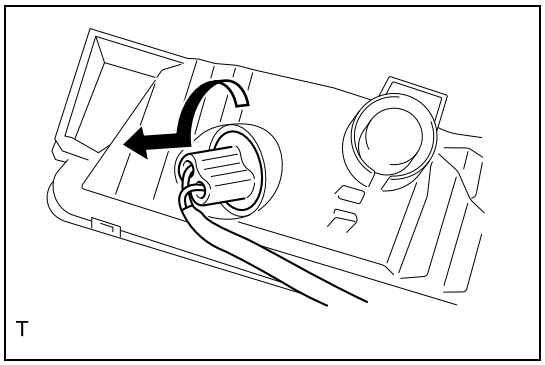

1. Removal of the back-up light bulb
   (1) Turn in the direction of the arrow in the figure, and remove the back-up light bulbs as a unit with the back-up light sockets & wiring.
   (2) Remove the back-up light bulbs from the back-up light sockets & wiring.
   NOTE:
   Remove on the LH side using the same steps as the RH side.

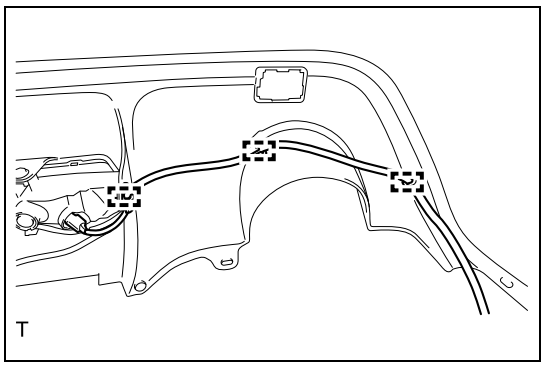

2. Removal of the back-up light sockets & wiring
   (1) Release the 3 clamps in the figure, and remove the back-up light sockets & wiring.

Assembly

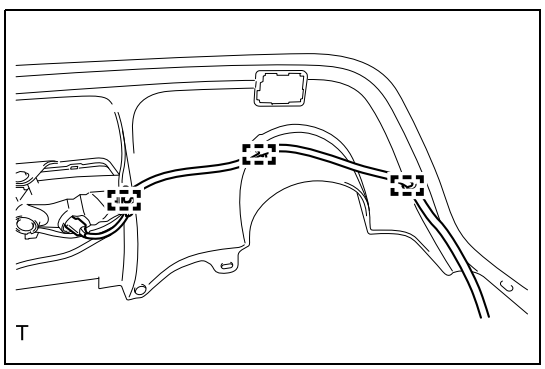

1. Installation of the back-up light sockets & wiring
   (1) Fit in the 3 clamps, and install the back-up light sockets & wiring.

LE

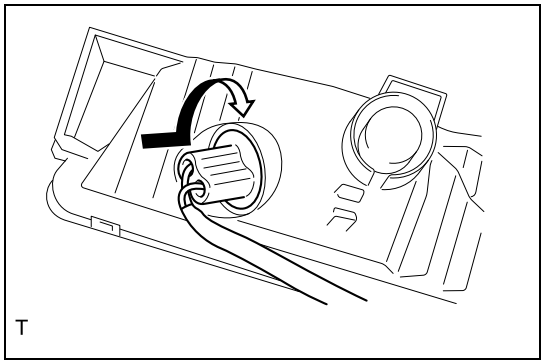

2. Installation of the back-up light bulbs
   (1) Install the back-up light bulbs on the back-up light sockets & wiring.
   (2) Turn in the direction of the arrow in the figure, and install the back-up light bulbs as a unit with the back-up light sockets & wiring.
   NOTE:
   Install on the LH side using the same steps as the RH side.

Installation

1. Installation of the back-up light ASSY
   (1) Fit in the tab, and install the back-up light ASSY.
   (2) Install the 2 clips.
   (3) Install the 2 bolts.
   Standard value:T=7.5N·m {77kgf·cm} {5.5ft·lbf}
2. Installation of rear bumper cover (Refer to ET - 26)

Unit inspection

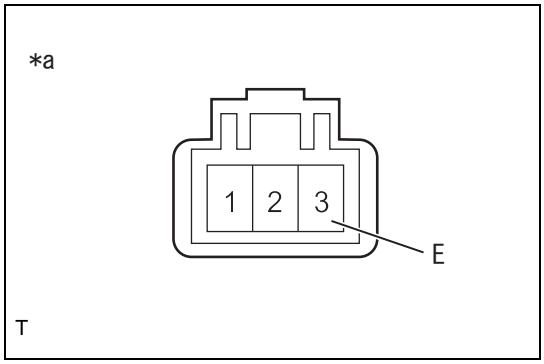

1. Inspection of the back-up light
   (1) Inspect if the back-up light turns on when battery voltage is applied between the terminals.

Criteria

Battery connection	Criteria
Battery positive →1 Battery ground →3 (E)	The back-up light turns on.

Captions in illustration

*a	Connector not connected (Back-up light sockets & wiring)

NOTE:
Perform this inspection using new or properly-functioning bulbs.

License plate light

Exploded view

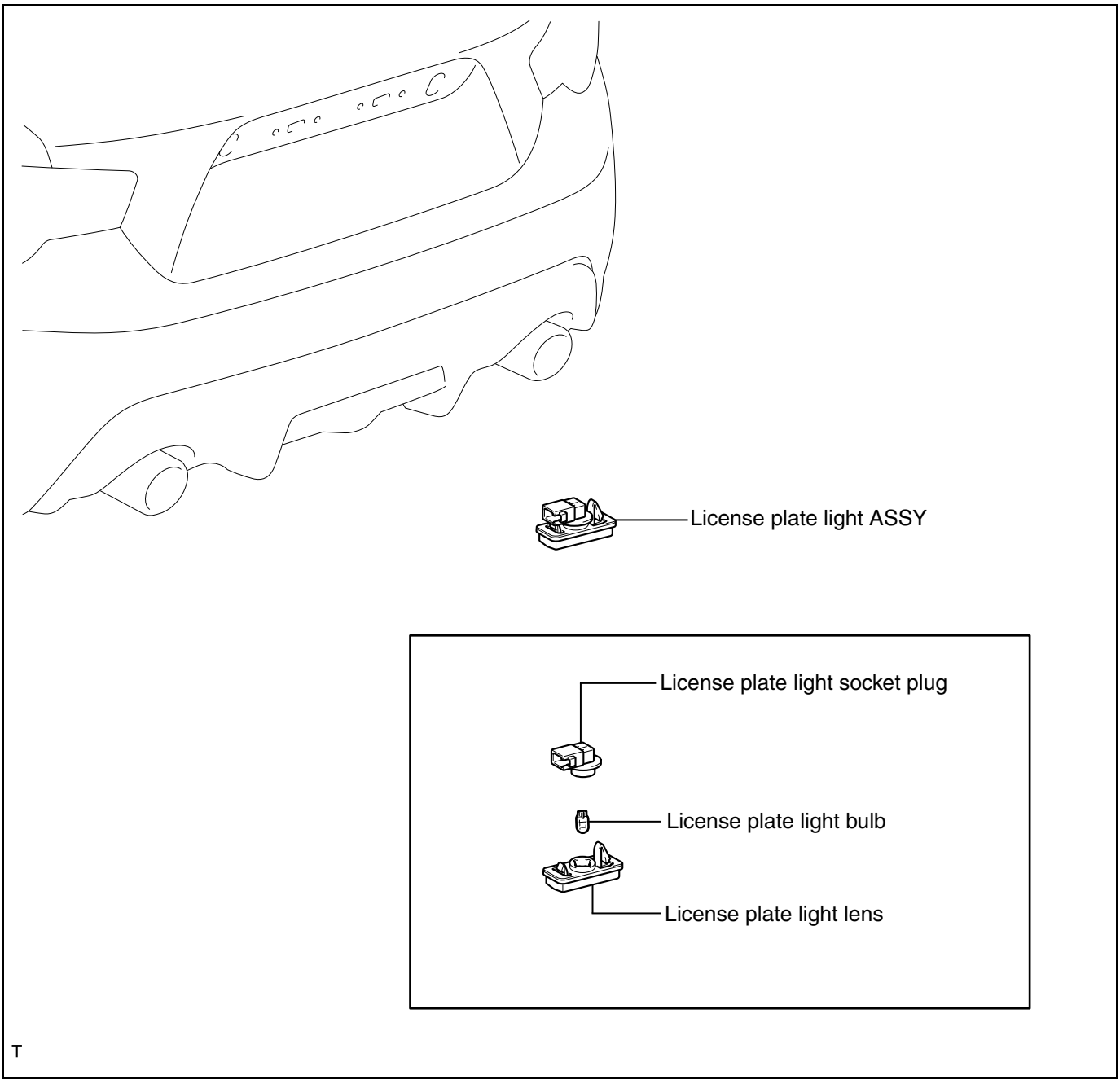

Removal

1. Removal of trunk garnish (Refer to ET - 51)

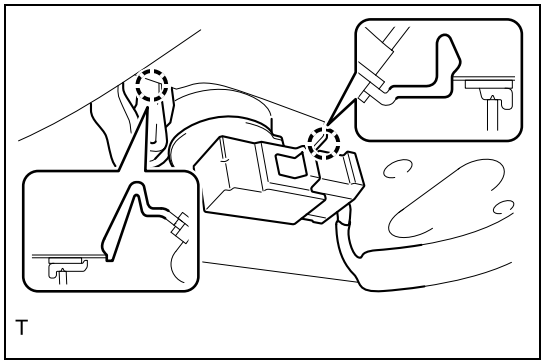

2. Removal of the license plate light ASSY
   (1) Release the 2 tabs and remove the license plate light ASSY.

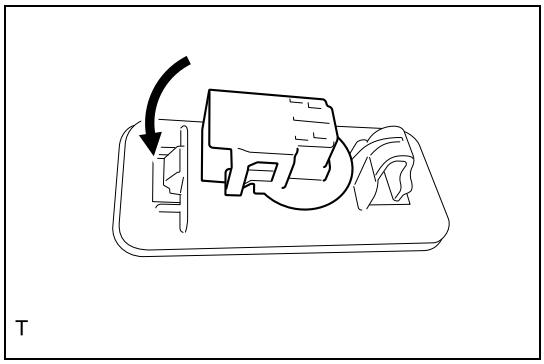

3. Removal of the license plate light bulb
   (1) Turn in the direction of the arrow in the figure, and remove the license plate light bulb as a unit with the license plate light socket plug.
   (2) Remove the license plate light bulb from the license plate light socket plug.

Installation

1. Installation of the license plate light bulb
   (1) Install the license plate light bulb on the license plate light socket plug.

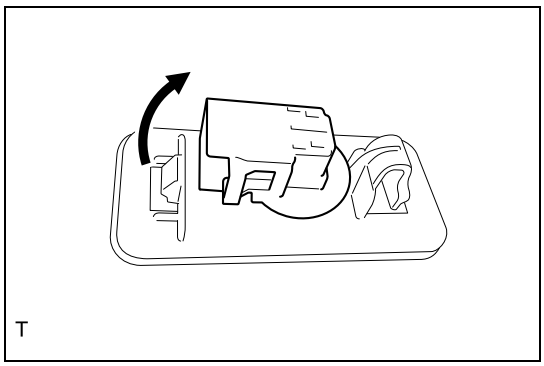

   (2) Turn in the direction of the arrow in the figure, and install the license plate light bulb as a unit with the license plate light socket plug.

2. Installation of the license plate light ASSY
   (1) Fit in the 2 tabs and install the license plate light ASSY.
3. Installation of trunk garnish (Refer to ET - 52)

Unit inspection

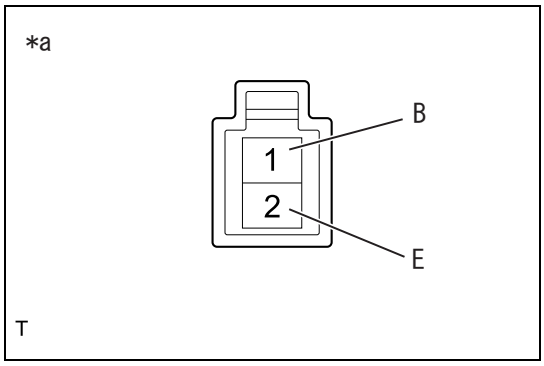

1. Inspection of the license plate light ASSY
   (1) Light inspection
      (a)Inspect if the light turns on when battery voltage is applied to each connector terminal.

Criteria

Battery connection	Criteria
Battery positive →1 (B) Battery ground →2 (E)	Light turns on.

Captions in illustration

*a	Connector not connected (License plate light ASSY)

LE

High-mounted stop light

Exploded view

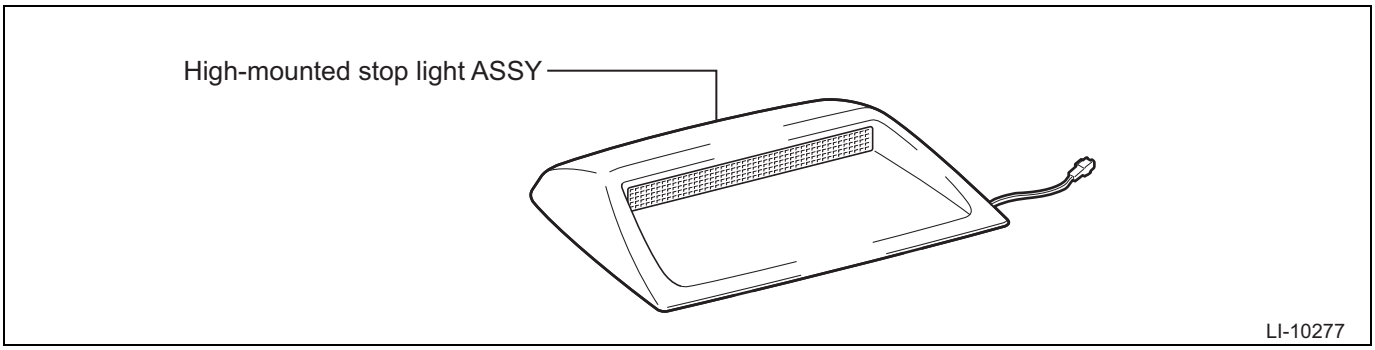

Removal

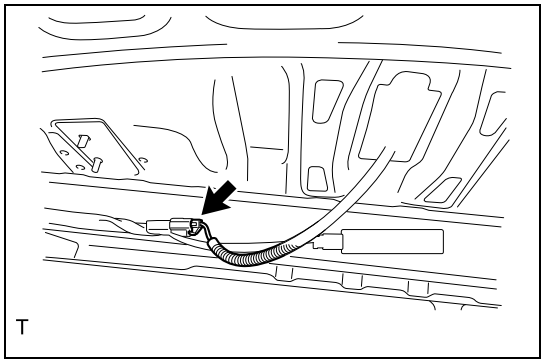

1. Removal of the high-mounted stop light ASSY
   (1) Disconnect the connector.

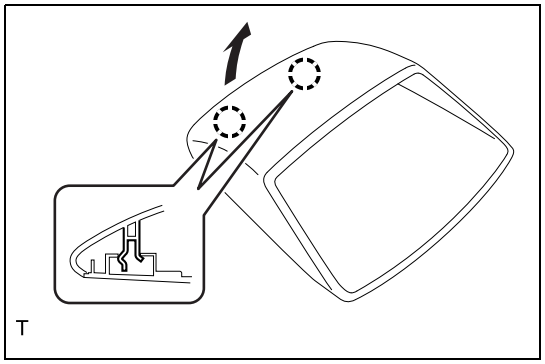

(2) Lift in the direction of the arrow in the figure, and release the 2 tabs.

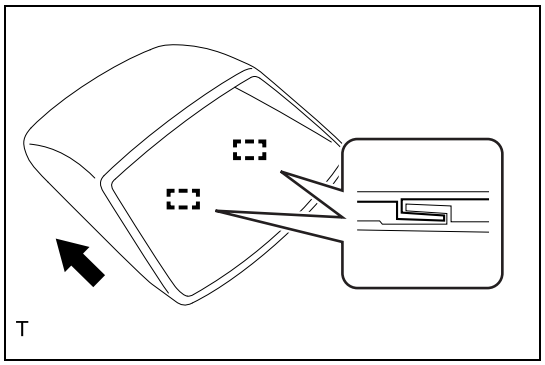

(3) Slide in the direction of the arrow in the figure, release the 2 guides, and remove the high-mounted stop light ASSY.

LE

Installation

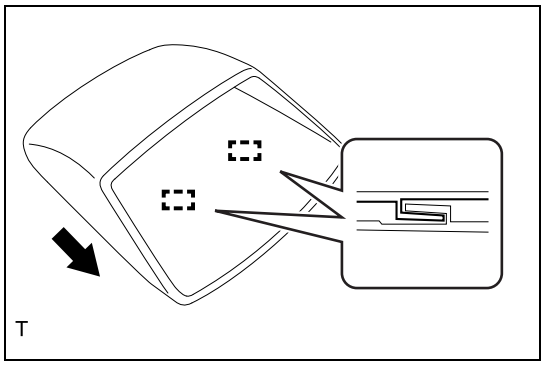

1. Installation of the high-mounted stop light ASSY
   (1) Slide in the direction of the arrow in the figure, and insert the 2 guides.

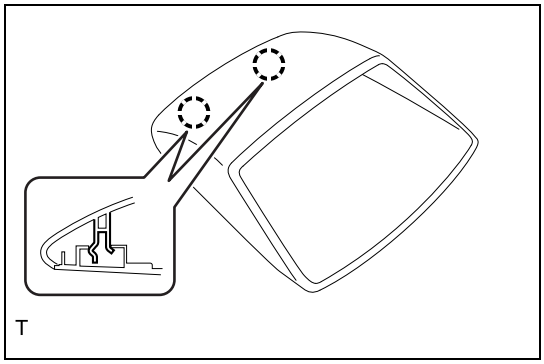

   (2) Engage two claws and install the high-mounted stop light ASSY.
   (3) Connect the connector.

Unit inspection

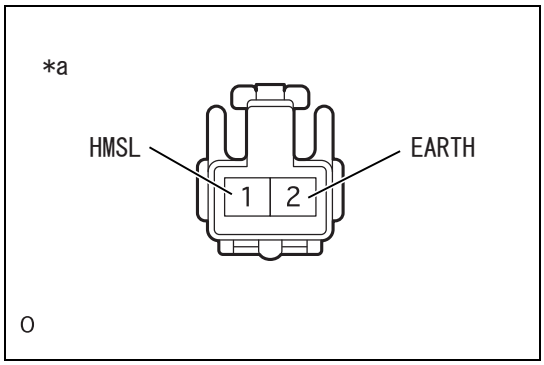

1. Check of high-mounted stop light ASSY
   (1) Connect the battery positive and ground between each terminal, and check if the high-mounted stop light ASSY turns on.
   Criteria

Battery connection	Criteria
Battery positive →1 (HMSL) Battery ground →2 (EARTH)	The high-mounted stop light ASSY turns on.

Captions in illustration

*a	Connector not connected (High-mounted stop light ASSY)

Headlight dimmer switch

Exploded view

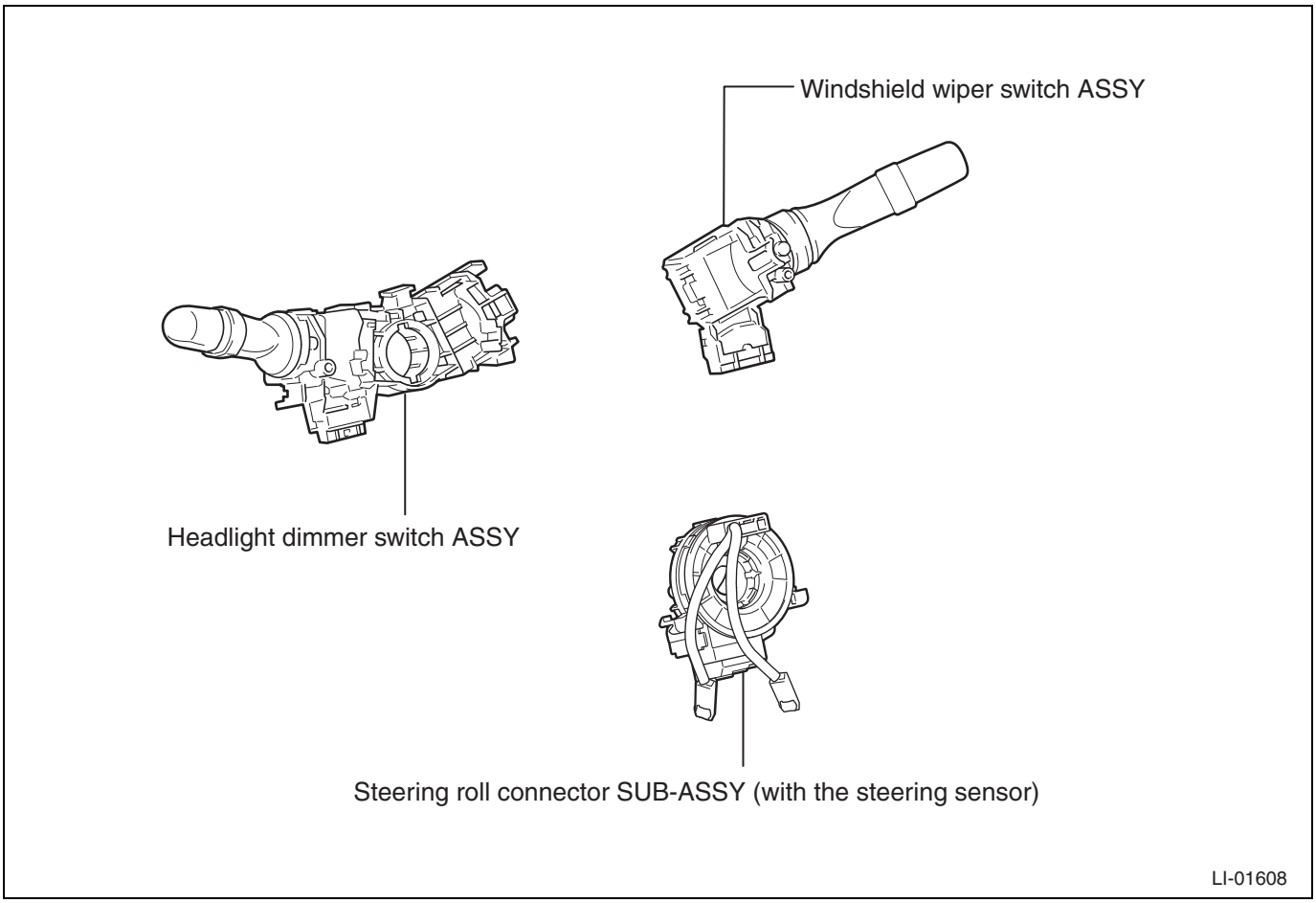

Removal

1. Removal of the steering roll connector SUB-ASSY (with steering sensor) (Refer toRS - 250)
2. Removal of the windshield wiper switch ASSY (Refer to WW - 23)

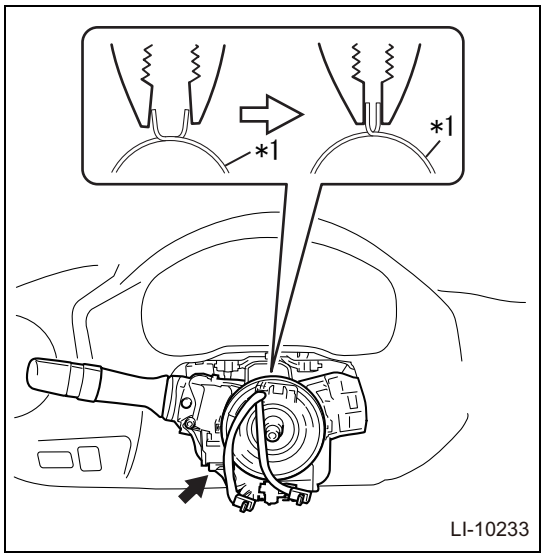

3. Removal of the headlight dimmer switch ASSY
   (1) Disconnect the connector.
   (2) Using pliers, loosen the band clamp as in the figure.

Captions in illustration

*1	Band clamp

LE

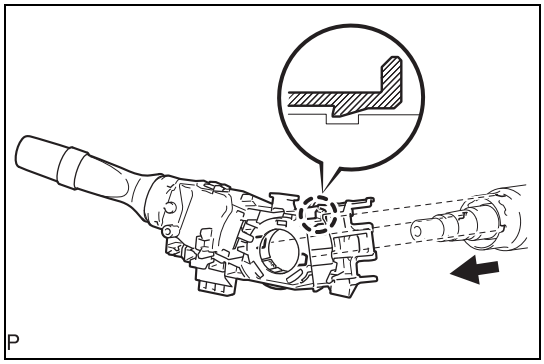

(3) With the band clamp loosened, release the tab, and remove the headlight dimmer switch ASSY.

Installation

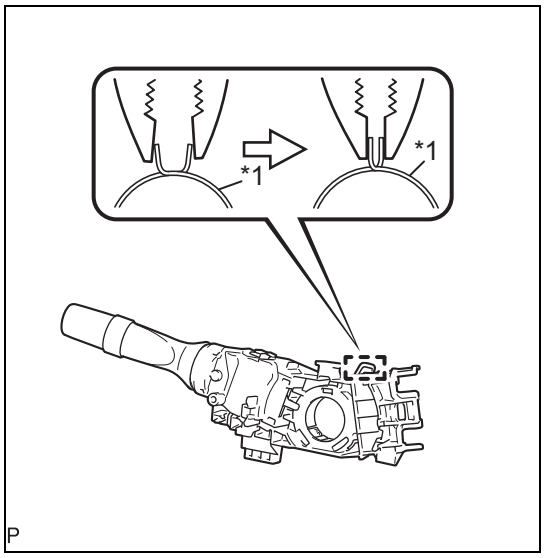

1. Installation of the headlight dimmer switch ASSY
   (1) Using pliers, loosen the band clamp as in the figure.

*1	Band clamp

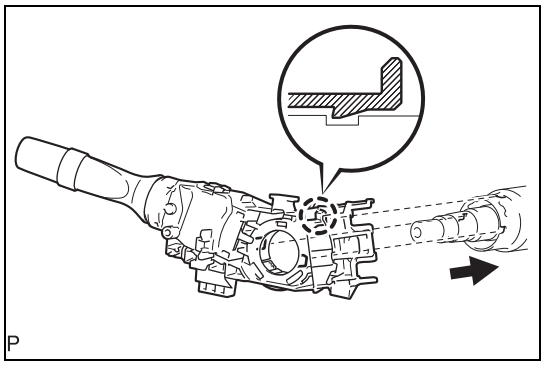

(2) With the band clamp loosened, insert the headlight dimmer switch ASSY on the steering column so that the convex and concave parts of the turning stopper match.
(3) Fit in the tab, and install the headlight dimmer switch ASSY.

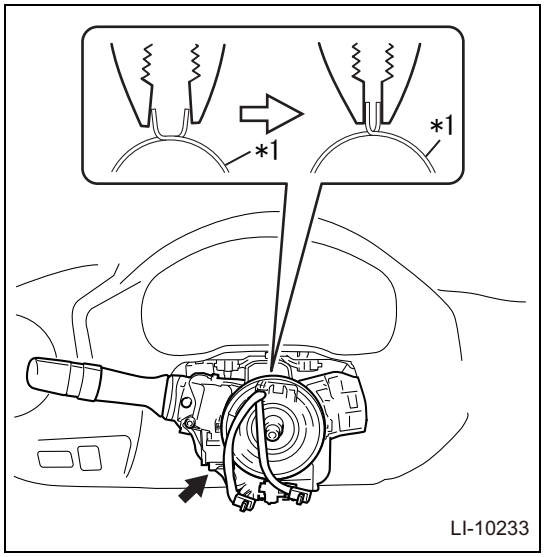

(4) As in the figure, install the band clamp.

Captions in illustration

*1	Band clamp

(5) Connect the connector.

2. Installation of the windshield wiper switch ASSY (Refer to WW - 23)
3. Installation of the steering roll connector SUB-ASSY (with steering sensor) (Refer to RS - 252)

Unit inspection

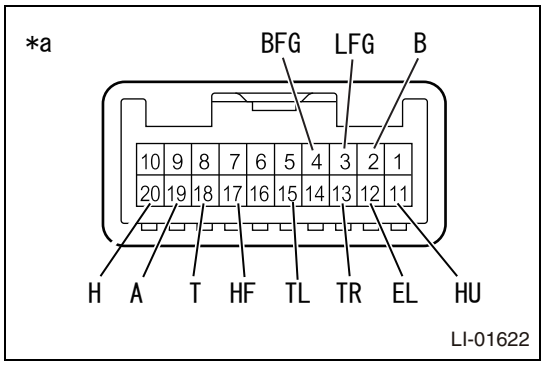

1. Inspection of the headlight dimmer switch ASSY
   (1) Measurement of the Resistance of the light control switch
      (a)Check the resistance between the connector terminals.

Resistance

Inspection terminals (Terminal symbol)	Inspection conditions	Standard value
18 (T) - 12 (EL)	Light control switch OFF	10 kΩ or more
20 (H) - 12 (EL)		10 kΩ or more
19 (A) - 12 (EL) [*1]		10 kΩ or more
18 (T) - 12 (EL)	Light control switch TAIL	Less than 1 Ω
18 (T) - 12 (EL)	Light control switch HEAD	Less than 1 Ω
20 (H) - 12 (EL)		Less than 1 Ω
19 (A) - 12 (EL) [*1]	Light control switch AUTO	Less than 1 Ω

*1: With light control system

   (2) Measurement of the Resistance of the dimmer switch
      (a)Check the resistance between the connector terminals.

Resistance

Inspection terminals (Terminal symbol)	Inspection conditions	Standard value
11 (HU) - 12 (EL)	Dimmer switch FLASH	Less than 1 Ω
17 (HF) - 12 (EL)		Less than 1 Ω
11 (HU) - 12 (EL)	Dimmer switch HI BEAM	Less than 1 Ω

NOTE:
"HI BEAM" inspection is performed when the light control switch is in the "HEAD" position.

   (3) Measurement of the Resistance of the turn signal switch
      (a)Check the resistance between the connector terminals.

Resistance

Inspection terminals (Terminal symbol)	Inspection conditions	Standard value
13 (TR) - 12 (EL)	Turn signal switch OFF	10 kΩ or more
15 (TL) - 12 (EL)		10 kΩ or more
13 (TR) - 12 (EL)	Turn signal switch (TURN R) ON	Less than 1 Ω
15 (TL) - 12 (EL)	Turn signal switch (TURN L) ON	Less than 1 Ω

(4) Measurement of the Resistance of the fog light switch

(a)Check the resistance between the connector terminals.

Resistance

Inspection terminals (Terminal symbol)	Inspection conditions	Standard value
4 (BFG) - 3 (LFG) [*1]	Fog light switch OFF	10 kΩ or more
4 (BFG) - 3 (LFG) [*1]	Fog light switch Fr	Less than 1 Ω

*1: With front fog lights

Captions in illustration

*a	Connector not connected (Headlight dimmer switch ASSY)

Hazard warning switch

Exploded view

For automatic air conditioning system :

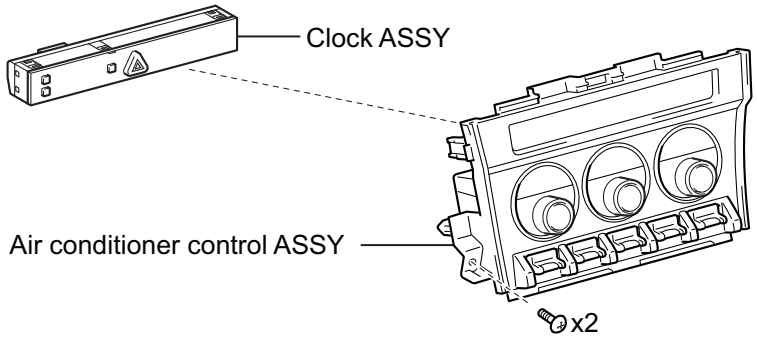

For manual air conditioning system :

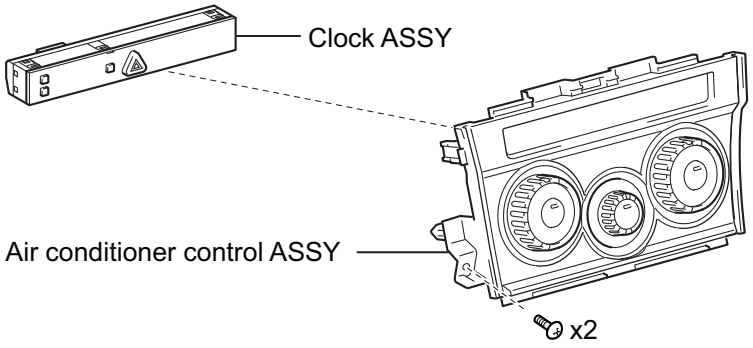

LI-10234

Removal

1. Removal of the air conditioner control ASSY (for automatic air conditioning systems) (Refer to AC - 170)
2. Removal of the air conditioner control ASSY (for manual air conditioning systems) (Refer to AC - 174)

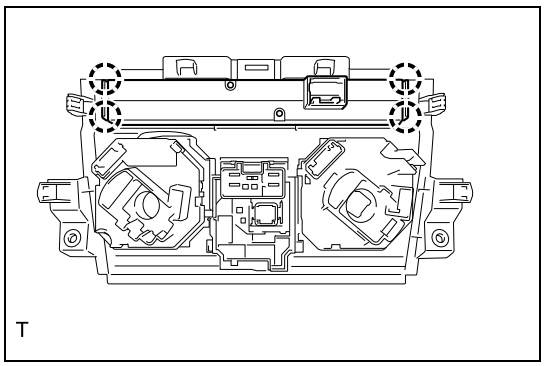

3. Removal of the clock ASSY
   (1) Release the 4 tabs, and remove the clock ASSY.

LE

Installation

1. Installation of the clock ASSY
   (1) Fit in the 4 tabs and install the clock ASSY.

2. Installation of the air conditioner control ASSY (for automatic air conditioning systems) (Refer to AC - 171)
3. Installation of the air conditioner control ASSY (for manual air conditioning systems) (Refer to AC - 178)

Unit inspection

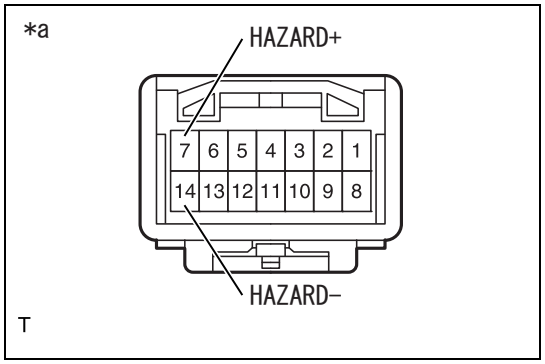

1. Inspection of the clock ASSY
   (1) Measurement of the resistance of the hazard warning signal switch
      (a)Measure the resistance between connector terminals when the hazard warning signal switch is operated.
      Resistance

Inspection terminals (Terminal symbol)	Inspection conditions	Standard value
7 (HAZARD+) - 14 (HAZARD-)	Switch OFF	10 kΩ or more
7 (HAZARD+) - 14 (HAZARD-)	Switch ON	Less than 1 Ω

   (2) Inspection of LED light (night-time illumination)
      (a)Inspect if the LED light turns on when battery voltage is applied to each connector terminal.

Criteria

Inspection terminals	Criteria
Battery positive →9 Battery ground →13	Light turns on.

Captions in illustration

*a	Connector not connected (Clock ASSY)

Stop light switch

Exploded view

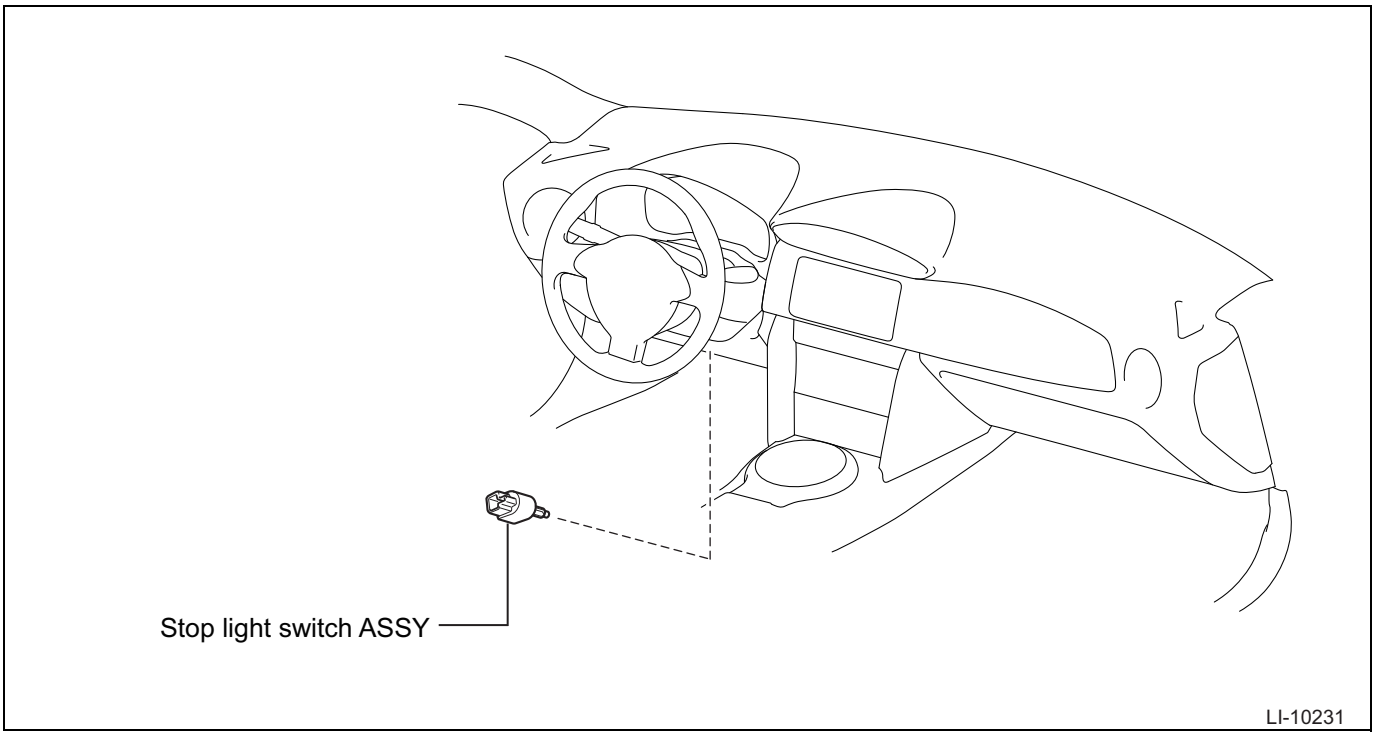

Removal

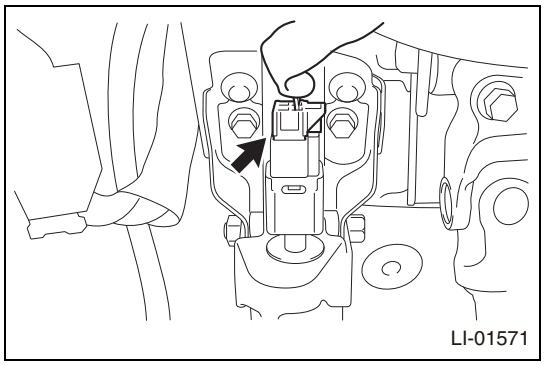

1. Removal of the stop light switch ASSY
   (1) Disconnect the connector.

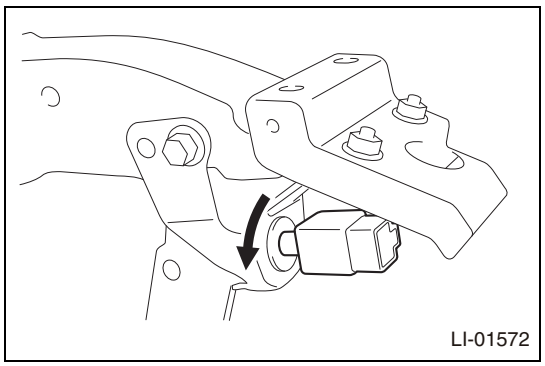

   (2) Turn in the direction in the figure, and remove the stop light switch ASSY.

Installation

1. Installation of the stop light switch ASSY

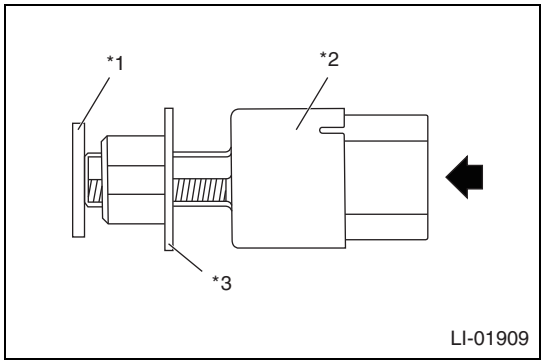

(1) Align the groove of the stop light switch ASSY mounting adjuster and the cutout portion of the push rod for stop light switch.

(2) Pull up the brake pedal and let the push rod of the stop light switch ASS stroke, then push in the stop lamp switch until it touches the stopper.

Captions in illustration

*1	Stopper
*2	Stop light switch ASSY
*3	Stop light switch ASSY mounting adjuster

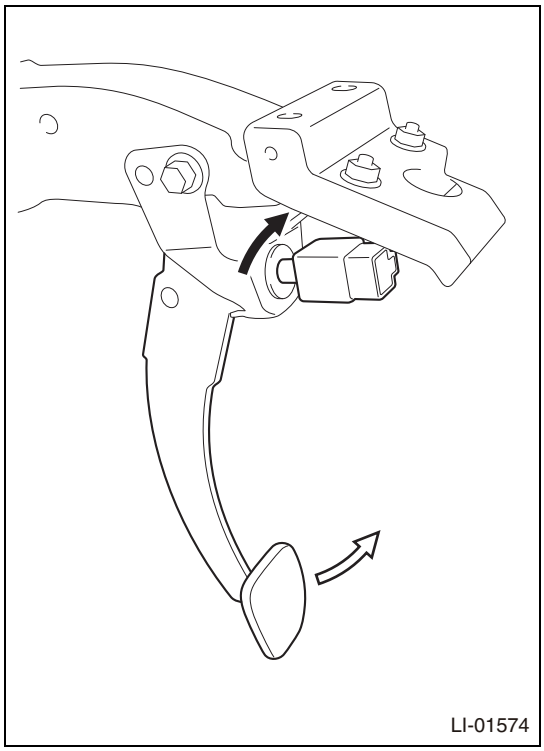

(3) Rotate the stop light switch by 45° clockwise and then secure it while holding the brake pedal towards you.

CAUTION:

- When disassembling or assembling the brake pedal, be sure to install the stop light switch ASSY last.
- When pressing the stop light switch to the stopper, do not push it too hard.
- The stop light switch ASSY should be tightened to the specified torque or less.

Standard value:T=3.0 N·m {30 kgf·cm} {2.2 ft·lbf}

(4) Check the brake pedal play when pushing the brake pedal with a force of less than 10 N {1 kgf, 2.2 lbf}.
Standard value: 0.5 - 2.7 mm {0.019 - 0.106 in}

(5) Connect the connector.

(6) Connect the battery ground terminal.

(7) Check that brake lights turn on.
NOTE:
Check that the stop light turns on after depressing the brake pedal by 5 mm (0.2 in) or more.

2. Operation check for the stop light switch ASSY

(1) Turn the ignition switch to OFF and connect the SSM4 to the DLC3.

(2) Turn the ignition switch to ON, follow the screen display of the SSM4, and display the data for [Stop Lamp Switch] and [Master cylinder pressure].

(3) Without depressing the brake pedal, check that the stop light switch is OFF.

(4) Slowly depress the brake pedal, measure the master cylinder pressure when the stop light switch changes from OFF to ON, and check that it is within the standard values.
Standard value: Less than 0.27 MPa

Unit inspection

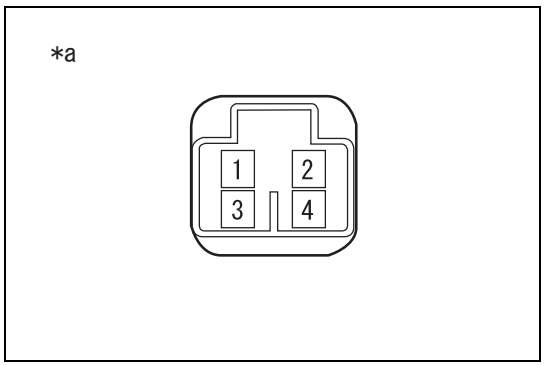

1. Inspection of the stop light switch ASSY.
   (1) Resistance check
      (a)Measure the resistance according to the following chart.

Resistance

Inspection terminals	Inspection conditions	Standard value
1 - 2	When the shaft is not pushed in	Less than 1 Ω
	When the shaft is pushed in	10 kΩ or more

Captions in illustration

*a	Connector not connected (Stop light switch ASSY)

Automatic light control sensor

Exploded view

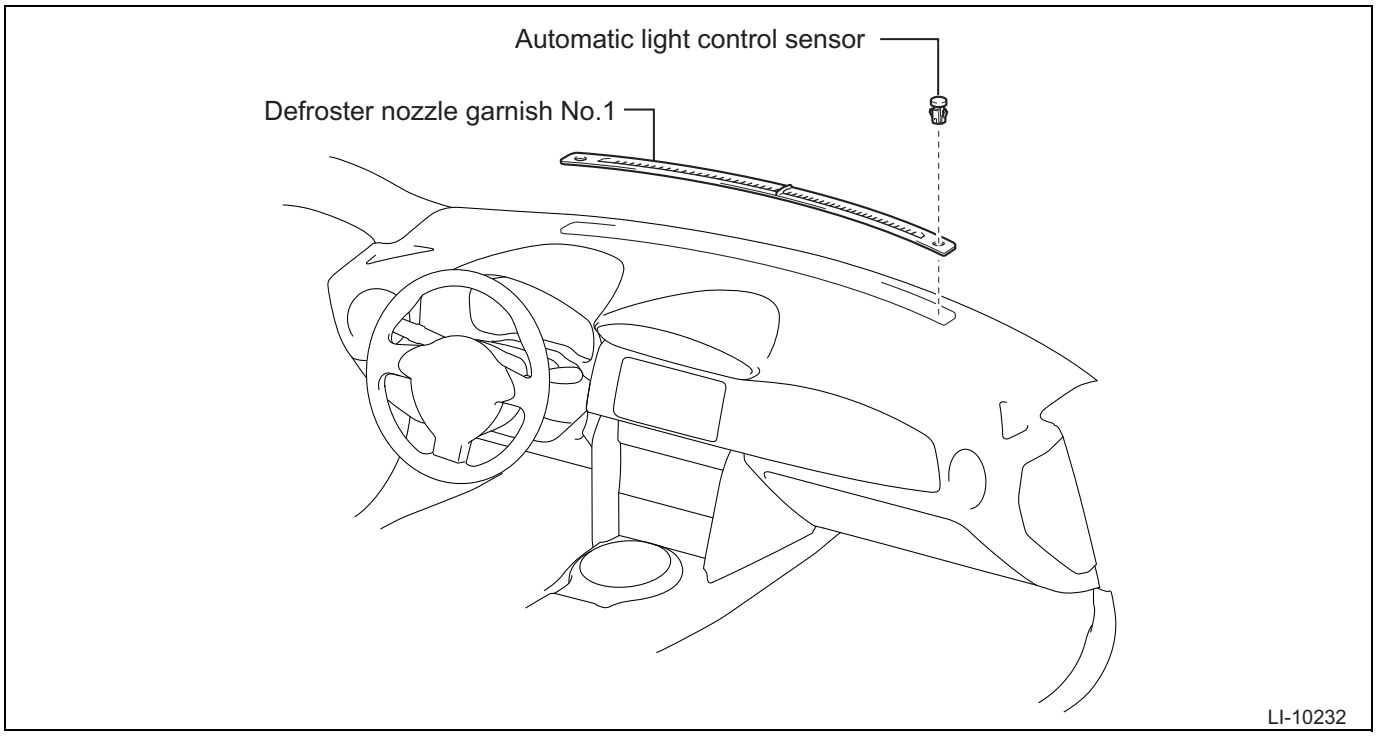

Removal

1. Disconnection of the defroster nozzle garnish NO.1 (Refer to AC - 162)

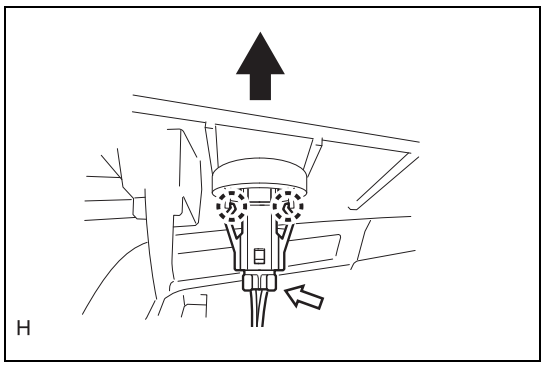

2. Removal of the automatic light control sensor
   (1) Disconnect the connector.
   (2) Release the 2 tabs, and remove the automatic light control sensor.

Installation

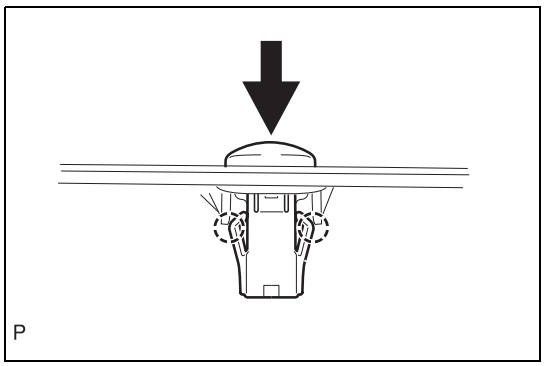

1. Installation of the automatic light control sensor
   (1) Fit in the 2 tabs, and install the automatic light control sensor.
   (2) Connect the connector.

2. Installation of the defroster nozzle garnish NO.1 (Refer to AC - 163)

On-vehicle inspection

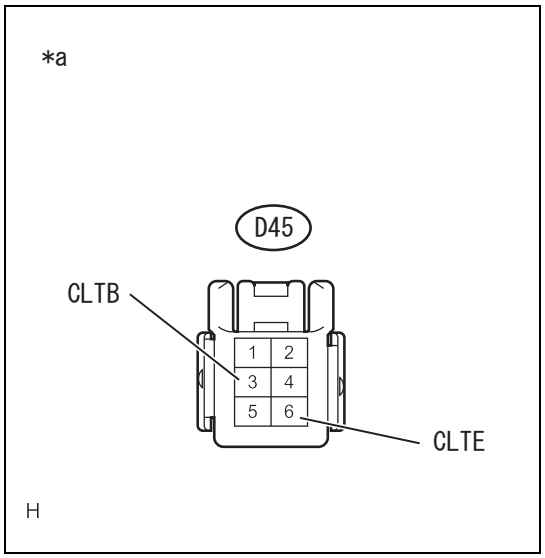

1. Inspection of the automatic light control sensor
   (1) Sensor power supply
      (a) Disconnect the connector D45 of the automatic light control sensor.
      (b) Measure the voltage according to the following chart.

Voltage

Inspection terminals (Terminal symbol)	Inspection conditions	Standard value
D45-3 (CLTB) - D45-6 (CLTE)	IG OFF →IG ON	11 to 14V

      (c) Measure the resistance according to the following chart.

Resistance

Inspection terminals (Terminal symbol)	Inspection conditions	Standard value
D45-6 (CLTE) - chassis ground	Always	Less than 1 Ω

Captions in illustration

*a	Front side of vehicle wiring harness connector (Automatic light control sensor)

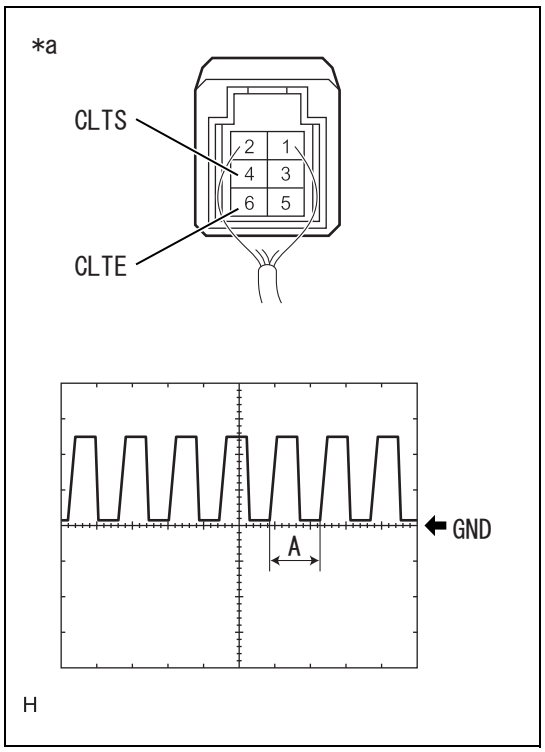

   (2) Sensor waveform
      (a) Connect the connector D45 of the automatic light control sensor.
      (b) Using a oscilloscope, inspect if a waveform is occurring between the terminals.
      CAUTION:
      With the connectors connected, perform this inspection from the rear of the connectors.
      NOTE:
      Match the oscilloscope settings with chart 1.

Chart 1

Item	Contents
Measuring terminal	D45-4 (CLTS) - D45-6 (CLTE)
Equipment setting	5 V/DIV, 5 ms/DIV
Measuring conditions	IG ON, light control switch is AUTO, automatic light control sensor is covered by something that doesn't let light through →exposed

Standard value (waveform)

Inspection terminals (Terminal symbol)	Inspection conditions	Standard value
D45-4 (CLTS) - D45-6 (CLTE)	IG ON, light control switch is AUTO, automatic light control sensor is covered by something that doesn't let light through →exposed	Shown in the figure

      NOTE:
      The brighter the area becomes, the shorter the A interval becomes.

Captions in illustration

*a	Connector connected (Automatic light control sensor)

Height control sensor

Exploded view

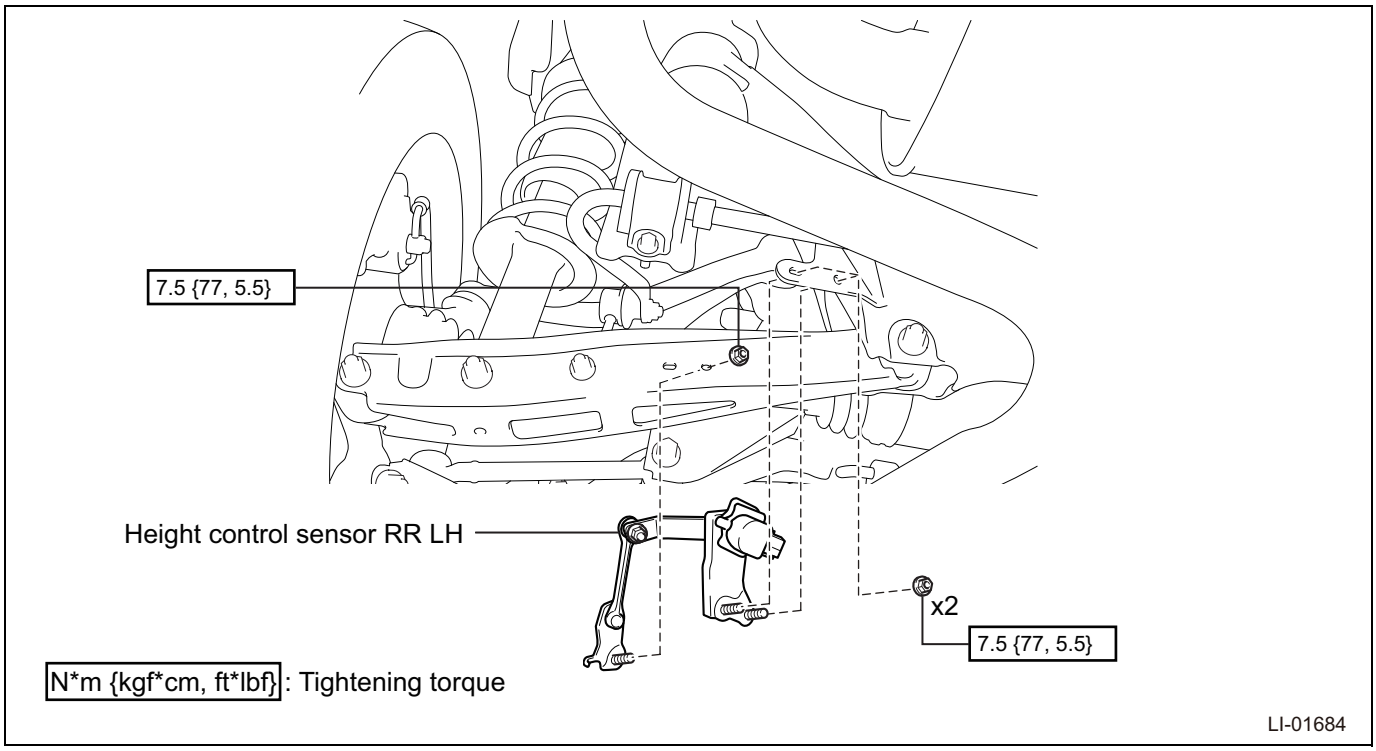

Removal

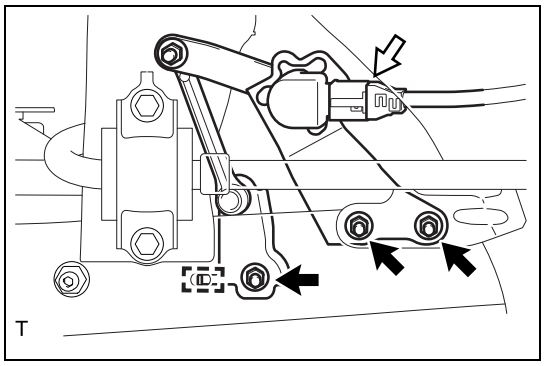

1. Removal of the height control sensor RR LH
   (1) Disconnect the connector.
   (2) Remove 3 nuts and remove the height control sensor RR LH.
   CAUTION:
   If you drop the height control sensor RR LH, replace it with a new one.

Installation

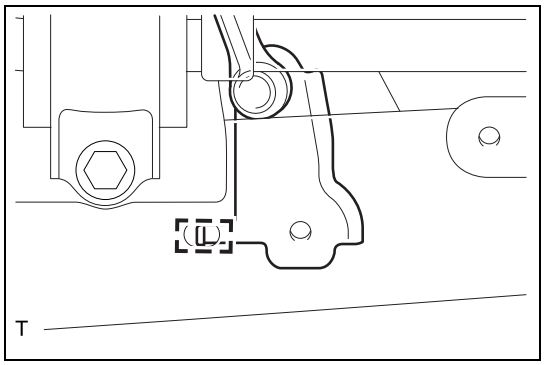

1. Installation of the height control sensor RR LH
   (1) Align the guide to the position in the figure, and install the height control sensor RR LH with 3 nuts.
   Standard value:T=7.5N·m {77kgf·cm} {5.5ft·lbf}
   (2) Connect the connector.

2. Initialization of the headlight leveling computer (Refer to LE - 38)
3. Headlight beam adjustment (Refer to LE - 51)

Unit inspection

1. Inspection of the height control sensor RR LH
   (1) Preparation before inspection
      (a)Connect 3 dry-cell batteries (1.5 V) in series.
      CAUTION:
      Do not use rechargeable dry-cell batteries. They may not output 1.5 V of voltage.

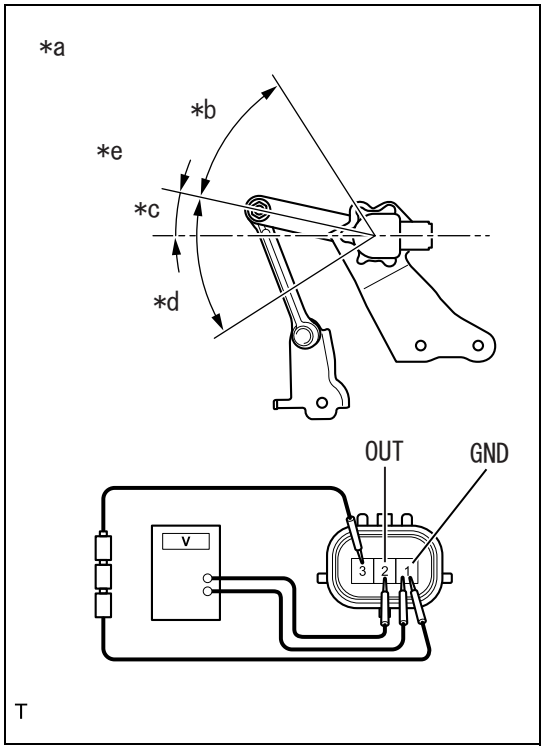

      (b)Connect the battery's positive terminal to the connector terminal 3, the battery ground to terminal 1, and apply 4.5 V of voltage between terminals 3 and 1.

   (2) Measuring voltage
      (a)With the voltage applied, measure the voltage between terminals when slowly moving the link up and down.

Voltage

Inspection terminals (Terminal symbol)	Link angle (vehicle height)	Standard value
2 (OUT) - 1 (GND)	+45° (high)	Approx. 4.5 V
2 (OUT) - 1 (GND)	-15° (standard position for inspection)	Approx. 2.5 V
2 (OUT) - 1 (GND)	-45° (low)	Approx. 0.5 V

Captions in illustration

*a	Connector not connected (Height control sensor RR LH)
*b	+45°
*c	-15°
*d	-45°
*e	Criteria

LE

CAUTION:
- Do not apply 5 V or more of voltage between the terminals.
- If you drop the height control sensor RR LH, replace it with a new one.

NOTE:
If the power source voltage changes, so will the output voltage.

Headlight leveling computer

Exploded view

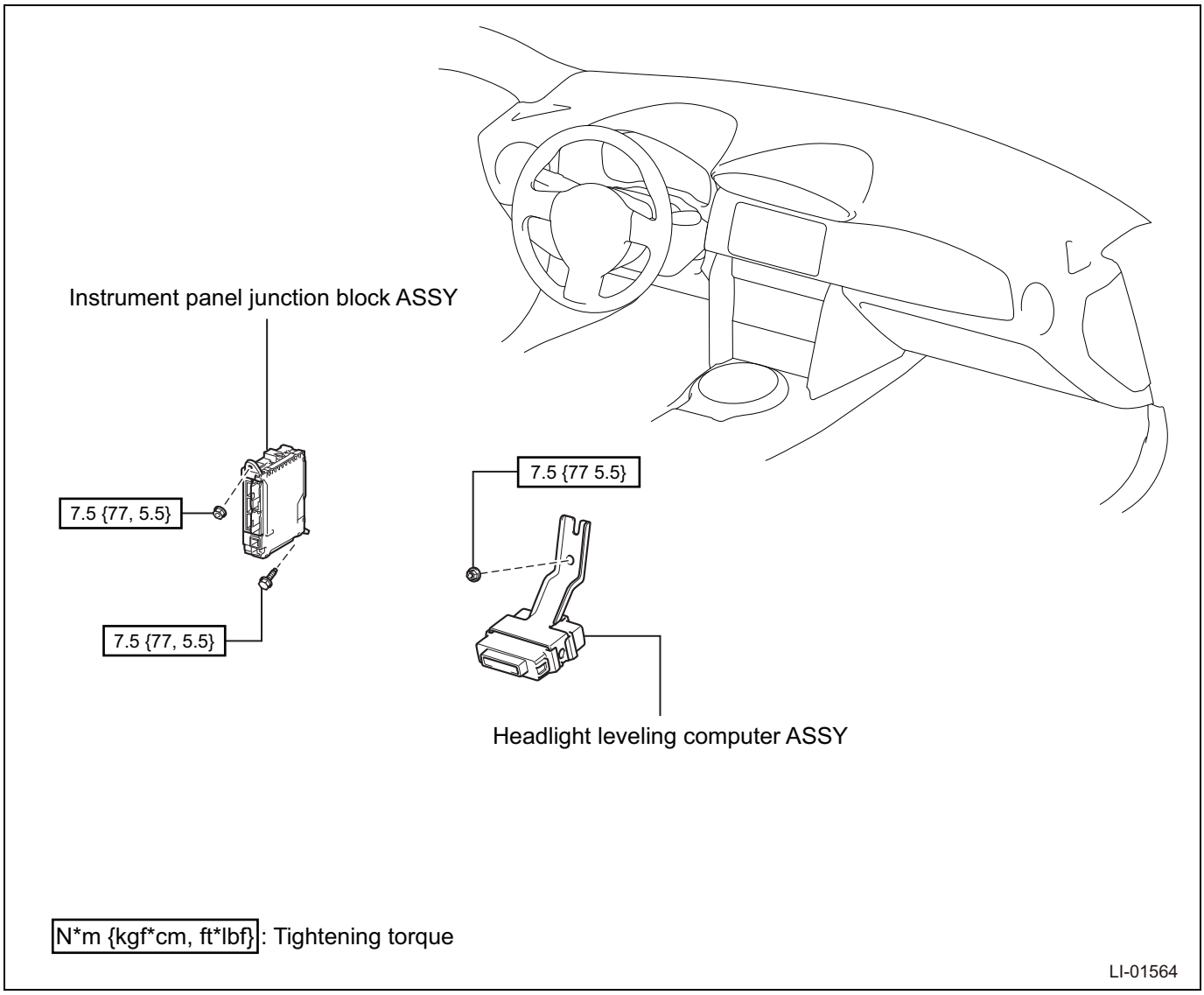

Removal

1. Removal of the power steering computer ASSY (Refer to PA - 40)
2. Removal of the instrument panel junction block ASSY (Refer to PD - 25)

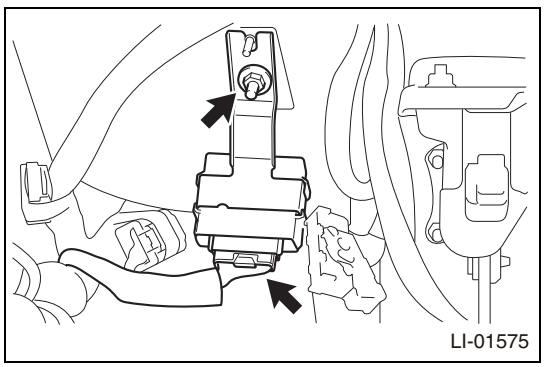

3. Removal of the headlight leveling computer ASSY
   (1) Disconnect the connector.
   (2) Remove the nut, and remove the headlight leveling computer ASSY.

LE

Installation

1. Installation of the headlight leveling computer ASSY
   (1) Use a nut to install the headlight leveling computer ASSY.

Standard value:T=7.5N·m {77kgf·cm} {5.5ft·lbf}

(2) Connect the connector.

2. Installation of the instrument panel junction block ASSY (Refer to PD - 28)
3. Installation of the power steering computer ASSY (Refer to PA - 41)
4. Initialization of the headlight leveling computer ASSY (Refer to LE - 38)
5. Headlight beam adjustment (Refer to LE - 51)

Turn signal flasher

Exploded view

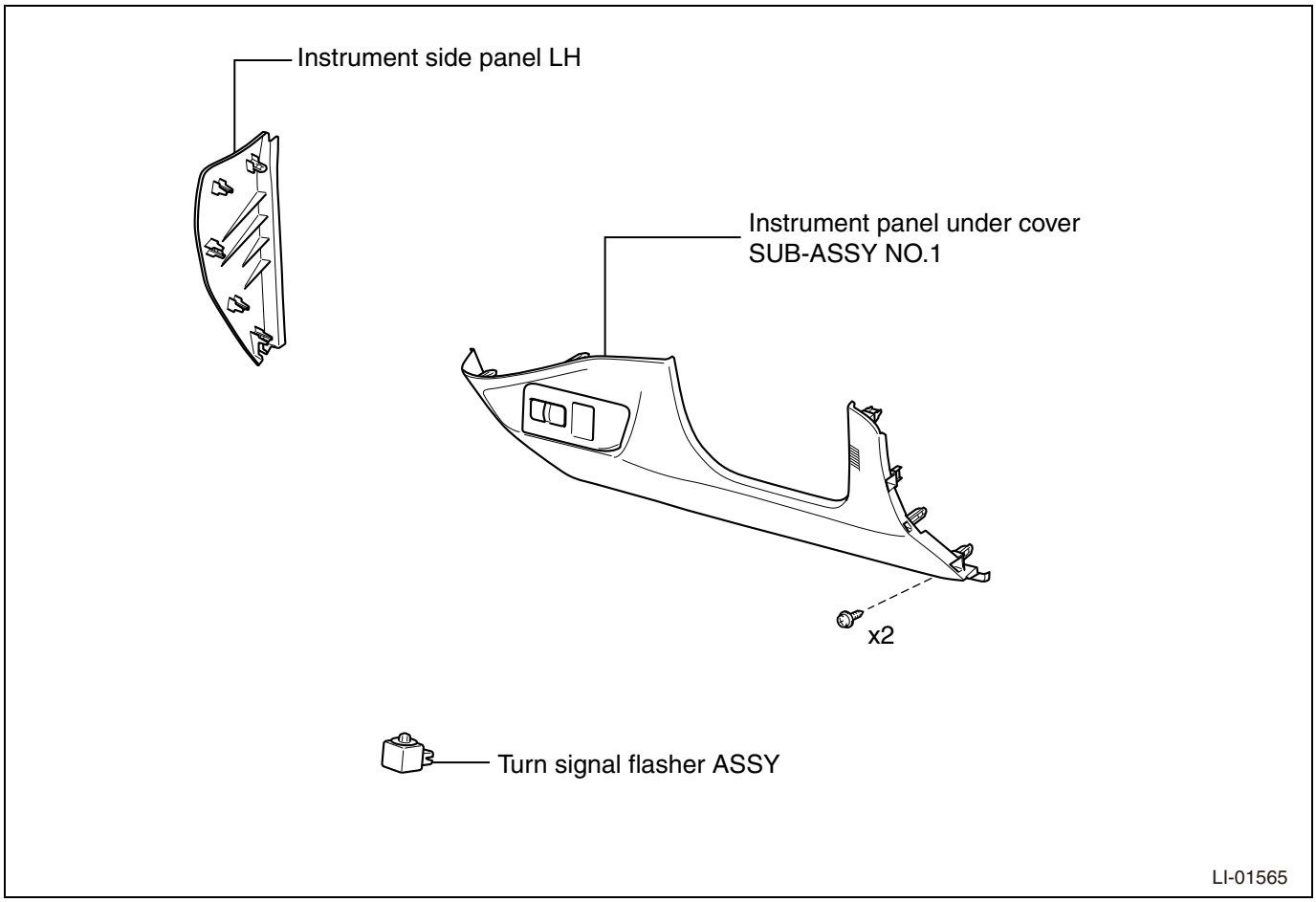

Removal

1. Removal of the instrument side panel RH (Refer to IT - 24)
2. Removal of the instrument panel under cover SUB-ASSY No. 1 (Refer to ME - 68)

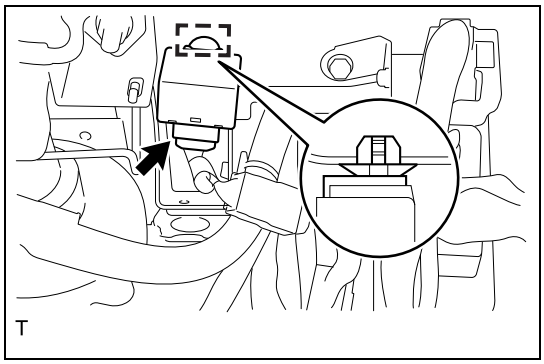

3. Removal of the turn signal flasher ASSY
   (1) Using a clip remover, release the clamp.
   (2) Disconnect the connector and remove the turn signal flasher ASSY.

Installation

1. Installation of the turn signal flasher ASSY
   (1) Connect the connector.
   (2) Fit in the clamp, and install the turn signal flasher ASSY.
2. Installation of the instrument panel under cover SUB-ASSY No.1 (Refer to ME - 69)
3. Installation of the instrument side panel RH (Refer to IT - 29)

On-vehicle inspection

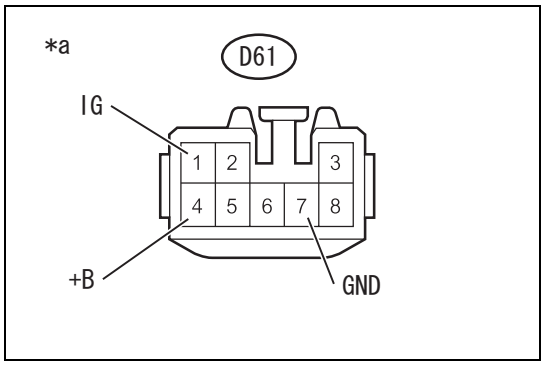

1. Inspection of the turn signal flasher ASSY
   (1) Inspection of input / output operation
      (a)Disconnect the connector D61 of the turn signal flasher ASSY.
      (b)Measure the voltage between the each terminal of the vehicle wiring harness connector and the chassis ground.

Voltage

Inspection terminals (Terminal symbol)	Inspection conditions	Standard value
D61-4 (+B) - chassis ground	IG OFF	11 to 14 V
D61-1 (IG) - chassis ground	IG OFF →ON	Less than 1 V →11 to 14 V

      (c)Measure the resistance between the each terminal of the vehicle wiring harness connector and the chassis ground.

Resistance

Inspection terminals (Terminal symbol)	Inspection conditions	Standard value
D61-7 (GND) - chassis ground	Always	Less than 1 Ω

Captions in illustration

*a	Front side of vehicle wiring harness connector (Turn signal flasher ASSY)

      (d)Connect the connector D61 of the turn signal flasher ASSY.

      (e)Measure the voltage between each connector terminal and the chassis ground.

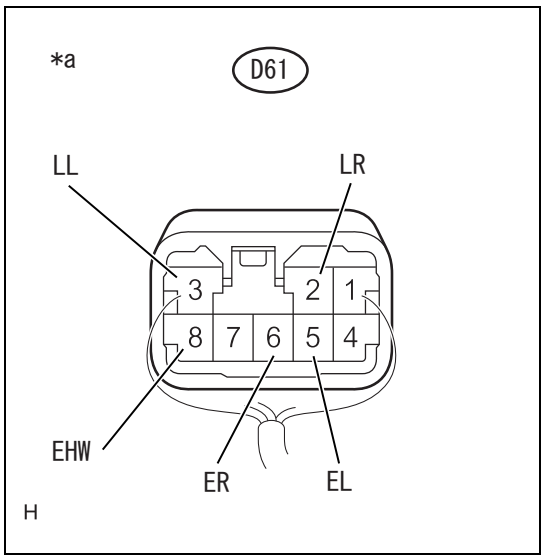

Captions in illustration

*a	Connector connected (Turn signal flasher ASSY)

Voltage

Inspection terminals (Terminal symbol)	Inspection conditions	Standard value
D61-6 (ER) - chassis ground	Turn signal switch (TURN R) OFF →ON	9 V or more →less than 1 V
D61-5 (EL) - chassis ground	Turn signal switch (TURN L) OFF →ON	9 V or more →less than 1 V
D61-8 (EHW) - chassis ground	Hazard switch OFF →ON	9 V or more →less than 1 V
D61-2 (LR) - chassis ground	Turn signal switch (TURN R) OFF →ON	Repeats going from less than 1 V →less than 1 V ←→9 V or more, 60 to 120 times per minute.
D61-3 (LL) - chassis ground	Turn signal switch (TURN L) OFF →ON	Repeats going from less than 1 V →less than 1 V ←→9 V or more, 60 to 120 times per minute.
D61-2 (LR) - chassis ground	Hazard switch OFF →ON	Repeats going from less than 1 V →less than 1 V ←→9 V or more, 60 to 120 times per minute.
D61-3 (LL) - chassis ground		

Relay

Unit inspection

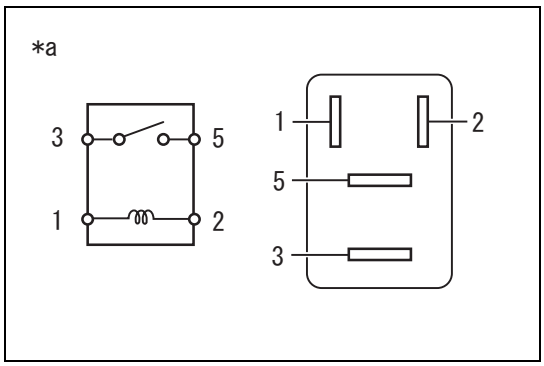

1. Inspection of the H-LP relay
   (1) Measure the resistance between connector terminals.

Resistance

Inspection terminals	Inspection conditions	Standard value
3 - 5	When battery voltage is not applied between terminals 1 and 2.	10 kΩ or more
	When battery voltage is applied between terminals 1 and 2.	Less than 1 Ω

Captions in illustration

*a	Relay not connected (H-LP relay)

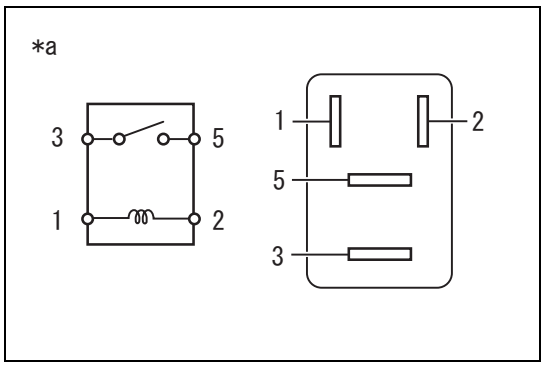

2. Inspection of the DIM relay
   (1) Measure the resistance between connector terminals.

Resistance

Inspection terminals	Inspection conditions	Standard value
3 - 5	When battery voltage is not applied between terminals 1 and 2.	10 kΩ or more
	When battery voltage is applied between terminals 1 and 2.	Less than 1 Ω

Captions in illustration

*a	Relay not connected (DIM relay)

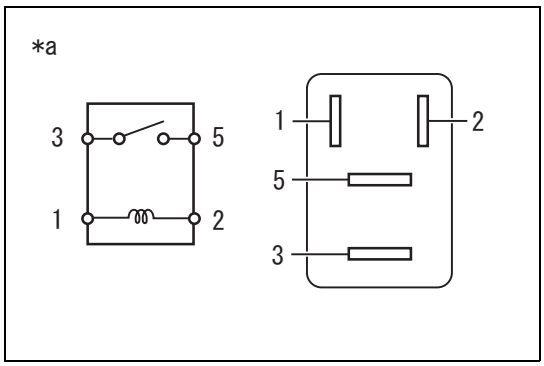

3. Inspection of the RR FOG relay
   (1) Measure the resistance between connector terminals.

Resistance

Inspection terminals	Inspection conditions	Standard value
3 - 5	When battery voltage is not applied between terminals 1 and 2.	10 kΩ or more
	When battery voltage is applied between terminals 1 and 2.	Less than 1 Ω

Captions in illustration

*a	Relay not connected (RR FOG relay)

Horn

Horn system

Parts location HO-2
Symptom table HO-2
How to troubleshoot HO-3
Check list for interview HO-4

Horn

Exploded view HO-5
Removal HO-5
Installation HO-6
Unit inspection HO-6

Horn system

Parts location

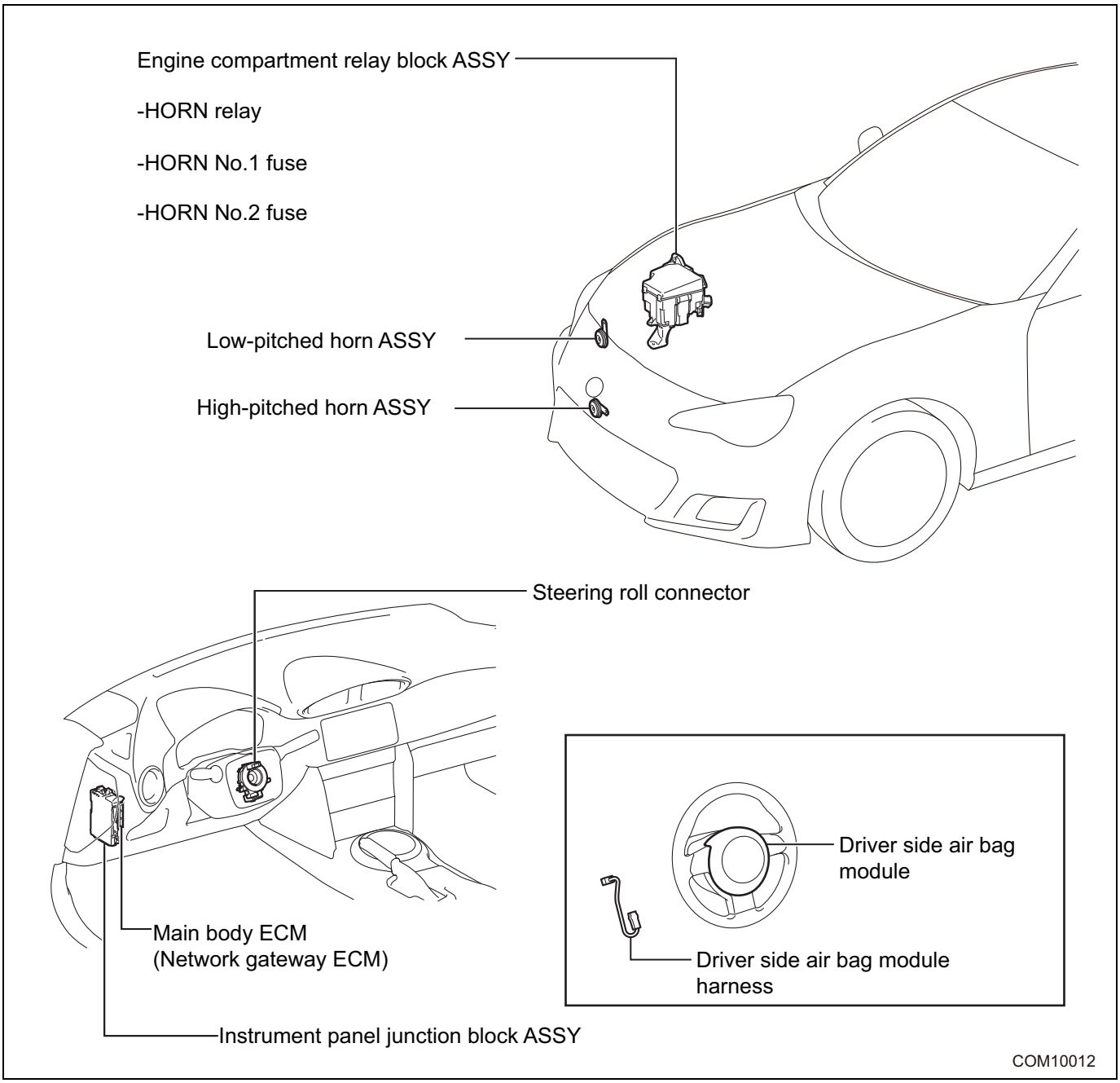

Symptom table

Horn system

HO

Symptoms	Inspection items	Reference pages
Both horns do not sound.	HORN NO.1 fuse	-
	HORN NO.2 fuse	-
	HORN relay	-
	Driver side air bag module	RS - 246
	Steering roll connector	RS - 254
	Vehicle wiring harness and connector	-
Horn doesn't stop sounding.	HORN relay	-
	Vehicle wiring harness and connector	-

Symptoms	Inspection items	Reference pages
High-pitched horn doesn't sound (low-pitched horn sounds normally).	High-pitched horn ASSY	HO - 6
	Vehicle wiring harness and connector	-
Low-pitched horn doesn't sound (high-pitched horn sounds normally).	Low-pitched horn ASSY	HO - 6
	Vehicle wiring harness and connector	-

How to troubleshoot

1	Bring in the car

Next

2	Interview and phenomenon check

(1) Interview and phenomenon check (Refer to HO - 4)

Next

3	Symptom table

(1) Symptom table (Refer to HO - 2)
Result

Result	Go to
Not applicable to the symptom table.	A
Applicable to the symptom table.	B

B → Go to Step 5.

A

4	Based on the trouble phenomenon, perform troubleshooting following the steps below.

(1) Unit inspection

Next

5	Adjustment, repair, or replacement

Next

6	Confirmation test

Next

Complete

Check list for interview

Horn System Diagnosis Checklist for Interview

Year/date of vehicle bring-in: Year Month Date

Name				Registration No.		First registration	Year Month Date
				Vehicle model		Frame No.	
Front		Engineer		Engine type		Odometer reading	

Customer specified content

Date when trouble occurred (from when)	Year Month Date Time		
Frequency of occurrence	Continuous Sometimes (times/day, times/month)		
Condition of trouble occurrence			
Weather	Fine / Cloudy / Rainy / Snowy / Other ( )	Temperature	Approx. ( ) °C
Road	Inner city Suburbs Highway Others ( )		Paved road / Unpaved road

Trouble symptom

- ☐ Horn does not sound.
- ☐ Others

HO

Horn

Exploded view

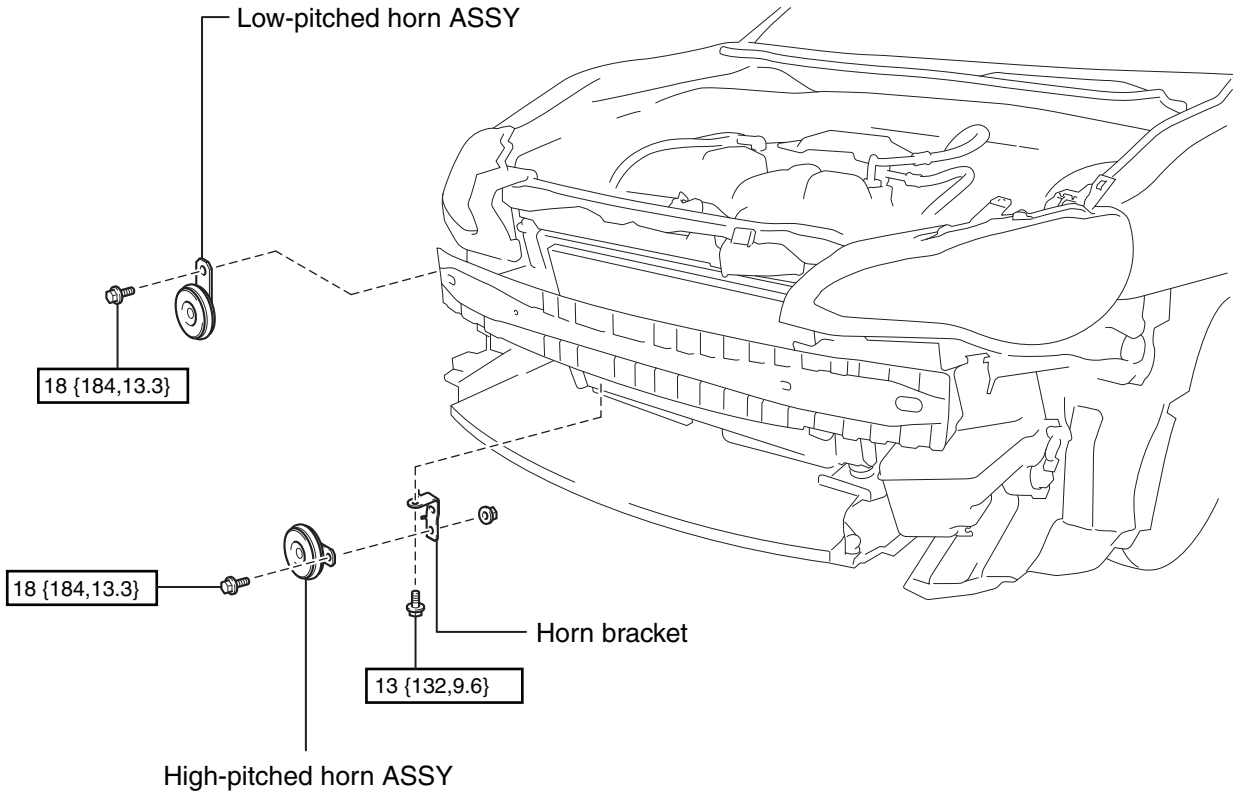

N•m {kgf•cm, ft•lbf}: Tightening torque

COM00207

Removal

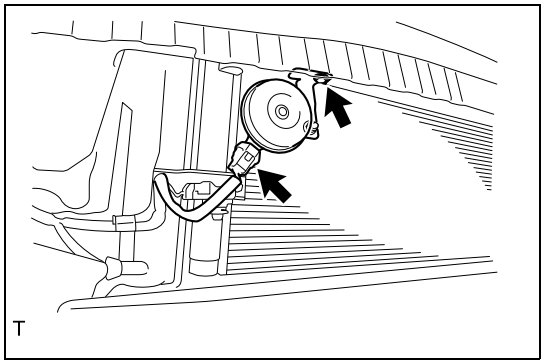

1. Removal of the high-pitched horn ASSY
   (1) Remove the front bumper cover. (Refer to ET - 3)
   (2) Disconnect the connector.
   (3) Remove the bolt, and remove the high-pitched horn ASSY as a unit with the horn bracket.

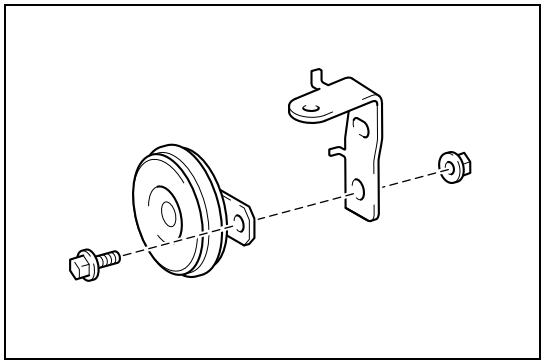

2. Removal of the horn bracket
   (1) Remove the bolt and the nut, and remove the horn bracket from the high-pitched horn ASSY.

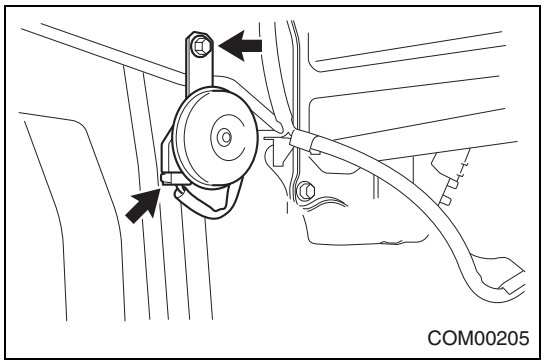

3. Removal of the low-pitched horn ASSY
   (1) Turn over the mud guard RH.
   (2) Disconnect the connector.
   (3) Remove the bolt, and remove the low-pitched horn ASSY.

Installation

1. Installation of the low-pitched horn ASSY
   (1) Using the bolt, install the low-pitched horn ASSY.
   Standard value:T=18N·m {184kgf·cm} {13.3ft·lbf}
   (2) Connect the connector.
2. Installation of the horn bracket
   (1) Using the bolt and nut, install the horn bracket on the high-pitched horn ASSY.
   Standard value:T=18N·m {184kgf·cm} {13.3ft·lbf}
3. Installation of the high-pitched horn ASSY
   (1) Using the bolt, install the high-pitched horn ASSY as a unit with the horn bracket.
   Standard value:T=13N·m {132kgf·cm} {9.6ft·lbf}
   (2) Connect the connector.
4. Installation of the front bumper cover (Refer to ET - 12)

Unit inspection

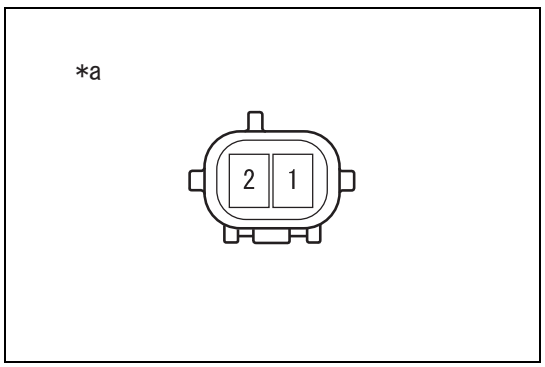

1. Inspection of the high-pitched horn ASSY
   (1) Inspect if the high-pitched horn ASSY sounds when battery voltage is applied between each connector terminal.

Criteria

Inspection terminals	Criteria
Battery positive →1 Battery ground →2	The high-pitched horn ASSY sounds.

Captions in illustration

*a	Connector not connected (High-pitched horn ASSY)

HO

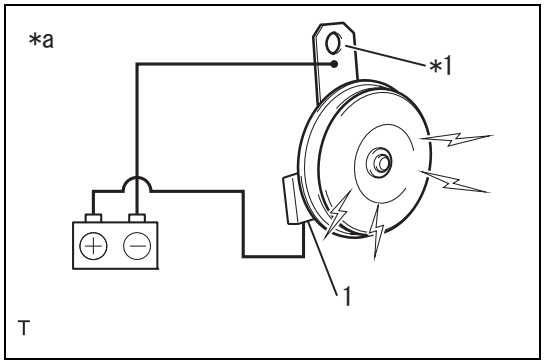

2. Inspection of the low-pitched horn ASSY
   (1) Inspect if the low-pitched horn ASSY sounds when battery voltage is applied between the terminal and the bracket.

Criteria

Inspection terminals	Criteria
Battery positive →1 Battery ground →bracket	The low-pitched horn ASSY sounds.

Captions in illustration

*1	Bracket
*a	Connector not connected (Low-pitched horn ASSY)

Body exterior

Front bumper
Exploded view ET-3
Removal ET-4
Disassembly ET-6
Assembly ET-9
Installation ET-12

Front under spoiler
Exploded view ET-14
Removal ET-14
Installation ET-15

Front bumper molding
Exploded view ET-16
Replacement ET-16

Rear bumper
Exploded view ET-18
Removal ET-19
Disassembly ET-22
Assembly ET-24
Installation ET-26

Rear under spoiler
Exploded view ET-28
Removal ET-28
Installation ET-29

Rear bumper stripe
Exploded view ET-30
Replacement ET-30

Rear spoiler
Exploded view ET-32
Removal ET-33
Removal (tS model) ET-34
Installation ET-34
Installation (tS model) ET-35

Side under spoiler
Exploded view ET-36
Removal ET-36
Installation ET-37

Name plate
Exploded view ET-38
Removal ET-38
Installation ET-40

Front door weather strip
Exploded view ET-41
Removal ET-42
Installation ET-43

Roof drip side finish molding
Exploded view ET-45
Removal ET-45
Installation ET-46

Front fender garnish
Exploded view ET-49
Removal ET-49
Installation ET-50

Trunk garnish
Exploded view ET-51
Removal ET-51
Installation ET-52

Front bumper

Exploded view

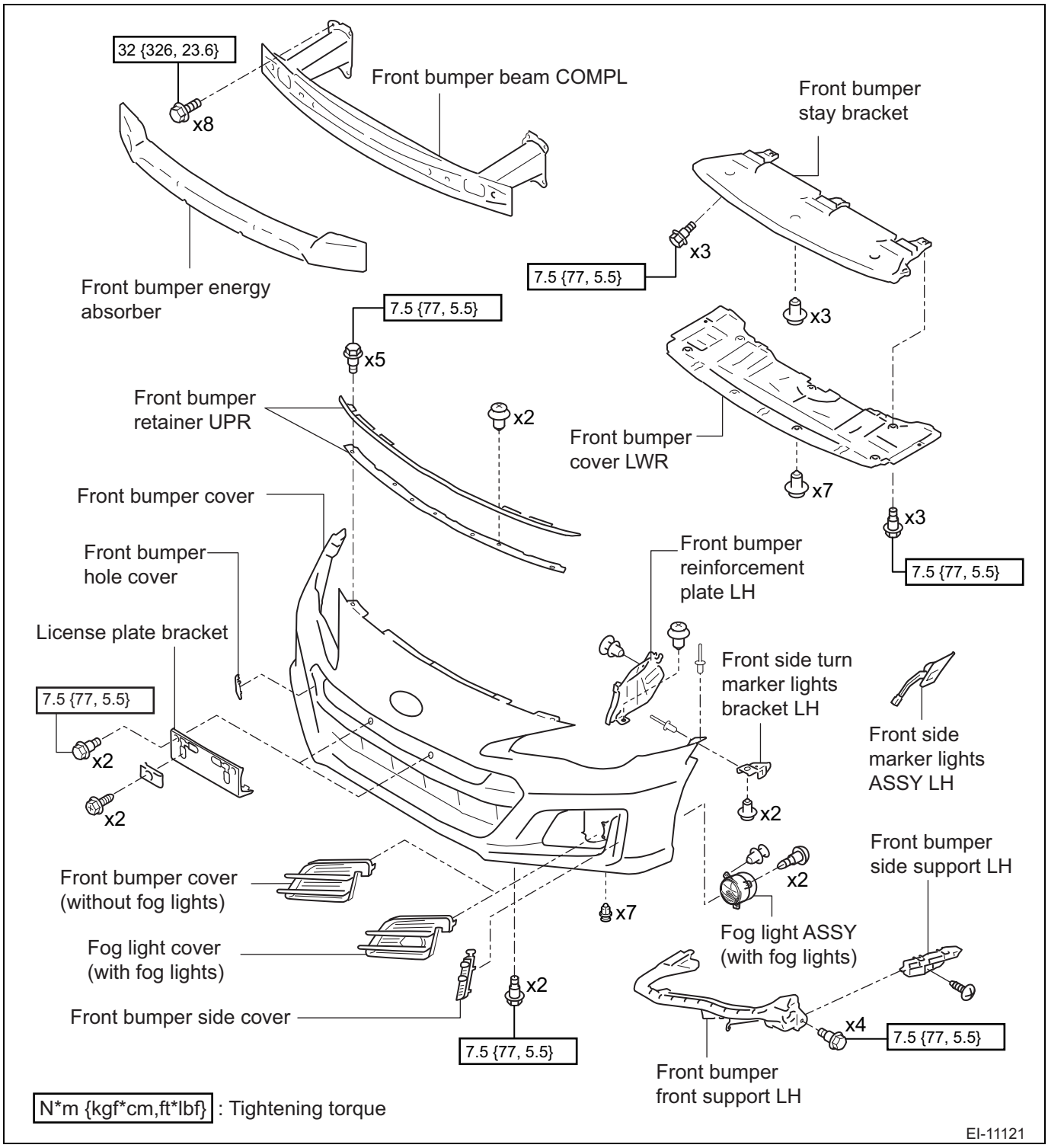

ET

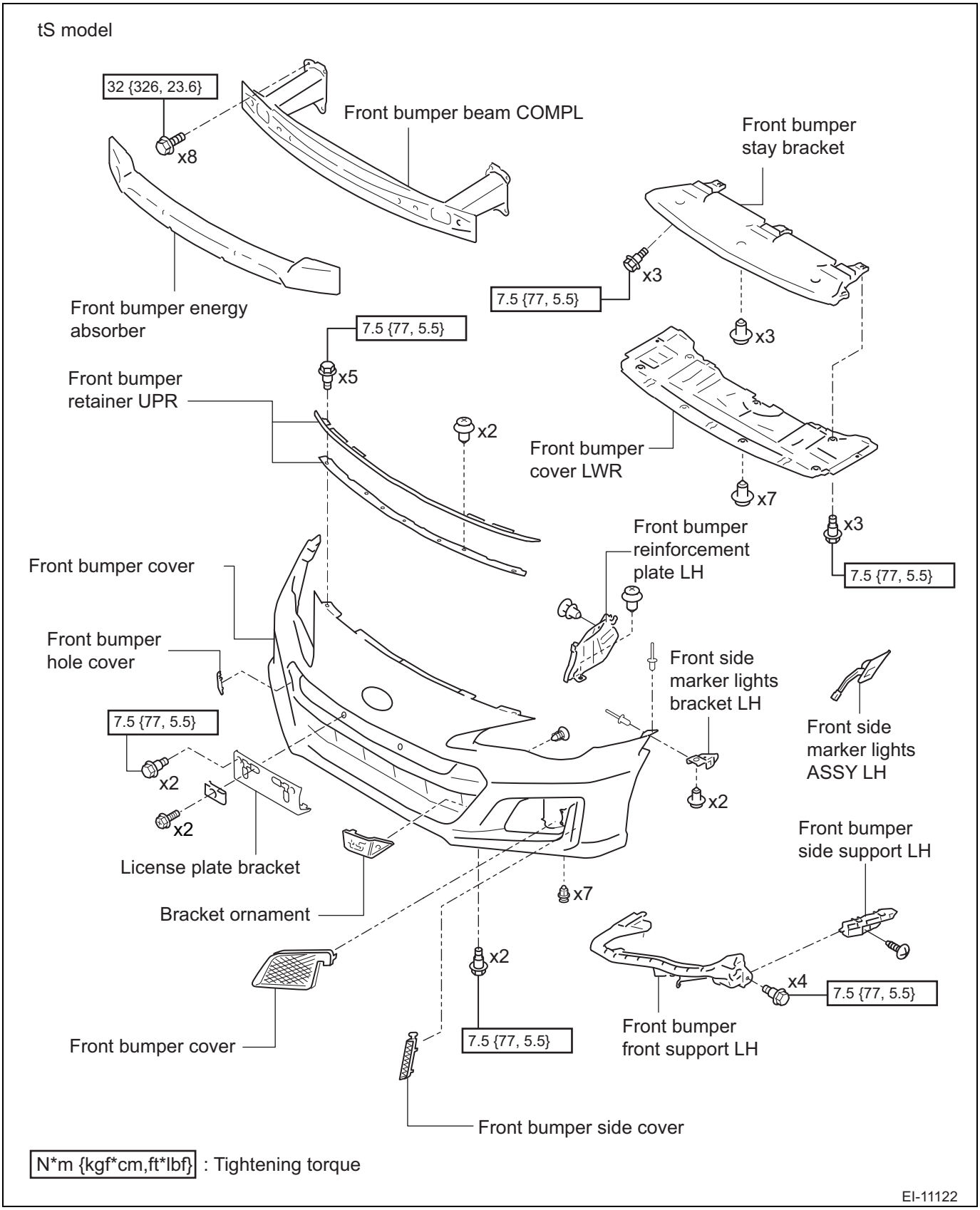

ET

Removal

1. Removal of the front side marker light ASSY LH (Refer to LE - 57)

2. Removal of the front side marker light ASSY RH
   NOTE:
   Remove the part in the same manner as LH side.

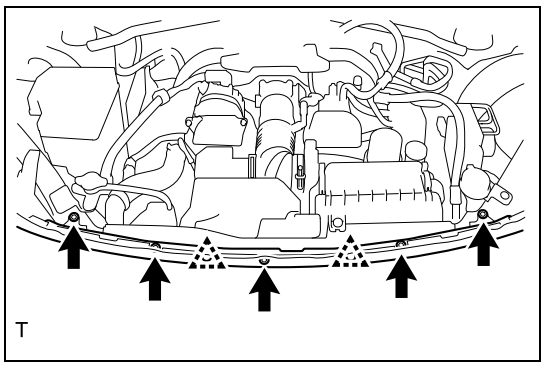
T

3. Removal of the front bumper retainer UPR
   (1) Remove the 2 clips.
   (2) Remove the 5 bolts, and remove the front bumper retainer UPR.

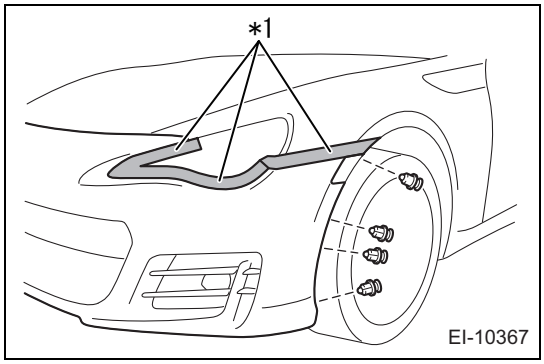

4. Removal of the front bumper cover
   (1) Apply protective tape to the location shown in the figure.

Captions in illustration

*1	Protective tape

   NOTE:
   Perform same procedures for the RH side.
   (2) Remove the 4 clips.
   NOTE:
   Perform same procedures for the RH side.

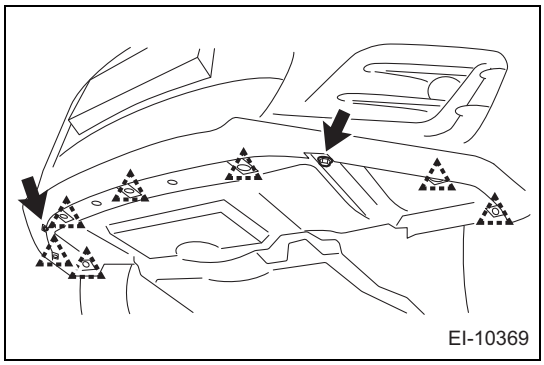

   (3) Remove the 7 clips.
   (4) Remove the 2 bolts.

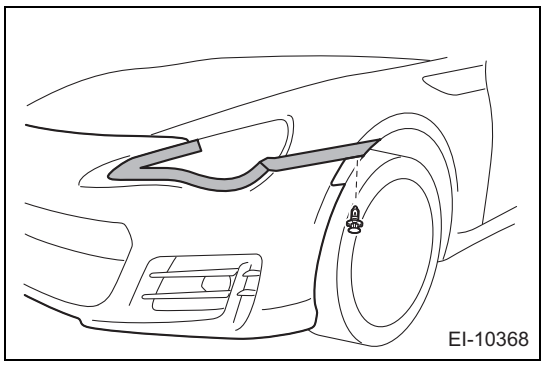

   (5) Remove the clip.
   NOTE:
   Perform same procedures for the RH side.

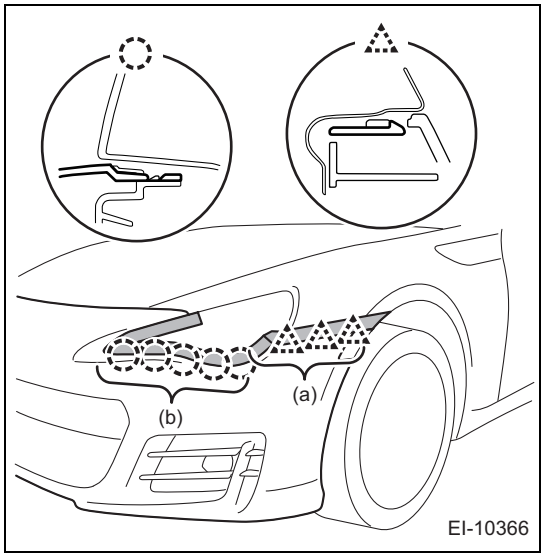

(6) Pull the front bumper cover in the direction of the arrow in the figure, and release the 8 claws.
NOTE:
1. Release 3 claws (a) located on the side of the vehicle by pulling the bumper cover at a right angle to the surface.
2. Check that the claws (a) are released.
3. Release 5 claws (b) located on the front side of the vehicle by pulling the bumper cover towards the front of the vehicle.
4. Perform same procedures for the RH side.

(7) Disconnect each connector, and remove the front bumper cover.

Disassembly

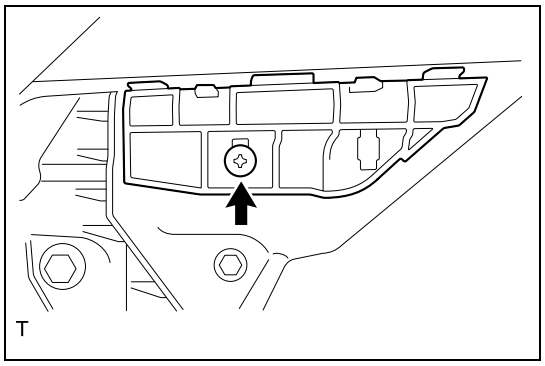

1. Removal of the front bumper side support LH
(1) Remove the screw.

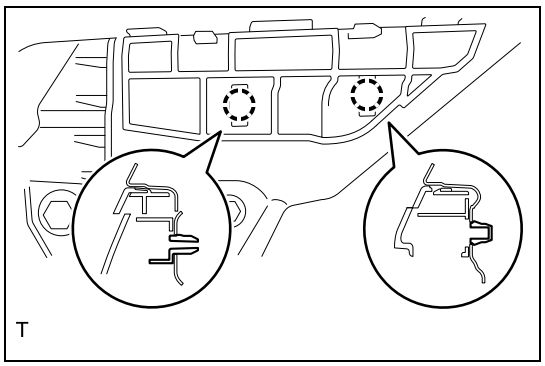

(2) Release the 2 claws, and remove the front bumper side support LH.

2. Removal of the front bumper side support RH
NOTE:
Remove the part in the same manner as LH side.

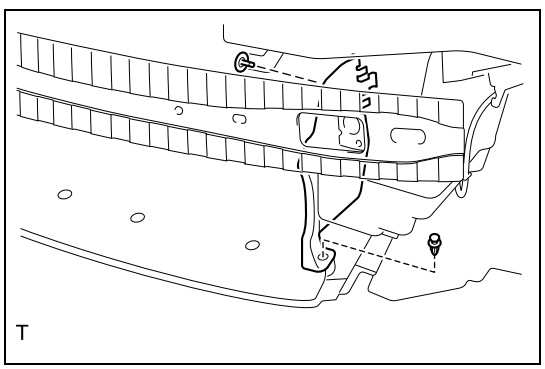

3. Removal of front bumper beam plate LH
(1) Remove the 2 clips, and remove the front bumper beam plate LH.

ET

4. Removal of front bumper beam plate RH
   NOTE:
   Remove the part in the same manner as LH side.

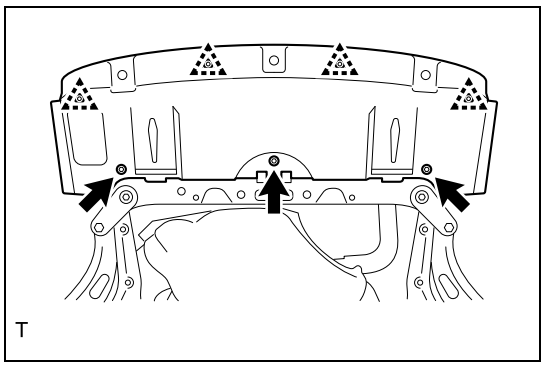
T

5. Removal of the front bumper cover LWR
   (1) Remove the 3 bolts.
   (2) Remove the 4 clips, and remove the front bumper cover LWR.

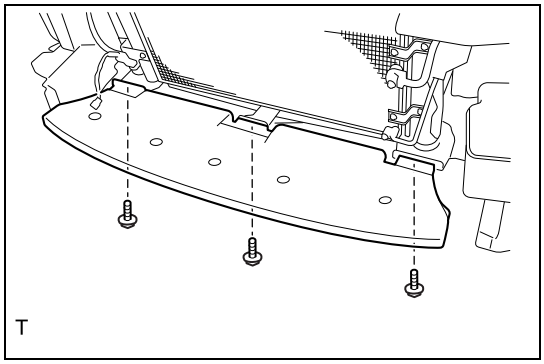
T

6. Removal of the front bumper stay bracket
   (1) Remove the 3 bolts, and remove the front bumper stay bracket.

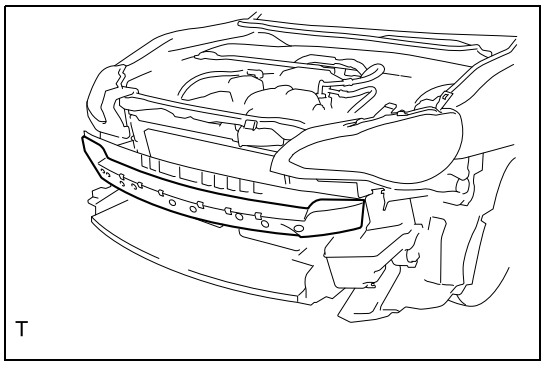
T

7. Removal of the front bumper energy absorber
   (1) Remove the front bumper energy absorber.

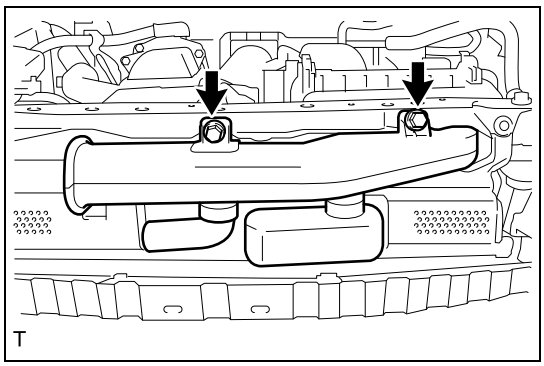
T

8. Removal of air cleaner duct
   (1) Remove 2 bolts, and remove the air cleaner duct.

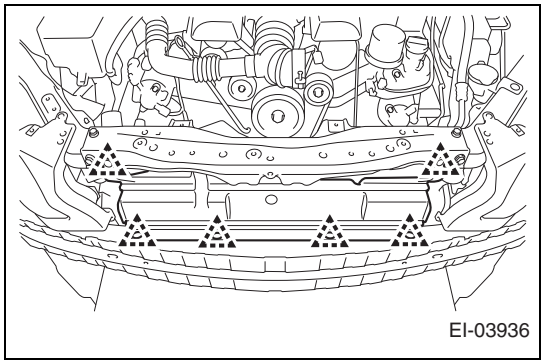

9. Removal of the radiator cover plate
   (1) Remove the 6 clips, and remove the radiator cover plate.
10. Removal of the high-pitched horn ASSY (Refer to HO - 5)
11. Removal of windshield washer tank (Refer to WW - 30)

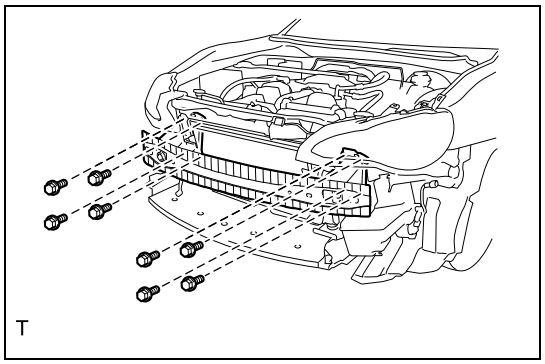

12. Removal of front bumper beam COMPL
    (1) Remove the 8 bolts, and remove the front bumper beam COMPL.
13. Removal of the fog light ASSY LH (when there are fog lights) (Refer to LE - 54)
14. Removal of the fog light ASSY RH (when there are fog lights)
    NOTE:
    Remove the part in the same manner as LH side.

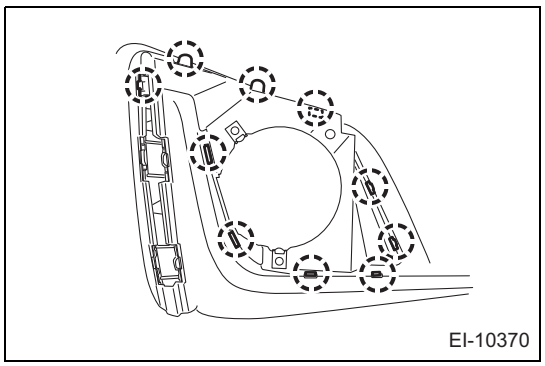

15. Removal of the fog light cover LH
    (1) Release the 10 claws, and remove the fog light cover LH.
16. Removal of the fog light cover RH
    NOTE:
    Remove the part in the same manner as LH side.

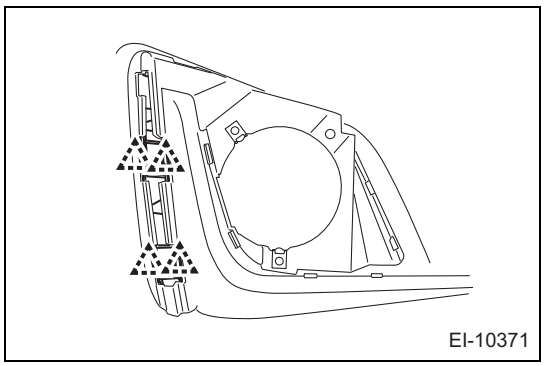

17. Removal of the front bumper side cover LH
    (1) Release the 4 claws, and remove the front bumper side cover LH.

ET

18. Removal of the front bumper side cover RH
    NOTE:
    Remove the part in the same manner as LH side.

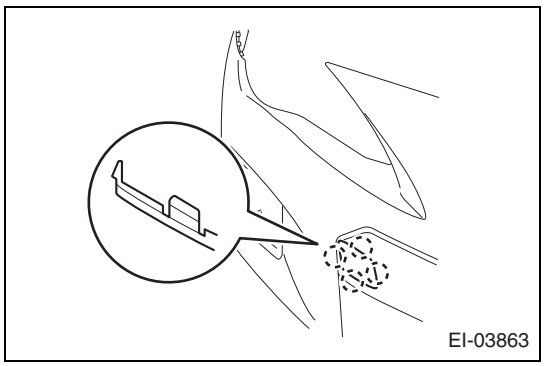

19. Removal of the front bumper hole cover
    (1) Release the 4 claws, and remove the front bumper hole cover.

Assembly

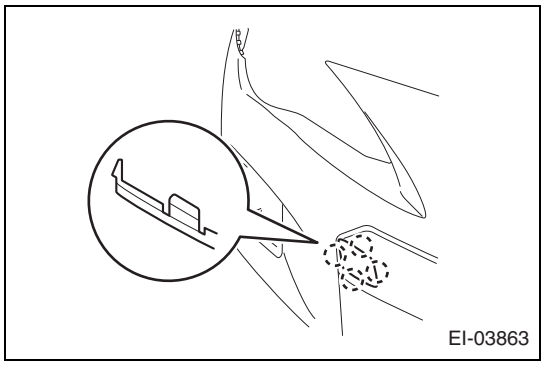

1. Installation of the front bumper hole cover
   (1) Fit in the 4 claws and install the front bumper hole cover.

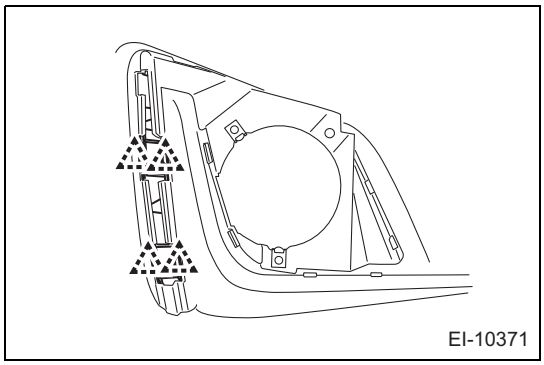

2. Installation of the front bumper side cover LH
   (1) Fit in the 4 claws and install the front bumper side cover LH.

3. Installation of the front bumper side cover RH
   NOTE:
   Install the part in the same manner as LH side.

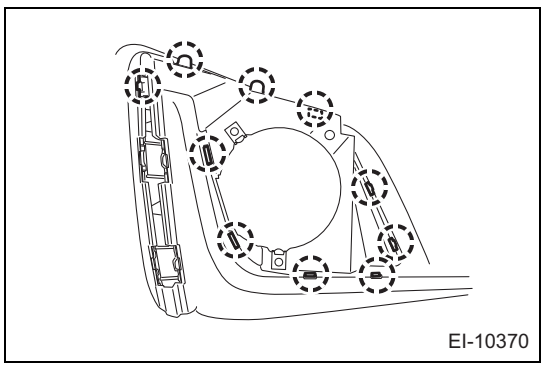

4. Installation of the fog light cover LH
   (1) Fit in the 10 claws and install the fog light cover LH.

5. Installation of the fog light cover RH
   NOTE:
   Install the part in the same manner as LH side.

6. Installation of the fog light ASSY LH (when there are fog lights) (Refer to LE - 55)
7. Installation of the fog light ASSY RH (when there are fog lights)
   NOTE:
   Install the part in the same manner as LH side.
8. Installation of windshield washer tank (Refer to WW - 30)

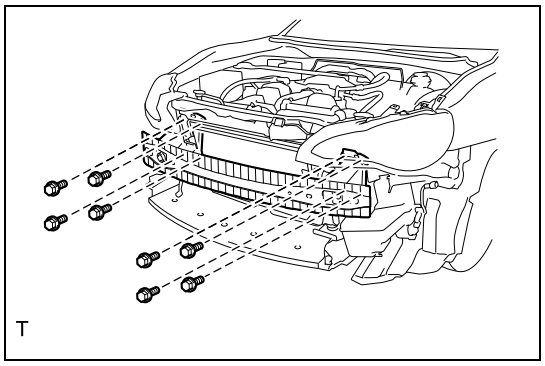

9. Installation of the front bumper beam COMPL
   (1) Using the 8 bolts, install the front bumper beam COMPL.
   Standard value:T=32N·m {326kgf·cm} {23.6 ft·lbf}

10. Installation of the high-pitched horn ASSY (Refer to HO - 6)

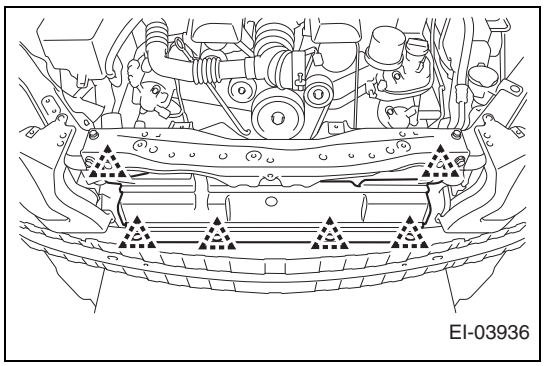

11. Installation of the radiator cover plate
   (1) Using 6 clips, install the radiator cover plate.

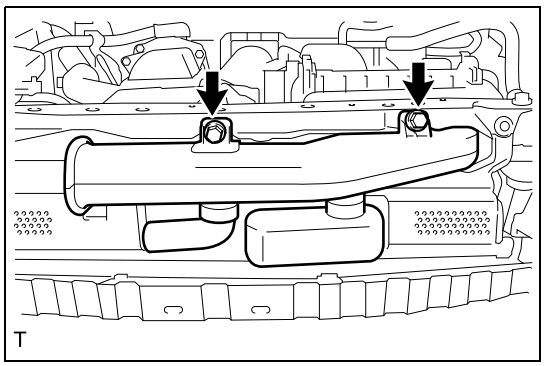

12. Installation of air cleaner duct
   (1) Using 2 bolts, install the air cleaner duct.
   Standard value:T=6.0N·m {61kgf·cm} {4.4ft·lbf}

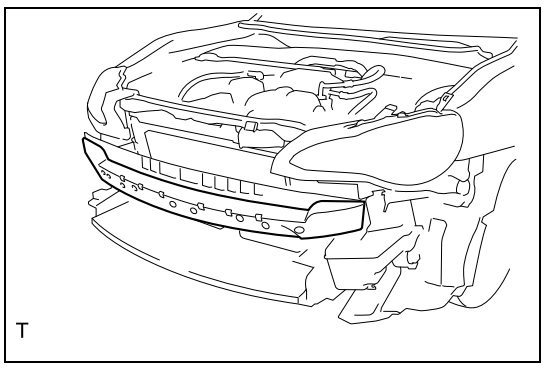

13. Installation of the front bumper energy absorber
   (1) Install the front bumper energy absorber.

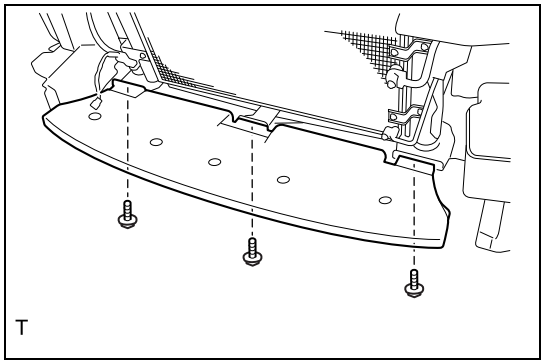

14. Installation of the front bumper stay bracket
    (1) Using the 3 bolts, install the front bumper stay bracket.
    Standard value:T=7.5N·m {77kgf·cm} {5.5ft·lbf}

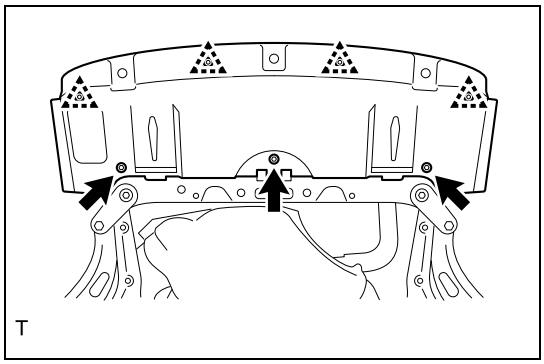

15. Installation of the front bumper cover LWR
    (1) Using 4 clips, install the front bumper cover LWR.
    (2) Install the 3 bolts.
    Standard value:T=7.5N·m {77kgf·cm} {5.5ft·lbf}

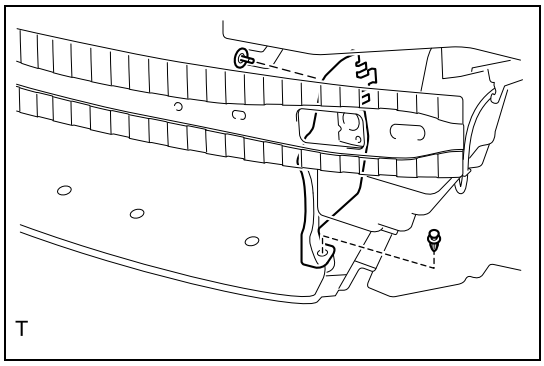

16. Installation of the front bumper beam plate LH
    (1) Using 2 clips, install the front bumper beam plate LH.

17. Installation of the front bumper beam plate RH
    NOTE:
    Install the part in the same manner as LH side.

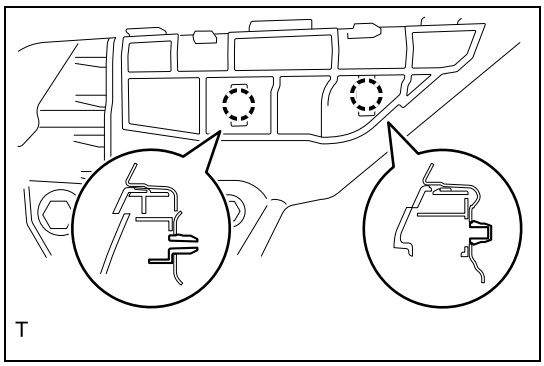

18. Installation of the front bumper side support LH
    (1) Fit in the 2 claws and install the front bumper side support LH.

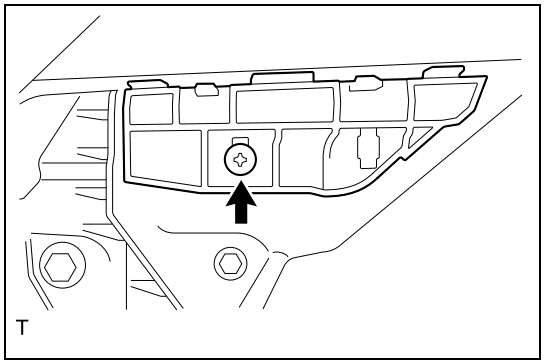

(2) Install the screw.

19. Installation of the front bumper side support RH
NOTE:
Install the part in the same manner as LH side.

Installation

1. Installation of the front bumper cover
(1) Connect each connector.

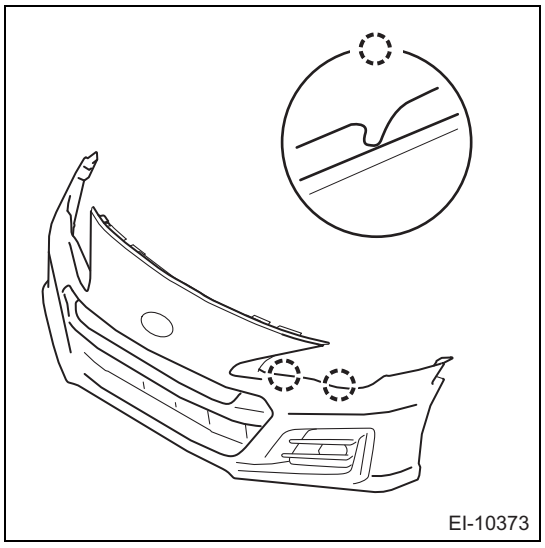

(2) Securely align the cutout portion exclusively provided for positioning on the front bumper side with the positioning rib on the front bumper front support side.

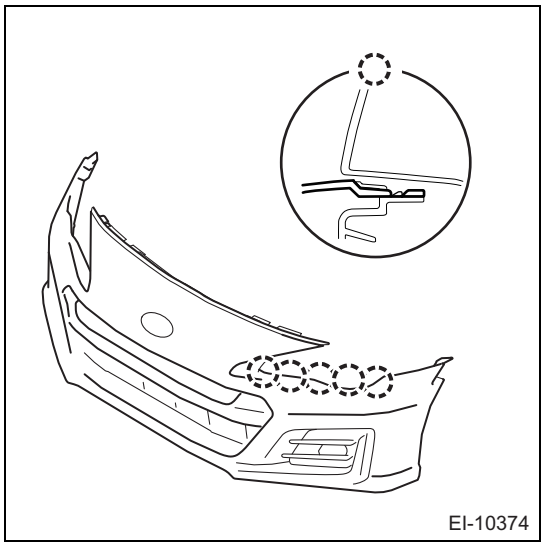

(3) Engage the 5 claws equipped under the headlight ASSY.

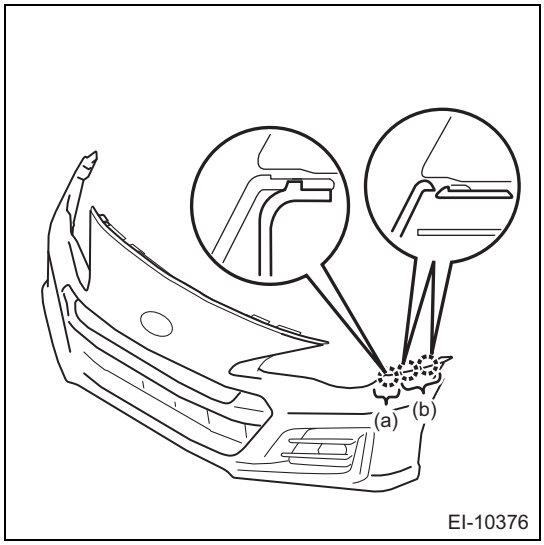

(4) Engage the 3 claws equipped under the fender.

(5) Check the engagement of the claws (a).
NOTE:
1. Pull the installation section of the side turn light to the outside to release the claw (b).
2. Pull out the bumper cover from the condition described above at a right angle to the surface by 20 to 30 mm (0.79 to 1.18 in).
3. When the claw (a) is securely engaged, go to Step (7). If the claw (a) is disengaged, return to Step (4) to perform the claw engagement again.

(6) Install the clip.
NOTE:
Perform same procedures for the RH side.

(7) Install the 4 clips.
NOTE:
Perform same procedures for the RH side.

(8) Install the 7 clips.

(9) Install the 2 bolts.
Standard value:T=7.5N·m {77kgf·cm} {5.5ft·lbf}

2. Installation of the front bumper retainer UPR
(1) Using the 5 bolts, install the front bumper retainer UPR.
Standard value:T=7.5N·m {77kgf·cm} {5.5ft·lbf}
(2) Install the 2 clips.
3. Installation of the front side marker light ASSY LH (Refer to LE - 59)
4. Installation of the front side marker light ASSY RH
NOTE:
Install the part in the same manner as LH side.
5. Preliminary operation for adjusting the fog light beams (when there are fog lights) (Refer to LE - 55)
6. Adjusting the fog light beams (when there are fog lights) (Refer to LE - 55)
7. Inspection of the fog light beams (when there are fog lights) (Refer to LE - 55)

Front under spoiler

Exploded view

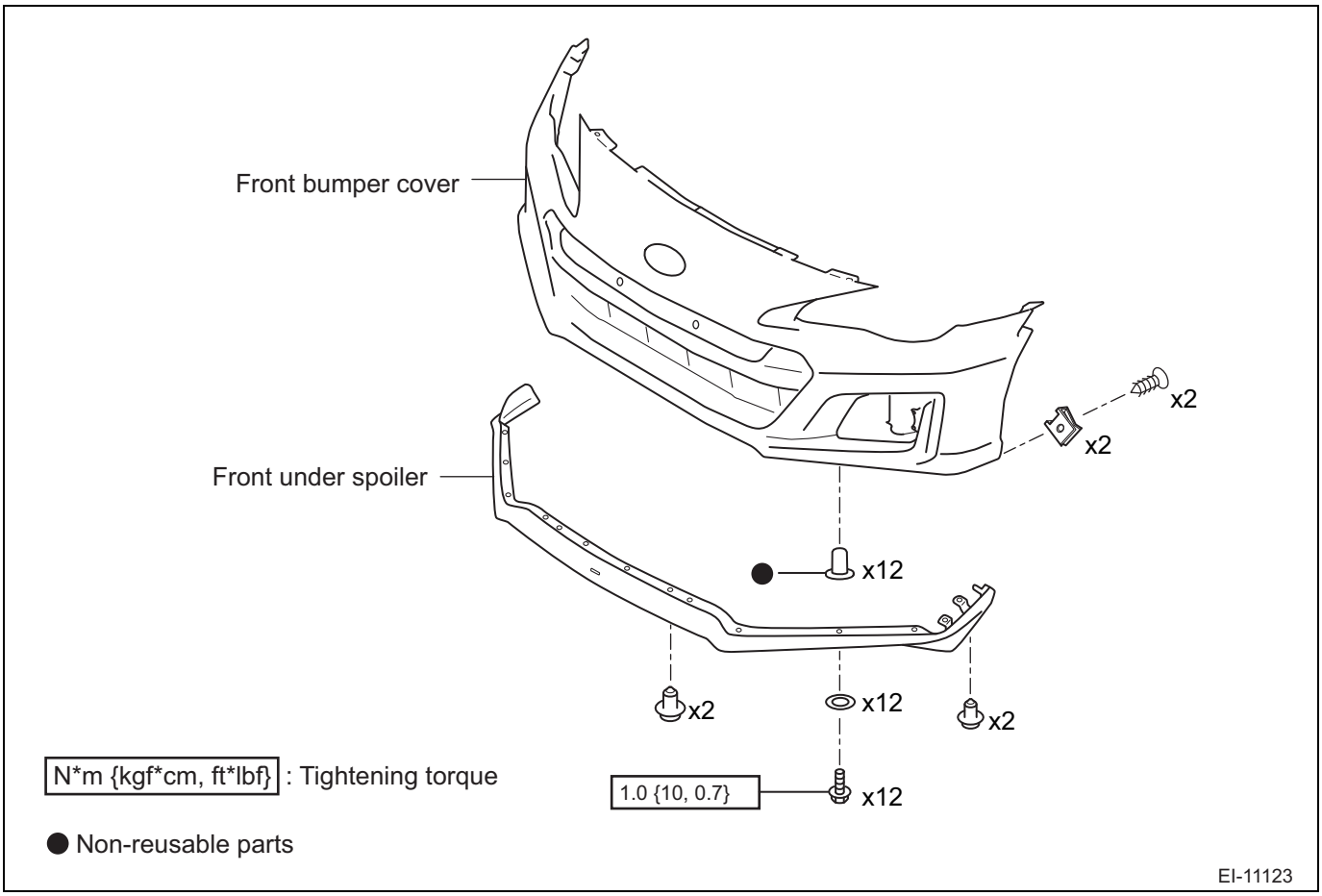

Removal

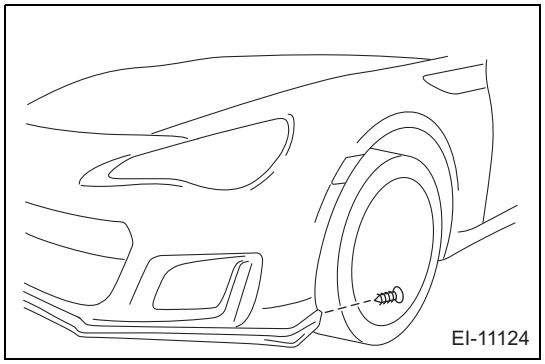

1. Removal of the front under spoiler
   (1) Remove the 1 screws.
   NOTE:
   Perform same procedures for the RH side.

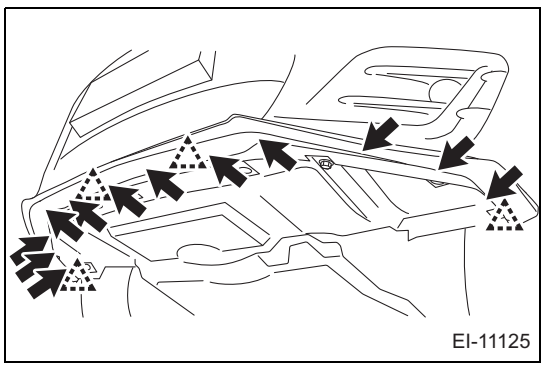

(2) Remove the 4 clips.
(3) Remove the 12 bolts.
(4) Remove the 12 well nuts.

ET

Installation

1. Installation of the front under spoiler
   (1) Install the 12 well nuts.
   (2) Install the 4 clips.
   (3) Install the 12 bolts.
   Standard value:T=1.0N·m {10kgf·cm} {0.7 ft·lbf}
   (4) Install the 1 screws.
   NOTE:
   Perform same procedures for the RH side.

Front bumper molding

Exploded view

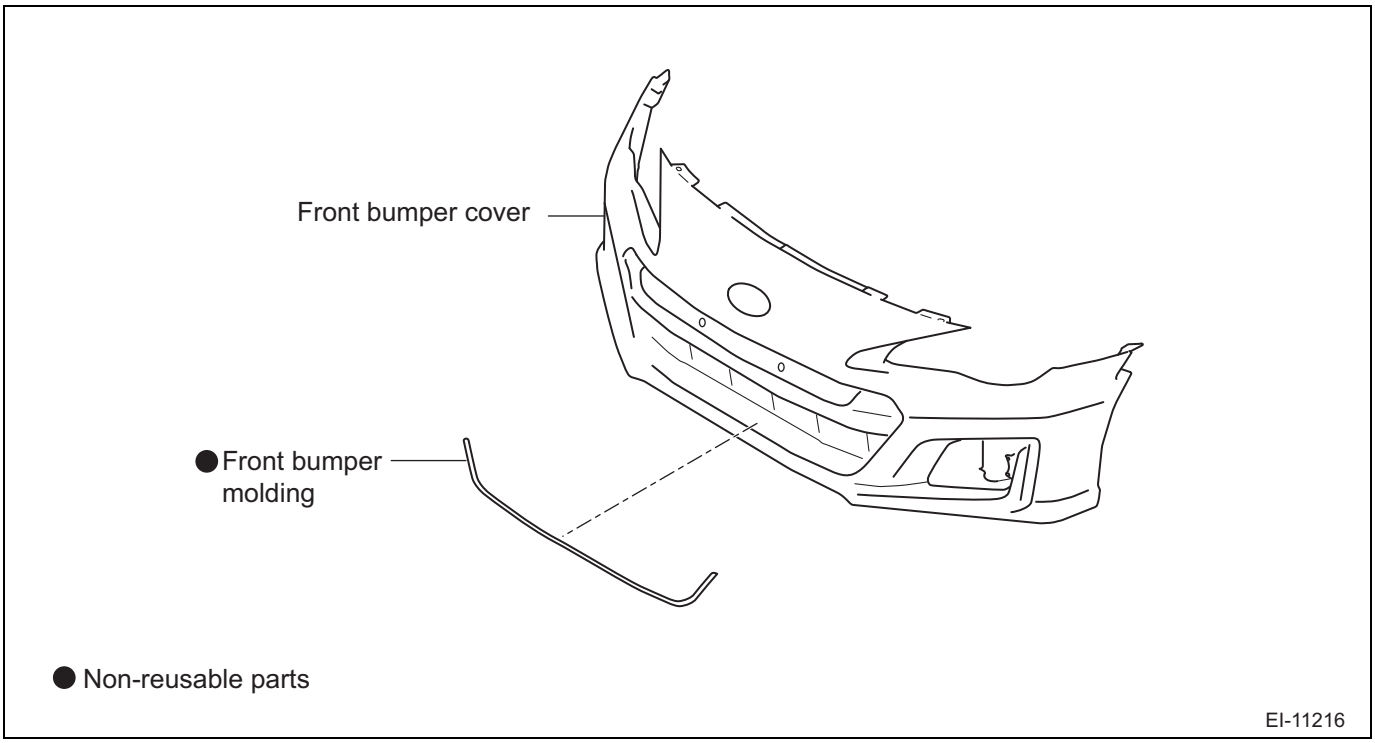

Replacement

1. Removal of the front bumper molding
2. Cleaning of the body installation surface
   (1) Degrease the installation surface with appropriate detergent.

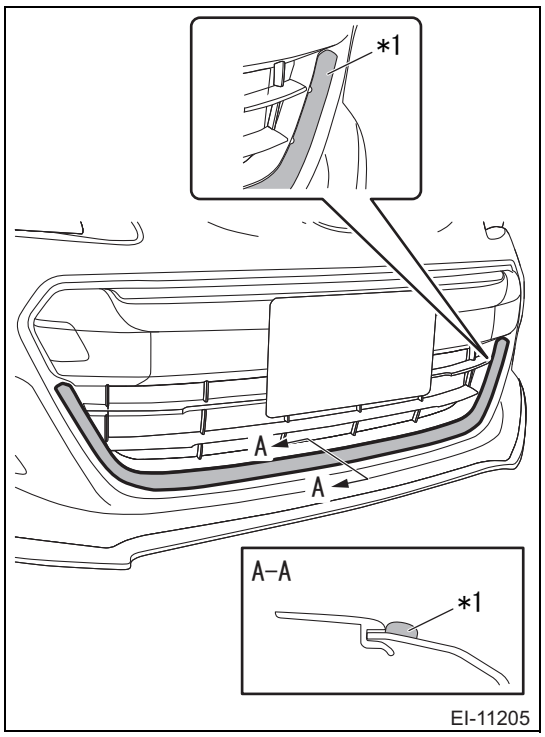

3. Installation of the front bumper molding
   (1) Position the recess on the front bumper molding by aligning it with the rib of the front bumper cover.
   (2) Temporarily install the front bumper molding by making sure there is no gap between it and the front bumper cover.

Captions in illustration

*1	Front bumper molding

ET

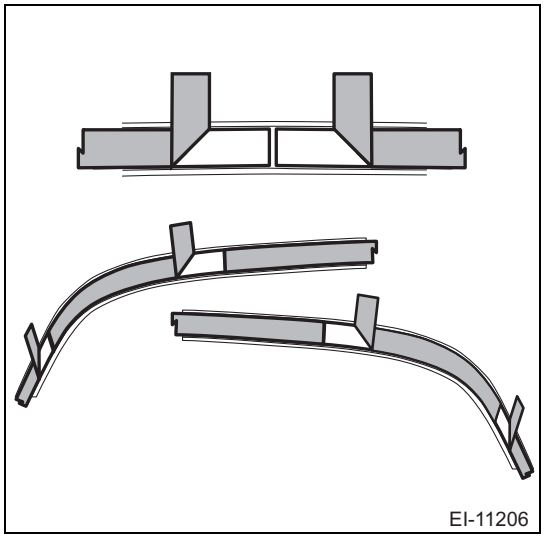
EI-11206

(3) Peel the backing sheet, and attach the element by pressing it down.
NOTE:
Do not peel the backing sheet off all at once, but rather peel it gradually while attaching the element.

Rear bumper

Exploded view

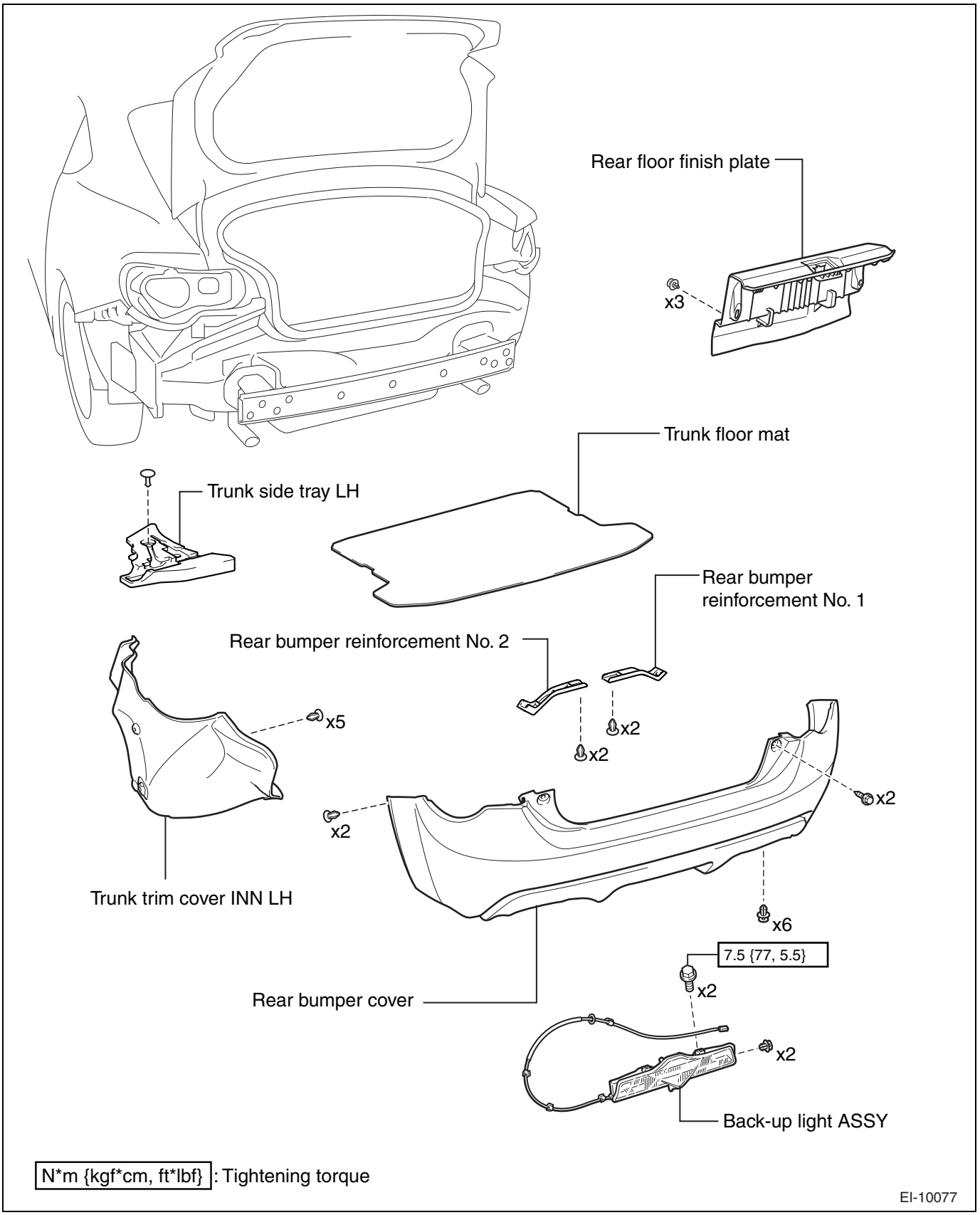

ET

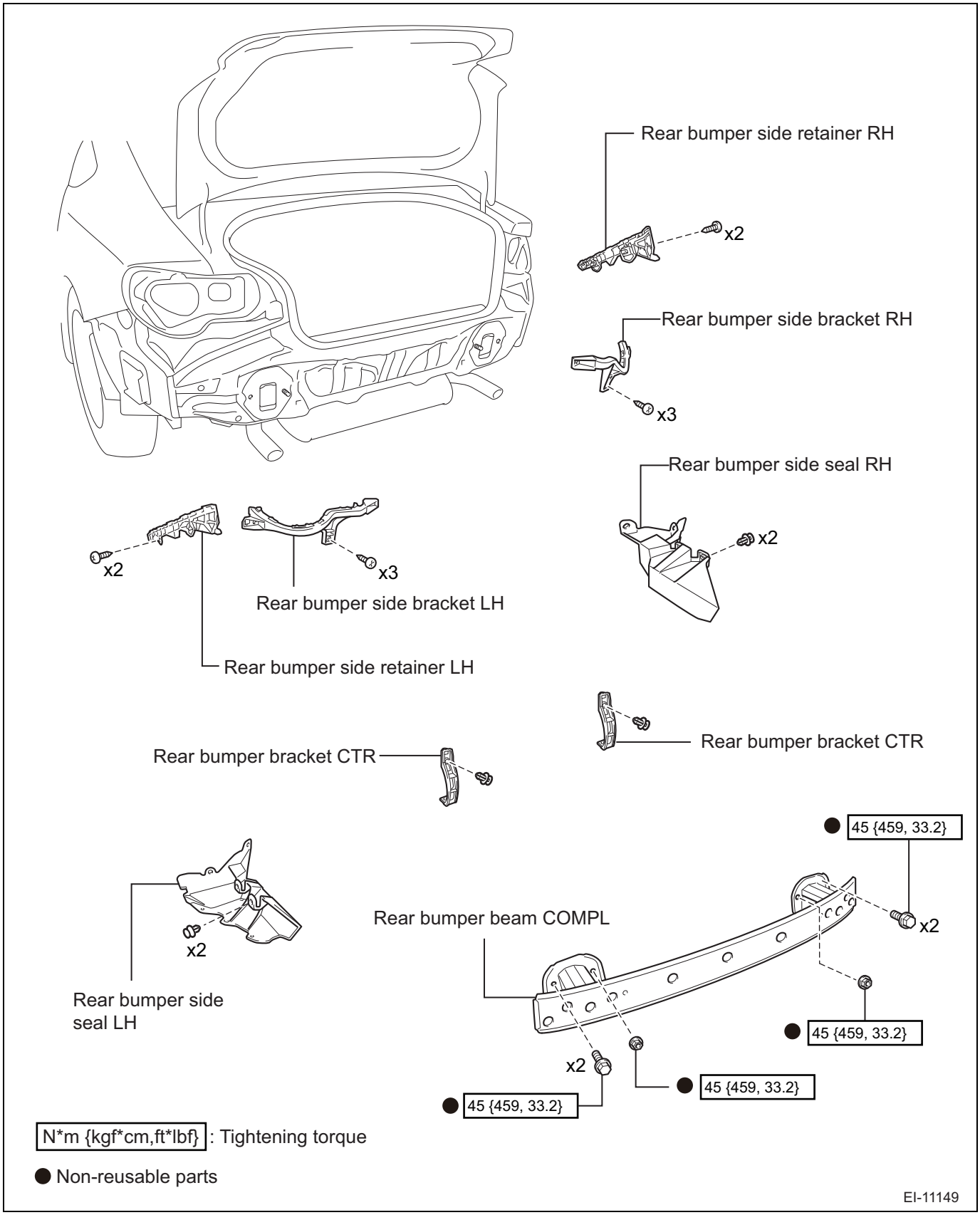

Removal

1. Removal of the trunk floor mat
2. Removal of the rear floor finish plate (Refer to LE - 61)

ET

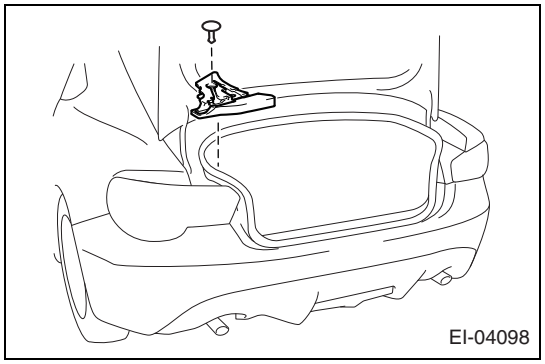

3. Removal of the trunk side tray LH
   (1) Using a clip remover, remove the clip.
   (2) Remove the trunk side tray LH.

4. Removal of the trunk trim cover INN LH (Refer to LE - 62)

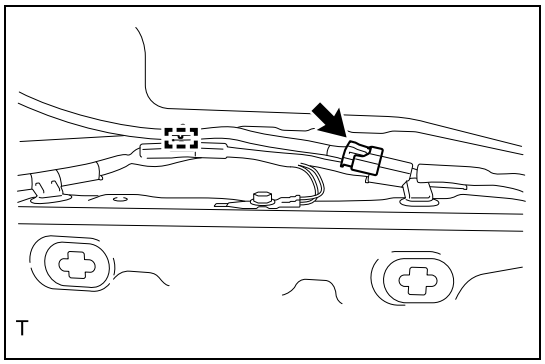

5. Removal of the rear bumper cover
   (1) Disconnect the connector of the back-up light ASSY.
   (2) Release the clamp, and disconnect the wiring harness.

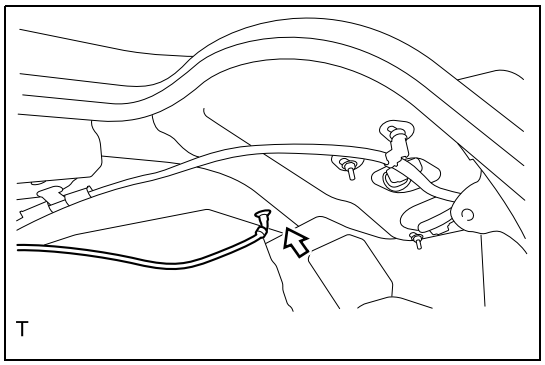

   (3) Disconnect the grommet, and pull the wiring harness out to the vehicle exterior.

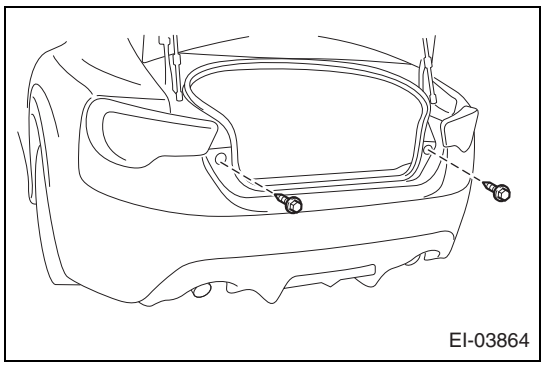

   (4) Remove the 2 screws.

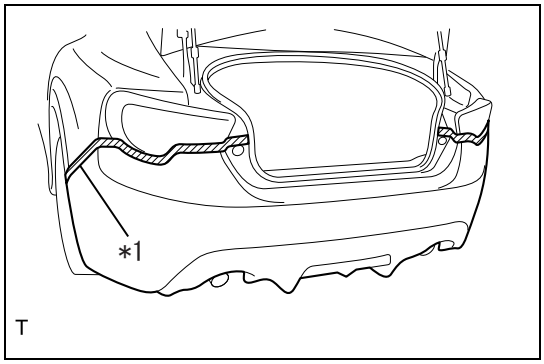

(5) Apply protective tape around the rear bumper cover.

Captions in illustration

*1	Protective tape

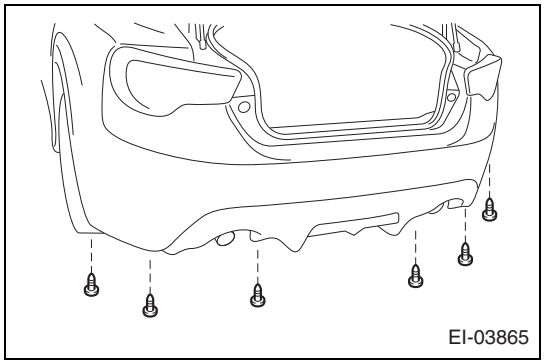

(6) Using a clip remover, remove the 6 clips.

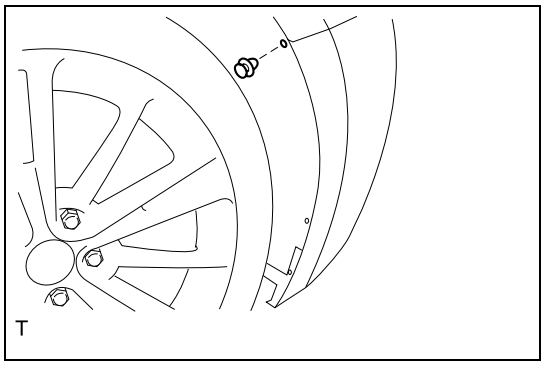

(7) Using a clip remover, remove the clip.
NOTE:
Perform same procedures for the RH side.

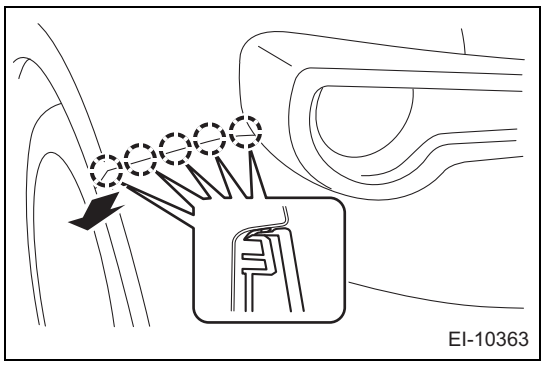

(8) Pull the rear bumper cover towards the exterior, and release the 5 claws.
NOTE:
Perform same procedures for the RH side.

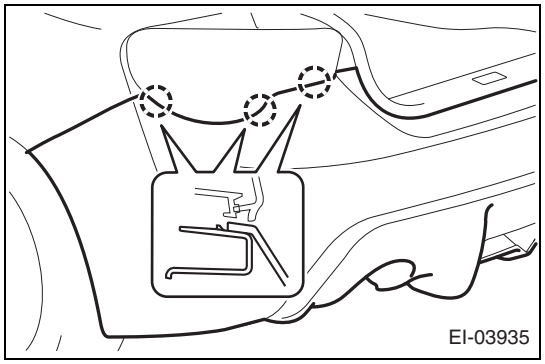

(9) Pull the rear bumper cover towards the rear, and release the 3 claws.
NOTE:
Perform same procedures for the RH side.

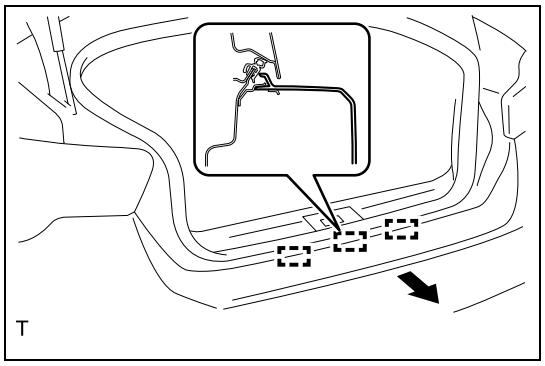

(10) Remove the 3 guides, and remove the rear bumper cover.

Disassembly

1. Removal of the back-up light ASSY (Refer to LE - 65)

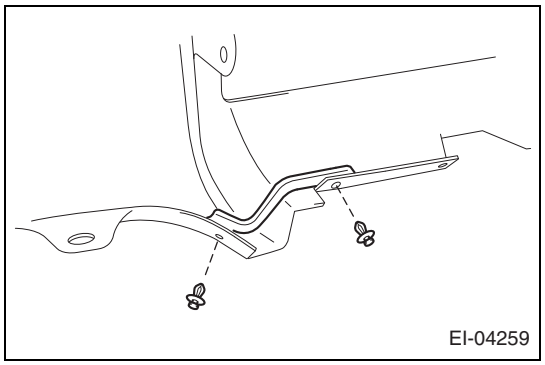

2. Removal of the rear bumper reinforcement NO. 2 (Installed on the LH side)
   (1) Using a clip remover, remove the 2 clips and remove the rear bumper reinforcement NO. 2.
3. Removal of the rear bumper reinforcement NO. 1 (Installed on the RH side)
   NOTE:
   Remove the part in the same manner as LH side.

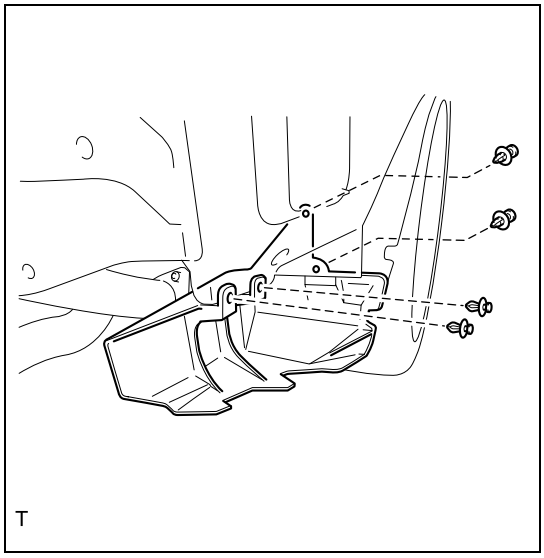
T

4. Removal of the rear bumper side seal LH
   (1) Using a clip remover, remove the 4 clips and remove the rear bumper side seal LH.

5. Removal of the rear bumper side seal RH
   NOTE:
   Remove the part in the same manner as LH side.

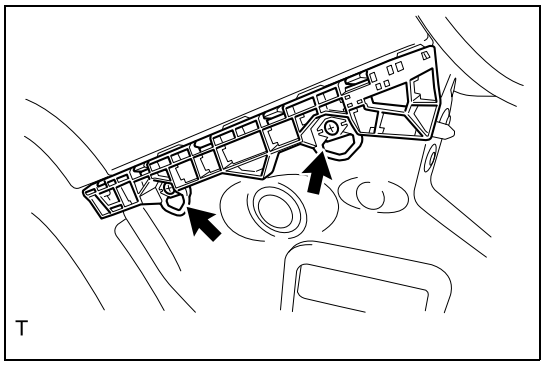
T

6. Removal of the rear bumper side retainer LH
   (1) Remove the 2 screws, and remove the rear bumper side retainer LH.

7. Removal of the rear bumper side retainer RH
   NOTE:
   Remove the part in the same manner as LH side.

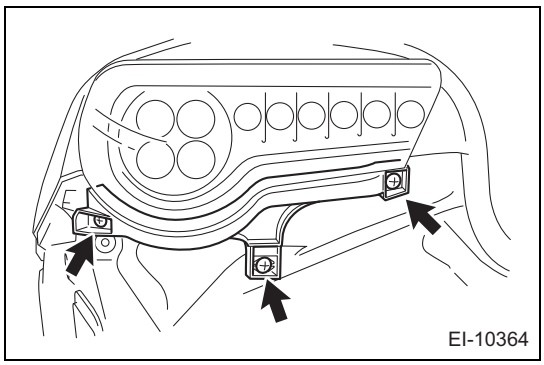
EI-10364

8. Removal of the rear bumper side bracket LH
   (1) Remove the 3 screws, and remove the rear bumper side bracket LH.

9. Removal of the rear bumper side bracket RH
   NOTE:
   Remove the part in the same manner as LH side.

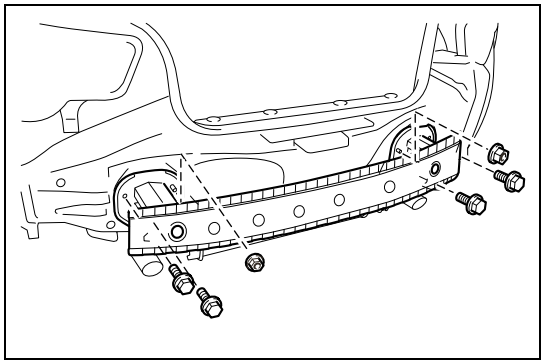

10. Removal of rear bumper beam COMPL
    (1) Remove the 4 bolts and the 2 nuts, and remove the rear bumper beam COMPL.

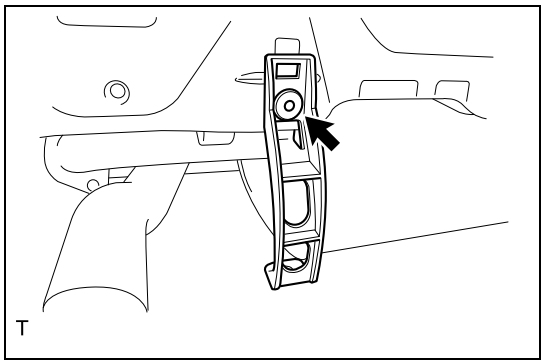

11. Removal of the rear bumper bracket CTR (Installed on the LH side)
    (1) Using a clip remover, remove the clip, and remove the rear bumper bracket CTR.

12. Removal of the rear bumper bracket CTR (Installed on the RH side)
    NOTE:
    Remove the part in the same manner as LH side.

Assembly

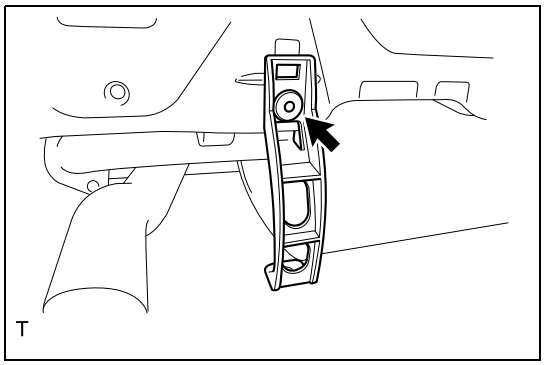

1. Installation of the rear bumper bracket CTR (Installed on the LH side)
    (1) Install the rear bumper bracket CTR.

2. Installation of the rear bumper bracket CTR (Installed on the RH side)
    NOTE:
    Install the part in the same manner as LH side.

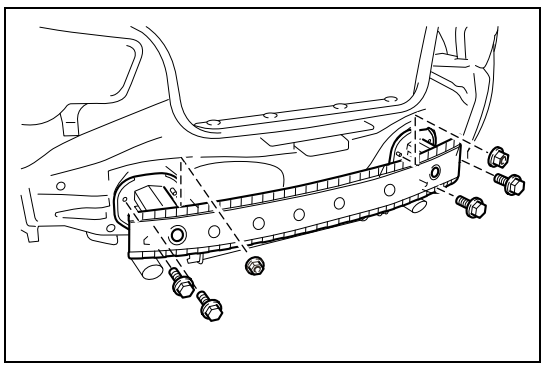

3. Installation of the rear bumper beam COMPL
    (1) Using the 4 bolts and the 2 nuts, install the rear bumper beam COMPL.
    Standard value:T=45N·m {459kgf·cm} {33.2ft·lbf}

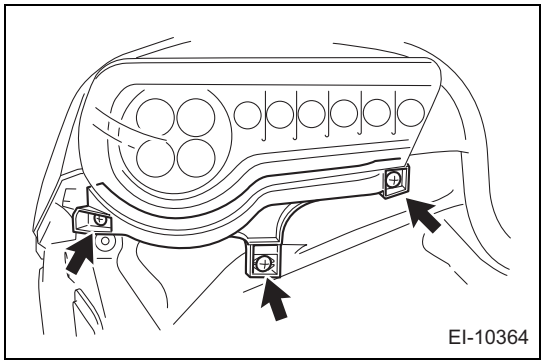

4. Installation of the rear bumper side bracket LH
   (1) Using 3 screws, install the rear bumper side bracket LH.

5. Installation of the rear bumper side bracket RH
   NOTE:
   Install the part in the same manner as LH side.

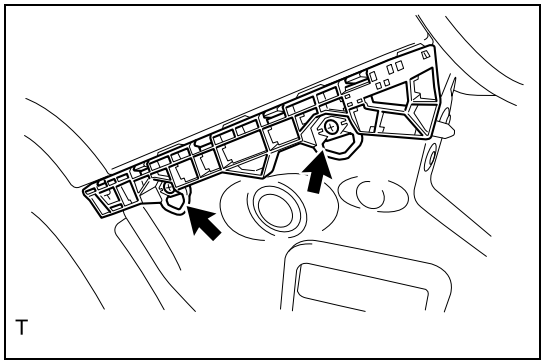

6. Installation of the rear bumper side retainer LH
   (1) Using 2 screws, install the rear bumper side retainer LH.

7. Installation of the rear bumper side retainer RH
   NOTE:
   Install the part in the same manner as LH side.

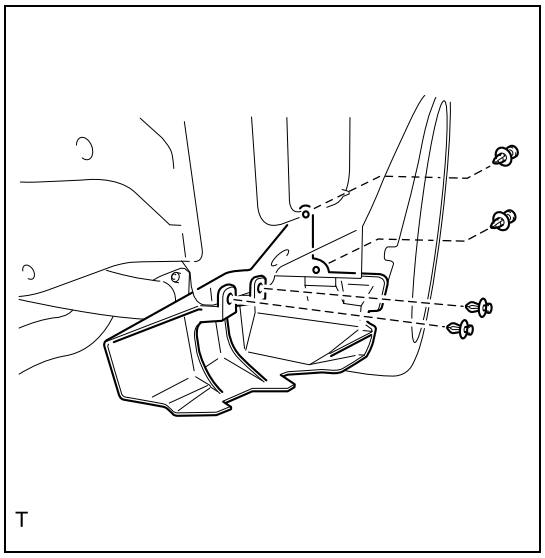

8. Installation of the rear bumper side seal LH
   (1) Using 4 clips, install the rear bumper side seal LH.

9. Installation of the rear bumper side seal RH
   NOTE:
   Install the part in the same manner as LH side.

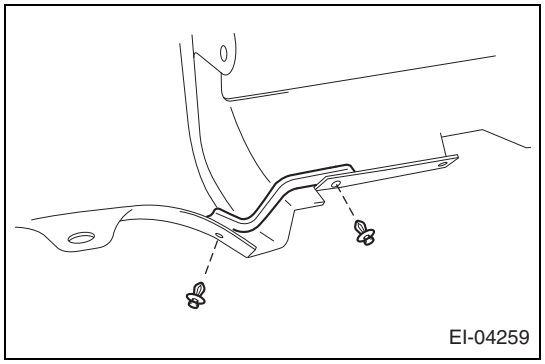

10. Installation of the rear bumper reinforcement NO. 2 (Installed on the LH side)
    (1) Using 2 clips, install the rear bumper reinforcement NO. 2.
11. Installation of the rear bumper reinforcement NO. 1 (Installed on the RH side)
    NOTE:
    Install the part in the same manner as LH side.
12. Installation of the back-up light ASSY (Refer to LE - 67)

Installation

1. Installation of the rear bumper cover
    (1) Preparations for installation
        (a)Pull the wiring harness of the back-up light ASSY in to the interior.

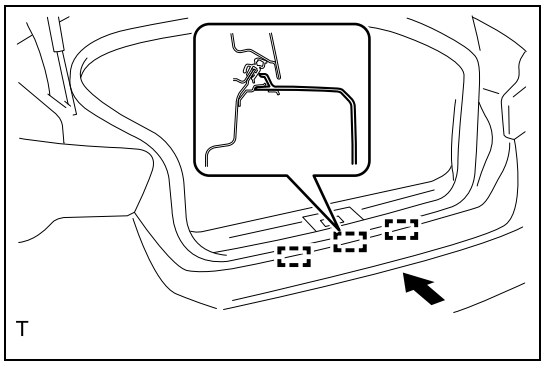

(2) In the direction of the arrow in the figure, insert the 3 guides.

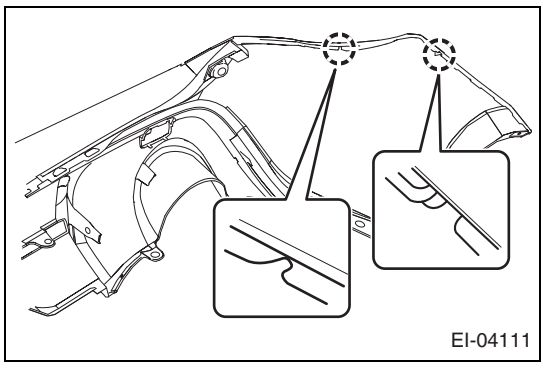

(3) Securely align two cutout portions on the rear bumper.
- The positioning rib on the rear bumper side bracket
- The positioning rib on the rear bumper side retainer

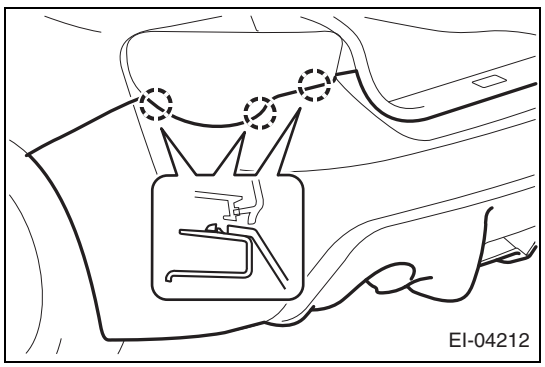

(4) Fit in the 3 claws.
NOTE:
Perform same procedures for the RH side.

ET

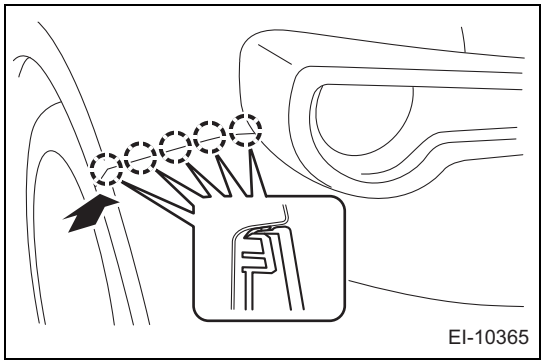

(5) Fit in the 5 claws.
NOTE:
Perform same procedures for the RH side.

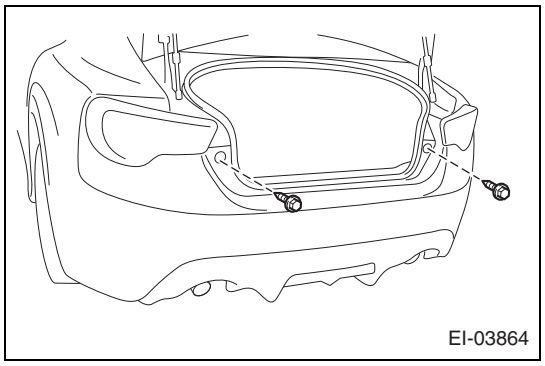

(6) Install the 2 screws.

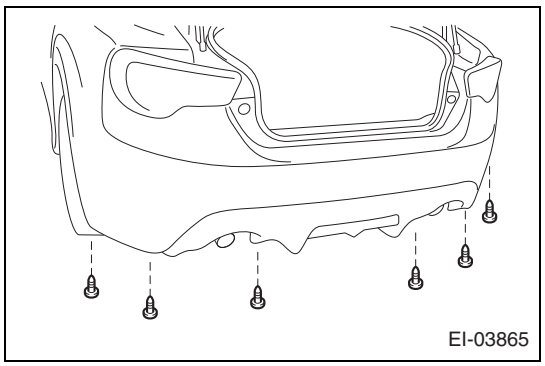

(7) Using 8 clips, install the rear bumper cover.

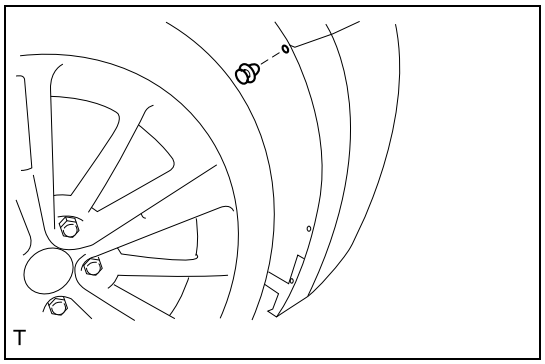

(8) Connect the connector.
(9) Using a clamp, install the wiring harness of the back-up light ASSY.

2. Installation of the trunk trim cover INN LH (Refer to LE - 63)
3. Installation of the trunk side tray LH
4. Installation of the rear floor finish plate (Refer to LE - 63)
5. Installation of the trunk floor mat

Rear under spoiler

Exploded view

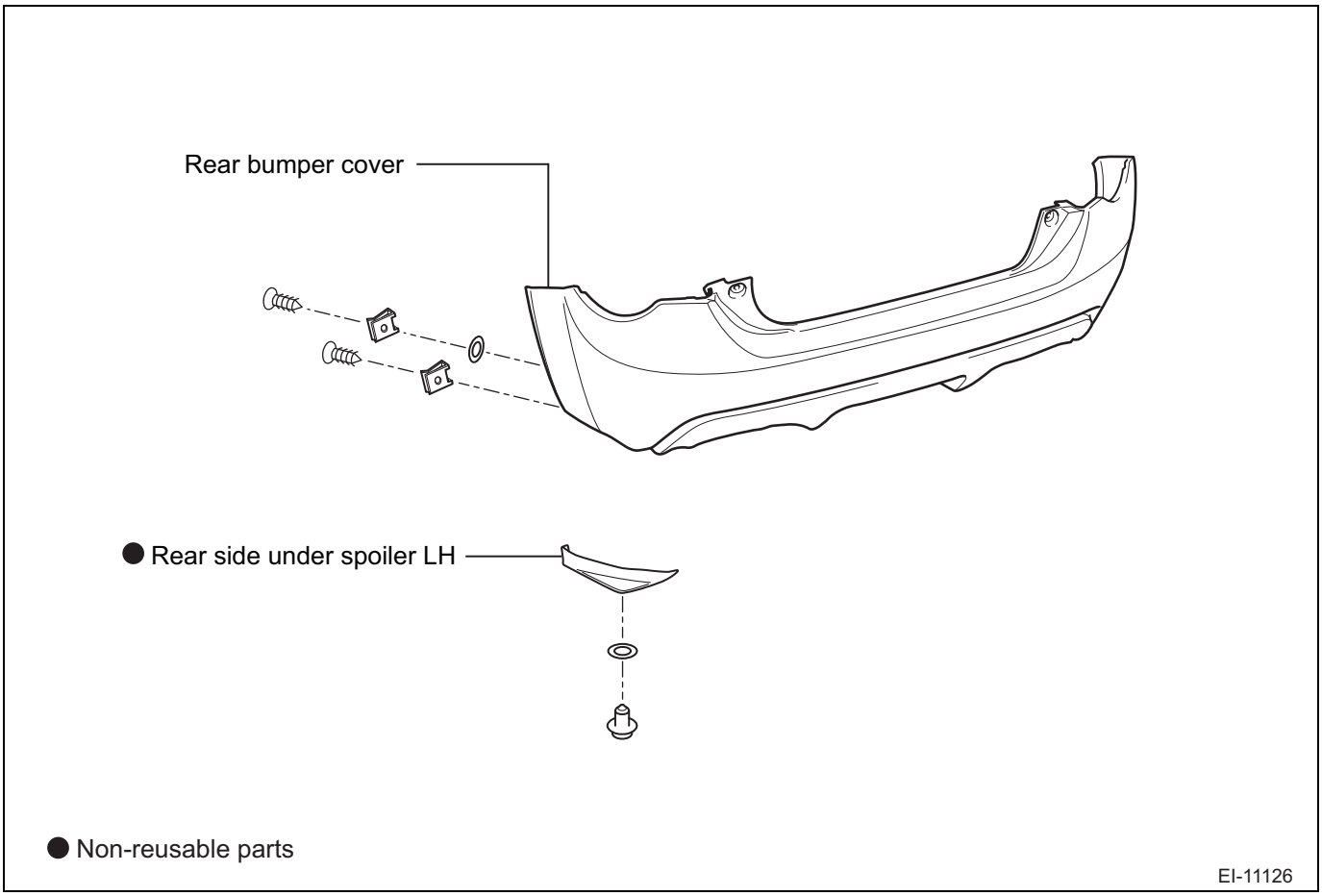

Removal

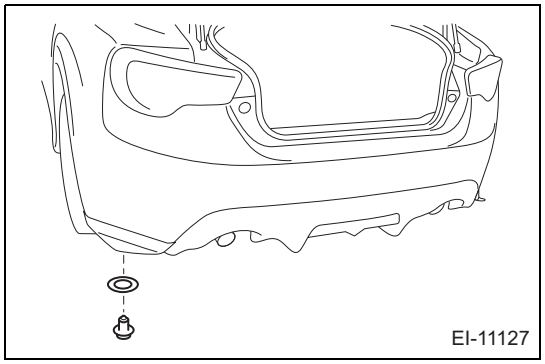

1. Removal of the rear under spoiler LH
   (1) Remove the 1 clip and washer.

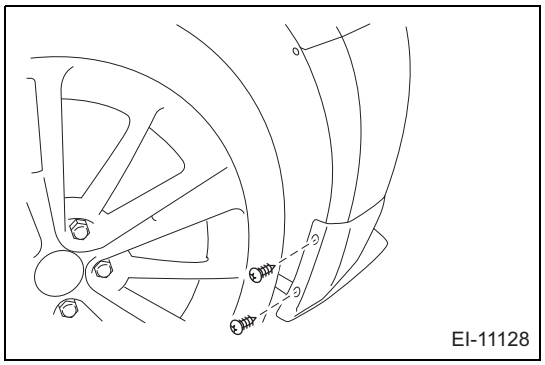

(2) Remove the 2 screws.

2. Removal of the rear under spoiler RH
   NOTE:
   Remove the part in the same manner as LH side.

Installation

1. Cleaning of the body installation surface
   (1) Using a cloth, rub off any double-sided tape remaining on the body.
   CAUTION:
   If you install the rear under spoiler with double-sided tape remaining, it can cause poor adhesion, so be sure to fully remove it.
   (2) Clean the adhesive surface.
2. Installation of the rear under spoiler LH
   (1) Peel the backing sheet of the double-sided tape, and install the rear under spoiler LH.
   (2) Install the 2 screws.
   (3) Install the 1 clip and washer.
3. Installation of the rear under spoiler RH
   NOTE:
   Install the part in the same manner as LH side.

Rear bumper stripe

Exploded view

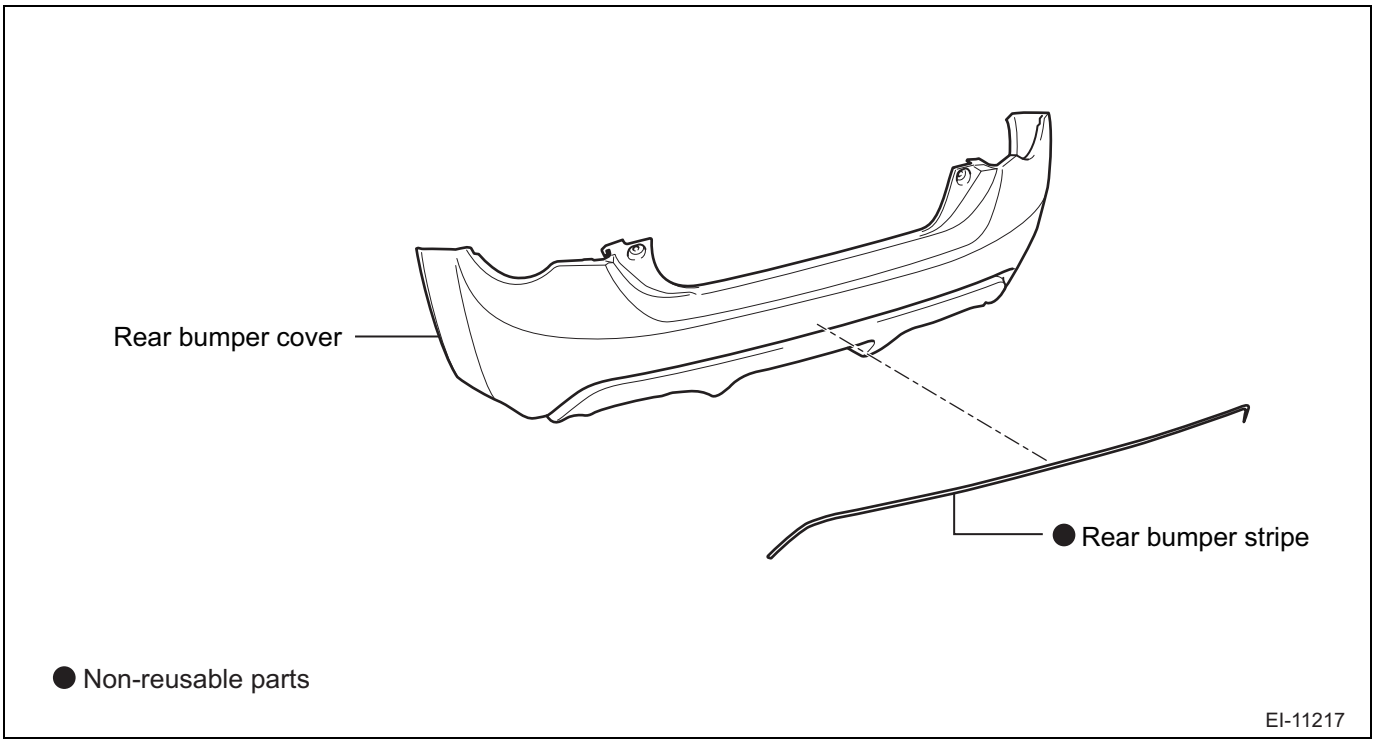

Replacement

1. Removal of the rear bumper stripe
2. Cleaning of the body installation surface
   (1) Degrease the installation surface with appropriate detergent.
3. Installation of the rear bumper stripe

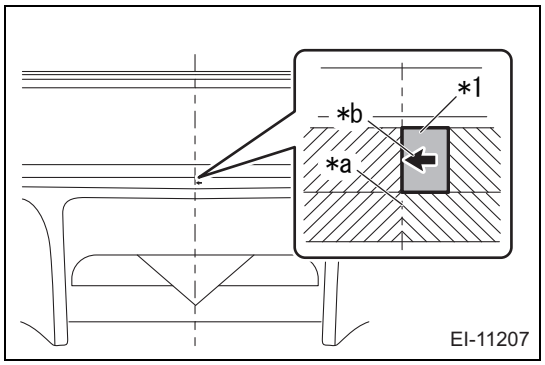

(1) Mark the center of the rear bumper cover.

Captions in illustration

*1	Masking tape
*a	Rear bumper cover center
*b	Marking

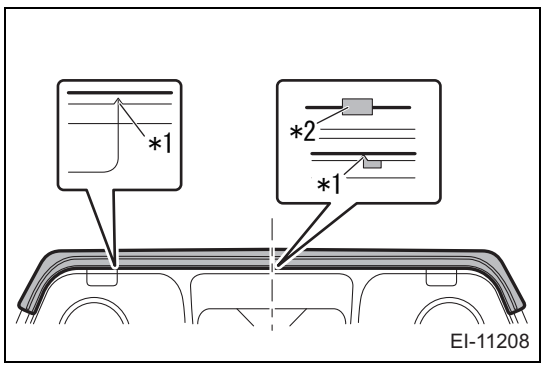

(2) Position the rear bumper stripe by aligning its cutout.

Captions in illustration

*1	Stripe tape cutout
*2	Masking tape

ET

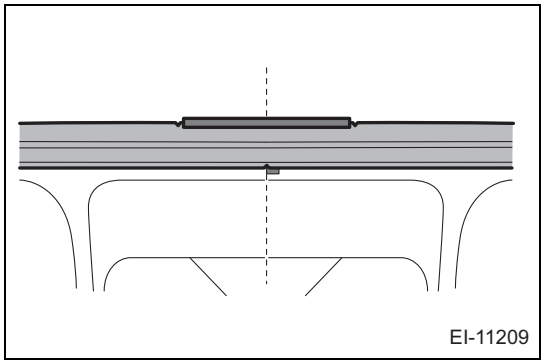
EI-11209

(3) Temporarily secure the rear bumper stripe.

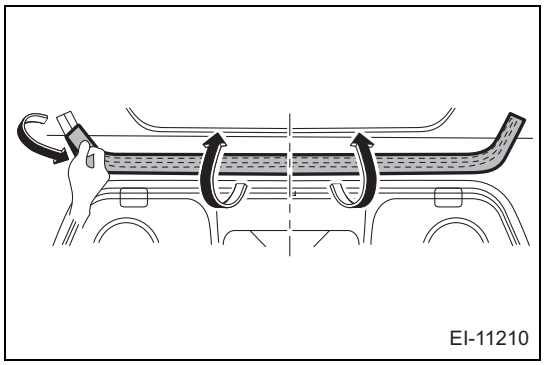
EI-11210

(4) Fold the rear bumper stripe, and peel the backing sheet.
CAUTION:
Be careful not to touch the adhesive surface.

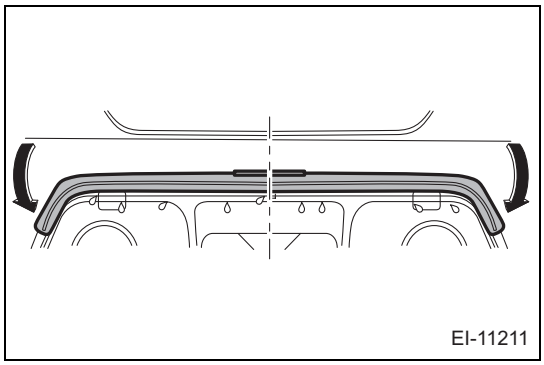
EI-11211

(5) Spray the rear bumper cover with water, and install the rear bumper stripe.

(6) Use a squeegee or a similar tool to press the stripe against the surface starting from the center of the vehicle, and be sure not to leave any water or foam.

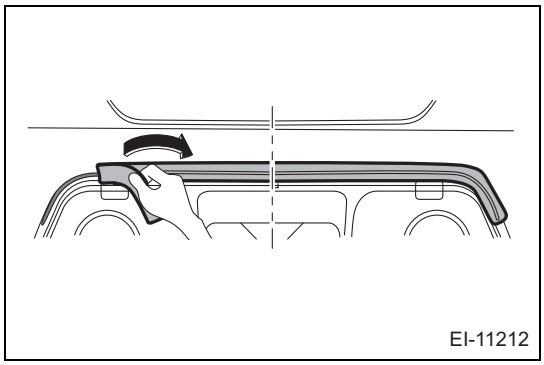
EI-11212

(7) Remove the application part, and check if the rear bumper stripe is properly attached.
CAUTION:
- If you cannot peel the rear bumper stripe from the application side, press it against the surface again.
- If there is any foam left, use a needle or a similar object to make a hole, and push the foam out.

Rear spoiler

Exploded view

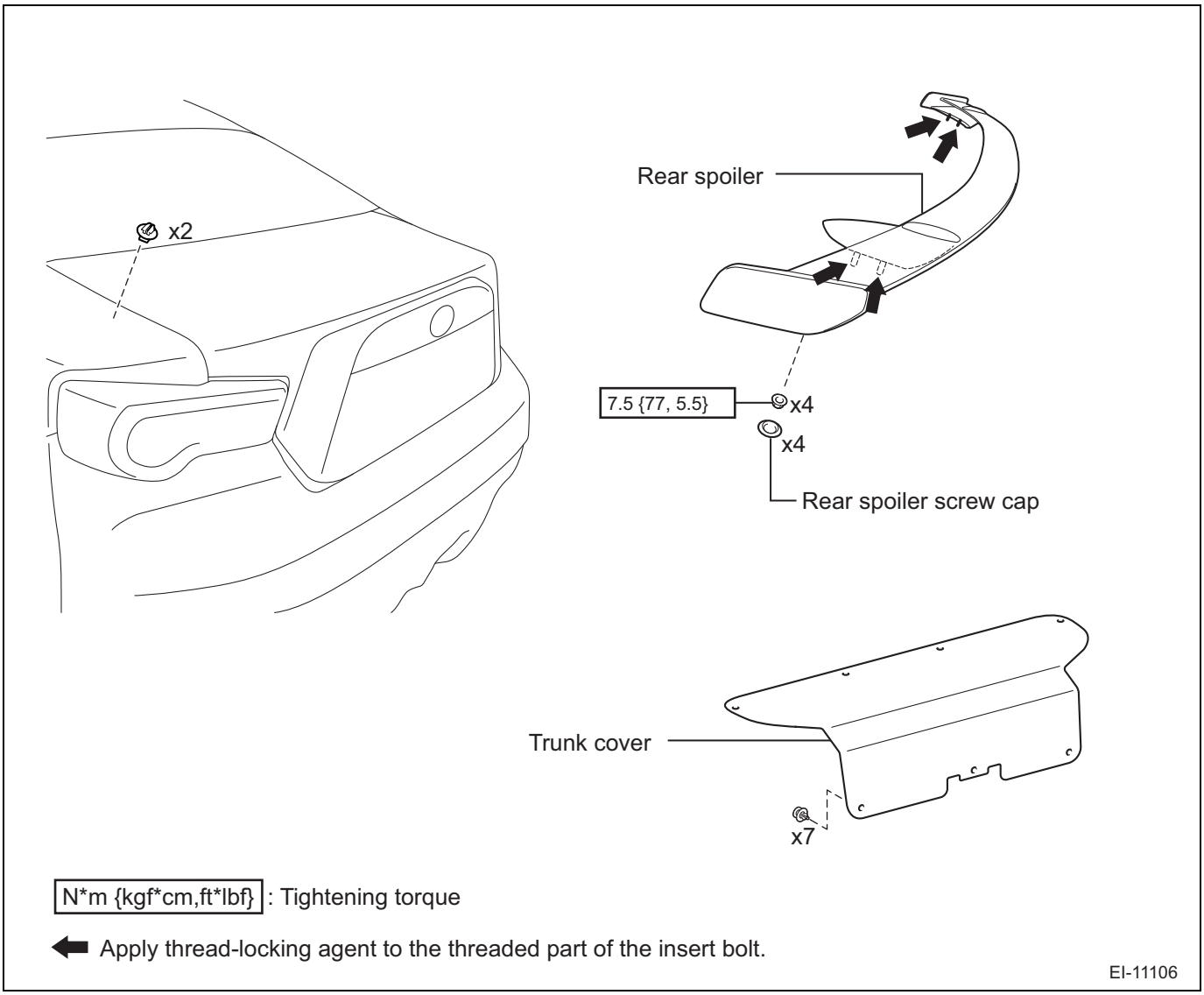

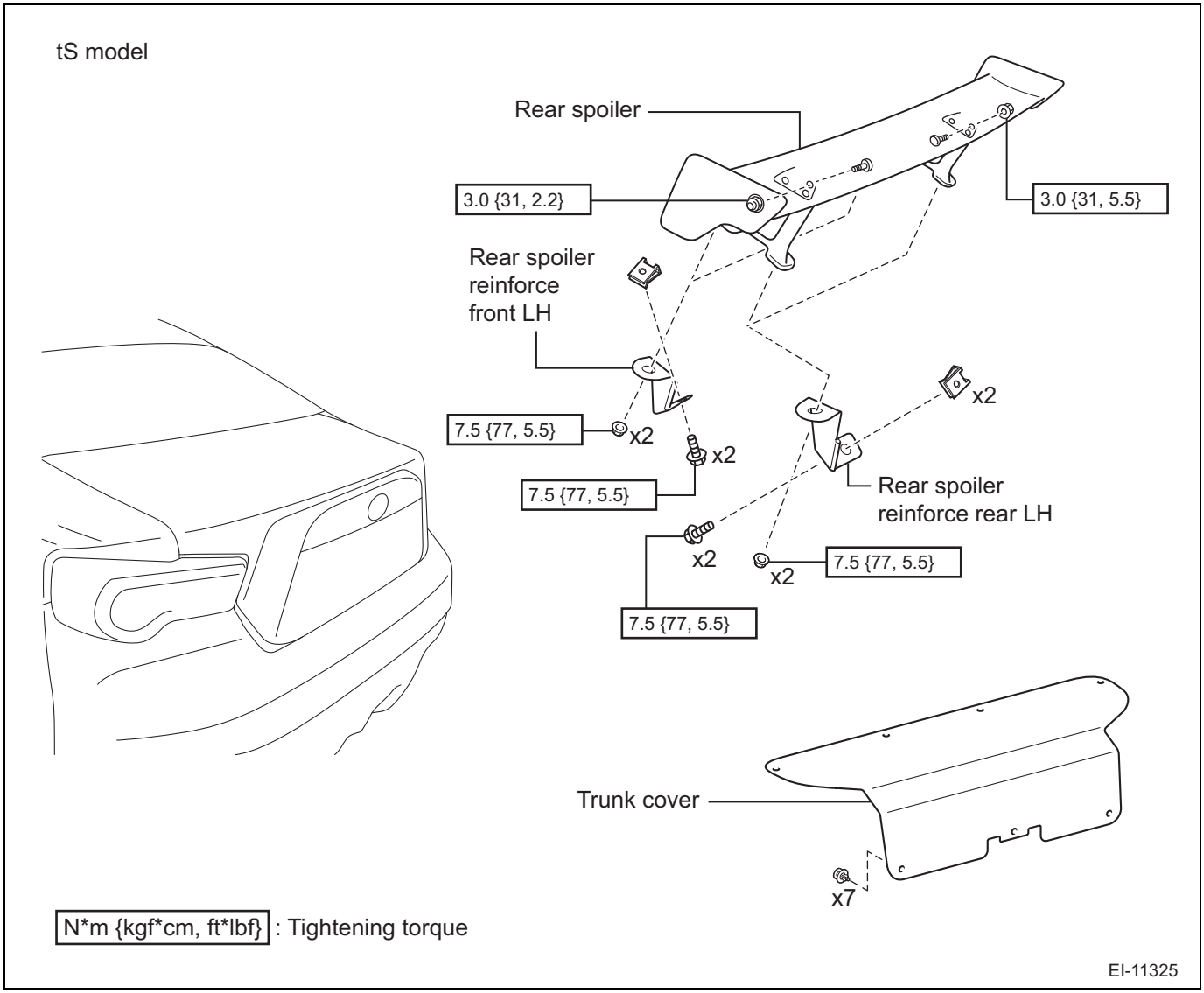

CAUTION:
During angle adjustment, do not loosen the bolt and nut on the front side of angle adjustment type rear spoiler. The angle adjustment can be made by removing the bolt and nut on the back side.

Removal

1. Removal of trunk cover (Refer to DH - 61)

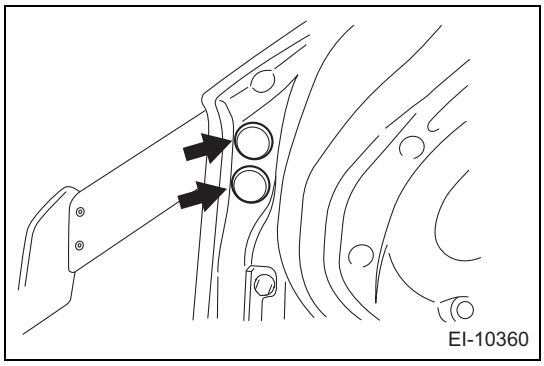

2. Removal of the rear spoiler screw caps (Installed on the LH side)
   (1) Remove the 2 rear spoiler screw caps.
   NOTE:
   Perform same procedures for the RH side.
3. Removal of the rear spoiler
   (1) Remove the 4 nuts.

ET

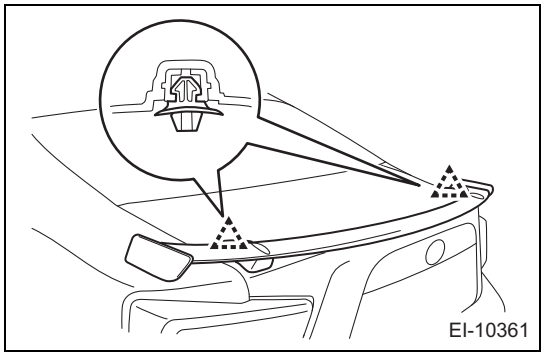

(2) Release the 2 clips, and remove the rear spoiler.
CAUTION:
Hold the rear spoiler to prevent it from falling.

Removal (tS model)

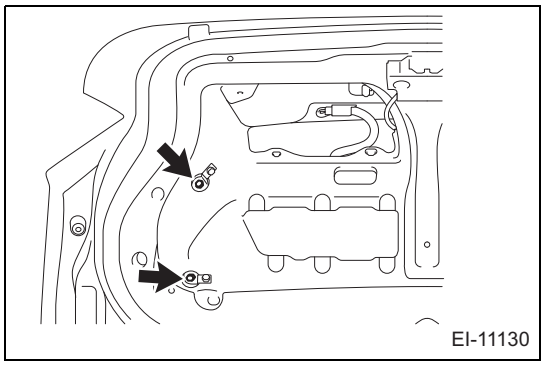

1. Removal of the rear spoiler
(1) Remove the 4 nuts.

Installation

1. Installation of the rear spoiler
CAUTION:
- If the clips are damaged, or if the gasket is worn out, replace them with new clips.
- Hold the rear spoiler ASSY rear spoiler to prevent it from falling.

(1) Clean the threaded part of the insert bolt on the rear spoiler.

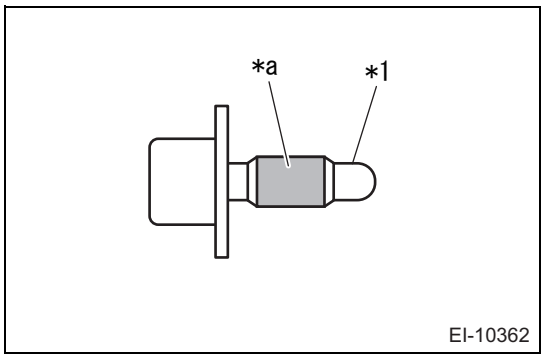

(2) Apply thread-locking agent to the threaded part of the insert bolt.

Captions in illustration

*1	Insert bolt
*a	Adhesive 1324 item No. V93500114 or equivalent for thread-locking agent

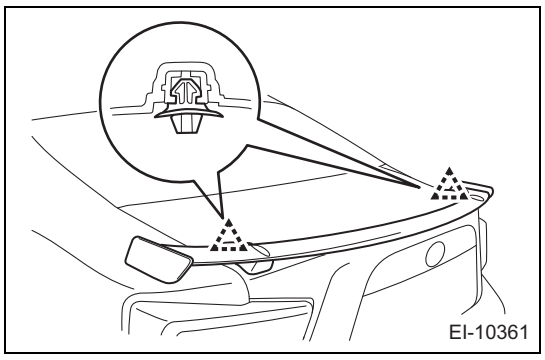

(3) Install 2 clips on the trunk panel.

(4) Fit in the 2 clips.

(5) Using 4 nuts, install the rear spoiler.

Standard value:T=7.5N·m {77kgf·cm} {5.5 ft·lbf}

2. Installation of the rear spoiler screw caps (Installed on the LH side)
   (1) Install the 2 rear spoiler screw caps.
   NOTE:
   Perform same procedures for the RH side.
3. Installation of trunk cover (Refer to DH - 62)

Installation (tS model)

1. Installation of the rear spoiler
   (1) Using 4 nuts, install the rear spoiler.
   Standard value:T=7.5N·m {77kgf·cm} {5.5 ft·lbf}

Side under spoiler

Exploded view

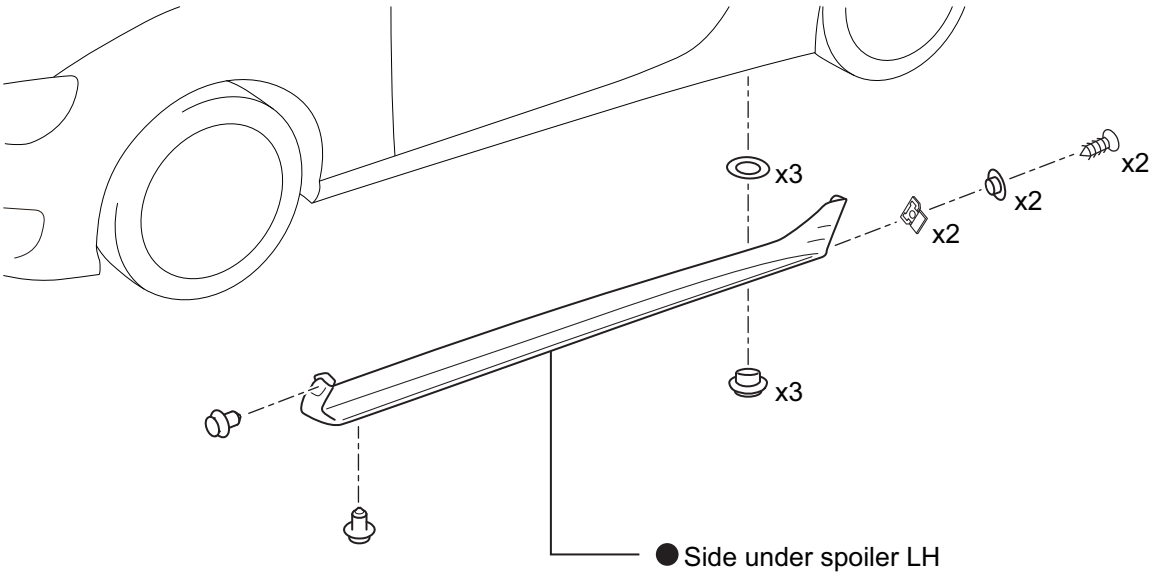

● Non-reusable parts

EI-11131

Removal

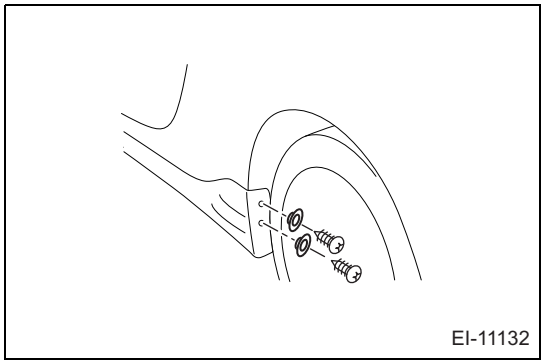

EI-11132

1. Removal of the side under spoiler LH
   (1) Remove the 2 screws and spacers.

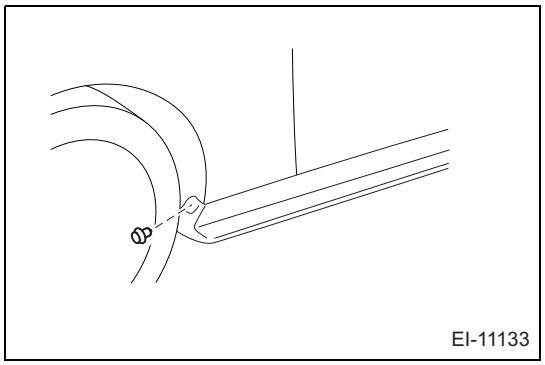

EI-11133

(2) Remove the 1 clips.

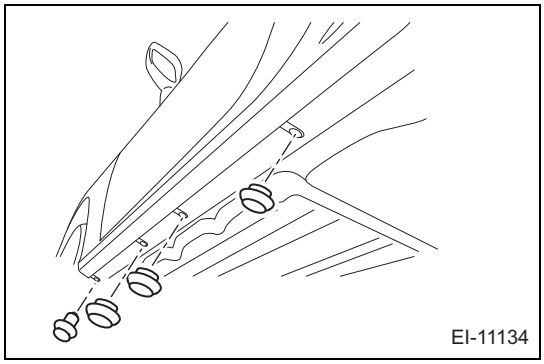

(3) Remove the 1 clip and 3 grommets.

2. Removal of the side under spoiler RH
   NOTE:
   Remove the part in the same manner as LH side.

Installation

1. Cleaning of the body installation surface
   (1) Using a cloth, rub off any double-sided tape remaining on the body.
   CAUTION:
   If you install the side under spoiler with double-sided tape remaining, it can cause poor adhesion, so be sure to fully remove it.
   (2) Clean the adhesive surface.
2. Installation of the side under spoiler LH
   (1) Peel the backing sheet of the double-sided tape, and install the side under spoiler LH.
   CAUTION:
   Do not forget to install the spacers.
   (2) Install the 1 clip and 3 grommets.
   (3) Install the 1 clips.
   (4) Install the 2 screws and spacers.
3. Installation of the side under spoiler RH
   NOTE:
   Install the part in the same manner as LH side.

Name plate

Exploded view

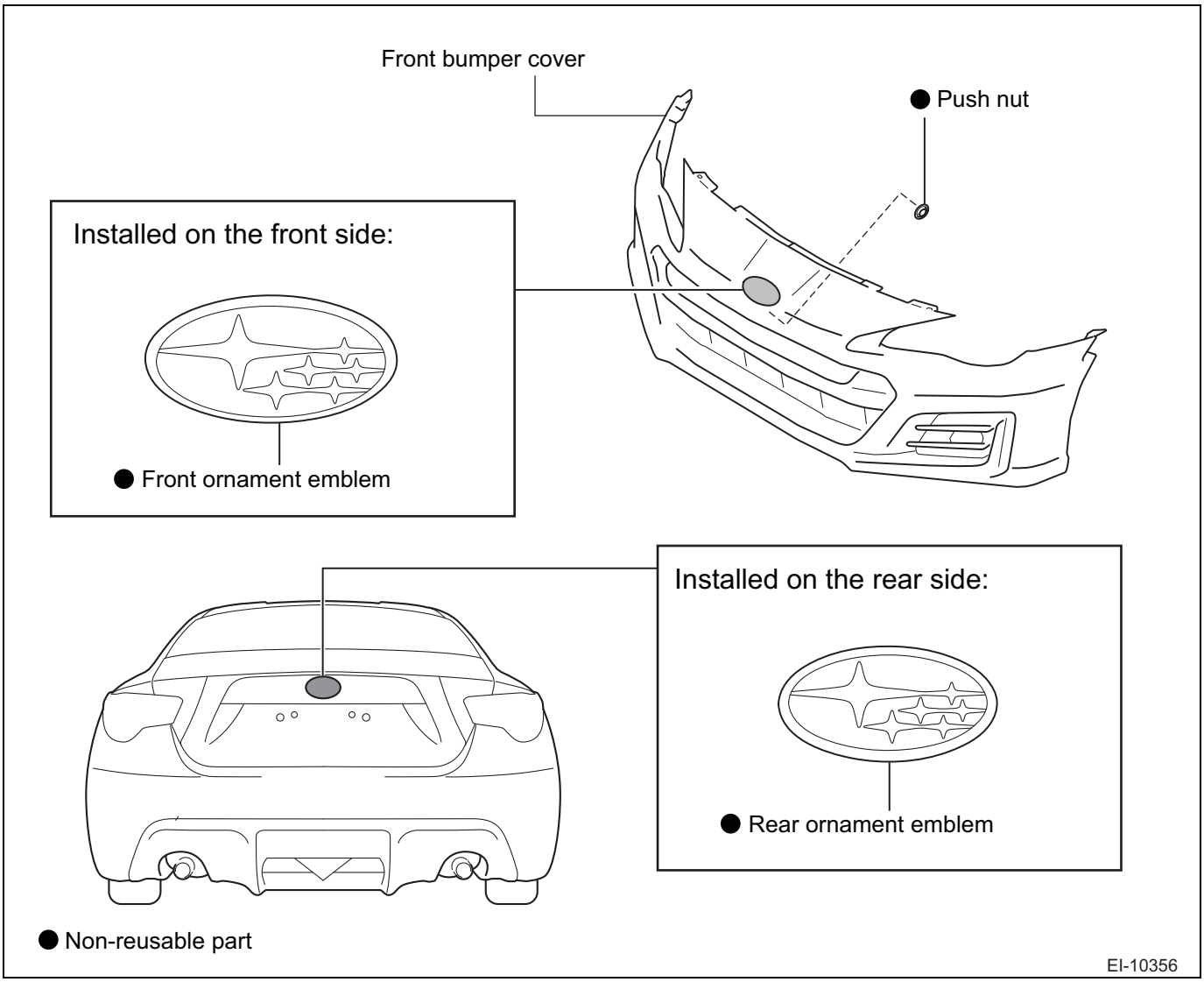

Removal

1. Removal of the front bumper cover (Refer to ET - 4)

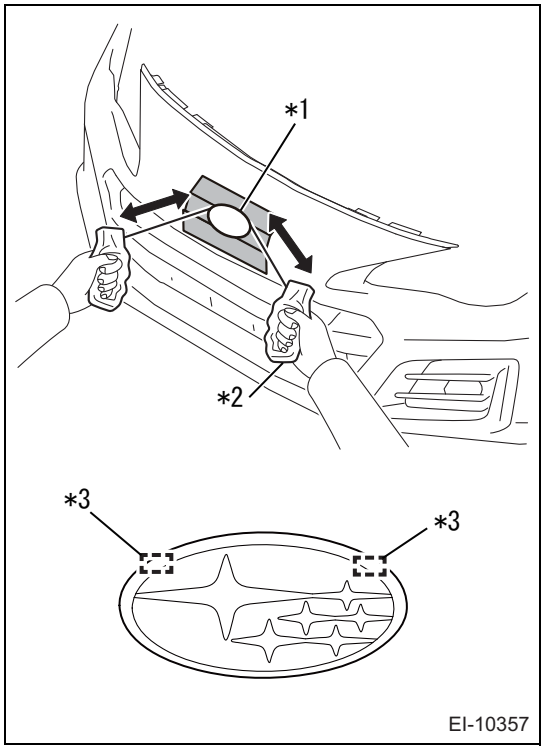

2. Removal of the front ornament emblem (Installed on the front side)
   (1) Apply protective tape around the front ornament emblem.

Captions in illustration

*1	Protective tape
*2	Winch
*3	Positioning pins

   (2) Using a heat light, heat up the front ornament emblem.
   WARNING:
   Be careful of burns from the heated body or the heat from the heat lamp.
   NOTE:
   Heat up for 3 to 5 minutes at 40 to 60°C {104 to 140°F}.
   (3) Set a piano wire to the winch.
   (4) Pull the piano wire both ways and cut the adhesive part of the acrylic foam tape.
   CAUTION:
   Be careful of the locations of the positioning pins.
   (5) Remove the push nut from the back side of the front bumper cover.
   (6) Remove the front ornament emblem.

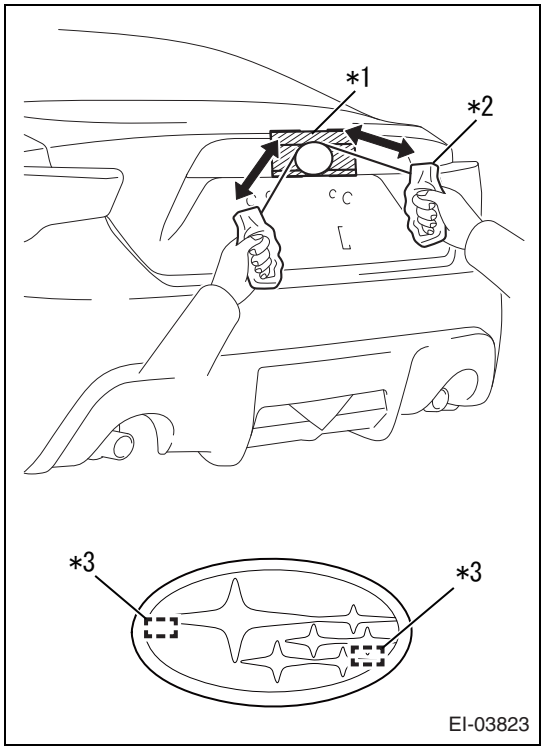

3. Removal of the rear ornament emblem (Installed on the rear side)
   (1) Apply protective tape around the rear ornament emblem.

Captions in illustration

*1	Protective tape
*2	Winch
*3	Positioning pins

   (2) Using a heat light, heat up the rear ornament emblem.
   WARNING:
   Be careful of burns from the heated body or the heat from the heat lamp.
   NOTE:
   Heat up for 3 to 5 minutes at 40 to 60°C {104 to 140°F}.
   (3) Set a piano wire to the winch.
   (4) Pull the piano wire both ways, cut the adhesive part of the acrylic foam tape, and remove the rear ornament emblem.
   CAUTION:
   Be careful of the locations of the positioning pins.

Installation

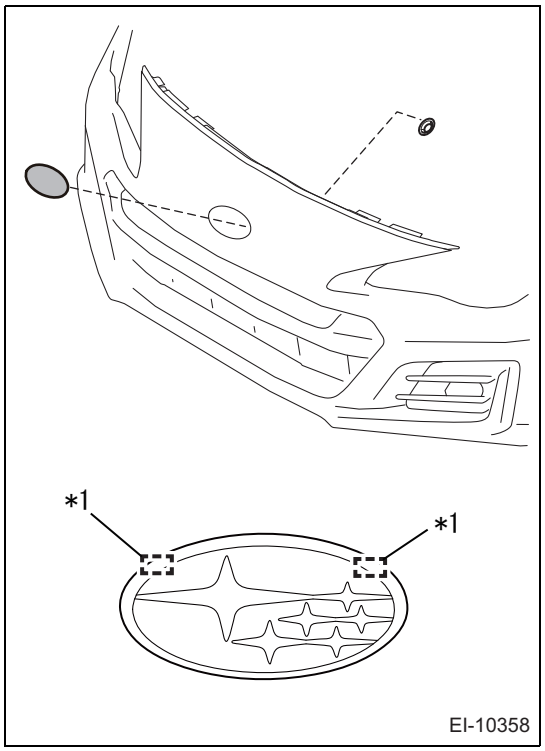

1. Installation of the front ornament emblem (Installed on the front side)
   (1) Cleaning the installation surface of the front ornament emblem
      (a)Remove any remaining acrylic foam tape on the front ornament emblem installation surface.
      (b)Degrease the installation surface of the front ornament emblem.
   (2) Using a heat light, heat up the new front ornament emblem and the vehicle installation surface.
      WARNING:
      Be careful of burns from the heated body or the heat from the heat lamp.
      NOTE:
      - Body side: 40 to 60°C (104 to 140°F)
      - Front ornament emblem side: 20 to 30°C {68 to 86°F}
   (3) Peel the backing sheet of the acrylic foam tape, avoiding touching the adhesive surface.
   (4) Align the positions of the positioning pins, and install the front ornament emblem.

Captions in illustration

*1	Positioning pins

NOTE:
Press the front ornament emblem firmly to install it.

   (5) Using a push nut, firmly secure the front ornament emblem.

2. Installation of the front bumper cover (Refer to ET - 12)

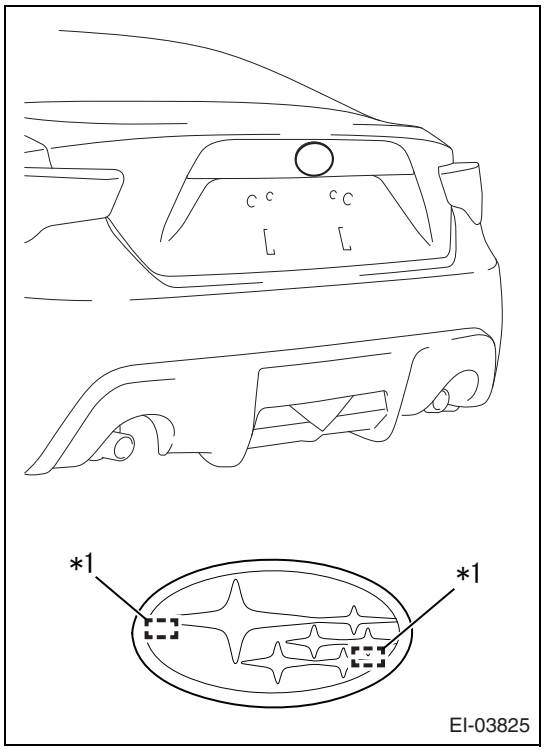

3. Installation of the rear ornament emblem (Installed on the rear side)
   (1) Cleaning the installation surface of the rear ornament emblem
      (a)Remove any remaining acrylic foam tape on the rear ornament emblem installation surface.
      (b)Degrease the installation surface of the rear ornament emblem.
   (2) Using a heat light, heat up the new rear ornament emblem and the vehicle installation surface.
      WARNING:
      Be careful of burns from the heated body or the heat from the heat lamp.
      NOTE:
      - Body side: 40 to 60°C (104 to 140°F)
      - Rear ornament emblem side: 20 to 30°C {68 to 86°F}
   (3) Peel the backing sheet of the acrylic foam tape, avoiding touching the adhesive surface.
   (4) Align the positions of the positioning pins, and install the rear ornament emblem.

Captions in illustration

*1	Positioning pins

NOTE:
Press the rear ornament emblem firmly to install it.

Front door weather strip

Exploded view

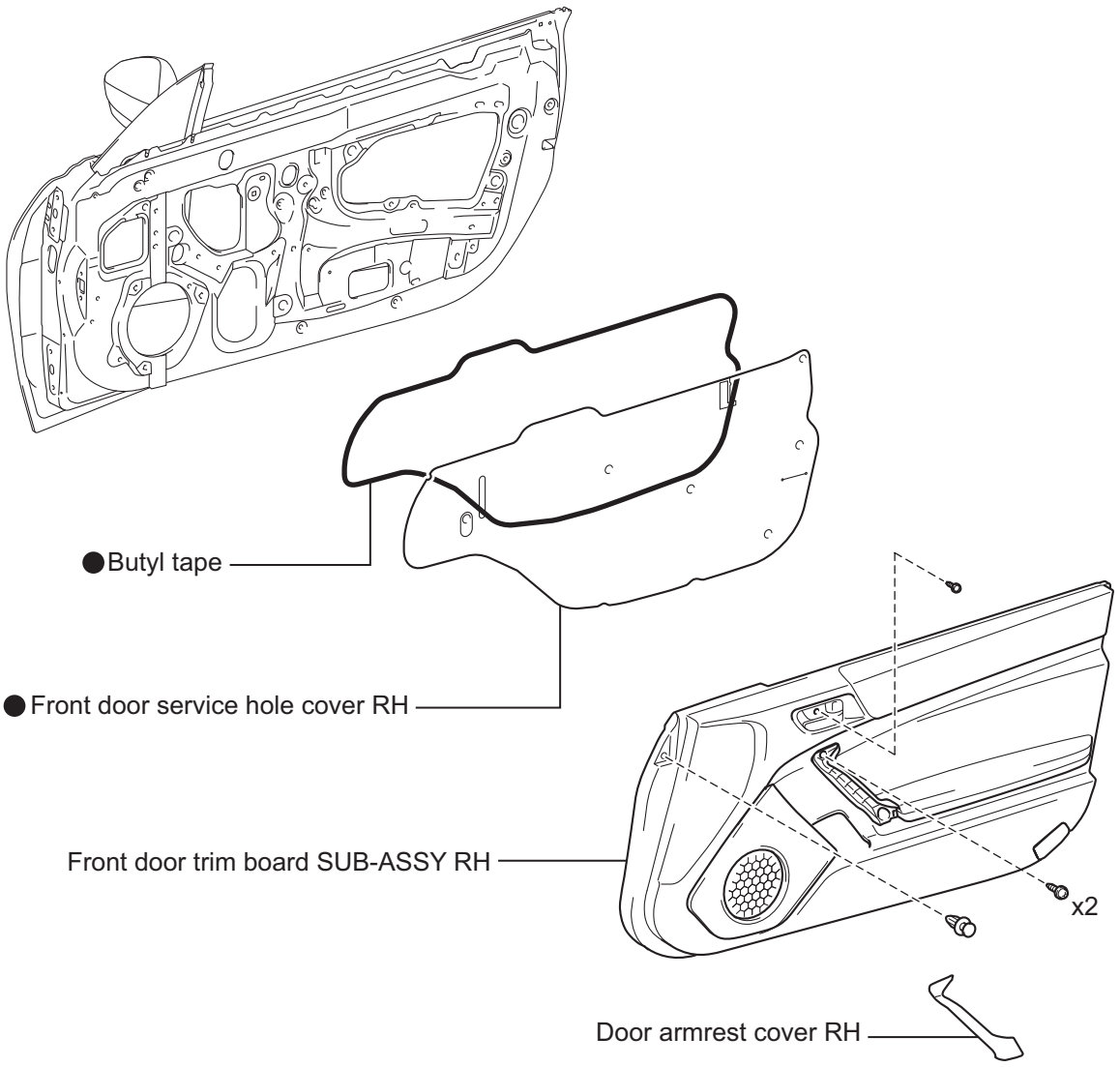

Passenger's door:	Driver's door:
 x4 Power window regulator switch ASSY w/ front armrest base panel UPR RH	 x4 Power window regulator master switch ASSY w/ front armrest base panel UPR LH

● Non-reusable part

EI-10414

ET

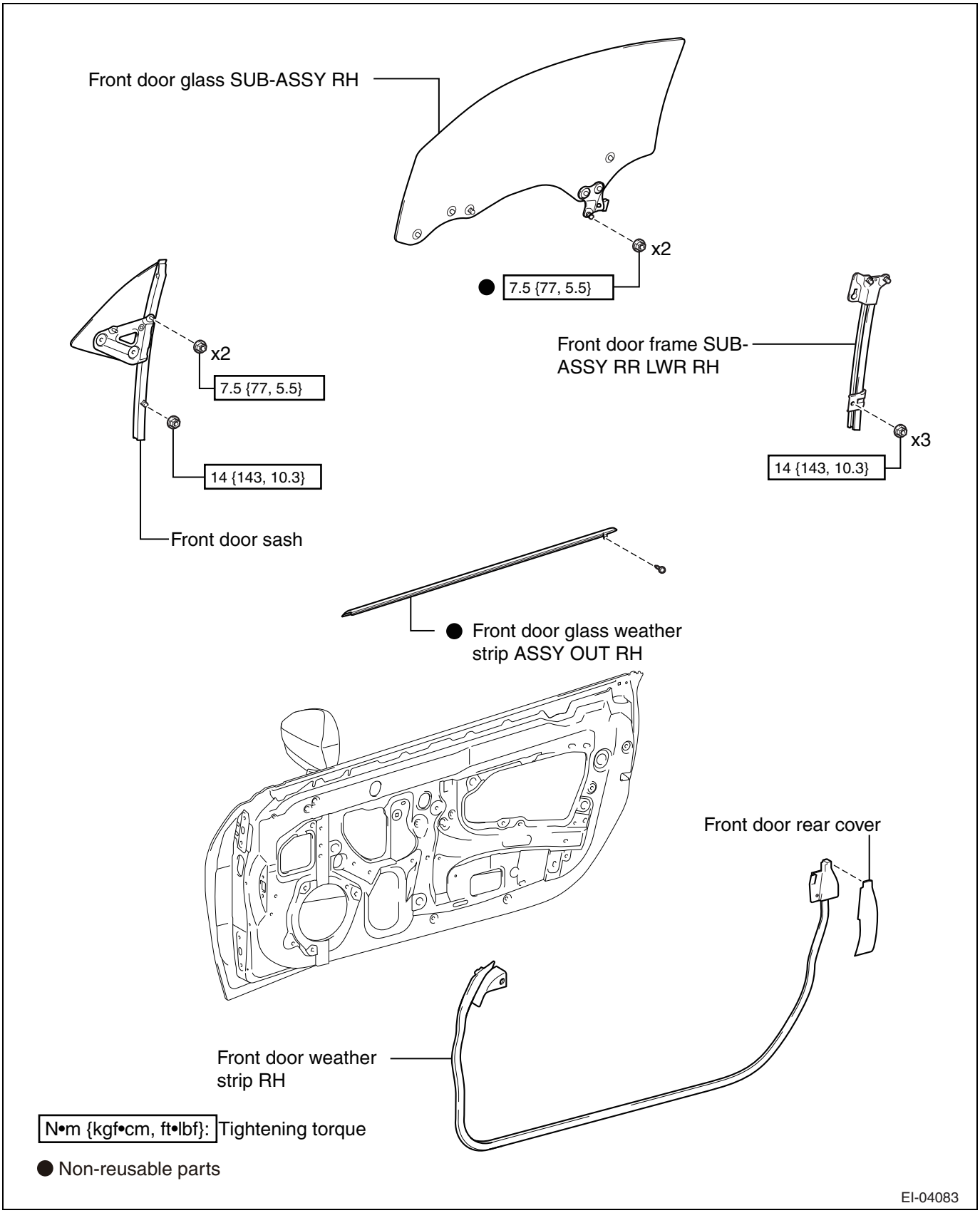

Removal

NOTE:

The procedures described below are for the RH side. Unless otherwise specified, perform the same procedures for the LH and RH sides.

1. Fully open the front door glass.
2. Disconnection of the battery ground terminal (Refer to BH - 31)
3. Removal of the door arm rest cover RH (Refer to DH - 32)
4. Removal of the front door trim board SUB-ASSY RH (Refer to DH - 32)
5. Removal of the front door glass weather strip ASSY OUT RH

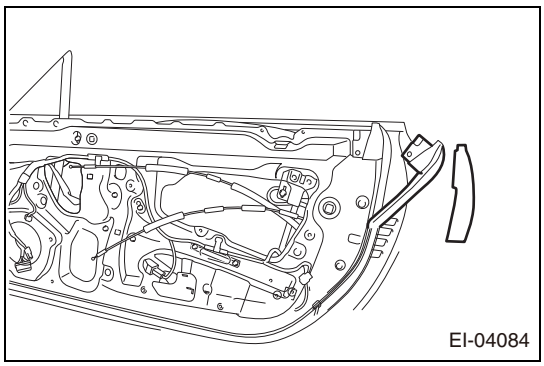

(1) Remove the front door rear cover RH.

(2) Turn over the rear end of the front door weather strip so that the front glass SUB-ASSY RH can be removed.

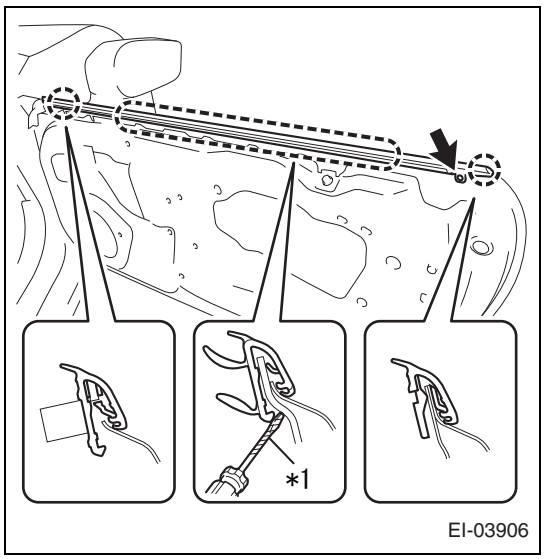

(3) Remove the screw.

(4) Using a flat head screw driver wrapped in protective tape, release the tabs, and remove the front door glass weather strip ASSY OUT RH.

Captions in illustration

*1	Protective tape

Installation

NOTE:

The procedures described below are for the RH side. Unless otherwise specified, perform the same procedures for the LH and RH sides.

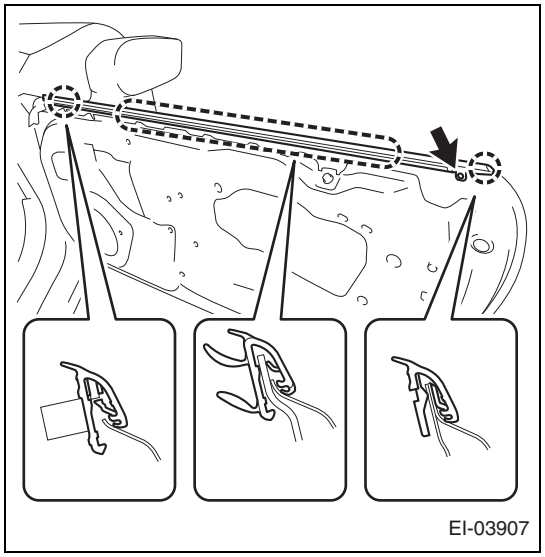

1. Installation of the front door glass weather strip ASSY OUT RH
   (1) Fit in the tabs, and install the new front door glass weather strip ASSY OUT RH.
   (2) Install the screw.
   (3) Install the front door weather strip RH.
   (4) Install the front door rear cover RH.
2. Installation of the front door trim board SUB-ASSY RH (driver's door) (Refer to DH - 52)
3. Installation of the door arm rest cover RH (Refer to DH - 54)
4. Connection of the battery ground terminal
   Standard value:T=6.0N·m {61kgf·cm} {4.4ft·lbf}
5. Settings when removing/installing battery terminals (Refer to IN - 6)
6. Power window registration settings (Refer to WS - 5)
7. Function inspection of the power windows (Refer to WS - 59)

Roof drip side finish molding

Exploded view

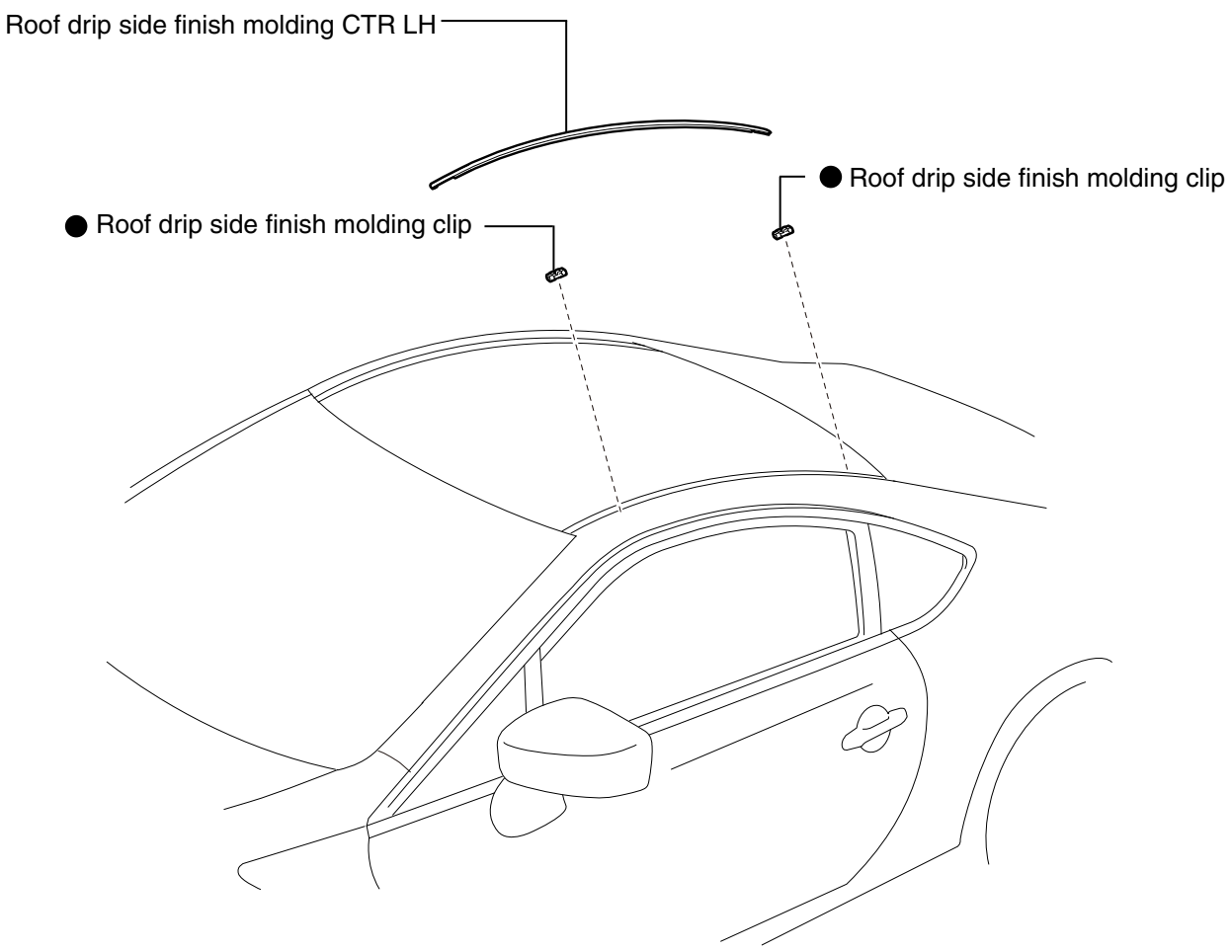

● Non-reusable parts

T

Removal

NOTE:

The following procedure is for LH side. Perform the same procedures for the RH and LH side.

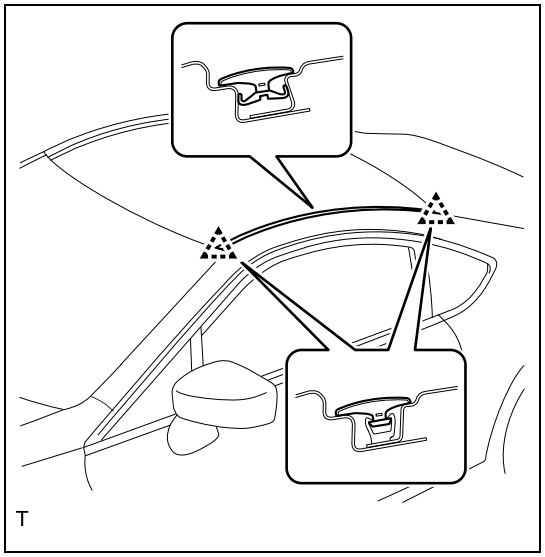
T

1. Removal of the roof drip side finish molding CTR LH
   (1) Release the 2 clips, and remove the roof drip side finish molding CTR LH.
   CAUTION:
   - Do not remove the roof drip side finish molding clip.
   - If the roof drip side finish molding clip is damaged, replace it with a spare roof drip side finish molding clip.

Installation

NOTE:

The following procedure is for LH side. Perform the same procedures for the RH and LH side.

1. Replacement of the roof drip side finish molding clip
   CAUTION:
   - When installing the roof drip side finish molding clip, peel off any double-sided tape remaining on the body installation surface, and clean the body side.
   - The primer for use is included in the 3M DP-100. (It is described as having primer, but because it is a 2-liquid type adhesive, don't let the primer dry)

   NOTE:

   Because it is a 2-liquid type adhesive, after mixing the 2 liquids in a separate container, it is possible to apply to the adhesive surface and attach.

   (1) Using an industrial dryer, loosen the roof drip side finish molding clip.
   CAUTION:
   In cases where the hot air from the dryer might cause discoloration in the paint, use a dryer with a narrow tip diameter.
   (2) While blowing hot air on it, remove the roof drip side finish molding clip with needle-nose pliers or something similar.
   CAUTION:
   Do not damage the painted surface with the edge of the roof drip side finish molding clip.
   (3) While blowing hot air from the dryer on the tape left on the body, use a bamboo paddle or something similar to remove the tape.
   (4) Clean the area from which the tape has been removed.
   (5) Apply 3M DP-100 to a mat board, and mix the 2 liquids.

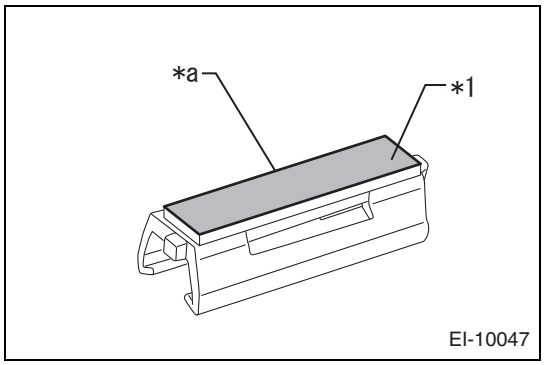

EI-10047

   (6) Uniformly apply 0.5 mm of the mixed 3M DP-100 on the new roof drip side finish molding clip.

Captions in illustration

*1	Mixed 3M DP-100
*a	Uniformly apply 0.5 mm

   CAUTION:
   When the sealant was applied during body repair, level the sealant in the vicinity of the clip installation area.

   (7) Use the accessory brush to apply the primer to the body where the roof drip side finish molding clip is installed.
   CAUTION:
   Do not let the primer dry.
   (8) Press the 2 roof drip side finish molding clips firmly to install them.

(9) Reference the position in the figure, then immediately after applying primer, apply the clip to the roof panel, and make it so that they lightly rub together. After the adhesive and the primer have been blended, set the positioning, and press firmly.

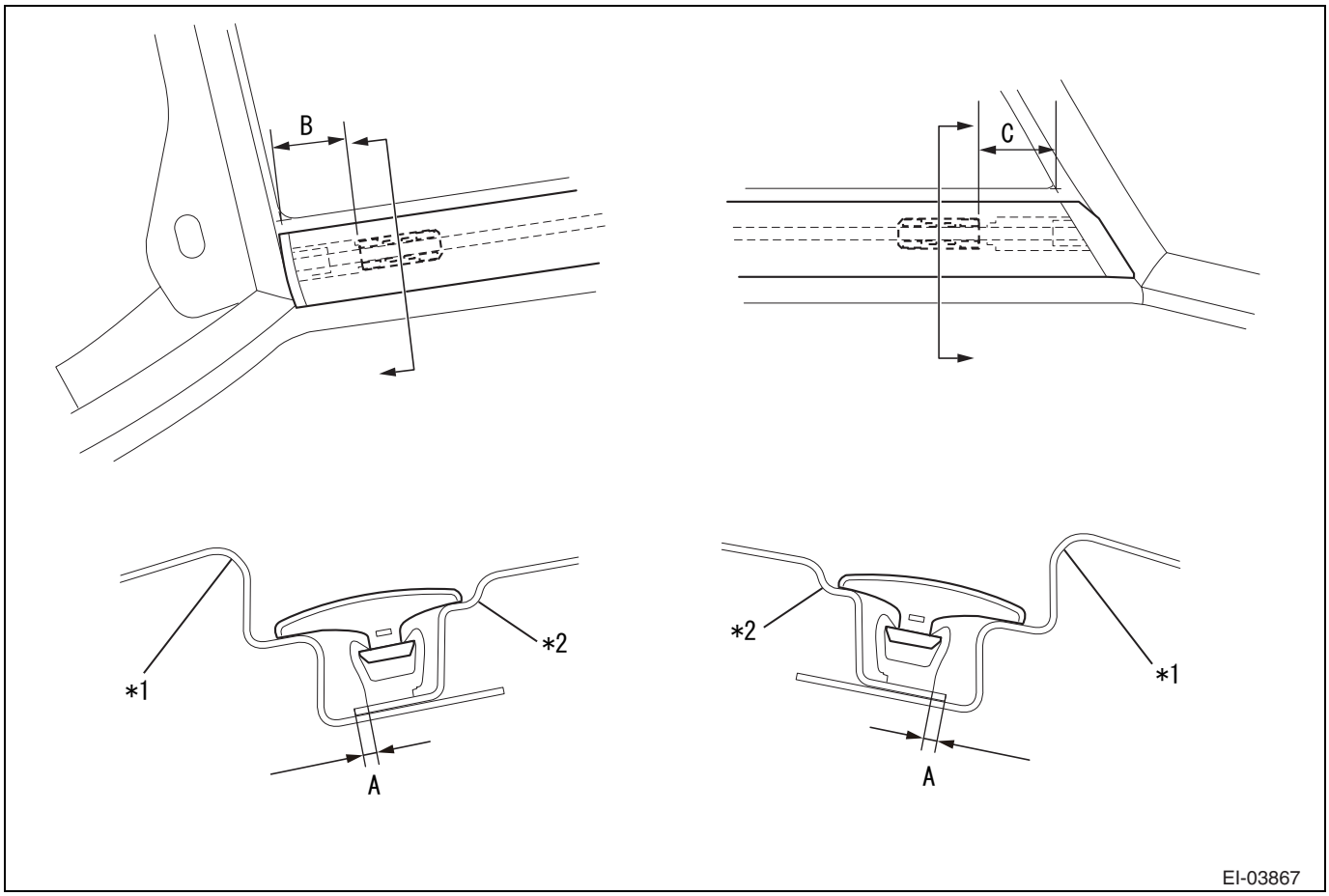

Captions in illustration

*1	Outer side panel	*2	Roof panel

Standard installation location

Part	Criteria
A	2.0 mm
B	20.6 mm
C	26.5 mm

(10) The installation of the roof drip side finish molding CTR LH is performed once 40 minutes or more have passed since application.

NOTE:

- Initial hardening time- 40 minutes
- Complete hardening time- 24 hours

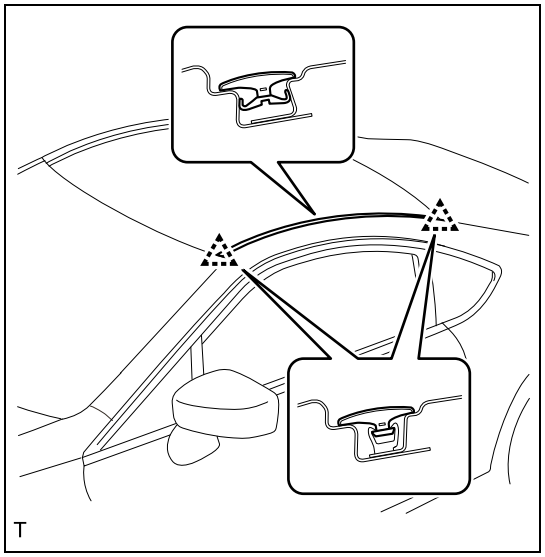

2. Installation of the roof drip side finish molding CTR LH
   (1) Fit in the front clip, and temporarily install the roof drip side finish molding CTR LH.
   (2) While pushing the roof drip side finish molding CTR LH towards the body, install it.
   (3) Fit in the rear clip, and install the roof drip side finish molding CTR LH.

Front fender garnish

Exploded view

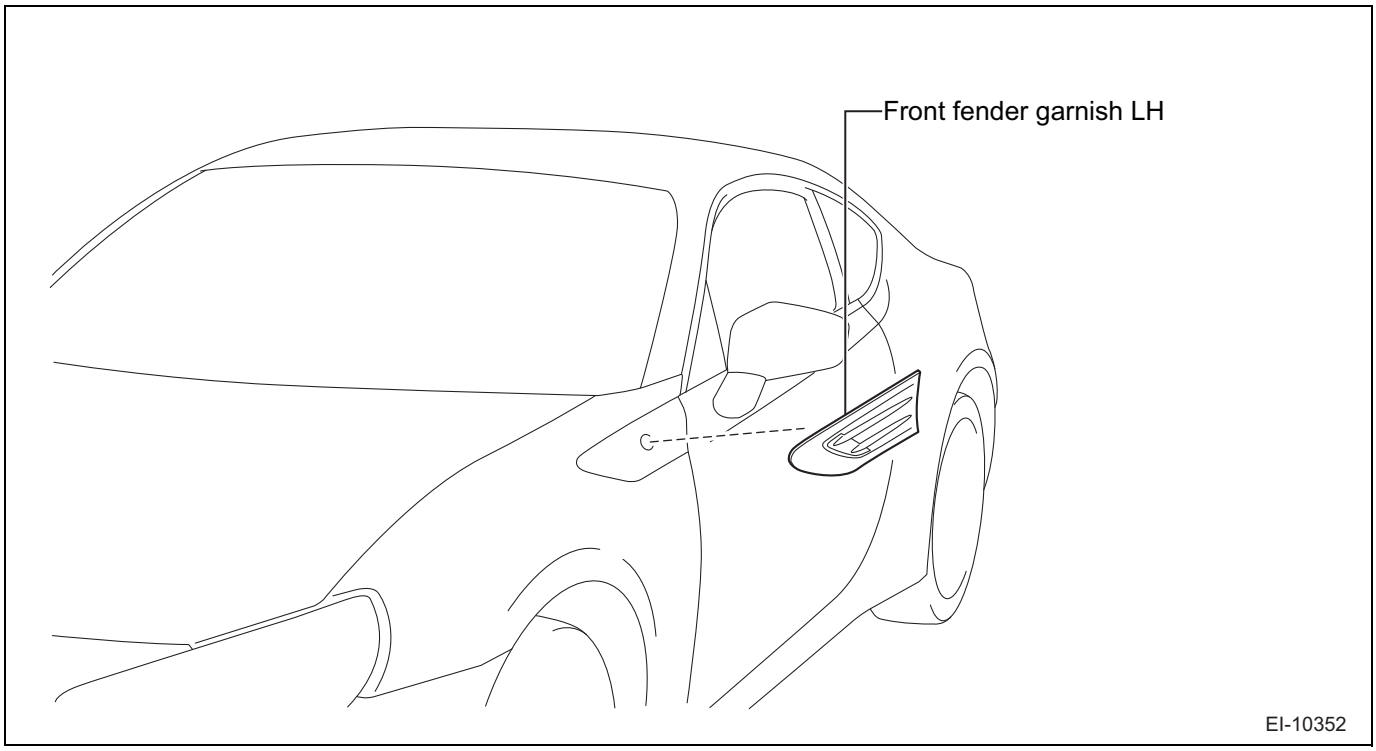

Removal

NOTE:

The following procedure is for LH side. Perform the same procedures for the RH and LH side.

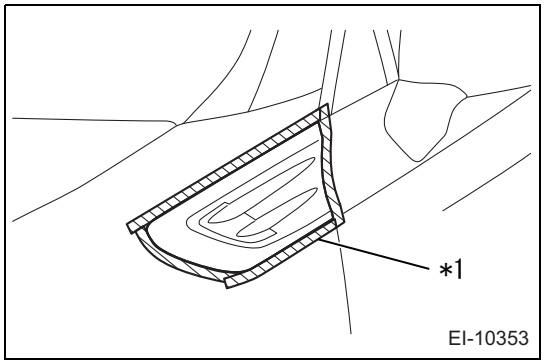

1. Removal of front fender garnish LH
   (1) Apply protective tape around the front fender garnish LH.
   (2) Using a heat light, heat up the front fender garnish LH.
   CAUTION:
   Be careful of burns from the heated body or the heat from the heat lamp.
   NOTE:
   3 to 5 minutes at 40 to 60°C {104 to 140°F}

Captions in illustration

*1	Protective tape

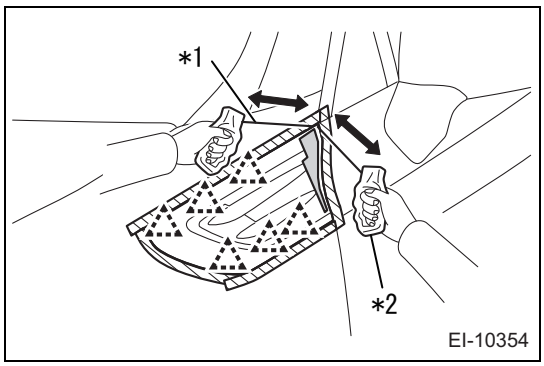

   (3) Set a piano wire to the winch.
   (4) Pull the piano wire both ways and cut the adhesive part of the double-sided tape.
   CAUTION:
   Pay attention to the clip position of the front fender garnish LH.

Captions in illustration

*1	Piano wire
*2	Winch

ET

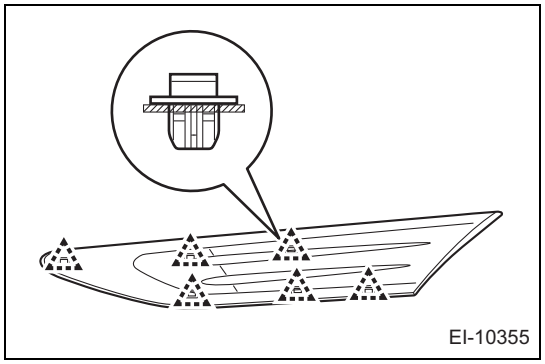

(5) Using a molding remover, remove the 6 clips and remove the front fender garnish LH.

Installation

NOTE:

The following procedure is for LH side. Perform the same procedures for the RH and LH side.

1. Cleaning of the body installation surface
   (1) Using a cloth, rub off any double-sided tape remaining on the body.
   CAUTION:
   If you install the front fender garnish with double-sided tape remaining, it can cause poor adhesion, so be sure to fully remove it.
   (2) Clean the adhesive surface.
2. Installation of front fender garnish LH
   (1) Cleaning of front fender garnish LH installation surface (when reusing front fender garnish)
   (a)Using a cloth, rub off any double-sided tape remaining on the front fender garnish LH.
   (b)Clean the adhesive surface.

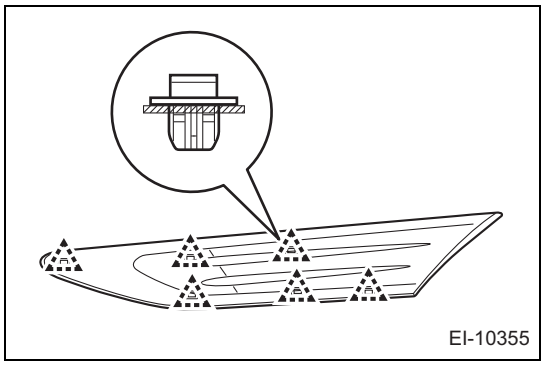

(2) Using a heat light, heat up the front fender garnish LH and the vehicle installation surface.
CAUTION:
Be careful of burns from the heated body or the heat from the heat lamp.
NOTE:
- Heat up the body side to 40 to 60°C {104 to 140°F}
- Heat up the front fender garnish side to 20 to 30°C {68 to 86°F}.

(3) Apply primer to installation surfaces of the front fender garnish LH.
CAUTION:
Do not apply the primer thickly.
(4) After the primer has dried, peel the backing sheet of the double-sided tape, and apply the double-sided tape to the installation surface of the front fender garnish LH.
CAUTION:
Be careful not to touch the adhesive surface.
(5) Peel the backing sheet of the double-sided tape, and engage the 6 clips, and then install the front fender garnish LH.
CAUTION:
- Press the front fender garnish LH firmly to install it.
- Confirm that a gasket is attached to each clip.

Trunk garnish

Exploded view

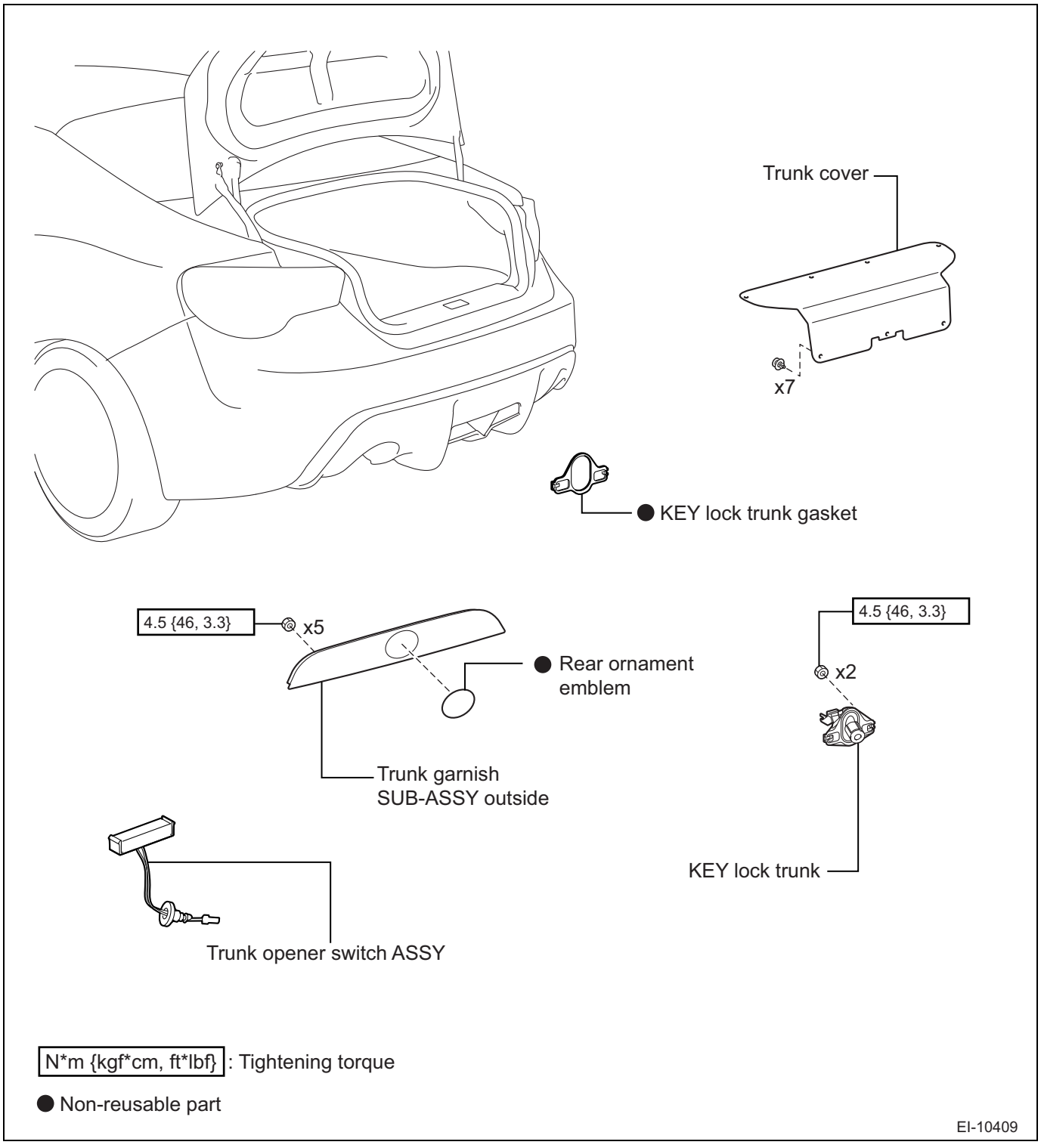

Removal

1. Removal of trunk cover (Refer to DH - 61)
2. Removal of key lock trunk (Refer to DL - 107)

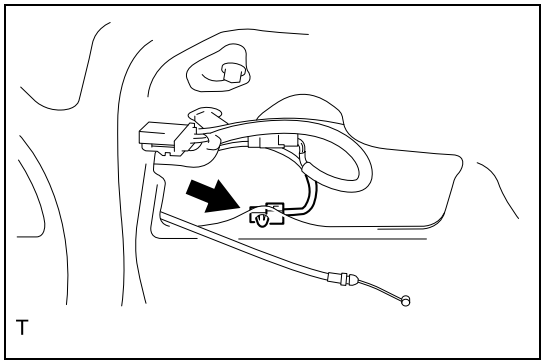

3. Removal of trunk garnish SUB-ASSY outside
   (1) Disconnect the connector for the trunk opener switch ASSY.
   (2) Remove the grommet for the trunk opener switch ASSY.

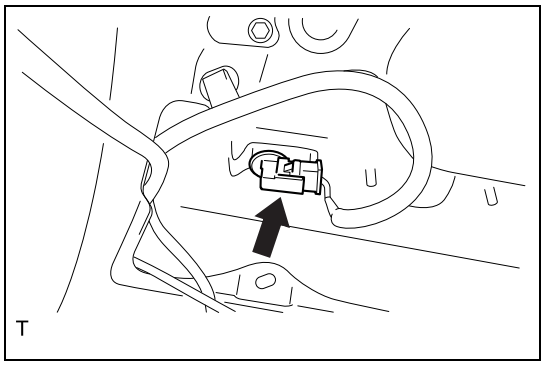

   (3) Disconnect the connector of the license plate light RH side.
   (4) Disconnect on the LH side using the same steps as the RH side.

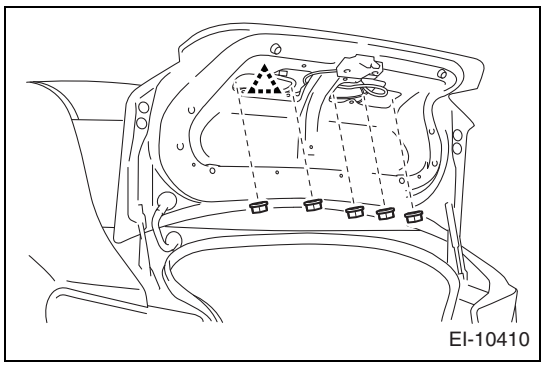

   (5) Remove the 5 nuts.
   (6) Remove the clip, and remove the trunk garnish SUB-ASSY outside.

4. Removal of the trunk opener switch ASSY (Refer to DH - 71)
5. Removal of the rear ornament emblem (installed on the rear) (Refer to ET - 39)

Installation

1. Installation of the rear ornament emblem (installed on the rear) (Refer to ET - 40)
2. Installation of the trunk opener switch ASSY (Refer to DH - 71)
3. Installation of the trunk garnish SUB-ASSY outside
   (1) Using the 5 nuts and the clip, install the trunk garnish SUB-ASSY outside.
   Standard value:T=4.5N·m {46kgf·cm} {3.3ft·lbf}
   (2) Connect the 2 license plate light connectors.
   (3) Connect the connector for the trunk opener switch ASSY.
4. Installation of key lock trunk (Refer to DL - 107)
5. Installation of trunk cover (Refer to DH - 62)